Element D - Design Concept Generation, Analysis, and Selection

Design Idea Generation (D1, D4)

Project Title: MJ's LAST Stand (Echo Rack)

Design Ideas #1:

Description: This gong stand, although simple, was created with cost and material efficiency in mind. The design's dimensions and overall style are mostly based on the gong stand currently in use in the ERHS band, however, there are a number of significant changes. The thickness of the various structural bars are not thin steel metal, but 1x1 wood lumber. There are two new bars that connect to the superstructure of the structure at a 90° angle to prevent the vertical supports from bending. Unlike the current gong stand which has two hooks within the center of the top crossbar for the gong's string to hold onto, this design has three hooks: one in the center and two further out. The idea behind is that since the hooks are more spread out and closer to the vertical supports of the gong stand, the load inflicted upon the structure will also be more spread out and distributed more efficiently to the vertical supports. This may mean there is no need for further trusses to support the top bar. At the bottom of the stand, there are four free-spinning, locking caster wheels; great for movement, useful once set up on stage.

[Dimensions are described in the following drawings]

Drawings:

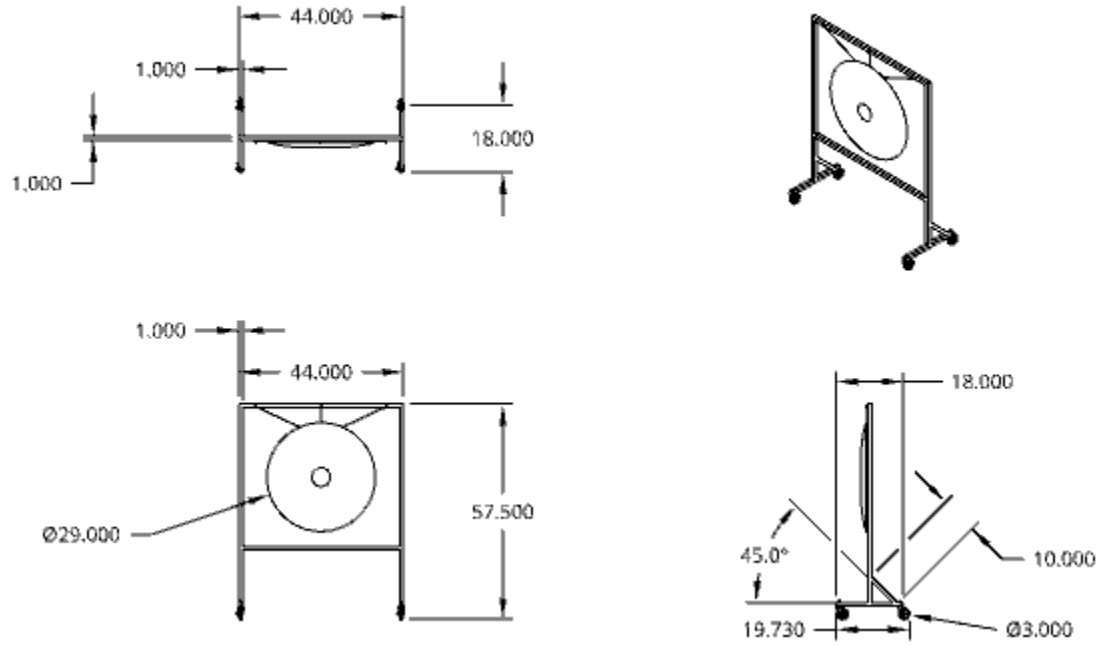

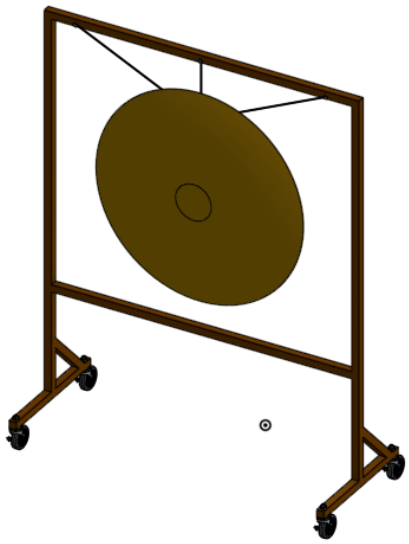

Build Procedure:
(Will be mainly built with woodworking tools, screws/nuts, hand tools, lumber, and a bit of metal)

1. Cut 1x1 wood lumber down to required length for the various parts of the gong: 2 x 18in, 2 x 10in (corners cut at a 45° angle), 2 x 42 in, 2 x 53 in.
2. Connect lumber according to the model
3. Connect the 3 hooks and 4 wheels

Materials:

1. 1x1 in wood lumber: about $50
2. 4 caster wheels: about $36
3. Some Metal: about $10 (or maybe free)
4. Screws and Nuts: $10

Design Idea #2
Description: This is a 3d gong created with wood, foam and wheels. The gong has a pedal when pressed which lowers the foam on the gong and will -press against it causing the vibrations to stop. The gong also has wheels which will allow the band to safely and effectively transport the gong from place to place. The gong is made out of wood which will be sturdy enough to carry the weight of the gong.
Drawing:

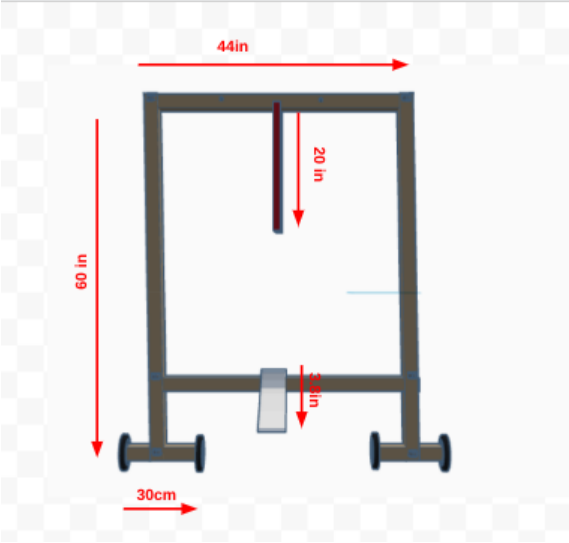
44in
20 in
60 in
30cm

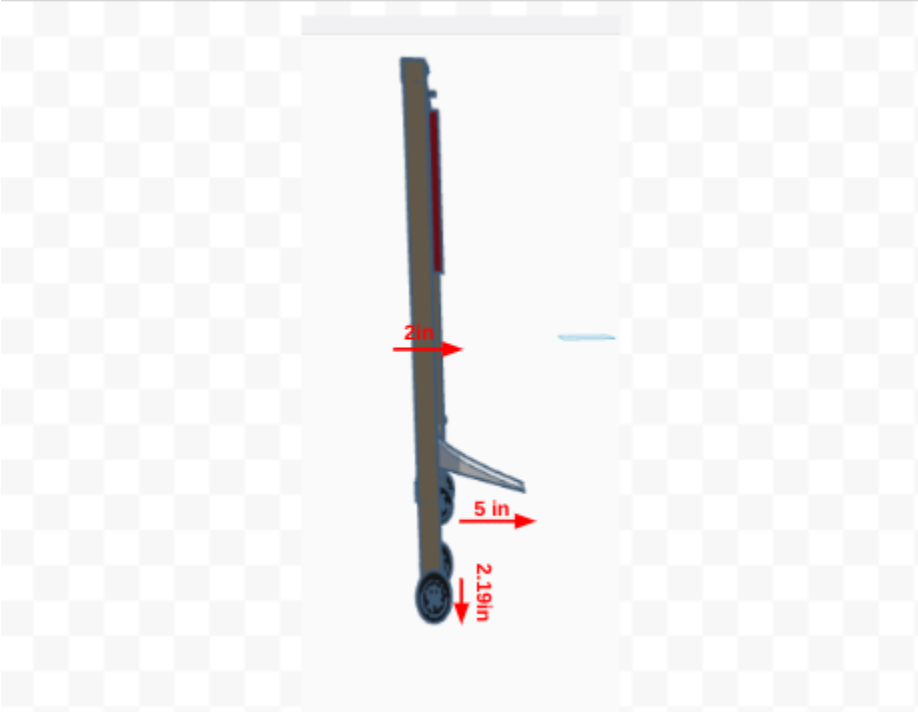
2in
5 in
2.19in

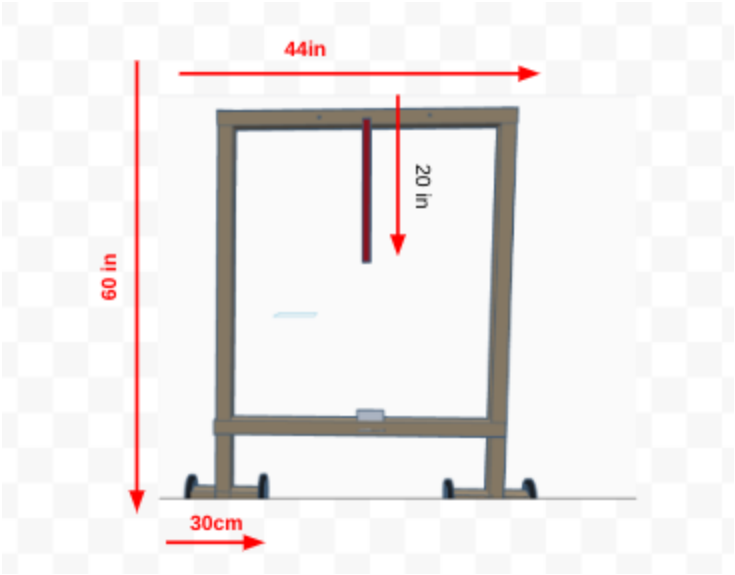

Design Idea #3
Description: A 3d gong stand with a wooden frame, two legs, a rack for the gong stand to be attached to a wooden mallet to hit the gong which makes the music. It's thick enough to still properly carry the weight of the gong stand even though it's made of wood.

Dimensions:
Height: 2.5 Ft
Length: 3 ft
Width: 1.5-2ft

Drawing:

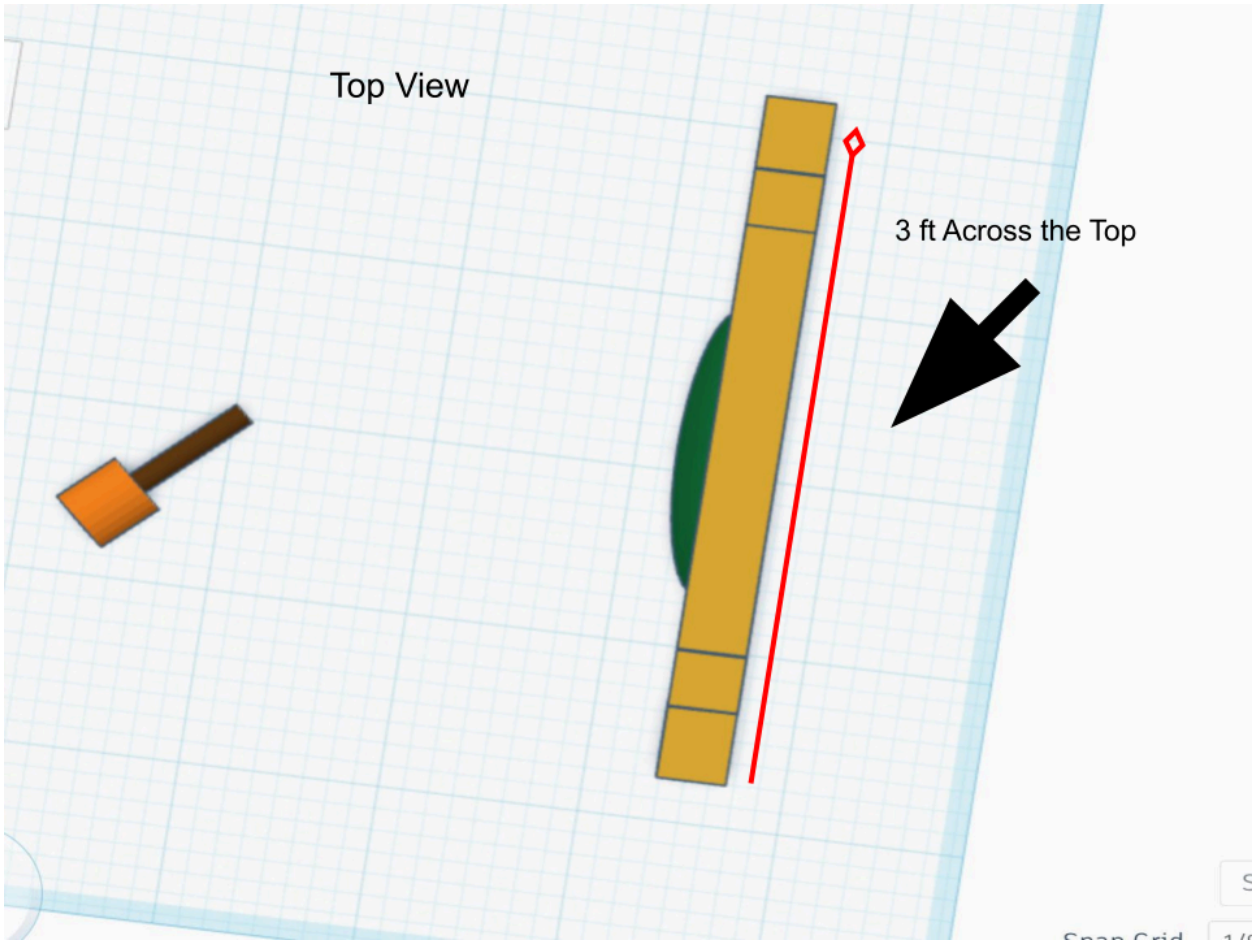
Top View
3 ft Across the Top

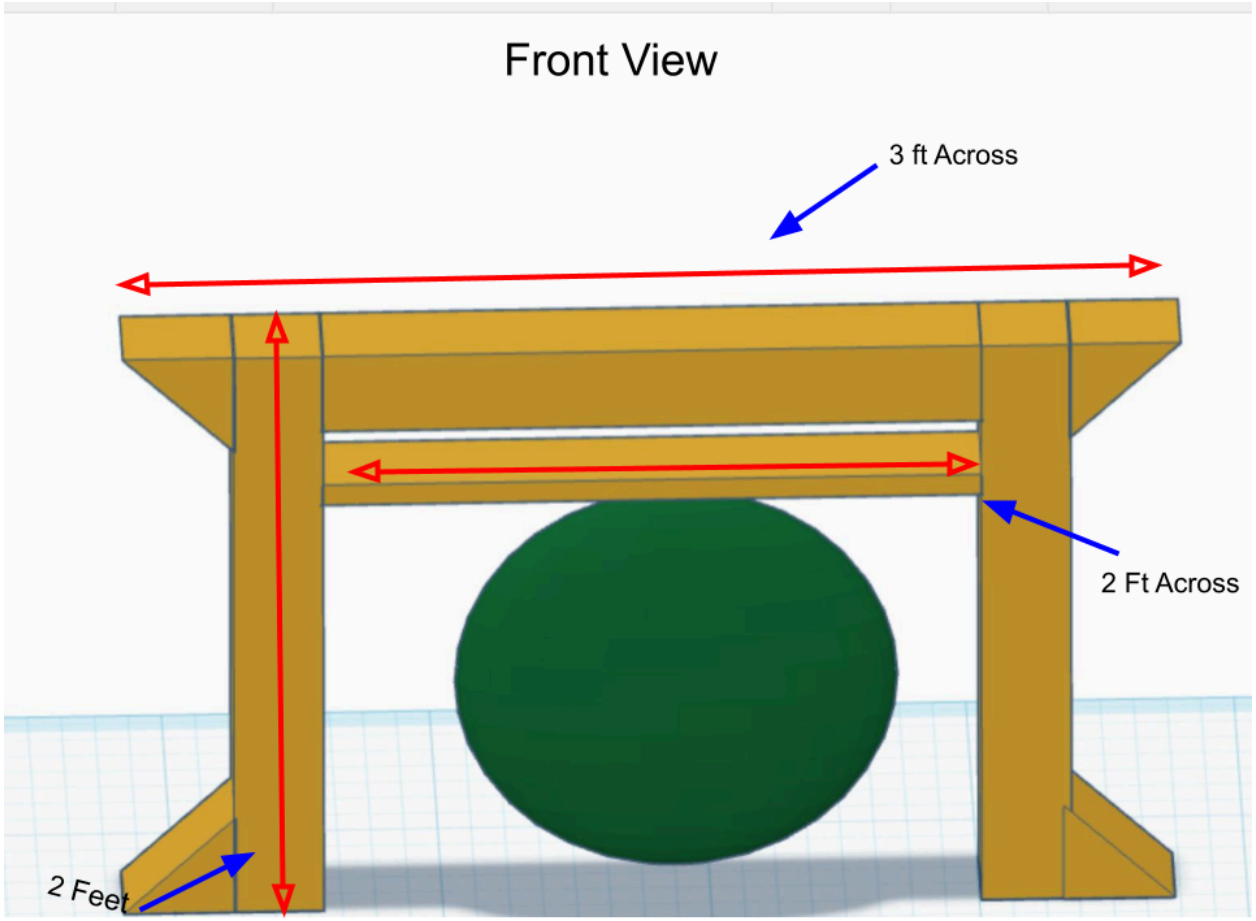
Front View
3 ft Across
2 Ft Across
2 Feet

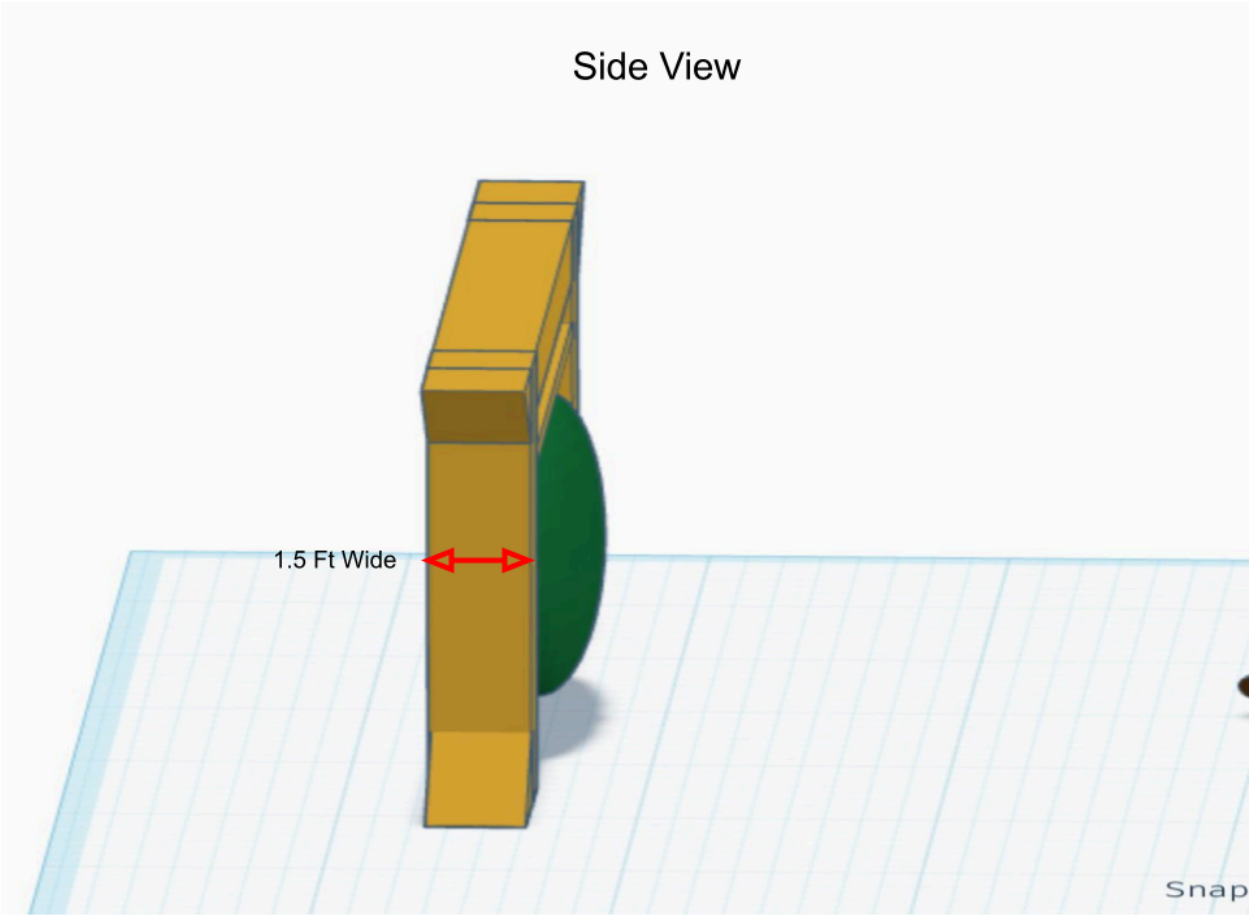
Side View
1.5 Ft Wide
Snap

Design Idea #4

Description: My idea focuses a lot on the structural elements of the gong stand because that was the biggest issue we faced with our previous one. I also focused a lot on structure because I'm not sure how well the wood will hold together without much support. Metal is difficult to bend (usually) so we would not have to worry about it bending and breaking for a while, however, we do not have access to metal. I also made this design roughly the same size as our other one to make sure it would still fit through the same doors and gaps that our other one would. I also added a gong mute pedal which you can push down to release clamping arms to let the gong ring. It's a first design and will likely need improvement, but the idea is still there and would likely function anyway.

Drawing:

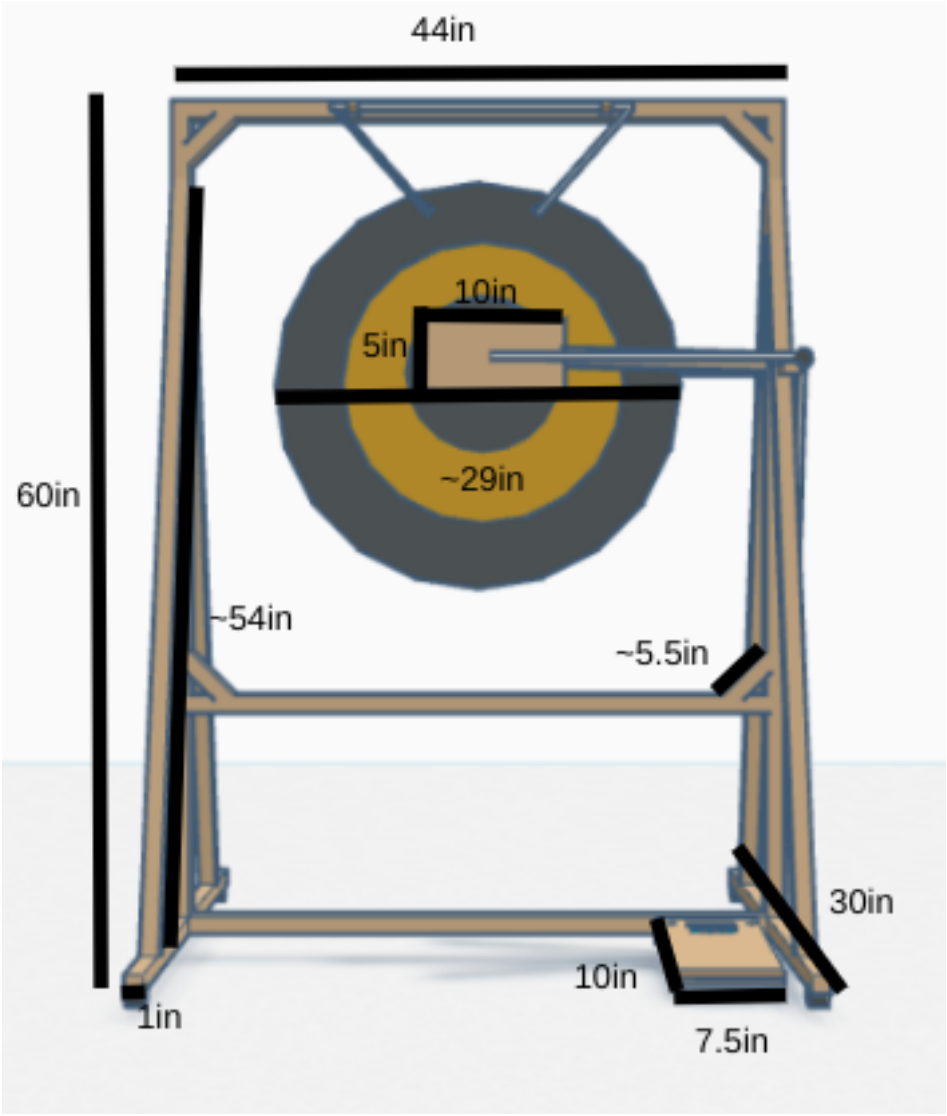

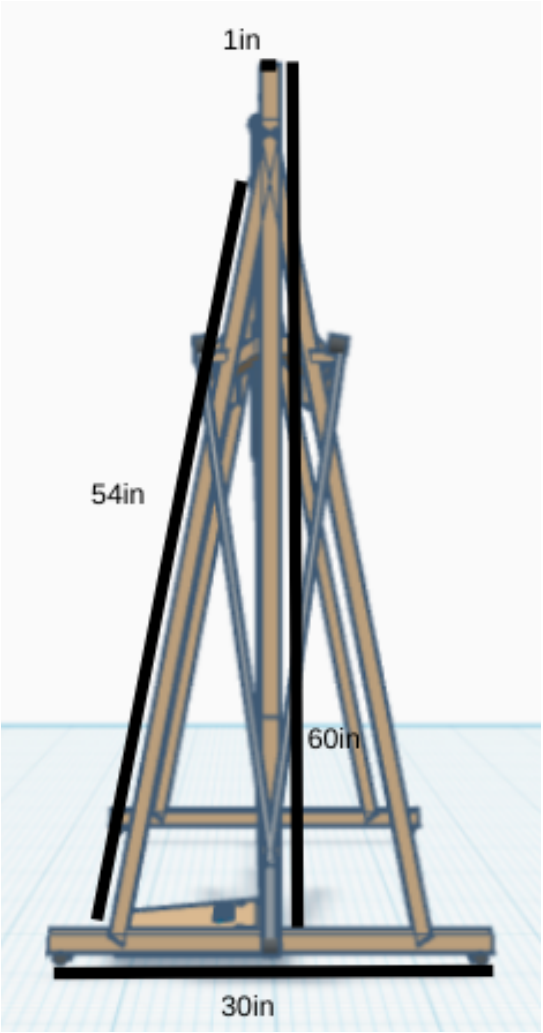

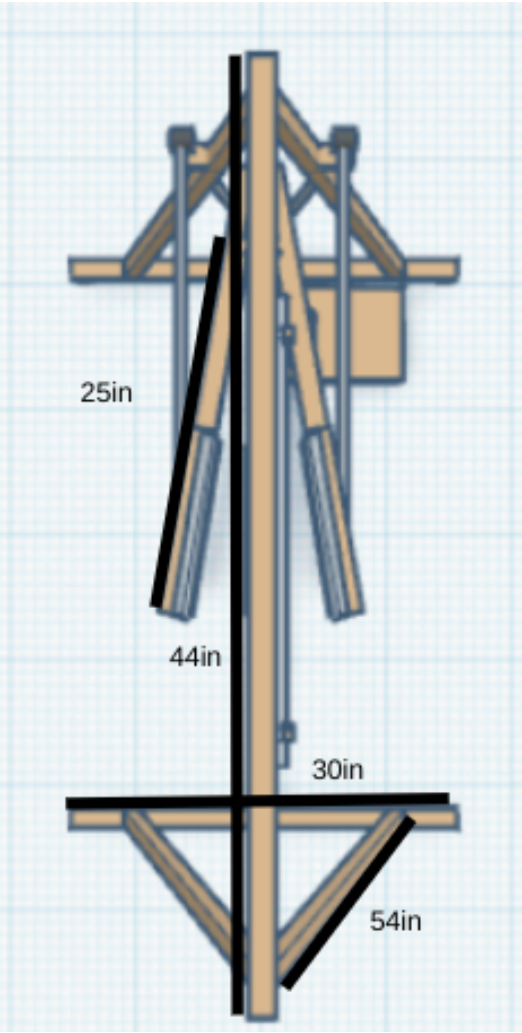

Manufacturing Methods:

- **Step 1: Acquire Materials (home depot field trip)**
- **Step 2: Measure and Cut Wood (probably at home)**
- **Step 3: Assemble and Test**

Materials:

- **Swivel Wheels; ~$20**
- **1x1x? Wood; ~$50**
- **Screws; ~$10 (for a big pack)**
    - **Total: ~$80**

Criteria	Weight	#1	#2	#3	#4
Hold Weight	25%	1	4	4	5
Balance	10%	2	5	5	5
Aesthetics	25%	4	4	4	3
Sound Silencing	15%	2	3	2	4
Low Cost	15%	5	2	4	2
Feasibility	5%	2	5	4	4
Environmentally Friendly	5%	5	3	4	4
Score		3.00	3.7	3.86	3.89

Task	Start Date	End Date	Duration	Materials	Tools/Equipment	Status
Project Kickoff	1/30	2/7	8 Days	None	Computer	Complete
Requirements Gathering	3/5	3/6	2 days	Stakeholder feedback/interview, project specifications	Computer (Google Docs)	Complete
Conceptual Design	3/7	3/9	3 days	Tinkercad, Onshape	Computer - Docs - CAD	In Progress
Preliminary Engineering	TBD	TBD	TBD	Material samples, initial design data	Computer - Docs - CAD Paper & Pencil	Not Started
Detailed Engineering	TBD	TBD	TBD	CAD Files, component	CAD Software	Not Started

				specifications		
Prototype Fabrication	TBD	TBD	TBD	Raw materials (wood)	Powerhack saw Drills	Not Started
Testing & Validation	TBD	TBD	TBD	Prototype, testing equipment	Hammer Computer/Phone Gong Mallet	Not Started
Final Adjustments	TBD	TBD	TBD	Protoype, adjustment materials	Hammer Screw-driver String Etc…	Not Started
Project Review & Closure	TBD	TBD	TBD	Completed Gong stand	Computer Review Checklist	Not Started

Item	Cost Each	# Needed	Total
1inx1in 60 inWood	$15	9	$135
Swivel Wheels	$15	1 (for a set of 4)	$15
Screws	$15	1 (for a large pack)	$15
Total Cost	—	—	$165