TOKAI AOH-501-1000 AUTOMATIC BOLLARDS

PRODUCT OVERVIEW

Tokai AOH-501-1000 are designed and manufactured according to 7,200kg/48KmH (M30/K4/640 kilo-joule) security impact rating standard. Cylinder material is 304/316 stainless steel or Q235 steel with RAL color powder coated for customer selections. Intercept height 800mm, diameter 271mm/273mm (sleeved) and thickness 10mm with 4-6s fast rising speed.

Automatic rising bollard is suitable for high-frequency, high security vehicle access sites. Especially for the government buildings, airports, military bases, nuclear power station etc.

AVAILABLE ITEMS

- Automatic Bollards Series Stainless Steel 304/316
- Q235 Steel with RAL Color Powder Coated
- Kit Head With LED Lamp Band
- One Kit for Each Bollard
- Remote Radio Receiver as optional
- PLC Controller with Provision of Open Source Protocol

SPECIFICATIONS

Product Dimension	ϕ470 x H1360mm
Cylinder Material	304/316 stainless steel, Q235 steel with RAL colour powder coated
Cylinder Diameter	271mm/273mm (Sleeved)
Cylinder Intercept Height	800mm
Cylinder Thickness	10mm
Flange Diameter	470mm
Flange Thickness	58mm
Cylinder underground Depth	1360mm
Cylinder underground Diameter	377mm
Movement Principle	Hydraulic driving
Cylinder Stainless Steel Finish	Brushed
Reflecting Adhesive Strip	Yes, 3M brand, Optional colors, Customized LOGO
Emergency Lowering If Power Fails	Yes
Safety Reversal Pressure Switch	Optional
LED Light	Yes
Type of Use	Intensive
Life Units	10 years

IP Rating	IP68
Rising Time	4-6s
Lifting Force	300kg
Operating Temperature	-40ºC ~ +70ºC
Heating Unit	Optional
Overheating Protection	+120ºC
Oil Tank Capacity	1L
Power Supply	AC380V / AC220V
Power Consumption	300W

Control Cabinet Dimension	500mmL x 200mmW x 600mmH
Finish	Outdoor Spray Paint
Self-Testing Program	Yes
Emergency Lowering	Yes
Remote Control Distance	100 meters
Communication Signal	Optional RS-232, RS-485, Ethernet
Air Leakage Switch	Yes, CHNT brand
Power Supply	AC380V / AC220V
Control Voltage	DC12V, Mean Well brand
Optional PLC Controller Linkage Work	Vehicle Identifications, traffic light, inductive detector loop, and other access control equipment

DIMENSIONS

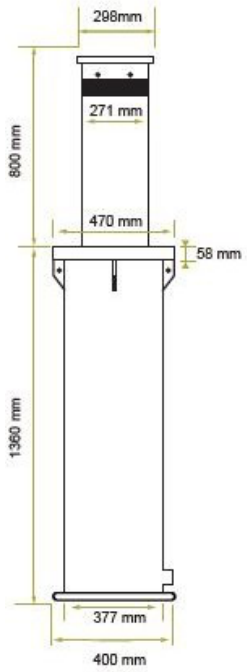

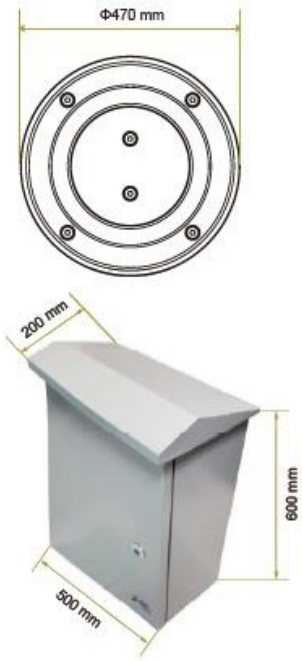

HYDRAULIC ACTUATOR

Low temperature sensitivity

No fear of any harsh environment

PLC CONTROL SYSTEM

Waterproof design

Widely integration usage

Programmable Logic Controller

RELATED COMPONENTS

Bollards

Control Box

Remote Control

Tokai Engineering (M) Sdn Bhd | Lot 14 Jalan Astaka U8/82| Seksyen U8 Bukit Jelutong | 40150 Shah Alam | Selangor Malaysia
Tel: +603-7845 2323 | Email: sales@tokai.com.my | Website: www.tokai.com.my