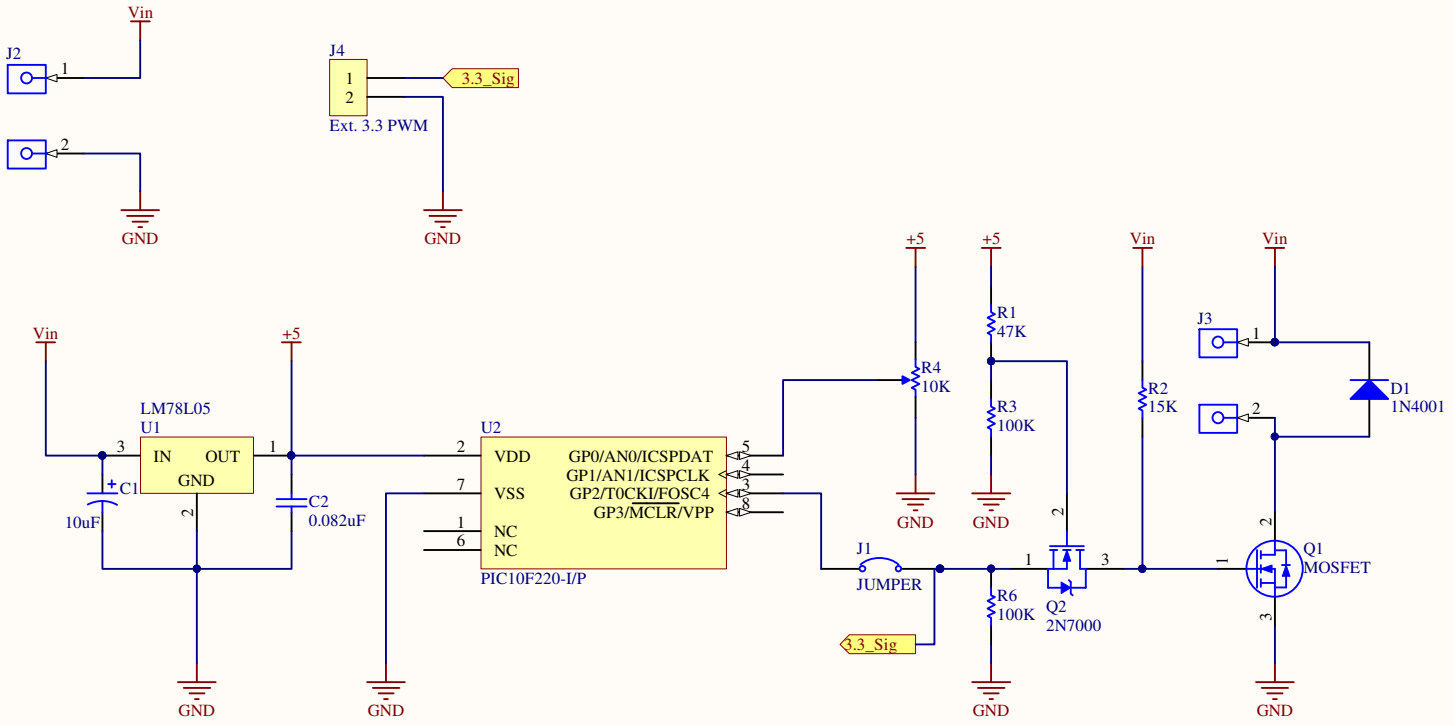

Title: Motor Driver		
Size: Letter	Number	Revision: 1
Date: 4/13/2017		Sheet of
File: Motor_Driver.SchDoc		Drawn By: Tomas Bernreiter