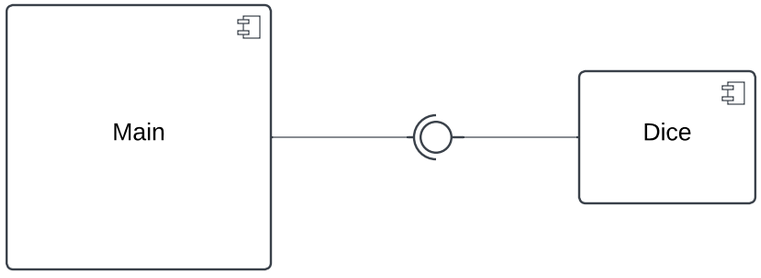
Main
Dice

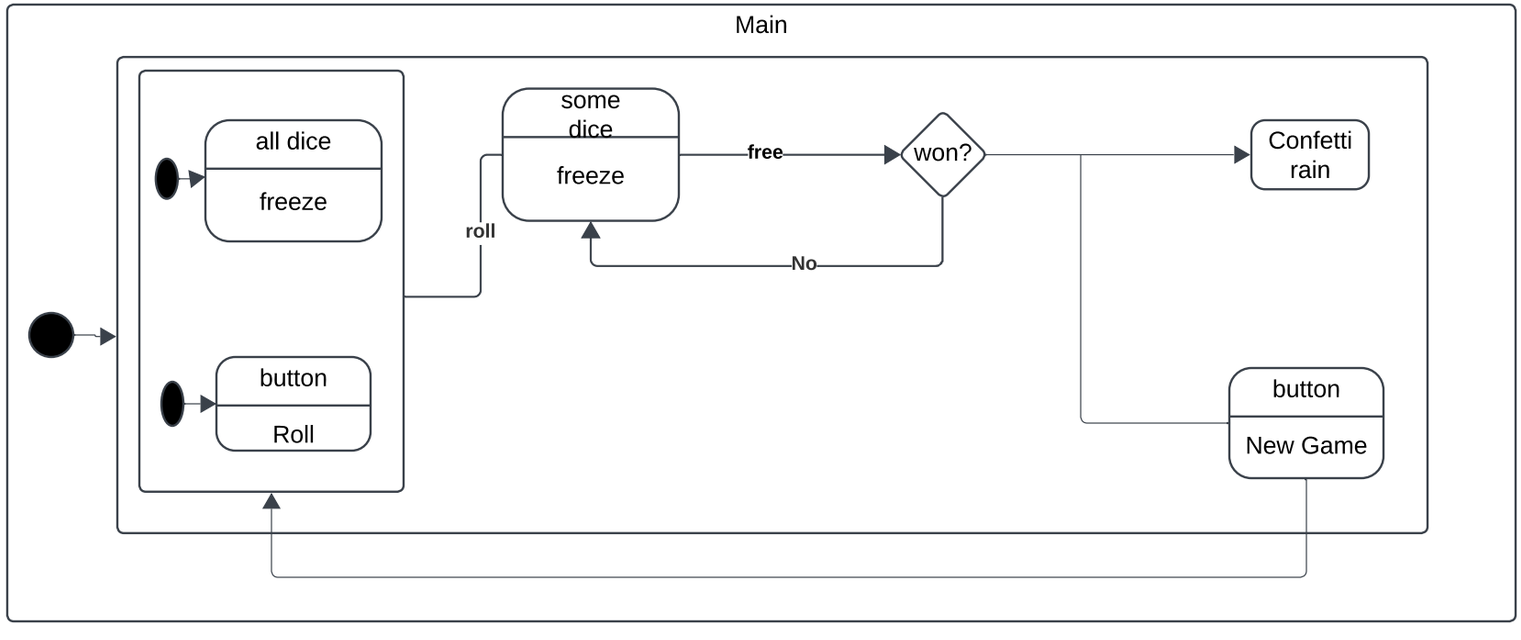
Main
all dice
freeze
button
Roll
roll
some dice
freeze
free
won?
No
Confetti rain
button
New Game

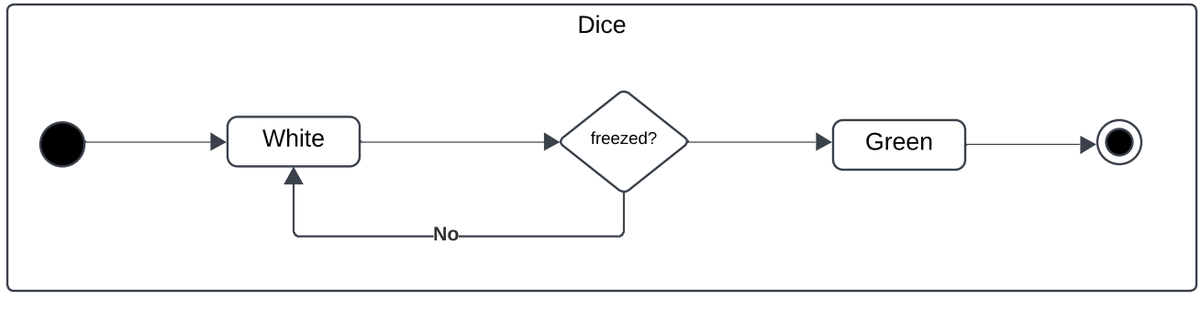
Dice
White
freezed?
Green
No