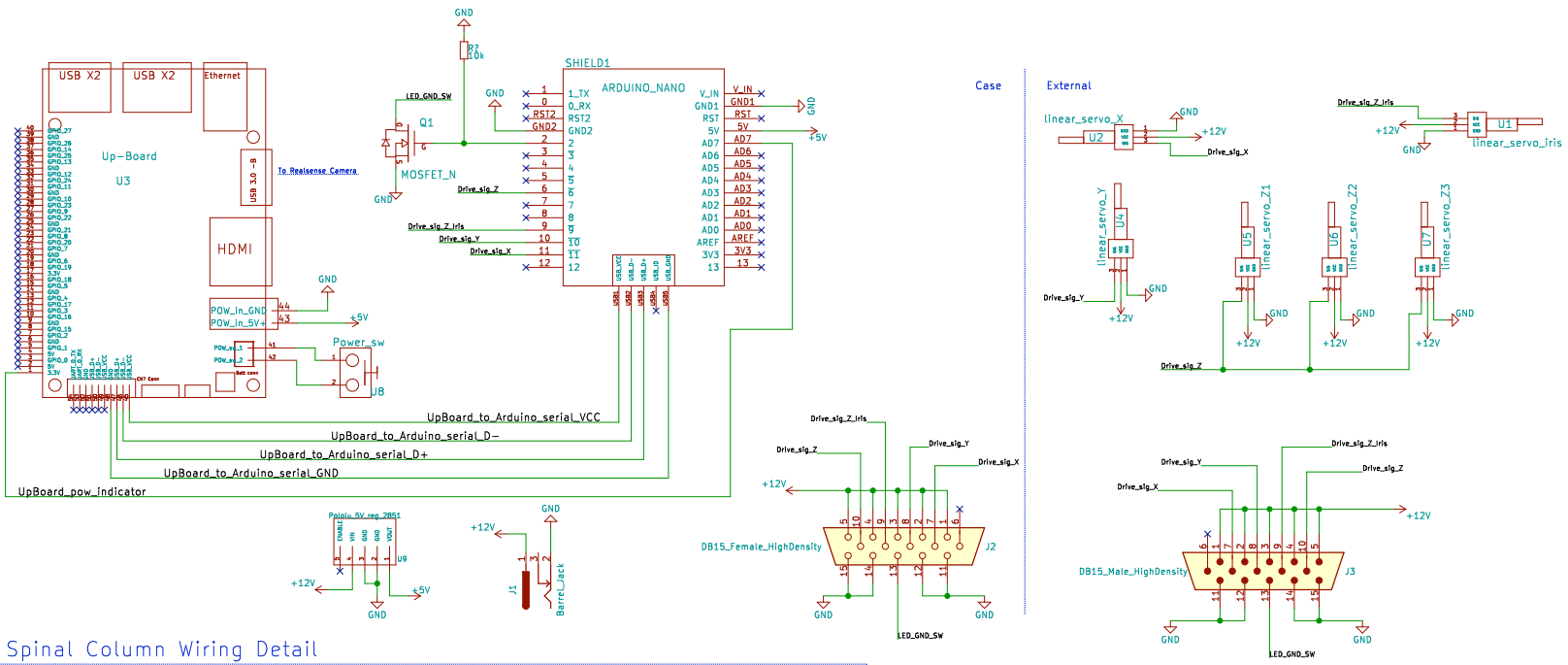

Spinal Column Wiring Detail

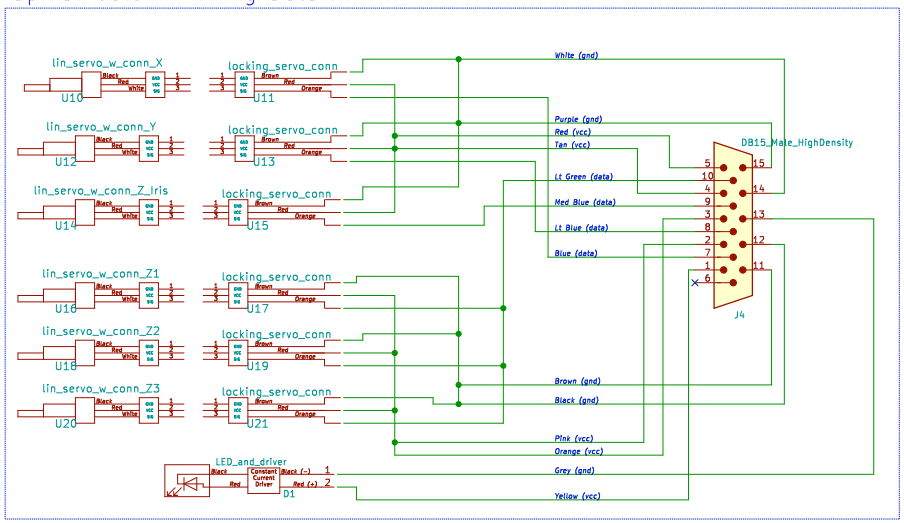

15 Pin DB Color Code	
Pin 1	Yellow
Pin 2	Pink
Pin 3	Orange
Pin 4	Tan
Pin 5	Red
Pin 6	Green
Pin 7	Blue
Pin 8	Lt Blue
Pin 9	Med Blue
Pin 10	Lt Green
Pin 11	Brown
Pin 12	Black
Pin 13	Grey
Pin 14	White
Pin 15	Purple

Sheet: /
File: shy_bot_pcb.sch

Title:

Size: A3	Date: Feb 8th 2018	Rev: 1.0
KiCad E.D.A. kicad 4.0.7		Id: 1/1