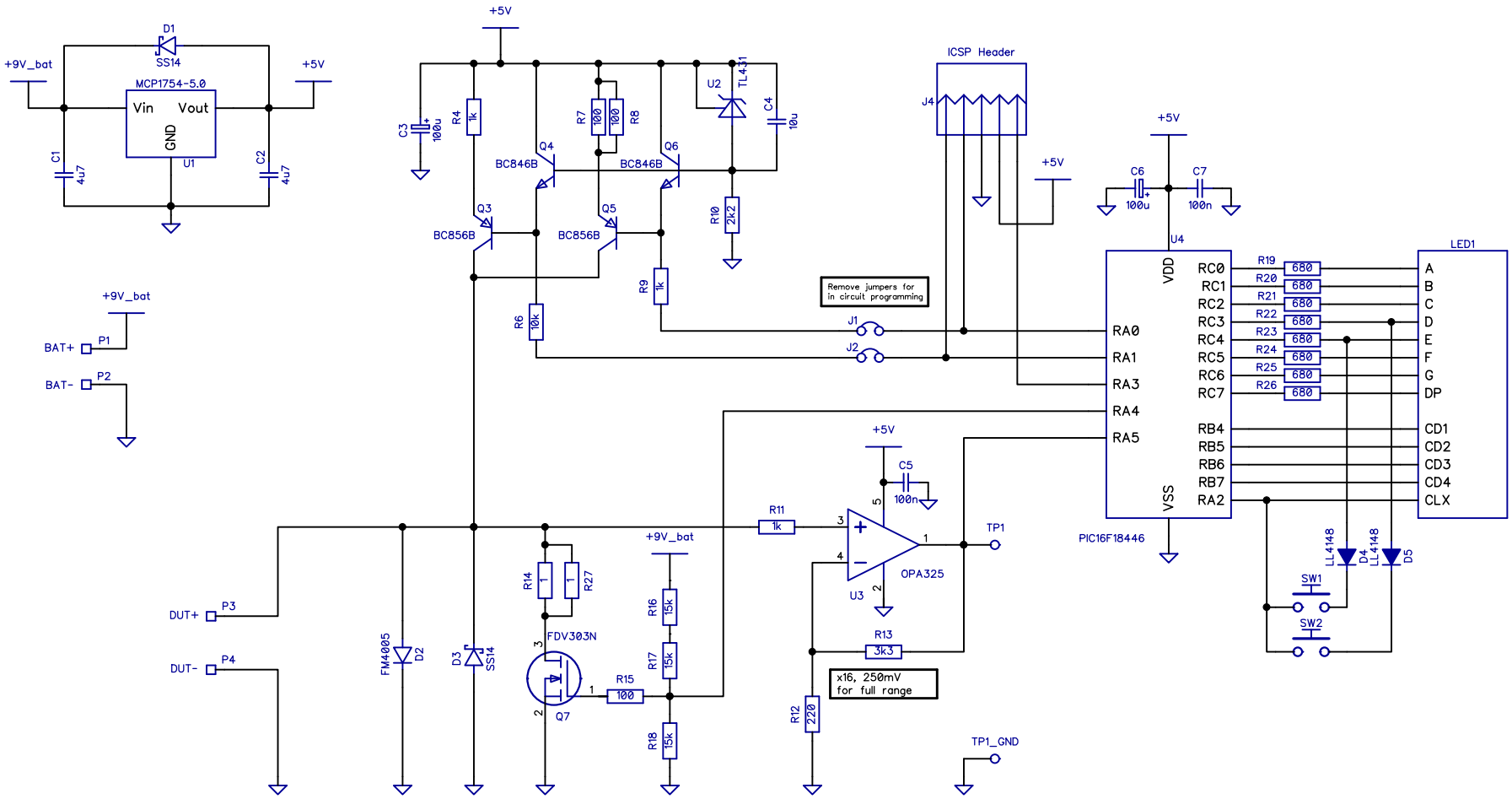
+9V_bat
D1
SS14
MCP1754-5.0
Vin
Vout
GND
U1
C1
4u7
C2
4u7
+5V
C3
100u
R4
1k
R7
100
R8
100
U2
TL431
C4
10u
Q4
BC846B
Q6
BC846B
Q3
BC856B
Q5
BC856B
R10
2k2
R9
1k
R6
10k
ICSP Header
J4
C6
100u
C7
100n
U4
VDD
VSS
RC0
RC1
RC2
RC3
RC4
RC5
RC6
RC7
RA0
RA1
RA3
RA4
RA5
RB4
RB5
RB6
RB7
RA2
PIC16F18446
R19
R20
R21
R22
R23
R24
R25
R26
680
LED1
A
B
C
D
E
F
G
DP
CD1
CD2
CD3
CD4
CLX
Remove jumpers for in circuit programming
J1
J2
BAT+
P1
BAT-
P2
DUT+
P3
DUT-
P4
FM4005
D2
D3
SS14
R14
1
R27
1
FDV303N
Q7
R15
100
R16
15k
R17
15k
R18
15k
R11
1k
C5
100n
OPA325
U3
TP1
R13
3k3
R12
220
x16, 250mV for full range
TP1_GND
LL4148
D4
LL4148
D5
SW1
SW2