TABLE OF CONTENTS

Page Description

<CON_TC_SNO16>

SKU	VARIANT	NVPN	ASSEMBLY
B	BASE	600-10873-BASE-000	BASE LEVEL GENERIC SCHEMATIC ONLY, COMMON & NO_STUFF ASSEMBLY NOTES AND BOM NOT FINAL
1	SKU0000	600-10873-0000-100	P873, SKU 0, LP, GT218-300-Bx, 589/1402/667, 1024MB/64bit, 128Mx8 DDR3, DVI-DL+HDMI+VGA, DT
2	<UNDEFINED>	<UNDEFINED>	<UNDEFINED>
3	<UNDEFINED>	<UNDEFINED>	<UNDEFINED>
4	<UNDEFINED>	<UNDEFINED>	<UNDEFINED>
5	<UNDEFINED>	<UNDEFINED>	<UNDEFINED>
6	<UNDEFINED>	<UNDEFINED>	<UNDEFINED>
7	<UNDEFINED>	<UNDEFINED>	<UNDEFINED>
8	<UNDEFINED>	<UNDEFINED>	<UNDEFINED>
9	<UNDEFINED>	<UNDEFINED>	<UNDEFINED>
10	<UNDEFINED>	<UNDEFINED>	<UNDEFINED>
11	<UNDEFINED>	<UNDEFINED>	<UNDEFINED>
12	<UNDEFINED>	<UNDEFINED>	<UNDEFINED>
13	<UNDEFINED>	<UNDEFINED>	<UNDEFINED>
14	<UNDEFINED>	<UNDEFINED>	<UNDEFINED>
15	<UNDEFINED>	<UNDEFINED>	<UNDEFINED>

MSIS-RMA
夏舒萍
20100601

ASSEMBLY	BASE LEVEL GENERIC SCHEMATIC ONLY, COMMON & NO_STUFF ASSEMBLY NOTES AND BOM NOT FINAL
PAGE DETAIL	Table of Contents

ALL NVIDIA DESIGN SPECIFICATIONS, REFERENCE SPECIFICATIONS, REFERENCE BOARDS, FILES, DRAWINGS, DIAGNOSTICS, LISTS AND OTHER DOCUMENTS OR INFORMATION (TOGETHER AND SEPARATELY, 'MATERIALS') ARE BEING PROVIDED 'AS IS'. THE MATERIALS MAY CONTAIN KNOWN AND UNKNOWN VIOLATIONS OR DEVIATIONS OF INDUSTRY STANDARDS AND SPECIFICATIONS. NVIDIA MAKES NO WARRANTIES, EXPRESSED, IMPLIED, STATUTORY OR OTHERWISE WITH RESPECT TO THE MATERIALS OR OTHERWISE, AND EXPRESSLY DISCLAIMS ALL IMPLIED WARRANTIES INCLUDING, WITHOUT LIMITATION, THE WARRANTIES OF DESIGN, OF NONINFRINGEMENT, MERCHANTABILITY OR FITNESS FOR A PARTICULAR PURPOSE, OR ARISING FROM A COURSE OF DEALING, TRADE USAGE, TRADE PRACTICE, OR INDUSTRY STANDARDS.

NVIDIA CORPORATION
2701 SAN TOMAS EXPRESSWAY
SANTA CLARA, CA 95050, USA

NV_PN	600-10873-BASE-000		
PCB REV	P873-A01	PAGE	
BOM REV	A	DATE	26-FEB-2010

PCI Express Interface

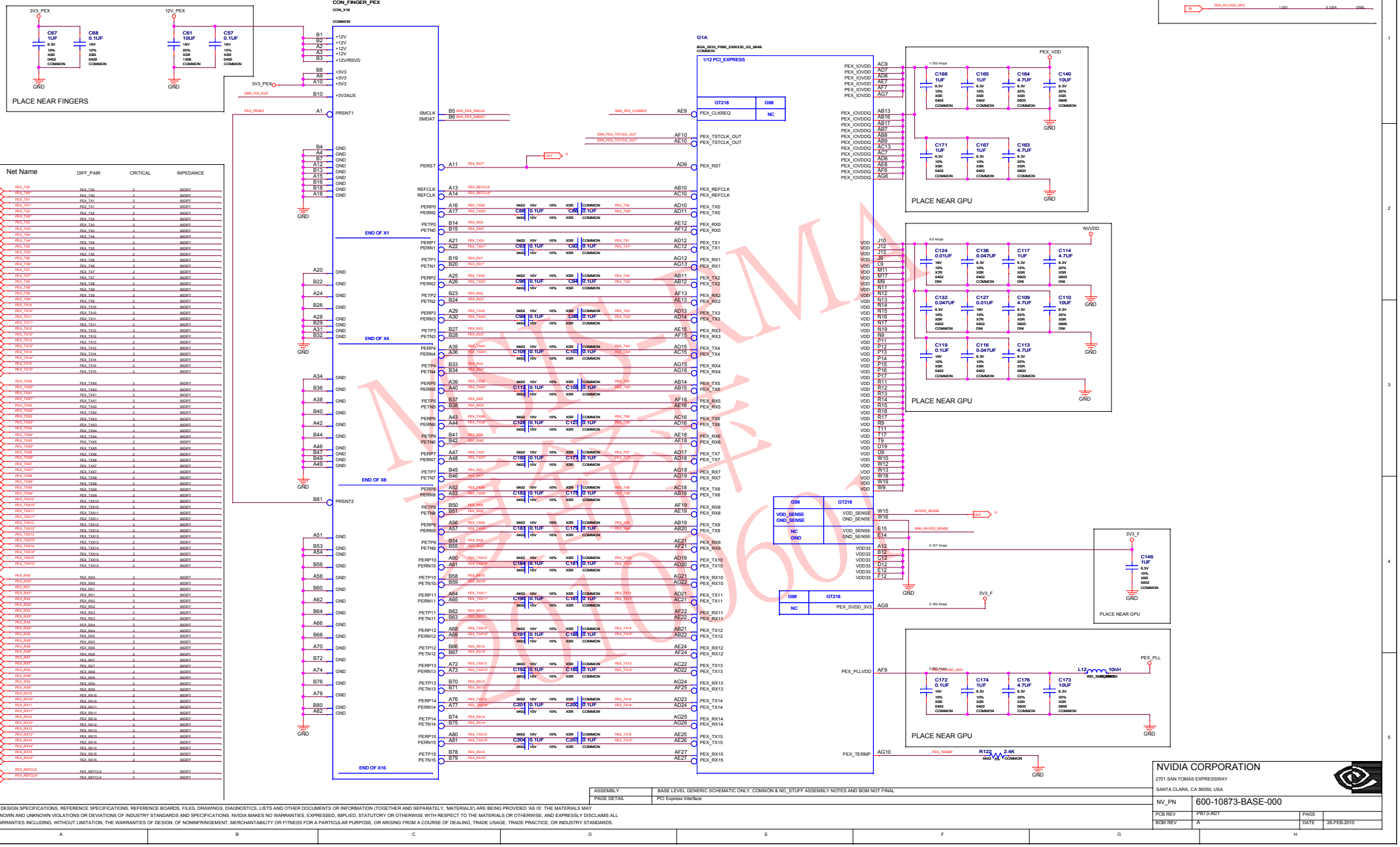

Net Name	DIFF_PAIR	CRITICAL	IMPEDANCE
PEX_TX0	PEX_TX0	2	90DIFF
PEX_TX0*	PEX_TX0*	2	90DIFF
PEX_TX1	PEX_TX1	2	90DIFF
PEX_TX1*	PEX_TX1*	2	90DIFF
PEX_TX2	PEX_TX2	2	90DIFF
PEX_TX2*	PEX_TX2*	2	90DIFF
PEX_TX3	PEX_TX3	2	90DIFF
PEX_TX3*	PEX_TX3*	2	90DIFF
PEX_TX4	PEX_TX4	2	90DIFF
PEX_TX4*	PEX_TX4*	2	90DIFF
PEX_TX5	PEX_TX5	2	90DIFF
PEX_TX5*	PEX_TX5*	2	90DIFF
PEX_TX6	PEX_TX6	2	90DIFF
PEX_TX6*	PEX_TX6*	2	90DIFF
PEX_TX7	PEX_TX7	2	90DIFF
PEX_TX7*	PEX_TX7*	2	90DIFF
PEX_TX8	PEX_TX8	2	90DIFF
PEX_TX8*	PEX_TX8*	2	90DIFF
PEX_TX9	PEX_TX9	2	90DIFF
PEX_TX9*	PEX_TX9*	2	90DIFF
PEX_TX10	PEX_TX10	2	90DIFF
PEX_TX10*	PEX_TX10*	2	90DIFF
PEX_TX11	PEX_TX11	2	90DIFF
PEX_TX11*	PEX_TX11*	2	90DIFF
PEX_TX12	PEX_TX12	2	90DIFF
PEX_TX12*	PEX_TX12*	2	90DIFF
PEX_TX13	PEX_TX13	2	90DIFF
PEX_TX13*	PEX_TX13*	2	90DIFF
PEX_TX14	PEX_TX14	2	90DIFF
PEX_TX14*	PEX_TX14	2	90DIFF
PEX_TX15	PEX_TX15	2	90DIFF
PEX_TX15*	PEX_TX15	2	90DIFF
PEX_TX0	PEX_TX0	2	90DIFF
PEX_TX0*	PEX_TX0	2	90DIFF
PEX_TX1	PEX_TX1	2	90DIFF
PEX_TX1*	PEX_TX1	2	90DIFF
PEX_TX2	PEX_TX2	2	90DIFF
PEX_TX2*	PEX_TX2	2	90DIFF
PEX_TX3	PEX_TX3	2	90DIFF
PEX_TX3*	PEX_TX3	2	90DIFF
PEX_TX4	PEX_TX4	2	90DIFF
PEX_TX4*	PEX_TX4	2	90DIFF
PEX_TX5	PEX_TX5	2	90DIFF
PEX_TX5*	PEX_TX5	2	90DIFF
PEX_TX6	PEX_TX6	2	90DIFF
PEX_TX6*	PEX_TX6	2	90DIFF
PEX_TX7	PEX_TX7	2	90DIFF
PEX_TX7*	PEX_TX7	2	90DIFF
PEX_TX8	PEX_TX8	2	90DIFF
PEX_TX8*	PEX_TX8	2	90DIFF
PEX_TX9	PEX_TX9	2	90DIFF
PEX_TX9*	PEX_TX9	2	90DIFF
PEX_TX10	PEX_TX10	2	90DIFF
PEX_TX10*	PEX_TX10	2	90DIFF
PEX_TX11	PEX_TX11	2	90DIFF
PEX_TX11*	PEX_TX11	2	90DIFF
PEX_TX12	PEX_TX12	2	90DIFF
PEX_TX12*	PEX_TX12	2	90DIFF
PEX_TX13	PEX_TX13	2	90DIFF
PEX_TX13*	PEX_TX13	2	90DIFF
PEX_TX14	PEX_TX14	2	90DIFF
PEX_TX14*	PEX_TX14	2	90DIFF
PEX_TX15	PEX_TX15	2	90DIFF
PEX_TX15*	PEX_TX15	2	90DIFF
PEX_RX0	PEX_RX0	2	90DIFF
PEX_RX0*	PEX_RX0	2	90DIFF
PEX_RX1	PEX_RX1	2	90DIFF
PEX_RX1*	PEX_RX1	2	90DIFF
PEX_RX2	PEX_RX2	2	90DIFF
PEX_RX2*	PEX_RX2	2	90DIFF
PEX_RX3	PEX_RX3	2	90DIFF
PEX_RX3*	PEX_RX3	2	90DIFF
PEX_RX4	PEX_RX4	2	90DIFF
PEX_RX4*	PEX_RX4	2	90DIFF
PEX_RX5	PEX_RX5	2	90DIFF
PEX_RX5*	PEX_RX5	2	90DIFF
PEX_RX6	PEX_RX6	2	90DIFF
PEX_RX6*	PEX_RX6	2	90DIFF
PEX_RX7	PEX_RX7	2	90DIFF
PEX_RX7*	PEX_RX7	2	90DIFF
PEX_RX8	PEX_RX8	2	90DIFF
PEX_RX8*	PEX_RX8	2	90DIFF
PEX_RX9	PEX_RX9	2	90DIFF
PEX_RX9*	PEX_RX9	2	90DIFF
PEX_RX10	PEX_RX10	2	90DIFF
PEX_RX10*	PEX_RX10	2	90DIFF
PEX_RX11	PEX_RX11	2	90DIFF
PEX_RX11*	PEX_RX11	2	90DIFF
PEX_RX12	PEX_RX12	2	90DIFF
PEX_RX12*	PEX_RX12	2	90DIFF
PEX_RX13	PEX_RX13	2	90DIFF
PEX_RX13*	PEX_RX13	2	90DIFF
PEX_RX14	PEX_RX14	2	90DIFF
PEX_RX14*	PEX_RX14	2	90DIFF
PEX_RX15	PEX_RX15	2	90DIFF
PEX_RX15*	PEX_RX15	2	90DIFF
PEX_REFCLK	PEX_REFCLK	2	90DIFF
PEX_REFCLK*	PEX_REFCLK	2	90DIFF

Net Name	MIN_WIDTH	MAX_WIDTH
PEX_PRSNT	12MIL	
PEX_TERMP	12MIL	

Net Name	VOLTAGE	MAX_CURRENT
PEX_PLLVDD_GPU	1.05V	0.120A

ASSEMBLY	BASE LEVEL GENERIC SCHEMATIC ONLY, COMMON & NO_STUFF ASSEMBLY NOTES AND BOM NOT FINAL
PAGE DETAIL	PCI Express Interface

ALL NVIDIA DESIGN SPECIFICATIONS, REFERENCE SPECIFICATIONS, REFERENCE BOARDS, FILES, DRAWINGS, DIAGNOSTICS, LISTS AND OTHER DOCUMENTS OR INFORMATION (TOGETHER AND SEPARATELY, 'MATERIALS') ARE BEING PROVIDED 'AS IS'. THE MATERIALS MAY CONTAIN KNOWN AND UNKNOWN VIOLATIONS OR DEVIATIONS OF INDUSTRY STANDARDS AND SPECIFICATIONS. NVIDIA MAKES NO WARRANTIES, EXPRESSED, IMPLIED, STATUTORY OR OTHERWISE WITH RESPECT TO THE MATERIALS OR OTHERWISE, AND EXPRESSLY DISCLAIMS ALL IMPLIED WARRANTIES INCLUDING, WITHOUT LIMITATION, THE WARRANTIES OF DESIGN, OF NONINFRINGEMENT, MERCHANTABILITY OR FITNESS FOR A PARTICULAR PURPOSE, OR ARISING FROM A COURSE OF DEALING, TRADE USAGE, TRADE PRACTICE, OR INDUSTRY STANDARDS.

NVIDIA CORPORATION
2701 SAN TOMAS EXPRESSWAY
SANTA CLARA, CA 95050, USA

NV_PN	600-10873-BASE-000		
PCB REV	P873-A01	PAGE	
BOM REV	A	DATE	26-FEB-2010

NVIDIA Confidential 2010-06-01

Frame Buffer Interface

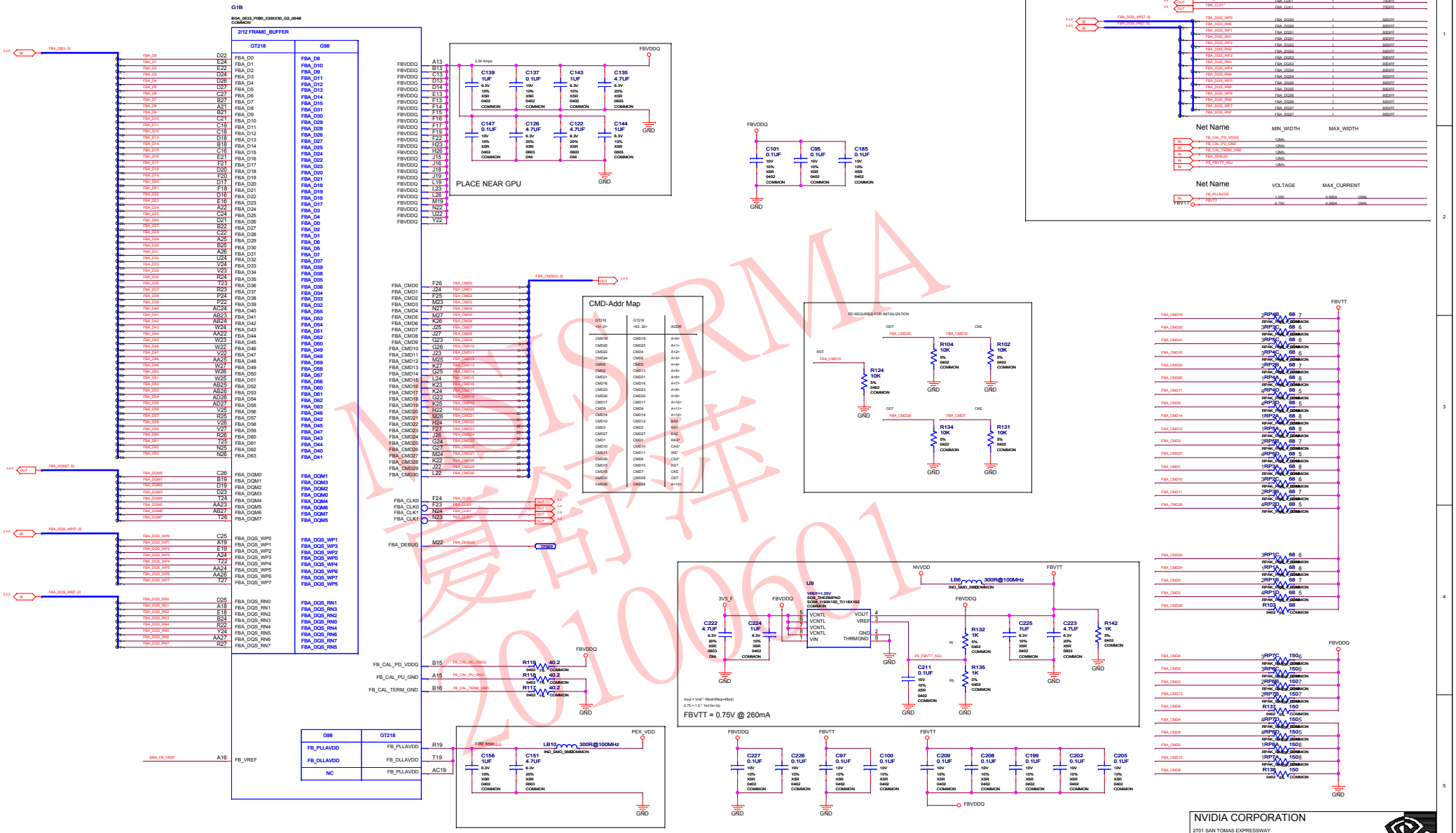

MISTERMA 复合样 2010060

ASSEMBLY	BASE LEVEL GENERIC SCHEMATIC ONLY, COMMON & NO_STUFF ASSEMBLY NOTES AND BOM NOT FINAL
PAGE DETAIL	Frame Buffer Interface

ALL NVIDIA DESIGN SPECIFICATIONS, REFERENCE SPECIFICATIONS, REFERENCE BOARDS, FILES, DRAWINGS, DIAGNOSTICS, LISTS AND OTHER DOCUMENTS OR INFORMATION (TOGETHER AND SEPARATELY, 'MATERIALS') ARE BEING PROVIDED 'AS IS'. THE MATERIALS MAY CONTAIN KNOWN AND UNKNOWN VIOLATIONS OR DEVIATIONS OF INDUSTRY STANDARDS AND SPECIFICATIONS. NVIDIA MAKES NO WARRANTIES, EXPRESSED, IMPLIED, STATUTORY OR OTHERWISE WITH RESPECT TO THE MATERIALS OR OTHERWISE, AND EXPRESSLY DISCLAIMS ALL IMPLIED WARRANTIES INCLUDING, WITHOUT LIMITATION, THE WARRANTIES OF DESIGN, OF NONINFRINGEMENT, MERCHANTABILITY OR FITNESS FOR A PARTICULAR PURPOSE, OR ARISING FROM A COURSE OF DEALING, TRADE USAGE, TRADE PRACTICE, OR INDUSTRY STANDARDS.

NVIDIA CORPORATION
2701 SAN TOMAS EXPRESSWAY
SANTA CLARA, CA 95050, USA

NV_PN	600-10873-BASE-000		
PCB REV	P873-A01	PAGE	
BOM REV	A	DATE	26-FEB-2010

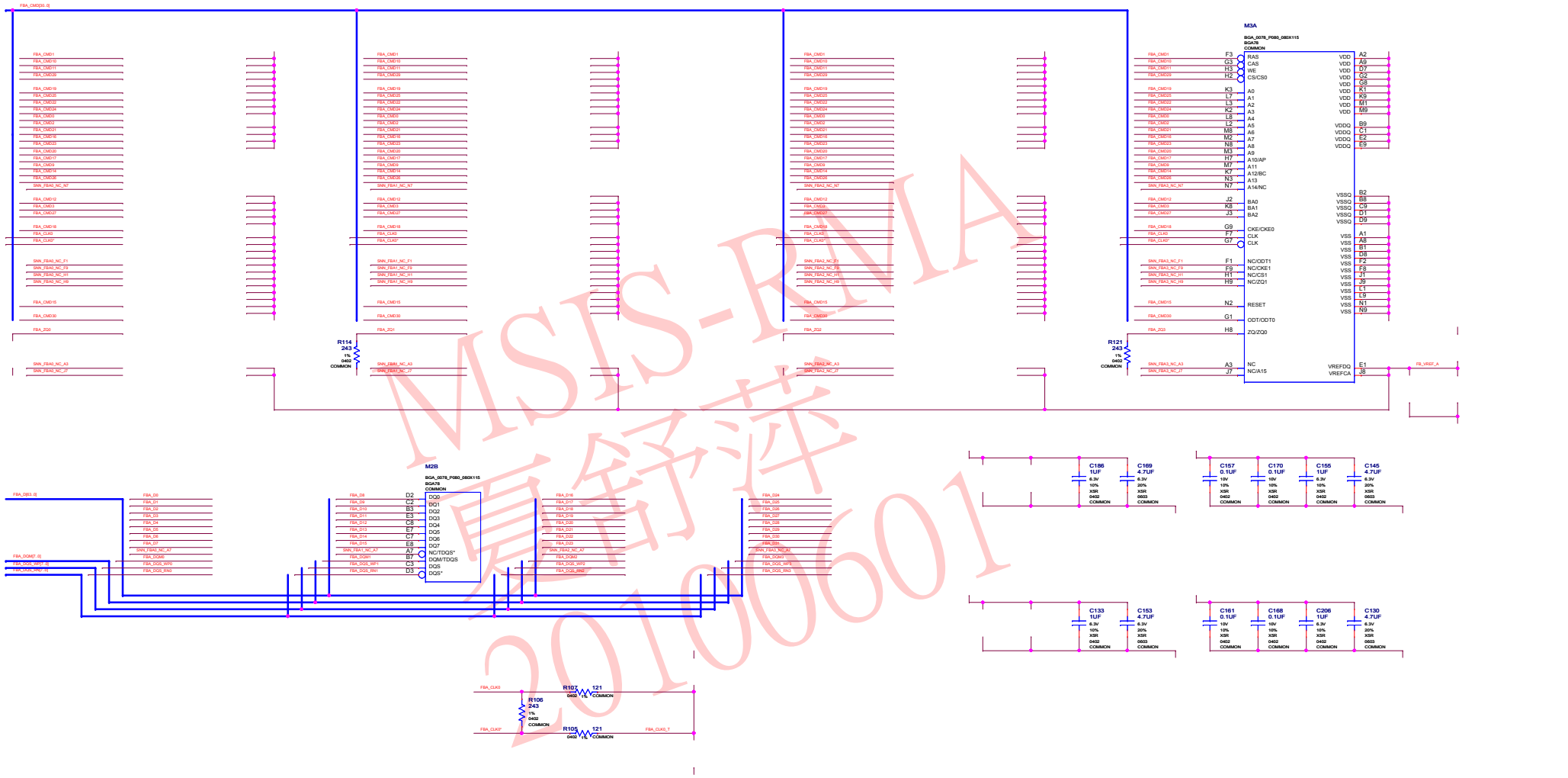

MSI-RMA
晨舒萍
20100601

Memory 1st Bank 32..63

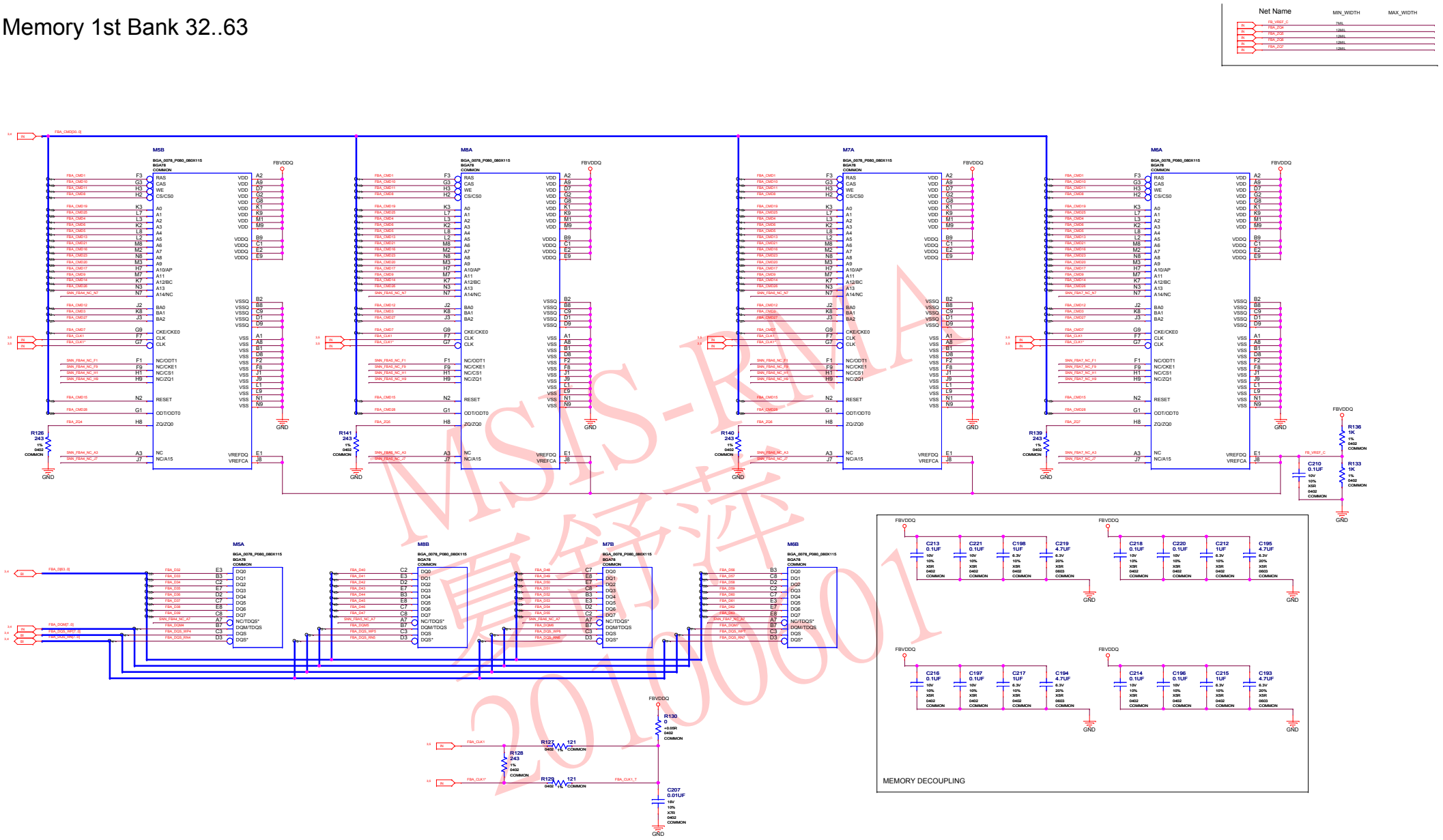

MSIS-RMA 夏舒萍 20100001

ASSEMBLY	BASE LEVEL GENERIC SCHEMATIC ONLY, COMMON & NO_STUFF ASSEMBLY NOTES AND BOM NOT FINAL
PAGE DETAIL	Memory 1st Bank 32..63

ALL NVIDIA DESIGN SPECIFICATIONS, REFERENCE SPECIFICATIONS, REFERENCE BOARDS, FILES, DRAWINGS, DIAGNOSTICS, LISTS AND OTHER DOCUMENTS OR INFORMATION (TOGETHER AND SEPARATELY, 'MATERIALS') ARE BEING PROVIDED 'AS IS'. THE MATERIALS MAY CONTAIN KNOWN AND UNKNOWN VIOLATIONS OR DEVIATIONS OF INDUSTRY STANDARDS AND SPECIFICATIONS. NVIDIA MAKES NO WARRANTIES, EXPRESSED, IMPLIED, STATUTORY OR OTHERWISE WITH RESPECT TO THE MATERIALS OR OTHERWISE, AND EXPRESSLY DISCLAIMS ALL IMPLIED WARRANTIES INCLUDING, WITHOUT LIMITATION, THE WARRANTIES OF DESIGN, OF NONINFRINGEMENT, MERCHANTABILITY OR FITNESS FOR A PARTICULAR PURPOSE, OR ARISING FROM A COURSE OF DEALING, TRADE USAGE, TRADE PRACTICE, OR INDUSTRY STANDARDS.

NVIDIA CORPORATION
2701 SAN TOMAS EXPRESSWAY
SANTA CLARA, CA 95050, USA

NV_PN	600-10873-BASE-000		
PCB REV	P873-A01	PAGE	
BOM REV	A	DATE	26-FEB-2010

DAC A VGA

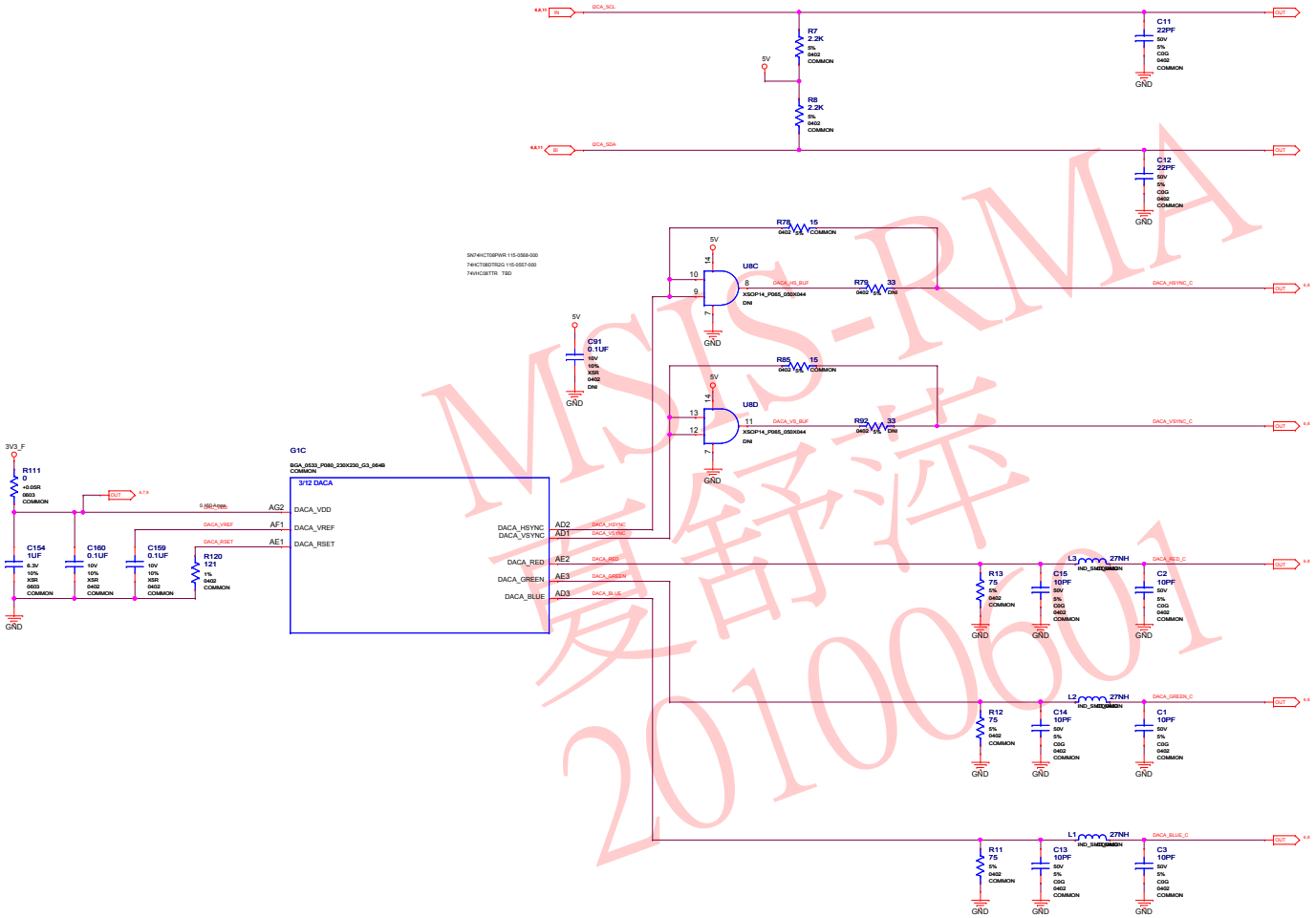

MSIS-RMA
曾舒萍
20100601

ASSEMBLY	BASE LEVEL GENERIC SCHEMATIC ONLY, COMMON & NO_STUFF ASSEMBLY NOTES AND BOM NOT FINAL
PAGE DETAIL	DAC A VGA

ALL NVIDIA DESIGN SPECIFICATIONS, REFERENCE SPECIFICATIONS, REFERENCE BOARDS, FILES, DRAWINGS, DIAGNOSTICS, LISTS AND OTHER DOCUMENTS OR INFORMATION (TOGETHER AND SEPARATELY, 'MATERIALS') ARE BEING PROVIDED 'AS IS'. THE MATERIALS MAY CONTAIN KNOWN AND UNKNOWN VIOLATIONS OR DEVIATIONS OF INDUSTRY STANDARDS AND SPECIFICATIONS. NVIDIA MAKES NO WARRANTIES, EXPRESSED, IMPLIED, STATUTORY OR OTHERWISE WITH RESPECT TO THE MATERIALS OR OTHERWISE, AND EXPRESSLY DISCLAIMS ALL IMPLIED WARRANTIES INCLUDING, WITHOUT LIMITATION, THE WARRANTIES OF DESIGN, OF NONINFRINGEMENT, MERCHANTABILITY OR FITNESS FOR A PARTICULAR PURPOSE, OR ARISING FROM A COURSE OF DEALING, TRADE USAGE, TRADE PRACTICE, OR INDUSTRY STANDARDS.

NVIDIA CORPORATION
2701 SAN TOMAS EXPRESSWAY
SANTA CLARA, CA 95050, USA

NV_PN	600-10873-BASE-000		
PCB REV	P873-A01	PAGE	
BOM REV	A	DATE	26-FEB-2010

DAC B VGA Header

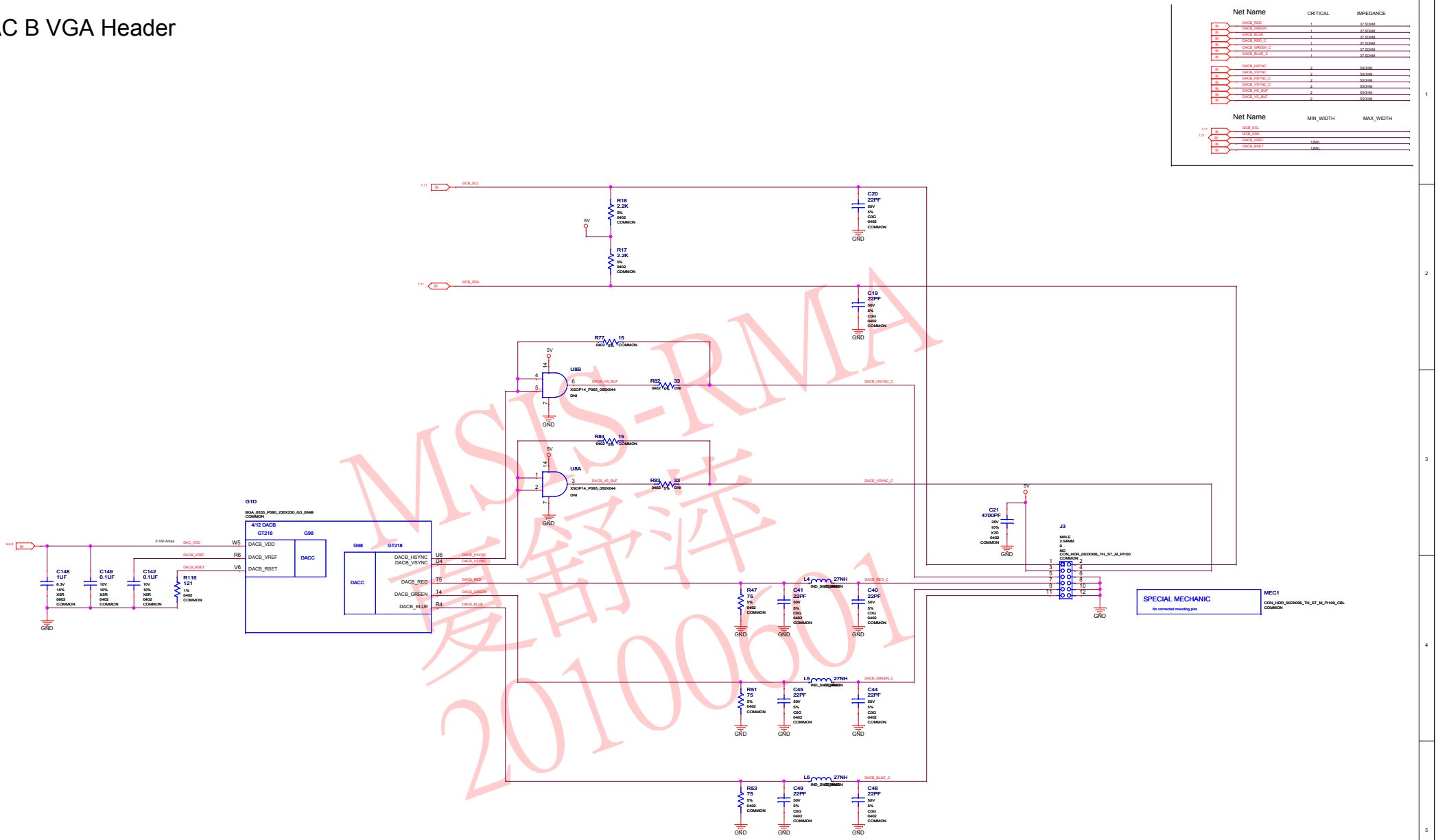

MSIS-RMA 夏舒萍 20100601

ASSEMBLY	BASE LEVEL GENERIC SCHEMATIC ONLY, COMMON & NO_STUFF ASSEMBLY NOTES AND BOM NOT FINAL
PAGE DETAIL	DAC B VGA Header

ALL NVIDIA DESIGN SPECIFICATIONS, REFERENCE SPECIFICATIONS, REFERENCE BOARDS, FILES, DRAWINGS, DIAGNOSTICS, LISTS AND OTHER DOCUMENTS OR INFORMATION (TOGETHER AND SEPARATELY, 'MATERIALS') ARE BEING PROVIDED 'AS IS'. THE MATERIALS MAY CONTAIN KNOWN AND UNKNOWN VIOLATIONS OR DEVIATIONS OF INDUSTRY STANDARDS AND SPECIFICATIONS. NVIDIA MAKES NO WARRANTIES, EXPRESSED, IMPLIED, STATUTORY OR OTHERWISE WITH RESPECT TO THE MATERIALS OR OTHERWISE, AND EXPRESSLY DISCLAIMS ALL IMPLIED WARRANTIES INCLUDING, WITHOUT LIMITATION, THE WARRANTIES OF DESIGN, OF NONINFRINGEMENT, MERCHANTABILITY OR FITNESS FOR A PARTICULAR PURPOSE, OR ARISING FROM A COURSE OF DEALING, TRADE USAGE, TRADE PRACTICE, OR INDUSTRY STANDARDS.

NVIDIA CORPORATION
2701 SAN TOMAS EXPRESSWAY
SANTA CLARA, CA 95050, USA

NV_PN	600-10873-BASE-000		
PCB REV	P873-A01	PAGE	
BOM REV	A	DATE	26-FEB-2010

TMDS Interface

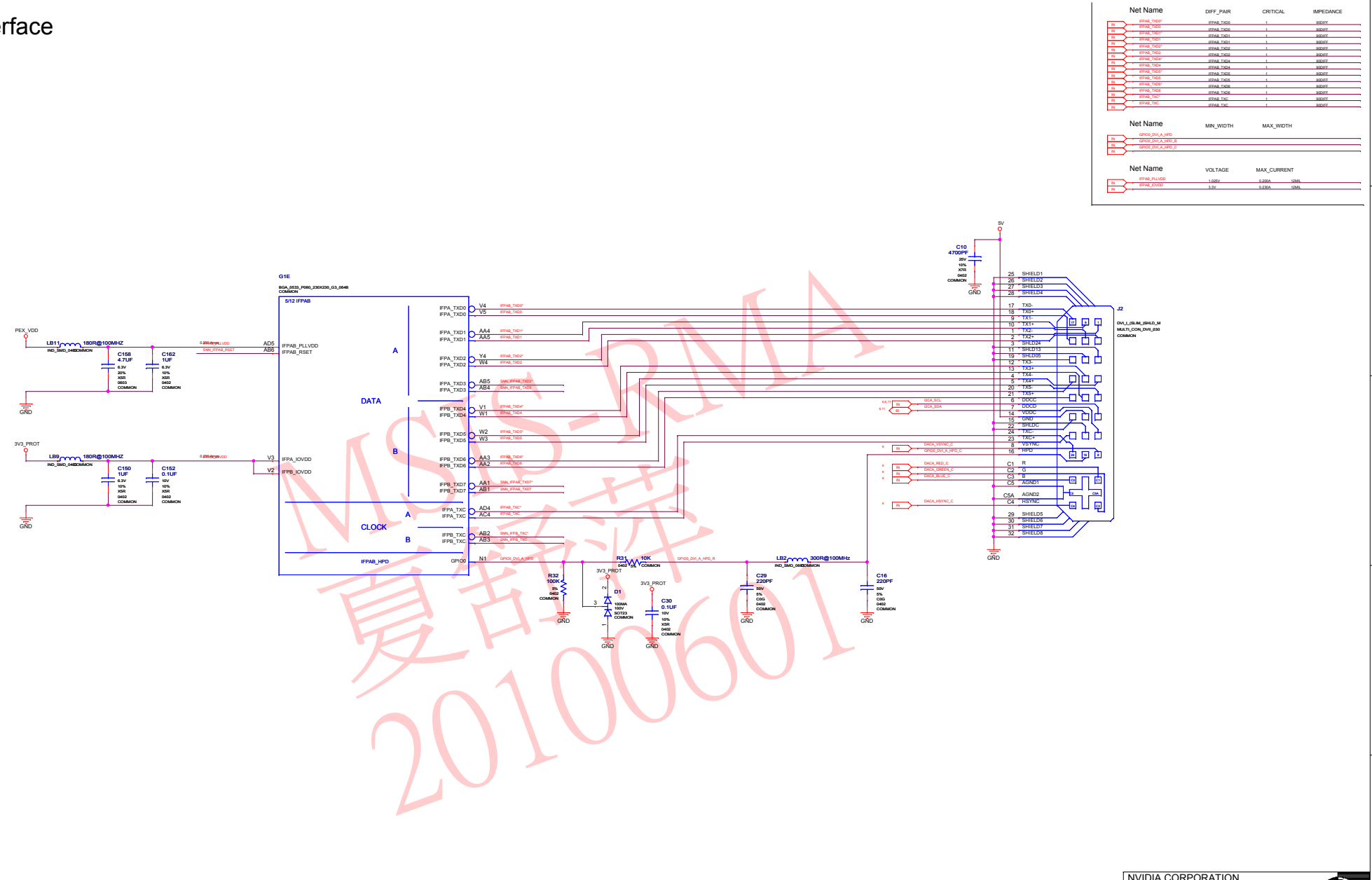

MSIS-RMA
夏新萍
20100601

ASSEMBLY	BASE LEVEL GENERIC SCHEMATIC ONLY, COMMON & NO_STUFF ASSEMBLY NOTES AND BOM NOT FINAL
PAGE DETAIL	TMDS Interface

ALL NVIDIA DESIGN SPECIFICATIONS, REFERENCE SPECIFICATIONS, REFERENCE BOARDS, FILES, DRAWINGS, DIAGNOSTICS, LISTS AND OTHER DOCUMENTS OR INFORMATION (TOGETHER AND SEPARATELY, 'MATERIALS') ARE BEING PROVIDED 'AS IS'. THE MATERIALS MAY CONTAIN KNOWN AND UNKNOWN VIOLATIONS OR DEVIATIONS OF INDUSTRY STANDARDS AND SPECIFICATIONS. NVIDIA MAKES NO WARRANTIES, EXPRESSED, IMPLIED, STATUTORY OR OTHERWISE WITH RESPECT TO THE MATERIALS OR OTHERWISE, AND EXPRESSLY DISCLAIMS ALL IMPLIED WARRANTIES INCLUDING, WITHOUT LIMITATION, THE WARRANTIES OF DESIGN, OF NONINFRINGEMENT, MERCHANTABILITY OR FITNESS FOR A PARTICULAR PURPOSE, OR ARISING FROM A COURSE OF DEALING, TRADE USAGE, TRADE PRACTICE, OR INDUSTRY STANDARDS.

NVIDIA CORPORATION
2701 SAN TOMAS EXPRESSWAY
SANTA CLARA, CA 95050, USA

NV_PN	600-10873-BASE-000		
PCB REV	P873-A01	PAGE	
BOM REV	A	DATE	26-FEB-2010

HDMI Connector

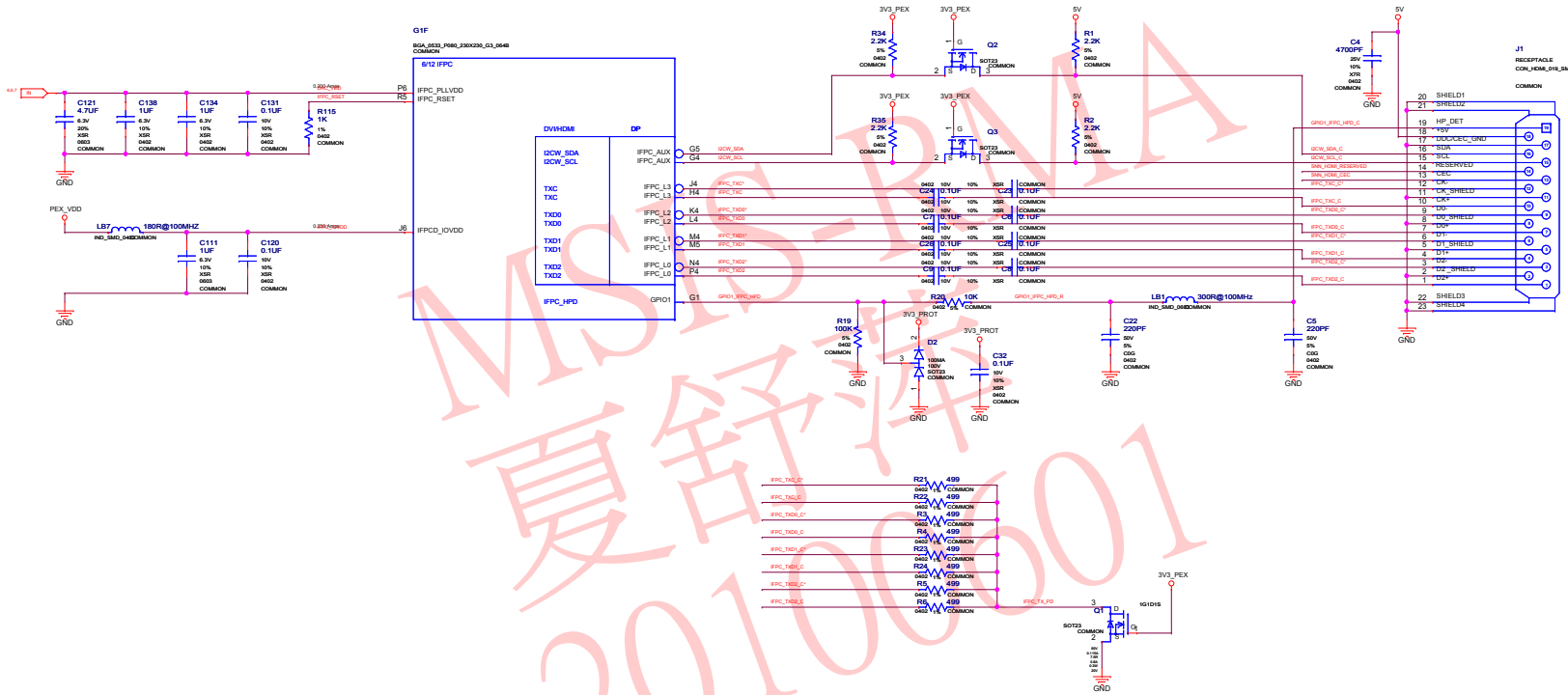

Net Name | DIFF_PAIR | CRITICAL | IMPEDANCE

Net Name | MIN_WIDTH | MAX_WIDTH

Net Name | VOLTAGE | MAX_CURRENT

MSI-PMA 夏舒洋 20100601

ASSEMBLY	BASE LEVEL GENERIC SCHEMATIC ONLY, COMMON & NO_STUFF ASSEMBLY NOTES AND BOM NOT FINAL
PAGE DETAIL	HDMI Connector

ALL NVIDIA DESIGN SPECIFICATIONS, REFERENCE SPECIFICATIONS, REFERENCE BOARDS, FILES, DRAWINGS, DIAGNOSTICS, LISTS AND OTHER DOCUMENTS OR INFORMATION (TOGETHER AND SEPARATELY, 'MATERIALS') ARE BEING PROVIDED 'AS IS'. THE MATERIALS MAY CONTAIN KNOWN AND UNKNOWN VIOLATIONS OR DEVIATIONS OF INDUSTRY STANDARDS AND SPECIFICATIONS. NVIDIA MAKES NO WARRANTIES, EXPRESSED, IMPLIED, STATUTORY OR OTHERWISE WITH RESPECT TO THE MATERIALS OR OTHERWISE, AND EXPRESSLY DISCLAIMS ALL IMPLIED WARRANTIES INCLUDING, WITHOUT LIMITATION, THE WARRANTIES OF DESIGN, OF NONINFRINGEMENT, MERCHANTABILITY OR FITNESS FOR A PARTICULAR PURPOSE, OR ARISING FROM A COURSE OF DEALING, TRADE USAGE, TRADE PRACTICE, OR INDUSTRY STANDARDS.

NVIDIA CORPORATION
2701 SAN TOMAS EXPRESSWAY
SANTA CLARA, CA 95050, USA

NV_PN	600-10873-BASE-000		
PCB REV	P873-A01	PAGE	
BOM REV	A	DATE	26-FEB-2010

Mechanical

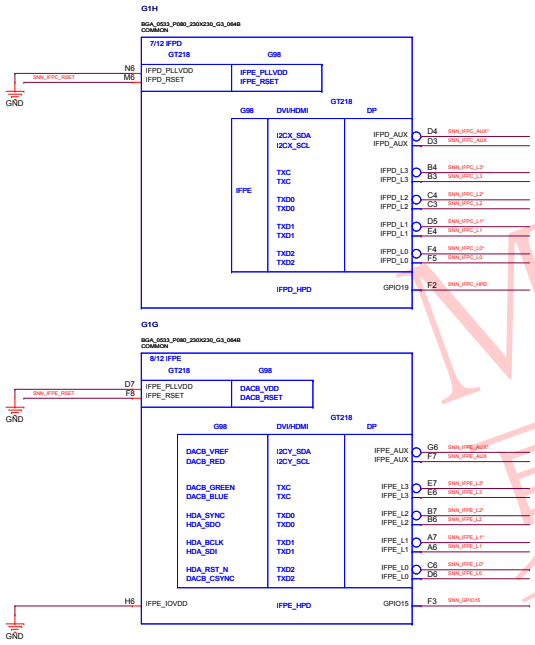

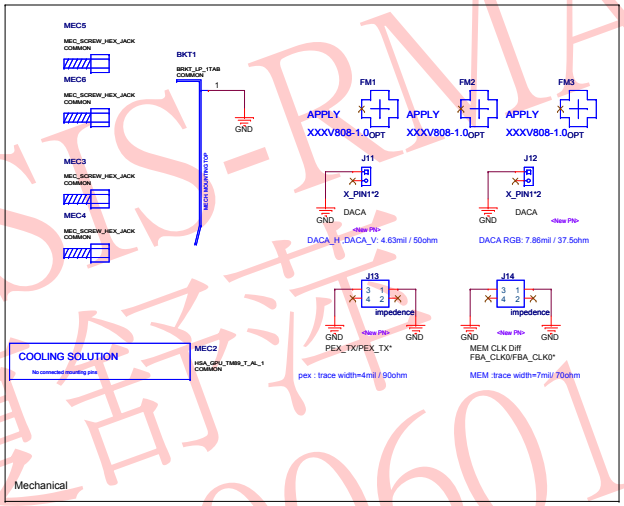

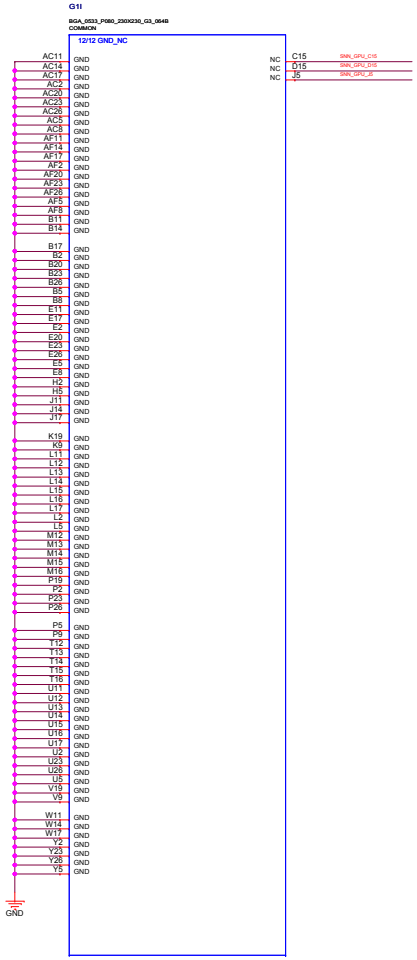

MSI-RMA
2010060

ASSEMBLY	BASE LEVEL GENERIC SCHEMATIC ONLY, COMMON & NO_STUFF ASSEMBLY NOTES AND BOM NOT FINAL
PAGE DETAIL	Mechanical

ALL NVIDIA DESIGN SPECIFICATIONS, REFERENCE SPECIFICATIONS, REFERENCE BOARDS, FILES, DRAWINGS, DIAGNOSTICS, LISTS AND OTHER DOCUMENTS OR INFORMATION (TOGETHER AND SEPARATELY, 'MATERIALS') ARE BEING PROVIDED 'AS IS'. THE MATERIALS MAY CONTAIN KNOWN AND UNKNOWN VIOLATIONS OR DEVIATIONS OF INDUSTRY STANDARDS AND SPECIFICATIONS. NVIDIA MAKES NO WARRANTIES, EXPRESSED, IMPLIED, STATUTORY OR OTHERWISE WITH RESPECT TO THE MATERIALS OR OTHERWISE, AND EXPRESSLY DISCLAIMS ALL IMPLIED WARRANTIES INCLUDING, WITHOUT LIMITATION, THE WARRANTIES OF DESIGN, OF NONINFRINGEMENT, MERCHANTABILITY OR FITNESS FOR A PARTICULAR PURPOSE, OR ARISING FROM A COURSE OF DEALING, TRADE USAGE, TRADE PRACTICE, OR INDUSTRY STANDARDS.

NVIDIA CORPORATION
2701 SAN TOMAS EXPRESSWAY
SANTA CLARA, CA 95050, USA

NV_PN	600-10873-BASE-000		
PCB REV	P873-A01	PAGE	
BOM REV	A	DATE	26-FEB-2010

XTAL, ROM, Misc

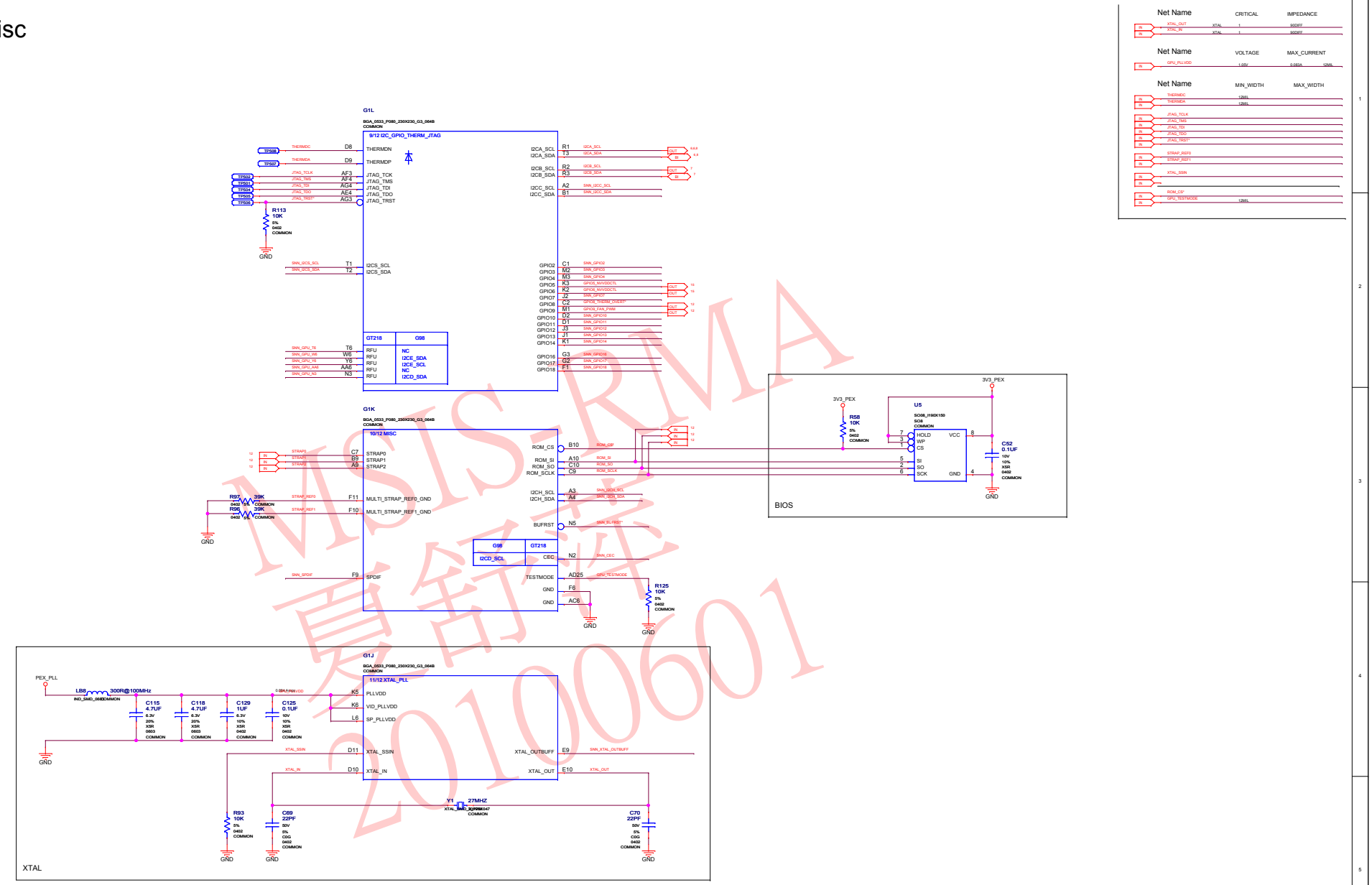

MSIS-RMA 夏舒森 20100601

ASSEMBLY	BASE LEVEL GENERIC SCHEMATIC ONLY, COMMON & NO_STUFF ASSEMBLY NOTES AND BOM NOT FINAL
PAGE DETAIL	XTAL, ROM, Misc

ALL NVIDIA DESIGN SPECIFICATIONS, REFERENCE SPECIFICATIONS, REFERENCE BOARDS, FILES, DRAWINGS, DIAGNOSTICS, LISTS AND OTHER DOCUMENTS OR INFORMATION (TOGETHER AND SEPARATELY, 'MATERIALS') ARE BEING PROVIDED 'AS IS'. THE MATERIALS MAY CONTAIN KNOWN AND UNKNOWN VIOLATIONS OR DEVIATIONS OF INDUSTRY STANDARDS AND SPECIFICATIONS. NVIDIA MAKES NO WARRANTIES, EXPRESSED, IMPLIED, STATUTORY OR OTHERWISE WITH RESPECT TO THE MATERIALS OR OTHERWISE, AND EXPRESSLY DISCLAIMS ALL IMPLIED WARRANTIES INCLUDING, WITHOUT LIMITATION, THE WARRANTIES OF DESIGN, OF NONINFRINGEMENT, MERCHANTABILITY OR FITNESS FOR A PARTICULAR PURPOSE, OR ARISING FROM A COURSE OF DEALING, TRADE USAGE, TRADE PRACTICE, OR INDUSTRY STANDARDS.

NVIDIA CORPORATION
2701 SAN TOMAS EXPRESSWAY
SANTA CLARA, CA 95050, USA

NV_PN	600-10873-BASE-000		
PCB REV	P873-A01	PAGE	
BOM REV	A	DATE	26-FEB-2010

Thermal Protection, Protected 3V3, Straps, Fan PWM

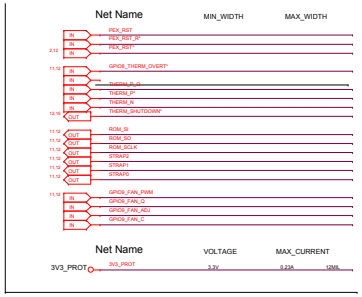

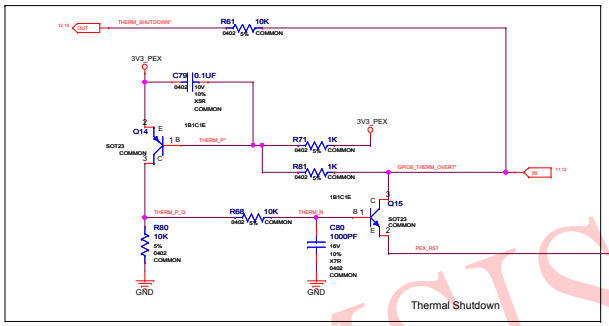

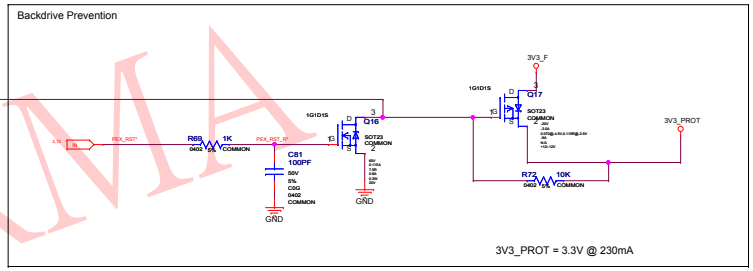

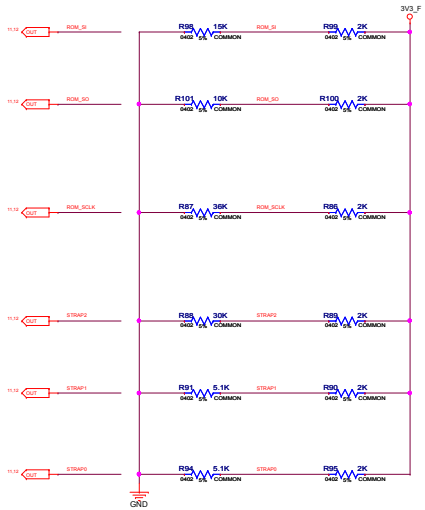

GT218 Straps

Bit	Signal	Values			
03:	RAMCFG[3]	0000	Elpida		
02:	RAMCFG[2]	0001	Qimonda		
01:	RAMCFG[1]	0010	Hynix		
00:	RAMCFG[0]	0011	Samsung		
		0100	Nanya		
		0101	Micron		
		0110	Winbond		
03:	XCLK_417	0	277 (Default)		
		1	256M		
02:	FB[0]	0	256M (Default)		
		1	512M		
01:	SMB_ALT_ADDR	0	0x9E		
		1	0x9C		
00:	VGA_DEVICE	0	Class code 302		
		1	Class code 300		
03:	PCI_DEVID_EXT	0	GT218-300-A1		
		1			
02:	SUB_VENDOR	0	No BIOS		
		1	BIOS		
01:	SLOT_CLK_CFG	0	Disable		
		1	Enable		
00:	PEX_PLL_EN_TERM100	0	Disable		
		1	Enable		
03:	PCI_DEVID[3]	0000	GT218-300-A1		
02:	PCI_DEVID[2]				
01:	PCI_DEVID[1]				
00:	PCI_DEVID[0]				
03:	3GIO_PADCFG_LUT_ADR[3]	0000	DSKTOP_DEFAULT	1000	DSKTOP_HTHRS
		0001	MOBILE_DEFAULT	1001	MOBILE_HTHRS_NAMP
02:	3GIO_PADCFG_LUT_ADR[2]	0010	MOBILE_NTHRS_LLAMP	1010	MOBILE_HTHRS_LLAMP
		0011	MOBILE_NTHRS_LAMP	1011	MOBILE_HTHRS_LAMP
01:	3GIO_PADCFG_LUT_ADR[1]	0100	MOBILE_NTHRS_HAMP	1100	MOBILE_HTHRS_HAMP
		0101	MOBILE_NTHRS_HHAMP	1101	MOBILE_HTHRS_HHAMP
00:	3GIO_PADCFG_LUT_ADR[0]	0110	MOBILE_NTHRS_HHHAMP	1110	MOBILE_HTHRS_HHHAMP
		0111	MOBILE_NTHRS_HHHHAMP	1111	MOBILE_HTHRS_HHHHAMP
03:	USER[3]	0000	Default		
02:	USER[2]				
01:	USER[1]				
00:	USER[0]				

Multilevel Straps	
5K to GND	0000
10K to GND	0001
15K to GND	0010
20K to GND	0011
25K to GND	0100
30K to GND	0101
36K to GND	0110
43K to GND	0111
5K to VCC	1000
10K to VCC	1001
15K to VCC	1010
20K to VCC	1011
25K to VCC	1100
30K to VCC	1101
36K to VCC	1110
43K to VCC	1111

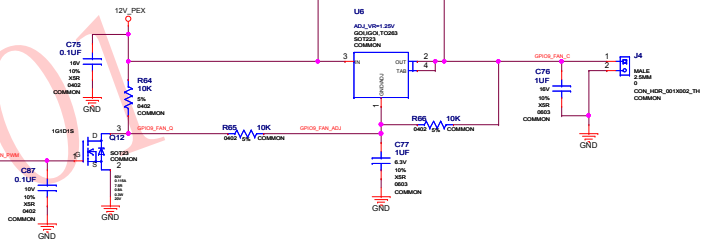

VSIS-RMA 黃錦萍 20100604

ASSEMBLY	BASE LEVEL GENERIC SCHEMATIC ONLY, COMMON & NO_STUFF ASSEMBLY NOTES AND BOM NOT FINAL
PAGE DETAIL	Thermal Protection, Protected 3V3, Straps, Fan PWM

ALL NVIDIA DESIGN SPECIFICATIONS, REFERENCE SPECIFICATIONS, REFERENCE BOARDS, FILES, DRAWINGS, DIAGNOSTICS, LISTS AND OTHER DOCUMENTS OR INFORMATION (TOGETHER AND SEPARATELY, 'MATERIALS') ARE BEING PROVIDED 'AS IS'. THE MATERIALS MAY CONTAIN KNOWN AND UNKNOWN VIOLATIONS OR DEVIATIONS OF INDUSTRY STANDARDS AND SPECIFICATIONS. NVIDIA MAKES NO WARRANTIES, EXPRESSED, IMPLIED, STATUTORY OR OTHERWISE WITH RESPECT TO THE MATERIALS OR OTHERWISE, AND EXPRESSLY DISCLAIMS ALL IMPLIED WARRANTIES INCLUDING, WITHOUT LIMITATION, THE WARRANTIES OF DESIGN, OF NONINFRINGEMENT, MERCHANTABILITY OR FITNESS FOR A PARTICULAR PURPOSE, OR ARISING FROM A COURSE OF DEALING, TRADE USAGE, TRADE PRACTICE, OR INDUSTRY STANDARDS.

NVIDIA CORPORATION
2701 SAN TOMAS EXPRESSWAY
SANTA CLARA, CA 95050, USA

NV_PN	600-10873-BASE-000		
PCB REV	P873-A01	PAGE	
BOM REV	A	DATE	26-FEB-2010

Power Supply I: PEX_VDD, 5V, 3V3

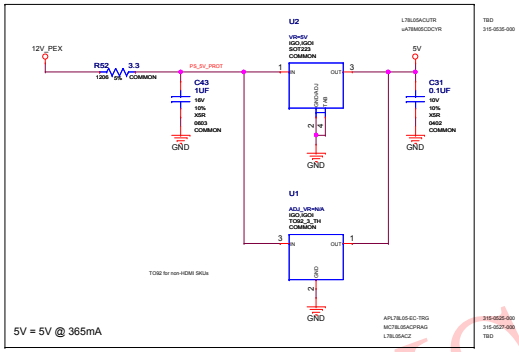

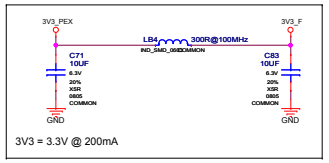

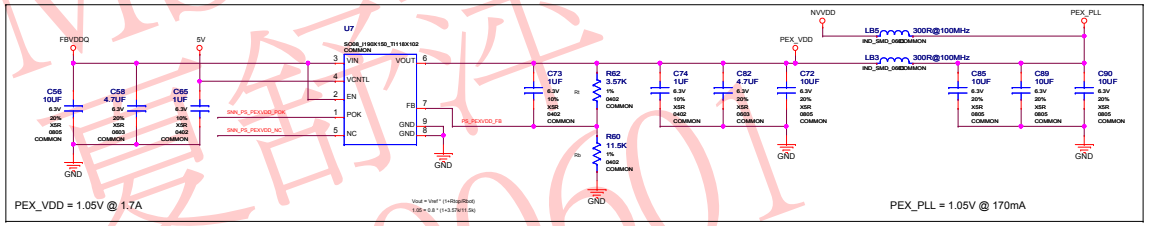

MSIS-RMA
20100601

Net Name	MIN_WIDTH	MAX_WIDTH
PS_PEXPLL_ADJ	12MIL	
PS_5V_PROT	12MIL	
PS_PEXVDD_DR	12MIL	
PS_PEXVDD_FB	12MIL	

Net Name	VOLTAGE	MAX_CURRENT	
5V	5V	0.365A	12MIL
PEX_PLL	1.05V	0.170A	12MIL
PEX_VDD	1.05V	1.7A	16MIL
3V3_F	3.3V	0.5A	12MIL

ASSEMBLY	BASE LEVEL GENERIC SCHEMATIC ONLY, COMMON & NO_STUFF ASSEMBLY NOTES AND BOM NOT FINAL
PAGE DETAIL	Power Supply I: PEX_VDD, 5V, 3V3

ALL NVIDIA DESIGN SPECIFICATIONS, REFERENCE SPECIFICATIONS, REFERENCE BOARDS, FILES, DRAWINGS, DIAGNOSTICS, LISTS AND OTHER DOCUMENTS OR INFORMATION (TOGETHER AND SEPARATELY, 'MATERIALS') ARE BEING PROVIDED 'AS IS'. THE MATERIALS MAY CONTAIN KNOWN AND UNKNOWN VIOLATIONS OR DEVIATIONS OF INDUSTRY STANDARDS AND SPECIFICATIONS. NVIDIA MAKES NO WARRANTIES, EXPRESSED, IMPLIED, STATUTORY OR OTHERWISE WITH RESPECT TO THE MATERIALS OR OTHERWISE, AND EXPRESSLY DISCLAIMS ALL IMPLIED WARRANTIES INCLUDING, WITHOUT LIMITATION, THE WARRANTIES OF DESIGN, OF NONINFRINGEMENT, MERCHANTABILITY OR FITNESS FOR A PARTICULAR PURPOSE, OR ARISING FROM A COURSE OF DEALING, TRADE USAGE, TRADE PRACTICE, OR INDUSTRY STANDARDS.

NVIDIA CORPORATION
2701 SAN TOMAS EXPRESSWAY
SANTA CLARA, CA 95050, USA

NV_PN	600-10873-BASE-000		
PCB REV	P873-A01	PAGE	
BOM REV	A	DATE	26-FEB-2010

Power Supply II: FBVDD/Q

Net Name	MIN_WIDTH	MAX_WIDTH
PS_FBVDD_NV		
PS_FBVDD_EN'		
PS_FBVDD_EN	12MIL	
PS_FBVDD_VCC	12MIL	
PS_FBVDD_BOOT	12MIL	
PS_FBVDD_BOOT_RC	12MIL	
PS_FBVDD_UG	16MIL	
PS_FBVDD_UG_R	16MIL	
PS_FBVDD_LG	16MIL	
PS_FBVDD_PHASE	16MIL	
PS_FBVDD_RC	16MIL	
PS_FBVDD_FB	12MIL	
PS_FBVDD_FB_RC	12MIL	
PS_FBVDD_CP_RC	12MIL	

Net Name	VOLTAGE	MAX_CURRENT
FBVDDQ	1.5V	3A 20MIL

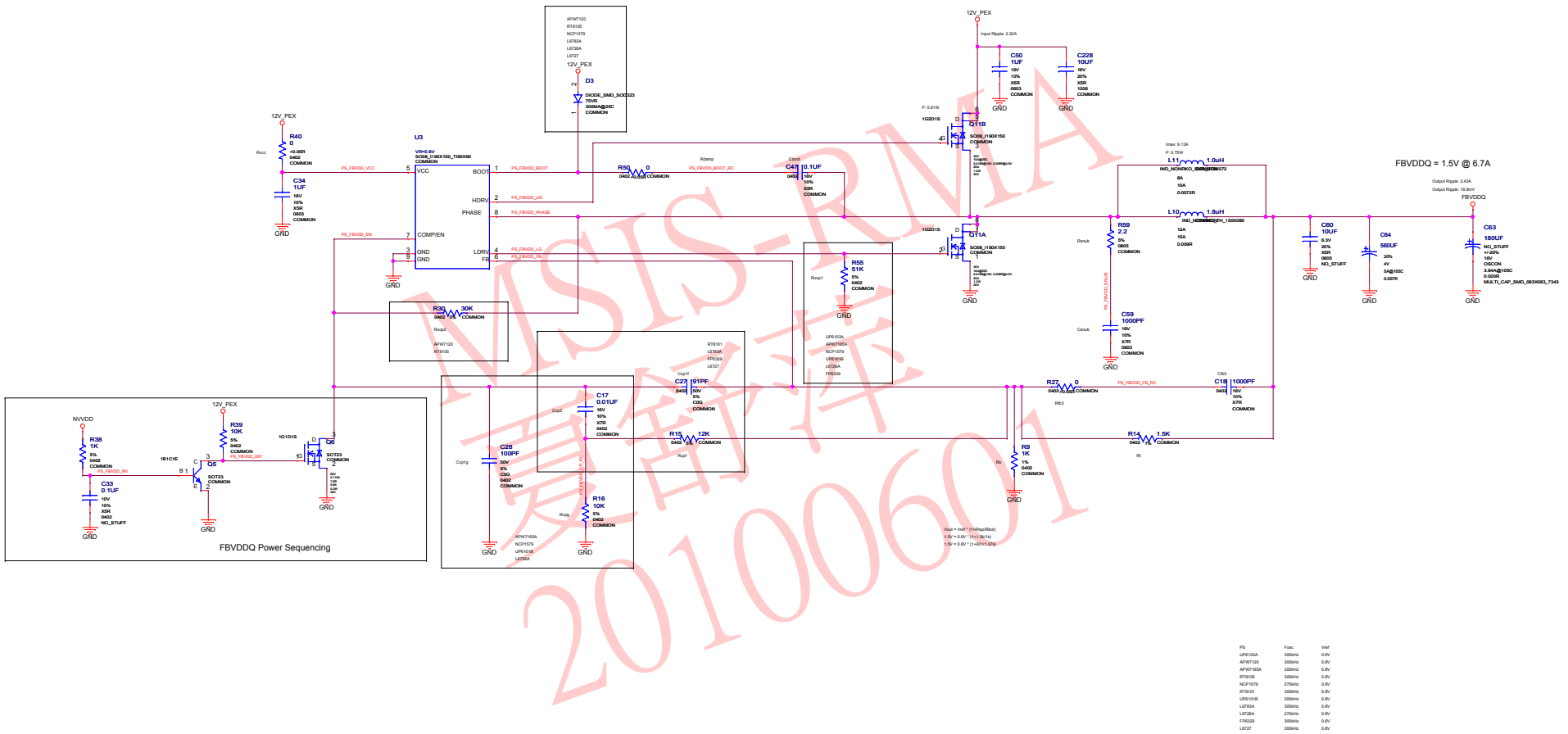

PS	Fosc	Vref
UP6103A	300kHz	0.6V
APW7120	300kHz	0.8V
APW7165A	300kHz	0.8V
RT8105	300kHz	0.8V
NCP1579	275kHz	0.8V
RT8101	300kHz	0.8V
UP6101B	300kHz	0.8V
L6783A	300kHz	0.8V
L6726A	270kHz	0.8V
FP6329	300kHz	0.6V
L6727	300kHz	0.8V

ASSEMBLY	BASE LEVEL GENERIC SCHEMATIC ONLY, COMMON & NO_STUFF ASSEMBLY NOTES AND BOM NOT FINAL
PAGE DETAIL	Power Supply II: FBVDD/Q

ALL NVIDIA DESIGN SPECIFICATIONS, REFERENCE SPECIFICATIONS, REFERENCE BOARDS, FILES, DRAWINGS, DIAGNOSTICS, LISTS AND OTHER DOCUMENTS OR INFORMATION (TOGETHER AND SEPARATELY, 'MATERIALS') ARE BEING PROVIDED 'AS IS'. THE MATERIALS MAY CONTAIN KNOWN AND UNKNOWN VIOLATIONS OR DEVIATIONS OF INDUSTRY STANDARDS AND SPECIFICATIONS. NVIDIA MAKES NO WARRANTIES, EXPRESSED, IMPLIED, STATUTORY OR OTHERWISE WITH RESPECT TO THE MATERIALS OR OTHERWISE, AND EXPRESSLY DISCLAIMS ALL IMPLIED WARRANTIES INCLUDING, WITHOUT LIMITATION, THE WARRANTIES OF DESIGN, OF NONINFRINGEMENT, MERCHANTABILITY OR FITNESS FOR A PARTICULAR PURPOSE, OR ARISING FROM A COURSE OF DEALING, TRADE USAGE, TRADE PRACTICE, OR INDUSTRY STANDARDS.

NVIDIA CORPORATION
2701 SAN TOMAS EXPRESSWAY
SANTA CLARA, CA 95050, USA

NV_PN	600-10873-BASE-000		
PCB REV	P873-A01	PAGE	
BOM REV	A	DATE	26-FEB-2010

MSIS-RMA 查看序号 20100601

Power Supply III: NVVDD

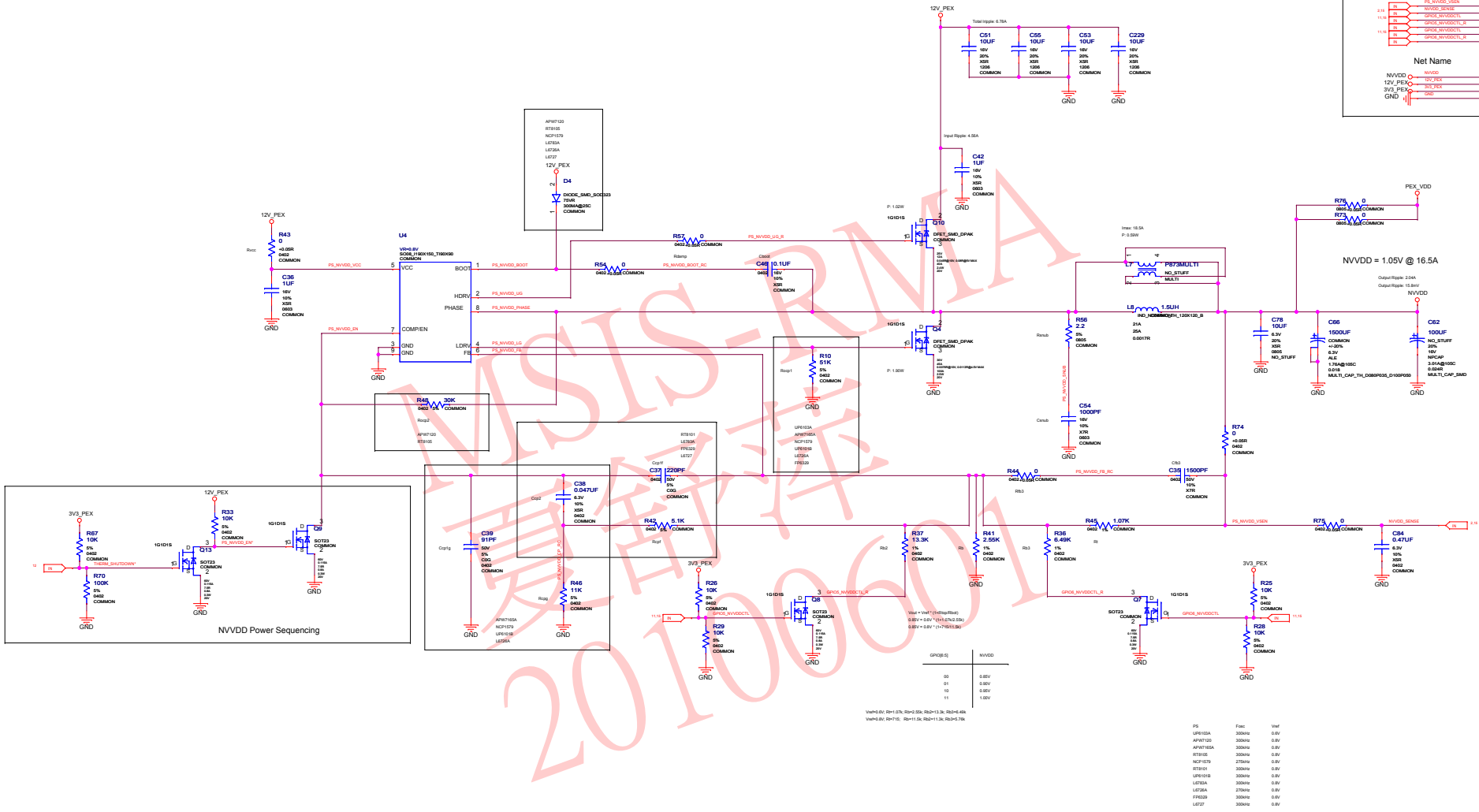

Net Name | MIN_WIDTH | MAX_WIDTH

PS_NVVDD_EN* 12MIL
PS_NVVDD_EN 12MIL
PS_NVVDD_VCC 12MIL
PS_NVVDD_BOOT 12MIL
PS_NVVDD_BOOT_RC 12MIL
PS_NVVDD_UG 18MIL
PS_NVVDD_UG_R 18MIL
PS_NVVDD_LG 18MIL
PS_NVVDD_PHASE 18MIL
PS_NVVDD_SNUB 18MIL
PS_NVVDD_FB 12MIL
PS_NVVDD_FB_RC 12MIL
PS_NVVDD_CP_RC 12MIL
PS_NVVDD_VSEN 12MIL
NVVDD_SENSE 12MIL
GPIO5_NVVDDCTL 12MIL
GPIO5_NVVDDCTL_R 12MIL
GPIO6_NVVDDCTL 12MIL
GPIO6_NVVDDCTL_R 12MIL

Net Name | VOLTAGE | MAX_CURRENT

NVVDD 1.05V 16A 16MIL
12V_PEX 12V 3A 16MIL
3V3_PEX 3.3V 3A 16MIL
GND 0V 16MIL

MSIS-RMA 20100601 黃錦祥

ASSEMBLY	BASE LEVEL GENERIC SCHEMATIC ONLY, COMMON & NO_STUFF ASSEMBLY NOTES AND BOM NOT FINAL
PAGE DETAIL	Power Supply III: NVVDD

ALL NVIDIA DESIGN SPECIFICATIONS, REFERENCE SPECIFICATIONS, REFERENCE BOARDS, FILES, DRAWINGS, DIAGNOSTICS, LISTS AND OTHER DOCUMENTS OR INFORMATION (TOGETHER AND SEPARATELY, 'MATERIALS') ARE BEING PROVIDED 'AS IS'. THE MATERIALS MAY CONTAIN KNOWN AND UNKNOWN VIOLATIONS OR DEVIATIONS OF INDUSTRY STANDARDS AND SPECIFICATIONS. NVIDIA MAKES NO WARRANTIES, EXPRESSED, IMPLIED, STATUTORY OR OTHERWISE WITH RESPECT TO THE MATERIALS OR OTHERWISE, AND EXPRESSLY DISCLAIMS ALL IMPLIED WARRANTIES INCLUDING, WITHOUT LIMITATION, THE WARRANTIES OF DESIGN, OF NONINFRINGEMENT, MERCHANTABILITY OR FITNESS FOR A PARTICULAR PURPOSE, OR ARISING FROM A COURSE OF DEALING, TRADE USAGE, TRADE PRACTICE, OR INDUSTRY STANDARDS.

NVIDIA CORPORATION
2701 SAN TOMAS EXPRESSWAY
SANTA CLARA, CA 95050, USA

NV_PN	600-10873-BASE-000		
PCB REV	P873-A01	PAGE	
BOM REV	A	DATE	26-FEB-2010

Title: Basenet Report
Design: p873
Date: Oct 22 12:17:05 2009

Base nets and synonyms for
p873_lib.P873(@p873_lib.p873(sch_1))
Base Signal Location([Zone][dir])

3V3_F 13.1H
3V3_PEX 15.2H
3V3_PROT 12.2H
5V 13.1H
12V_PEX 15.2H
DACA_BLUE 6.1G< 6.4C
DACA_BLUE_C 6.1G< 6.5F> 8.3F<
DACA_GREEN 6.1G< 6.4C
DACA_GREEN_C 6.1G< 6.4F> 8.3F<
DACA_HSYNC 6.1G< 6.4C
DACA_HSYNC_C 6.1G> 6.3F> 8.3F<
DACA_HS_BUF 6.1G< 6.3D
DACA_RED 6.1G< 6.4C
DACA_RED_C 6.1G< 6.4F> 8.3F<
DACA_RSET 6.1G< 6.4B
DACA_VREF 6.1G< 6.4B
DACA_VSYNC 6.1G< 6.4C
DACA_VSYNC_C 6.1G> 6.3F> 8.3F<
DACA_VS_BUF 6.1G< 6.3D
DACB_BLUE 7.1G< 7.4C
DACB_BLUE_C 7.1G< 7.5E
DACB_GREEN 7.1G< 7.4C
DACB_GREEN_C 7.1G< 7.4E
DACB_HSYNC 7.1G< 7.4C
DACB_HSYNC_C 7.1G< 7.3E
DACB_HS_BUF 7.1G< 7.3D
DACB_RED 7.1G< 7.4C
DACB_RED_C 7.1G< 7.4E
DACB_RSET 7.1G< 7.4B
DACB_VREF 7.1G< 7.4B
DACB_VSYNC 7.1G< 7.4C
DACB_VSYNC_C 7.1G< 7.3E
DACB_VS_BUF 7.1G< 7.3D
DAC_VDD 6.2G< 6.3B> 7.3A<
9.2A<
FBA_CLK0 3.1G> 3.4D< 4.2A<
4.2B< 4.2D< 4.2F<
4.5C<
FBA_CLK0* 3.1G> 3.4D> 4.2A<
4.2B< 4.2D< 4.2F<
4.5C<
FBA_CLK0_T 4.5D
FBA_CLK1 3.1G> 3.4D> 5.2A<
5.2B< 5.2D< 5.2F<
5.5C<
FBA_CLK1* 3.1G> 3.4D> 5.2A<
5.2B< 5.2D< 5.2F<
5.5C<
FBA_CLK1_T 5.5D
FBA_CMD<0> 3.2C 3.4G 4.2A 4.2C
4.2E 4.2F
FBA_CMD<30..0> 3.1G> 3.2D> 4.1A<
5.1A<
FBA_CMD<1> 3.2C 3.3G 4.1A 4.1C
4.1E 4.1F 5.1A 5.1C
5.1E 5.1F
FBA_CMD<2> 3.2C 3.4G 4.2A 4.2C
4.2E 4.2F
FBA_CMD<3> 3.2C 3.3G 4.2A 4.2C
4.2E 4.2F 5.2A 5.2C
5.2E 5.2F
FBA_CMD<4> 3.2C 3.4G 3.5G 5.2A
5.2C 5.2E 5.2F
FBA_CMD<5> 3.3C 3.4G 3.5G 5.2A
5.2C 5.2E 5.2F
FBA_CMD<6> 3.3C 3.4G 3.5G 5.2A
5.2C 5.2E 5.2F
FBA_CMD<7> 3.3C 3.3F 5.2A 5.2C
5.2E 5.2F
FBA_CMD<8> 3.3C 3.5G 3.5G 5.2A
5.2C 5.2E 5.2F
FBA_CMD<9> 3.3C 3.3G 4.2A 4.2C
4.2E 4.2F 5.2A 5.2C
5.2E 5.2F
FBA_CMD<10> 3.3C 3.3G 4.2A 4.2C
4.2E 4.2F 5.2A 5.2C
5.2E 5.2F
FBA_CMD<11> 3.3C 3.3G 4.2A 4.2C
4.2E 4.2F 5.2A 5.2C
5.2E 5.2F
FBA_CMD<12> 3.3C 3.3G 4.2A 4.2C
4.2E 4.2F 5.2A 5.2C
5.2E 5.2F
FBA_CMD<13> 3.3C 3.5G 3.5G 5.2A
5.2C 5.2E 5.2F
FBA_CMD<14> 3.3C 3.3G 4.2A 4.2C
4.2E 4.2F 5.2A 5.2C
5.2E 5.2F

FBA_CMD<15> 3.3C 3.3E 4.3A 4.3C
4.3E 4.3F 5.3A 5.3C
5.3E 5.3F
FBA_CMD<16> 3.3C 3.3G 4.2A 4.2C
4.2E 4.2F 5.2A 5.2C
5.2E 5.2F
FBA_CMD<17> 3.3C 3.3G 4.2A 4.2C
4.2E 4.2F 5.2A 5.2C
5.2E 5.2F
FBA_CMD<18> 3.3C 3.3F 4.2A 4.2C
4.2E 4.2F
FBA_CMD<19> 3.3C 3.3G 4.2A 4.2C
4.2E 4.2F 5.2A 5.2C
5.2E 5.2F
FBA_CMD<20> 3.3C 3.3G 4.2A 4.2C
4.2E 4.2F 5.2A 5.2C
5.2E 5.2F
FBA_CMD<21> 3.3C 3.3G 4.2A 4.2C
4.2E 4.2F 5.2A 5.2C
5.2E 5.2F
FBA_CMD<22> 3.3C 3.3G 4.2A 4.2C
4.2E 4.2F
FBA_CMD<23> 3.3C 3.3G 4.2A 4.2C
4.2E 4.2F 5.2A 5.2C
5.2E 5.2F
FBA_CMD<24> 3.3C 3.4G 4.2A 4.2C
4.2E 4.2F
FBA_CMD<25> 3.3C 3.3G 4.2A 4.2C
4.2E 4.2F 5.2A 5.2C
5.2E 5.2F
FBA_CMD<26> 3.3C 3.4G 4.2A 4.2C
4.2E 4.2F 5.2A 5.2C
5.2E 5.2F
FBA_CMD<27> 3.3C 3.3G 4.2A 4.2C
4.2E 4.2F 5.2A 5.2C
5.2E 5.2F
FBA_CMD<28> 3.3C 3.5A 5.3A 5.3C
5.3E 5.3F
FBA_CMD<29> 3.3C 3.4G 4.2A 4.2C
4.2E 4.2F
FBA_CMD<30> 3.3C 3.3F 4.3A 4.3C
4.3E 4.3F
FBA_D<0> 3.1B 4.4B
FBA_D<63..0> 3.1A<> 3.1G<> 4.4A<>
5.4A<>
FBA_D<1> 3.1B 4.4B
FBA_D<2> 3.1B 4.4B
FBA_D<3> 3.1B 4.4B
FBA_D<4> 3.1B 4.4B
FBA_D<5> 3.1B 4.4B
FBA_D<6> 3.1B 4.4B
FBA_D<7> 3.1B 4.4B
FBA_D<8> 3.1B 4.4C
FBA_D<9> 3.1B 4.4C
FBA_D<10> 3.1B 4.4C
FBA_D<11> 3.2B 4.4C
FBA_D<12> 3.2B 4.4C
FBA_D<13> 3.2B 4.4C
FBA_D<14> 3.2B 4.4C
FBA_D<15> 3.2B 4.4C
FBA_D<16> 3.2B 4.4D
FBA_D<17> 3.2B 4.4D
FBA_D<18> 3.2B 4.4D
FBA_D<19> 3.2B 4.4D
FBA_D<20> 3.2B 4.4D
FBA_D<21> 3.2B 4.4D
FBA_D<22> 3.2B 4.4D
FBA_D<23> 3.2B 4.4D
FBA_D<24> 3.2B 4.4E
FBA_D<25> 3.2B 4.4E
FBA_D<26> 3.2B 4.4E
FBA_D<27> 3.2B 4.4E
FBA_D<28> 3.2B 4.4E
FBA_D<29> 3.2B 4.4E
FBA_D<30> 3.2B 4.4E
FBA_D<31> 3.2B 4.4E
FBA_D<32> 3.2B 5.4B
FBA_D<33> 3.2B 5.4B
FBA_D<34> 3.2B 5.4B
FBA_D<35> 3.2B 5.4B
FBA_D<36> 3.2B 5.4B
FBA_D<37> 3.2B 5.4B
FBA_D<38> 3.2B 5.4B
FBA_D<39> 3.2B 5.4B
FBA_D<40> 3.2B 5.4C
FBA_D<41> 3.3B 5.4C
FBA_D<42> 3.3B 5.4C
FBA_D<43> 3.3B 5.4C
FBA_D<44> 3.3B 5.4C
FBA_D<45> 3.3B 5.4C
FBA_D<46> 3.3B 5.4C
FBA_D<47> 3.3B 5.4C
FBA_D<48> 3.3B 5.4D
FBA_D<49> 3.3B 5.4D
FBA_D<50> 3.3B 5.4D
FBA_D<51> 3.3B 5.4D

FBA_D<52> 3.3B 5.4D
FBA_D<53> 3.3B 5.4D
FBA_D<54> 3.3B 5.4D
FBA_D<55> 3.3B 5.4D
FBA_D<56> 3.3B 5.4E
FBA_D<57> 3.3B 5.4E
FBA_D<58> 3.3B 5.4E
FBA_D<59> 3.3B 5.4E
FBA_D<60> 3.3B 5.4E
FBA_D<61> 3.3B 5.4E
FBA_D<62> 3.3B 5.4E
FBA_D<63> 3.3B 5.4E
FBA_DEBUG 3.2G< 3.4C
FBA_DQM<0> 3.3B 4.4B
FBA_DQM<7..0> 3.1G> 3.3A> 4.4A<
5.4A<
FBA_DQM<1> 3.3B 4.4C
FBA_DQM<2> 3.3B 4.4D
FBA_DQM<3> 3.3B 4.4E
FBA_DQM<4> 3.3B 5.4B
FBA_DQM<5> 3.4B 5.4C
FBA_DQM<6> 3.4B 5.4D
FBA_DQM<7> 3.4B 5.4E
FBA_DQS_RN<0> 3.1G 3.4B 4.4B
FBA_DQS_RN<7..0> 3.1G<> 3.4A<> 4.4A<>
5.4A<>
FBA_DQS_RN<1> 3.1G 3.4B 4.4C
FBA_DQS_RN<2> 3.1G 3.4B 4.4D
FBA_DQS_RN<3> 3.1G 3.4B 4.4E
FBA_DQS_RN<4> 3.1G 3.4B 5.4B
FBA_DQS_RN<5> 3.1G 3.4B 5.4C
FBA_DQS_RN<6> 3.1G 3.4B 5.4D
FBA_DQS_RN<7> 3.1G 3.4B 5.4E
FBA_DQS_WP<0> 3.1G 3.4B 4.4B
FBA_DQS_WP<7..0> 3.1G<> 3.4A<> 4.4A<>
5.4A<>
FBA_DQS_WP<1> 3.1G 3.4B 4.4C
FBA_DQS_WP<2> 3.1G 3.4B 4.4D
FBA_DQS_WP<3> 3.1G 3.4B 4.4E
FBA_DQS_WP<4> 3.1G 3.4B 5.4B
FBA_DQS_WP<5> 3.1G 3.4B 5.4C
FBA_DQS_WP<6> 3.1G 3.4B 5.4D
FBA_DQS_WP<7> 3.1G 3.4B 5.4E
FBA_ZQ0 4.1G< 4.3A
FBA_ZQ1 4.1G< 4.3C
FBA_ZQ2 4.1G< 4.3E
FBA_ZQ3 4.1G< 4.3F
FBA_ZQ4 5.1G< 5.3A
FBA_ZQ5 5.1G< 5.3C
FBA_ZQ6 5.1G< 5.3E
FBA_ZQ7 5.1G< 5.3F
FBVDDQ 14.1H
FBVTT 3.2G
FB_CAL_PD_VDDQ 3.2G< 3.4C
FB_CAL_PU_GND 3.2G< 3.4C
FB_CAL_TERM_GND 3.2G< 3.4C
FB_PLLAVDD 3.2G< 3.5C
FB_VREF_A 4.1G< 4.3H
FB_VREF_C 5.1G< 5.3H
GPIO0_DVI_A_HPD 8.1G< 8.3D
GPIO0_DVI_A_HPD_C 8.1G< 8.3F
GPIO0_DVI_A_HPD_R 8.1G< 8.3E
GPIO1_IFPC_HPD 9.1G< 9.3D
GPIO1_IFPC_HPD_C 9.1G< 9.2F
GPIO1_IFPC_HPD_R 9.1G< 9.3E
GPIO5_NVVDDCTL 11.2E> 15.1G< 15.4D<
GPIO5_NVVDDCTL_R 15.1G< 15.4E
GPIO6_NVVDDCTL 11.2E> 15.1G< 15.4G<
GPIO6_NVVDDCTL_R 15.1G< 15.4F
GPIO8_THERM_OVERT* 11.2E> 12.1G< 12.2D<
GPIO9_FAN_ADJ 12.1G< 12.4F
GPIO9_FAN_C 12.1G< 12.4G
GPIO9_FAN_PWM 11.2E< 12.1G< 12.4E<
GPIO9_FAN_Q 12.1G< 12.4F
GPU_PLLVDD 11.1G< 11.4C
GPU_TESTMODE 11.2G< 11.3E
I2CA_SCL 6.1G< 6.2C<> 8.3F<
11.1E<
I2CA_SDA 6.1G<> 6.2C<> 8.3F<>
11.1E<>
I2CB_SCL 7.1G< 7.2C< 11.1E>
I2CB_SDA 7.1G<> 7.2C<> 11.1E<>
I2CW_SCL 9.1G< 9.2D
I2CW_SCL_C 9.2F 9.2G<
I2CW_SDA 9.1G< 9.2D
I2CW_SDA_C 9.2F 9.2G<
IFPAB_IOVDD 8.2G< 8.3B
IFPAB_PLLVDD 8.2B 8.2G<
IFPAB_TXC 8.1G< 8.3D
IFPAB_TXC* 8.1G< 8.3D
IFPAB_TXD0 8.1G< 8.2D
IFPAB_TXD0* 8.1G< 8.2D
IFPAB_TXD1 8.1G< 8.2D
IFPAB_TXD1* 8.1G< 8.2D
IFPAB_TXD2 8.1G< 8.2D
IFPAB_TXD2* 8.1G< 8.2D

IFPAB_TXD4 8.1G< 8.3D
IFPAB_TXD4* 8.1G< 8.3D
IFPAB_TXD5 8.1G< 8.3D
IFPAB_TXD5* 8.1G< 8.3D
IFPAB_TXD6 8.1G< 8.3D
IFPAB_TXD6* 8.1G< 8.3D
IFPC_IOVDD 9.2G< 9.3B
IFPC_RSET 9.2B 9.2G<
IFPC_TXC 9.1G< 9.3D
IFPC_TXC* 9.1G< 9.3D
IFPC_TXC_C 9.1G< 9.3F 9.4D
IFPC_TXC_C* 9.1G< 9.3F 9.4D
IFPC_TXD0 9.1G< 9.3D
IFPC_TXD0* 9.1G< 9.3D
IFPC_TXD0_C 9.1G< 9.3F 9.4D
IFPC_TXD0_C* 9.1G< 9.3F 9.4D
IFPC_TXD1 9.1G< 9.3D
IFPC_TXD1* 9.1G< 9.3D
IFPC_TXD1_C 9.1G< 9.3F 9.4D
IFPC_TXD1_C* 9.1G< 9.3F 9.4D
IFPC_TXD2 9.1G< 9.3D
IFPC_TXD2* 9.1G< 9.3D
IFPC_TXD2_C 9.1G< 9.3F 9.4D
IFPC_TXD2_C* 9.1G< 9.3F 9.4D
IFPC_TX_PD 9.2G< 9.4E
JTAG_TCLK 11.1C 11.1G<
JTAG_TDI 11.1C 11.1G<
JTAG_TDO 11.1G< 11.2C
JTAG_TMS 11.1C 11.1G<
JTAG_TRST* 11.1G< 11.2C
NVVDD 15.2H
NVVDD_SENSE 2.4F> 15.1G< 15.4H<
PEX_PLL 13.1H
PEX_PLLVDD_GPU 2.1G< 2.5F
PEX_PRSNT 2.1B 2.1G<
PEX_REFCLK 2.2C 2.5A<
PEX_REFCLK* 2.2C 2.5A<
PEX_RST 12.1G< 12.3C
PEX_RST* 2.2D> 12.1G< 12.2E<
PEX_RST_R* 12.1G< 12.2F
PEX_RX0 2.2C 2.4A<
PEX_RX0* 2.2C 2.4A<
PEX_RX1 2.2C 2.4A<
PEX_RX1* 2.2C 2.4A<
PEX_RX2 2.2C 2.4A<
PEX_RX2* 2.3C 2.4A<
PEX_RX3 2.3C 2.4A<
PEX_RX3* 2.3C 2.4A<
PEX_RX4 2.3C 2.4A<
PEX_RX4* 2.3C 2.4A<
PEX_RX5 2.3C 2.4A<
PEX_RX5* 2.3C 2.4A<
PEX_RX6 2.3C 2.5A<
PEX_RX6* 2.3C 2.5A<
PEX_RX7 2.3C 2.5A<
PEX_RX7* 2.4C 2.5A<
PEX_RX8 2.4C 2.5A<
PEX_RX8* 2.4C 2.5A<
PEX_RX9 2.4C 2.5A<
PEX_RX9* 2.4C 2.5A<
PEX_RX10 2.4C 2.5A<
PEX_RX10* 2.4C 2.5A<
PEX_RX11 2.4C 2.5A<
PEX_RX11* 2.4C 2.5A<
PEX_RX12 2.4C 2.5A<
PEX_RX12* 2.5A< 2.5C
PEX_RX13 2.5A< 2.5C
PEX_RX13* 2.5A< 2.5C
PEX_RX14 2.5A< 2.5C
PEX_RX14* 2.5A< 2.5C
PEX_RX15 2.5A< 2.5C
PEX_RX15* 2.5A< 2.5C
PEX_TERMP 2.1G< 2.5F
PEX_TX0 2.2A< 2.2D
PEX_TX0* 2.2A< 2.2D
PEX_TX1 2.2A< 2.2D
PEX_TX1* 2.2A< 2.2D
PEX_TX2 2.2A< 2.2D
PEX_TX2* 2.2A< 2.3D
PEX_TX3 2.2A< 2.3D
PEX_TX3* 2.2A< 2.3D
PEX_TX4 2.2A< 2.3D
PEX_TX4* 2.2A< 2.3D
PEX_TX5 2.2A< 2.3D
PEX_TX5* 2.2A< 2.3D
PEX_TX6 2.2A< 2.3D
PEX_TX6* 2.2A< 2.3D
PEX_TX7 2.2A< 2.3D
PEX_TX7* 2.2A< 2.3D
PEX_TX8 2.2A< 2.4D
PEX_TX8* 2.2A< 2.4D
PEX_TX9 2.3A< 2.4D
PEX_TX9* 2.3A< 2.4D
PEX_TX10 2.3A< 2.4D
PEX_TX10* 2.3A< 2.4D
PEX_TX11 2.3A< 2.4D

PEX_TX11* 2.3A< 2.4D
PEX_TX12 2.3A< 2.4D
PEX_TX12* 2.3A< 2.4D
PEX_TX13 2.3A< 2.5D
PEX_TX13* 2.3A< 2.5D
PEX_TX14 2.3A< 2.5D
PEX_TX14* 2.3A< 2.5D
PEX_TX15 2.3A< 2.5D
PEX_TX15* 2.3A< 2.5D
PEX_TX00 2.2C 2.3A<
PEX_TX00* 2.2C 2.3A<
PEX_TXX1 2.2C 2.3A<
PEX_TXX1* 2.2C 2.3A<
PEX_TXX2 2.2C 2.3A<
PEX_TXX2* 2.2C 2.3A<
PEX_TXX3 2.3A< 2.3C
PEX_TXX3* 2.3A< 2.3C
PEX_TXX4 2.3A< 2.3C
PEX_TXX4* 2.3A< 2.3C
PEX_TXX5 2.3A< 2.3C
PEX_TXX5* 2.3A< 2.3C
PEX_TXX6 2.3A< 2.3C
PEX_TXX6* 2.3A< 2.3C
PEX_TXX7 2.3A< 2.3C
PEX_TXX7* 2.3C 2.4A<
PEX_TXX8 2.4A< 2.4C
PEX_TXX8* 2.4A< 2.4C
PEX_TXX9 2.4A< 2.4C
PEX_TXX9* 2.4A< 2.4C
PEX_TXX10 2.4A< 2.4C
PEX_TXX10* 2.4A< 2.4C
PEX_TXX11 2.4A< 2.4C
PEX_TXX11* 2.4A< 2.4C
PEX_TXX12 2.4A< 2.4C
PEX_TXX12* 2.4A< 2.4C
PEX_TXX13 2.4A< 2.5C
PEX_TXX13* 2.4A< 2.5C
PEX_TXX14 2.4A< 2.5C
PEX_TXX14* 2.4A< 2.5C
PEX_TXX15 2.4A< 2.5C
PEX_TXX15* 2.4A< 2.5C
PEX_VDD 13.1H
PS_5V_PRO7 13.1G< 13.2B
PS_FBVDD_BOOT 14.1G< 14.2C
PS_FBVDD_BOOT_RC 14.1G< 14.2D
PS_FBVDD_CP_RC 14.1G< 14.4C
PS_FBVDD_EN 14.1G< 14.3B
PS_FBVDD_EN* 14.1G< 14.4B
PS_FBVDD_FB 14.1G< 14.3C
PS_FBVDD_FB_RC 14.1G< 14.3F
PS_FBVDD_LG 14.1G< 14.3C
PS_FBVDD_NV 14.1G< 14.4A
PS_FBVDD_PHASE 14.1G< 14.3C
PS_FBVDD_RC 14.1G<
PS_FBVDD_SNUB 14.3F
PS_FBVDD_UG 14.1G< 14.3C
PS_FBVDD_UG_R 14.1G< 14.2D
PS_FBVDD_VCC 14.1G< 14.2B
PS_FBVTT_ADJ 3.2G< 3.4F
PS_NVVDD_BOOT 15.1G< 15.2C
PS_NVVDD_BOOT_RC 15.1G< 15.2D
PS_NVVDD_CP_RC 15.1G< 15.4C
PS_NVVDD_EN 15.1G< 15.3B
PS_NVVDD_EN* 15.1G< 15.4B
PS_NVVDD_FB 15.1G< 15.3C
PS_NVVDD_FB_RC 15.1G< 15.3F
PS_NVVDD_LG 15.1G< 15.3C
PS_NVVDD_PHASE 15.1G< 15.3C
PS_NVVDD_SNUB 15.1G< 15.3F
PS_NVVDD_UG 15.1G< 15.3C
PS_NVVDD_UG_R 15.1G< 15.2D
PS_NVVDD_VCC 15.1G< 15.2B
PS_NVVDD_VSEN 15.1G< 15.4G
PS_PEXPLL_ADJ 13.1G<
PS_PEXVDD_DR 13.1G<
PS_PEXVDD_FB 13.1G< 13.4D
ROM_CS* 11.2G< 11.3E
ROM_SCLK 11.3E< 12.1G> 12.4A>
12.4B
ROM_SI 11.3E< 12.1G> 12.3A>
12.3B
ROM_SO 11.3E< 12.1G> 12.3A>
12.3B
SNN_3V3_AUX 2.1B
SNN_BUFRST* 11.3E
SNN_CEC 11.3E
SNN_FBA0_NC_A3 4.3A
SNN_FBA0_NC_A7 4.4B
SNN_FBA0_NC_F1 4.2A
SNN_FBA0_NC_F9 4.3A
SNN_FBA0_NC_H1 4.3A
SNN_FBA0_NC_H9 4.3A
SNN_FBA0_NC_J7 4.3A
SNN_FBA1_NC_A3 4.3C
SNN_FBA1_NC_A7 4.4C

SNN_FBA1_NC_F1 4.2C
SNN_FBA1_NC_F9 4.3C
SNN_FBA1_NC_H1 4.3C
SNN_FBA1_NC_H9 4.3C
SNN_FBA1_NC_J7 4.3C
SNN_FBA1_NC_N7 4.2C
SNN_FBA2_NC_A3 4.3E
SNN_FBA2_NC_A7 4.4D
SNN_FBA2_NC_F1 4.2E
SNN_FBA2_NC_F9 4.3E
SNN_FBA2_NC_H1 4.3E
SNN_FBA2_NC_H9 4.3E
SNN_FBA2_NC_J7 4.3E
SNN_FBA2_NC_N7 4.2E
SNN_FBA3_NC_A3 4.3F
SNN_FBA3_NC_A7 4.4E
SNN_FBA3_NC_F1 4.2F
SNN_FBA3_NC_F9 4.3F
SNN_FBA3_NC_H1 4.3F
SNN_FBA3_NC_H9 4.3F
SNN_FBA3_NC_J7 4.3F
SNN_FBA3_NC_N7 4.2F
SNN_FBA4_NC_A3 5.3A
SNN_FBA4_NC_A7 5.4B
SNN_FBA4_NC_F1 5.2A
SNN_FBA4_NC_F9 5.3A
SNN_FBA4_NC_H1 5.3A
SNN_FBA4_NC_H9 5.3A
SNN_FBA4_NC_J7 5.3A
SNN_FBA4_NC_N7 5.2A
SNN_FBA5_NC_A3 5.3C
SNN_FBA5_NC_A7 5.4C
SNN_FBA5_NC_F1 5.2C
SNN_FBA5_NC_F9 5.3C
SNN_FBA5_NC_H1 5.3C
SNN_FBA5_NC_H9 5.3C
SNN_FBA5_NC_J7 5.3C
SNN_FBA5_NC_N7 5.2C
SNN_FBA6_NC_A3 5.3E
SNN_FBA6_NC_A7 5.4D
SNN_FBA6_NC_F1 5.2E
SNN_FBA6_NC_F9 5.3E
SNN_FBA6_NC_H1 5.3E
SNN_FBA6_NC_H9 5.3E
SNN_FBA6_NC_J7 5.3E
SNN_FBA6_NC_N7 5.2E
SNN_FBA7_NC_A3 5.3F
SNN_FBA7_NC_A7 5.4E
SNN_FBA7_NC_F1 5.2F
SNN_FBA7_NC_F9 5.3F
SNN_FBA7_NC_H1 5.3F
SNN_FBA7_NC_H9 5.3F
SNN_FBA7_NC_J7 5.3F
SNN_FBA7_NC_N7 5.2F
SNN_FB_VREF 3.5B
SNN_GPIO2 11.2E
SNN_GPIO3 11.2E
SNN_GPIO4 11.2E
SNN_GPIO7 11.2E
SNN_GPIO10 11.2E
SNN_GPIO11 11.2E
SNN_GPIO12 11.2E
SNN_GPIO13 11.2E
SNN_GPIO14 11.2E
SNN_GPIO15 10.4C
SNN_GPIO16 11.2E
SNN_GPIO17 11.2E
SNN_GPIO18 11.2E
SNN_GPU_AA6 11.2C
SNN_GPU_C15 10.1G
SNN_GPU_D15 10.2G
SNN_GPU_J5 10.2G
SNN_GPU_N3 11.2C
SNN_GPU_T6 11.2C
SNN_GPU_W6 11.2C
SNN_GPU_Y6 11.2C
SNN_HDMI_CEC 9.3F
SNN_HDMI_RESERVED 9.3F
SNN_I2CC_SCL 11.1E
SNN_I2CC_SDA 11.2E
SNN_I2CH_SCL 11.3E
SNN_I2CH_SDA 11.3E
SNN_I2CS_SCL 11.2C
SNN_I2CS_SDA 11.2C
SNN_IFPAB_RSET 8.2B
SNN_IFPAB_TXD3 8.3D
SNN_IFPAB_TXD3* 8.3D
SNN_IFPAB_TXD7 8.3D
SNN_IFPAB_TXD7* 8.3D
SNN_IFPB_TXC 8.3D
SNN_IFPB_TXC* 8.3D
SNN_IFPC_AUX 10.3C
SNN_IFPC_AUX* 10.2C
SNN_IFPC_HPD 10.3C
SNN_IFPC_L0 10.3C
SNN_IFPC_L0* 10.3C

SNN_IFPC_L1 10.3C
SNN_IFPC_L1* 10.3C
SNN_IFPC_L2 10.3C
SNN_IFPC_L2* 10.3C
SNN_IFPC_L3 10.3C
SNN_IFPC_L3* 10.3C
SNN_IFPC_RSET 10.2A
SNN_IFPE_AUX 10.4C
SNN_IFPE_AUX* 10.4C
SNN_IFPE_L0 10.4C
SNN_IFPE_L0* 10.4C
SNN_IFPE_L1 10.4C
SNN_IFPE_L1* 10.4C
SNN_IFPE_L2 10.4C
SNN_IFPE_L2* 10.4C
SNN_IFPE_L3 10.4C
SNN_IFPE_L3* 10.4C
SNN_IFPE_RSET 10.3A
SNN_NVVDD_SENSE 2.4F
SNN_PEX_CLKREQ* 2.1D
SNN_PEX_TSTCLK_OUT 2.2D
SNN_PEX_TSTCLK_OUT 2.2D
*
SNN_PS_PEXVDD_NC 13.4D
SNN_PS_PEXVDD_POK 13.4D
SNN_SPDIF 11.3C
SNN_XTAL_OUTBUFF 11.4E
STRAP0 11.3C< 12.1G> 12.5A>
12.5B
STRAP1 11.3C< 12.1G> 12.4A>
12.4B
STRAP2 11.3C< 12.1G> 12.4A>
12.4B
STRAP_REF0 11.1G< 11.3C
STRAP_REF1 11.1G< 11.3C
THERMDA 11.1C 11.1G<
THERMDC 11.1C 11.1G<
THERM_N 12.1G< 12.2C
THERM_P* 12.1G< 12.2C
THERM_P_Q 12.1G< 12.2B
THERM_SHUTDOWN* 12.1G> 12.2B> 15.4A<
XTAL_IN 11.1G< 11.4C
XTAL_OUT 11.1G< 11.4E
XTAL_SSIN 11.1G< 11.4C

ALL NVIDIA DESIGN SPECIFICATIONS, REFERENCE SPECIFICATIONS, REFERENCE BOARDS, FILES, DRAWINGS, DIAGNOSTICS, LISTS AND OTHER DOCUMENTS OR INFORMATION (TOGETHER AND SEPARATELY, "MATERIALS") ARE BEING PROVIDED "AS IS". THE MATERIALS MAY CONTAIN KNOWN AND UNKNOWN VIOLATIONS OR DEVIATIONS OF INDUSTRY STANDARDS AND SPECIFICATIONS. NVIDIA MAKES NO WARRANTIES, EXPRESSED, IMPLIED, STATUTORY OR OTHERWISE WITH RESPECT TO THE MATERIALS OR OTHERWISE, AND EXPRESSLY DISCLAIMS ALL IMPLIED WARRANTIES INCLUDING, WITHOUT LIMITATION, THE WARRANTIES OF DESIGN, OF NONINFRINGEMENT, MERCHANTABILITY OR FITNESS FOR A PARTICULAR PURPOSE, OR ARISING FROM A COURSE OF DEALING, TRADE USAGE, TRADE PRACTICE, OR INDUSTRY STANDARDS.

ASSEMBLY	BASE LEVEL GENERIC SCHEMATIC ONLY, COMMON & NO_STUFF ASSEMBLY NOTES AND BOM NOT FINAL
PAGE DETAIL	<edit here to insert page detail>

NVIDIA CORPORATION
2701 SAN TOMAS EXPRESSWAY
SANTA CLARA, CA 95050, USA

NV_PN	600-10873-BASE-000		
PCB REV	P873-A01	PAGE	<CON_PAGE_NUM> OF <CON_TOTAL_PAGES>
BOM REV	A	DATE	26-FEB-2010

MSI-RMA 复行清单 20100601

Title: Cref Part Report
Design: p873
Date: Oct 22 12:17:05 2009

BKT1 [10.3D]
C1 [6.4E]
C2 [6.4E]
C3 [6.5E]
C4 [9.2F]
C5 [9.3F]
C6 [9.3E]
C7 [9.3E]
C8 [9.3E]
C9 [9.3E]
C10 [8.2F]
C11 [6.2E]
C12 [6.2E]
C13 [6.5E]
C14 [6.4E]
C15 [6.4E]
C16 [8.4F]
C17 [14.4D]
C18 [14.3F]
C19 [7.2E]
C20 [7.2E]
C21 [7.3F]
C22 [9.3E]
C23 [9.3E]
C24 [9.3E]
C25 [9.3E]
C26 [9.3E]
C27 [14.3D]
C28 [14.4C]
C29 [8.4E]
C30 [8.4E]
C31 [13.2C]
C32 [9.3E]
C33 [14.4A]
C34 [14.3B]
C35 [15.3F]
C36 [15.3B]
C37 [15.3D]
C38 [15.4D]
C39 [15.4C]
C40 [7.4E]
C41 [7.4E]
C42 [15.2E]
C43 [13.2B]
C44 [7.4E]
C45 [7.4E]
C46 [15.2D]
C47 [14.2D]
C48 [7.5E]
C49 [7.5E]
C50 [14.2E]
C51 [15.1E]
C52 [11.3G]
C53 [15.1F]
C54 [15.3F]
C55 [15.1F]
C56 [13.4C]
C57 [2.1B]
C58 [13.4C]
C59 [14.3F]
C60 [14.3G]
C61 [2.1B]
C62 [15.3H]
C63 [14.3H]
C64 [14.3G]
C65 [13.4D]
C66 [15.3G]
C67 [2.1A]
C68 [2.1A]
C69 [11.5C]
C70 [11.5E]
C71 [13.4A]
C72 [13.4F]
C73 [13.4E]
C74 [13.4E]
C75 [12.4F]
C76 [12.4G]
C77 [12.4G]
C78 [15.3G]
C79 [12.2C]
C80 [12.3C]
C81 [12.3F]
C82 [13.4E]
C83 [13.4B]
C84 [15.4G]
C85 [13.4F]
C86 [2.2D]
C87 [12.4E]
C88 [2.2D]

C89 [13.4G]
C90 [13.4G]
C91 [6.3C]
C92 [2.2D]
C93 [2.2D]
C94 [2.2D]
C95 [3.2E]
C96 [2.2D]
C97 [3.5E]
C98 [2.3D]
C99 [2.3D]
C100 [3.5F]
C101 [3.2E]
C102 [4.5D]
C103 [2.3D]
C104 [4.4F]
C105 [2.3D]
C106 [4.3H]
C107 [4.4F]
C108 [2.3D]
C109 [2.3F]
C110 [2.3G]
C111 [9.3B]
C112 [2.3D]
C113 [2.3F]
C114 [2.2G]
C115 [11.4B]
C116 [2.3F]
C117 [2.2F]
C118 [11.4B]
C119 [2.3F]
C120 [9.3B]
C121 [9.2A]
C122 [3.2D]
C123 [2.3D]
C124 [2.2F]
C125 [11.4C]
C126 [3.2D]
C127 [2.3F]
C128 [2.3D]
C129 [11.4C]
C130 [4.4G]
C131 [9.2B]
C132 [2.3F]
C133 [4.4F]
C134 [9.2B]
C135 [3.1D]
C136 [2.2F]
C137 [3.1D]
C138 [9.2B]
C139 [3.1C]
C140 [2.1G]
C141 [4.4F]
C142 [7.4B]
C143 [3.1D]
C144 [3.2D]
C145 [4.4G]
C146 [2.4G]
C147 [3.2C]
C148 [7.4A]
C149 [7.4A]
C150 [8.3B]
C151 [3.5D]
C152 [8.3B]
C153 [4.4F]
C154 [6.4A]
C155 [4.4G]
C156 [3.5C]
C157 [4.4G]
C158 [8.2B]
C159 [6.4B]
C160 [6.4A]
C161 [4.4G]
C162 [8.2B]
C163 [2.2F]
C164 [2.1F]
C165 [2.1F]
C166 [2.1F]
C167 [2.2F]
C168 [4.4G]
C169 [4.4F]
C170 [4.4G]
C171 [2.2F]
C172 [2.5F]
C173 [2.5G]
C174 [2.5F]
C175 [4.4F]
C176 [2.5F]
C177 [2.3D]
C178 [2.4D]
C179 [2.4D]
C180 [2.3D]
C181 [2.4D]
C182 [2.4D]
C183 [2.4D]
C184 [2.4D]

C185 [3.2E]
C186 [4.4F]
C187 [2.4D]
C188 [2.4D]
C189 [2.5D]
C190 [2.4D]
C191 [2.4D]
C192 [2.5D]
C193 [5.4G]
C194 [5.4F]
C195 [5.4G]
C196 [5.4G]
C197 [5.4F]
C198 [5.4F]
C199 [3.5F]
C200 [2.5D]
C201 [2.5D]
C202 [3.5G]
C203 [2.5D]
C204 [2.5D]
C205 [3.5G]
C206 [4.4G]
C207 [5.5D]
C208 [3.5F]
C209 [3.5F]
C210 [5.3H]
C211 [3.4F]
C212 [5.4G]
C213 [5.4F]
C214 [5.4G]
C215 [5.4G]
C216 [5.4F]
C217 [5.4F]
C218 [5.4G]
C219 [5.4F]
C220 [5.4G]
C221 [5.4F]
C222 [3.4E]
C223 [3.4F]
C224 [3.4E]
C225 [3.4F]
C226 [3.5E]
C227 [3.5E]
CN1 [2.3C]
D1 [8.4D]
D2 [9.3E]
D3 [14.2C]
D4 [15.2C]
G1 [2.3E]
G1 [3.3C]
G1 [6.4C]
G1 [7.4C]
G1 [8.3C]
G1 [9.3C]
G1 [10.4B 10.3G 10.3B]
G1 [11.2D 11.3D 11.4D]
J1 [9.3G]
J2 [8.3G]
J3 [7.4G]
J4 [12.4G]
L1 [6.5E]
L2 [6.4E]
L3 [6.4E]
L4 [7.4E]
L5 [7.4E]
L6 [7.5E]
L7 [15.2F]
L8 [15.3F]
L10 [14.3F]
L11 [14.2F]
L12 [2.5G]
LB1 [9.3F]
LB2 [8.4E]
LB3 [13.3F]
LB4 [13.4B]
LB5 [13.3F]
LB6 [3.4F]
LB7 [9.3B]
LB8 [11.4B]
LB9 [8.3B]
LB10 [3.5D]
LB11 [8.2B]
M1 [4.4D 4.2F]
M2 [4.4C 4.2C]
M3 [4.4E 4.2G]
M4 [4.2B 4.4B]
M5 [5.4B 5.2B]
M6 [5.2G 5.4E]
M7 [5.2F 5.4D]
M8 [5.4C 5.2C]
MEC1 [7.4G]
MEC2 [10.4E]
MEC3 [10.3D]
MEC4 [10.3D]

MEC5 [10.2D]
MEC6 [10.3D]
Q1 [9.4E]
Q2 [9.2E]
Q3 [9.2E]
Q4 [15.3E]
Q5 [14.4B]
Q6 [14.4B]
Q7 [15.4F]
Q8 [15.4E]
Q9 [15.4B]
Q10 [15.2E]
Q11 [14.3E 14.2E]
Q12 [12.4F]
Q13 [15.4B]
Q14 [12.2B]
Q15 [12.3C]
Q16 [12.2F]
Q17 [12.2G]
R1 [9.2E]
R2 [9.2E]
R3 [9.4E]
R4 [9.4E]
R5 [9.4E]
R6 [9.4E]
R7 [6.2D]
R8 [6.2D]
R9 [14.4E]
R10 [15.3E]
R11 [6.5E]
R12 [6.4E]
R13 [6.4E]
R14 [14.4F]
R15 [14.4D]
R16 [14.4D]
R17 [7.2D]
R18 [7.2D]
R19 [9.3D]
R20 [9.3E]
R21 [9.4E]
R22 [9.4E]
R23 [9.4E]
R24 [9.4E]
R25 [15.4G]
R26 [15.4D]
R27 [14.3F]
R28 [15.4G]
R29 [15.4D]
R30 [14.3C]
R31 [8.4E]
R32 [9.4G]
R33 [15.4B]
R34 [9.2E]
R35 [9.2E]
R36 [15.4F]
R37 [15.4E]
R38 [14.4A]
R39 [14.4B]
R40 [14.2B]
R41 [15.4E]
R42 [15.4D]
R43 [15.2B]
R44 [15.3F]
R45 [15.4F]
R46 [15.4D]
R47 [7.4E]
R48 [15.3C]
R49 [14.2D]
R50 [14.2D]
R51 [7.4E]
R52 [13.2B]
R53 [7.5E]
R54 [15.2D]
R55 [14.3E]
R56 [15.3F]
R57 [15.2D]
R58 [11.3F]
R59 [14.3F]
R60 [13.4E]
R61 [12.2C]
R62 [13.4E]
R63 [12.3G]
R64 [12.4F]
R65 [12.4F]
R66 [12.4G]
R67 [15.4A]
R68 [12.3C]
R69 [12.2F]
R70 [15.4A]
R71 [12.2C]
R72 [12.3G]
R73 [15.2G]
R74 [15.3G]
R75 [15.4G]
R76 [15.2G]
R77 [7.2D]

R78 [6.2D]
R79 [6.3D]
R80 [12.3B]
R81 [12.2C]
R82 [7.3D]
R83 [7.3D]
R84 [7.3D]
R85 [6.3D]
R86 [12.4B]
R87 [12.4B]
R88 [12.4B]
R89 [12.4B]
R90 [12.4B]
R91 [12.4B]
R92 [6.3D]
R93 [11.5C]
R94 [12.5B]
R95 [12.5B]
R96 [11.3C]
R97 [11.3C]
R98 [12.3B]
R99 [12.3B]
R100 [12.3B]
R101 [12.3B]
R102 [3.3F]
R103 [3.4H]
R104 [3.3F]
R105 [4.5D]
R106 [4.5C]
R107 [4.5D]
R108 [4.4D]
R109 [4.3E]
R110 [4.3H]
R111 [6.3A]
R112 [4.3H]
R113 [11.2C]
R114 [4.3C]
R115 [9.2B]
R116 [7.4B]
R117 [3.5D]
R118 [3.4D]
R119 [3.4D]
R120 [6.4B]
R121 [4.3F]
R122 [2.5F]
R123 [4.3A]
R124 [3.3E]
R125 [11.4E]
R126 [5.3A]
R127 [5.5D]
R128 [5.5C]
R129 [5.5D]
R130 [5.4D]
R131 [3.3F]
R132 [3.4F]
R133 [3.3H]
R134 [3.3F]
R135 [3.4F]
R136 [5.3H]
R137 [3.5H]
R138 [3.5H]
R139 [5.3F]
R140 [5.3E]
R147 [5.3C]
R142 [3.4G]
RP1 [3.4H 3.4H 3.4H 3.4H]
RP2 [3.4H 3.3H 3.3H 3.3H]
RP3 [3.3H 3.3H 3.3H 3.3H]
RP4 [3.3H 3.3H 3.3H 3.3H]
RP5 [3.3H 3.3H 3.3H 3.3H]
RP6 [3.5H 3.5H 3.4H 3.4H]
RP7 [3.5H 3.4H 3.5H 3.5H]
TP501 [11.1C]
TP502 [11.1C]
TP503 [3.4D]
TP504 [11.2C]
TP505 [11.2C]
TP506 [11.2C]
TP507 [11.1C]
TP508 [11.1C]
U1 [13.3C]
U2 [13.2C]
U3 [14.3C]
U4 [15.3C]
U5 [11.3F]
U6 [12.4G]
U7 [13.4D]
U8 [6.3D 6.3D]
U8 [7.3D 7.3D]

U9 [3.4E]
Y1 [11.5D]

MSI-RMA
夏舒萍
20100601

ASSEMBLY	BASE LEVEL GENERIC SCHEMATIC ONLY, COMMON & NO_STUFF ASSEMBLY NOTES AND BOM NOT FINAL
PAGE DETAIL	<edit here to insert page detail>

ALL NVIDIA DESIGN SPECIFICATIONS, REFERENCE SPECIFICATIONS, REFERENCE BOARDS, FILES, DRAWINGS, DIAGNOSTICS, LISTS AND OTHER DOCUMENTS OR INFORMATION (TOGETHER AND SEPARATELY, 'MATERIALS') ARE BEING PROVIDED 'AS IS'. THE MATERIALS MAY CONTAIN KNOWN AND UNKNOWN VIOLATIONS OR DEVIATIONS OF INDUSTRY STANDARDS AND SPECIFICATIONS. NVIDIA MAKES NO WARRANTIES, EXPRESSED, IMPLIED, STATUTORY OR OTHERWISE WITH RESPECT TO THE MATERIALS OR OTHERWISE, AND EXPRESSLY DISCLAIMS ALL IMPLIED WARRANTIES INCLUDING, WITHOUT LIMITATION, THE WARRANTIES OF DESIGN, OF NONINFRINGEMENT, MERCHANTABILITY OR FITNESS FOR A PARTICULAR PURPOSE, OR ARISING FROM A COURSE OF DEALING, TRADE USAGE, TRADE PRACTICE, OR INDUSTRY STANDARDS.

NVIDIA CORPORATION
2701 SAN TOMAS EXPRESSWAY
SANTA CLARA, CA 95050, USA

NV_PN	600-10873-BASE-000		
PCB REV	P873-A01	PAGE	<CON_PAGE_NUM> OF <CON_TOTAL_PAGES>
BOM REV	A	DATE	26-FEB-2010