NV11, 1/2/4MX32 DDR, RGB, INTERNAL DVI-I, TV, AGP.

PCI DEVICE ID 0X0=0X112 FOR NV11.

STRAPS: AGP4X, SIDEBAND DIS, FAST WRITE ENA, ADP BIOS, NORMAL PCIAD, 14.318MHZ
STRAP_RAM_TYPE [5:2]=1011-1MX32 DDR SDRAM

01. List of Schematic sheets
02. HOST INTERFACE_NEW
03. FB(MEMORY)/NVXX DECOUPLING
04. NVXX BOOT STRAPS
05. DAC and MEDIA PORT
06. LOWER SDRAM FBI
07. BT & CH TV ENCODER
08. DFP/DVI/CLK_DVR
09. DC-DC CONVTR

HISTORY REV. :

1) Based on P39-A00

2) Schematic changes; role rev to B00
   -remove BT device
   -strap resistor changes
   -add/remove resistors and caps
   -remove high dropout reg (u514)
   - R502 changed from 20K to 10K

3) C00:
   - Swapped LVDS signals back to "Rev A connections".

   - Hi Freq. cap arrays Decoupled to GND:
   1) SMB_CLK
   2) SMB_DAT
   3) PID2_I2C_CLK (aka I2CSCL)
   4) PID3_I2C_DAT (aka I2CSDA)
   5) PID3_I2CDAT (aka PID3)
   6) PID2_I2CCLK (aka PID2)
   7) PID1
   8) PID0

   - Added 10K, NO STUFF, from AGP_BUSY# to +3.3VSUS.

   - Connected C279 to +5VSUS.

4) D00:
   A) Power U513 from +3.3vsus instead of +3.3vrun.
   B) Changed R68 to 10K. Change R69 to 9.09K (to decrease static current draw in +2.5v regulator circuit)
   C) (layout change) Moved MVREF divider & caps (R172, R175, C424, C426) next to the RAMs
   D) Added 0-Ohm STUFF OPTION resistors for memory core FBVDD to go from either +3.3VSUS or +2.5V.
   E) Moved C836, C837, C247, C248, C270 to FBVDD
   F) Removed R166 & R126 (DFPCLK is unused)
   G) Moved pin 1 of R501 from +5vsus to +5vrun
   H) (layout change) Split 5vsus bus into +5vrun and +5vsus
   I) Added a NOSTUFF zero ohm resistor from DFP3.3V to +3.3VRUN (adds option to remove dfp regulator
   J) Added a .022uF cap in parallel with R550 (Increase power sequencing delay)
   K) Changed C57 to 330uF, d-size case
   L) Changed C828 is 330uF, d-size case
   M) (layout change) Moved IMI530 part (designator u1) to fix shorting problem
   N) (layout change) Connected J1 connector shield to ground
   O) (layout change) Connected mounting holes to ground. Don't plate inside of hole to allow for pimnut
   Q) Route VDDEN (GPIO3) to pin 166 on connector J10 (FPVCC)
   P) Added 2 Standoffs (1 metal, 1 plastic) and thermal pad per Dell's request.
   R) Connected pin 24 of J10 (ZV_PCLK) to pin B4 (VIPPCLK) on U29 (NV11)
   S) Created +5VRUN net, connect to pin 168 on J10 (+5VRUN)
   T) R155 = 357ohm, R150 is no-stuff
   U) Removed R152. Connected CHTVPIO_1 to CHTVPIO_0.
   V) Adjusted PCB form factor
   W) Changed R548 from 400K 5% to standard 390K 5%
   X) Changed R550 from 600K 5% to standard 620K 5%
   Y) Configured memory to 2Mx32-1001b (R524=NO STUFF, R523= STUFF
   Z) Changed R154, R156 to 10K.

5) E00:
   - Implemented ECO change list "P41_D00_ECOs-X02.doc" in
   current working directory:
   \\nvcorp\applied\designs\working\nv11\XXX-P0041-0000-E00
   - Sync'd up netlist with Layout.
   - Connect the S0 input of the IMISM530 to 3.3VRUN instead of CLK_VDD

6) E02:
   - Added 1000pf cap (C535) in parallel to R535 for EMI supression.
   - Changed mem termination from +3.3VRUN to +3.3VSUS. Affects R183-R186, C416

6a) E02-X01: Change C279 to no stuff per Dell request.

7) E03: Added SMD0603 foot print to the backside of board, C536 to DVI, DFP page.

{Item}\t{Quantity}\t{Reference}\t{USR DFINE}\t{PN}\t{Assembly}\t{Value}
{Assembly}{Source Package} {Value}{PN}{AVL1}{AVL2}{AVL3}{AVL4}{AVL5}

Micro-Star International Co., LTD.
MS8832,1/2/4MX32-DDR,TV

Size	Document Number	Rev
C	List of schematic sheets	100

Date: Tuesday, April 30, 2002 | Sheet 1 of 9

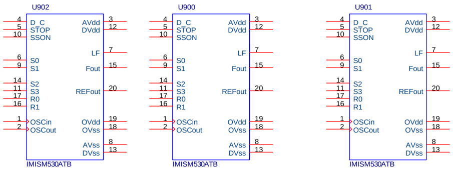
U902
U900
U901
D_C
STOP
SSON
S0
S1
S2
S3
R0
R1
OSCin
OSCout
AVdd
DVdd
LF
Fout
REFout
OVdd
OVss
AVss
DVss
4
5
10
6
9
14
11
17
16
1
2
3
12
7
15
20
19
18
8
13
IMISM530ATB

Title
<Title>

Size	Document Number	Rev
C	<Doc>	<RevCode>

Date: Tuesday, April 30, 2002 Sheet 1 of 1

In all cases each capacitor should be low ESR/ESL and placed as close as possible to the respective rail connector pin(s).

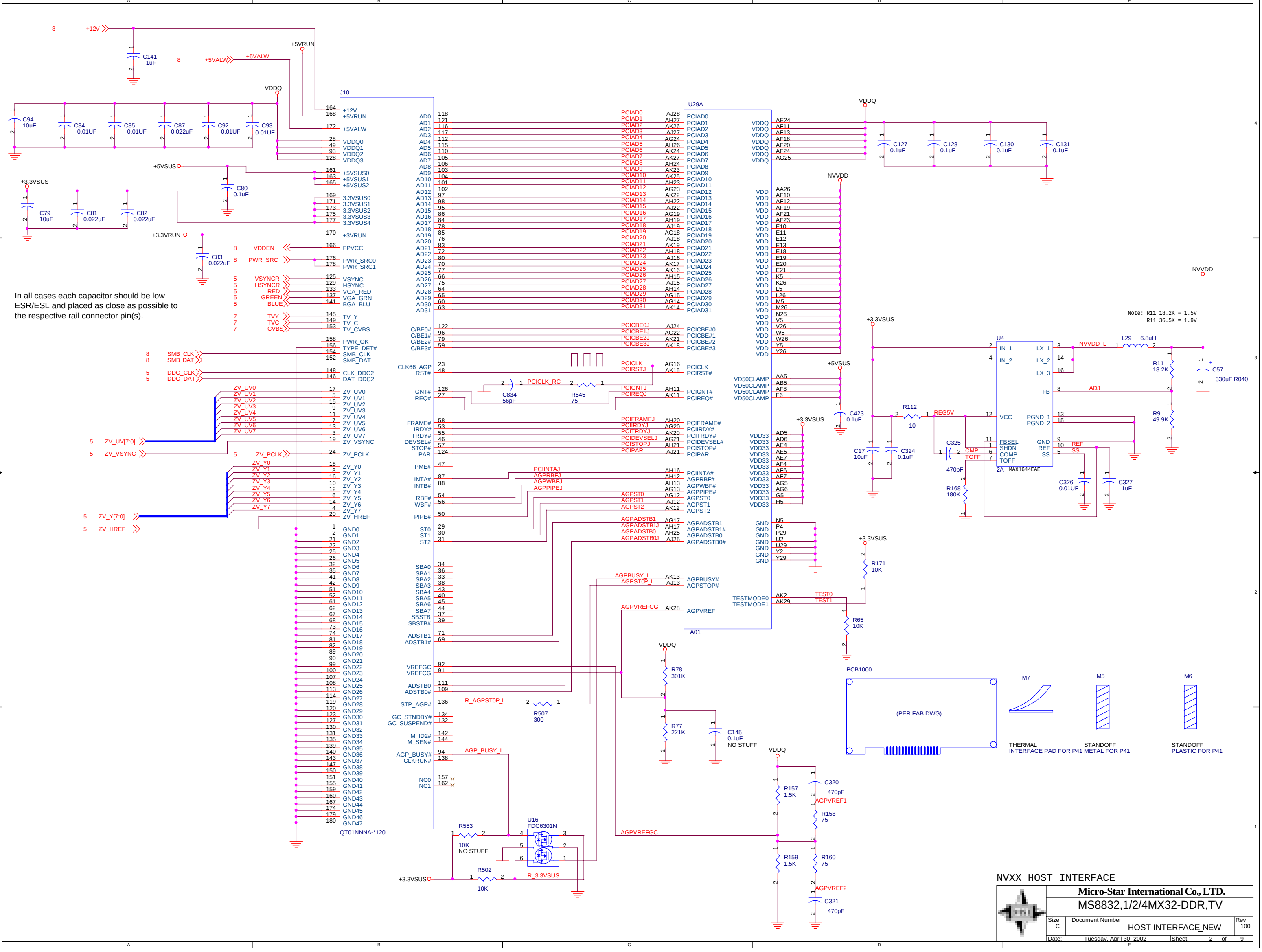

+12V
+5VRUN
+5VALW
VDDQ
+5VSUS
+3.3VSUS
+3.3VRUN
NVVDD
C141 1uF
C94 10uF
C84 0.01UF
C85 0.01UF
C87 0.022uF
C92 0.01UF
C93 0.01UF
C80 0.1uF
C79 10uF
C81 0.022uF
C82 0.022uF
C83 0.022uF
J10
QT01NNNA-*120
+12V
+5VRUN
+5VALW
VDDQ0
VDDQ1
VDDQ2
VDDQ3
+5VSUS0
+5VSUS1
+5VSUS2
3.3VSUS0
3.3VSUS1
3.3VSUS2
3.3VSUS3
3.3VSUS4
+3VRUN
FPVCC
PWR_SRC0
PWR_SRC1
VSYNC
HSYNC
VGA_RED
VGA_GRN
BGA_BLU
TV_Y
TV_C
TV_CVBS
PWR_OK
TYPE_DET#
SMB_CLK
SMB_DAT
CLK_DDC2
DAT_DDC2
ZV_UV0
ZV_UV1
ZV_UV2
ZV_UV3
ZV_UV4
ZV_UV5
ZV_UV6
ZV_UV7
ZV_VSYNC
ZV_PCLK
ZV_Y0
ZV_Y1
ZV_Y2
ZV_Y3
ZV_Y4
ZV_Y5
ZV_Y6
ZV_Y7
ZV_HREF
GND0 … GND47
VDDEN
PWR_SRC
VSYNCR
HSYNCR
RED
GREEN
BLUE
TVY
TVC
CVBS
SMB_CLK
SMB_DAT
DDC_CLK
DDC_DAT
ZV_UV[7:0]
ZV_VSYNC
ZV_Y[7:0]
ZV_HREF
AD0 … AD31
C/BE0#
C/BE1#
C/BE2#
C/BE3#
CLK66_AGP
RST#
GNT#
REQ#
FRAME#
IRDY#
TRDY#
DEVSEL#
STOP#
PAR
PME#
INTA#
INTB#
RBF#
WBF#
PIPE#
ST0
ST1
ST2
SBA0 … SBA7
SBSTB
SBSTB#
ADSTB1
ADSTB1#
VREFGC
VREFCG
ADSTB0
ADSTB0#
STP_AGP#
GC_STNDBY#
GC_SUSPEND#
M_ID2#
M_SEN#
AGP_BUSY#
CLKRUN#
NC0
NC1
PCIAD0 … PCIAD31
PCICBE0J
PCICBE1J
PCICBE2J
PCICBE3J
PCICLK
PCIRSTJ
C834 56pF
PCICLK_RC
R545 75
PCIGNTJ
PCIREQJ
PCIFRAMEJ
PCIIRDYJ
PCITRDYJ
PCIDEVSELJ
PCISTOPJ
PCIPAR
PCIINTAJ
AGPRBFJ
AGPWBFJ
AGPPIPEJ
AGPST0
AGPST1
AGPST2
AGPADSTB1
AGPADSTB1J
AGPADSTB0
AGPADSTB0J
AGPBUSY_L
AGPSTOP_L
AGPVREFCG
R_AGPSTOP_L
R507 300
AGP_BUSY_L
U29A
A01
PCIAD0 … PCIAD31
PCICBE#0
PCICBE#1
PCICBE#2
PCICBE#3
PCICLK
PCIRST#
PCIGNT#
PCIREQ#
PCIFRAME#
PCIIRDY#
PCITRDY#
PCIDEVSEL#
PCISTOP#
PCIPAR
PCIINTA#
AGPRBF#
AGPWBF#
AGPPIPE#
AGPST0
AGPST1
AGPST2
AGPADSTB1
AGPADSTB1#
AGPADSTB0
AGPADSTB0#
AGPBUSY#
AGPSTOP#
AGPVREF
VDDQ
VDD
VD50CLAMP
VDD33
GND
TESTMODE0
TESTMODE1
TEST0
TEST1
C127 0.1uF
C128 0.1uF
C130 0.1uF
C131 0.1uF
C423 0.1uF
R171 10K
R65 10K
R78 301K
R77 221K
C145 0.1uF NO STUFF
R157 1.5K
R158 75
R159 1.5K
R160 75
C320 470pF
C321 470pF
AGPVREF1
AGPVREF2
AGPVREFGC
U16 FDC6301N
R553 10K NO STUFF
R502 10K
R_3.3VSUS
Note: R11 18.2K = 1.5V
R11 36.5K = 1.9V
U4
MAX1644EAE
IN_1
IN_2
LX_1
LX_2
LX_3
FB
VCC
PGND_1
PGND_2
FBSEL
SHDN
COMP
TOFF
GND
REF
SS
L29 6.8uH
NVVDD_L
R11 18.2K
C57 330uF R040
ADJ
R9 49.9K
R112 10
REG5V
C17 10uF
C324 0.1uF
C325 470pF
CMP
TOFF
R168 180K
C326 0.01UF
C327 1uF
REF
SS
PCB1000
(PER FAB DWG)
M7
THERMAL INTERFACE PAD FOR P41
M5
STANDOFF METAL FOR P41
M6
STANDOFF PLASTIC FOR P41

NVXX HOST INTERFACE

Micro-Star International Co., LTD.			
MS8832,1/2/4MX32-DDR,TV			
Size C	Document Number HOST INTERFACE_NEW		Rev 100
Date: Tuesday, April 30, 2002	Sheet 2 of 9		

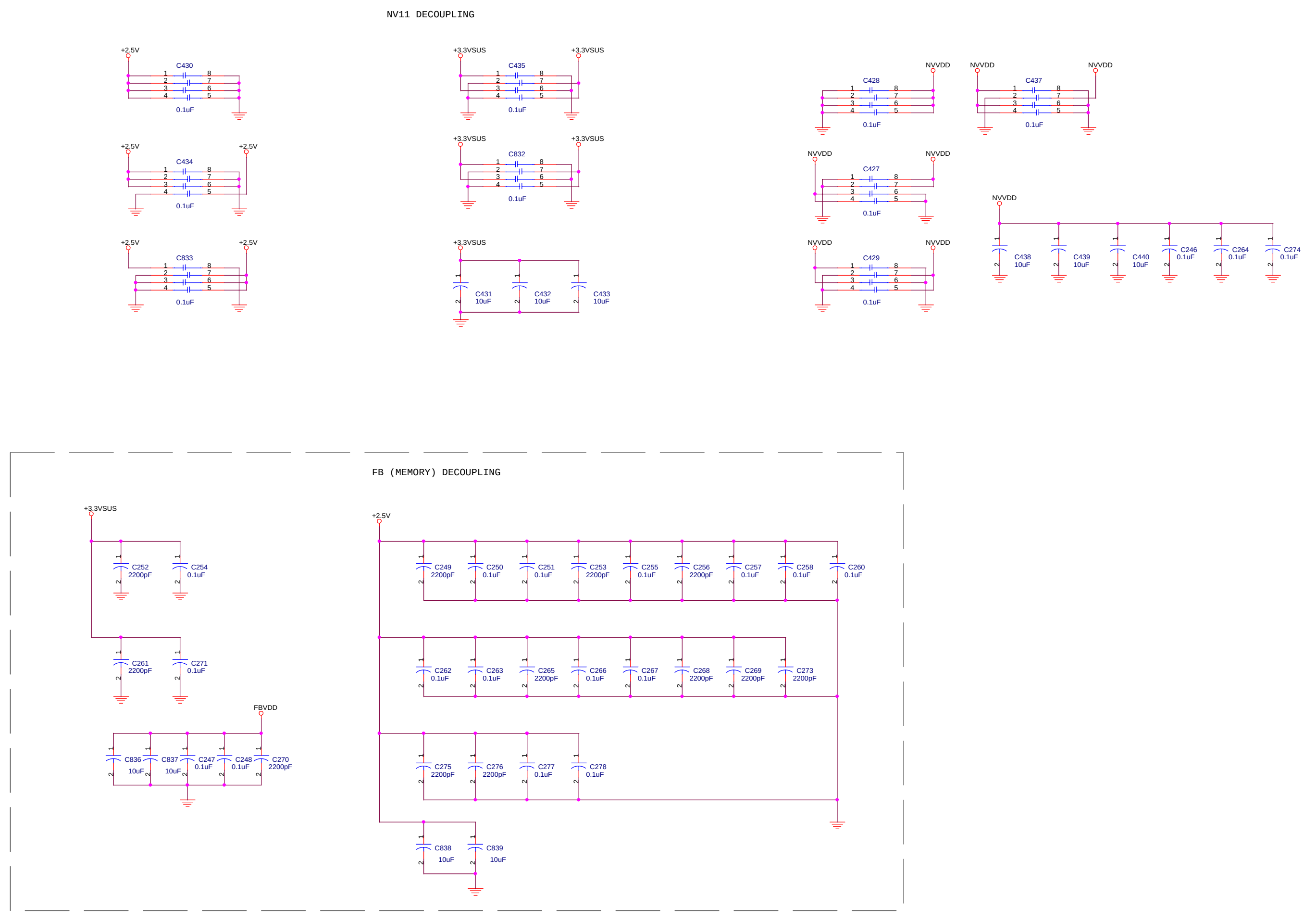
NV11 DECOUPLING
+2.5V
C430
0.1uF
+3.3VSUS
C435
0.1uF
NVVDD
C428
0.1uF
C437
0.1uF
C434
C832
C427
C833
C431
10uF
C432
10uF
C433
10uF
C429
C438
10uF
C439
10uF
C440
10uF
C246
0.1uF
C264
0.1uF
C274
0.1uF
FB (MEMORY) DECOUPLING
C252
2200pF
C254
0.1uF
C261
2200pF
C271
0.1uF
FBVDD
C836
10uF
C837
10uF
C247
0.1uF
C248
0.1uF
C270
2200pF
C249
2200pF
C250
0.1uF
C251
0.1uF
C253
2200pF
C255
0.1uF
C256
2200pF
C257
0.1uF
C258
0.1uF
C260
0.1uF
C262
0.1uF
C263
0.1uF
C265
2200pF
C266
0.1uF
C267
0.1uF
C268
2200pF
C269
2200pF
C273
2200pF
C275
2200pF
C276
2200pF
C277
0.1uF
C278
0.1uF
C838
10uF
C839
10uF

FB/NVXX DECOUPLING

Micro-Star International Co., LTD.

MS8832,1/2/4MX32-DDR,TV

Size	Document Number	Rev
C	FB/NVXX Decouplng	100

Date: Tuesday, April 30, 2002 Sheet 3 of 9

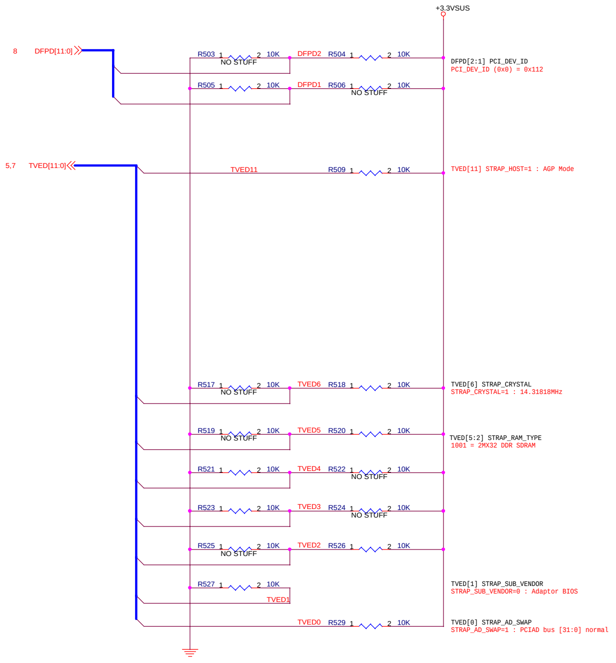
+3.3VSUS
8
DFPD[11:0]
R503 1 2 10K
NO STUFF
DFPD2
R504 1 2 10K
DFPD[2:1] PCI_DEV_ID
PCI_DEV_ID (0x0) = 0x112
R505 1 2 10K
DFPD1
R506 1 2 10K
NO STUFF
5,7
TVED[11:0]
TVED11
R509 1 2 10K
TVED[11] STRAP_HOST=1 : AGP Mode
R517 1 2 10K
NO STUFF
TVED6
R518 1 2 10K
TVED[6] STRAP_CRYSTAL
STRAP_CRYSTAL=1 : 14.31818MHz
R519 1 2 10K
NO STUFF
TVED5
R520 1 2 10K
TVED[5:2] STRAP_RAM_TYPE
1001 = 2MX32 DDR SDRAM
R521 1 2 10K
TVED4
R522 1 2 10K
NO STUFF
R523 1 2 10K
TVED3
R524 1 2 10K
NO STUFF
R525 1 2 10K
NO STUFF
TVED2
R526 1 2 10K
R527 1 2 10K
TVED1
TVED[1] STRAP_SUB_VENDOR
STRAP_SUB_VENDOR=0 : Adaptor BIOS
TVED0
R529 1 2 10K
TVED[0] STRAP_AD_SWAP
STRAP_AD_SWAP=1 : PCIAD bus [31:0] normal

NVXX HOST STRAPS

Micro-Star International Co., LTD.

MS8832,1/2/4MX32-DDR,TV

Size	Document Number	Rev
C	NVXX BOOT STRAPS	100

Date: Tuesday, April 30, 2002 Sheet 4 of 9

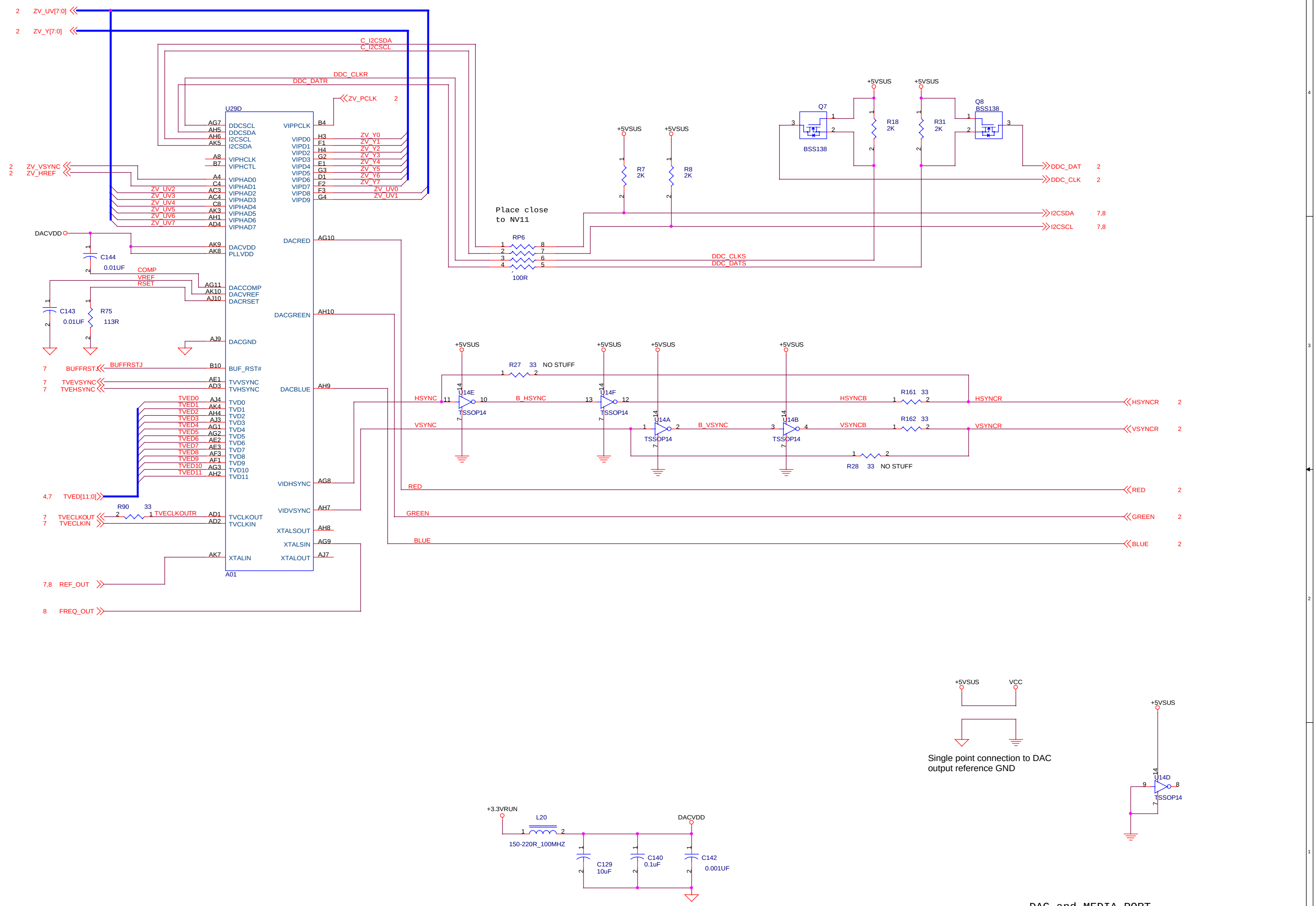
2 ZV_UV[7:0]
2 ZV_Y[7:0]
C_I2CSDA
C_I2CSCL
DDC_CLKR
DDC_DATR
ZV_PCLK 2
U29D
AG7 DDCSCL
AH5 DDCSDA
AH6 I2CSCL
AK5 I2CSDA
A8 VIPHCLK
B7 VIPHCTL
2 ZV_VSYNC
2 ZV_HREF
A4 VIPHAD0
C4 VIPHAD1
ZV_UV2 AC3 VIPHAD2
ZV_UV3 AC4 VIPHAD3
ZV_UV4 C8 VIPHAD4
ZV_UV5 AK3 VIPHAD5
ZV_UV6 AH1 VIPHAD6
ZV_UV7 AD4 VIPHAD7
VIPPCLK B4
VIPD0 H3 ZV_Y0
VIPD1 F1 ZV_Y1
VIPD2 H4 ZV_Y2
VIPD3 G2 ZV_Y3
VIPD4 E1 ZV_Y4
VIPD5 G3 ZV_Y5
VIPD6 D1 ZV_Y6
VIPD7 F2 ZV_Y7
VIPD8 F3 ZV_UV0
VIPD9 G4 ZV_UV1
DACVDD
C144 0.01UF
AK9 DACVDD
AK8 PLLVDD
COMP
VREF
RSET
AG11 DACCOMP
AK10 DACVREF
AJ10 DACRSET
C143 0.01UF
R75 113R
AJ9 DACGND
DACRED AG10
DACGREEN AH10
DACBLUE AH9
7 BUFFRSTJ
BUFFRSTJ
B10 BUF_RST#
7 TVEVSYNC AE1 TVVSYNC
7 TVEHSYNC AD3 TVHSYNC
TVED0 AJ4 TVD0
TVED1 AK4 TVD1
TVED2 AH4 TVD2
TVED3 AJ3 TVD3
TVED4 AG1 TVD4
TVED5 AG2 TVD5
TVED6 AE2 TVD6
TVED7 AE3 TVD7
TVED8 AF3 TVD8
TVED9 AF1 TVD9
TVED10 AG3 TVD10
TVED11 AH2 TVD11
4,7 TVED[11:0]
R90 33
TVECLKOUTR
7 TVECLKOUT AD1 TVCLKOUT
7 TVECLKIN AD2 TVCLKIN
VIDHSYNC AG8
VIDVSYNC AH7
XTALSOUT AH8
XTALSIN AG9
AK7 XTALIN
XTALOUT AJ7
A01
7,8 REF_OUT
8 FREQ_OUT
+5VSUS
Q7 BSS138
Q8 BSS138
R18 2K
R31 2K
DDC_DAT 2
DDC_CLK 2
R7 2K
R8 2K
Place close
to NV11
I2CSDA 7,8
I2CSCL 7,8
RP6
100R
DDC_CLKS
DDC_DATS
R27 33 NO STUFF
HSYNC
U14E TSSOP14
B_HSYNC
U14F TSSOP14
HSYNCB
R161 33
HSYNCR
HSYNCR 2
VSYNC
U14A TSSOP14
B_VSYNC
U14B TSSOP14
VSYNCB
R162 33
VSYNCR
VSYNCR 2
R28 33 NO STUFF
RED
RED 2
GREEN
GREEN 2
BLUE
BLUE 2
VCC
Single point connection to DAC
output reference GND
U14D TSSOP14
+3.3VRUN
L20
150-220R_100MHZ
DACVDD
C129 10uF
C140 0.1uF
C142 0.001UF

DAC and MEDIA PORT

Micro-Star International Co., LTD.

MS8832,1/2/4MX32-DDR,TV

Size	Document Number	Rev
C	DAC and MEDIA PORT	100

Date: Tuesday, April 30, 2002 Sheet 5 of 9

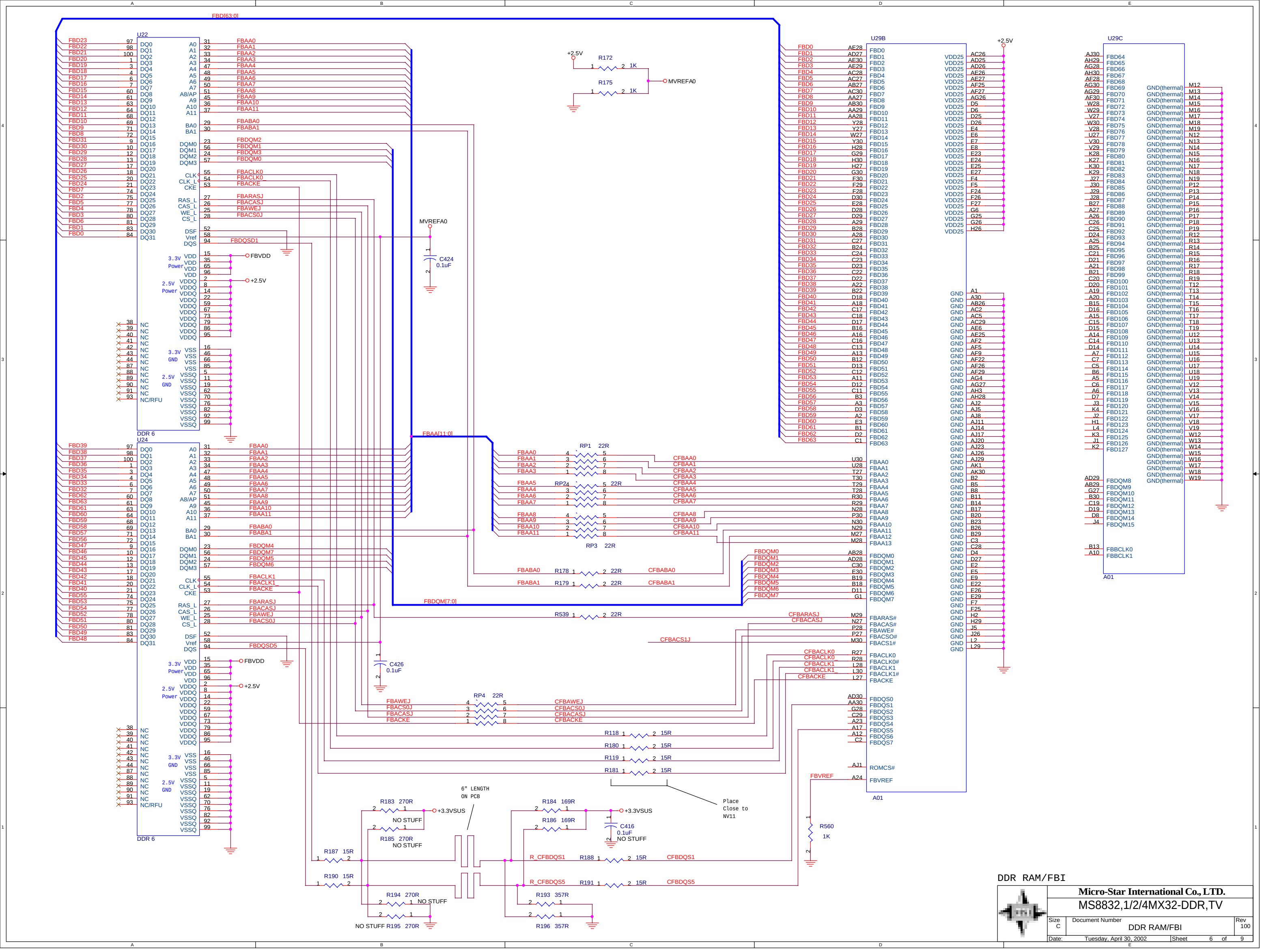
FBD[63:0]
U22
DDR 6
U24
DDR 6
U29B
A01
U29C
A01
FBAA[11:0]
FBDQM[7:0]
MVREFA0
+2.5V
R172 1K
R175 1K
C424 0.1uF
C426 0.1uF
FBVDD
3.3V Power
2.5V Power
3.3V GND
2.5V GND
NC/RFU
RP1 22R
RP24 22R
RP3 22R
RP4 22R
R178 22R
R179 22R
R539 22R
R118 15R
R180 15R
R119 15R
R181 15R
Place Close to NV11
R560 1K
FBVREF
ROMCS#
R183 270R
NO STUFF
R185 270R
NO STUFF
+3.3VSUS
6" LENGTH ON PCB
R184 169R
R186 169R
C416 0.1uF
NO STUFF
R187 15R
R190 15R
R188 15R
R191 15R
R_CFBDQS1
CFBDQS1
R_CFBDQS5
CFBDQS5
R194 270R
NO STUFF
R195 270R
NO STUFF
R193 357R
R196 357R
VDD25
GND
GND(thermal)
CFBAA0
CFBAA1
CFBAA2
CFBAA3
CFBAA4
CFBAA5
CFBAA6
CFBAA7
CFBAA8
CFBAA9
CFBAA10
CFBAA11
CFBABA0
CFBABA1
CFBARASJ
CFBACASJ
CFBAWEJ
CFBACS0J
CFBACS1J
CFBACKE
CFBACLK0
CFBACLK1
FBDQS0
FBDQS1
FBDQSD5
FBBCLK0
FBBCLK1

DDR RAM/FBI

Micro-Star International Co., LTD.

MS8832,1/2/4MX32-DDR,TV

Size	Document Number	Rev
C	DDR RAM/FBI	100

Date: Tuesday, April 30, 2002 Sheet 6 of 9

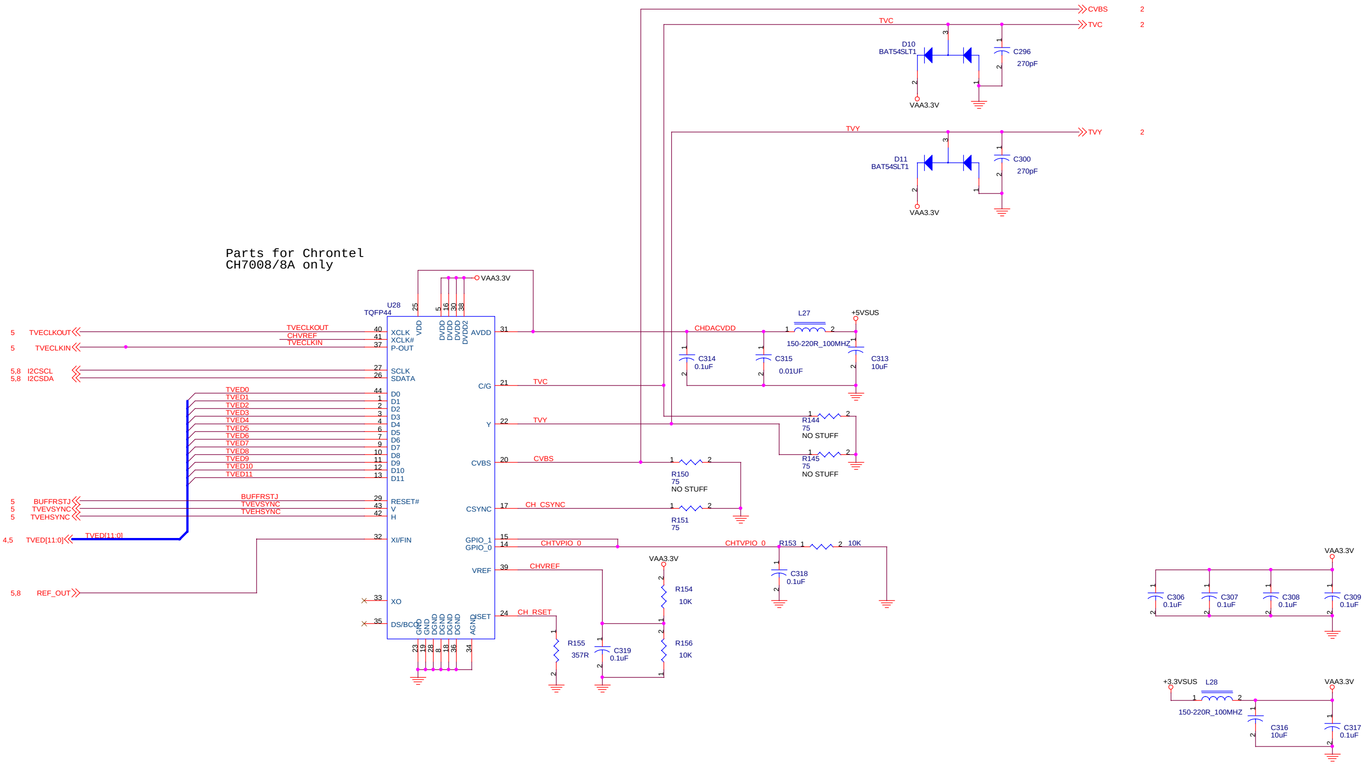
CVBS 2
TVC 2
TVC
D10
BAT54SLT1
C296
270pF
VAA3.3V
TVY
TVY 2
D11
BAT54SLT1
C300
270pF
VAA3.3V
U28
TQFP44
VAA3.3V
25 5 16 30 38
VDD DVDD DVDD DVDD DVDD2
5 TVECLKOUT
5 TVECLKIN
5,8 I2CSCL
5,8 I2CSDA
TVECLKOUT 40 XCLK
CHVREF 41 XCLK#
TVECLKIN 37 P-OUT
27 SCLK
26 SDATA
TVED0 44 D0
TVED1 1 D1
TVED2 2 D2
TVED3 3 D3
TVED4 4 D4
TVED5 6 D5
TVED6 7 D6
TVED7 9 D7
TVED8 10 D8
TVED9 11 D9
TVED10 12 D10
TVED11 13 D11
5 BUFFRSTJ
5 TVEVSYNC
5 TVEHSYNC
BUFFRSTJ 29 RESET#
TVEVSYNC 43 V
TVEHSYNC 42 H
4,5 TVED[11:0]
TVED[11:0]
32 XI/FIN
5,8 REF_OUT
33 XO
35 DS/BCO
GND GND DGND DGND DGND DGND AGND
23 19 28 8 18 36 34
AVDD 31
C/G 21 TVC
Y 22 TVY
CVBS 20 CVBS
CSYNC 17 CH_CSYNC
GPIO_1 15
GPIO_0 14 CHTVPIO_0
VREF 39 CHVREF
ISET 24 CH_RSET
CHDACVDD
L27
150-220R_100MHZ
+5VSUS
C314
0.1uF
C315
0.01UF
C313
10uF
R144
75
NO STUFF
R145
75
NO STUFF
R150
75
NO STUFF
R151
75
CHTVPIO_0
R153
10K
C318
0.1uF
VAA3.3V
R154
10K
R155
357R
C319
0.1uF
R156
10K
VAA3.3V
C306
0.1uF
C307
0.1uF
C308
0.1uF
C309
0.1uF
+3.3VSUS
L28
150-220R_100MHZ
VAA3.3V
C316
10uF
C317
0.1uF

Parts for Chrontel
CH7008/8A only

Chrontel TV ENCODER

Micro-Star International Co., LTD.		
MS8832,1/2/4MX32-DDR,TV		
Size C	Document Number Chrontel TV ENCODER	Rev 100
Date: Tuesday, April 30, 2002	Sheet 7 of 9	

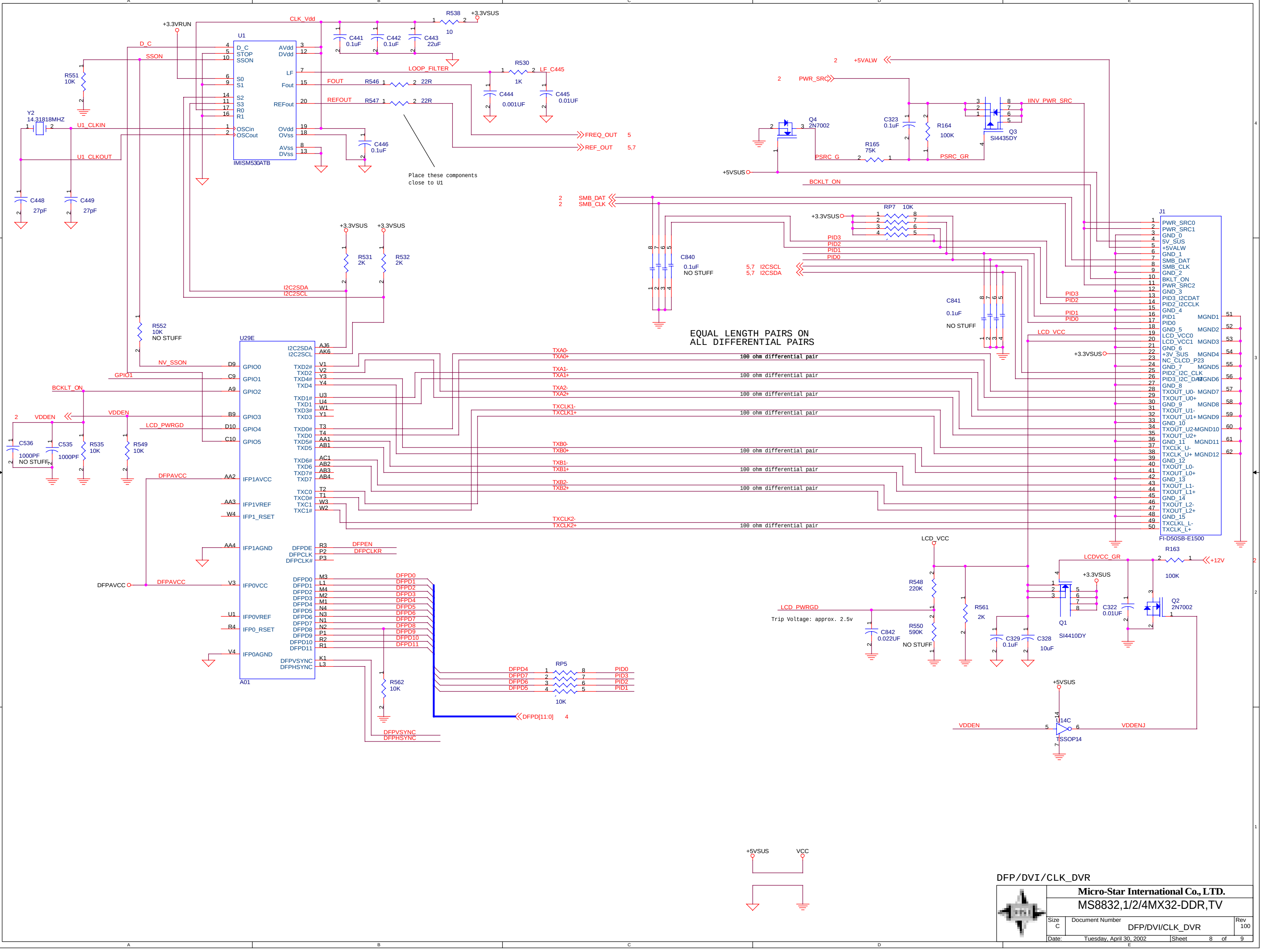
U1
IMISM530ATB
D_C
SSON
STOP
S0
S1
S2
S3
R0
R1
OSCin
OSCout
AVdd
DVdd
LF
Fout
REFout
OVdd
OVss
AVss
DVss
CLK_Vdd
+3.3VRUN
+3.3VSUS
R538
10
C441
0.1uF
C442
0.1uF
C443
22uF
LOOP_FILTER
R530
1K
LF_C445
C444
0.001UF
C445
0.01UF
FOUT
REFOUT
R546
R547
22R
FREQ_OUT
REF_OUT
C446
0.1uF
Place these components close to U1
R551
10K
Y2
14.31818MHZ
U1_CLKIN
U1_CLKOUT
C448
27pF
C449
27pF
R531
2K
R532
2K
I2C2SDA
I2C2SCL
R552
10K
NO STUFF
U29E
A01
NV_SSON
GPIO1
BCKLT_ON
VDDEN
LCD_PWRGD
DFPAVCC
C536
1000PF
NO STUFF
C535
1000PF
R535
10K
R549
10K
GPIO0
GPIO1
GPIO2
GPIO3
GPIO4
GPIO5
IFP1AVCC
IFP1VREF
IFP1_RSET
IFP1AGND
IFP0VCC
IFP0VREF
IFP0_RSET
IFP0AGND
TXD2#
TXD2
TXD4#
TXD4
TXD1#
TXD1
TXD3#
TXD3
TXD0#
TXD0
TXD5#
TXD5
TXD6#
TXD6
TXD7#
TXD7
TXC0
TXC0#
TXC1
TXC1#
DFPDE
DFPCLK
DFPCLK#
DFPD0
DFPD1
DFPD2
DFPD3
DFPD4
DFPD5
DFPD6
DFPD7
DFPD8
DFPD9
DFPD10
DFPD11
DFPVSYNC
DFPHSYNC
DFPEN
DFPCLKR
R562
10K
RP5
10K
PID0
PID1
PID2
PID3
DFPD[11:0]
TXA0-
TXA0+
TXA1-
TXA1+
TXA2-
TXA2+
TXCLK1-
TXCLK1+
TXB0-
TXB0+
TXB1-
TXB1+
TXB2-
TXB2+
TXCLK2-
TXCLK2+
100 ohm differential pair
EQUAL LENGTH PAIRS ON
ALL DIFFERENTIAL PAIRS
+5VALW
PWR_SRC
Q4
2N7002
C323
0.1uF
R164
100K
R165
75K
PSRC_G
PSRC_GR
Q3
SI4435DY
IINV_PWR_SRC
+5VSUS
BCKLT_ON
SMB_DAT
SMB_CLK
RP7
10K
C840
0.1uF
NO STUFF
C841
0.1uF
NO STUFF
I2CSCL
I2CSDA
LCD_VCC
J1
FI-D50SB-E1500
PWR_SRC0
PWR_SRC1
GND_0
5V_SUS
+5VALW
GND_1
SMB_DAT
SMB_CLK
GND_2
BKLT_ON
PWR_SRC2
GND_3
PID3_I2CDAT
PID2_I2CCLK
GND_4
PID1
PID0
GND_5
LCD_VCC0
LCD_VCC1
GND_6
+3V_SUS
NC_CLCD_P23
GND_7
PID2_I2C_CLK
PID3_I2C_DAT
GND_8
TXOUT_U0-
TXOUT_U0+
GND_9
TXOUT_U1-
TXOUT_U1+
GND_10
TXOUT_U2-
TXOUT_U2+
GND_11
TXCLK_U-
TXCLK_U+
GND_12
TXOUT_L0-
TXOUT_L0+
GND_13
TXOUT_L1-
TXOUT_L1+
GND_14
TXOUT_L2-
TXOUT_L2+
GND_15
TXCLKL_L-
TXCLK_L+
MGND1
MGND2
MGND3
MGND4
MGND5
MGND6
MGND7
MGND8
MGND9
MGND10
MGND11
MGND12
LCDVCC_GR
R163
100K
+12V
R548
220K
R550
590K
NO STUFF
R561
2K
LCD_PWRGD
Trip Voltage: approx. 2.5v
C842
0.022UF
Q1
SI4410DY
C329
0.1uF
C328
10uF
C322
0.01UF
Q2
2N7002
U14C
TSSOP14
VDDEN
VDDENJ
VCC

DFP/DVI/CLK_DVR

Micro-Star International Co., LTD.			
MS8832,1/2/4MX32-DDR,TV			
Size C	Document Number DFP/DVI/CLK_DVR		Rev 100
Date: Tuesday, April 30, 2002		Sheet 8 of 9	

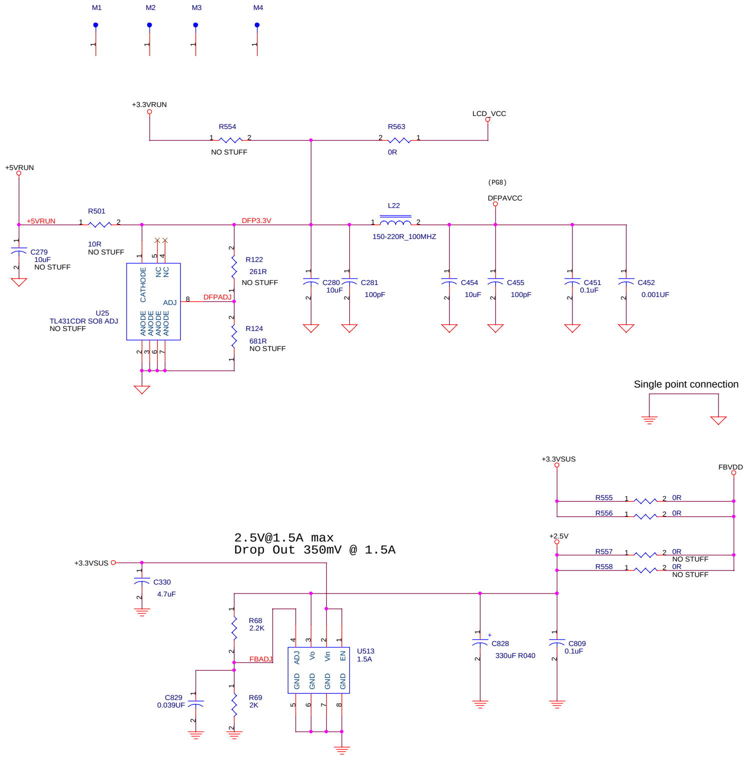
M1
M2
M3
M4
+3.3VRUN
R554
NO STUFF
R563
0R
LCD_VCC
+5VRUN
R501
10R
NO STUFF
+5VRUN
DFP3.3V
C279
10uF
NO STUFF
L22
150-220R_100MHZ
(PG8)
DFPAVCC
CATHODE
NC
NC
ADJ
ANODE
ANODE
ANODE
ANODE
U25
TL431CDR SO8 ADJ
NO STUFF
DFPADJ
R122
261R
NO STUFF
R124
681R
NO STUFF
C280
10uF
C281
100pF
C454
10uF
C455
100pF
C451
0.1uF
C452
0.001UF
Single point connection
+3.3VSUS
FBVDD
R555
0R
R556
0R
+2.5V
R557
0R
NO STUFF
R558
0R
NO STUFF
2.5V@1.5A max
Drop Out 350mV @ 1.5A
+3.3VSUS
C330
4.7uF
R68
2.2K
FBADJ
ADJ
Vo
Vin
EN
GND
GND
GND
GND
U513
1.5A
R69
2K
C829
0.039UF
C828
330uF R040
C809
0.1uF

DC-DC CONTVR

Micro-Star International Co., LTD.

MS8832,1/2/4MX32-DDR,TV

Size	Document Number	Rev
C	DC-DC CONTVR	100

Date: Tuesday, April 30, 2002 Sheet 9 of 9