NAVI14 GDDR6 4PCS,8L 3xDPs +1xHDMI

105-D332xx-00B RevB Desktop board(110W TGP)

TABLE OF CONTENTS

SHEET NO.	SHEET NAME	SHEET NO.	SHEET NAME
1	TOC	26	DEBUG CIRCUITS
2	BLOCK DIAGRAM	27	REVISION HISTORY
3	NAVI14 - PCIe Interface		
4	NAVI14 - GPIO, EXTRA		
5	NAVI14 - XTAL		
6	NAVI14 - POWER and GND		
7	NAVI14 - Decaps		
8	NAVI14 - MEM CH AB		
9	NAVI14 - MEM CH CD		
10	GDDR6 x16 - MEM CH AB		
11	GDDR6 x16 - MEM CH CD		
12	NAVI14 - TMDPAB - USB,HDMI		
13	NAVI14 - TMDPCD - DP,DP		
14	NAVI14 - TMDPE - DP		
15	REG VDDGFX/SOC CONTL		
16	REG VDDGFX		
17	REG VDDSOC		
18	REG PCC		
19	REG VDDCI/MVDD CNTL		
20	REG VDDCI/MVDD		
21	REG - 0V75		
22	LDO 1V8/VPP/5V/5V_VESA		
23	MECHANICAL AND THERMAL		
24	POWER MANAGEMENT		
25	SVI2		

MICRO-STAR INT'L CO.,LTD

MS-V382

Size	Document Description	Rev
Custom	TOC	1.1

Date: Friday, November 15, 2019 | Sheet 1 of 28

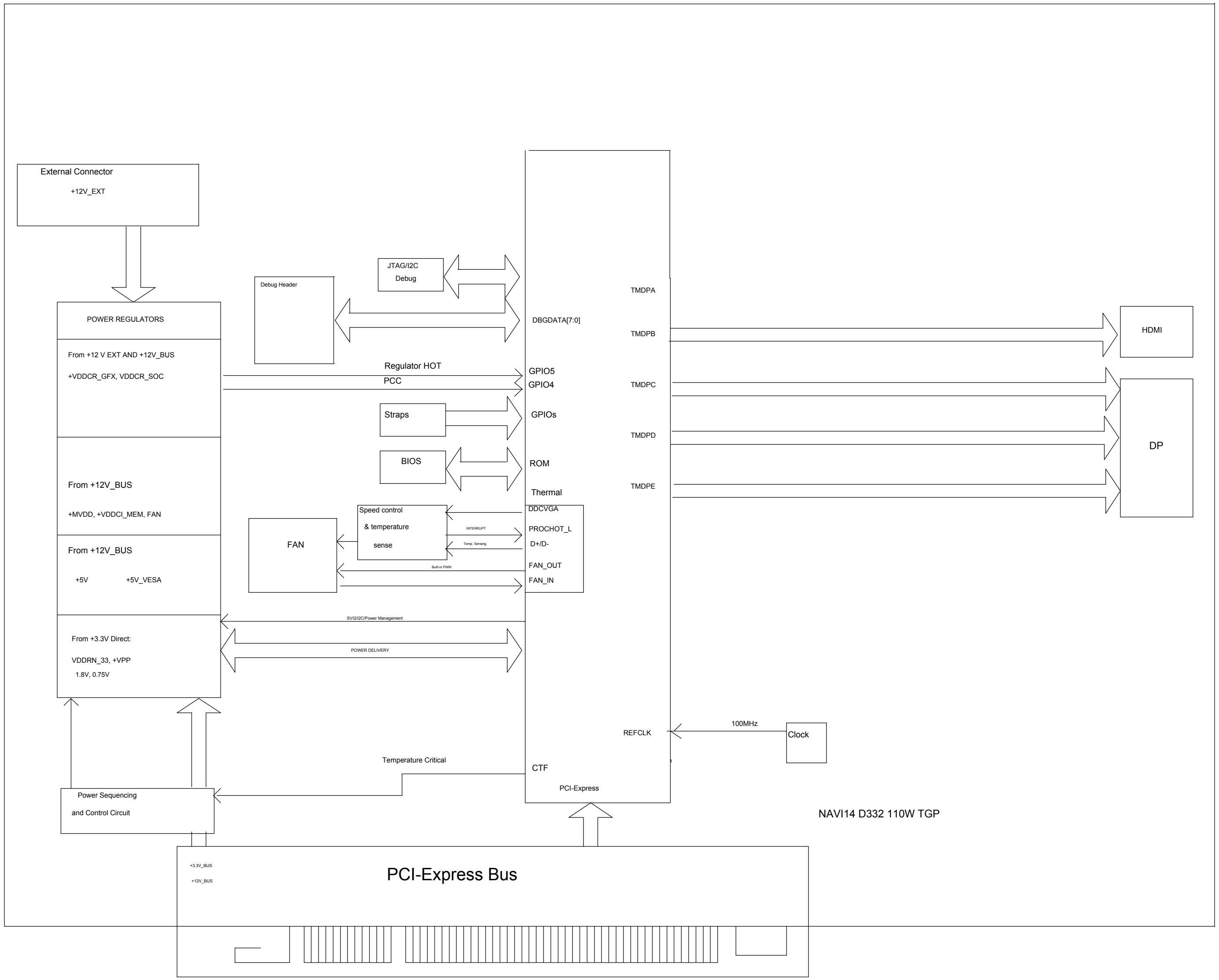
External Connector
+12V_EXT
POWER REGULATORS
From +12 V EXT AND +12V_BUS
+VDDCR_GFX, VDDCR_SOC
From +12V_BUS
+MVDD, +VDDCI_MEM, FAN
From +12V_BUS
+5V
+5V_VESA
From +3.3V Direct:
VDDRN_33, +VPP
1.8V, 0.75V
Debug Header
JTAG/I2C
Debug
Regulator HOT
PCC
Straps
BIOS
Speed control
& temperature
sense
FAN
INTERRUPT
Temp. Sensing
Built-in PWM
SVI2/I2C/Power Management
POWER DELIVERY
DBGDATA[7:0]
GPIO5
GPIO4
GPIOs
ROM
Thermal
DDCVGA
PROCHOT_L
D+/D-
FAN_OUT
FAN_IN
TMDPA
TMDPB
TMDPC
TMDPD
TMDPE
HDMI
DP
REFCLK
100MHz
Clock
Temperature Critical
CTF
PCI-Express
Power Sequencing
and Control Circuit
NAVI14 D332 110W TGP
+3.3V_BUS
+12V_BUS
PCI-Express Bus

MICRO-STAR INT'L CO.,LTD

MS-V382

Size	Document Description	Rev
Custom	BLOCK DIAGRAM	11

Date: Friday, November 15, 2019 Sheet 2 of 28

(3) NAVI14 PCIe Edge Connector

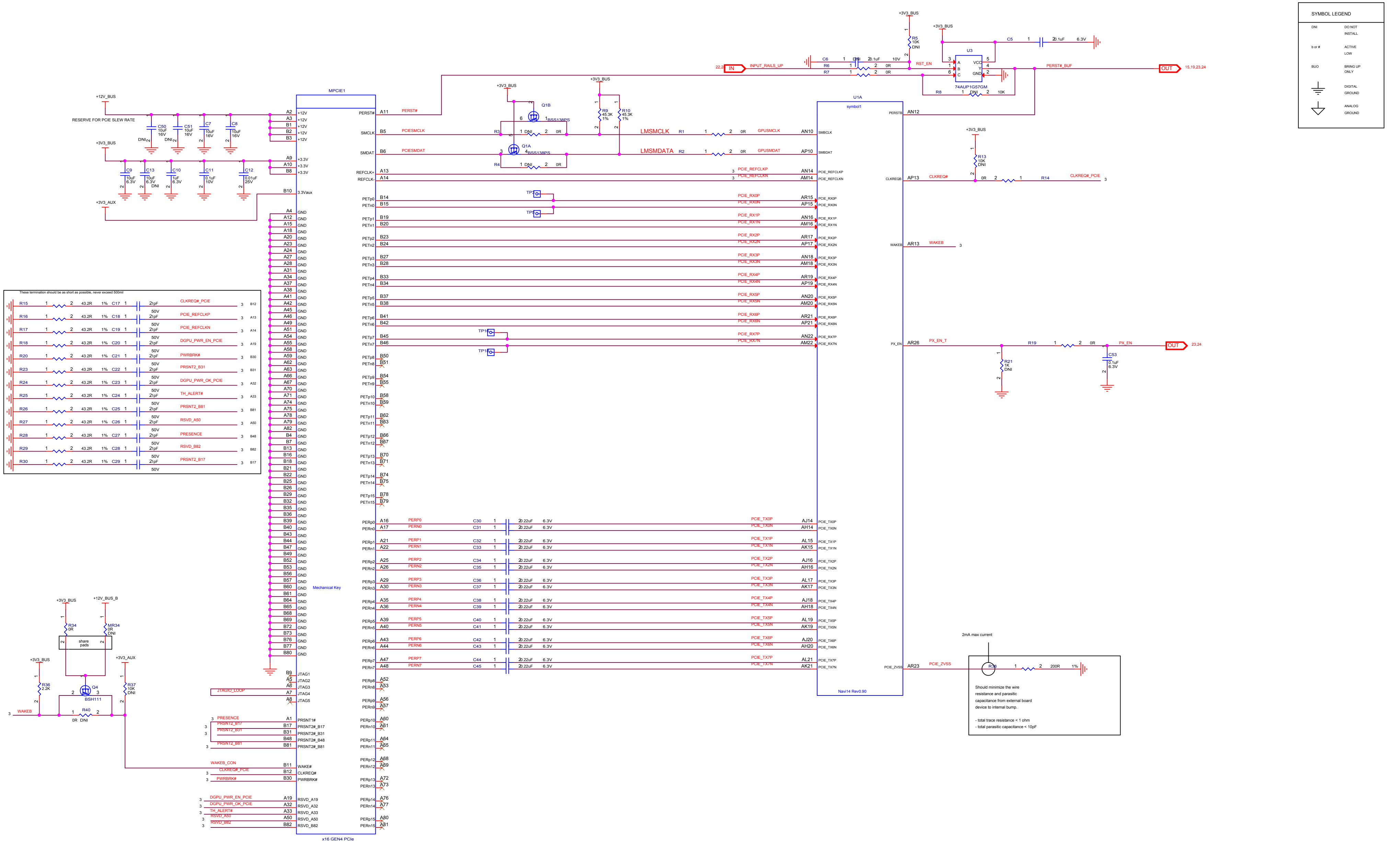
MPCIE1
x16 GEN4 PCIe
Mechanical Key
U1A
symbol1
Navi14 Rev0.90
U3
74AUP1G57GM
Q1A
Q1B
BSS138PS
Q4
BSH111
+12V_BUS
+3V3_BUS
+3V3_AUX
+12V_BUS_B
RESERVE FOR PCIE SLEW RATE
PERST#
LMSMCLK
LMSMDATA
GPUSMCLK
GPUSMDAT
PCIESMCLK
PCIESMDAT
PCIE_REFCLKP
PCIE_REFCLKN
INPUT_RAILS_UP
RST_EN
PERST#_BUF
CLKREQ#
CLKREQ#_PCIE
WAKEB
WAKEB_CON
PX_EN_T
PCIE_ZVSS
PRESENCE
PRSNT2_B17
PRSNT2_B31
PRSNT2_B81
PWRBRK#
DGPU_PWR_EN_PCIE
DGPU_PWR_OK_PCIE
TH_ALERT#
RSVD_A50
RSVD_B82
JTAGIO_LOOP
share pads
2mA max current

These termination should be as short as possible, never exceed 500mil

Should minimize the wire resistance and parasitic capacitance from external board device to internal bump.

- total trace resistance < 1 ohm
- total parasitic capacitance < 10pF

SYMBOL LEGEND

DNI	DO NOT INSTALL
b or #	ACTIVE LOW
BUO	BRING UP ONLY
⏚	DIGITAL GROUND
▽	ANALOG GROUND

MICRO-STAR INT'L CO.,LTD

MS-V382

Size	Document Description	Rev
Custom	NAVI14 - PCIe Interface	11

Date: Friday, November 22, 2019 | Sheet 3 of 28

(4) NAVI14 GPIOs & ROM

7-BIT I2C ADDRESS	8-BIT I2C ADDRESS	FUNCTION	I2C BUS	DEVICE
0x30	0x60	VDDCR_GFX/SOC	SCL/SDA	U501/IR35217
0x22	0x44	MVDD/VDDCI	SCL/SDA	U701/NCP81022
0x53	0xA6	PCCψreserved	SCL/SDA	U4601/GS8601
0x48	0x90	G6 Temperture	DDCVGACLK/DATA	U4000/TMP102A
0x4C	0x98	EXT SENSOR	DDCVGACLK/DATA	U4001/LM96163

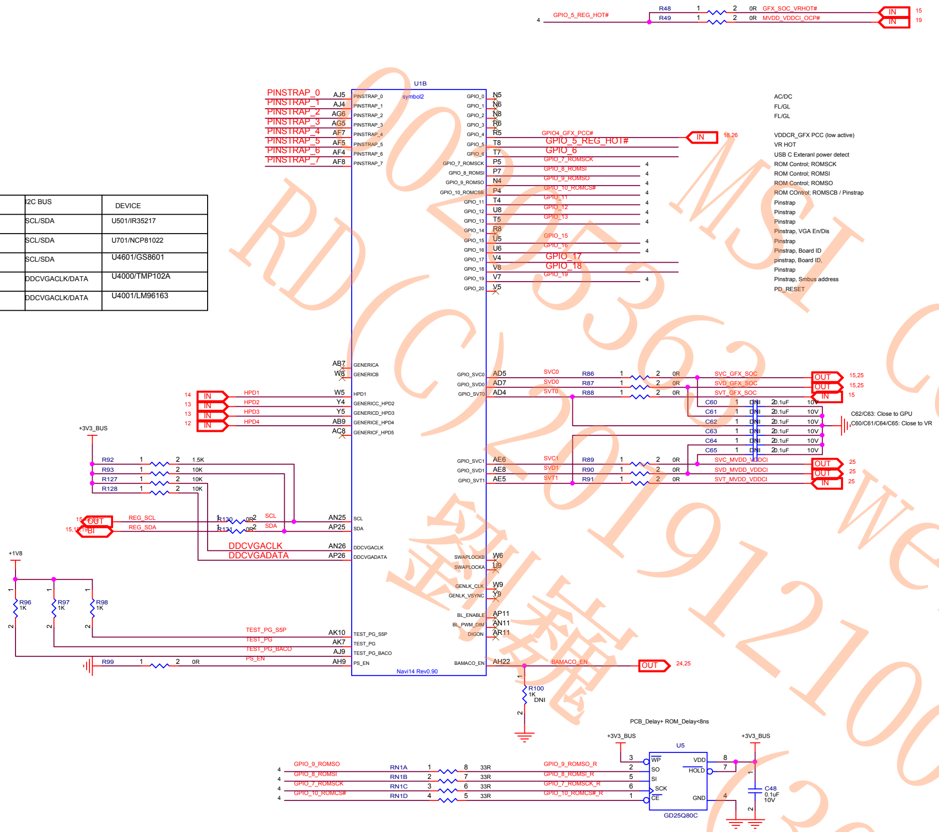
U1B
symbol2
Navi14 Rev0.90
PINSTRAP_0
PINSTRAP_1
PINSTRAP_2
PINSTRAP_3
PINSTRAP_4
PINSTRAP_5
PINSTRAP_6
PINSTRAP_7
GPIO_5_REG_HOT#
GPIO_6
GPIO_17
GPIO_18
GFX_SOC_VRHOT#
MVDD_VDDCI_OCP#
R48
R49
AC/DC
FL/GL
VDDCR_GFX PCC (low active)
VR HOT
USB C Exterani power detect
ROM Control; ROMSCK
ROM Control; ROMSI
ROM Control; ROMSO
ROM COntrol; ROMSCB / Pinstrap
Pinstrap
Pinstrap, VGA En/Dis
Pinstrap, Board ID
pinstrap, Board ID
Pinstrap, Smbus address
PD_RESET
HPD1
HPD2
HPD3
HPD4
SVC_GFX_SOC
SVD_GFX_SOC
SVT_GFX_SOC
SVC_MVDD_VDDCI
SVD_MVDD_VDDCI
SVT_MVDD_VDDCI
C62/C63: Close to GPU
C60/C61/C64/C65: Close to VR
+3V3_BUS
+1V8
R92
R93
R127
R128
REG_SCL
REG_SDA
DDCVGACLK
DDCVGADATA
R96
R97
R98
TEST_PG_SSP
TEST_PG
TEST_PG_BACO
PS_EN
R99
BAMACO_EN
R100
1K
DNI
PCB_Delay+ ROM_Delay<8ns
U5
GD25Q80C
GPIO_9_ROMSO
GPIO_8_ROMSI
GPIO_7_ROMSCK
GPIO_10_ROMCS#
RN1A
RN1B
RN1C
RN1D
33R
C48
0.1uF
10V
IN
OUT

Note: Internal PU/PD at GPIO pad is ~40k
strength in 14nm design spec

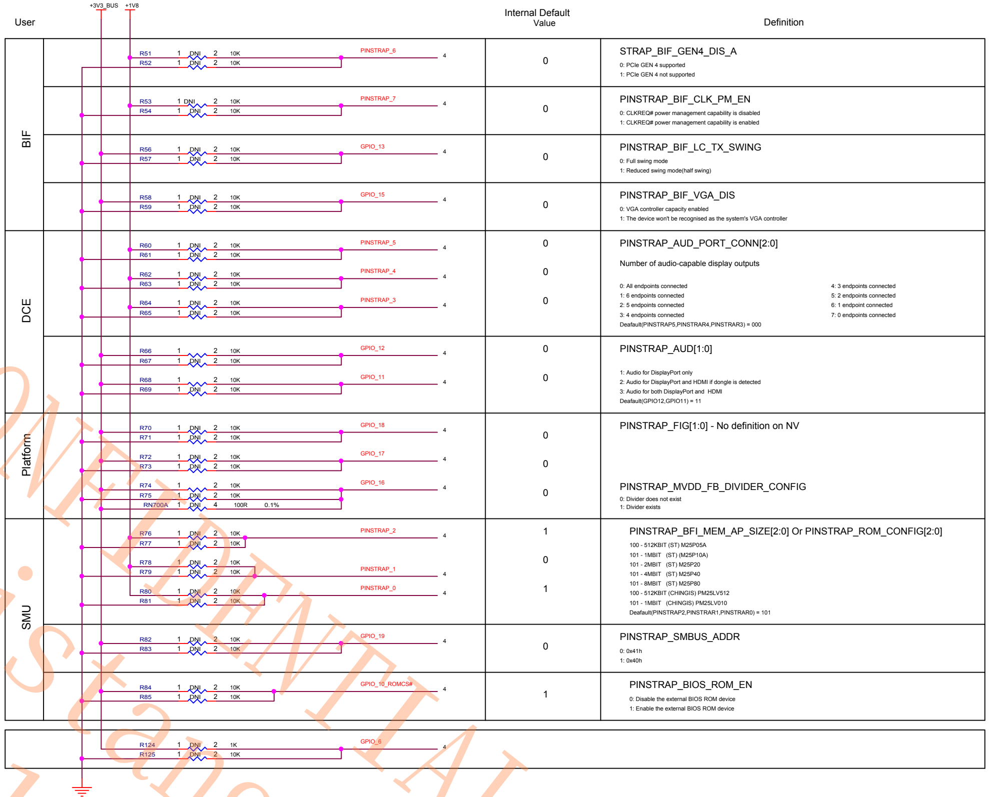
+3V3_BUS
+1V8
R51
R52
R53
R54
R56
R57
R58
R59
R60
R61
R62
R63
R64
R65
R66
R67
R68
R69
R70
R71
R72
R73
R74
R75
RN700A
R76
R77
R78
R79
R80
R81
R82
R83
R84
R85
R124
R125
DNI
10K
1K
100R
0.1%
PINSTRAP_6
PINSTRAP_7
GPIO_13
GPIO_15
PINSTRAP_5
PINSTRAP_4
PINSTRAP_3
GPIO_12
GPIO_11
GPIO_18
GPIO_17
GPIO_16
PINSTRAP_2
PINSTRAP_1
PINSTRAP_0
GPIO_19
GPIO_10_ROMCS#
GPIO_6

User	Internal Default Value	Definition
BIF	0	STRAP_BIF_GEN4_DIS_A 0: PCIe GEN 4 supported 1: PCIe GEN 4 not supported
	0	PINSTRAP_BIF_CLK_PM_EN 0: CLKREQ# power management capability is disabled 1: CLKREQ# power management capability is enabled
	0	PINSTRAP_BIF_LC_TX_SWING 0: Full swing mode 1: Reduced swing mode(half swing)
	0	PINSTRAP_BIF_VGA_DIS 0: VGA controller capacity enabled 1: The device won't be recognised as the system's VGA controller
DCE	0 0 0	PINSTRAP_AUD_PORT_CONN[2:0] Number of audio-capable display outputs 0: All endpoints connected 1: 6 endpoints connected 2: 5 endpoints connected 3: 4 endpoints connected 4: 3 endpoints connected 5: 2 endpoints connected 6: 1 endpoint connected 7: 0 endpoints connected Deafault(PINSTRAP5,PINSTRAR4,PINSTRAR3) = 000
	0 0	PINSTRAP_AUD[1:0] 1: Audio for DisplayPort only 2: Audio for DisplayPort and HDMI if dongle is detected 3: Audio for both DisplayPort and HDMI Deafault(GPIO12,GPIO11) = 11
Platform	0 0	PINSTRAP_FIG[1:0] - No definition on NV
	0	PINSTRAP_MVDD_FB_DIVIDER_CONFIG 0: Divider does not exist 1: Divider exists
SMU	1 0 1	PINSTRAP_BFI_MEM_AP_SIZE[2:0] Or PINSTRAP_ROM_CONFIG[2:0] 100 - 512KBIT (ST) M25P05A 101 - 1MBIT (ST) (M25P10A) 101 - 2MBIT (ST) M25P20 101 - 4MBIT (ST) M25P40 101 - 8MBIT (ST) M25P80 100 - 512KBIT (CHINGIS) PM25LV512 101 - 1MBIT (CHINGIS) PM25LV010 Deafault(PINSTRAP2,PINSTRAR1,PINSTRAR0) = 101
	0	PINSTRAP_SMBUS_ADDR 0: 0x41h 1: 0x40h
	1	PINSTRAP_BIOS_ROM_EN 0: Disable the external BIOS ROM device 1: Enable the external BIOS ROM device

MSI CONFIDENTIAL
RD(C) 2019121001 weistang(唐浩健) RMA工程課
劉翰 (30001789)

MICRO-STAR INT'L CO.,LTD

MS-V382

Size	Document Description	Rev
Custom	NAVI14 - GPIO, EXTRA	11

Date: Friday, November 22, 2019 Sheet 4 of 28

(5) NAVI14 XTAL

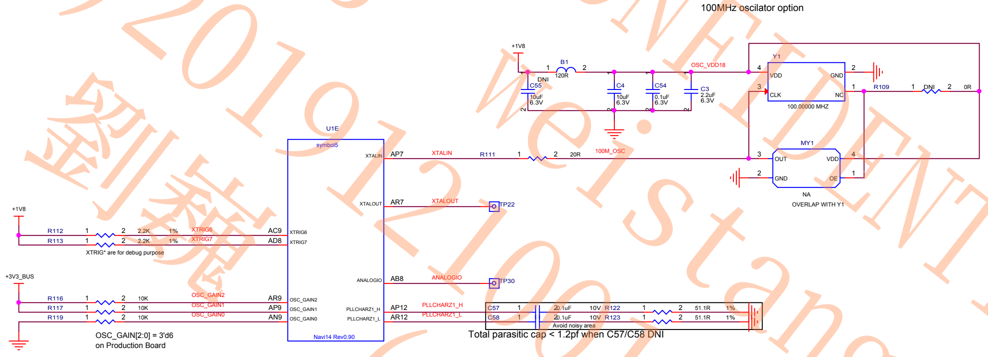
100MHz oscilator option
+1V8
B1
1
2
120R
DNI
C55
10uF
6.3V
C4
10uF
6.3V
C54
0.1uF
6.3V
C3
2.2uF
6.3V
OSC_VDD18
Y1
4
VDD
3
CLK
2
GND
1
NC
100.00000 MHZ
R109
1
DNI
2
0R
MY1
3
OUT
2
GND
4
VDD
1
OE
NA
OVERLAP WITH Y1
U1E
symbol5
XTALIN
AP7
XTALIN
R111
1
2
20R
100M_OSC
XTALOUT
AR7
XTALOUT
TP22
+1V8
R112
1
2
2.2K
1%
XTRIG6
AC9
XTRIG6
R113
1
2
2.2K
1%
XTRIG7
AD8
XTRIG7
XTRIG* are for debug purpose
ANALOGIO
AB8
ANALOGIO
TP30
+3V3_BUS
R116
1
2
10K
OSC_GAIN2
AR9
OSC_GAIN2
R117
1
2
10K
OSC_GAIN1
AP9
OSC_GAIN1
R119
1
2
10K
OSC_GAIN0
AN9
OSC_GAIN0
OSC_GAIN[2:0] = 3'd6
on Production Board
PLLCHARZ1_H
AP12
PLLCHARZ1_H
PLLCHARZ1_L
AR12
PLLCHARZ1_L
C57
1
2
0.1uF
10V
R122
1
2
51.1R
1%
C58
1
2
0.1uF
10V
R123
1
2
51.1R
1%
Avoid noisy area
Total parasitic cap < 1.2pf when C57/C58 DNI
Navi14 Rev0.90

MSI CONFIDENTIAL
00205363
RD(C)201912Z1001
劉巍
weistang(唐浩倢)
(30001789)
RMA工程課

MSI

MICRO-STAR INT'L CO.,LTD

MS-V382

Size	Document Description	Rev
Custom	NAVI14 - XTAL	11

Date: Friday, November 22, 2019 Sheet 5 of 28

(6) NAVI14 POWER AND GND

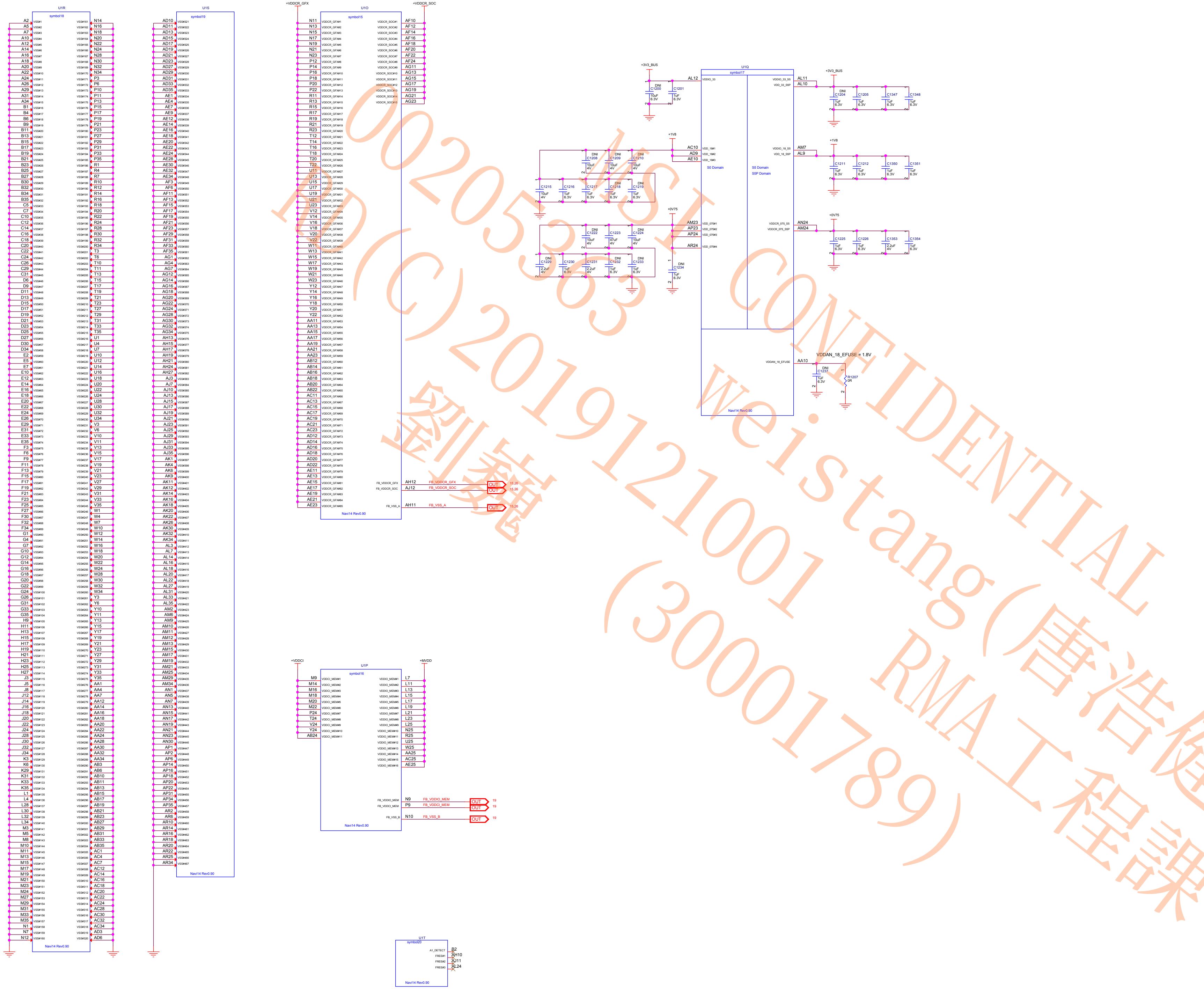
U1R
symbol18
VSS#1 A2
VSS#2 A5
VSS#3 A7
VSS#4 A10
VSS#5 A12
VSS#6 A14
VSS#7 A16
VSS#8 A18
VSS#9 A20
VSS#10 A22
VSS#11 A24
VSS#12 A26
VSS#13 A29
VSS#14 A31
VSS#15 A34
VSS#16 B1
VSS#17 B4
VSS#18 B6
VSS#19 B9
VSS#20 B11
VSS#21 B13
VSS#22 B15
VSS#23 B17
VSS#24 B19
VSS#25 B21
VSS#26 B23
VSS#27 B25
VSS#28 B27
VSS#29 B30
VSS#30 B32
VSS#31 B34
VSS#32 B35
VSS#33 C5
VSS#34 C7
VSS#35 C10
VSS#36 C12
VSS#37 C14
VSS#38 C16
VSS#39 C18
VSS#40 C20
VSS#41 C22
VSS#42 C24
VSS#43 C26
VSS#44 C29
VSS#45 C31
VSS#46 D6
VSS#47 D9
VSS#48 D11
VSS#49 D13
VSS#50 D15
VSS#51 D17
VSS#52 D19
VSS#53 D21
VSS#54 D23
VSS#55 D25
VSS#56 D27
VSS#57 D30
VSS#58 D34
VSS#59 E2
VSS#60 E5
VSS#61 E7
VSS#62 E10
VSS#63 E12
VSS#64 E14
VSS#65 E16
VSS#66 E18
VSS#67 E20
VSS#68 E22
VSS#69 E24
VSS#70 E26
VSS#71 E29
VSS#72 E31
VSS#73 E33
VSS#74 E35
VSS#75 F3
VSS#76 F6
VSS#77 F9
VSS#78 F11
VSS#79 F13
VSS#80 F15
VSS#81 F17
VSS#82 F19
VSS#83 F21
VSS#84 F23
VSS#85 F25
VSS#86 F27
VSS#87 F30
VSS#88 F32
VSS#89 F34
VSS#90 G1
VSS#91 G4
VSS#92 G7
VSS#93 G10
VSS#94 G12
VSS#95 G14
VSS#96 G16
VSS#97 G18
VSS#98 G20
VSS#99 G22
VSS#100 G24
VSS#101 G26
VSS#102 G31
VSS#103 G33
VSS#104 G35
VSS#105 H9
VSS#106 H11
VSS#107 H13
VSS#108 H15
VSS#109 H17
VSS#110 H19
VSS#111 H21
VSS#112 H23
VSS#113 H25
VSS#114 H27
VSS#115 J3
VSS#116 J5
VSS#117 J8
VSS#118 J12
VSS#119 J14
VSS#120 J16
VSS#121 J18
VSS#122 J20
VSS#123 J22
VSS#124 J24
VSS#125 J28
VSS#126 J30
VSS#127 J32
VSS#128 J34
VSS#129 K3
VSS#130 K6
VSS#131 K29
VSS#132 K31
VSS#133 K33
VSS#134 K35
VSS#135 L1
VSS#136 L4
VSS#137 L28
VSS#138 L30
VSS#139 L32
VSS#140 L34
VSS#141 M3
VSS#142 M5
VSS#143 M8
VSS#144 M10
VSS#145 M11
VSS#146 M13
VSS#147 M15
VSS#148 M17
VSS#149 M19
VSS#150 M21
VSS#151 M23
VSS#152 M24
VSS#153 M27
VSS#154 M29
VSS#155 M31
VSS#156 M33
VSS#157 M35
VSS#158 N1
VSS#159 N7
VSS#160 N12
VSS#161 N14
VSS#162 N16
VSS#163 N18
VSS#164 N20
VSS#165 N22
VSS#166 N24
VSS#167 N28
VSS#168 N30
VSS#169 N32
VSS#170 N34
VSS#171 P3
VSS#172 P6
VSS#173 P10
VSS#174 P11
VSS#175 P13
VSS#176 P15
VSS#177 P17
VSS#178 P19
VSS#179 P21
VSS#180 P23
VSS#181 P27
VSS#182 P29
VSS#183 P31
VSS#184 P33
VSS#185 P35
VSS#186 R1
VSS#187 R4
VSS#188 R7
VSS#189 R10
VSS#190 R12
VSS#191 R14
VSS#192 R16
VSS#193 R18
VSS#194 R20
VSS#195 R22
VSS#196 R24
VSS#197 R28
VSS#198 R30
VSS#199 R32
VSS#200 R34
VSS#201 T3
VSS#202 T6
VSS#203 T10
VSS#204 T11
VSS#205 T13
VSS#206 T15
VSS#207 T17
VSS#208 T19
VSS#209 T21
VSS#210 T23
VSS#211 T27
VSS#212 T29
VSS#213 T31
VSS#214 T33
VSS#215 T35
VSS#216 U1
VSS#217 U4
VSS#218 U7
VSS#219 U10
VSS#220 U12
VSS#221 U14
VSS#222 U16
VSS#223 U18
VSS#224 U20
VSS#225 U22
VSS#226 U24
VSS#227 U28
VSS#228 U30
VSS#229 U32
VSS#230 U34
VSS#231 V3
VSS#232 V6
VSS#233 V10
VSS#234 V11
VSS#235 V13
VSS#236 V15
VSS#237 V17
VSS#238 V19
VSS#239 V21
VSS#240 V23
VSS#241 V27
VSS#242 V29
VSS#243 V31
VSS#244 V33
VSS#245 V35
VSS#246 W1
VSS#247 W4
VSS#248 W7
VSS#249 W10
VSS#250 W12
VSS#251 W14
VSS#252 W16
VSS#253 W18
VSS#254 W20
VSS#255 W22
VSS#256 W24
VSS#257 W28
VSS#258 W30
VSS#259 W32
VSS#260 W34
VSS#261 Y3
VSS#262 Y6
VSS#263 Y10
VSS#264 Y11
VSS#265 Y13
VSS#266 Y15
VSS#267 Y17
VSS#268 Y19
VSS#269 Y21
VSS#270 Y23
VSS#271 Y27
VSS#272 Y29
VSS#273 Y31
VSS#274 Y33
VSS#275 Y35
VSS#276 AA1
VSS#277 AA4
VSS#278 AA7
VSS#279 AA12
VSS#280 AA14
VSS#281 AA16
VSS#282 AA18
VSS#283 AA20
VSS#284 AA22
VSS#285 AA24
VSS#286 AA28
VSS#287 AA30
VSS#288 AA32
VSS#289 AA34
VSS#290 AB3
VSS#291 AB6
VSS#292 AB10
VSS#293 AB11
VSS#294 AB13
VSS#295 AB15
VSS#296 AB17
VSS#297 AB19
VSS#298 AB21
VSS#299 AB23
VSS#300 AB27
VSS#301 AB29
VSS#302 AB31
VSS#303 AB33
VSS#304 AB35
VSS#305 AC1
VSS#306 AC4
VSS#307 AC7
VSS#308 AC12
VSS#309 AC14
VSS#310 AC16
VSS#311 AC18
VSS#312 AC20
VSS#313 AC22
VSS#314 AC24
VSS#315 AC28
VSS#316 AC30
VSS#317 AC32
VSS#318 AC34
VSS#319 AD3
VSS#320 AD6
Navi14 Rev0.90
U1S
symbol19
VSS#321 AD10
VSS#322 AD11
VSS#323 AD13
VSS#324 AD15
VSS#325 AD17
VSS#326 AD19
VSS#327 AD21
VSS#328 AD23
VSS#329 AD27
VSS#330 AD29
VSS#331 AD31
VSS#332 AD33
VSS#333 AD35
VSS#334 AE1
VSS#335 AE4
VSS#336 AE7
VSS#337 AE9
VSS#338 AE12
VSS#339 AE14
VSS#340 AE16
VSS#341 AE18
VSS#342 AE20
VSS#343 AE22
VSS#344 AE24
VSS#345 AE28
VSS#346 AE30
VSS#347 AE32
VSS#348 AE34
VSS#349 AF3
VSS#350 AF6
VSS#351 AF11
VSS#352 AF13
VSS#353 AF15
VSS#354 AF17
VSS#355 AF19
VSS#356 AF21
VSS#357 AF23
VSS#358 AF29
VSS#359 AF31
VSS#360 AF33
VSS#361 AF35
VSS#362 AG1
VSS#363 AG4
VSS#364 AG7
VSS#365 AG12
VSS#366 AG14
VSS#367 AG16
VSS#368 AG18
VSS#369 AG20
VSS#370 AG22
VSS#371 AG24
VSS#372 AG28
VSS#373 AG30
VSS#374 AG32
VSS#375 AG34
VSS#376 AH13
VSS#377 AH15
VSS#378 AH17
VSS#379 AH19
VSS#380 AH21
VSS#381 AH24
VSS#382 AH27
VSS#383 AJ3
VSS#384 AJ7
VSS#385 AJ10
VSS#386 AJ13
VSS#387 AJ15
VSS#388 AJ17
VSS#389 AJ19
VSS#390 AJ21
VSS#391 AJ23
VSS#392 AJ25
VSS#393 AJ29
VSS#394 AJ31
VSS#395 AJ33
VSS#396 AJ35
VSS#397 AK1
VSS#398 AK4
VSS#399 AK6
VSS#400 AK9
VSS#401 AK11
VSS#402 AK12
VSS#403 AK14
VSS#404 AK16
VSS#405 AK18
VSS#406 AK20
VSS#407 AK22
VSS#408 AK26
VSS#409 AK30
VSS#410 AK32
VSS#411 AK34
VSS#412 AL3
VSS#413 AL7
VSS#414 AL14
VSS#415 AL16
VSS#416 AL18
VSS#417 AL20
VSS#418 AL22
VSS#419 AL27
VSS#420 AL31
VSS#421 AL33
VSS#422 AL35
VSS#423 AM2
VSS#424 AM6
VSS#425 AM9
VSS#426 AM10
VSS#427 AM11
VSS#428 AM12
VSS#429 AM13
VSS#430 AM15
VSS#431 AM17
VSS#432 AM19
VSS#433 AM21
VSS#434 AM25
VSS#435 AM29
VSS#436 AM34
VSS#437 AN1
VSS#438 AN5
VSS#439 AN7
VSS#440 AN13
VSS#441 AN15
VSS#442 AN17
VSS#443 AN19
VSS#444 AN21
VSS#445 AN23
VSS#446 AN30
VSS#447 AP1
VSS#448 AP2
VSS#449 AP6
VSS#450 AP14
VSS#451 AP16
VSS#452 AP18
VSS#453 AP20
VSS#454 AP22
VSS#455 AP31
VSS#456 AP34
VSS#457 AP35
VSS#458 AR2
VSS#459 AR6
VSS#460 AR10
VSS#461 AR14
VSS#462 AR16
VSS#463 AR18
VSS#464 AR20
VSS#465 AR22
VSS#466 AR25
VSS#467 AR34
Navi14 Rev0.90
+VDDCR_GFX
+VDDCR_SOC
U1O
symbol15
VDDCR_GFX#1 N11
VDDCR_GFX#2 N13
VDDCR_GFX#3 N15
VDDCR_GFX#4 N17
VDDCR_GFX#5 N19
VDDCR_GFX#6 N21
VDDCR_GFX#7 N23
VDDCR_GFX#8 P12
VDDCR_GFX#9 P14
VDDCR_GFX#10 P16
VDDCR_GFX#11 P18
VDDCR_GFX#12 P20
VDDCR_GFX#13 P22
VDDCR_GFX#14 R11
VDDCR_GFX#15 R13
VDDCR_GFX#16 R15
VDDCR_GFX#17 R17
VDDCR_GFX#18 R19
VDDCR_GFX#19 R21
VDDCR_GFX#20 R23
VDDCR_GFX#21 T12
VDDCR_GFX#22 T14
VDDCR_GFX#23 T16
VDDCR_GFX#24 T18
VDDCR_GFX#25 T20
VDDCR_GFX#26 T22
VDDCR_GFX#27 U11
VDDCR_GFX#28 U13
VDDCR_GFX#29 U15
VDDCR_GFX#30 U17
VDDCR_GFX#31 U19
VDDCR_GFX#32 U21
VDDCR_GFX#33 U23
VDDCR_GFX#34 V12
VDDCR_GFX#35 V14
VDDCR_GFX#36 V16
VDDCR_GFX#37 V18
VDDCR_GFX#38 V20
VDDCR_GFX#39 V22
VDDCR_GFX#40 W11
VDDCR_GFX#41 W13
VDDCR_GFX#42 W15
VDDCR_GFX#43 W17
VDDCR_GFX#44 W19
VDDCR_GFX#45 W21
VDDCR_GFX#46 W23
VDDCR_GFX#47 Y12
VDDCR_GFX#48 Y14
VDDCR_GFX#49 Y16
VDDCR_GFX#50 Y18
VDDCR_GFX#51 Y20
VDDCR_GFX#52 Y22
VDDCR_GFX#53 AA11
VDDCR_GFX#54 AA13
VDDCR_GFX#55 AA15
VDDCR_GFX#56 AA17
VDDCR_GFX#57 AA19
VDDCR_GFX#58 AA21
VDDCR_GFX#59 AA23
VDDCR_GFX#60 AB12
VDDCR_GFX#61 AB14
VDDCR_GFX#62 AB16
VDDCR_GFX#63 AB18
VDDCR_GFX#64 AB20
VDDCR_GFX#65 AB22
VDDCR_GFX#66 AC11
VDDCR_GFX#67 AC13
VDDCR_GFX#68 AC15
VDDCR_GFX#69 AC17
VDDCR_GFX#70 AC19
VDDCR_GFX#71 AC21
VDDCR_GFX#72 AC23
VDDCR_GFX#73 AD12
VDDCR_GFX#74 AD14
VDDCR_GFX#75 AD16
VDDCR_GFX#76 AD18
VDDCR_GFX#77 AD20
VDDCR_GFX#78 AD22
VDDCR_GFX#79 AE11
VDDCR_GFX#80 AE13
VDDCR_GFX#81 AE15
VDDCR_GFX#82 AE17
VDDCR_GFX#83 AE19
VDDCR_GFX#84 AE21
VDDCR_GFX#85 AE23
VDDCR_SOC#1 AF10
VDDCR_SOC#2 AF12
VDDCR_SOC#3 AF14
VDDCR_SOC#4 AF16
VDDCR_SOC#5 AF18
VDDCR_SOC#6 AF20
VDDCR_SOC#7 AF22
VDDCR_SOC#8 AF24
VDDCR_SOC#9 AG11
VDDCR_SOC#10 AG13
VDDCR_SOC#11 AG15
VDDCR_SOC#12 AG17
VDDCR_SOC#13 AG19
VDDCR_SOC#14 AG21
VDDCR_SOC#15 AG23
FB_VDDCR_GFX AH12 FB_VDDCR_GFX OUT 15,26
FB_VDDCR_SOC AJ12 FB_VDDCR_SOC OUT 15,26
FB_VSS_A AH11 FB_VSS_A OUT 15,26
Navi14 Rev0.90
+3V3_BUS
DNI C1200 10uF 6.3V
C1201 1uF 6.3V
AL12 VDDIO_33
U1Q
symbol17
+1V8
AC10 VDD_18#1
AD9 VDD_18#2
AE10 VDD_18#3
DNI C1208 10uF 4V
DNI C1209 10uF 4V
DNI C1210 10uF 4V
C1215 10uF 4V
C1216 1uF 6.3V
C1217 1uF 6.3V
DNI C1218 1uF 6.3V
DNI C1219 1uF 6.3V
S0 Domain
S5 Domain
S5P Domain
+0V75
AM23 VDD_075#1
AP23 VDD_075#2
AP24 VDD_075#3
AR24 VDD_075#4
DNI C1222 10uF 4V
C1223 47uF 4V
DNI C1224 10uF 4V
DNI C1229 2.2uF 4V
C1230 1uF 6.3V
C1231 2.2uF 4V
DNI C1232 1uF 6.3V
DNI C1233 1uF 6.3V
DNI C1234 1uF 6.3V
VDDIO_33_S5 AL11
VDD_33_S5P AL10
+3V3_BUS
DNI C1204 1uF 6.3V
C1205 1uF 6.3V
C1347 1uF 6.3V
C1348 1uF 6.3V
VDDIO_18_S5 AM7
VDD_18_S5P AL9
+1V8
C1211 1uF 6.3V
C1212 1uF 6.3V
C1350 1uF 6.3V
C1351 1uF 6.3V
VDDCR_075_S5 AN24
VDDCR_075_S5P AM24
+0V75
C1225 1uF 6.3V
C1226 1uF 6.3V
C1353 2.2uF 4V
C1354 1uF 6.3V
VDDAN_18_EFUSE AA10
VDDAN_18_EFUSE = 1.8V
DNI C1237 1uF 6.3V
R1207 0R
Navi14 Rev0.90
+VDDCI
+MVDD
U1P
symbol16
VDDCI_MEM#1 M9
VDDCI_MEM#2 M14
VDDCI_MEM#3 M16
VDDCI_MEM#4 M18
VDDCI_MEM#5 M20
VDDCI_MEM#6 M22
VDDCI_MEM#7 P24
VDDCI_MEM#8 T24
VDDCI_MEM#9 V24
VDDCI_MEM#10 Y24
VDDCI_MEM#11 AB24
VDDIO_MEM#1 L7
VDDIO_MEM#2 L11
VDDIO_MEM#3 L13
VDDIO_MEM#4 L15
VDDIO_MEM#5 L17
VDDIO_MEM#6 L19
VDDIO_MEM#7 L21
VDDIO_MEM#8 L23
VDDIO_MEM#9 L25
VDDIO_MEM#10 N25
VDDIO_MEM#11 R25
VDDIO_MEM#12 U25
VDDIO_MEM#13 W25
VDDIO_MEM#14 AA25
VDDIO_MEM#15 AC25
VDDIO_MEM#16 AE25
FB_VDDIO_MEM N9 FB_VDDIO_MEM OUT 19
FB_VDDCI_MEM P9 FB_VDDCI_MEM OUT 19
FB_VSS_B N10 FB_VSS_B OUT 19
Navi14 Rev0.90
U1T
symbol20
A1_DETECT B2
FREE#1 AH10
FREE#2 AJ11
FREE#3 AL24
Navi14 Rev0.90

MSI CONFIDENTIAL
00205363
KD(C)20191210001 劉巍
weistang(唐浩倢)
(30001789) RMA工程課

MICRO-STAR INT'L CO.,LTD
MS-V382
Size Custom
Document Description NAVI14 - POWER and GND
Rev 11
Date: Friday, November 22, 2019 Sheet 6 of 28

(7) NAVI14 Decaps

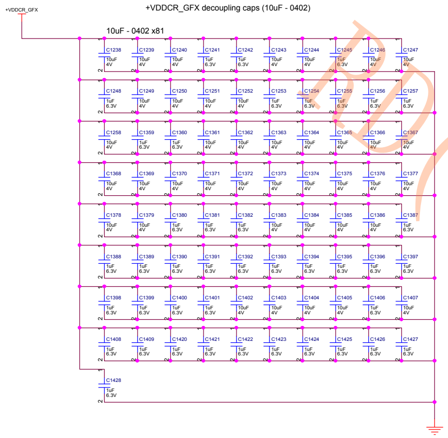
+VDDCR_GFX
+VDDCR_GFX decoupling caps (10uF - 0402)
10uF - 0402 x81
C1238 10uF 4V
C1239 10uF 4V
C1240 10uF 4V
C1241 1uF 6.3V
C1242 1uF 6.3V
C1243 10uF 4V
C1244 10uF 4V
C1245 1uF 6.3V
C1246 10uF 4V
C1247 10uF 4V
C1248 1uF 6.3V
C1249 10uF 4V
C1250 10uF 4V
C1251 10uF 4V
C1252 10uF 4V
C1253 1uF 6.3V
C1254 1uF 6.3V
C1255 1uF 6.3V
C1256 1uF 6.3V
C1257 1uF 6.3V
C1258 10uF 4V
C1359 1uF 6.3V
C1360 1uF 6.3V
C1361 10uF 4V
C1362 10uF 4V
C1363 10uF 4V
C1364 10uF 4V
C1365 10uF 4V
C1366 10uF 4V
C1367 10uF 4V
C1368 10uF 4V
C1369 10uF 4V
C1370 10uF 4V
C1371 10uF 4V
C1372 10uF 4V
C1373 10uF 4V
C1374 10uF 4V
C1375 10uF 4V
C1376 10uF 4V
C1377 10uF 4V
C1378 10uF 4V
C1379 10uF 4V
C1380 1uF 6.3V
C1381 1uF 6.3V
C1382 1uF 6.3V
C1383 10uF 4V
C1384 10uF 4V
C1385 10uF 4V
C1386 10uF 4V
C1387 1uF 6.3V
C1388 1uF 6.3V
C1389 1uF 6.3V
C1390 1uF 6.3V
C1391 1uF 6.3V
C1392 1uF 6.3V
C1393 1uF 6.3V
C1394 1uF 6.3V
C1395 1uF 6.3V
C1396 1uF 6.3V
C1397 1uF 6.3V
C1398 1uF 6.3V
C1399 1uF 6.3V
C1400 1uF 6.3V
C1401 1uF 6.3V
C1402 10uF 4V
C1403 10uF 4V
C1404 10uF 4V
C1405 10uF 4V
C1406 1uF 6.3V
C1407 10uF 4V
C1408 1uF 6.3V
C1409 1uF 6.3V
C1420 1uF 6.3V
C1421 1uF 6.3V
C1422 1uF 6.3V
C1423 1uF 6.3V
C1424 1uF 6.3V
C1425 1uF 6.3V
C1426 1uF 6.3V
C1427 1uF 6.3V
C1428 1uF 6.3V

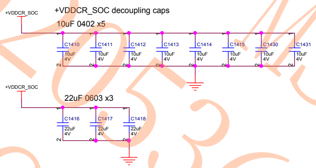
+VDDCR_SOC
+VDDCR_SOC decoupling caps
10uF 0402 x5
C1410 10uF 4V
C1411 10uF 4V
C1412 10uF 4V
C1413 10uF 4V
C1414 10uF 4V
C1415 10uF 4V
C1430 10uF 4V
C1431 10uF 4V
+VDDCR_SOC
22uF 0603 x3
C1416 22uF 4V
C1417 22uF 4V
C1418 22uF 4V

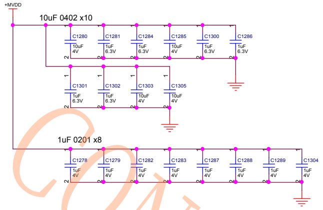
+MVDD
10uF 0402 x10
C1280 10uF 4V
C1281 1uF 6.3V
C1284 1uF 6.3V
C1285 10uF 4V
C1300 1uF 6.3V
C1286 1uF 6.3V
C1301 1uF 6.3V
C1302 1uF 6.3V
C1303 10uF 4V
C1305 10uF 4V
1uF 0201 x8
C1278 1uF 4V
C1279 1uF 4V
C1282 1uF 4V
C1283 1uF 4V
C1287 1uF 4V
C1288 1uF 4V
C1289 1uF 4V
C1304 1uF 4V

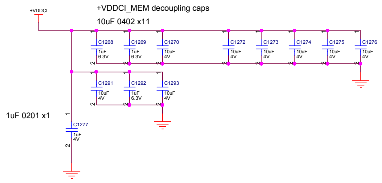
+VDDCI
+VDDCI_MEM decoupling caps
10uF 0402 x11
C1268 1uF 6.3V
C1269 1uF 6.3V
C1270 10uF 4V
C1272 10uF 4V
C1273 10uF 4V
C1274 10uF 4V
C1275 10uF 4V
C1276 10uF 4V
C1291 10uF 4V
C1292 1uF 6.3V
C1293 10uF 4V
1uF 0201 x1
C1277 1uF 4V

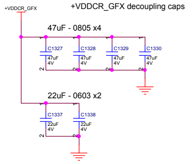
+VDDCR_GFX
+VDDCR_GFX decoupling caps
47uF - 0805 x4
C1327 47uF 4V
C1328 47uF 4V
C1329 47uF 4V
C1330 47uF 4V
22uF - 0603 x2
C1337 22uF 4V
C1338 22uF 4V

00205363 MSI CONFIDENTIAL
RD(C)20191210001 weistang(唐浩倢)
劉巍 (30001789) RMA工程課

MICRO-STAR INT'L CO.,LTD

MS-V382

Size	Document Description	Rev
Custom	NAVI14 - Decaps	11

Date: Friday, November 22, 2019 Sheet 7 of 28

(8) NAVI14 MEM INTERFACE CH A/B

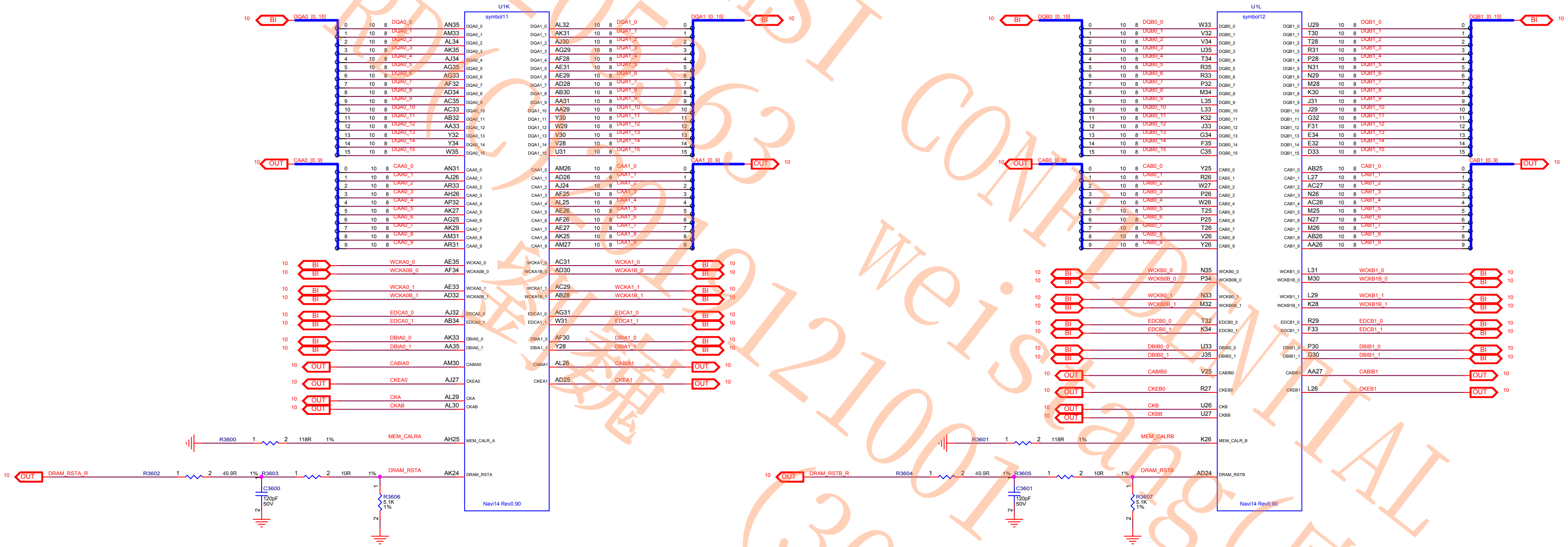
U1K
symbol11
DQA0_[0..15]
DQA0_0 AN35, DQA0_1 AM33, DQA0_2 AL34, DQA0_3 AK35, DQA0_4 AJ34, DQA0_5 AG35, DQA0_6 AG33, DQA0_7 AF32, DQA0_8 AD34, DQA0_9 AC35, DQA0_10 AC33, DQA0_11 AB32, DQA0_12 AA33, DQA0_13 Y32, DQA0_14 Y34, DQA0_15 W35
DQA1_[0..15]
DQA1_0 AL32, DQA1_1 AK31, DQA1_2 AJ30, DQA1_3 AG29, DQA1_4 AF28, DQA1_5 AE31, DQA1_6 AE29, DQA1_7 AD28, DQA1_8 AB30, DQA1_9 AA31, DQA1_10 AA29, DQA1_11 Y30, DQA1_12 W29, DQA1_13 V30, DQA1_14 V28, DQA1_15 U31
CAA0_[0..9]
CAA0_0 AN31, CAA0_1 AJ26, CAA0_2 AR33, CAA0_3 AH26, CAA0_4 AP32, CAA0_5 AK27, CAA0_6 AG25, CAA0_7 AK29, CAA0_8 AM31, CAA0_9 AR31
CAA1_[0..9]
CAA1_0 AM26, CAA1_1 AD26, CAA1_2 AJ24, CAA1_3 AF25, CAA1_4 AL25, CAA1_5 AE26, CAA1_6 AF26, CAA1_7 AE27, CAA1_8 AK25, CAA1_9 AM27
WCKA0_0 AE35, WCKA0B_0 AF34, WCKA0_1 AE33, WCKA0B_1 AD32
WCKA1_0 AC31, WCKA1B_0 AD30, WCKA1_1 AC29, WCKA1B_1 AB28
EDCA0_0 AJ32, EDCA0_1 AB34, EDCA1_0 AG31, EDCA1_1 W31
DBIA0_0 AK33, DBIA0_1 AA35, DBIA1_0 AF30, DBIA1_1 Y28
CABIA0 AM30, CABIA1 AL26
CKEA0 AJ27, CKEA1 AD25
CKA AL29, CKAB AL30
MEM_CALRA AH25 MEM_CALR_A
R3600 118R 1%
DRAM_RSTA AK24
DRAM_RSTA_R
R3602 49.9R 1%
R3603 10R 1%
C3600 120pF 50V
R3606 5.1K 1%
Navi14 Rev0.90
BI
OUT
U1L
symbol12
DQB0_[0..15]
DQB0_0 W33, DQB0_1 V32, DQB0_2 V34, DQB0_3 U35, DQB0_4 T34, DQB0_5 R35, DQB0_6 R33, DQB0_7 P32, DQB0_8 M34, DQB0_9 L35, DQB0_10 L33, DQB0_11 K32, DQB0_12 J33, DQB0_13 G34, DQB0_14 F35, DQB0_15 C35
DQB1_[0..15]
DQB1_0 U29, DQB1_1 T30, DQB1_2 T28, DQB1_3 R31, DQB1_4 P28, DQB1_5 N31, DQB1_6 N29, DQB1_7 M28, DQB1_8 K30, DQB1_9 J31, DQB1_10 J29, DQB1_11 G32, DQB1_12 F31, DQB1_13 E34, DQB1_14 E32, DQB1_15 D33
CAB0_[0..9]
CAB0_0 Y25, CAB0_1 R26, CAB0_2 W27, CAB0_3 P26, CAB0_4 W26, CAB0_5 T25, CAB0_6 P25, CAB0_7 T26, CAB0_8 V26, CAB0_9 Y26
CAB1_[0..9]
CAB1_0 AB25, CAB1_1 L27, CAB1_2 AC27, CAB1_3 N26, CAB1_4 AC26, CAB1_5 M25, CAB1_6 N27, CAB1_7 M26, CAB1_8 AB26, CAB1_9 AA26
WCKB0_0 N35, WCKB0B_0 P34, WCKB0_1 N33, WCKB0B_1 M32
WCKB1_0 L31, WCKB1B_0 M30, WCKB1_1 L29, WCKB1B_1 K28
EDCB0_0 T32, EDCB0_1 K34, EDCB1_0 R29, EDCB1_1 F33
DBIB0_0 U33, DBIB0_1 J35, DBIB1_0 P30, DBIB1_1 G30
CABIB0 V25, CABIB1 AA27
CKEB0 R27, CKEB1 L26
CKB U26, CKBB U27
MEM_CALRB K26 MEM_CALR_B
R3601 118R 1%
DRAM_RSTB AD24
DRAM_RSTB_R
R3604 49.9R 1%
R3605 10R 1%
C3601 120pF 50V
R3607 5.1K 1%
Navi14 Rev0.90

MSI CONFIDENTIAL
weis.tang(唐浩維)
RMA工程課
00205263
(30001789)

MICRO-STAR INT'L CO.,LTD

MS-V382

Size	Document Description	Rev
Custom	NAVI14 - MEM CH AB	11

Date: Friday, November 22, 2019 | Sheet 8 of 28

(9) NAVI14 MEM INTERFACE CH C/D

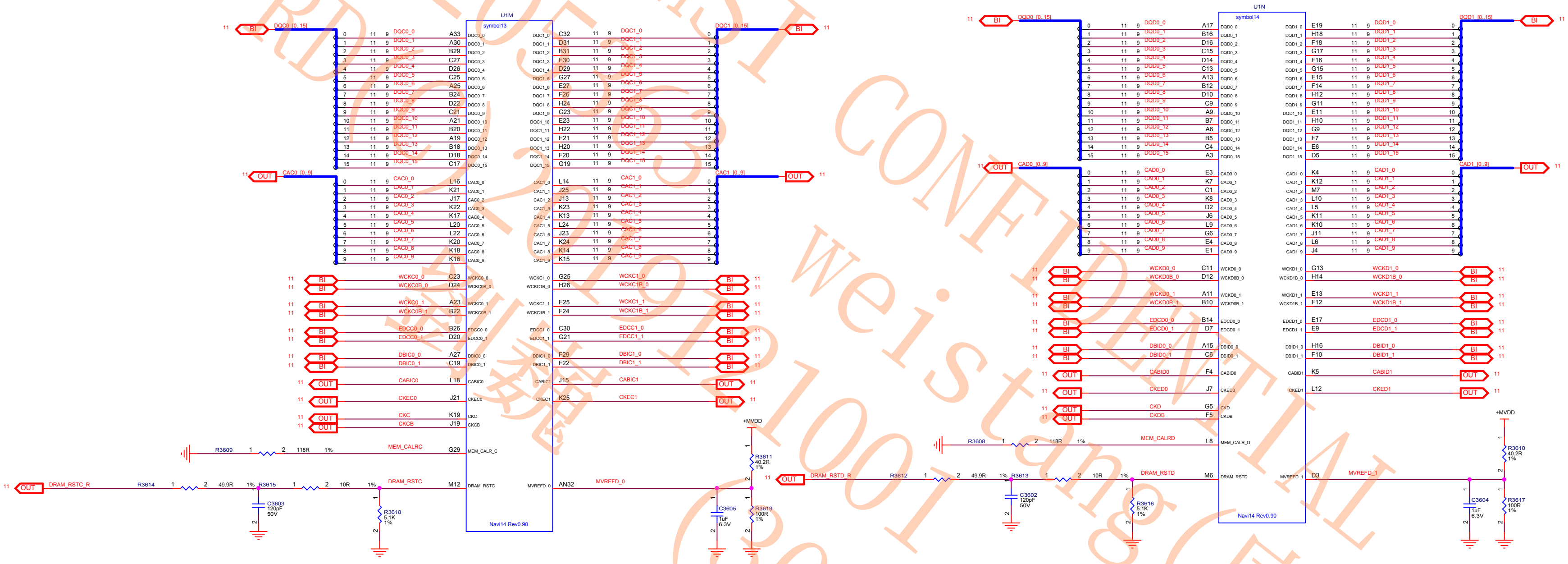
U1M
symbol13
Navi14 Rev0.90
DQC0_[0..15]
BI
DQC0_0 A33 DQC0_0
DQC0_1 A30 DQC0_1
DQC0_2 B29 DQC0_2
DQC0_3 C27 DQC0_3
DQC0_4 D26 DQC0_4
DQC0_5 C25 DQC0_5
DQC0_6 A25 DQC0_6
DQC0_7 B24 DQC0_7
DQC0_8 D22 DQC0_8
DQC0_9 C21 DQC0_9
DQC0_10 A21 DQC0_10
DQC0_11 B20 DQC0_11
DQC0_12 A19 DQC0_12
DQC0_13 B18 DQC0_13
DQC0_14 D18 DQC0_14
DQC0_15 C17 DQC0_15
CAC0_[0..9]
OUT
CAC0_0 L16 CAC0_0
CAC0_1 K21 CAC0_1
CAC0_2 J17 CAC0_2
CAC0_3 K22 CAC0_3
CAC0_4 K17 CAC0_4
CAC0_5 L20 CAC0_5
CAC0_6 L22 CAC0_6
CAC0_7 K20 CAC0_7
CAC0_8 K18 CAC0_8
CAC0_9 K16 CAC0_9
WCKC0_0 C23 WCKC0_0
WCKC0B_0 D24 WCKC0B_0
WCKC0_1 A23 WCKC0_1
WCKC0B_1 B22 WCKC0B_1
EDCC0_0 B26 EDCC0_0
EDCC0_1 D20 EDCC0_1
DBIC0_0 A27 DBIC0_0
DBIC0_1 C19 DBIC0_1
CABIC0 L18 CABIC0
CKEC0 J21 CKEC0
CKC K19 CKC
CKCB J19 CKCB
MEM_CALRC G29 MEM_CALR_C
R3609 1 2 118R 1%
DRAM_RSTC M12 DRAM_RSTC
DRAM_RSTC_R
R3614 1 2 49.9R 1%
R3615 1 2 10R 1%
C3603 120pF 50V
R3618 5.1K 1%
DQC1_0 C32 DQC1_0
DQC1_1 D31 DQC1_1
DQC1_2 B31 DQC1_2
DQC1_3 E30 DQC1_3
DQC1_4 D29 DQC1_4
DQC1_5 G27 DQC1_5
DQC1_6 E27 DQC1_6
DQC1_7 F26 DQC1_7
DQC1_8 H24 DQC1_8
DQC1_9 G23 DQC1_9
DQC1_10 E23 DQC1_10
DQC1_11 H22 DQC1_11
DQC1_12 E21 DQC1_12
DQC1_13 H20 DQC1_13
DQC1_14 F20 DQC1_14
DQC1_15 G19 DQC1_15
DQC1_[0..15]
CAC1_[0..9]
CAC1_0 L14 CAC1_0
CAC1_1 J25 CAC1_1
CAC1_2 J13 CAC1_2
CAC1_3 K23 CAC1_3
CAC1_4 K13 CAC1_4
CAC1_5 L24 CAC1_5
CAC1_6 J23 CAC1_6
CAC1_7 K24 CAC1_7
CAC1_8 K14 CAC1_8
CAC1_9 K15 CAC1_9
WCKC1_0 G25 WCKC1_0
WCKC1B_0 H26 WCKC1B_0
WCKC1_1 E25 WCKC1_1
WCKC1B_1 F24 WCKC1B_1
EDCC1_0 C30 EDCC1_0
EDCC1_1 G21 EDCC1_1
DBIC1_0 F29 DBIC1_0
DBIC1_1 F22 DBIC1_1
CABIC1 J15 CABIC1
CKEC1 K25 CKEC1
MVREFD_0 AN32 MVREFD_0
+MVDD
R3611 40.2R 1%
C3605 1uF 6.3V
R3619 100R 1%
U1N
symbol14
Navi14 Rev0.90
DQD0_[0..15]
DQD0_0 A17 DQD0_0
DQD0_1 B16 DQD0_1
DQD0_2 D16 DQD0_2
DQD0_3 C15 DQD0_3
DQD0_4 D14 DQD0_4
DQD0_5 C13 DQD0_5
DQD0_6 A13 DQD0_6
DQD0_7 B12 DQD0_7
DQD0_8 D10 DQD0_8
DQD0_9 C9 DQD0_9
DQD0_10 A9 DQD0_10
DQD0_11 B7 DQD0_11
DQD0_12 A6 DQD0_12
DQD0_13 B5 DQD0_13
DQD0_14 C4 DQD0_14
DQD0_15 A3 DQD0_15
CAD0_[0..9]
CAD0_0 E3 CAD0_0
CAD0_1 K7 CAD0_1
CAD0_2 C1 CAD0_2
CAD0_3 K8 CAD0_3
CAD0_4 D2 CAD0_4
CAD0_5 J6 CAD0_5
CAD0_6 L9 CAD0_6
CAD0_7 G6 CAD0_7
CAD0_8 E4 CAD0_8
CAD0_9 E1 CAD0_9
WCKD0_0 C11 WCKD0_0
WCKD0B_0 D12 WCKD0B_0
WCKD0_1 A11 WCKD0_1
WCKD0B_1 B10 WCKD0B_1
EDCD0_0 B14 EDCD0_0
EDCD0_1 D7 EDCD0_1
DBID0_0 A15 DBID0_0
DBID0_1 C6 DBID0_1
CABID0 F4 CABID0
CKED0 J7 CKED0
CKD G5 CKD
CKDB F5 CKDB
MEM_CALRD L8 MEM_CALR_D
R3608 1 2 118R 1%
DRAM_RSTD M6 DRAM_RSTD
DRAM_RSTD_R
R3612 1 2 49.9R 1%
R3613 1 2 10R 1%
C3602 120pF 50V
R3616 5.1K 1%
DQD1_0 E19 DQD1_0
DQD1_1 H18 DQD1_1
DQD1_2 F18 DQD1_2
DQD1_3 G17 DQD1_3
DQD1_4 F16 DQD1_4
DQD1_5 G15 DQD1_5
DQD1_6 E15 DQD1_6
DQD1_7 F14 DQD1_7
DQD1_8 H12 DQD1_8
DQD1_9 G11 DQD1_9
DQD1_10 E11 DQD1_10
DQD1_11 H10 DQD1_11
DQD1_12 G9 DQD1_12
DQD1_13 F7 DQD1_13
DQD1_14 E6 DQD1_14
DQD1_15 D5 DQD1_15
DQD1_[0..15]
CAD1_[0..9]
CAD1_0 K4 CAD1_0
CAD1_1 K12 CAD1_1
CAD1_2 M7 CAD1_2
CAD1_3 L10 CAD1_3
CAD1_4 L5 CAD1_4
CAD1_5 K11 CAD1_5
CAD1_6 K10 CAD1_6
CAD1_7 J11 CAD1_7
CAD1_8 L6 CAD1_8
CAD1_9 J4 CAD1_9
WCKD1_0 G13 WCKD1_0
WCKD1B_0 H14 WCKD1B_0
WCKD1_1 E13 WCKD1_1
WCKD1B_1 F12 WCKD1B_1
EDCD1_0 E17 EDCD1_0
EDCD1_1 E9 EDCD1_1
DBID1_0 H16 DBID1_0
DBID1_1 F10 DBID1_1
CABID1 K5 CABID1
CKED1 L12 CKED1
MVREFD_1 D3 MVREFD_1
+MVDD
R3610 40.2R 1%
C3604 1uF 6.3V
R3617 100R 1%
11
9

MSI CONFIDENTIAL
weistang(唐浩倢)
20191210001
(30001789)
RMA工程課

MICRO-STAR INT'L CO.,LTD

MS-V382

Size	Document Description	Rev
Custom	NAVI14 - MEM CH CD	11

Date: Friday, November 22, 2019 Sheet 9 of 28

(10) GDDR6x16 CHAB Memory

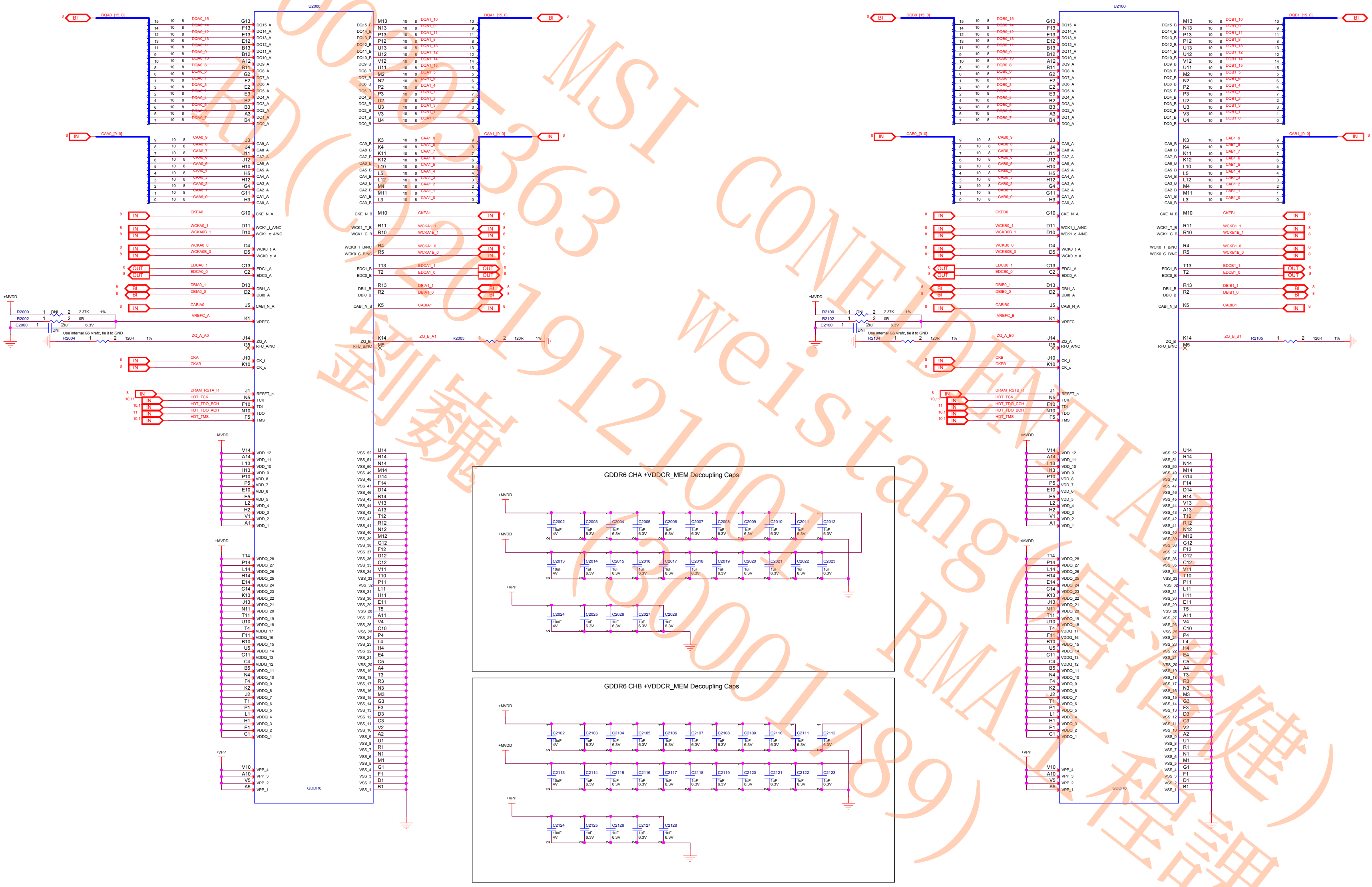
U2000
U2100
GDDR6
DQA0_[15..0]
DQA1_[15..0]
DQB0_[15..0]
DQB1_[15..0]
CAA0_[9..0]
CAA1_[9..0]
CAB0_[9..0]
CAB1_[9..0]
BI
IN
OUT
CKEA0
CKEA1
CKEB0
CKEB1
WCKA0_1
WCKA0B_1
WCKA0_0
WCKA0B_0
WCKA1_1
WCKA1B_1
WCKA1_0
WCKA1B_0
WCKB0_1
WCKB0B_1
WCKB0_0
WCKB0B_0
WCKB1_1
WCKB1B_1
WCKB1_0
WCKB1B_0
EDCA0_1
EDCA0_0
EDCA1_1
EDCA1_0
EDCB0_1
EDCB0_0
EDCB1_1
EDCB1_0
DBIA0_1
DBIA0_0
DBIA1_1
DBIA1_0
DBIB0_1
DBIB0_0
DBIB1_1
DBIB1_0
CABIA0
CABIA1
CABIB0
CABIB1
VREFC_A
VREFC_B
ZQ_A_A0
ZQ_B_A1
ZQ_A_B0
ZQ_B_B1
CKA
CKAB
CKB
CKBB
DRAM_RSTA_R
DRAM_RSTB_R
HDT_TCK
HDT_TDO_BCH
HDT_TDO_ACH
HDT_TDO_CCH
HDT_TMS
+MVDD
+VPP
R2000 DNI 2.37K 1%
R2002 0R
C2000 1uF 6.3V DNI
R2004 120R 1%
R2005 120R 1%
R2100 DNI 2.37K 1%
R2102 0R
C2100 1uF 6.3V DNI
R2104 120R 1%
R2105 120R 1%
Use internal G6 Vrefc, tie it to GND
CKE_N_A
CKE_N_B
WCK1_t_A/NC
WCK1_c_A/NC
WCK0_t_A
WCK0_c_A
WCK1_T_B
WCK1_C_B
WCK0_T_B/NC
WCK0_C_B/NC
EDC1_A
EDC0_A
EDC1_B
EDC0_B
DBI1_A
DBI0_A
DBI1_B
DBI0_B
CABI_N_A
CABI_N_B
VREFC
ZQ_A
ZQ_B
RFU_A/NC
RFU_B/NC
CK_t
CK_c
RESET_n
TCK
TDI
TDO
TMS
VDD_1 … VDD_12
VDDQ_1 … VDDQ_28
VPP_1 … VPP_4
VSS_1 … VSS_52
GDDR6 CHA +VDDCR_MEM Decoupling Caps
C2002 10uF 4V
C2003 C2004 C2005 C2006 C2007 C2008 C2009 C2010 C2011 C2012 1uF 6.3V
C2013 10uF 4V
C2014 C2015 C2016 C2017 C2018 C2019 C2020 C2021 C2022 C2023 1uF 6.3V
C2024 10uF 4V
C2025 C2026 C2027 C2028 1uF 6.3V
GDDR6 CHB +VDDCR_MEM Decoupling Caps
C2102 10uF 4V
C2103 C2104 C2105 C2106 C2107 C2108 C2109 C2110 C2111 C2112 1uF 6.3V
C2113 10uF 4V
C2114 C2115 C2116 C2117 C2118 C2119 C2120 C2121 C2122 C2123 1uF 6.3V
C2124 10uF 4V
C2125 C2126 C2127 C2128 1uF 6.3V

MSI CONFIDENTIAL weistang(唐浩棟) RMA_程課
0096363 RD(0)2019121001 (30001789) 劉巍

MICRO-STAR INT'L CO.,LTD

MS-V382

Size	Document Description	Rev
Custom	GDDR6 x16 - MEM CH AB	11

Date: Friday, November 22, 2019 | Sheet 10 of 28

(11) GDDR6x16 CHCD Memory

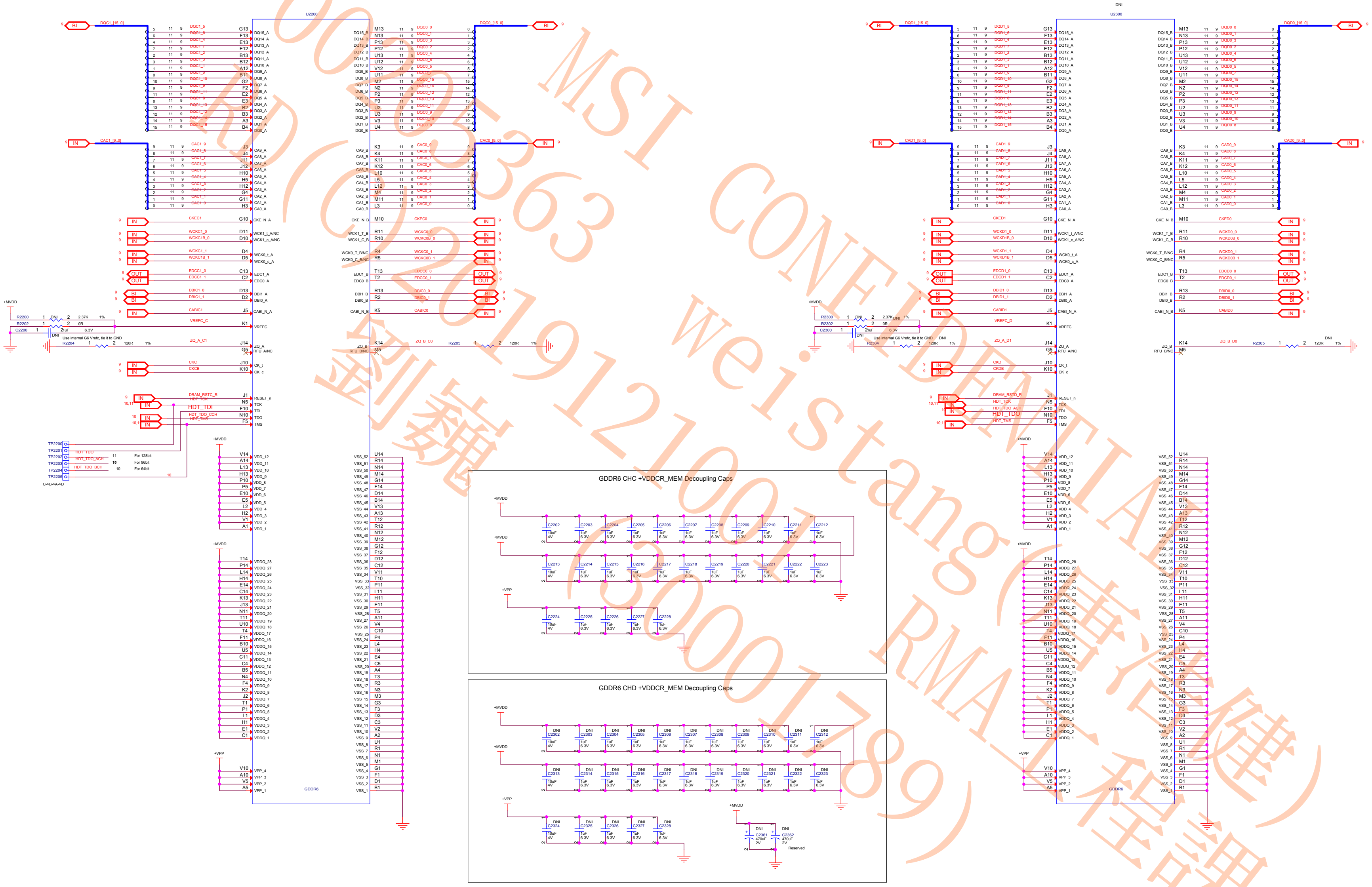
U2200
U2300
DNI
GDDR6
DQC1_[15..0]
DQC0_[15..0]
DQD1_[15..0]
DQD0_[15..0]
CAC1_[9..0]
CAC0_[9..0]
CAD1_[9..0]
CAD0_[9..0]
BI
IN
OUT
CKEC1
CKEC0
CKED1
CKED0
WCKC1_0
WCKC1B_0
WCKC1_1
WCKC1B_1
WCKC0_0
WCKC0B_0
WCKC0_1
WCKC0B_1
WCKD1_0
WCKD1B_0
WCKD1_1
WCKD1B_1
WCKD0_0
WCKD0B_0
WCKD0_1
WCKD0B_1
EDCC1_0
EDCC1_1
EDCC0_0
EDCC0_1
EDCD1_0
EDCD1_1
EDCD0_0
EDCD0_1
DBIC1_0
DBIC1_1
DBIC0_0
DBIC0_1
DBID1_0
DBID1_1
DBID0_0
DBID0_1
CABIC1
CABIC0
CABID1
CABID0
VREFC_C
VREFC_D
ZQ_A_C1
ZQ_B_C0
ZQ_A_D1
ZQ_B_D0
CKC
CKCB
CKD
CKDB
DRAM_RSTC_R
DRAM_RSTD_R
HDT_TCK
HDT_TDI
HDT_TDO_CCH
HDT_TDO_ACH
HDT_TDO
HDT_TMS
HDT_TDO_BCH
+MVDD
+VPP
R2200 1 DNI 2 2.37K 1%
R2202 1 2 0R
C2200 1 DNI 2 1uF 6.3V
Use internal G6 Vrefc, tie it to GND
R2204 1 2 120R 1%
R2205 1 2 120R 1%
R2300 1 DNI 2 2.37K DNI 1%
R2302 1 2 0R
C2300 1 DNI 2 1uF 6.3V
R2304 1 2 120R 1%
R2305 1 2 120R 1%
TP2200
TP2201
TP2202
TP2203
TP2204
TP2205
For 128bit
For 96bit
For 64bit
C->B->A->D
RESET_n
TCK
TDI
TDO
TMS
VREFC
ZQ_A
ZQ_B
RFU_A/NC
RFU_B/NC
CK_t
CK_c
CKE_N_A
CKE_N_B
CABI_N_A
CABI_N_B
GDDR6 CHC +VDDCR_MEM Decoupling Caps
C2202 10uF 4V
C2203 – C2212 1uF 6.3V
C2213 10uF 4V
C2214 – C2223 1uF 6.3V
C2224 10uF 4V
C2225 – C2228 1uF 6.3V
GDDR6 CHD +VDDCR_MEM Decoupling Caps
DNI
C2302 10uF 4V
C2303 – C2312 1uF 6.3V
C2313 10uF 4V
C2314 – C2323 1uF 6.3V
C2324 10uF 4V
C2325 – C2328 1uF 6.3V
C2361 470uF 2V
C2362 470uF 2V
Reserved

MSI CONFIDENTIAL
weistang

MICRO-STAR INT'L CO.,LTD

MS-V382

Size: Custom
Document Description: GDDR6 x16 - MEM CH CD
Rev: 11
Date: Friday, November 22, 2019
Sheet 11 of 28

(12) TMDP AB

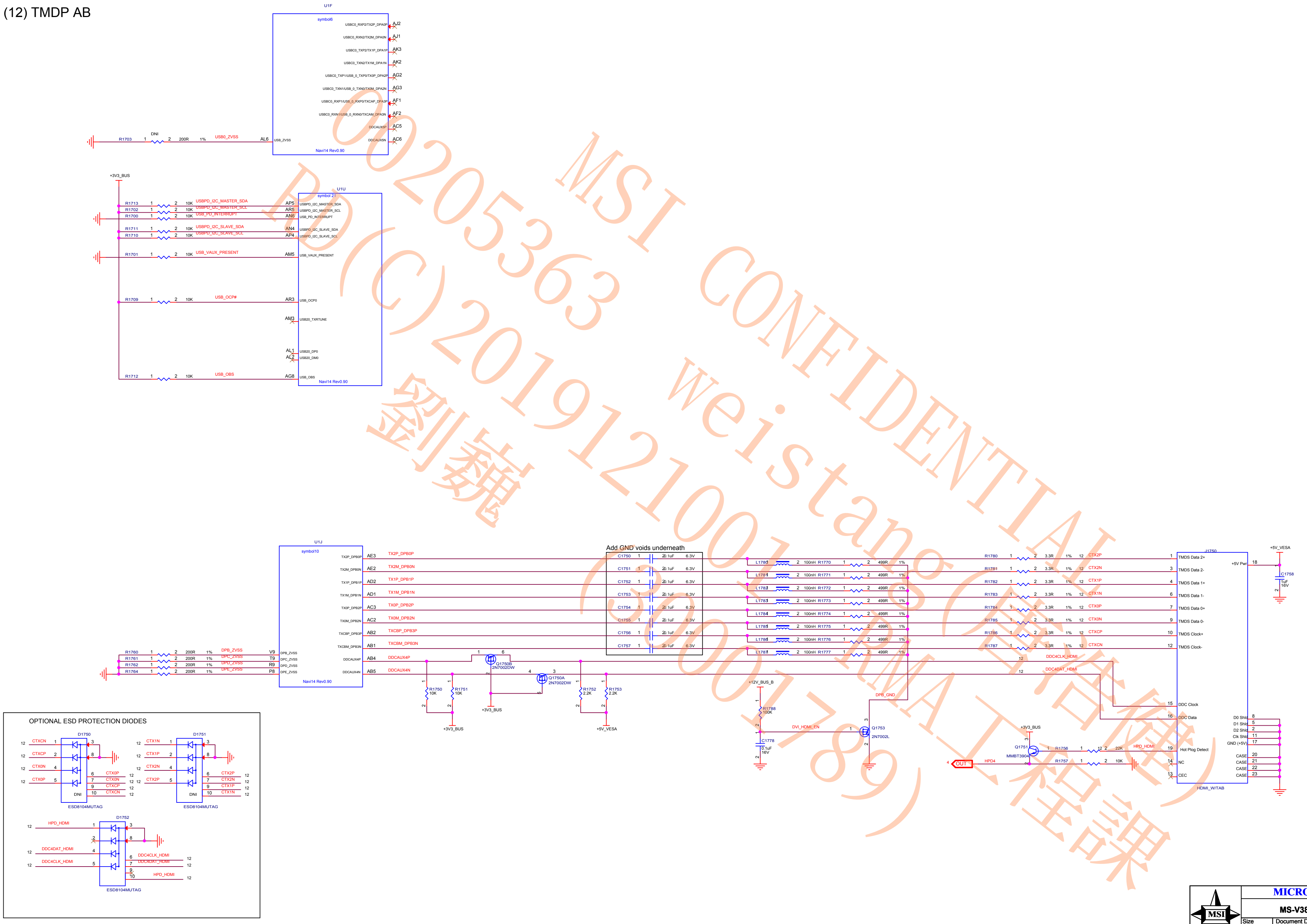
U1F
symbol6
USBC0_RXP2/TX2P_DPA0P AJ2
USBC0_RXN2/TX2M_DPA0N AJ1
USBC0_TXP2/TX1P_DPA1P AK3
USBC0_TXN2/TX1M_DPA1N AK2
USBC0_TXP1/USB_0_TXP0/TX0P_DPA2P AG2
USBC0_TXN1/USB_0_TXN0/TX0M_DPA2N AG3
USBC0_RXP1/USB_0_RXP0/TXCAP_DPA3P AF1
USBC0_RXN1/USB_0_RXN0/TXCAM_DPA3N AF2
DDCAUX5P AC5
DDCAUX5N AC6
USB_ZVSS AL6
Navi14 Rev0.90
R1703 DNI 1 2 200R 1% USB0_ZVSS
+3V3_BUS
U1U
symbol 21
R1713 1 2 10K USBPD_I2C_MASTER_SDA AP5 USBPD_I2C_MASTER_SDA
R1702 1 2 10K USBPD_I2C_MASTER_SCL AR5 USBPD_I2C_MASTER_SCL
R1700 1 2 10K USB_PD_INTERRUPT AN6 USB_PD_INTERRUPT
R1711 1 2 10K USBPD_I2C_SLAVE_SDA AN4 USBPD_I2C_SLAVE_SDA
R1710 1 2 10K USBPD_I2C_SLAVE_SCL AP4 USBPD_I2C_SLAVE_SCL
R1701 1 2 10K USB_VAUX_PRESENT AM5 USB_VAUX_PRESENT
R1709 1 2 10K USB_OCP# AR3 USB_OCP0
AM3 USB20_TXRTUNE
AL1 USB20_DP0
AL2 USB20_DM0
R1712 1 2 10K USB_OBS AG8 USB_OBS
Navi14 Rev0.90
U1J
symbol10
TX2P_DPB0P AE3 TX2P_DPB0P
TX2M_DPB0N AE2 TX2M_DPB0N
TX1P_DPB1P AD2 TX1P_DPB1P
TX1M_DPB1N AD1 TX1M_DPB1N
TX0P_DPB2P AC3 TX0P_DPB2P
TX0M_DPB2N AC2 TX0M_DPB2N
TXCBP_DPB3P AB2 TXCBP_DPB3P
TXCBM_DPB3N AB1 TXCBM_DPB3N
DDCAUX4P AB4 DDCAUX4P
DDCAUX4N AB5 DDCAUX4N
R1760 1 2 200R 1% DPB_ZVSS V9 DPB_ZVSS
R1761 1 2 200R 1% DPC_ZVSS T9 DPC_ZVSS
R1762 1 2 200R 1% DPD_ZVSS R9 DPD_ZVSS
R1764 1 2 200R 1% DPE_ZVSS P8 DPE_ZVSS
Navi14 Rev0.90
Q1750B 2N7002DW
Q1750A 2N7002DW
R1750 10K
R1751 10K
+3V3_BUS
R1752 2.2K
R1753 2.2K
+5V_VESA
Add GND voids underneath
C1750 1 2 0.1uF 6.3V
C1751 1 2 0.1uF 6.3V
C1752 1 2 0.1uF 6.3V
C1753 1 2 0.1uF 6.3V
C1754 1 2 0.1uF 6.3V
C1755 1 2 0.1uF 6.3V
C1756 1 2 0.1uF 6.3V
C1757 1 2 0.1uF 6.3V
L1780 2 100nH R1770 1 2 499R 1%
L1781 2 100nH R1771 1 2 499R 1%
L1782 2 100nH R1772 1 2 499R 1%
L1783 2 100nH R1773 1 2 499R 1%
L1784 2 100nH R1774 1 2 499R 1%
L1785 2 100nH R1775 1 2 499R 1%
L1786 2 100nH R1776 1 2 499R 1%
L1787 2 100nH R1777 1 2 499R 1%
R1780 1 2 3.3R 1% 12 CTX2P
R1781 1 2 3.3R 1% 12 CTX2N
R1782 1 2 3.3R 1% 12 CTX1P
R1783 1 2 3.3R 1% 12 CTX1N
R1784 1 2 3.3R 1% 12 CTX0P
R1785 1 2 3.3R 1% 12 CTX0N
R1786 1 2 3.3R 1% 12 CTXCP
R1787 1 2 3.3R 1% 12 CTXCN
12 DDC4CLK_HDMI
12 DDC4DAT_HDMI
+12V_BUS_B
R1788 100K
DVI_HDMI_EN
C1778 0.1uF 16V
DPB_GND
Q1753 2N7002L
+3V3_BUS
Q1751 MMBT3904
R1756 1 2 22K HPD_HDMI
R1757 1 2 10K
4 OUT HPD4
J1750
1 TMDS Data 2+
3 TMDS Data 2-
4 TMDS Data 1+
6 TMDS Data 1-
7 TMDS Data 0+
9 TMDS Data 0-
10 TMDS Clock+
12 TMDS Clock-
15 DDC Clock
16 DDC Data
19 Hot Plog Detect
14 NC
13 CEC
+5V Pwr 18
D0 Shld 8
D1 Shld 5
D2 Shld 2
Clk Shld 11
GND (+5V) 17
CASE 20
CASE 21
CASE 22
CASE 23
HDMI_W/TAB
+5V_VESA
C1758 1uF 16V
OPTIONAL ESD PROTECTION DIODES
D1750
12 CTXCN 1
12 CTXCP 2
12 CTX0N 4
12 CTX0P 5
6 CTX0P 12
7 CTX0N 12
9 CTXCP 12
10 CTXCN 12
DNI
ESD8104MUTAG
D1751
12 CTX1N 1
12 CTX1P 2
12 CTX2N 4
12 CTX2P 5
6 CTX2P 12
7 CTX2N 12
9 CTX1P 12
10 CTX1N 12
DNI
ESD8104MUTAG
D1752
12 HPD_HDMI 1
12 DDC4DAT_HDMI 4
12 DDC4CLK_HDMI 5
6 DDC4CLK_HDMI 12
7 DDC4DAT_HDMI 12
9
10 HPD_HDMI 12
ESD8104MUTAG

MSI CONFIDENTIAL
00205363 weistang
PD(C)20191210013(300017789)
劉巍
DMA工程課

MICRO-STAR INT'L CO.,LTD

MS-V382

Size	Document Description	Rev
Custom	NAVI14 - TMDPAB - USB,HDMI	11

Date: Friday, November 22, 2019 Sheet 12 of 28

(13) TMDP D/E

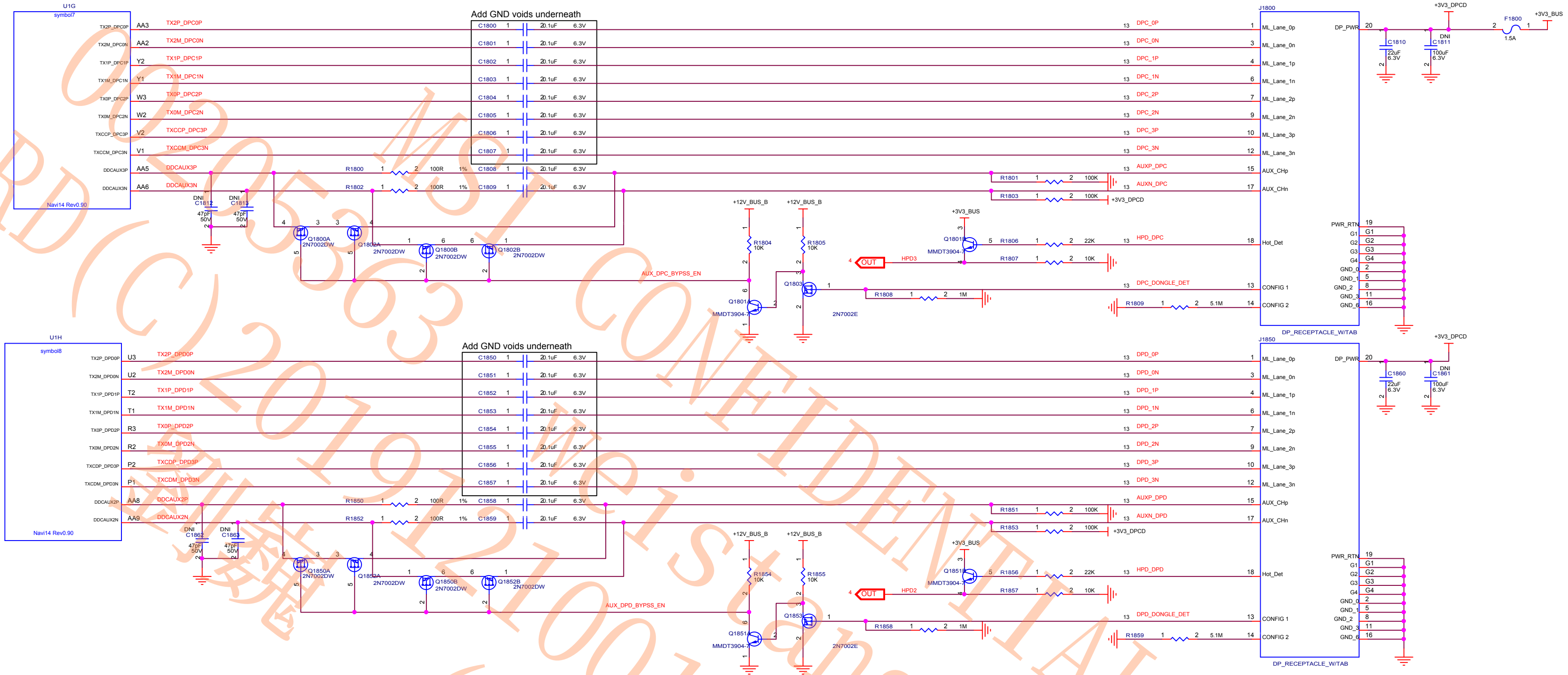

U1G
symbol7
TX2P_DPC0P AA3 TX2P_DPC0P
TX2M_DPC0N AA2 TX2M_DPC0N
TX1P_DPC1P Y2 TX1P_DPC1P
TX1M_DPC1N Y1 TX1M_DPC1N
TX0P_DPC2P W3 TX0P_DPC2P
TX0M_DPC2N W2 TX0M_DPC2N
TXCCP_DPC3P V2 TXCCP_DPC3P
TXCCM_DPC3N V1 TXCCM_DPC3N
DDCAUX3P AA5 DDCAUX3P
DDCAUX3N AA6 DDCAUX3N
Navi14 Rev0.90
Add GND voids underneath
C1800 0.1uF 6.3V
C1801 0.1uF 6.3V
C1802 0.1uF 6.3V
C1803 0.1uF 6.3V
C1804 0.1uF 6.3V
C1805 0.1uF 6.3V
C1806 0.1uF 6.3V
C1807 0.1uF 6.3V
R1800 100R 1% C1808 0.1uF 6.3V
R1802 100R 1% C1809 0.1uF 6.3V
DNI C1812 47pF 50V
DNI C1813 47pF 50V
Q1800A 2N7002DW
Q1802A 2N7002DW
Q1800B 2N7002DW
Q1802B 2N7002DW
AUX_DPC_BYPSS_EN
+12V_BUS_B
R1804 10K
R1805 10K
Q1801A MMDT3904-7
Q1803 2N7002E
R1808 1M
+3V3_BUS
Q1801B MMDT3904-7
OUT HPD3
R1801 100K
R1803 100K +3V3_DPCD
R1806 22K
R1807 10K
R1809 5.1M
DPC_0P
DPC_0N
DPC_1P
DPC_1N
DPC_2P
DPC_2N
DPC_3P
DPC_3N
AUXP_DPC
AUXN_DPC
HPD_DPC
DPC_DONGLE_DET
J1800
ML_Lane_0p
ML_Lane_0n
ML_Lane_1p
ML_Lane_1n
ML_Lane_2p
ML_Lane_2n
ML_Lane_3p
ML_Lane_3n
AUX_CHp
AUX_CHn
Hot_Det
CONFIG 1
CONFIG 2
DP_PWR
PWR_RTN
G1
G2
G3
G4
GND_0
GND_1
GND_2
GND_3
GND_6
DP_RECEPTACLE_W/TAB
+3V3_DPCD
C1810 22uF 6.3V
DNI C1811 100uF 6.3V
F1800 1.5A
+3V3_BUS
U1H
symbol8
TX2P_DPD0P U3 TX2P_DPD0P
TX2M_DPD0N U2 TX2M_DPD0N
TX1P_DPD1P T2 TX1P_DPD1P
TX1M_DPD1N T1 TX1M_DPD1N
TX0P_DPD2P R3 TX0P_DPD2P
TX0M_DPD2N R2 TX0M_DPD2N
TXCDP_DPD3P P2 TXCDP_DPD3P
TXCDM_DPD3N P1 TXCDM_DPD3N
DDCAUX2P AA8 DDCAUX2P
DDCAUX2N AA9 DDCAUX2N
Navi14 Rev0.90
Add GND voids underneath
C1850 0.1uF 6.3V
C1851 0.1uF 6.3V
C1852 0.1uF 6.3V
C1853 0.1uF 6.3V
C1854 0.1uF 6.3V
C1855 0.1uF 6.3V
C1856 0.1uF 6.3V
C1857 0.1uF 6.3V
R1850 100R 1% C1858 0.1uF 6.3V
R1852 100R 1% C1859 0.1uF 6.3V
DNI C1862 47pF 50V
DNI C1863 47pF 50V
Q1850A 2N7002DW
Q1852A 2N7002DW
Q1850B 2N7002DW
Q1852B 2N7002DW
AUX_DPD_BYPSS_EN
R1854 10K
R1855 10K
Q1851A MMDT3904-7
Q1853 2N7002E
R1858 1M
Q1851B MMDT3904-7
OUT HPD2
R1851 100K
R1853 100K +3V3_DPCD
R1856 22K
R1857 10K
R1859 5.1M
DPD_0P
DPD_0N
DPD_1P
DPD_1N
DPD_2P
DPD_2N
DPD_3P
DPD_3N
AUXP_DPD
AUXN_DPD
HPD_DPD
DPD_DONGLE_DET
J1850
C1860 22uF 6.3V
DNI C1861 100uF 6.3V
DP_RECEPTACLE_W/TAB

OPTIONAL ESD PROTECTION DIODES

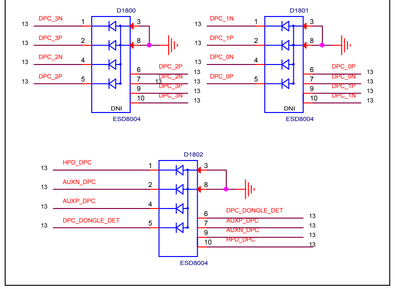

D1800
DPC_3N
DPC_3P
DPC_2N
DPC_2P
DPC_2P
DPC_2N
DPC_3P
DPC_3N
DNI
ESD8004
D1801
DPC_1N
DPC_1P
DPC_0N
DPC_0P
DPC_0P
DPC_0N
DPC_1P
DPC_1N
DNI
ESD8004
D1802
HPD_DPC
AUXN_DPC
AUXP_DPC
DPC_DONGLE_DET
DPC_DONGLE_DET
AUXP_DPC
AUXN_DPC
HPD_DPC
ESD8004

OPTIONAL ESD PROTECTION DIODES

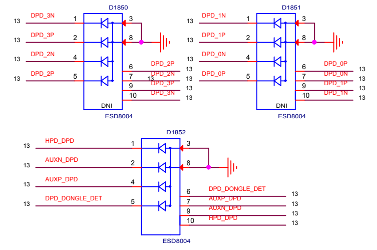

D1850
DPD_3N
DPD_3P
DPD_2N
DPD_2P
DPD_2P
DPD_2N
DPD_3P
DPD_3N
DNI
ESD8004
D1851
DPD_1N
DPD_1P
DPD_0N
DPD_0P
DPD_0P
DPD_0N
DPD_1P
DPD_1N
DNI
ESD8004
D1852
HPD_DPD
AUXN_DPD
AUXP_DPD
DPD_DONGLE_DET
DPD_DONGLE_DET
AUXP_DPD
AUXN_DPD
HPD_DPD
ESD8004

MSI CONFIDENTIAL RD(C)2019121001 weistang(唐浩捷) (30001789) RMA工程課

MICRO-STAR INT'L CO.,LTD

MS-V382

Size	Document Description	Rev
Custom	NAVI14 - TMDPCD - DP,DP	11

Date: Friday, November 22, 2019 Sheet 13 of 28

(14) TMDP C

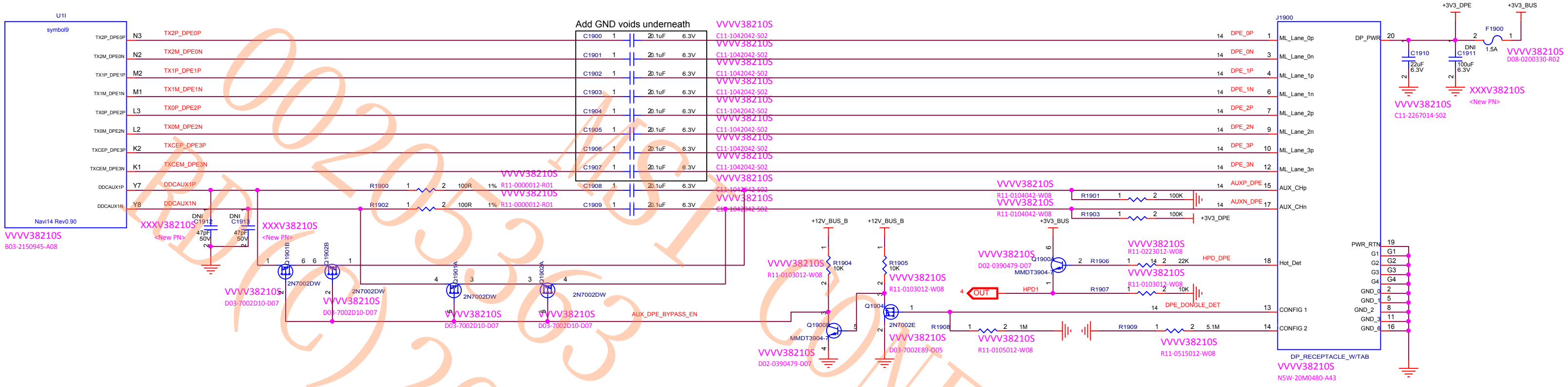
U1I
symbol9
TX2P_DPE0P N3 TX2P_DPE0P
TX2M_DPE0N N2 TX2M_DPE0N
TX1P_DPE1P M2 TX1P_DPE1P
TX1M_DPE1N M1 TX1M_DPE1N
TX0P_DPE2P L3 TX0P_DPE2P
TX0M_DPE2N L2 TX0M_DPE2N
TXCEP_DPE3P K2 TXCEP_DPE3P
TXCEM_DPE3N K1 TXCEM_DPE3N
DDCAUX1P Y7 DDCAUX1P
DDCAUX1N Y8 DDCAUX1N
Navi14 Rev0.90
VVVV38210S
B03-2150945-A08
Add GND voids underneath
C1900 … C1909 0.1uF 6.3V
VVVV38210S
C11-1042042-S02
R1900 100R 1%
R1902 100R 1%
VVVV38210S
R11-0000012-R01
DNI C1912 47pF 50V
DNI C1913 47pF 50V
XXXV38210S
<New PN>
Q1901B Q1902B Q1901A Q1902A
2N7002DW
VVVV38210S
D03-7002D10-D07
AUX_DPE_BYPASS_EN
+12V_BUS_B
R1904 10K
R1905 10K
VVVV38210S
R11-0103012-W08
Q1900B MMDT3904-7
VVVV38210S
D02-0390479-D07
Q1904 2N7002E
VVVV38210S
D03-7002E89-O05
R1908 1M
VVVV38210S
R11-0105012-W08
+3V3_BUS
Q1900A MMDT3904-7
R1906 22K
VVVV38210S
R11-0223012-W08
HPD_DPE
OUT HPD1
R1907 10K
VVVV38210S
R11-0103012-W08
DPE_DONGLE_DET
R1909 5.1M
VVVV38210S
R11-0515012-W08
R1901 100K
R1903 100K
VVVV38210S
R11-0104042-W08
+3V3_DPE
J1900
DPE_0P 1 ML_Lane_0p
DPE_0N 3 ML_Lane_0n
DPE_1P 4 ML_Lane_1p
DPE_1N 6 ML_Lane_1n
DPE_2P 7 ML_Lane_2p
DPE_2N 9 ML_Lane_2n
DPE_3P 10 ML_Lane_3p
DPE_3N 12 ML_Lane_3n
AUXP_DPE 15 AUX_CHp
AUXN_DPE 17 AUX_CHn
18 Hot_Det
13 CONFIG 1
14 CONFIG 2
DP_PWR 20
PWR_RTN 19
G1 G2 G3 G4
GND_0 GND_1 GND_2 GND_3 GND_6
DP_RECEPTACLE_W/TAB
VVVV38210S
N5W-20M0480-A43
+3V3_DPE
+3V3_BUS
F1900 1.5A
VVVV38210S
D08-0200330-R02
C1910 22uF 6.3V
VVVV38210S
C11-2267014-S02
DNI C1911 100uF 6.3V
XXXV38210S
<New PN>

OPTIONAL ESD PROTECTION DIODES

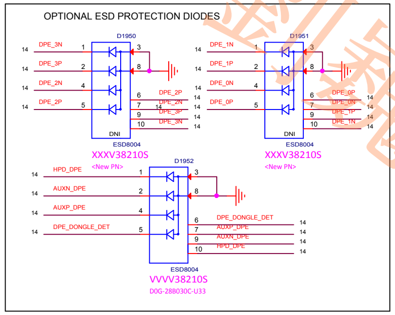
D1950
DPE_3N 1
DPE_3P 2
DPE_2N 4
DPE_2P 5
DPE_2P DPE_2N DPE_3P DPE_3N
DNI
ESD8004
XXXV38210S
<New PN>
D1951
DPE_1N 1
DPE_1P 2
DPE_0N 4
DPE_0P 5
DPE_0P DPE_0N DPE_1P DPE_1N
DNI
ESD8004
XXXV38210S
<New PN>
D1952
HPD_DPE 1
AUXN_DPE 2
AUXP_DPE 4
DPE_DONGLE_DET 5
DPE_DONGLE_DET AUXP_DPE AUXN_DPE HPD_DPE
ESD8004
VVVV38210S
D0G-28B030C-U33

00203363 MSI CONFIDENTIAL
RD(C) 2019121001 (30001789)
劉瑞
weistang(唐浩倢) RMA工程課

MICRO-STAR INT'L CO.,LTD

MS-V382

Size	Document Description	Rev
Custom	NAVI14 - TMDPE - DP	11

Date: Friday, November 22, 2019 | Sheet 14 of 28

REG - VDDGFX/VDDSOC CTRL

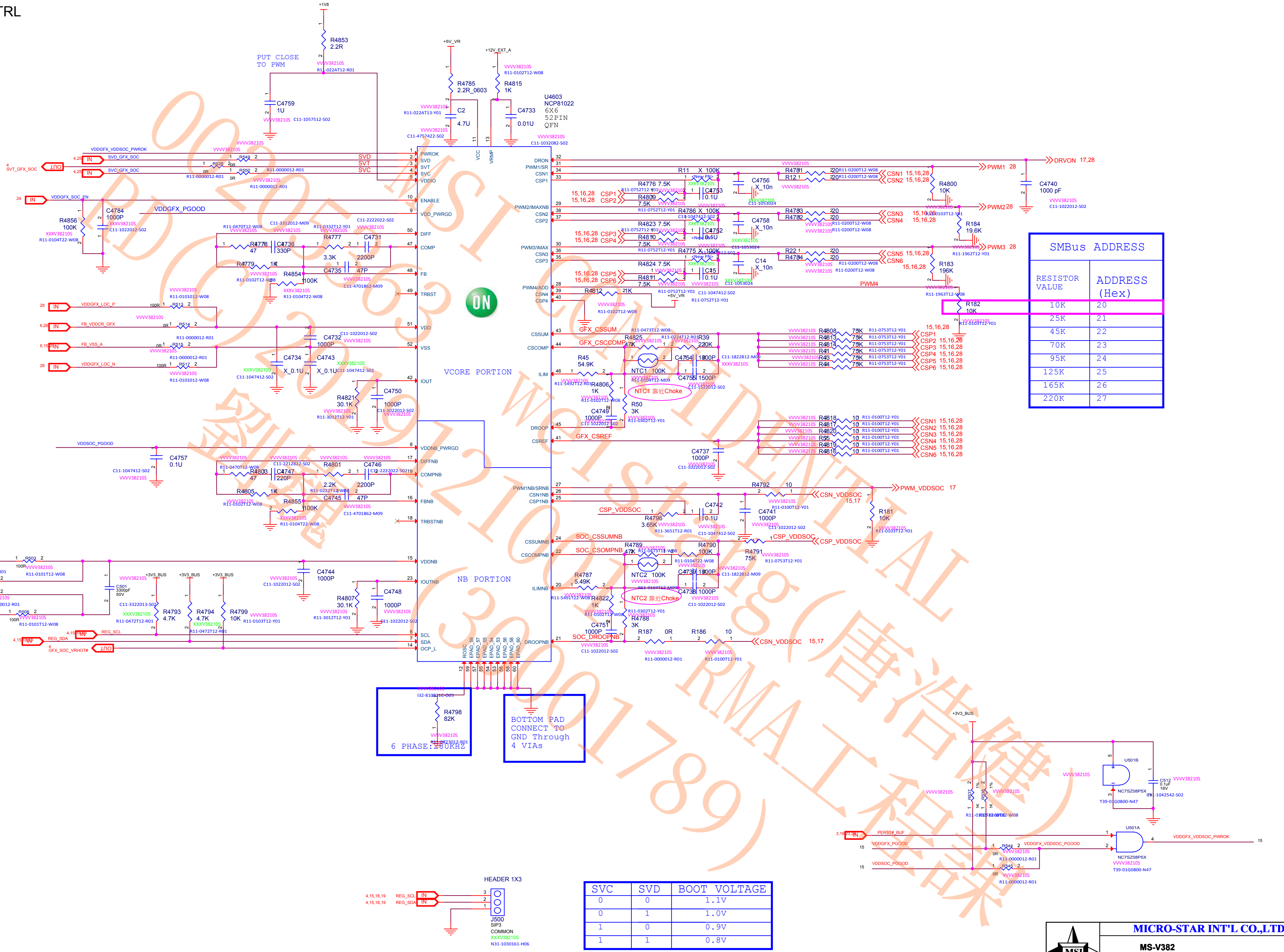

+1V8
R4853
2.2R
PUT CLOSE
TO PWM
C4759
1U
+5V_VR
R4785
2.2R_0603
+12V_EXT_A
R4815
1K
C2
4.7U
C4733
0.01U
U4603
NCP81022
6X6
52PIN
QFN
VDDGFX_VDDSOC_PWROK
SVD_GFX_SOC
SVT_GFX_SOC
SVC_GFX_SOC
R549
R526
R550
SVD
SVT
SVC
VDDGFX_SOC_EN
R4856
100K
C4784
1000P
VDDGFX_PGOOD
PWROK
SVD
SVT
SVC
VDDIO
ENABLE
VDD_PWRGD
DIFF
COMP
FB
TRBST
VDD
VSS
IOUT
VDDNB_PWRGD
DIFFNB
COMPNB
FBNB
TRBSTNB
VDDNB
IOUTNB
SCL
SDA
OCP_L
VCC
VRMP
ROSC
EPAD_59
EPAD_57
EPAD_55
EPAD_54
EPAD_53
EPAD_56
EPAD_58
EPAD_60
DRON
PWM1/SR
CSN1
CSP1
PWM2/IMAXNB
CSN2
CSP2
PWM3/IMAX
CSN3
CSP3
PWM4/ADD
CSN4
CSP4
CSSUM
CSCOMP
ILIM
DROOP
CSREF
PWM1NB/SRNB
CSN1NB
CSP1NB
CSSUMNB
CSCOMPNB
ILIMNB
DROOPNB
VCORE PORTION
NB PORTION
R4778
47
C4736
330P
R4777
3.3K
C4731
2200P
R4779
1K
C4735
47P
R4854
100K
VDDGFX_LOC_P
FB_VDDCR_GFX
FB_VSS_A
VDDGFX_LOC_N
R513
R514
R515
R517
C4732
1000P
C4734
X_0.1U
C4743
X_0.1U
R4821
30.1K
C4750
1000P
VDDSOC_PGOOD
C4757
0.1U
R4803
47
C4747
220P
R4801
2.2K
C4746
2200P
R4805
1K
C4745
47P
R4855
100K
VDDSOC_LOC_P
FB_VDDCR_SOC
FB_VSS_A
VDDSOC_LOC_N
R503
R504
R505
R506
C501
3300pF
50V
+3V3_BUS
R4793
4.7K
R4794
4.7K
R4799
10K
C4744
1000P
R4807
30.1K
C4748
1000P
REG_SCL
REG_SDA
GFX_SOC_VRHOT#
R4798
82K
6 PHASE:280KHZ
BOTTOM PAD
CONNECT TO
GND Through
4 VIAs
R11
X_100K
C4753
0.1U
C4756
X_10n
R4776 7.5K
R4809 7.5K
CSP1
CSP2
R4781
R12
CSN1
CSN2
PWM1
R4800
10K
DRVON
C4740
1000 pF
R4786
X_100K
C4752
0.1U
C4758
X_10n
R4823 7.5K
R4810 7.5K
CSP3
CSP4
R4783
R4782
CSN3
CSN4
PWM2
R184
19.6K
R4775
X_100K
C15
0.1U
C14
X_10n
R4824 7.5K
R4811 7.5K
CSP5
CSP6
R22
R4784
CSN5
CSN6
PWM3
R183
196K
R4812
21K
PWM4
R182
10K
GFX_CSSUM
GFX_CSCCOMP
R4825
47K
R39
220K
R45
54.9K
NTC1 100K
C4754 1800P
C4755 1500P
R4806
1K
R50
3K
C4749
1000P
NTC1 靠近Choke
R4808
R4813
R4814
R41
R43
R44
75K
R4818
R4817
R4820
R55
R4819
R4816
10
GFX_CSREF
C4737
1000P
R4792
10
CSN_VDDSOC
PWM_VDDSOC
R181
10K
CSP_VDDSOC
R4796
3.65K
C4742
0.1U
C4741
1000P
SOC_CSSUMNB
SOC_CSOMPNB
R4789
47K
R4790
100K
R4791
75K
R4787
5.49K
NTC2 100K
C4739 1800P
C4738 1000P
R4822
1K
R4788
3K
C4751
1000P
NTC2 靠近Choke
SOC_DROOPNB
R187
0R
R186
10
U501B
C512
0.1uF
16V
NC7SZ08P5X
R537
R538
1K
1%
PERST#_BUF
VDDGFX_PGOOD
VDDSOC_PGOOD
R544
R545
VDDGFX_VDDSOC_PGOOD
U501A
VDDGFX_VDDSOC_PWROK
HEADER 1X3
J500
SIP3
COMMON

SMBus ADDRESS	
RESISTOR VALUE	ADDRESS (Hex)
10K	20
25K	21
45K	22
70K	23
95K	24
125K	25
165K	26
220K	27

SVC	SVD	BOOT VOLTAGE
0	0	1.1V
0	1	1.0V
1	0	0.9V
1	1	0.8V

MICRO-STAR INT'L CO.,LTD

MS-V382

Size: Custom
Document Description: REG VDDGFX/SOC CONTL
Rev: 11
Date: Friday, November 22, 2019
Sheet 15 of 28

REG - VDDGFX

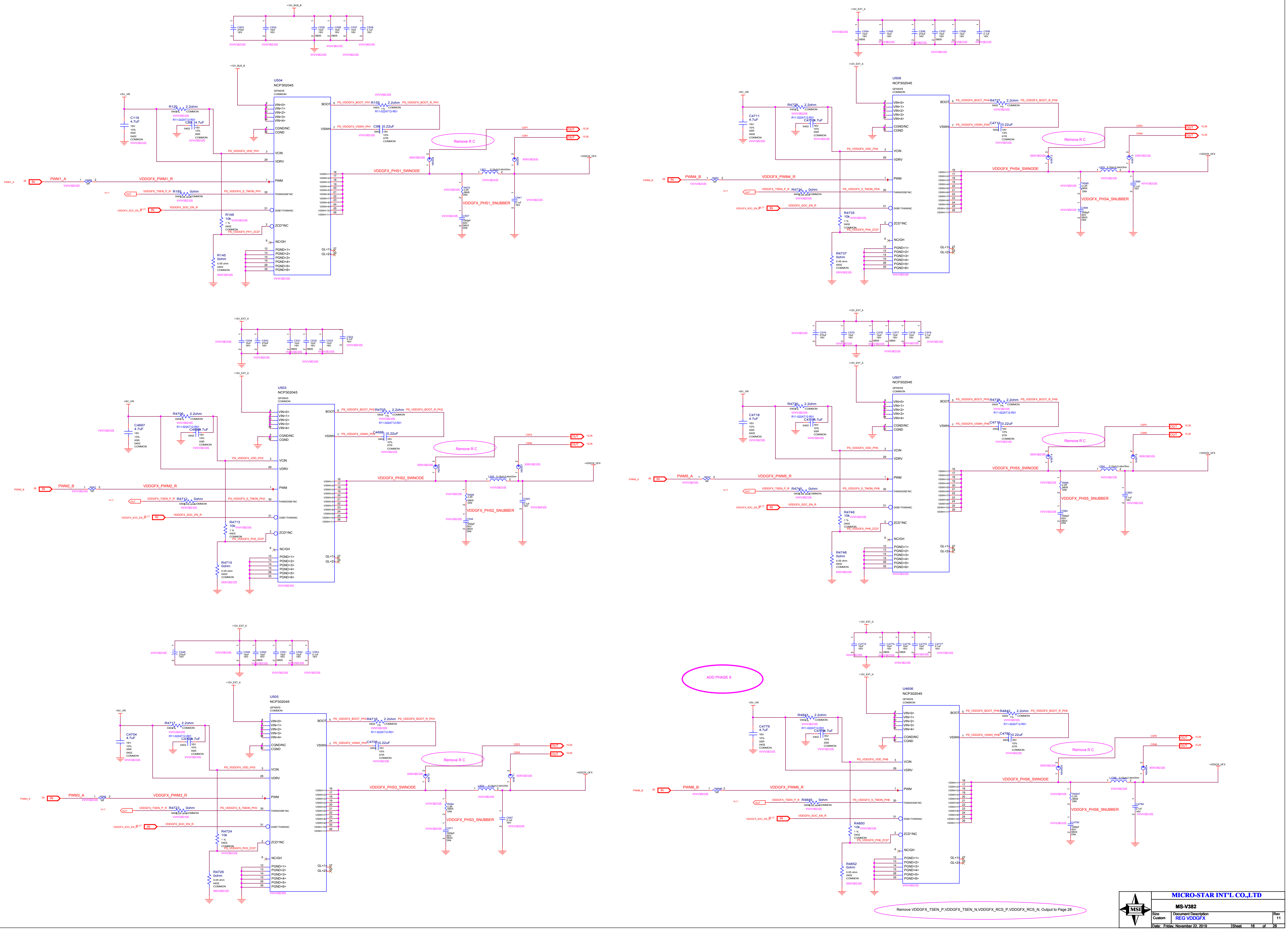

+12V_BUS_B
C523 270uF 16V
C524 10uF 16V
C525 10uF 16V 0805
C526 10uF 16V 0805
C527 10uF 16V
C528 0.1uF 16V
U504
NCP302045
QFN5X5
COMMON
+5V_VR
C119 4.7uF 16V 10% X5R 0402 COMMON
R120 2.2ohm 0402 1% COMMON
R11-022AT12-R01
C89 4.7uF 0402 16V 10% X5R COMMON
VIN<0>
VIN<1>
VIN<2>
VIN<3>
VIN<4>
CGND/NC
CGND
VCIN
VDRV
PWM
THWN/DISB*/NC
DISB*/THWN/NC
ZCD*/NC
NC/GH
PGND<1>
PGND<2>
PGND<3>
PGND<4>
PGND<5>
PGND<6>
BOOT
VSWH
GL<1>
GL<2>
VSWH<1>
VSWH<2>
VSWH<3>
VSWH<4>
VSWH<5>
VSWH<6>
VSWH<7>
VSWH<8>
VSWH<9>
VSWH<10>
VSWH<11>
PS_VDDGFX_BOOT_PH1
R155 2.2ohm 0402 1% COMMON
PS_VDDGFX_BOOT_R_PH1
R11-022AT12-R01
PS_VDDGFX_VSWH_PH1
C96 0.22uF 0402 16V 10% X7R COMMON
PS_VDDGFX_VDD_PH1
PWM1_A
PWM1_A
IN
R568 0R
VDDGFX_PWM1_R
OUT
VDDGFX_TSEN_P_R
R185 0ohm 0402 0.05 ohm COMMON
PS_VDDGFX_S_TMON_PH1
16,17
VDDGFX_SOC_EN_R
R146 10k 1 % 0402 COMMON
PS_VDDGFX_PH1_ZCD*
R145 0ohm 0.05 ohm 0402 COMMON
VDDGFX_PHS1_SWNODE
NS508
NS509
CSP1
CSN1
OUT 15,28
OUT 15,28
L501 0.15uH,0.44mOhm
+VDDCR_GFX
R570 2.2R 0805 DNI
VDDGFX_PHS1_SNUBBER
C547 1000pF 50V 0603 DNI
C541 0.1uF 16V
VVVV38210S
XXXV38210S
+12V_EXT_A
C529 10uF 16V
C530 270uF 16V
C531 10uF 16V 0805
C532 10uF 16V 0805
C533 10uF 16V
C522 0.1uF 16V
U503
NCP302045
C4697 4.7uF 16V 10% X5R 0402 COMMON
R4706 2.2ohm 0402 1% COMMON
C4696 4.7uF 0402 16V 10% X5R COMMON
PS_VDDGFX_BOOT_PH2
R4705 2.2ohm
PS_VDDGFX_BOOT_R_PH2
PS_VDDGFX_VSWH_PH2
C4698 0.22uF
PS_VDDGFX_VDD_PH2
PWM2_B
PWM2_B
R567 0R
VDDGFX_PWM2_R
R4712 0ohm
PS_VDDGFX_S_TMON_PH2
R4713 10k
PS_VDDGFX_PH2_ZCD*
R4715 0ohm
VDDGFX_PHS2_SWNODE
NS506
NS507
CSP2
CSN2
L500 0.15uH,0.44mOhm
R569 2.2R 0805 DNI
VDDGFX_PHS2_SNUBBER
C544 1000pF 50V 0603 DNI
C540 0.1uF 16V
C548 270uF 16V
C549 10uF 16V
C550 10uF 16V 0805
C551 10uF 16V 0805
C552 10uF 16V
C553 0.1uF 16V
U505
NCP302045
C4704 4.7uF
R4717 2.2ohm
C4703 4.7uF
PS_VDDGFX_BOOT_PH3
R4716 2.2ohm
PS_VDDGFX_BOOT_R_PH3
PS_VDDGFX_VSWH_PH3
C4705 0.22uF
PS_VDDGFX_VDD_PH3
PWM3_A
PWM3_A
R586 0R
VDDGFX_PWM3_R
R4723 0ohm
PS_VDDGFX_S_TMON_PH3
R4724 10k
PS_VDDGFX_PH3_ZCD*
R4726 0ohm
VDDGFX_PHS3_SWNODE
NS510
NS511
CSP3
CSN3
L502 0.15uH,0.44mOhm
R584 2.2R 0805 DNI
VDDGFX_PHS3_SNUBBER
C571 1000pF 50V 0603 DNI
C567 0.1uF 16V
C554 10uF 16V 0805
C555 10uF 16V
C556 270uF 16V
C557 10uF 16V 0805
C558 10uF 16V
C559 0.1uF 16V
U506
NCP302045
C4711 4.7uF
R4728 2.2ohm
C4710 4.7uF
PS_VDDGFX_BOOT_PH4
R4727 2.2ohm
PS_VDDGFX_BOOT_R_PH4
PS_VDDGFX_VSWH_PH4
C4712 0.22uF
PS_VDDGFX_VDD_PH4
PWM4_B
PWM4_B
R587 0R
VDDGFX_PWM4_R
R4734 0ohm
PS_VDDGFX_S_TMON_PH4
R4735 10k
PS_VDDGFX_PH4_ZCD*
R4737 0ohm
VDDGFX_PHS4_SWNODE
NS512
NS513
CSP4
CSN4
L503 0.15uH,0.44mOhm
R585 2.2R 0805 DNI
VDDGFX_PHS4_SNUBBER
C568 1000pF 50V 0603 DNI
C566 0.1uF 16V
C574 270uF 16V
C575 10uF 16V
C576 10uF 16V 0805
C577 10uF 16V 0805
C578 10uF 16V
C579 0.1uF 16V
U507
NCP302045
C4718 4.7uF
R4739 2.2ohm
C4717 4.7uF
PS_VDDGFX_BOOT_PH5
R4738 2.2ohm
PS_VDDGFX_BOOT_R_PH5
PS_VDDGFX_VSWH_PH5
C4719 0.22uF
PS_VDDGFX_VDD_PH5
PWM5_A
PWM5_A
R597 0R
VDDGFX_PWM5_R
R4745 0ohm
PS_VDDGFX_S_TMON_PH5
R4746 10k
PS_VDDGFX_PH5_ZCD*
R4748 0ohm
VDDGFX_PHS5_SWNODE
NS514
NS515
CSP5
CSN5
L504 0.15uH,0.44mOhm
R596 2.2R 0805 DNI
VDDGFX_PHS5_SNUBBER
C584 1000pF 50V 0603 DNI
C583 0.1uF 16V
C4772 10uF 16V
C4774 10uF 16V 0805
C4776 10uF 16V 0805
C4775 10uF 16V
C4777 0.1uF 16V
U4606
NCP302045
C4779 4.7uF
R4843 2.2ohm
C4778 4.7uF
PS_VDDGFX_BOOT_PH6
R4842 2.2ohm
PS_VDDGFX_BOOT_R_PH6
PS_VDDGFX_VSWH_PH6
C4780 0.22uF
PS_VDDGFX_VDD_PH6
PWM6_B
PWM6_B
R4846 0R
VDDGFX_PWM6_R
R4849 0ohm
PS_VDDGFX_S_TMON_PH6
R4850 10k
PS_VDDGFX_PH6_ZCD*
R4852 0ohm
VDDGFX_PHS6_SWNODE
NS4605
NS4604
CSP6
CSN6
L1788 0.15uH,0.44mOhm
R4847 2.2R 0805 DNI
VDDGFX_PHS6_SNUBBER
C4783 1000pF 50V 0603 DNI
C4782 0.1uF 16V

Remove R C

Remove R C

Remove R C

Remove R C

Remove R C

Remove R C

ADD PHASE 6

Remove VDDGFX_TSEN_P,VDDGFX_TSEN_N,VDDGFX_RCS_P,VDDGFX_RCS_N, Output to Page 28

MICRO-STAR INT'L CO.,LTD

MS-V382

Size	Document Description	Rev
Custom	REG VDDGFX	11

Date: Friday, November 22, 2019 Sheet 16 of 28

REG: VDDSOC

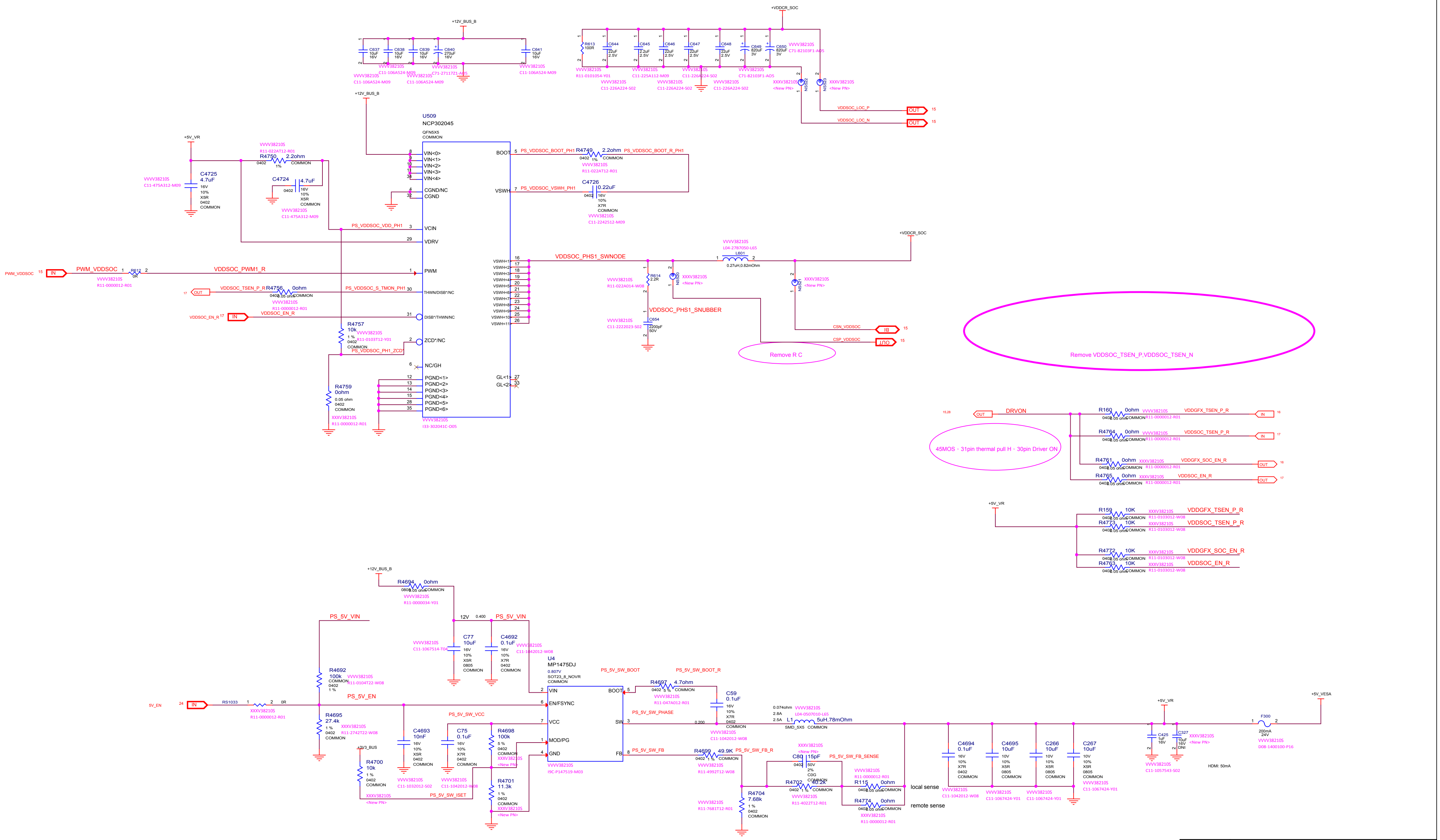
+12V_BUS_B
C637 10uF 16V
C638 10uF 16V
C639 10uF 16V
C640 270uF 16V
C641 10uF 16V
VVVV38210S C11-106A524-M09
VVVV38210S C71-27117Z1-A05
+VDDCR_SOC
R613 100R
C644 22uF 2.5V
C645 2.2uF 2.5V
C646 22uF 2.5V
C647 22uF 2.5V
C648 22uF 2.5V
C649 820uF 3V
C650 820uF 3V
VVVV38210S C71-82103F1-A05
VVVV38210S R11-0101054-Y01
VVVV38210S C11-225A112-M09
VVVV38210S C11-226A224-S02
NS522
NS523
XXXV38210S <New PN>
VDDSOC_LOC_P
VDDSOC_LOC_N
OUT 15
U509
NCP302045
QFN5X5
COMMON
VIN<0>
VIN<1>
VIN<2>
VIN<3>
VIN<4>
CGND/NC
CGND
VCIN
VDRV
PWM
THWN/DISB*/NC
DISB*/THWN/NC
ZCD*/NC
NC/GH
PGND<1>
PGND<2>
PGND<3>
PGND<4>
PGND<5>
PGND<6>
VVVV38210S I33-302041C-O05
BOOT
VSWH
GL<1>
GL<2>
VSWH<1>
VSWH<2>
VSWH<3>
VSWH<4>
VSWH<5>
VSWH<6>
VSWH<7>
VSWH<8>
VSWH<9>
VSWH<10>
VSWH<11>
+5V_VR
C4725 4.7uF 16V 10% X5R 0402 COMMON
VVVV38210S C11-475A312-M09
R4750 2.2ohm 0402 1% COMMON
VVVV38210S R11-022AT12-R01
C4724 4.7uF 0402 16V 10% X5R COMMON
PS_VDDSOC_VDD_PH1
PWM_VDDSOC 15 IN
PWM_VDDSOC
R612 0R
VVVV38210S R11-0000012-R01
VDDSOC_PWM1_R
17 OUT VDDSOC_TSEN_P_R
R4756 0ohm 0402 0.05 ohm COMMON
PS_VDDSOC_S_TMON_PH1
VDDSOC_EN_R 17 IN
VDDSOC_EN_R
R4757 10k 1 % 0402 COMMON
VVVV38210S R11-0103T12-Y01
PS_VDDSOC_PH1_ZCD*
R4759 0ohm 0.05 ohm 0402 COMMON
XXXV38210S R11-0000012-R01
PS_VDDSOC_BOOT_PH1
R4749 2.2ohm 0402 1% COMMON
PS_VDDSOC_BOOT_R_PH1
PS_VDDSOC_VSWH_PH1
C4726 0.22uF 0402 16V 10% X7R COMMON
VVVV38210S C11-2242512-M09
VDDSOC_PHS1_SWNODE
VVVV38210S L04-27B7050-L65
L601 0.27uH,0.82mOhm
R614 2.2R
VVVV38210S R11-022A014-W08
NS520
NS521
VDDSOC_PHS1_SNUBBER
C654 2200pF 50V
VVVV38210S C11-2222023-S02
CSN_VDDSOC
CSP_VDDSOC
BI
Remove R C
Remove VDDSOC_TSEN_P,VDDSOC_TSEN_N
15,28 OUT
DRVON
45MOS，31pin thermal pull H，30pin Driver ON
R160 0ohm
R4764 0ohm
R4761 0ohm
R4765 0ohm
VDDGFX_TSEN_P_R
VDDSOC_TSEN_P_R
VDDGFX_SOC_EN_R
VDDSOC_EN_R
IN 16
IN 17
OUT 16
OUT 17
R159 10K
R4773 10K
R4772 10K
R4763 10K
XXXV38210S R11-0103012-W08
R4694 0ohm 0805 0.05 ohm COMMON
VVVV38210S R11-0000034-Y01
PS_5V_VIN
12V 0.400
C77 10uF 16V 10% X5R 0805 COMMON
VVVV38210S C11-1067514-T04
C4692 0.1uF 16V 10% X7R 0402 COMMON
VVVV38210S C11-1042012-W08
U4
MP1475DJ
0.807V
SOT23_8_NOVR
COMMON
VIN
EN/FSYNC
VCC
MOD/PG
GND
BOOT
SW
FB
VVVV38210S I9C-P147519-M03
R4692 100k COMMON 0402 1 %
VVVV38210S R11-0104T22-W08
5V_EN 24 IN
RS1033 0R
XXXV38210S R11-0000012-R01
PS_5V_EN
R4695 27.4k 1 % 0402 COMMON
XXXV38210S R11-2742T22-W08
+3V3_BUS
R4700 10k 1 % 0402 COMMON
XXXV38210S <New PN>
C4693 10nF 16V 10% X5R 0402 COMMON
VVVV38210S C11-1032012-S02
C75 0.1uF 16V 10% X7R 0402 COMMON
PS_5V_SW_VCC
PS_5V_SW_ISET
R4698 100k 5 % 0402 COMMON
R4701 11.3k 1 % 0402 COMMON
PS_5V_SW_BOOT
PS_5V_SW_BOOT_R
R4697 4.7ohm 0402 5 % COMMON
VVVV38210S R11-047A012-R01
C59 0.1uF 16V 10% X7R 0402 COMMON
PS_5V_SW_PHASE
0.200
0.074ohm 2.8A 2.5A
L1 5uH,78mOhm SMD_5X5 COMMON
VVVV38210S L04-0507010-L65
PS_5V_SW_FB
R4699 49.9K 0402 1 % COMMON
VVVV38210S R11-4992T12-W08
PS_5V_SW_FB_R
R4704 7.68k 1 % 0402 COMMON
VVVV38210S R11-7681T12-R01
C80 15pF 0402 50V 2% C0G COMMON
PS_5V_SW_FB_SENSE
R4702 40.2K 0402 1 % COMMON
VVVV38210S R11-4022T12-R01
R115 0ohm
R4774 0ohm
local sense
remote sense
C4694 0.1uF 16V 10% X7R 0402 COMMON
C4695 10uF 10V 10% X5R 0805 COMMON
C266 10uF 10V 10% X5R 0805 COMMON
C267 10uF 10V 10% X5R 0805 COMMON
VVVV38210S C11-1067424-Y01
C425 1uF 16V
VVVV38210S C11-1057543-S02
C327 10uF 16V DNI
F300 200mA 24V
VVVV38210S D08-1400100-P16
+5V_VESA
HDMI: 50mA

0.8V*(1+40.2K/7.68K)=4.9875V

MICRO-STAR INT'L CO.,LTD

MS-V382

Size	Document Description	Rev
Custom	REG VDDSOC	11

Date: Friday, November 22, 2019 | Sheet 17 of 28

PCC

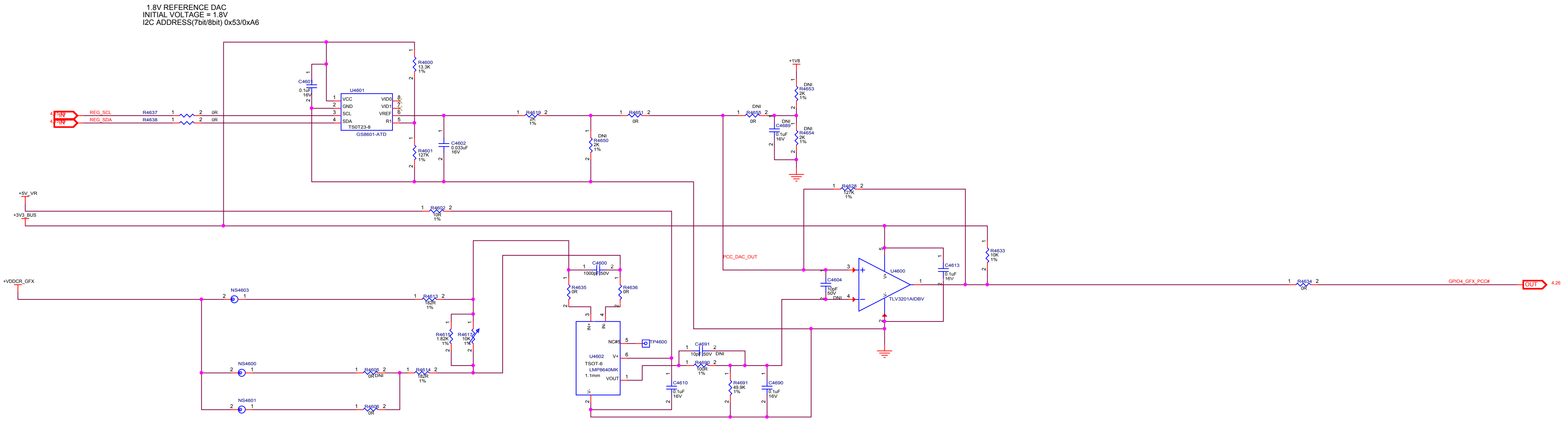
1.8V REFERENCE DAC
INITIAL VOLTAGE = 1.8V
I2C ADDRESS(7bit/8bit) 0x53/0xA6
IN
REG_SCL
REG_SDA
R4637 1 2 0R
R4638 1 2 0R
C4601 0.1uF 16V
U4601
VCC
GND
SCL
SDA
VID0
VID1
VREF
R1
TS0T23-8
GS8601-ATD
R4600 13.3K 1%
R4601 127K 1%
C4602 0.033uF 16V
R4619 2K 1%
R4650 DNI 2K 1%
R4651 0R
R4655 DNI 0R
C4689 DNI 0.1uF 16V
+1V8
R4653 DNI 2K 1%
R4654 DNI 2K 1%
+5V_VR
+3V3_BUS
R4602 10R 1%
R4628 127K 1%
PCC_DAC_OUT
C4604 10pF 50V DNI
U4600
TLV3201AIDBV
C4613 0.1uF 16V
R4633 10K 1%
R4634 0R
GPIO4_GFX_PCC#
OUT
4,26
+VDDCR_GFX
NS4603
NS4600
NS4601
R4613 182R 1%
R4615 1.82K 1%
R4617 10K 1%
R4605 0R DNI
R4606 0R
R4614 182R 1%
C4600 1000pF 50V
R4635 0R
R4636 0R
IN+
IN-
U4602
TSOT-6
LMP8640MK
1.1mm
NC#5
V+
VOUT
V-
TP4600
C4691 10pF 50V DNI
R4690 100R 1%
R4691 49.9K 1%
C4610 0.1uF 16V
C4690 0.1uF 16V

MICRO-STAR INT'L CO.,LTD

MS-V382

Size
Custom

Document Description
REG PCC

Rev
11

Date: Friday, November 22, 2019

Sheet 18 of 28

REG - MVDD/VDDCI CTRL

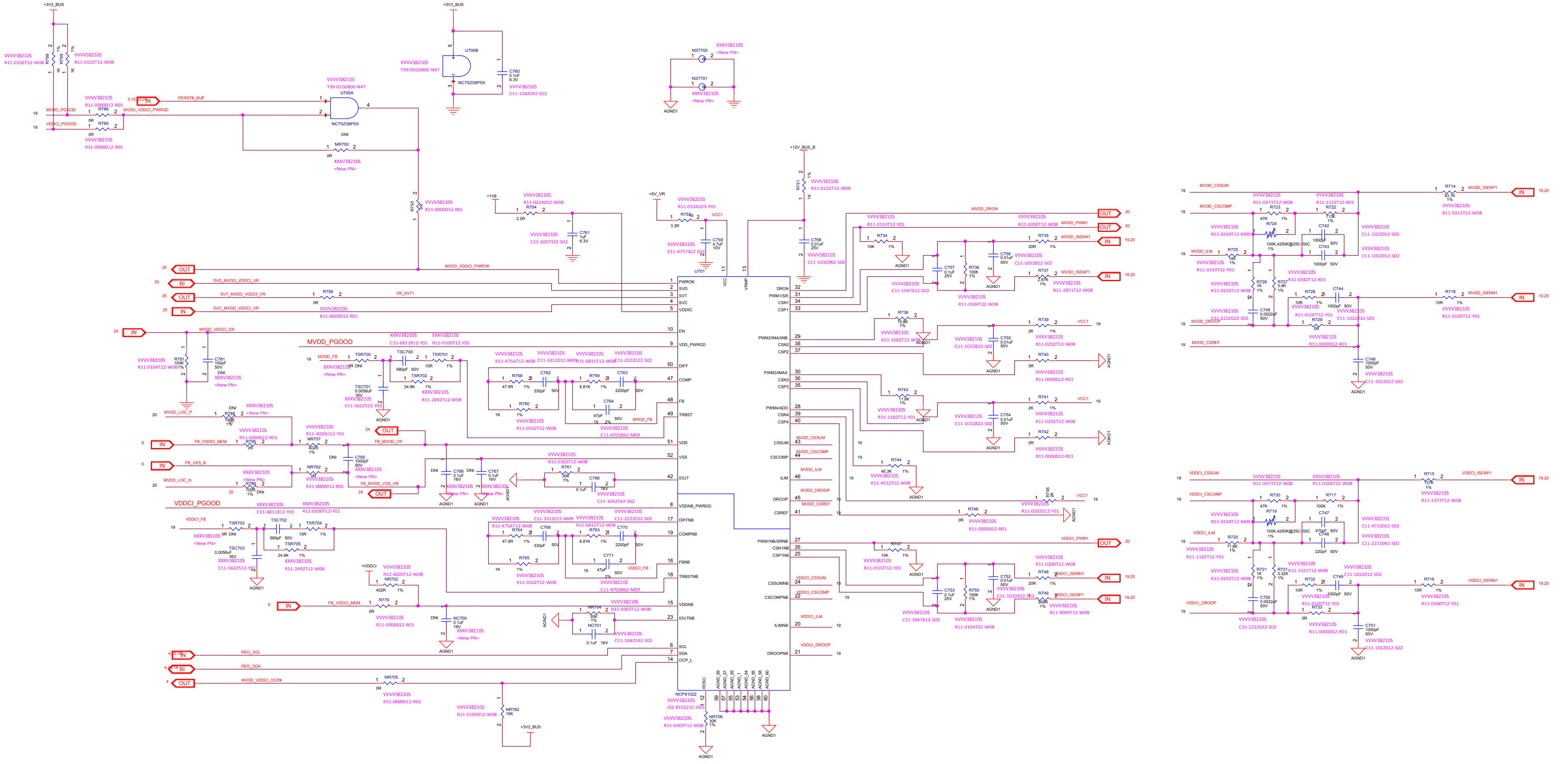

+3V3_BUS
R798 1K 1%
R799 1K 1%
VVVV38210S R11-0102T12-W08
MVDD_PGOOD
VDDCI_PGOOD
R786 0R
R785 0R
VVVV38210S R11-0000012-R01
3,15,23,24 IN
PERST#_BUF
MVDD_VDDCI_PWRGD
U700A NC7SZ08P5X
VVVV38210S T39-01G0800-N47
U700B NC7SZ08P5X
C760 0.1uF 6.3V
VVVV38210S C11-1042042-S02
DNI
MR700 0R
XXXV38210S <New PN>
R755 0R
NST700
NST701
AGND1
+12V_BUS_B
R751 1K 1%
VVVV38210S R11-0102T12-W08
+1V8
R754 2.2R
VVVV38210S R11-022A012-W08
C761 1uF 6.3V
VVVV38210S C11-1057322-S02
+5V_VR
R753 3.3R
VVVV38210S R11-033A023-Y01
VCC1
C759 4.7uF 10V
VVVV38210S C11-4757422-S02
C758 0.01uF 25V
VVVV38210S C11-1032082-S02
U701
NCP81022
VVVV38210S I32-810221C-O05
25 OUT MVDD_VDDCI_PWROK
25 BI SVD_MVDD_VDDCI_VR
25 OUT SVT_MVDD_VDDCI_VR
R756 0R
VR_SVT1
25 IN SVC_MVDD_VDDCI_VR
24 IN MVDD_VDDCI_EN
R781 100K 1%
VVVV38210S R11-0104T22-W08
C781 100pF 50V DNI
XXXV38210S <New PN>
MVDD_PGOOD
XXXV38210S C11-6811812-Y01
XXXV38210S R11-0100T12-Y01
MVDD_FB
TSR700 0R DNI
TSC700 680pF 50V
TSR701 10R 1%
TSR702 24.9K 1%
XXXV38210S R11-2492T12-W08
TSC701 0.0056uF 16V
XXXV38210S C11-5622512-Y01
R758 47.5R 1%
VVVV38210S R11-475AT12-W08
C762 330pF 50V
VVVV38210S C11-3312012-M09
R759 6.81K 1%
VVVV38210S R11-6811T12-W08
C763 2200pF 50V
VVVV38210S C11-2222022-S02
R760 1K 1%
VVVV38210S R11-0102T12-W08
C764 47pF 50V 2%
VVVV38210S C11-4701862-M09
MVDD_LOC_P
R788 100R 1% DNI
6 IN FB_VDDIO_MEM
R795 0R
NR757 402R 1%
VVVV38210S R11-4020U12-Y01
24 OUT FB_MVDD_VR
6 IN FB_VSS_B
NR762 0R
C765 1000pF 50V DNI
MVDD_LOC_N
R789 100R 1% DNI
24 OUT FB_MVDD_VSS_VR
C768 0.1uF 16V DNI
C767 0.1uF 16V DNI
R761 30K 1%
VVVV38210S R11-0303T12-W08
C766 0.1uF 16V
VVVV38210S C11-1042542-S02
VDDCI_PGOOD
VDDCI_FB
TSR703 0R DNI
TSC702 680pF 50V
TSR704 10R 1%
TSR705 24.9K 1%
TSC703 0.0056uF 16V
R764 47.5R 1%
C769 330pF 50V
R763 6.81K 1%
C770 2200pF 50V
R765 1K 1%
C771 47pF 50V 2%
+VDDCI
NR702 402R 1%
VVVV38210S R11-4020T12-W08
6 IN FB_VDDCI_MEM
R779 0R
NC700 0.1uF 16V DNI
NR704 30K 1%
NC701 0.1uF 16V
4,15,18 IN REG_SCL
4,15,18 BI REG_SDA
4 OUT MVDD_VDDCI_OCP#
NR705 0R
NR782 10K
VVVV38210S R11-0103012-W08
NR706 30K 1%
VVVV38210S R11-0303T12-W08
PWROK SVD SVT SVC VDDIO EN VDD_PWRGD DIFF COMP FB TRBST VDD VSS IOUT VDDNB_PWRGD DIFFNB COMPNB FBNB TRBSTNB VDDNB IOUTNB SCL SDA OCP_L
VCC VRMP ROSC AGND_59 AGND_57 AGND_55 AGND_1 AGND_54 AGND_56 AGND_58 AGND_60
DRON PWM1/SR CSN1 CSP1 PWM2/IMAXNB CSN2 CSP2 PWM3/IMAX CSN3 CSP3 PWM4/ADD CSN4 CSP4 CSSUM CSCOMP ILIM DROOP CSREF
PWM1NB/SRNB CSN1NB CSP1NB CSSUMNB CSCOMPNB ILIMNB DROOPNB
MVDD_DRON OUT 20
MVDD_PWM1 OUT 20
R734 10K 1%
VVVV38210S R11-0103T12-Y01
R735 20R 1%
MVDD_ISENN1 IN 19,20
C756 0.01uF 50V
C757 0.1uF 25V
VVVV38210S C11-1047612-S02
R736 100K 1%
VVVV38210S R11-0104T22-W08
R737 2.87K 1%
VVVV38210S R11-2871T12-W08
MVDD_ISENP1 IN 19,20
R738 15.8K 1%
VVVV38210S R11-1582T12-W08
C755 0.01uF 50V
R739 2K 1%
VVVV38210S R11-0202T12-W08
R740 0R
R743 11.8K 1%
VVVV38210S R11-1182T12-Y01
C754 0.01uF 50V
R741 2K 1%
R742 0R
MVDD_CSSUM MVDD_CSCOMP MVDD_ILM MVDD_DROOP MVDD_CSREF
R744 45.3K 1%
VVVV38210S R11-4532T12-W08
R745 2K
VVVV38210S R11-0202012-Y01
R746 0R
VDDCI_PWM1 OUT 20
R747 10K 1%
C752 0.01uF 50V
C753 0.1uF 25V
R750 100K 1%
R748 20R 1%
VVVV38210S R11-0200T12-W08
VDDCI_ISENN1 IN 19,20
R749 909R 1%
VVVV38210S R11-9090T12-W08
VDDCI_ISENP1 IN 19,20
VDDCI_CSSUM VDDCI_CSCOMP VDDCI_ILM VDDCI_DROOP
R714 93.1K 1%
VVVV38210S R11-9312T12-W08
R723 47K 1%
VVVV38210S R11-0473T12-W08
R722 113K 1%
VVVV38210S R11-1133T12-R01
R724 100K,4250K@25C-50C 1%
VVVV38210S R51-0104T12-M09
C742 1000pF 50V
C743 1000pF 50V
VVVV38210S C11-1022012-S02
R725 14K 1%
VVVV38210S R11-0143T12-Y01
R726 1K 1%
R727 3.4K 1%
VVVV38210S R11-0342T12-R01
C745 0.0022uF 50V
VVVV38210S C11-2222022-S02
R728 10R 1%
VVVV38210S R11-0100T12-Y01
C744 1000pF 50V
R729 0R
R718 10R 1%
C746 1000pF 50V
R715 137K 1%
VVVV38210S R11-1373T12-W08
R730 47K 1%
R717 100K 1%
VVVV38210S R11-0104T22-W08
R719 100K,4250K@25C-50C 1%
C747 470pF 50V
VVVV38210S C11-4712012-S02
C748 220pF 50V
VVVV38210S C11-2211042-S02
R720 11.8K 1%
R721 1K 1%
R731 3.32K 1%
VVVV38210S R11-3321T12-W08
R732 10R 1%
C749 1000pF 50V
R733 0R
C750 0.0022uF 50V
R716 10R 1%
C751 1000pF 50V

MICRO-STAR INT'L CO.,LTD

MS-V382

Size: Custom

Document Description: REG VDDCI/MVDD CNTL

Rev: 11

Date: Friday, November 22, 2019

Sheet 19 of 28

REG - MVDD/VDDCI

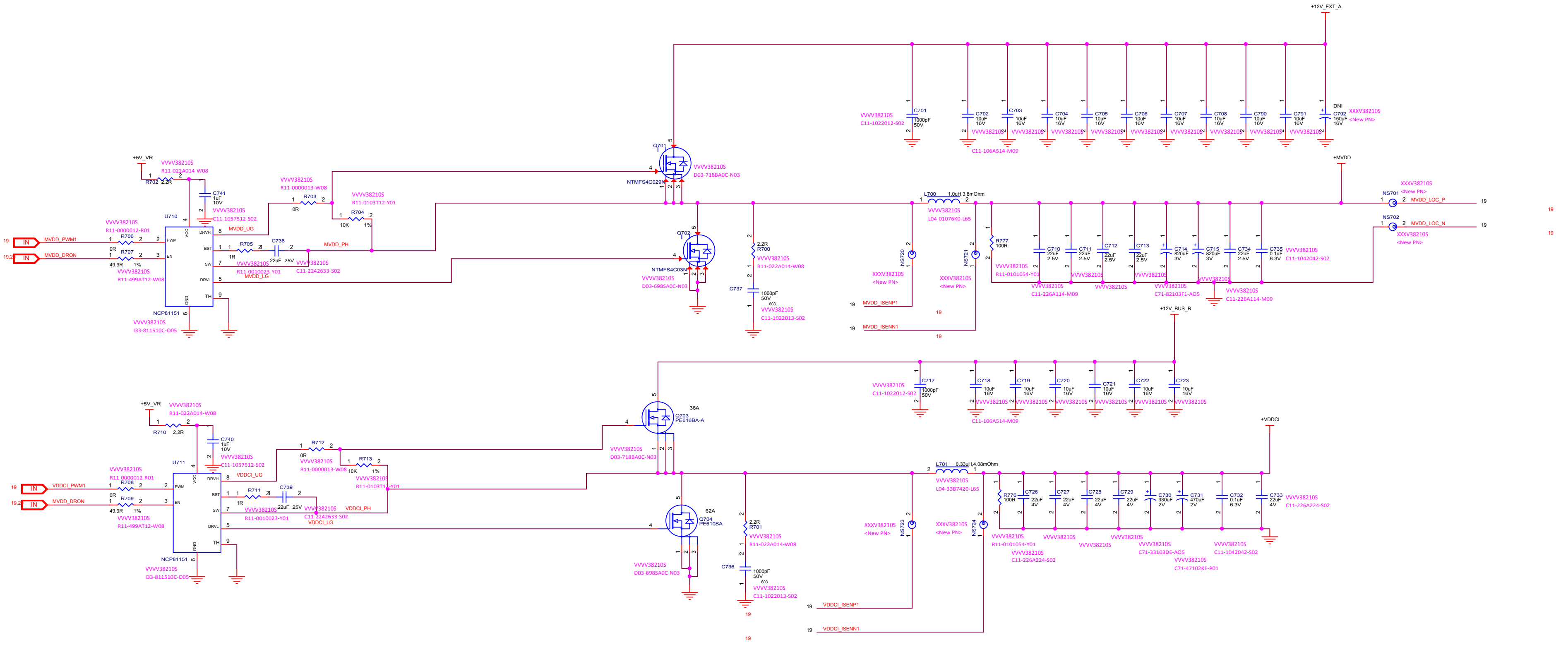
+12V_EXT_A
C701 1000pF 50V VVVV38210S C11-1022012-S02
C702 10uF 16V
C703 10uF 16V
C704 10uF 16V
C705 10uF 16V
C706 10uF 16V
C707 10uF 16V
C708 10uF 16V
C790 10uF 16V
C791 10uF 16V
VVVV38210S
C11-106A514-M09
DNI
C792 150uF 16V XXXV38210S <New PN>
+5V_VR
VVVV38210S R11-022A014-W08
R702 2.2R
C741 1uF 10V
VVVV38210S C11-1057512-S02
VVVV38210S R11-0000013-W08
R703 0R
VVVV38210S R11-0103T12-Y01
R704 10K 1%
U710
NCP81151
VCC DRVH BST SW DRVL TH GND PWM EN
VVVV38210S I33-811510C-O05
19
IN
MVDD_PWM1
19,20
MVDD_DRON
VVVV38210S R11-0000012-R01
R706 0R
R707 49.9R 1%
VVVV38210S R11-499AT12-W08
MVDD_UG
R705 1R
C738 .22uF 25V
VVVV38210S R11-0010023-Y01
VVVV38210S C11-2242633-S02
MVDD_PH
MVDD_LG
Q701
NTMFS4C029N
VVVV38210S D03-718BA0C-N03
Q702
NTMFS4C03N
VVVV38210S D03-698SA0C-N03
2.2R R700
VVVV38210S R11-022A014-W08
C737 1000pF 50V 603
VVVV38210S C11-1022013-S02
L700 1.0uH,3.8mOhm
VVVV38210S L04-01076K0-L65
NS720
NS721
XXXV38210S <New PN>
MVDD_ISENP1
MVDD_ISENN1
R777 100R
VVVV38210S R11-0101054-Y01
C710 22uF 2.5V
C711 22uF 2.5V
C712 22uF 2.5V
C713 22uF 2.5V
C714 820uF 3V
C715 820uF 3V
C734 22uF 2.5V
C735 0.1uF 6.3V
VVVV38210S C11-1042042-S02
VVVV38210S C11-226A114-M09
VVVV38210S C71-82103F1-AO5
+MVDD
NS701
MVDD_LOC_P
NS702
MVDD_LOC_N
XXXV38210S <New PN>
+12V_BUS_B
C717 1000pF 50V
VVVV38210S C11-1022012-S02
C718 10uF 16V
C719 10uF 16V
C720 10uF 16V
C721 10uF 16V
C722 10uF 16V
C723 10uF 16V
C11-106A514-M09
R710 2.2R
C740 1uF 10V
VVVV38210S C11-1057512-S02
U711
NCP81151
VVVV38210S I33-811510C-O05
VDDCI_PWM1
MVDD_DRON
R708 0R
R709 49.9R 1%
VVVV38210S R11-0000012-R01
VVVV38210S R11-499AT12-W08
VDDCI_UG
R712 0R
VVVV38210S R11-0000013-W08
R713 10K 1%
VVVV38210S R11-0103T12-Y01
R711 1R
C739 .22uF 25V
VVVV38210S R11-0010023-Y01
VVVV38210S C11-2242633-S02
VDDCI_PH
VDDCI_LG
36A
Q703 PE616BA-A
VVVV38210S D03-718BA0C-N03
62A
Q704 PE610SA
VVVV38210S D03-698SA0C-N03
2.2R R701
VVVV38210S R11-022A014-W08
C736 1000pF 50V 603
VVVV38210S C11-1022013-S02
L701 0.33uH,4.08mOhm
VVVV38210S L04-33B7420-L65
NS723
NS724
XXXV38210S <New PN>
VDDCI_ISENP1
VDDCI_ISENN1
+VDDCI
R776 100R
VVVV38210S R11-0101054-Y01
C726 22uF 4V
C727 22uF 4V
C728 22uF 4V
C729 22uF 4V
C730 330uF 2V
C731 470uF 2V
C732 0.1uF 6.3V
C733 22uF 4V
VVVV38210S C11-226A224-S02
VVVV38210S C71-33103DE-AO5
VVVV38210S C71-47102KE-P01
VVVV38210S C11-1042042-S02

MICRO-STAR INT'L CO.,LTD

MS-V382

Size	Document Description	Rev
Custom	REG VDDCI/MVDD	11

Date: Friday, November 22, 2019 | Sheet 20 of 28

REG - 0.75V

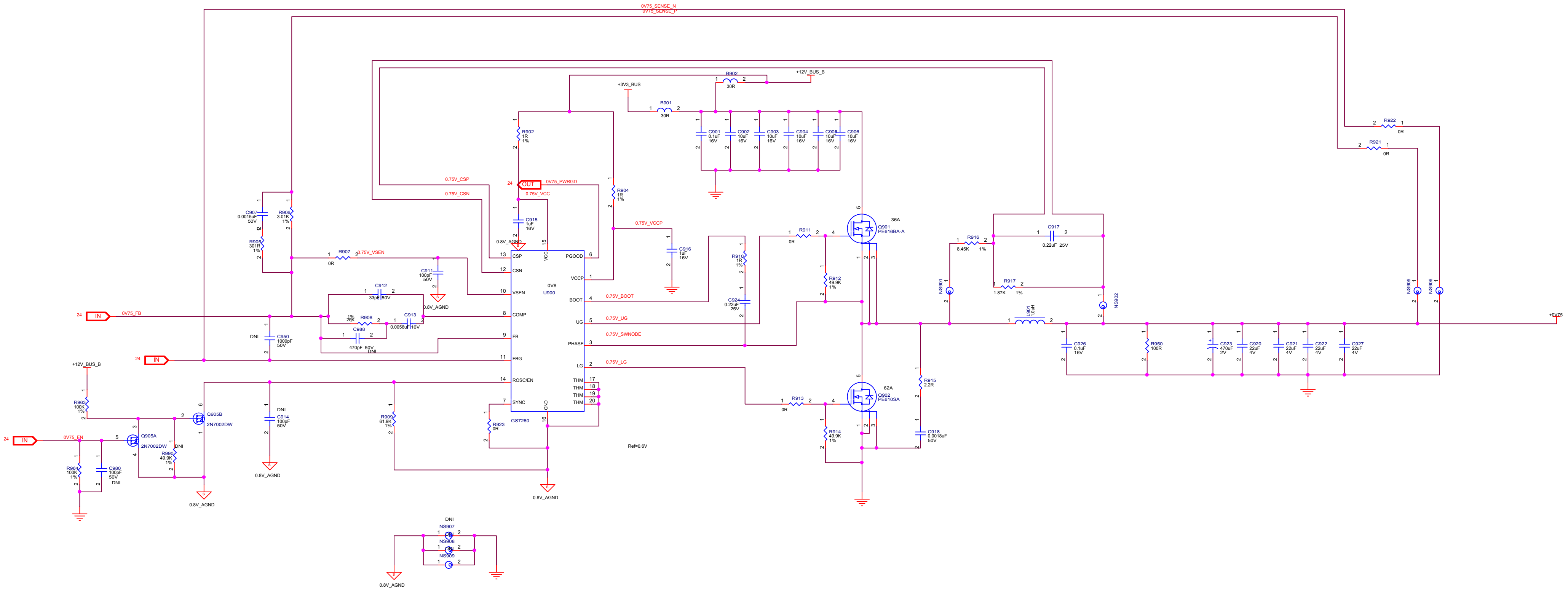
0V75_SENSE_N
0V75_SENSE_P
+3V3_BUS
B901 30R
B902 30R
+12V_BUS_B
C901 0.1uF 16V
C902 10uF 16V
C903 10uF 16V
C904 10uF 16V
C905 10uF 16V
C906 10uF 16V
R902 1R 1%
R904 1R 1%
24 OUT 0V75_PWRGD
0.75V_CSP
0.75V_CSN
0.75V_VCC
C915 1uF 16V
0.8V_AGND
0.75V_VCCP
C916 1uF 16V
C907 0.0015uF 50V
R906 3.01K 1%
R905 301R 1%
R907 0R
0.75V_VSEN
C911 100pF 50V
C912 33pF 50V
R908 20K 1%
C913 0.0056uF 16V
C988 470pF 50V DNI
24 IN 0V75_FB
DNI C950 1000pF 50V
24 IN
U900 0V8 GS7260
CSP CSN VSEN COMP FB FBG ROSC/EN SYNC VCC GND
PGOOD VCCP BOOT UG PHASE LG THM THM THM THM
0.75V_BOOT
0.75V_UG
0.75V_SWNODE
0.75V_LG
R909 61.9K 1%
R923 0R
DNI C914 100pF 50V
Ref=0.6V
+12V_BUS_B
R963 100K 1%
Q905B 2N7002DW
Q905A 2N7002DW
24 IN 0V75_EN
R964 100K 1%
C980 100pF 50V DNI
R990 49.9K 1% DNI
R910 1R 1%
C924 0.22uF 25V
R911 0R
R912 49.9K 1%
Q901 PE616BA-A 36A
R913 0R
R914 49.9K 1%
Q902 PE610SA 62A
R915 2.2R
C918 0.0018uF 50V
R916 8.45K 1%
R917 1.87K 1%
C917 0.22uF 25V
NS901
NS902
L901 1.0uH
C926 0.1uF 16V
R950 100R
C923 470uF 2V
C920 22uF 4V
C921 22uF 4V
C922 22uF 4V
C927 22uF 4V
R922 0R
R921 0R
NS905
NS906
+0V75
DNI
NS907
NS908
NS909
0.8V_AGND

MICRO-STAR INT'L CO.,LTD

MS-V382

Size	Document Description	Rev
Custom	REG - 0V75	11

Date: Friday, November 22, 2019 | Sheet 21 of 28

LDO - 1V8/VPP/5V

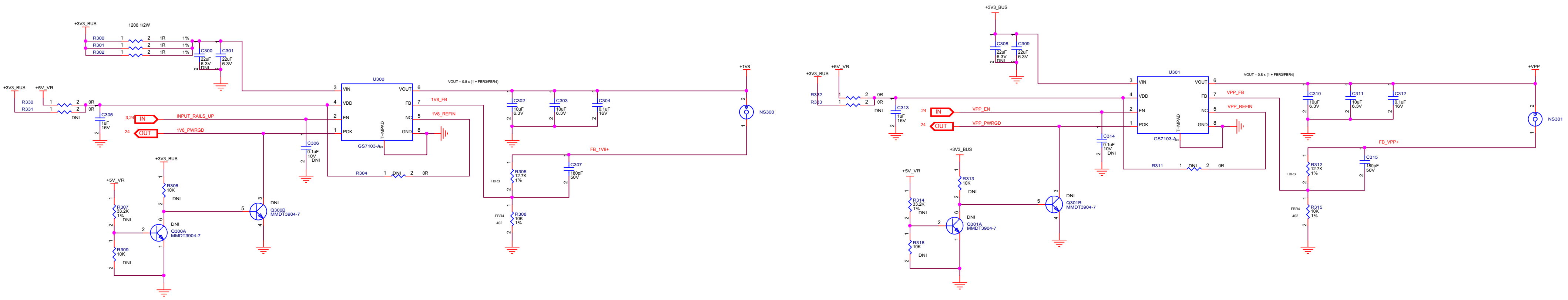
+3V3_BUS
1206 1/2W
R300
R301
R302
1R
1%
C300
C301
22uF
6.3V
DNI
U300
VIN
VDD
EN
POK
VOUT
FB
NC
GND
THMPAD
GS7103-A
VOUT = 0.8 x (1 + FBR3/FBR4)
+1V8
NS300
C302
C303
C304
10uF
0.1uF
16V
1V8_FB
1V8_REFIN
FB_1V8+
+5V_VR
R330
R331
0R
C305
1uF
16V
IN
OUT
INPUT_RAILS_UP
1V8_PWRGD
C306
0.1uF
10V
R304
C307
180pF
50V
R305
12.7K
FBR3
FBR4
402
R308
10K
R306
R307
33.2K
R309
Q300A
Q300B
MMDT3904-7
U301
+VPP
NS301
R332
R333
C308
C309
C310
C311
C312
C313
C314
C315
VPP_EN
VPP_PWRGD
VPP_FB
VPP_REFIN
FB_VPP+
R311
R312
R313
R314
R315
R316
Q301A
Q301B

MICRO-STAR INT'L CO.,LTD

MS-V382

Size	Document Description	Rev
Custom	LDO 1V8/VPP/5V/5V_VESA	11

Date: Friday, November 22, 2019 Sheet 22 of 28

(27) MECH AND THERM MANAGEMENT

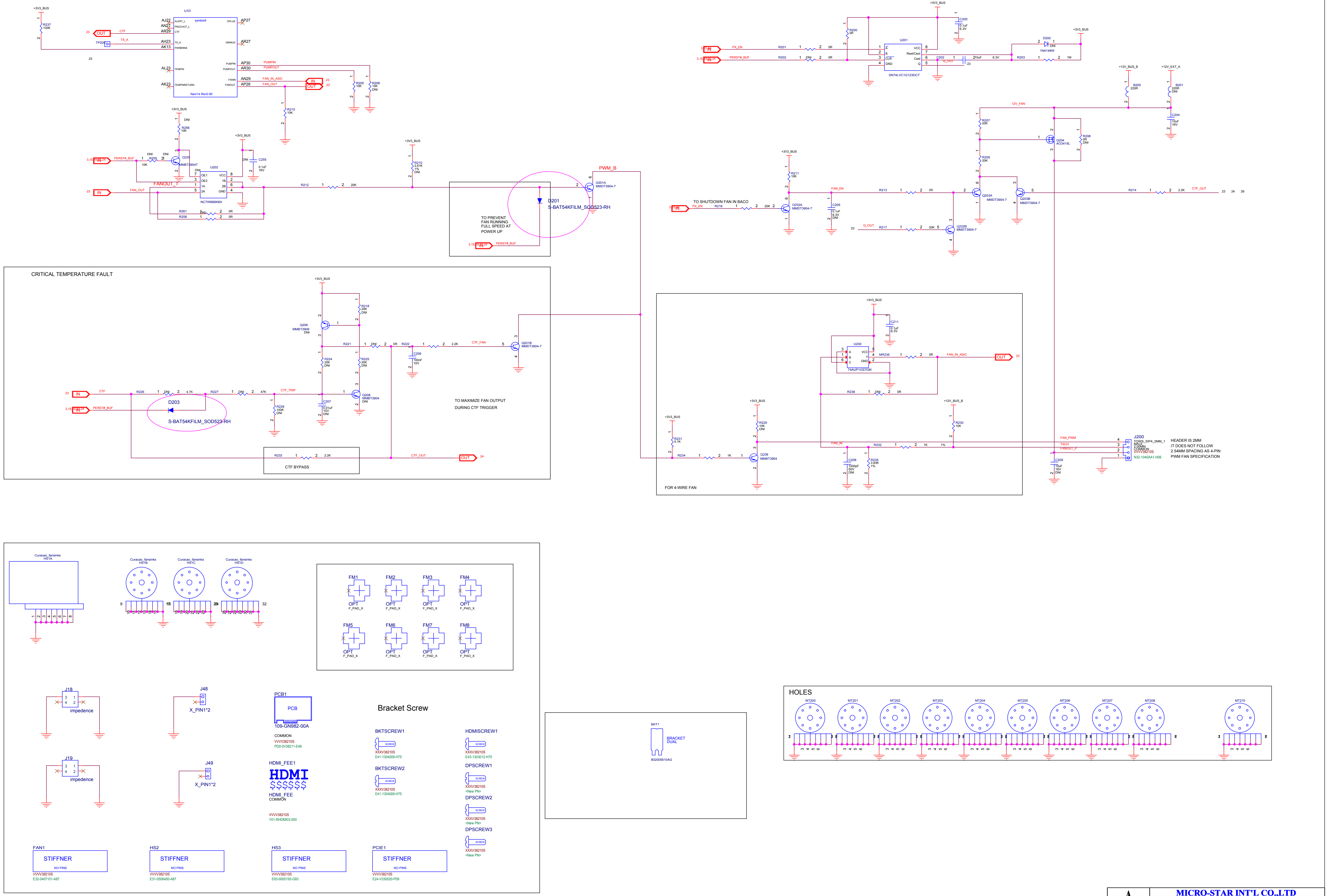
U1D
symbol4
Navi14 Rev0.90
+3V3_BUS
R237 100K
CTF
TS_A
TP200
AJ22 ALERT_L
AN27 PROCHOT_L
AR29 CTF
AH23 TS_A
AK13 PWRBRKB
AL23 TEMPIN
AK23 TEMPINRETURN
AP27 DPLUS
AR27 DMINUS
AP30 PUMPIN
AR30 PUMPOUT
AN29 FANIN
AP29 FANOUT
PUMPIN
PUMPOUT
FAN_IN_ASIC
FAN_OUT
R205 10K
R206 10K DNI
R215 10K
R256 10K
DNI
Q220 MMBT3904T
PERST#_BUF
R255 10K
U202
NC7WB66K8X
OE1
OE2
1A
2A
VCC
1B
2B
GND
FANOUT_P
FAN_OUT
C255 0.1uF 16V DNI
R261 0R DNI
R258 0R
R212 20K
R210 2.61K 1% DNI
PWM_B
Q201A MMDT3904-7
D201 S-BAT54KFILM_SOD523-RH
TO PREVENT FAN RUNNING FULL SPEED AT POWER UP
CRITICAL TEMPERATURE FAULT
Q206 MMBT3906 DNI
R218 20K DNI
R221 0R DNI
R222 2.2K
CTF_FAN
Q201B MMDT3904-7
C206 100nF 10V
R224 20K DNI
R225 20K DNI
Q208 MMBT3904 DNI
R226 4.7K DNI
R227 47K DNI
CTF_TRIP
D203 S-BAT54KFILM_SOD523-RH
R228 100K DNI
C207 0.01uF 10V DNI
TO MAXIMIZE FAN OUTPUT DURING CTF TRIGGER
R233 2.2K
CTF BYPASS
CTF_OUT
IN
OUT
U201
SN74LVC1G123DCT
A
B
CLR
GND
VCC
Rext/Cext
Cext
Q
PX_EN
R201 0R
R202 0R DNI
R200 0R
C200 0.1uF 6.3V
C202 10uF 6.3V
Q_OUT
D200 1N4148W DNI
R203 1M
+12V_BUS_B
+12V_EXT_A
R200 220R
R201 220R DNI
C204 10uF 16V
12V_FAN
R207 20K
Q204 AO3415L
R208 0R DNI
R209 20K
R211 10K
FAN_EN
R213 0R
Q203A MMDT3904-7
Q203B MMDT3904-7
R214 2.2K
CTF_OUT
TO SHUTDOWN FAN IN BACO
R216 20K
Q202A MMDT3904-7
C205 0.1uF 6.3V DNI
R217 20K
Q202B MMDT3904-7
U200
74AUP1G57GM
C211 0.1uF 6.3V
R236 0R
FAN_IN_ASIC
R236 0R DNI
+12V_BUS_B
R229 10K DNI
R230 10K
R231 5.1K
R234 1K
Q209 MMBT3904
FAN_IN
R232 1K 1%
C208 1000pF 50V DNI
R235 3.83K 1%
FAN_PWM
TACH
FANOUT_P
C209 10uF 16V DNI
J200 TDW0_SIP4_2MM_1 MALE 2.00MM COMMON VVVV38210S N32-1040AA1-H06
HEADER IS 2MM IT DOES NOT FOLLOW 2.54MM SPACING AS 4-PIN PWM FAN SPECIFICATION
FOR 4-WIRE FAN
Curacao_fansinks HS1A
Curacao_fansinks HS1B
Curacao_fansinks HS1C
Curacao_fansinks HS1D
FM1
FM2
FM3
FM4
FM5
FM6
FM7
FM8
OPT F_PAD_X
J18 impedence
J19 impedence
J48 X_PIN1*2
J49 X_PIN1*2
PCB1 PCB 109-GN982-00A COMMON VVVV38210S P00-0V38211-E48
HDMI_FEE1 HDMI $$$$$$ HDMI_FEE COMMON VVVV38210S Y01-RHDMI003-000
Bracket Screw
BKTSCREW1 SCREW XXXV38210S E41-1304009-H75
BKTSCREW2 SCREW XXXV38210S E41-1304009-H75
HDMISCREW1 SCREW XXXV38210S E43-1303012-H75
DPSCREW1 SCREW XXXV38210S <New PN>
DPSCREW2 SCREW XXXV38210S <New PN>
DPSCREW3 SCREW XXXV38210S <New PN>
BKT1 BRACKET DUAL 802005610AG
FAN1 STIFFNER NO PINS VVVV38210S E32-0407101-A87
HS2 STIFFNER NO PINS VVVV38210S E31-0506450-A87
HS3 STIFFNER NO PINS VVVV38210S E93-0000193-G93
PCIE1 STIFFNER NO PINS VVVV38210S E24-V330020-P09
HOLES
MT200
MT201
MT202
MT203
MT204
MT205
MT206
MT207
MT208
MT210

MICRO-STAR INT'L CO.,LTD

MS-V382

Size	Document Description	Rev
Custom	MECHANICAL AND THERMAL	11

Date: Friday, November 22, 2019 Sheet 23 of 28

(27) POWER MANAGEMENT

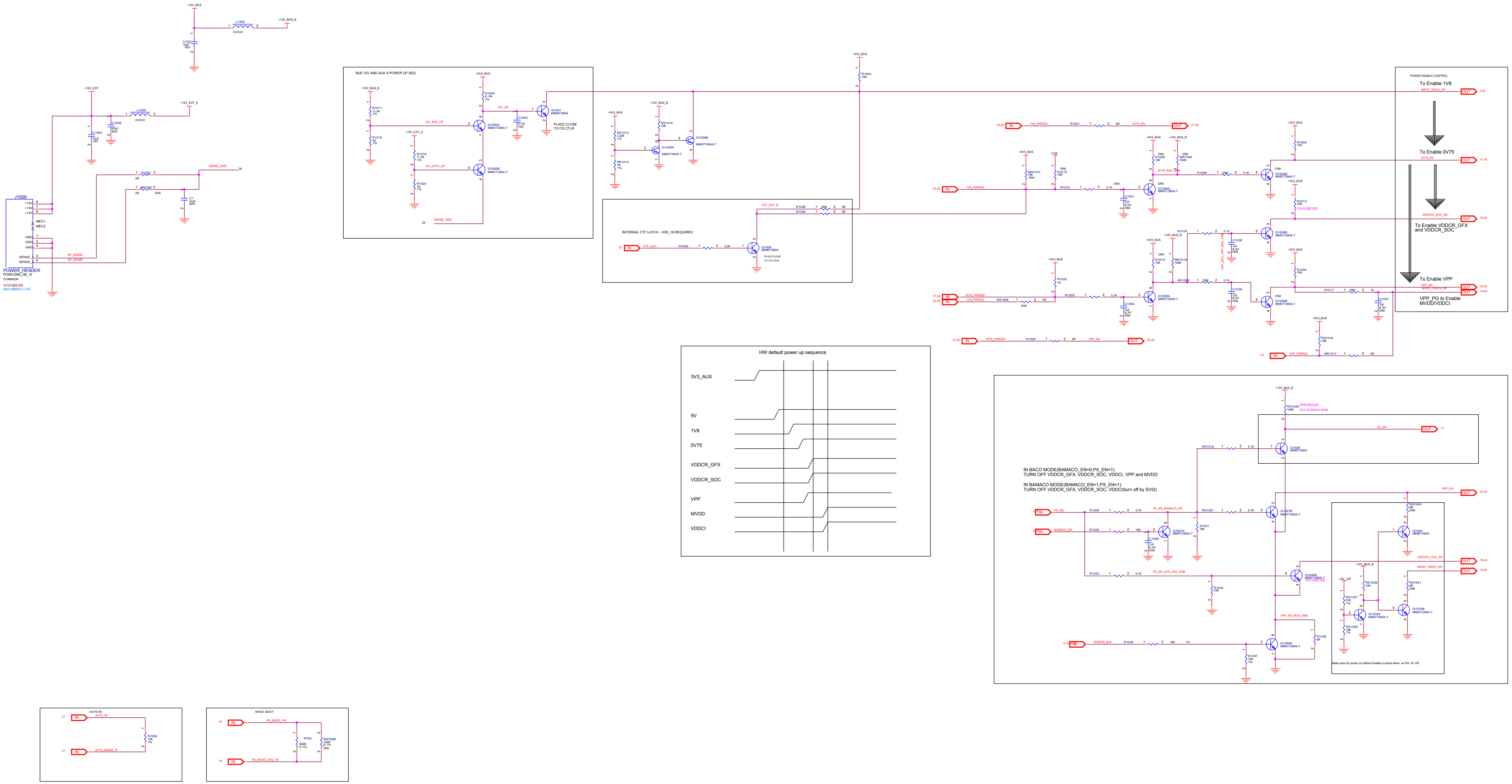
+12V_BUS
L1002
0.47uH
+12V_BUS_B
+12V_EXT
L1000
0.47uH
+12V_EXT_A
C1002
47uF
50V
C1003
10uF
16V
J1000
POWER_HEADER
POWCONN_DE_10
COMMON
VVVV38210S
N53-0B46S11-C87
+12V
MEC1
MEC2
GND
SENSE
SENSE_GND
R1050
R1051
0R
DNI
BUS 12V AND AUX A POWER UP SEQ
+3V3_BUS
+12V_BUS_B
R1009
5.11K
1%
R1011
11.3K
1%
R1015
1K
1%
12V_BUS_UP
12V_UP
Q1000A
MMDT3904-7
C1000
0.1uF
16V
Q1001
MMBT3904
PLACE CLOSE
TO ITS CTLR
+12V_EXT_A
R1018
11.3K
1%
R1020
1K
1%
12V_EXTA_UP
Q1000B
MMDT3904-7
24
SENSE_GND
RS1012
2.32K
1%
RS1013
1K
1%
RS1014
10K
Q1028A
MMDT3904-7
Q1028B
MMDT3904-7
R1004
10K
INTERNAL CTF LATCH - VDD_18 REQUIRED
23
IN
CTF_OUT
R1040
2.2K
Q1009
MMBT3904
CTF_OUT_B
R1038
DNI
0R
R1039
0R
POWER ENABLE CONTROL
To Enable 1V8
INPUT_RAILS_UP
OUT
3,22
To Enable 0V75
0V75_EN
21,24
VDDGFX_SOC_EN
15,24
To Enable VDDCR_GFX and VDDCR_SOC
To Enable VPP
VPP_EN
22,24
MVDD_VDDCI_EN
19,24
VPP_PG to Enable MVDD/VDDCI
1V8_PWRGD
RS1021
0V75_EN
Q1004A
Q1004B
Q1005A
Q1005B
Q1006B
MMDT3904-7
C1001
C1004
C1036
C1037
C1039
1uF
6.3V
DNI
0V75_PWRGD
VPP_PWRGD
HW default power up sequence
3V3_AUX
5V
1V8
0V75
VDDCR_GFX
VDDCR_SOC
VPP
MVDD
VDDCI
+12V_BUS_B
RS1026
100K
5V_EN
OUT
Q1029
MMBT3904
RS1018
5.1K
PX_EN
R1029
5.1K
PX_EN_BAMACO_EN
RS1021
R1031
10K
BAMACO_EN
R1030
10K
Q1007A
MMDT3904-7
C1006
1uF
6.3V
DNI
Q1007B
MMDT3904-7
VPP_EN
R1033
5.1K
PX_EN_GFX_SOC_EN
R1034
10K
Q1008B
MMDT3904-7
VVVV38210S
VPP_EN_MOS_GND
PERST#_BUF
R1035
10K
1%
Q1008A
MMDT3904-7
R1036
0R
R1037
10K
1%
RS1040
0R
DNI
Q1034
MMBT3904
VDDGFX_SOC_EN
MVDD_VDDCI_EN
+5V_VR
RS1037
51K
1%
RS1038
10K
1%
RS1039
10K
Q1033A
MMDT3904-7
RS1041
0R
DNI
Q1033B
MMDT3904-7
+0V75 FB
21
0V75_FB
0V75_SENSE_N
R1050
12K
1%
MVDD BOOT
19
FB_MVDD_VR
FB_MVDD_VSS_VR
R762
806R
0.1%
RN700B
100R
0.1%
DNI

IN BACO MODE(BAMACO_EN=0,PX_EN=1)
TURN OFF VDDCR_GFX, VDDCR_SOC, VDDCI, VPP and MVDD

IN BAMACO MODE(BAMACO_EN=1,PX_EN=1)
TURN OFF VDDCR_GFX, VDDCR_SOC, VDDCI(turn off by SVI2)

Make sure 5V power on before Enable is active when w/ EN 5V VR

MICRO-STAR INT'L CO.,LTD

MS-V382

Size	Document Description	Rev
Custom	POWER MANAGEMENT	11

Date: Friday, November 22, 2019 | Sheet 24 of 28

(28) SVI2

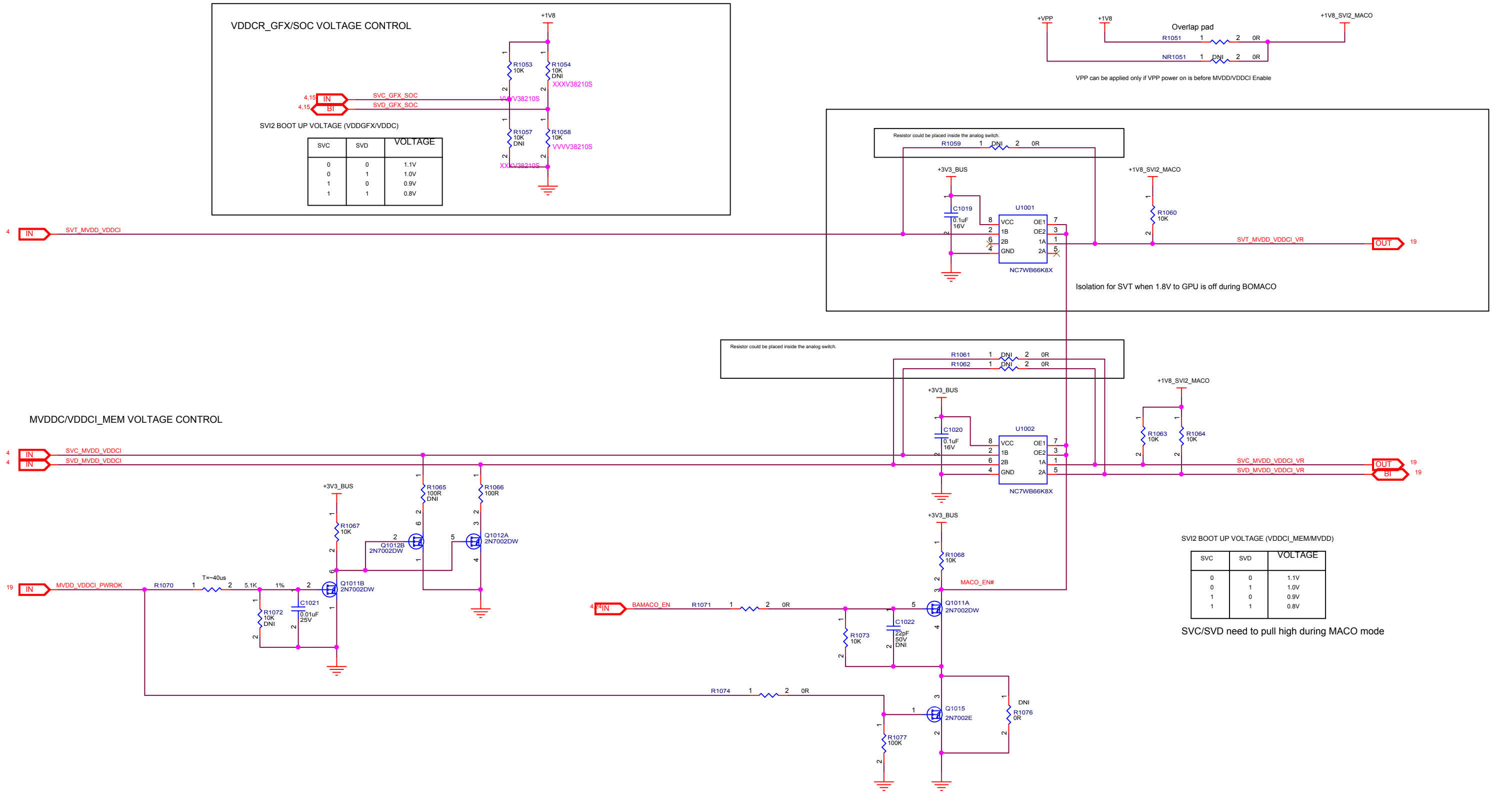
VDDCR_GFX/SOC VOLTAGE CONTROL
+1V8
R1053
10K
R1054
10K
DNI
XXXV38210S
VVVV38210S
R1057
10K
DNI
XXXV38210S
R1058
10K
VVVV38210S
4,15 IN SVC_GFX_SOC
4,15 BI SVD_GFX_SOC
+VPP
+1V8
+1V8_SVI2_MACO
Overlap pad
R1051 1 2 0R
NR1051 1 DNI 2 0R
4 IN SVT_MVDD_VDDCI
Resistor could be placed inside the analog switch.
R1059 1 DNI 2 0R
+3V3_BUS
C1019
0.1uF
16V
U1001
VCC
1B
2B
GND
OE1
OE2
1A
2A
NC7WB66K8X
+1V8_SVI2_MACO
R1060
10K
SVT_MVDD_VDDCI_VR
OUT 19
Resistor could be placed inside the analog switch.
R1061 1 DNI 2 0R
R1062 1 DNI 2 0R
+3V3_BUS
C1020
0.1uF
16V
U1002
VCC
1B
2B
GND
OE1
OE2
1A
2A
NC7WB66K8X
+1V8_SVI2_MACO
R1063
10K
R1064
10K
SVC_MVDD_VDDCI_VR
SVD_MVDD_VDDCI_VR
OUT 19
BI 19
MVDDC/VDDCI_MEM VOLTAGE CONTROL
4 IN SVC_MVDD_VDDCI
4 IN SVD_MVDD_VDDCI
R1065
100R
DNI
R1066
100R
+3V3_BUS
R1067
10K
Q1012B
2N7002DW
Q1012A
2N7002DW
19 IN MVDD_VDDCI_PWROK
R1070 1 2 5.1K 1%
T=~40us
R1072
10K
DNI
C1021
0.01uF
25V
Q1011B
2N7002DW
+3V3_BUS
R1068
10K
MACO_EN#
4,24 IN BAMACO_EN
R1071 1 2 0R
R1073
10K
C1022
22pF
50V
DNI
Q1011A
2N7002DW
R1074 1 2 0R
R1077
100K
Q1015
2N7002E
DNI
R1076
0R

VDDCR_GFX/SOC VOLTAGE CONTROL

VPP can be applied only if VPP power on is before MVDD/VDDCI Enable

Isolation for SVT when 1.8V to GPU is off during BOMACO

SVI2 BOOT UP VOLTAGE (VDDGFX/VDDC)

SVC	SVD	VOLTAGE
0	0	1.1V
0	1	1.0V
1	0	0.9V
1	1	0.8V

MVDDC/VDDCI_MEM VOLTAGE CONTROL

SVI2 BOOT UP VOLTAGE (VDDCI_MEM/MVDD)

SVC	SVD	VOLTAGE
0	0	1.1V
0	1	1.0V
1	0	0.9V
1	1	0.8V

SVC/SVD need to pull high during MACO mode

MICRO-STAR INT'L CO.,LTD

MS-V382

Size Custom
Document Description SVI2
Rev 11
Date: Friday, November 22, 2019
Sheet 25 of 28

(29) DEBUG CIRCUIT

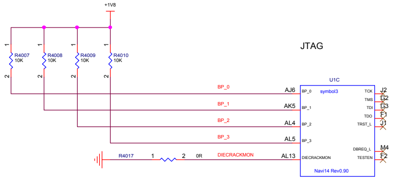
JTAG
+1V8
R4007
10K
R4008
10K
R4009
10K
R4010
10K
1
2
BP_0
BP_1
BP_2
BP_3
DIECRACKMON
R4017
1
2
0R
AJ6
AK5
AL4
AL5
AL13
U1C
symbol3
BP_0
BP_1
BP_2
BP_3
DIECRACKMON
TCK
TMS
TDI
TDO
TRST_L
DBREQ_L
TESTEN
J2
G2
G3
F1
J1
M4
F2
Navi14 Rev0.90

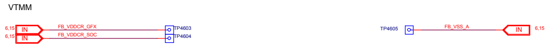
VTMM
6,15
IN
FB_VDDCR_GFX
6,15
IN
FB_VDDCR_SOC
TP4603
TP4604
TP4605
FB_VSS_A
IN
6,15

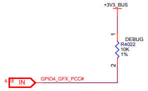
+3V3_BUS
1
DEBUG
R4022
10K
1%
2
4,18
IN
GPIO4_GFX_PCC#

MICRO-STAR INT'L CO.,LTD

MS-V382

Size	Document Description	Rev
Custom	DEBUG CIRCUITS	11

Date: Friday, November 22, 2019 | Sheet 26 of 28

REVISION HISTORY

1.00	00A	08/09/2018	Initial schematic	
		12/28/2018	change all 4172010501G parts to 4172010500G	
1.00	00B	04/16/2019	ADD D1752 D1802 D1852 D1952	
			ADD R795 AND CHANGE MVDD LOCAL SENSE PONIT	
			ADD R1092 R1093 MR1092 MR1093 and reassign gfx phase1-3 input source	
			ADD R4653 R4654 R4655 C4689	
			Change 701: 0.33uH/5260116000G R749: 909R/3160909000G NR704:30K/3160300200G R743: 18K/3160180200G C747:470pF/4170047100G C748:220pF/4	170022100G

2019/11/8 .V382 1 0 ->V382 1 1 Change Vdd cGFX Vdd SOC PWM IR35217 ->ON NCP81022N

MICRO-STAR INT'L CO.,LTD			
MS-V382			
Size Custom	Document Description REVISION HISTORY		Rev 11
Date: Friday, November 15, 2019		Sheet 27 of 28	

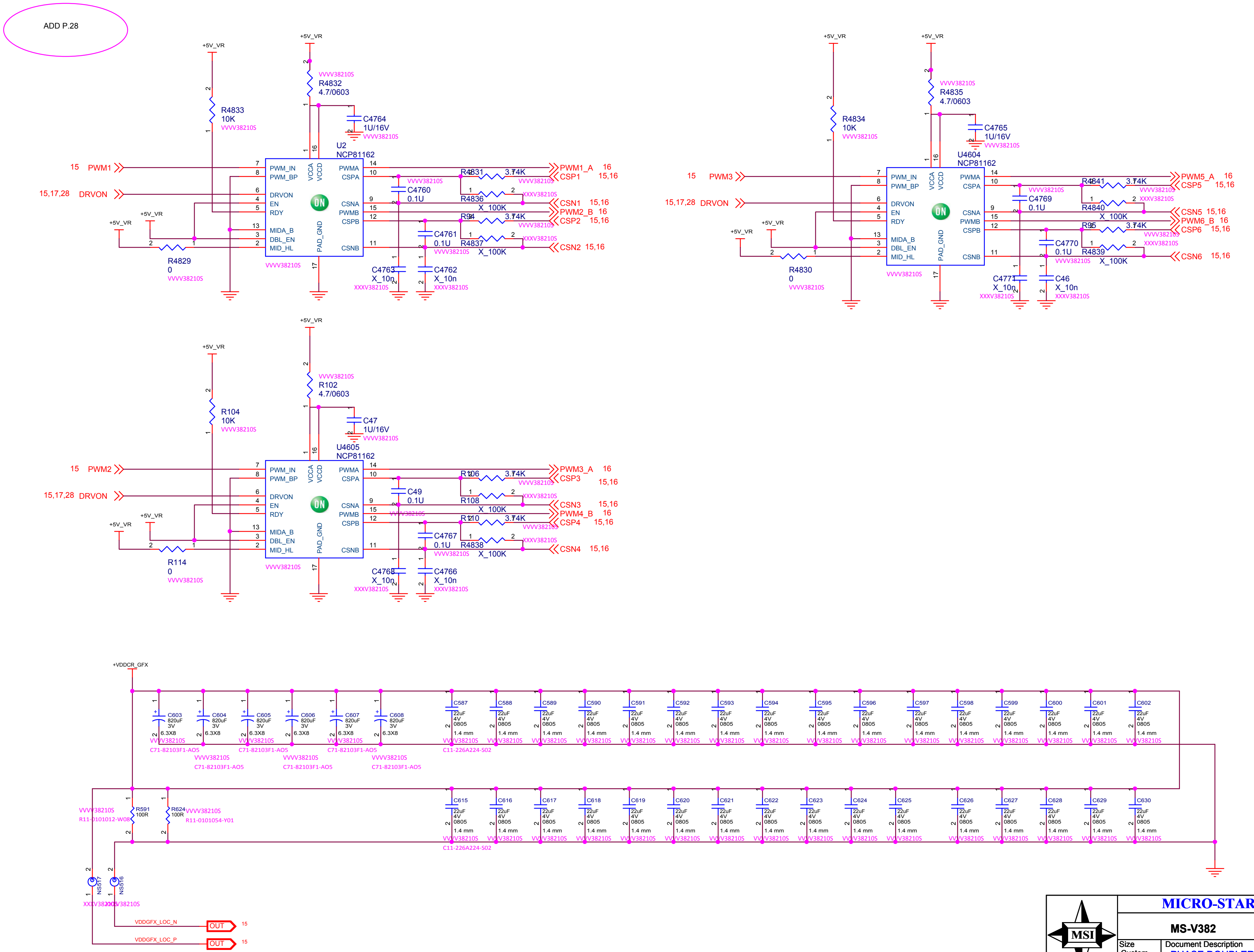
ADD P.28
+5V_VR
R4833
10K
VVVV38210S
R4832
4.7/0603
C4764
1U/16V
U2
NCP81162
PWM_IN
PWM_BP
DRVON
EN
RDY
MIDA_B
DBL_EN
MID_HL
VCCA
VCCD
PAD_GND
PWMA
CSPA
CSNA
PWMB
CSPB
CSNB
15 PWM1
15,17,28 DRVON
R4829
0
C4760
0.1U
C4761
0.1U
C4763
X_10n
XXXV38210S
C4762
X_10n
R4831
3.74K
R4836
X_100K
R94
3.74K
R4837
X_100K
PWM1_A 16
CSP1 15,16
CSN1 15,16
PWM2_B 16
CSP2 15,16
CSN2 15,16
15 PWM3
R4834
10K
R4835
4.7/0603
C4765
1U/16V
U4604
NCP81162
R4830
0
C4769
0.1U
C4770
0.1U
C4771
X_10n
C46
X_10n
R4841
3.74K
R4840
X_100K
R95
3.74K
R4839
X_100K
PWM5_A 16
CSP5 15,16
CSN5 15,16
PWM6_B 16
CSP6 15,16
CSN6 15,16
15 PWM2
R104
10K
R102
4.7/0603
C47
1U/16V
U4605
NCP81162
R114
0
C49
0.1U
C4767
0.1U
C4768
X_10n
C4766
X_10n
R106
3.74K
R108
X_100K
R110
3.74K
R4838
X_100K
PWM3_A 16
CSP3 15,16
CSN3 15,16
PWM4_B 16
CSP4 15,16
CSN4 15,16
+VDDCR_GFX
C603 C604 C605 C606 C607 C608
820uF
3V
6.3X8
C71-82103F1-AO5
C587 C588 C589 C590 C591 C592 C593 C594 C595 C596 C597 C598 C599 C600 C601 C602
C615 C616 C617 C618 C619 C620 C621 C622 C623 C624 C625 C626 C627 C628 C629 C630
22uF
4V
0805
1.4 mm
C11-226A224-S02
R591
100R
R11-0101012-W08
R624
100R
R11-0101054-Y01
NS517
NS516
XXXV38210S
VDDGFX_LOC_N
VDDGFX_LOC_P
OUT 15
OUT 15

MICRO-STAR INT'L CO.,LTD

MS-V382

Size	Document Description	Rev
Custom	PHASE DOUBLERS	11

Date: Friday, November 22, 2019 | Sheet 28 of 28