P2030

GK106, 2GB GDDR5, 192b mixed mode x16, x32

Stacked DVI-I/DVI-D + HDMI/DP + DP

TABLE OF CONTENTS

Page	Description
1	Table of Contents
2	PCI Express
3	MEMORY: GPU Partition A/B
4	MEMORY: FBA[31:0]
5	MEMORY: FBA[63:32]
6	MEMORY: FBB[31:0]
7	MEMORY: FBB[63:32]
8	MEMORY: GPU Partition C
9	MEMORY: FBC[31:0]
10	MEMORY: FBC[63:32]
11	MEMORY: DECAP
12	GPU PWR and GND
13	GPU Decoupling
14	DACA Interface
15	IFPAB DVI-I-DL
16	IFPEF DVI-D-DL
17	IFPC HDMI/DP
18	IFPD DP
19	MIOA/SLI/Stereo Hdr Interface
20	MISC1: Fan, Thermal, JTAG, GPIO
21	MISC2: ROM, XTAL, Straps
22	PS: 5V, PEX_VDD
23	PS: FBVDDQ
24	PS: NVVDD VID and PSI
25	PS: NVVDD Supply
26	PS: NVVDD Phase4
27	PS: Inputs, Filtering, and Monitoring
28	PS: Shutdown
29	PS: Board LED; Lighted SLI LED
30	MECH: Bracket/Thermal

SKU	VARIANT	NVPN	ASSEMBLY
B	BASE	600-12030-BASE-000	BASE LEVEL GENERIC SCHEMATIC ONLY, COMMON & NO_STUFF ASSEMBLY NOTES AND BOM NOT FINAL
1	SKU0000	600-12030-0000-000	GK106-400, 2048MB, GDDR5 192b Stacked DVI-I DL/DVI-D DL, HDMI, DP
2	SKU0010	600-12030-0010-000	GK106-250, 2048MB, GDDR5, 192b Stacked DVI-I DL/DVI-D, HDMI, DP
3	SKU0050	600-12030-0050-000	GK106-200, 2048MB, GDDR5, 128b Stacked DVI-I DL/DVI-D, HDMI, DP
4	SKU0500	600-52030-0500-000	GK106-875, 3072MB, GDDR5, 192b DVI-I, DP, DP Workstation
5	<UNDEFINED>	<UNDEFINED>	<UNDEFINED>
6	<UNDEFINED>	<UNDEFINED>	<UNDEFINED>
7	<UNDEFINED>	<UNDEFINED>	<UNDEFINED>
8	<UNDEFINED>	<UNDEFINED>	<UNDEFINED>
9	<UNDEFINED>	<UNDEFINED>	<UNDEFINED>
10	<UNDEFINED>	<UNDEFINED>	<UNDEFINED>
11	<UNDEFINED>	<UNDEFINED>	<UNDEFINED>
12	<UNDEFINED>	<UNDEFINED>	<UNDEFINED>
13	<UNDEFINED>	<UNDEFINED>	<UNDEFINED>
14	<UNDEFINED>	<UNDEFINED>	<UNDEFINED>
15	<UNDEFINED>	<UNDEFINED>	<UNDEFINED>

MSI CONFIDENTIAL
00017967 jonepei(裴亮樂)
RD(C)20130121 01 RMA工程課
吳積源 (00011601)

MICRO-STAR INT'L CO.,LTD
MS-V287
Size: Custom | Document Description: 01_Table of Contents | Rev: 1.0
Date: Friday, July 20, 2012 | Sheet 1 of 30

PCI Express

MICRO-STAR INT'L CO.,LTD

MS-V287

Size	Document Description	Rev
Custom	02_PCI Express	1.0

Date: Friday, July 20, 2012 Sheet 2 of 30

MEMORY: GPU Partition A/B

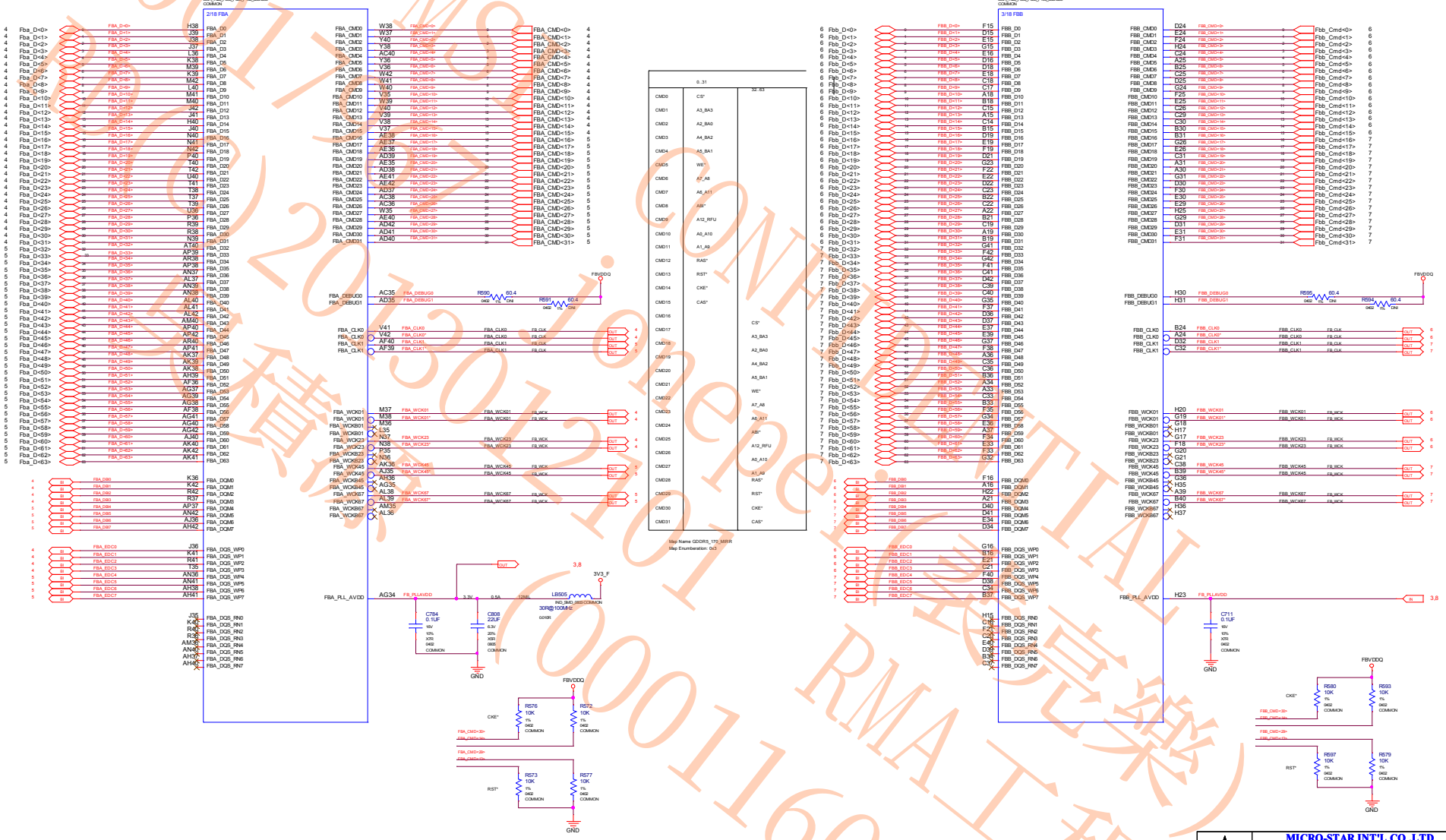

MICRO-STAR INT'L CO.,LTD		
MS-V287		
Size: Custom	Document Description: 03_MEMORY_GPU Partition A_B	Rev: 1.0
Date: Friday, July 20, 2012	Sheet 3 of 30	

MEMORY: FBA Partition 31..0

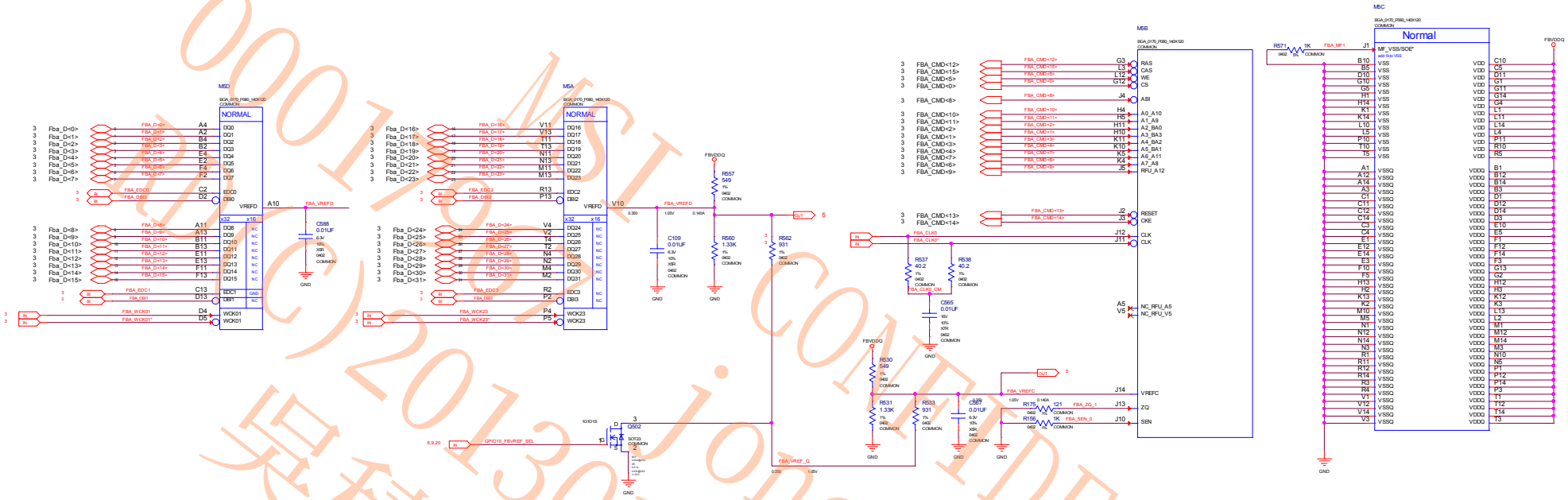

MICRO-STAR INT'L CO.,LTD		
MS-V287		
Size: Custom	Document Description: 04_MEMORY_FBA[31_0]	Rev: 1.0
Date: Friday, July 20, 2012	Sheet 4 of 30	

0001160 MSI CONFIDENTIAL
PDF(C)2013012101 jonepei(裴亮樂)
吳積源 RMA工程課 (00011601)

MEMORY: FBA Partition 63..32

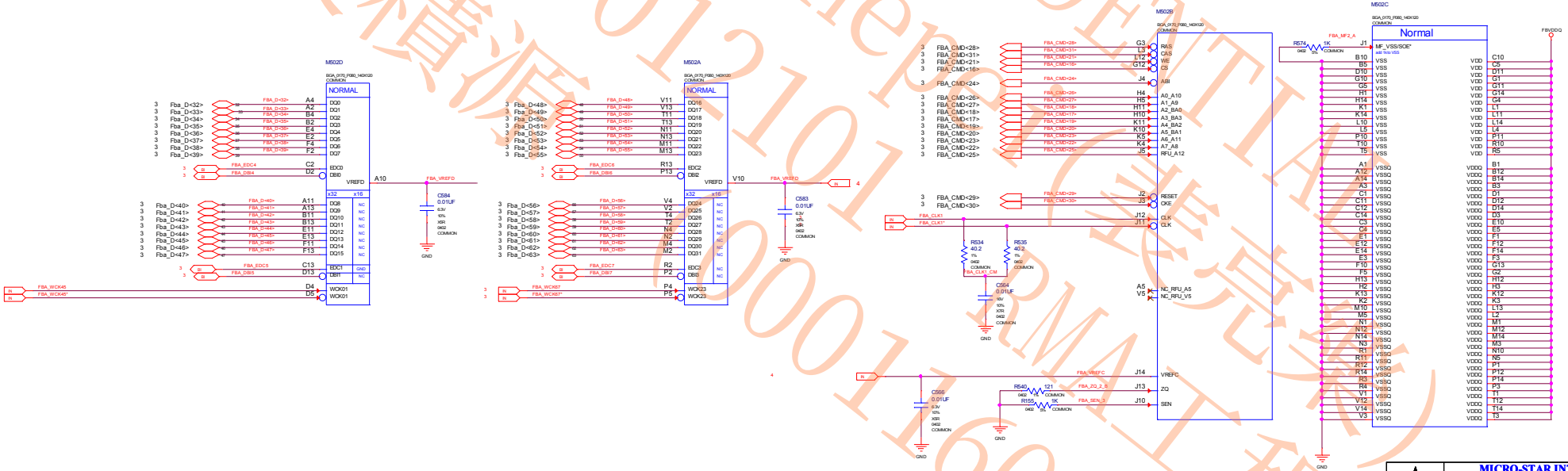

MSI CONFIDENTIAL
00017967 jonelin
RD(C)20130121010 (RMA工程課)
吳積源(2012/01/26)
(00011601)

MICRO-STAR INT'L CO.,LTD		
MS-V287		
Size: Custom	Document Description: 05_MEMORY_ FBA[63_32]	Rev: 1.0
Date: Friday, July 20, 2012	Sheet 5 of 30	

MEMORY: FBB Partition 31..0

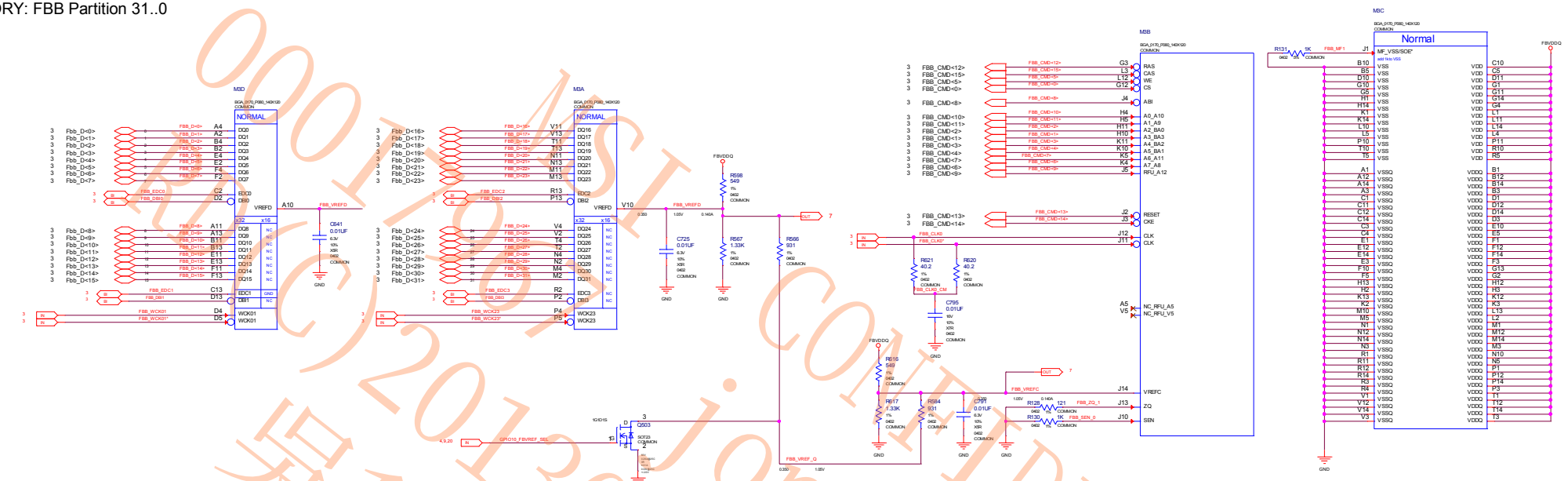

MICRO-STAR INT'L CO.,LTD		
MS-V287		
Size: Custom	Document Description: 06_MEMORY_ FBB[31_0]	Rev: 1.0
Date: Friday, July 20, 2012	Sheet 6 of 30	

0001 MSI CONFIDENTIAL
Jonepei(裴亮樂)
RMA工程課
(00011601)
吳積源

MEMORY: FBB Partition 63..32

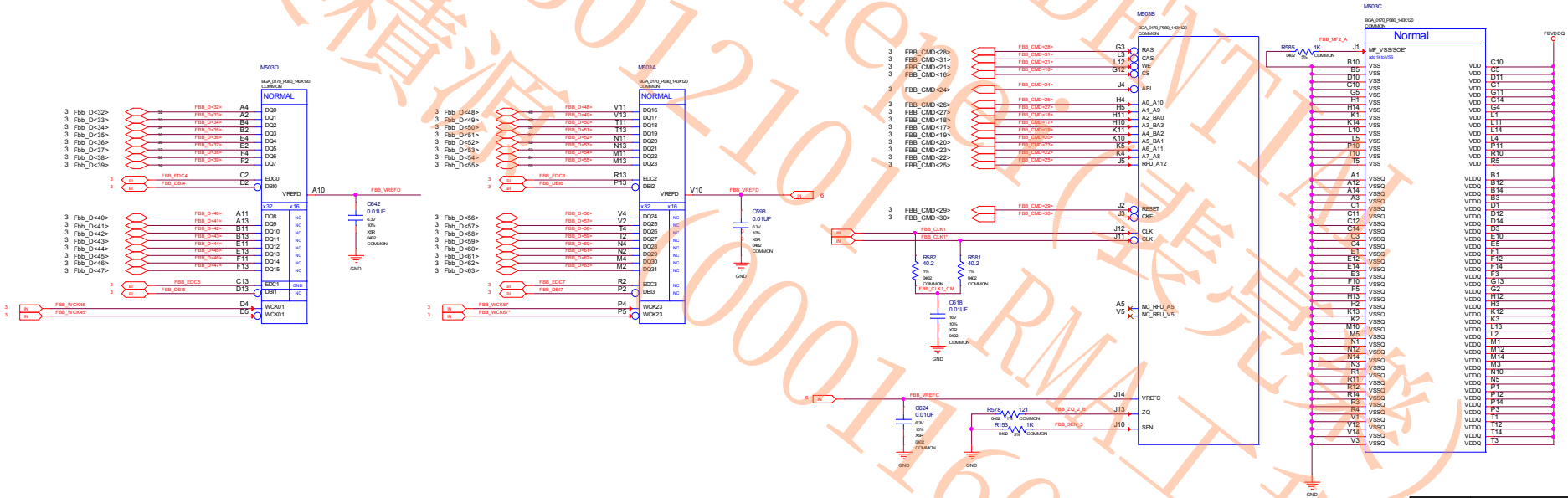

MICRO-STAR INT'L CO.,LTD		
MS-V287		
Size: Custom	Document Description: 07_MEMORY_ FBB[63_32]	Rev: 1.0
Date: Friday, July 20, 2012	Sheet 7 of 30	

MSI CONFIDENTIAL
00017967 jone.lin (RMA工程課)
RD(C)20130121 (00011601)
吳積源 (00011601)

MEMORY: GPU Partition C

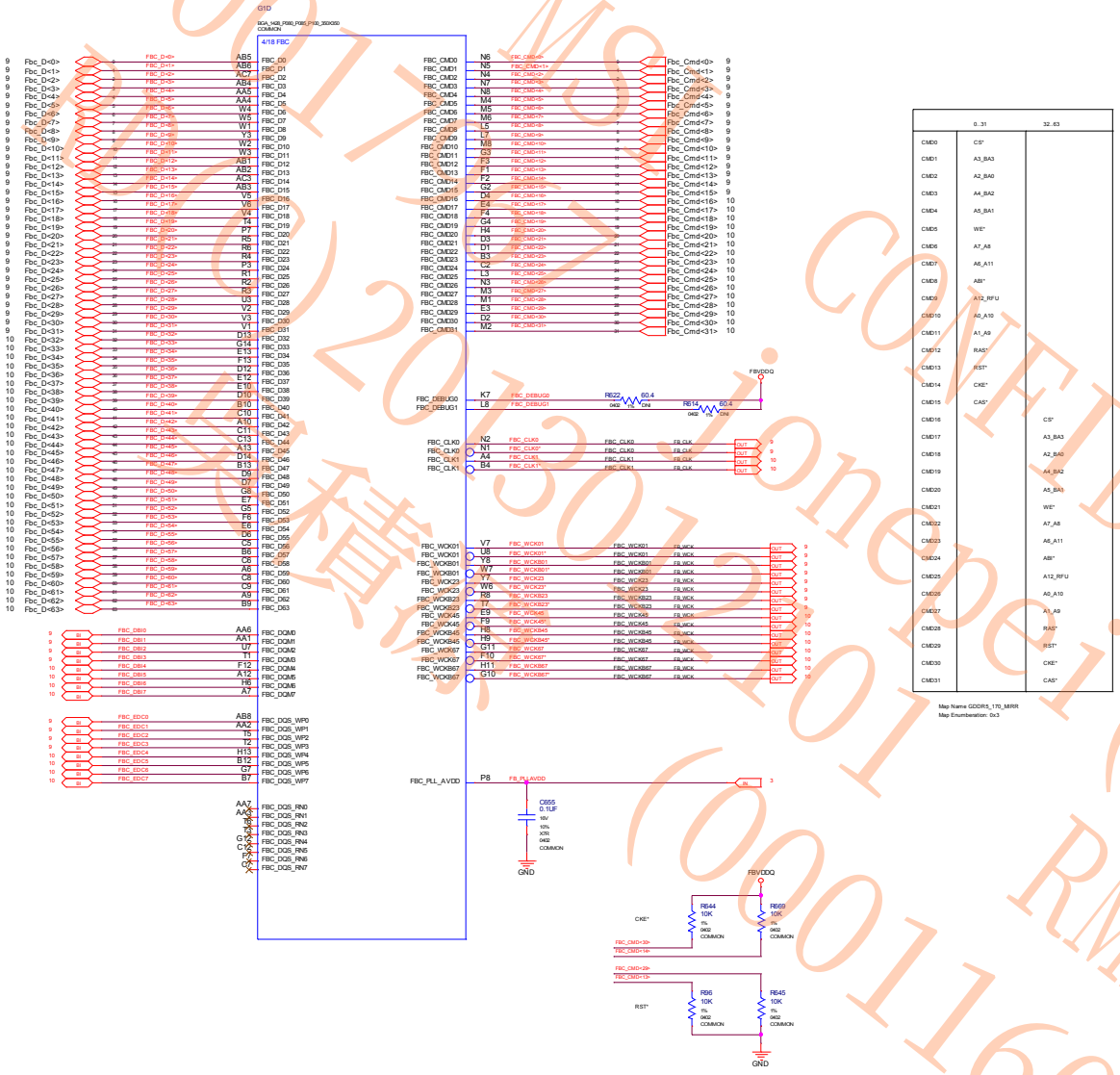

MICRO-STAR INT'L CO.,LTD		
MS-V287		
Size: Custom	Document Description: 08_MEMORY_ GPU Partition C	Rev: 1.0
Date: Friday, July 20, 2012	Sheet 8 of 30	

MSI CONFIDENTIAL
微星內部機密
(0011601)
RMA工程樣(裝完樂)
(0011601)

MEMORY: FBC Partition 31..0

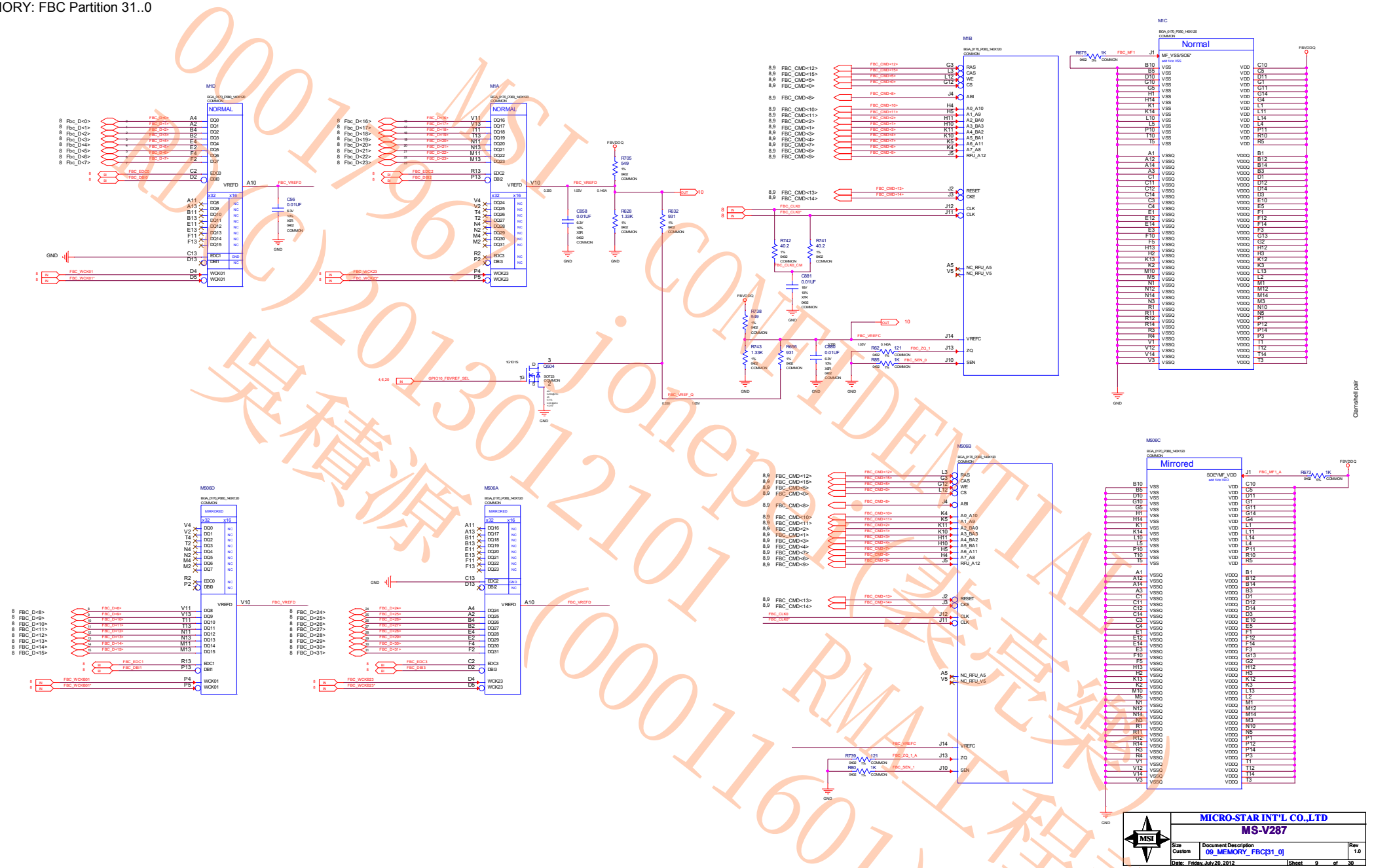

MICRO-STAR INT'L CO.,LTD

MS-V287

Size	Document Description	Rev
Custom	09_MEMORY_FBC[31_0]	1.0

Date: Friday, July 20, 2012 Sheet 9 of 30

MSI CONFIDENTIAL
(00011601)
RMA工程課

MEMORY: FBC Partition 63..32

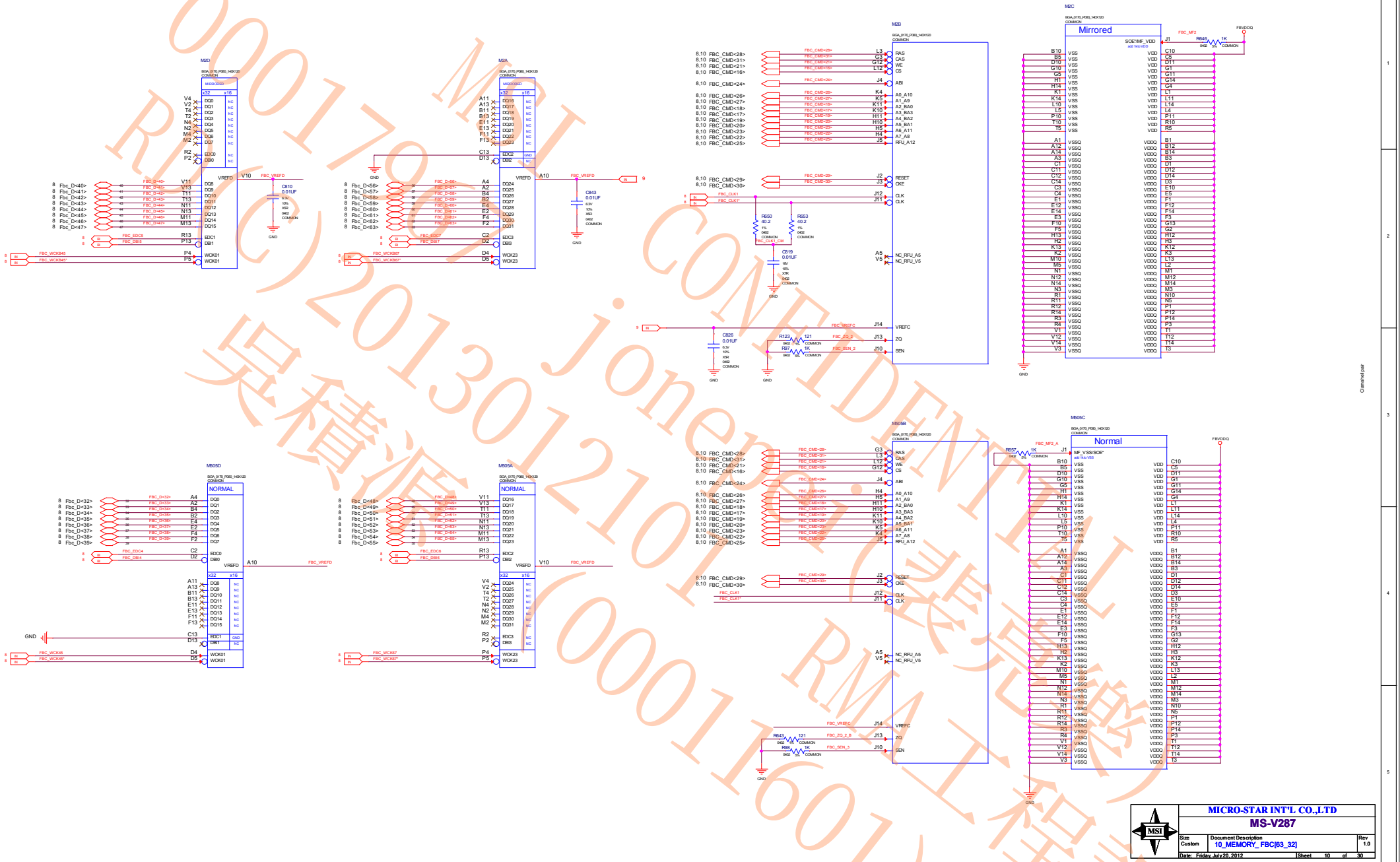

MICRO-STAR INT'L CO.,LTD

MS-V287

Size	Document Description	Rev
Custom	10_MEMORY_ FBC[63_32]	1.0

Date: Friday, July 20, 2012 Sheet 10 of 30

CONFIDENTIAL
(00011601)

MEMORY: DECAP

FBA

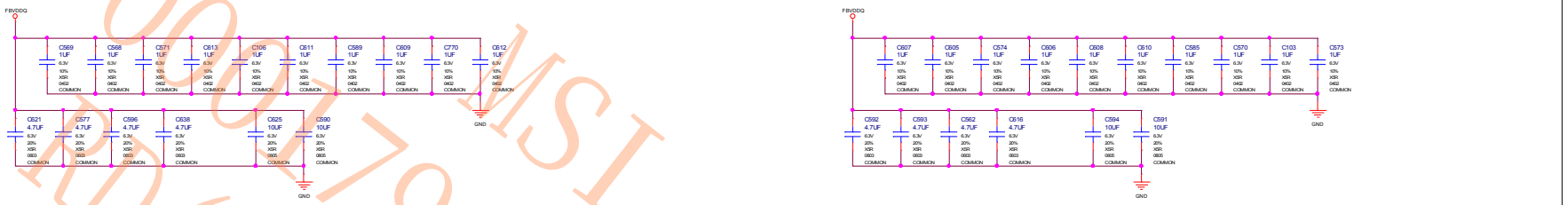

FBB

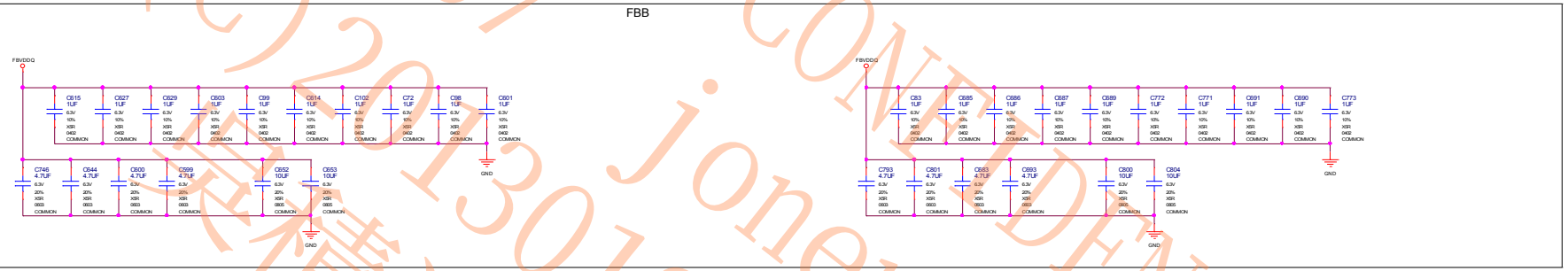

FBC

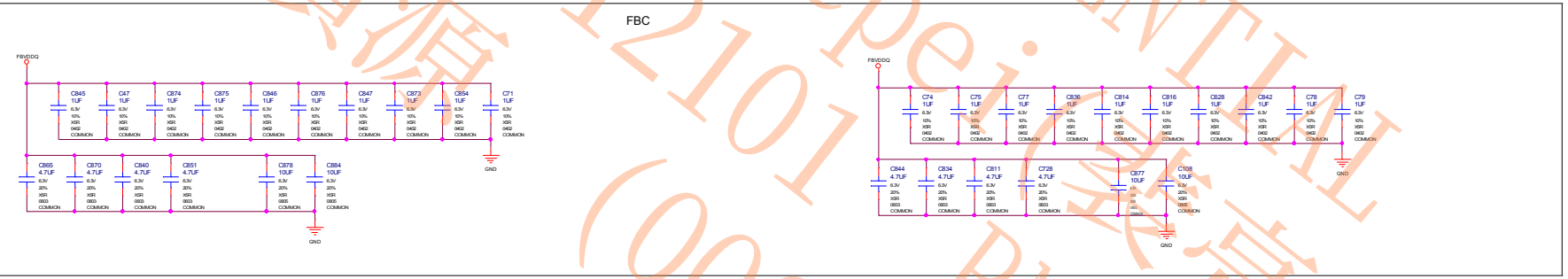

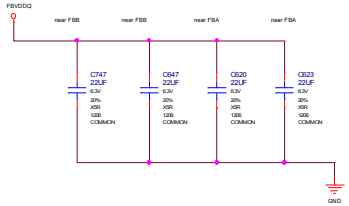

MICRO-STAR INT'L CO.,LTD		
MS-V287		
Size: Custom	Document Description: 11_MEMORY_DECAP	Rev: 1.0
Date: Friday, July 20, 2012	Sheet 11 of 30	

0001167 MSI RD(C)20130121012 Jonepei 樣品製作完畢 CONFIDENTIAL RMA工程課 (0001160)

GPU PWR and GND

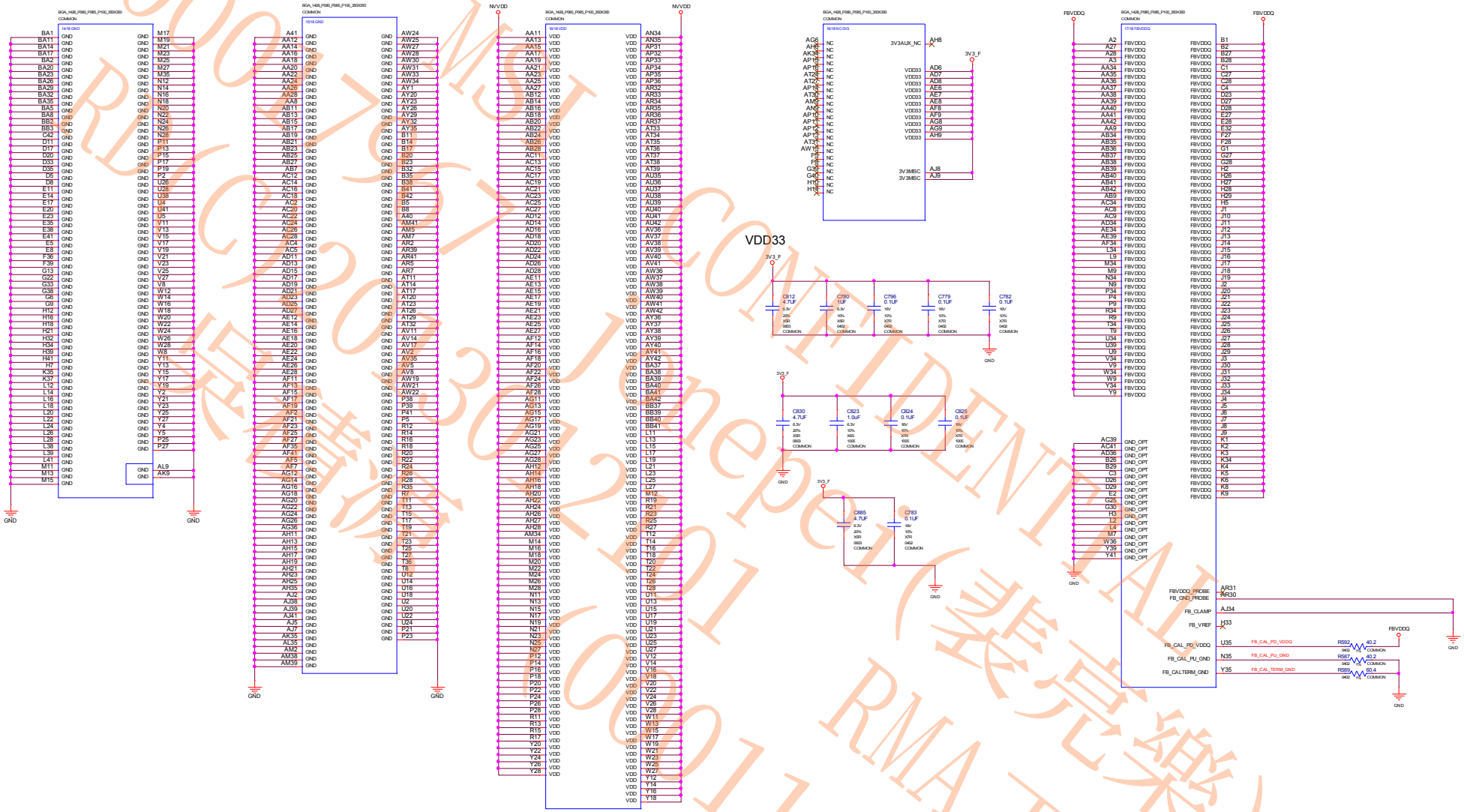

MICRO-STAR INT'L CO.,LTD		
MS-V287		
Size: Custom	Document Description: 12_GPU PWR and GND	Rev: 1.0
Date: Friday, July 20, 2012	Sheet 12 of 30	

GPU Decoupling

FBVDDQ

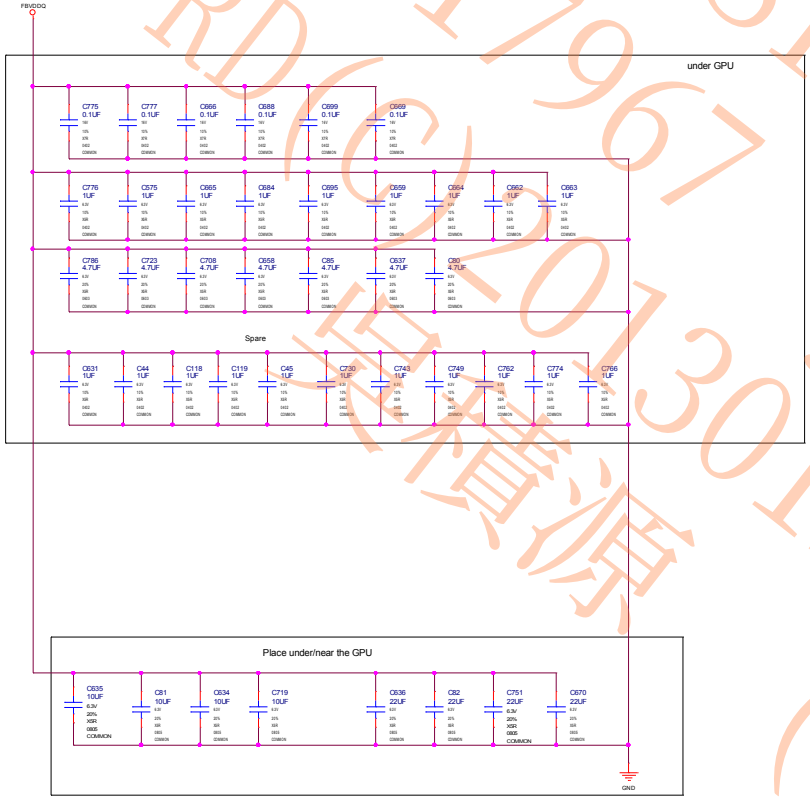

NVVDD

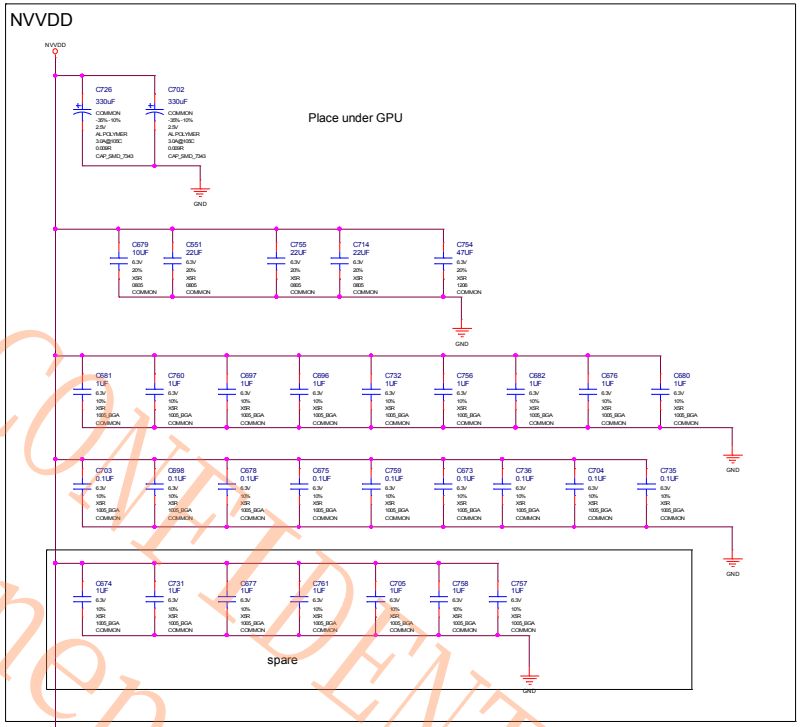

	guidelines	actual
Under GPU	2x 330uF 9mOhm	1x 330uF 9mOhm
	1x 47uF 1206	1x 22uF 1206
	2x 22uF 805	4x 22uF 805
	2x 10uF 805	9x 1uF 402
	9x 1uF 402	9x 0.1uF 402
	9x 0.1uF 402	
		spare sites (not stuffed)
		1x 7343
		27x 402
near GPU	1x 47uF 1206	2x 22uF
	2x 22uF 805	spare sites (not stuffed)
	2x 10uF 805	3x 805
	2x 4.7uF 603	
	1x 1uF 402	
	1x 0.1uF 402	

MICRO-STAR INT'L CO.,LTD		
MS-V287		
Size: Custom	Document Description: 13_GPU Decoupling	Rev: 1.0
Date: Friday, July 20, 2012	Sheet 13 of 30	

0001796 7 MSI Jonpei(装配线) 2012101 CONFIDENTIAL RD(6)-20130121 RMA工程课 (0001160 1) 拒绝盗版

DACA Interface

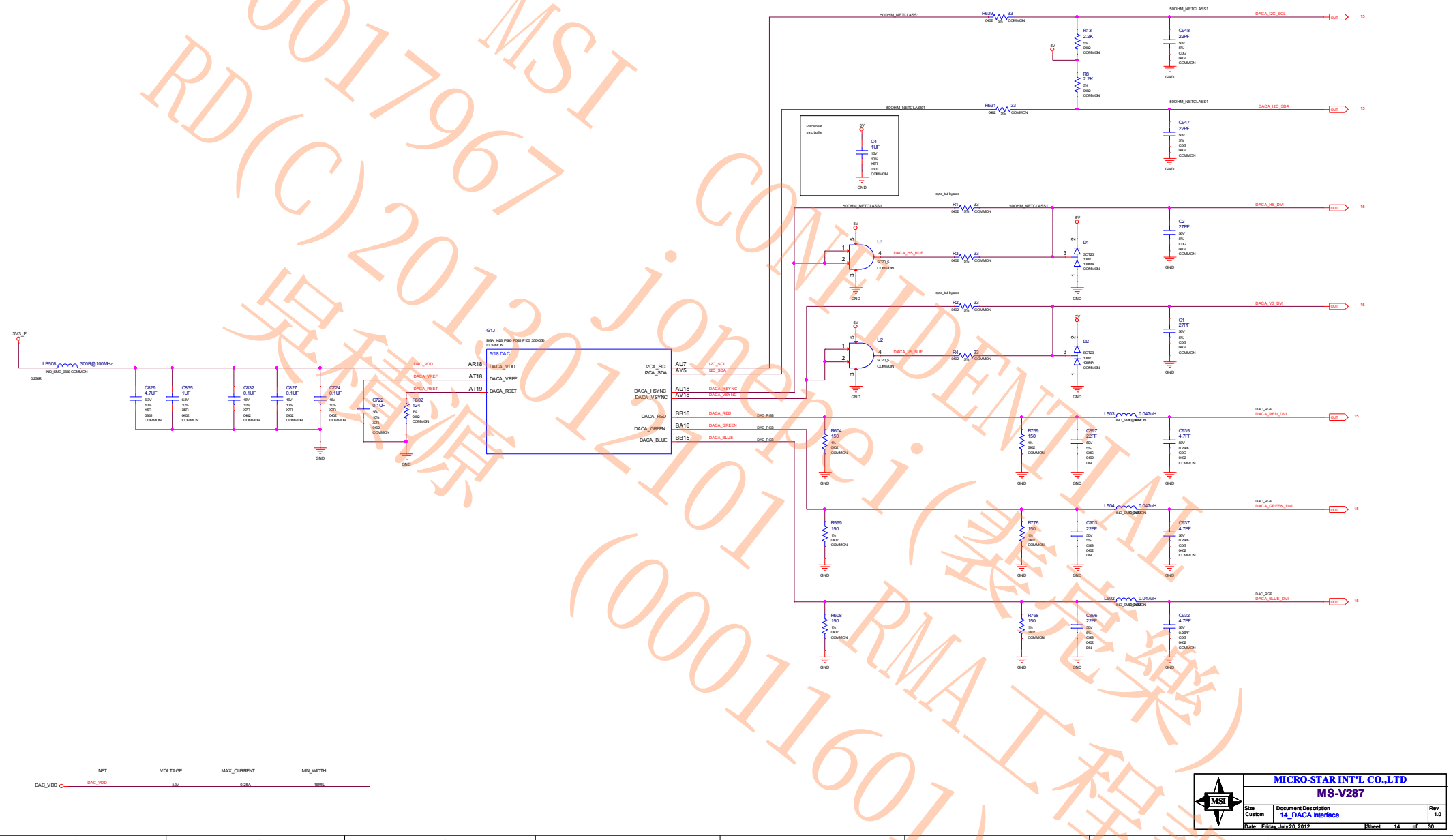

MICRO-STAR INT'L CO.,LTD		
MS-V287		
Size: Custom	Document Description: 14_DACA Interface	Rev: 1.0
Date: Friday, July 20, 2012	Sheet 14 of 30	

MSI CONFIDENTIAL
00017967 jonepei(裴宗樂)
RD(C)20130121001 RMA工程課
吳積源 (00011601)

IFPAB DVI-I-DL

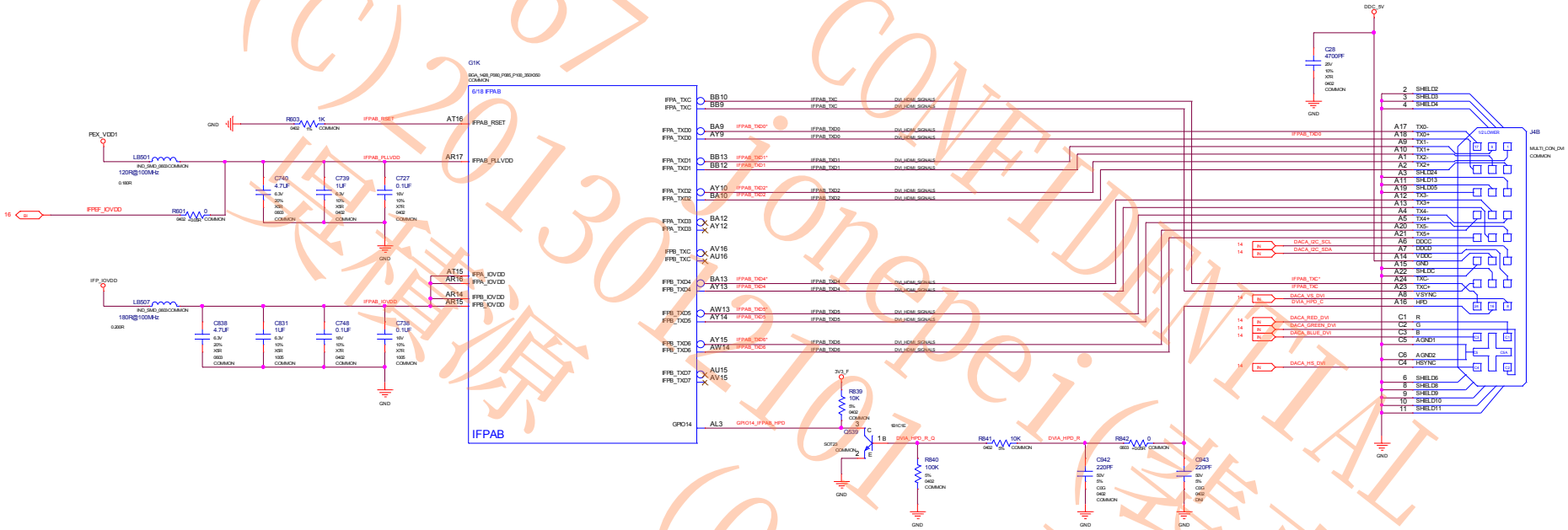

MICRO-STAR INT'L CO.,LTD	
MS-V287	
Size: Custom	Document Description: 15_IFPAB DVI-I-DL
Rev: 1.0	
Date: Friday, July 20, 2012	Sheet 15 of 30

MSI CONFIDENTIAL
00017967
RD(C)20130720101
(00011601)
RMA工程課
(廖亮樂)

IFPEF DVI-D-DL

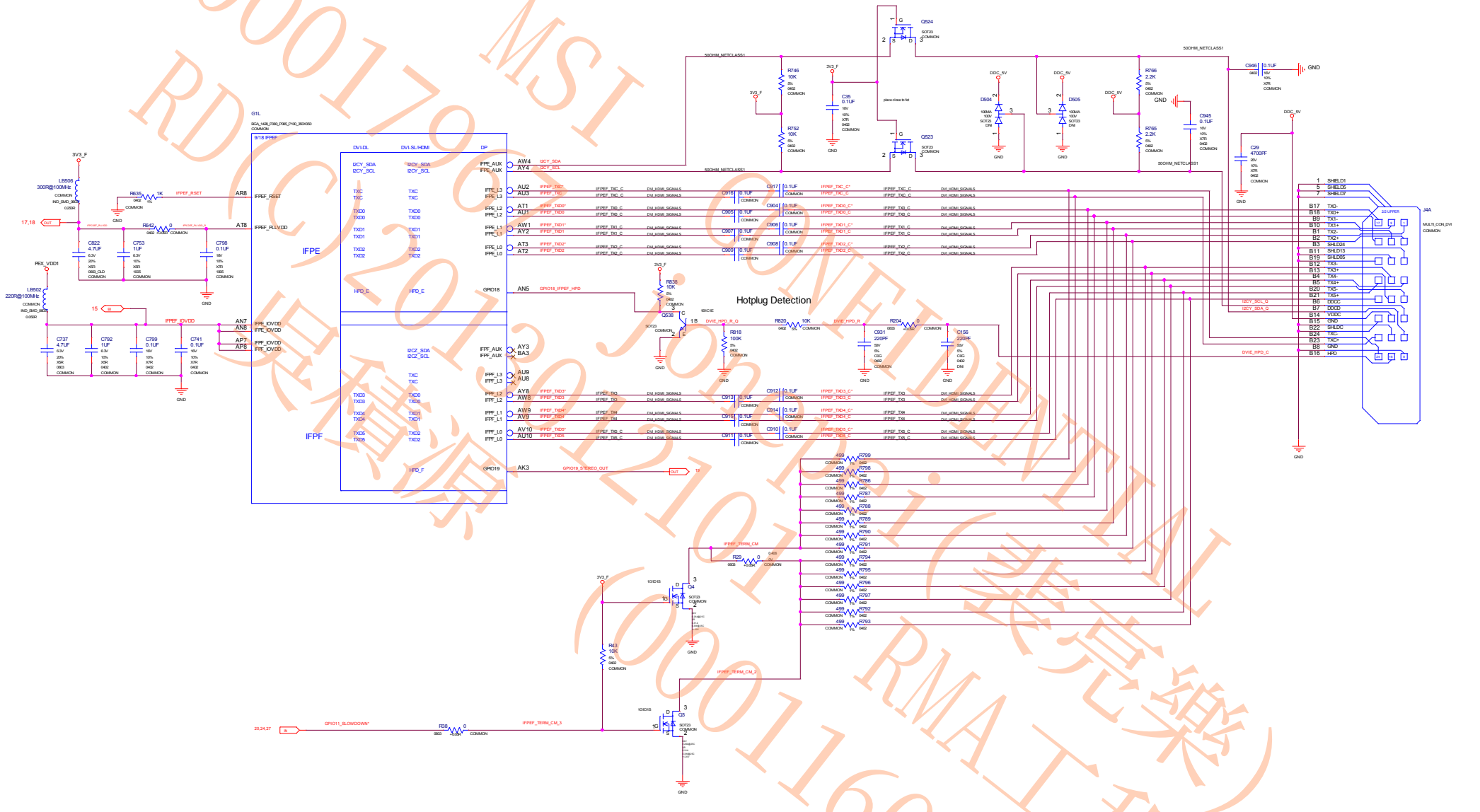

MICRO-STAR INT'L CO.,LTD	
MS-V287	
Size: Custom	Document Description: 16_IFPEF DVI-D-DL
Rev: 1.0	
Date: Friday, July 20, 2012	Sheet 16 of 30

MSI CONFIDENTIAL
RDC(2012)2012101(裴亮樂)
RMA工程課
(00011601)

IFPC HDMI/DP

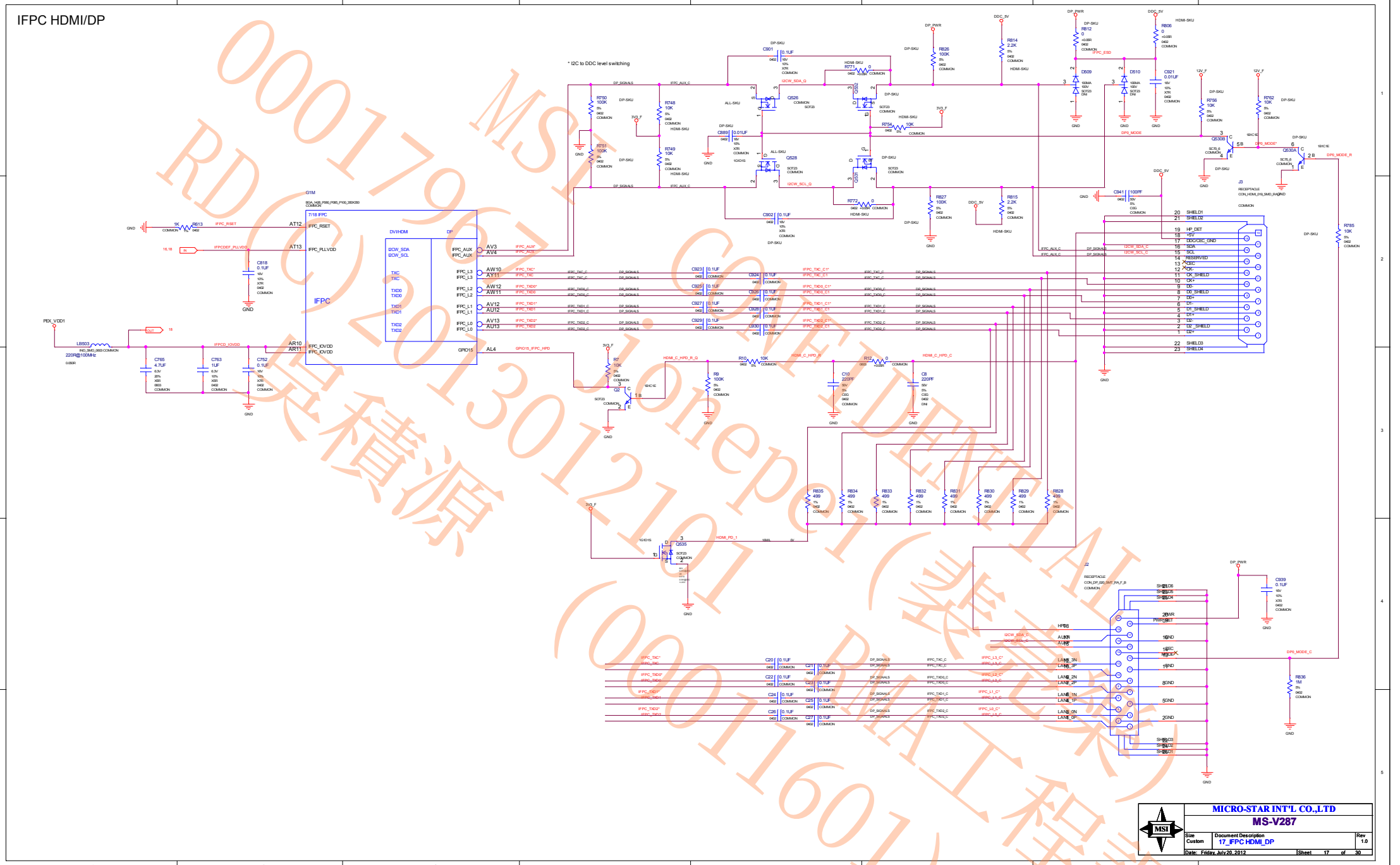

MICRO-STAR INT'L CO.,LTD

MS-V287

Size	Document Description	Rev
Custom	17_IFPC HDMI_DP	1.0

Date: Friday, July 20, 2012 Sheet 17 of 30

MSI CONFIDENTIAL
00017967 RD(C)20130121 (00011601)
Jionepo (美積源)
BMA工程課

IFPD DP

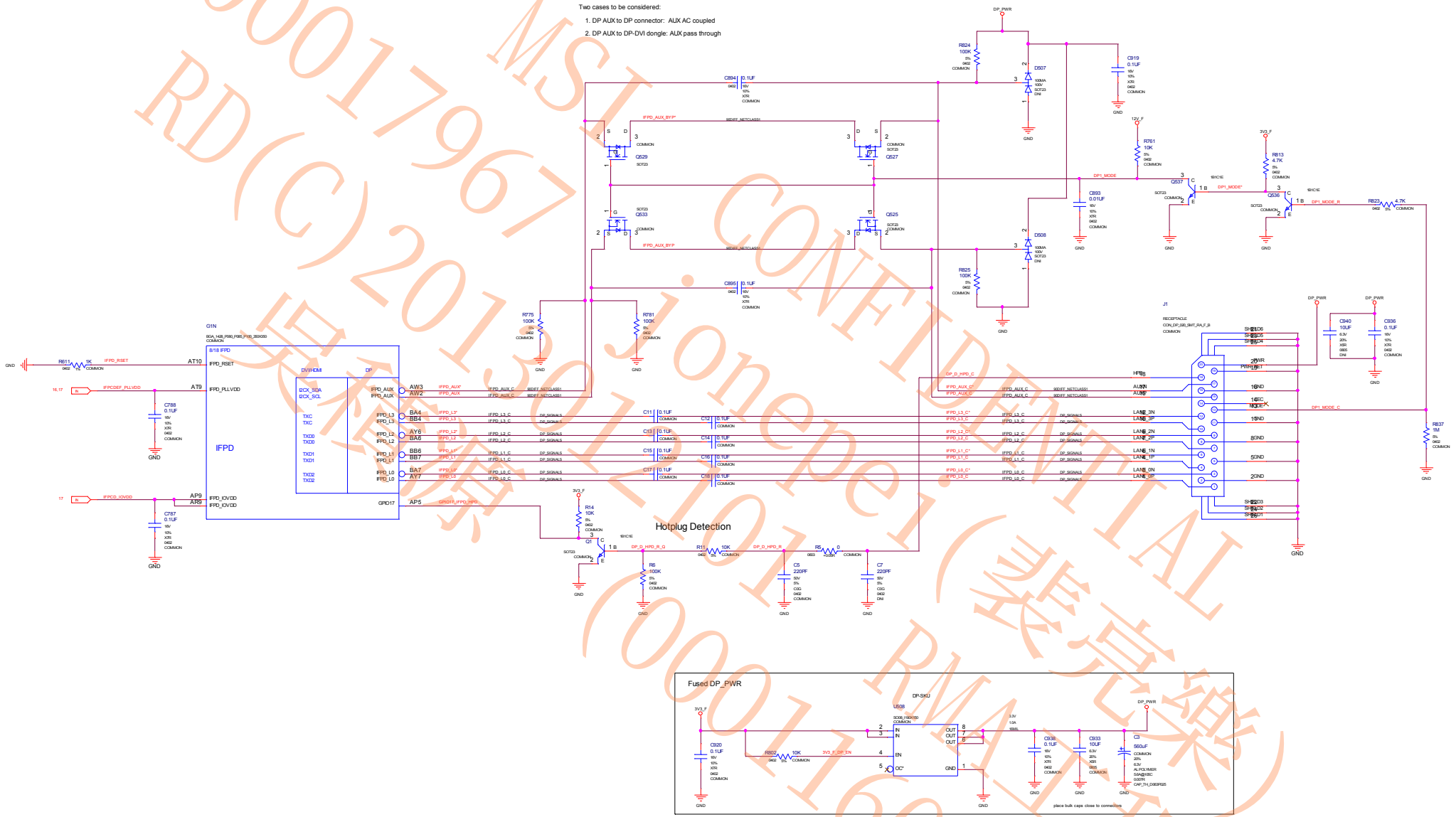

MICRO-STAR INT'L CO.,LTD		
MS-V287		
Size: Custom	Document Description: 18_IFPD DP	Rev: 1.0
Date: Friday, July 20, 2012	Sheet 18 of 30	

MSI CONFIDENTIAL
00017967 Jionepei (裴宗樂)
RD(C)2013012101 RMA工程課
吳建興 (00011601)

MIOA/SLI Interface

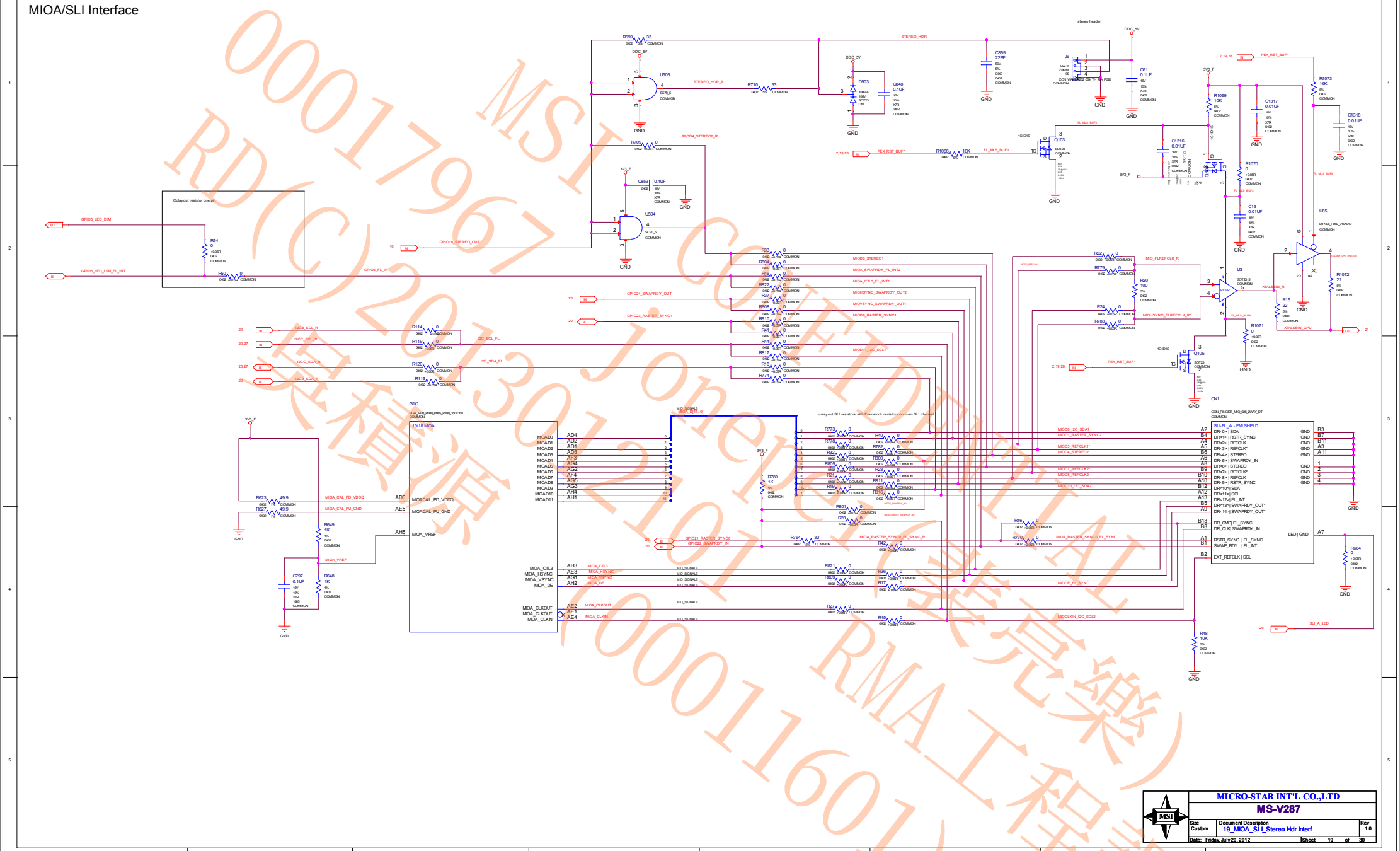

MICRO-STAR INT'L CO.,LTD		
MS-V287		
Size: Custom	Document Description: 19_MIOA_SLI_Stereo Hdr Interf	Rev: 1.0
Date: Friday, July 20, 2012	Sheet 19 of 30	

MSI CONFIDENTIAL
Jonelee
RMA工程課
(0001601)
(0001796)
(2013012101)
(全程資料 業完樂)

MISC1: Fan, Thermal, JTAG, GPIO

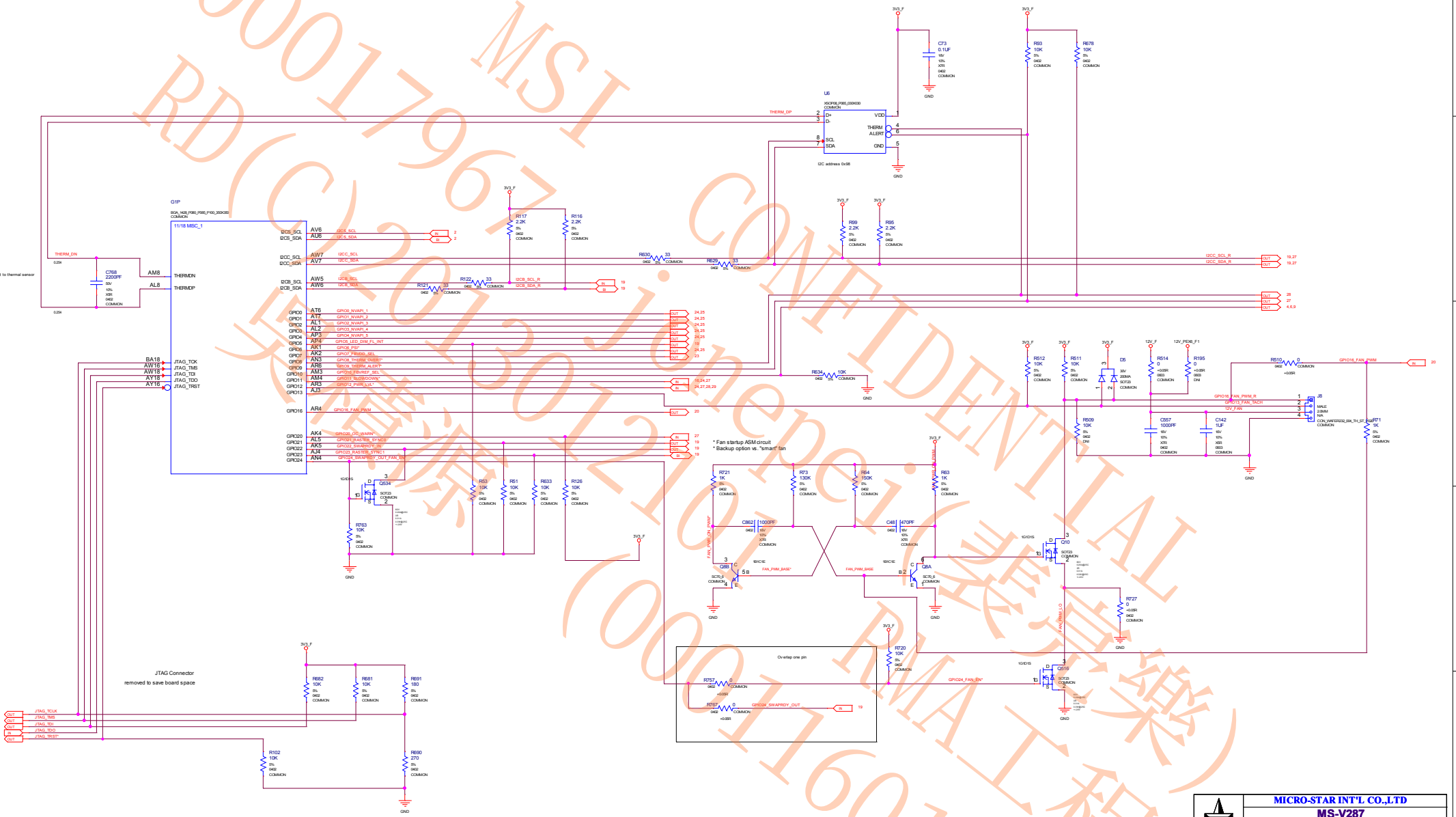

MICRO-STAR INT'L CO.,LTD		
MS-V287		
Size: Custom	Document Description: 20_MISC1_ Fan, Thermal, JTAG,	Rev: 1.0
Date: Friday, July 20, 2012	Sheet 20 of 30	

MSI CONFIDENTIAL
0001796 Jimmy(華燁)
RD(C)20120210
(0001601)
RMA工程課
吳耀燁

MISC2: ROM, XTAL, Straps

STRAP0	USER_BIT [3:0]*	0000*	5K PD*
STRAP1	3GIO_PADCFG_LUT_ADR*	0000*	5K PD Desktop*
STRAP2	PCI_DEVID [3:0]*	0000 - (0x11C0)*	5K PD -400 GPU*
		0010 - (0x11C1)*	10K PD -250 GPU*
		0050 - (0x11C4)*	25K PD -225 GPU*
		0500 - (0x11FA)*	15K PU -875 GPU*
STRAP3	SOR_EXPOSED [3:0]*	1111*	45K PU*
STRAP4	*		
ROM_SI	PEX_SPD_CHANGE_GEN3*	1* ENABLED*	45K PD*
	PEX_MAX_SPEED*	1* FOR GEN2/3*	
	DP_PLL_VDD_33V*	1* FOR 3_3V*	
	RAMCFG[3]*	0*	35K PD*
	RAMCFG[2]*	1*	45K PD*
	RAMCFG[1]*	1*	
	RAMCFG[0]*	0*	
ROM_SO	FB[1]_APERTURE_SIZE*	0* For 128MB*	30k PD*
	FB[0]_APERTURE_SIZE*	1* For 128MB*	
	SMB_ALT_ADDR*	0*	
	VGA_DEVICE*	1*	
ROM_SCLK	PCI_DEVID_EXT[4]*	0* For 0x11C0*	25K PD*
	SUB_VENDOR*	1* Dedicated BIOS*	25K PD*
	PCI_DEVID_EXT[5]*	0* For 0x11C0*	25K PD*
	PEX_PLL_EN_TERM100*	0* ENABLED*	35K PU*

	GND	3V3
5k	0000	1000
10k	0001	1001
15k	0010	1010
20k	0011	1011
25k	0100	1100
30k	0101	1101
35k	0110	1110
45k	0111	1111

	MULTI_STRAP_REF0_GND
BINARY PRODUCTION	NC
BINARY BRINGUP	NC
MULTI-LEVEL	40.2k 1% TO GND

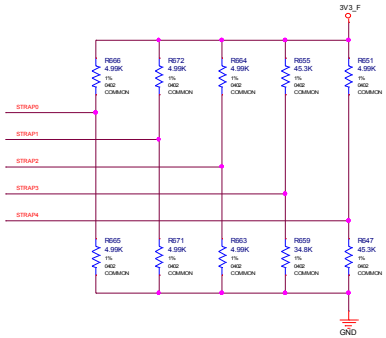

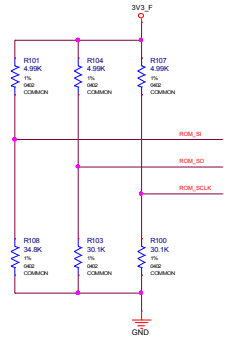

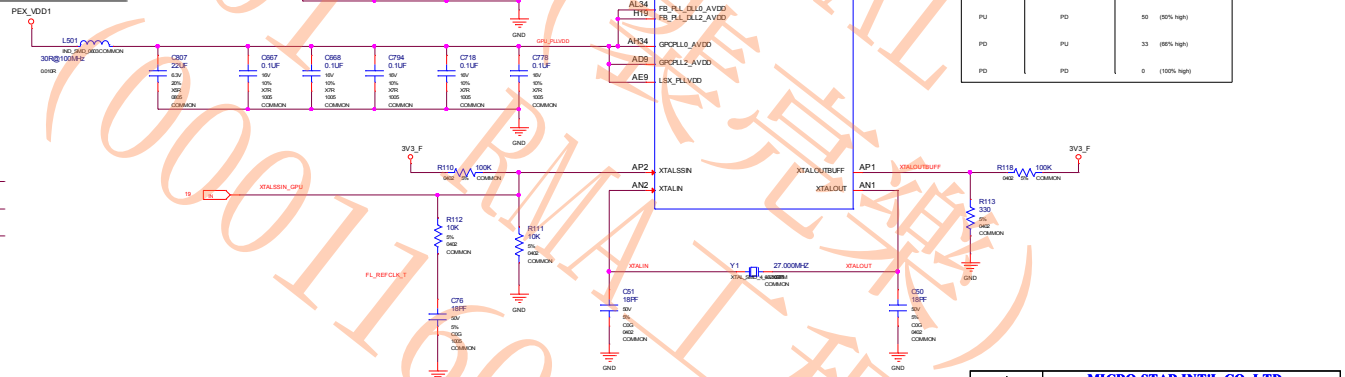

XTALSSIN	XTALOUTBUFF	SmartFan PWM %
PU	PU	66 (33% high)
PU	PD	50 (50% high)
PD	PU	33 (66% high)
PD	PD	0 (100% high)

MICRO-STAR INT'L CO.,LTD		
MS-V287		
Size: Custom	Document Description: 21_MISC2_ ROM, XTAL, Straps	Rev: 1.0
Date: Friday, July 20, 2012	Sheet 21 of 30	

0001796 MSI
RD(C)20130121011(0001160)
CONFIDENTIAL
Jonepei(仅完成)
RMA工程课

PS: 5V, PEX_VDD

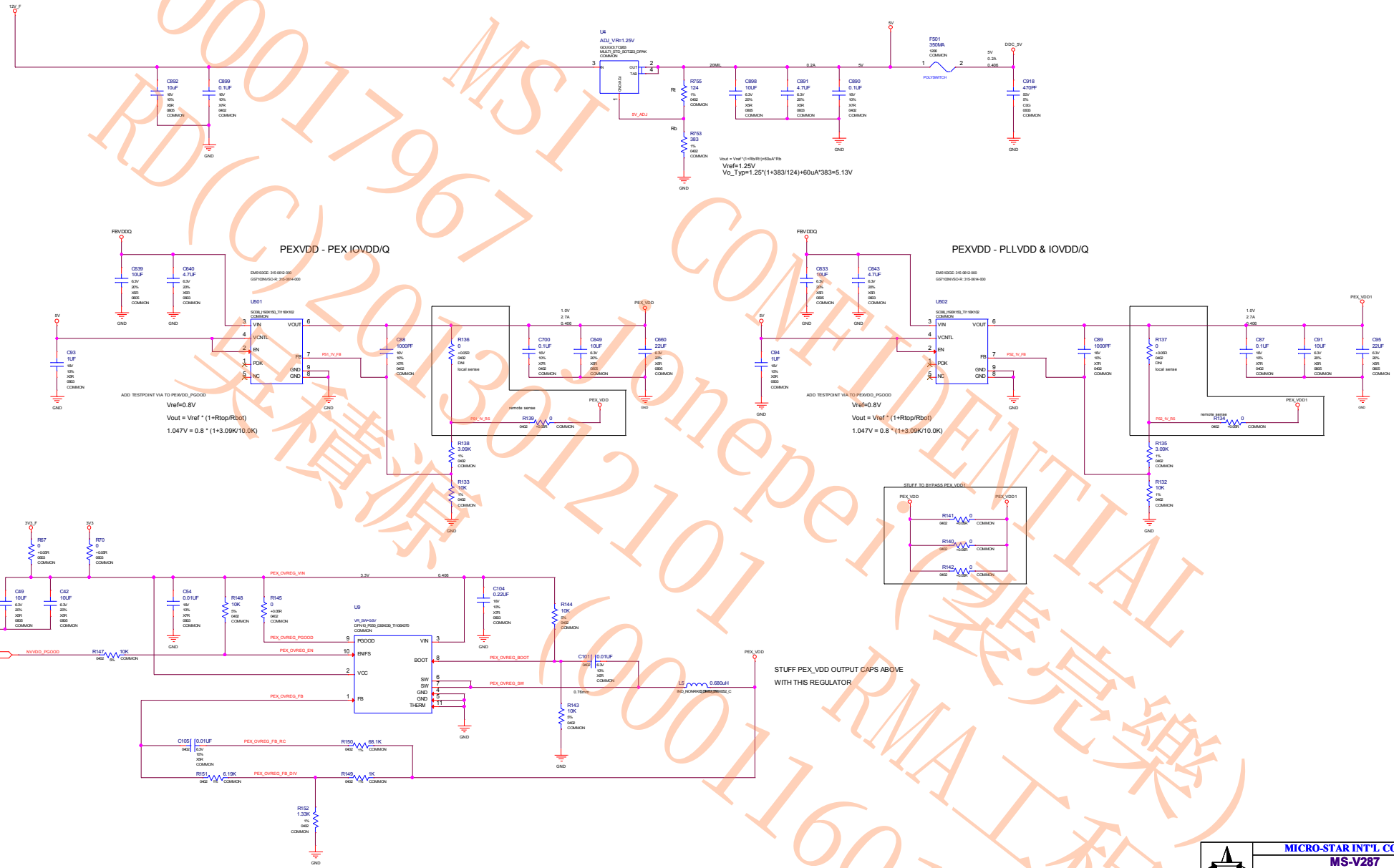

MICRO-STAR INT'L CO.,LTD		
MS-V287		
Size: Custom	Document Description: 22_PS_5V, PEX_VDD	Rev: 1.0
Date: Friday, July 20, 2012	Sheet 22 of 30	

MSI CONFIDENTIAL
RD(C)20130121 Jonepei(裴亮樂)
RMA工程課
(00011601)
英積源

PS: FBVDDQ

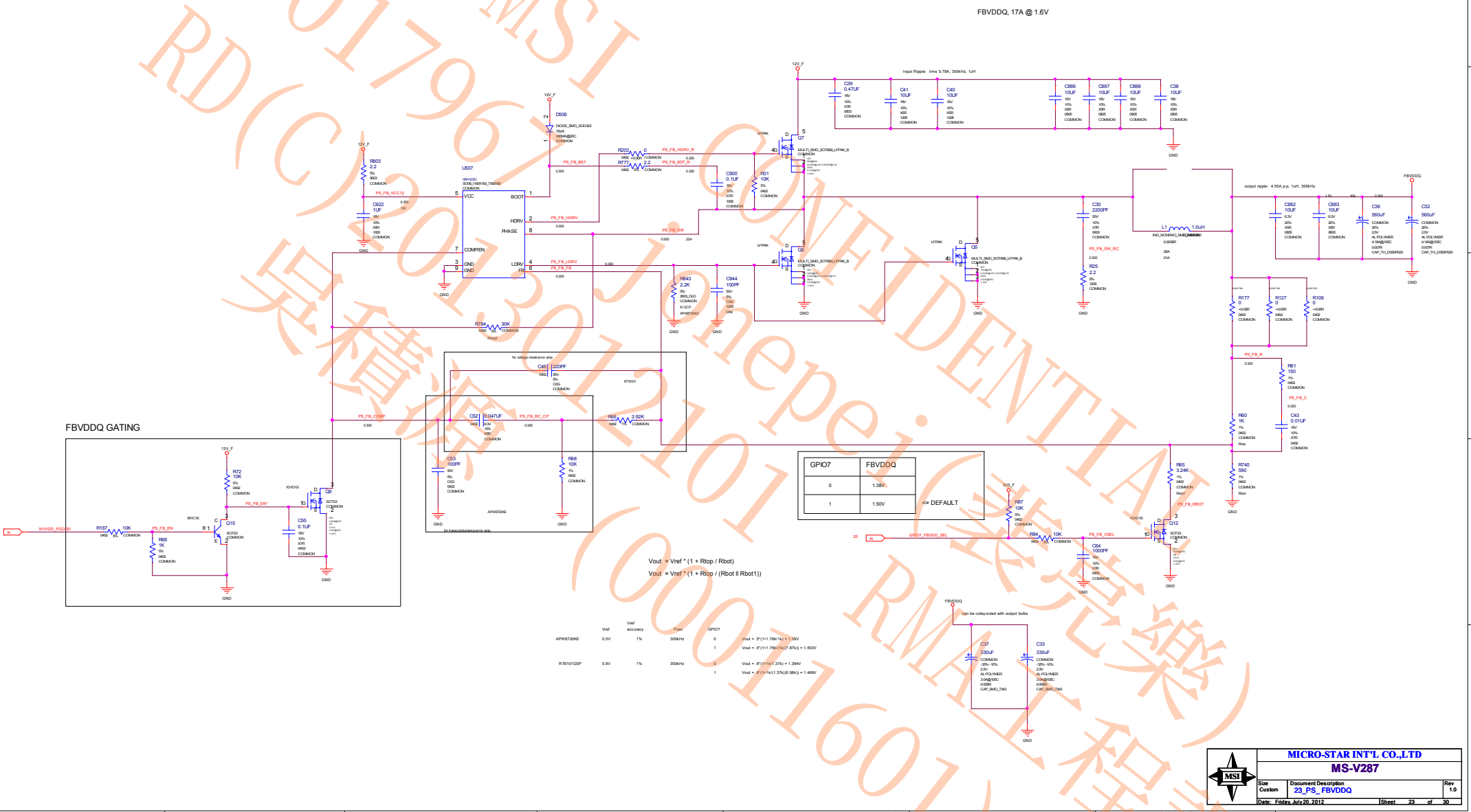

GPIO7	FBVDDQ	
0	1.38V	
1	1.50V	<= DEFAULT

	Vref	Vref accuracy	Fosc	GPIO7	
APW8720KE	0.5V	1%	300kHz	0	Vout = .5*(1+1.78k/1k) = 1.39V
				1	Vout = .5*(1+1.78k/(1k)(7.87k)) = 1.503V
RT8101GSP	0.8V	1%	300kHz	0	Vout = .8*(1+1k/1.37k) = 1.384V
				1	Vout = .8*(1+1k/(1.37k)(6.98k)) = 1.499V

MSI 00017961 RD(C)20130121101 CONFIDENTIAL 吳積源 (00011601) 吳積源 RMA 工程課

PS: NVVDD Controller, VID and PSI

VID Table

GPIO4	GPIO3	GPIO2	GPIO1	GPIO0	VOUT
VID_5	VID_4	VID_3	VID_2	VID_1	
0	0	0	0	0	1.2125V
0	0	0	0	1	1.2000V
0	0	0	1	0	1.1875V
0	0	0	1	1	1.1750V
0	0	1	0	0	1.1625V
0	0	1	0	1	1.1500V
0	0	1	1	0	1.1375V
0	0	1	1	1	1.1250V
0	1	0	0	0	1.1125V
0	1	0	0	1	1.1000V
0	1	0	1	0	1.0875V
0	1	0	1	1	1.0750V
0	1	1	0	0	1.0625V
0	1	1	0	1	1.0500V
0	1	1	1	0	1.0375V
0	1	1	1	1	1.0250V
1	0	0	0	0	1.0125V
1	0	0	0	1	1.0000V
1	0	0	1	0	0.9875V
1	0	0	1	1	0.9750V
1	0	1	0	0	0.9625V
1	0	1	0	1	0.9500V
1	0	1	1	0	0.9375V
1	0	1	1	1	0.9250V
1	1	0	0	0	0.9125V
1	1	0	0	1	0.9000V
1	1	0	1	0	0.8875V
1	1	0	1	1	0.8750V
1	1	1	0	0	0.8625V
1	1	1	0	1	0.8500V
1	1	1	1	0	0.8375V
1	1	1	1	1	0.8250V

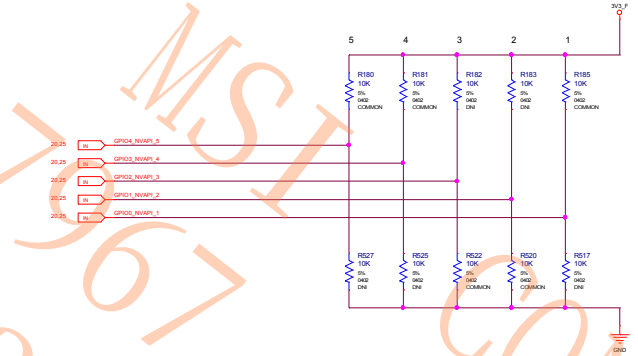

GPIO12_PWR_LVL	GPU SPEED
0	Slow
1	Normal

PEX Input - Power Level/PSI* Control

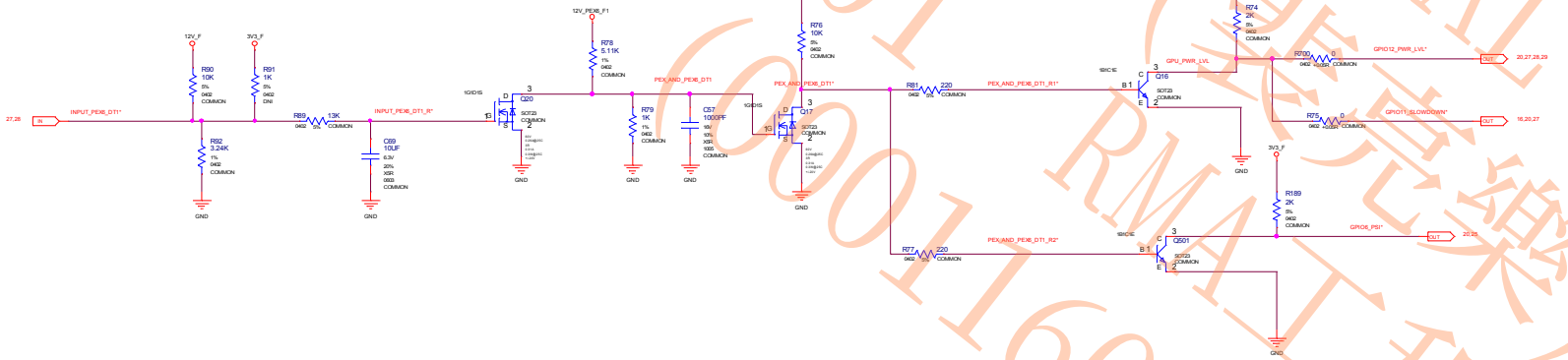

MICRO-STAR INT'L CO.,LTD		
MS-V287		
Size: Custom	Document Description: 24_PS_ NVVDD VID and PSI	Rev: 1.0
Date: Friday, July 20, 2012	Sheet 24 of 30	

MSI CONFIDENTIAL
Jonepei(非完整)
RD(6)-20130121011
RMA工程樣
(0001601)
0001967

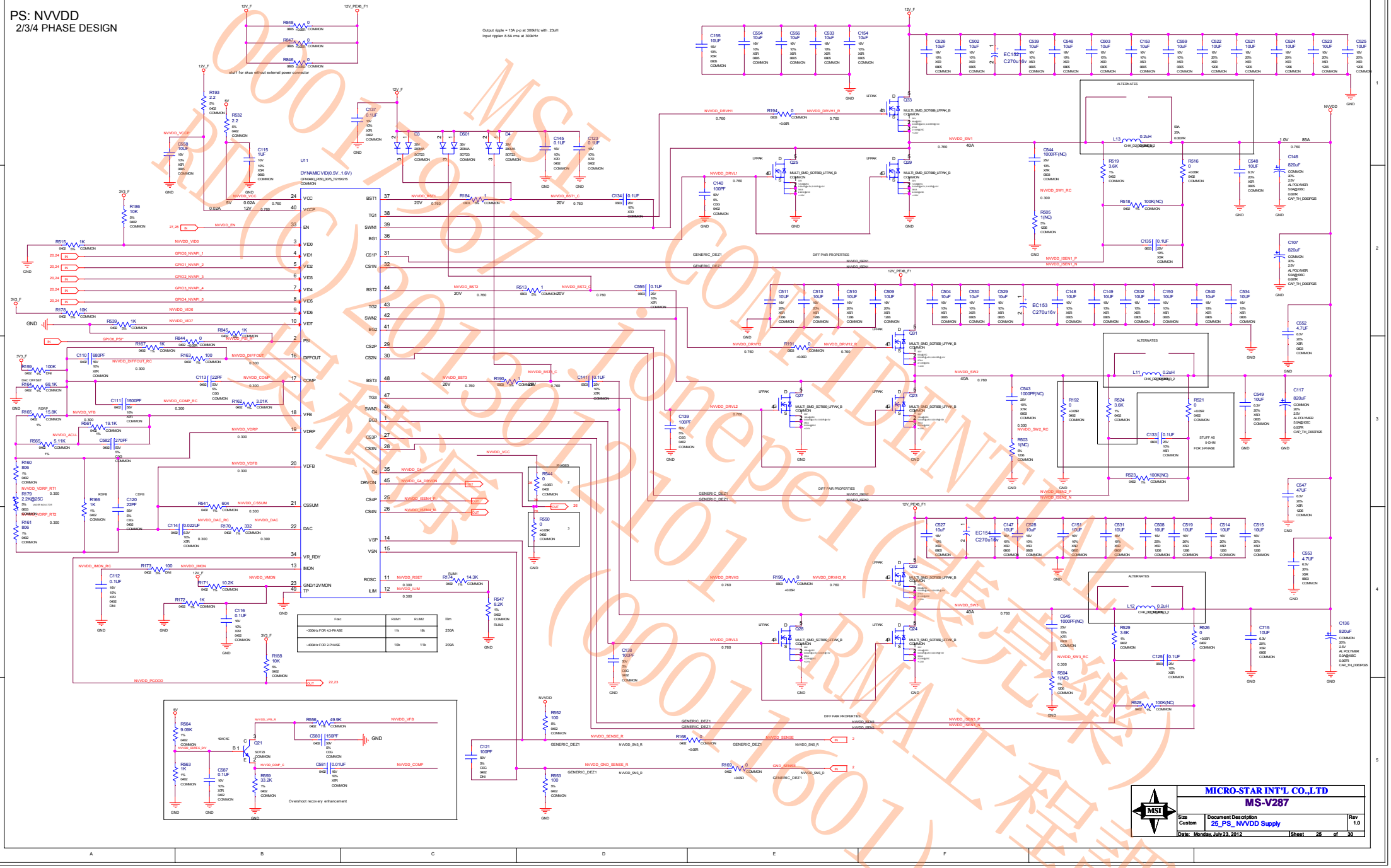
PS: NVVDD
2/3/4 PHASE DESIGN
Output ripple = 13A p-p at 300kHz with .23uH
Input ripple= 8.8A rms at 300kHz
stuff for skus without external power connector
U11
DYNAMIC VID(0.5V..1.6V)
GFN0462_P000_0075_T0210G15
VCC
VCCP
EN
VID0
VID1
VID2
VID3
VID4
VID5
VID6
VID7
PSI
DIFFOUT
COMP
VFB
VDRP
VDFB
CSSUM
DAC
VR_RDY
IMON
GND/12VMON
TP
BST1
TG1
SWN1
BG1
CS1P
CS1N
BST2
TG2
SWN2
BG2
CS2P
CS2N
BST3
TG3
SWN3
BG3
CS3P
CS3N
G4
DRVON
CS4P
CS4N
VSP
VSN
ROSC
ILIM
ALTERNATES
DIFF PAIR PROPERTIES
Overshoot recovery enhancement
MICRO-STAR INT'L CO.,LTD
MS-V287
Size
Custom
Document Description
25_PS_ NVVDD Supply
Rev
1.0
Date: Monday, July 23, 2012
Sheet 25 of 30

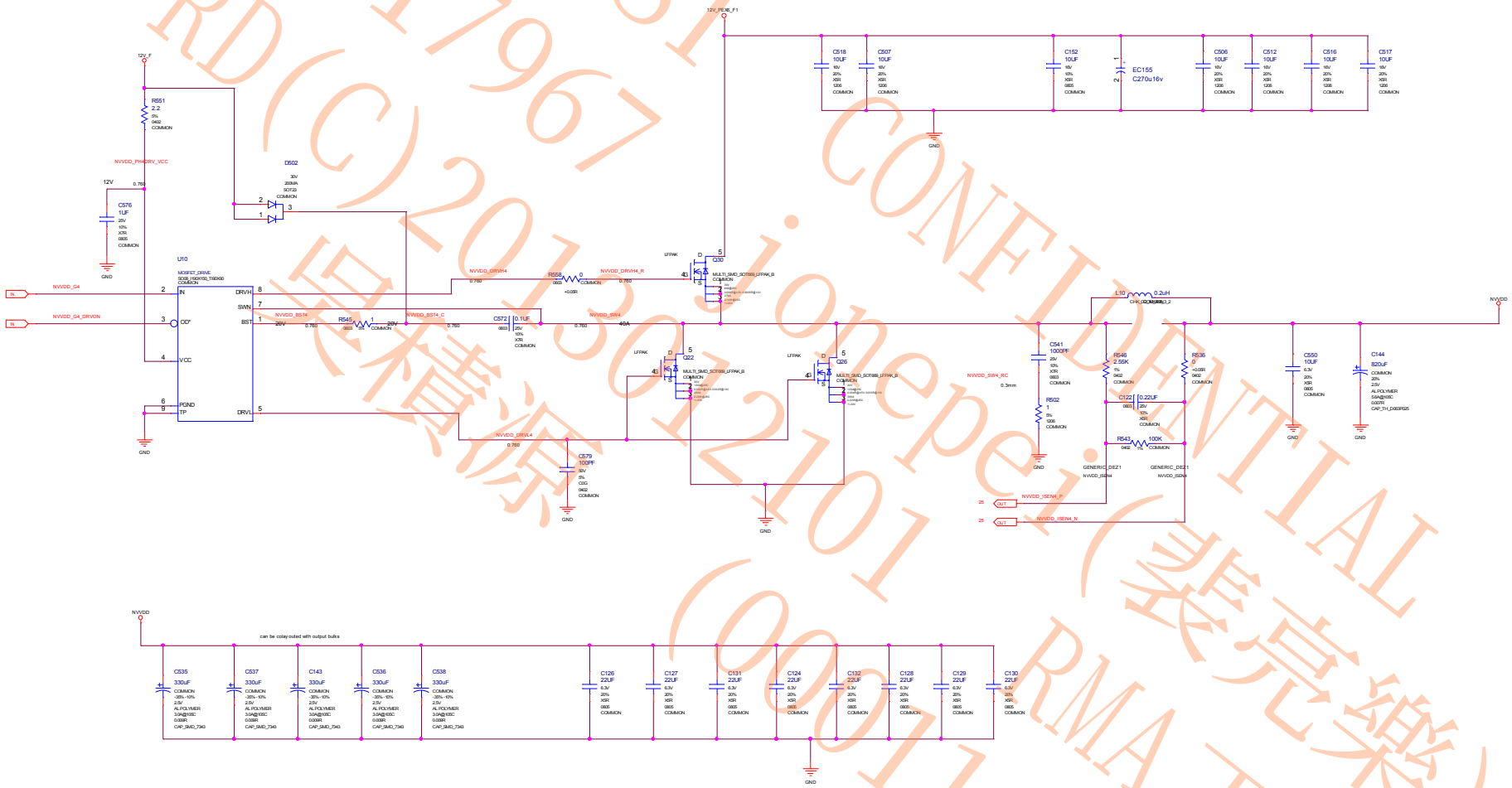

MICRO-STAR INT'L CO.,LTD		
MS-V287		
Size: Custom	Document Description: 26_PS_NVVDD Phase4	Rev: 1.0
Date: Friday, July 20, 2012	Sheet 26 of 30	

MSI CONFIDENTIAL
00017967
RD(C)20130121101
(00011601)
(裴亮樂)
RMA工程課

PS: Inputs, Filtering, and Monitoring

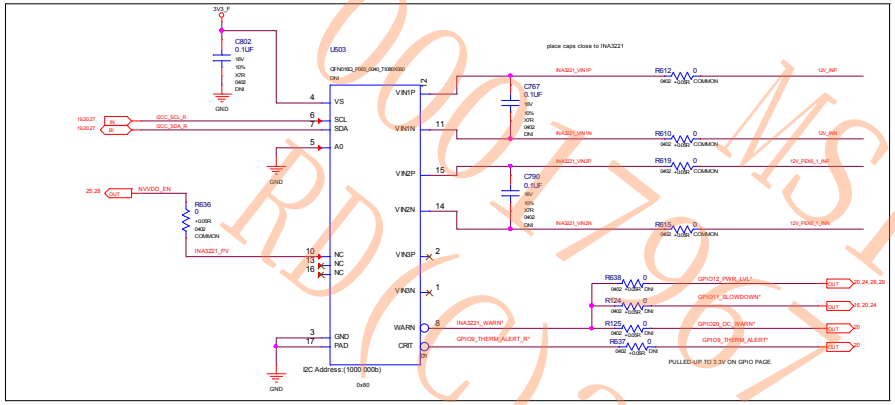

PEX 3V3 INPUT - 10W

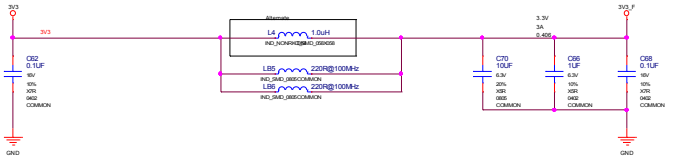

PEX_12V INPUT - 66W

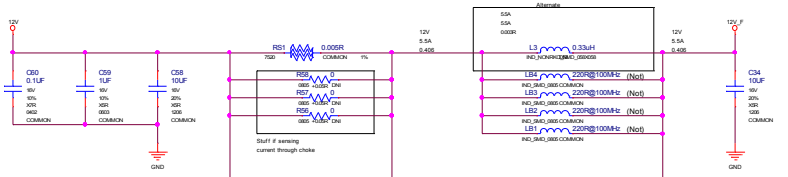

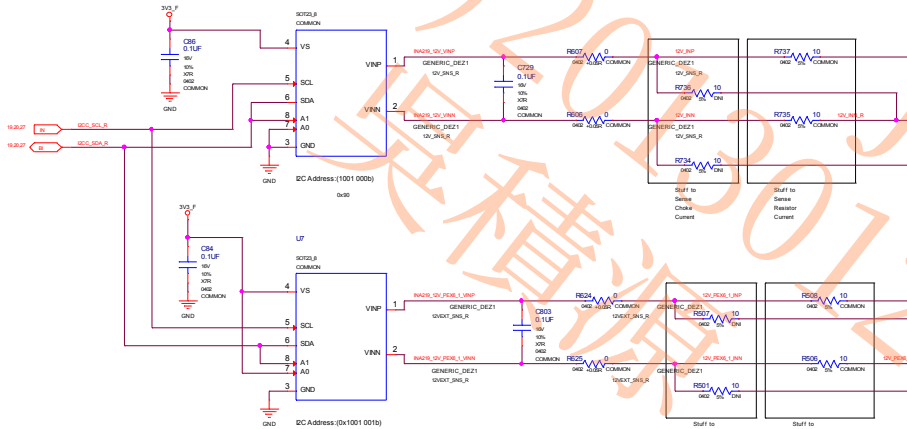

PEX6 INPUT 1 - 2x3 PCIE CON 75W

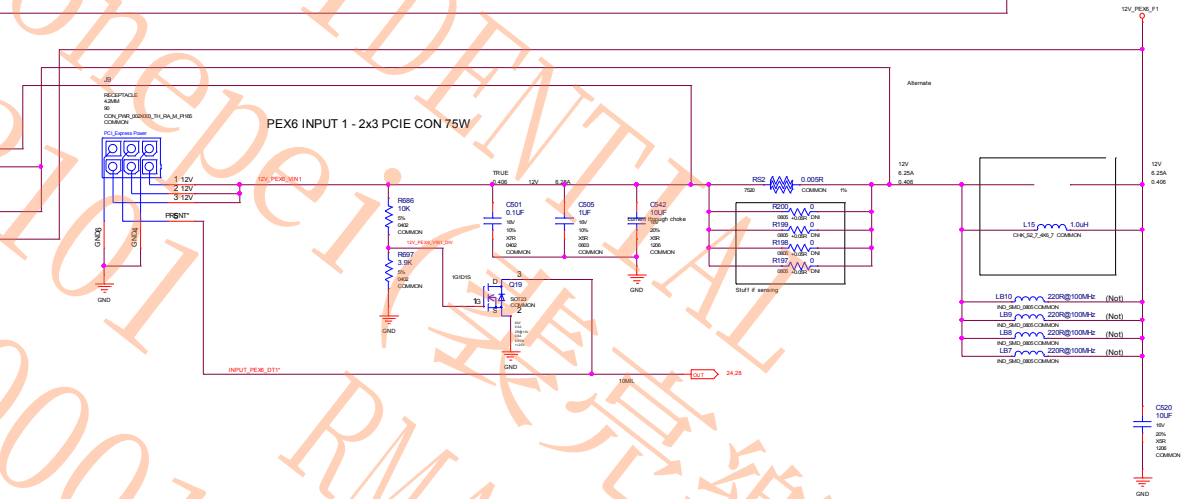

MSI CONFIDENTIAL
Joneper 2012/10/01
RDC 00178017
(00011601)
RMA工程樣
(完整版)

MICRO-STAR INT'L CO.,LTD		
MS-V287		
Size: Custom	Document Description: 27_PS_ Inputs, Filtering, and	Rev: 1.0
Date: Friday, July 20, 2012	Sheet 27 of 30	

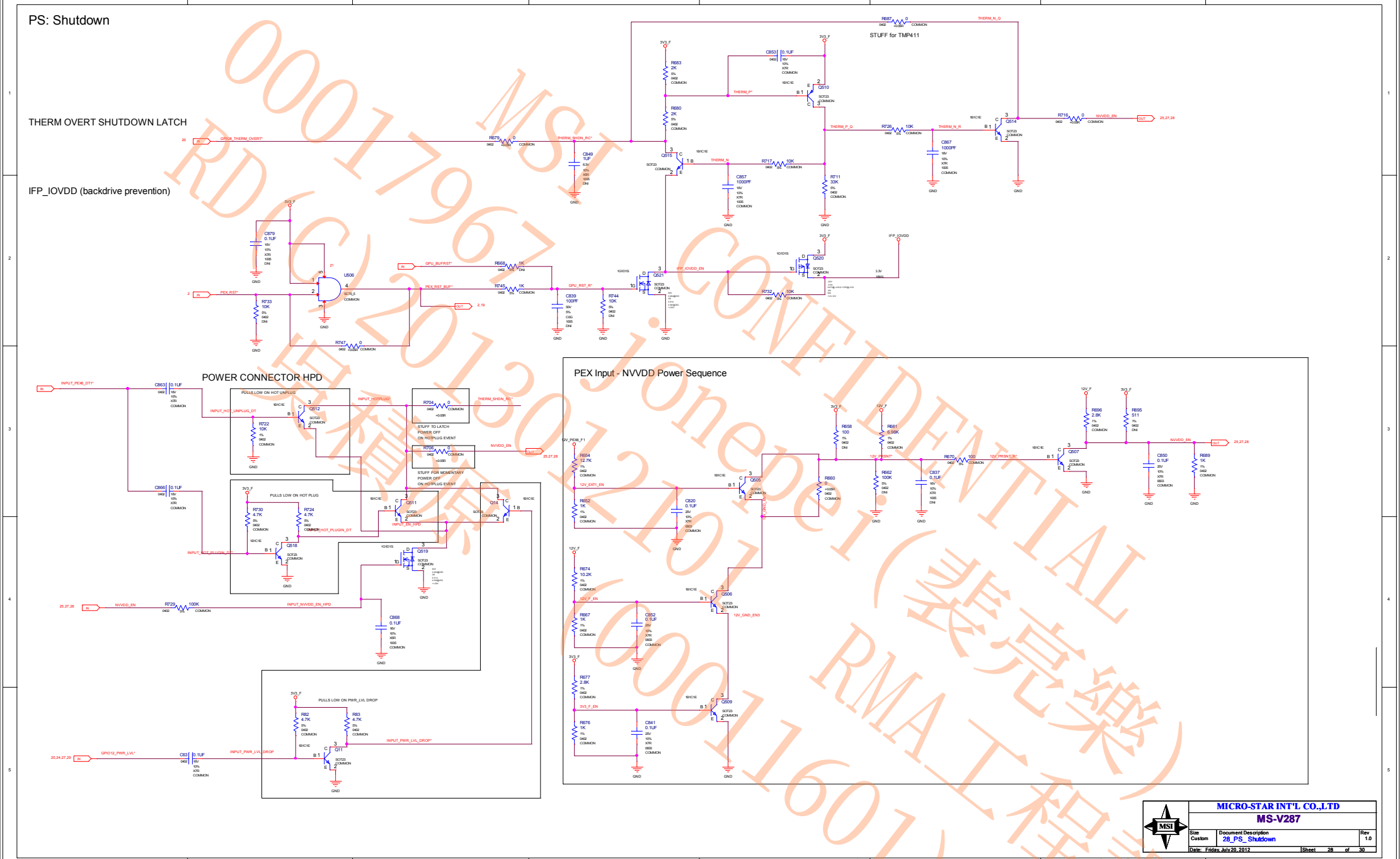

MSI CONFIDENTIAL
RD(C)2013012101 Jonepei(裴亮樂)
(RMA工程課)
(00011601)
0001796 7

PS: Board LED

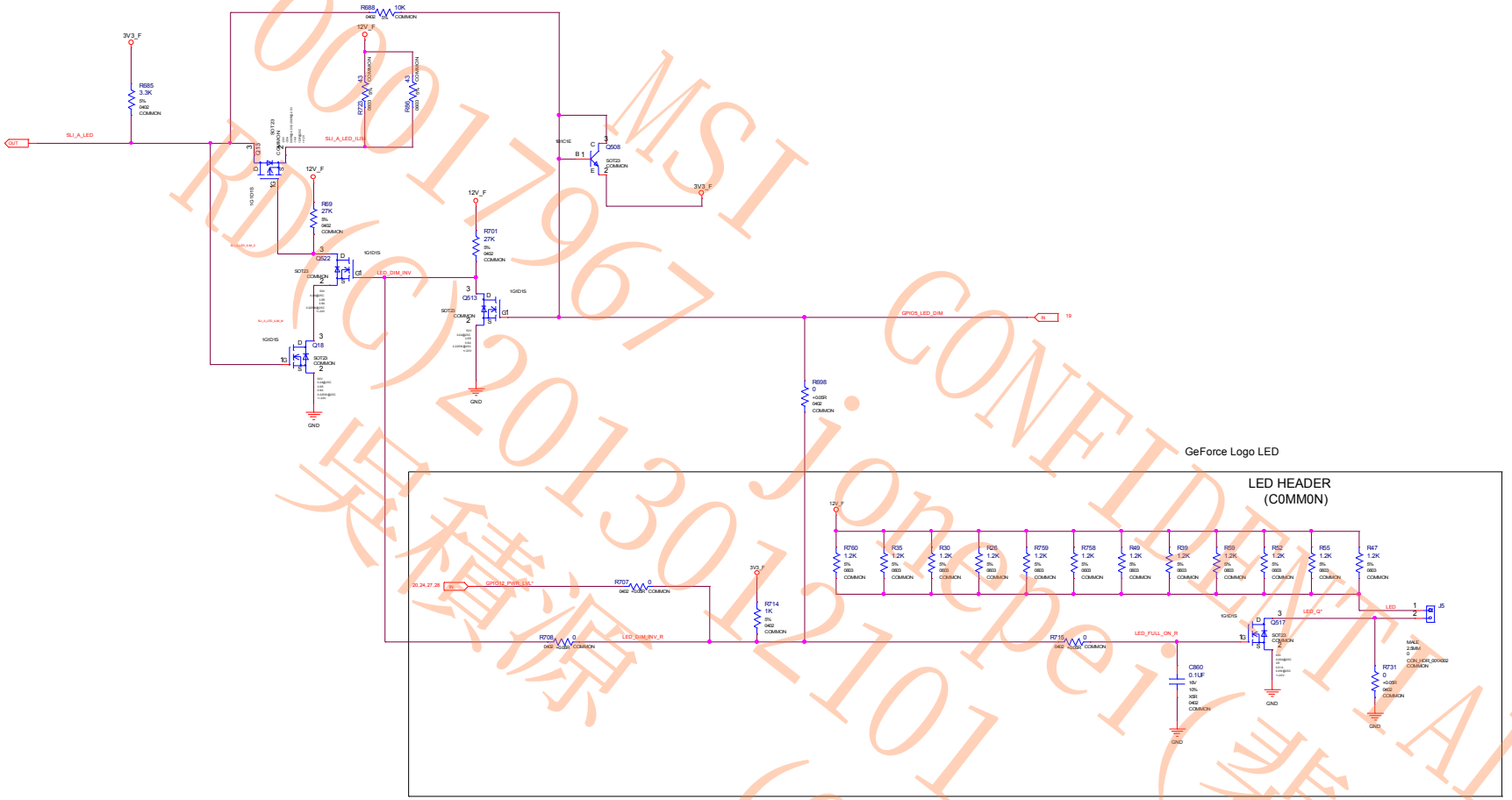

MICRO-STAR INT'L CO.,LTD		
MS-V287		
Size: Custom	Document Description: 29_PS_ Board LED; Lighted SLI	Rev: 1.0
Date: Friday, July 20, 2012	Sheet 29 of 30	

MSI CONFIDENTIAL
00017967 jonepei (裴亮樂)
RMA工程課
(00011601)
吳積源 (00011601)

Mechanical: Bracket/Thermal Solution

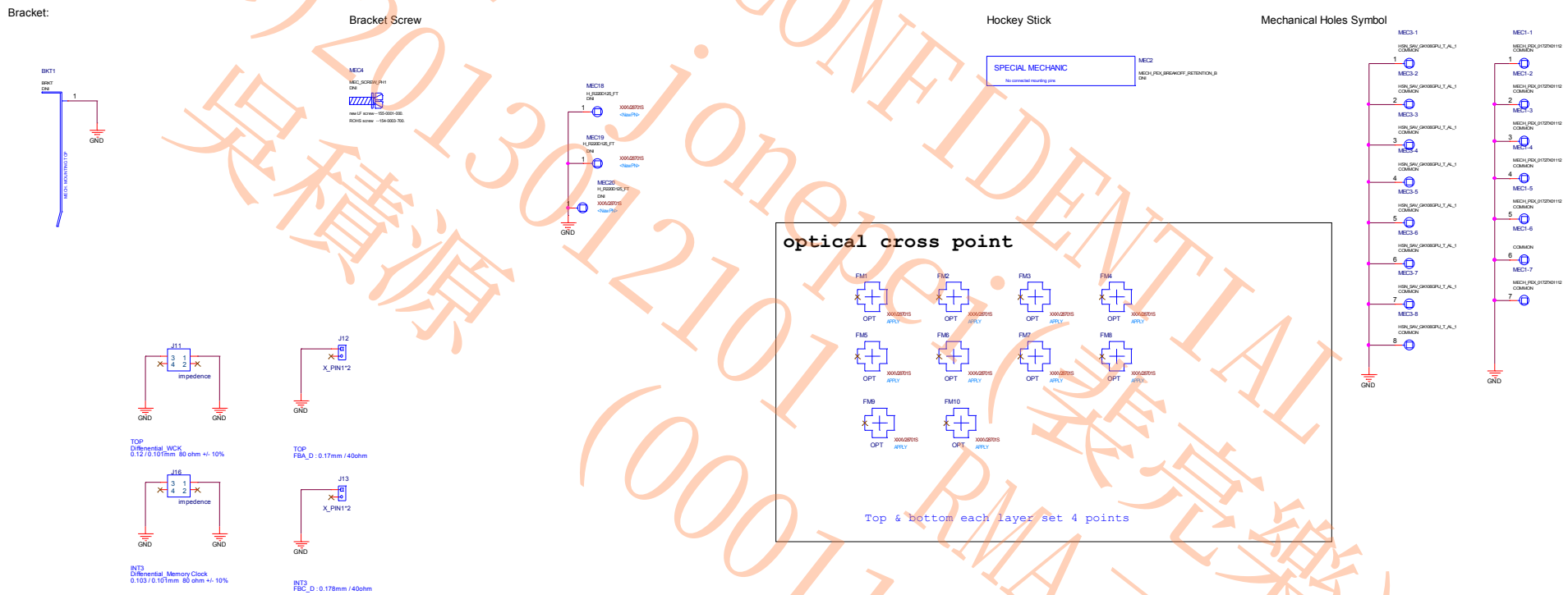

MICRO-STAR INT'L CO.,LTD		
MS-V287		
Size: Custom	Document Description: 30_MECH_ Bracket_Thermal	Rev: 1.0
Date: Friday, July 20, 2012	Sheet 30 of 30	

MSI CONFIDENTIAL
00017967 jonepe (裴亮樂)
RD(C)20130121 RMA工程課
吳積源 (00011601)