Title: Cref Part Report
Design: p626
Date: Oct 20 11:15:12 2009

BKT1 [15.2G]
C1 [10.2G]
C2 [8.5F]
C3 [8.4F]
C4 [8.4F]
C5 [9.4F]
C6 [19.4E]
C7 [9.4F]
C8 [9.5F]
C9 [10.4F]
C10 [19.3G]
C11 [11.4E]
C12 [11.2G]
C13 [17.3D]
C14 [11.4E]
C15 [11.4E]
C16 [11.3F]
C17 [9.4G]
C18 [19.3D]
C19 [19.3D]
C20 [11.4E]
C21 [8.3C]
C22 [11.2G]
C23 [11.4E]
C24 [19.2C]
C25 [10.4F]
C26 [11.4E]
C27 [19.2D]
C28 [11.4E]
C29 [11.4E]
C30 [19.2F]
C31 [19.3E]
C32 [17.3C]
C33 [18.2E]
C34 [19.2F]
C35 [19.2E]
C36 [18.2D]
C37 [18.2E]
C38 [18.2F]
C39 [19.1D]
C41 [19.2D]
C42 [18.3E]
C43 [18.3F]
C44 [18.3F]
C45 [18.3G]
C46 [18.2E]
C47 [19.2E]
C48 [19.2E]
C50 [19.3F]
C51 [19.2G]
C52 [18.3G]
C53 [19.2G]
C54 [18.2D]
C55 [18.3G]
C56 [18.3G]
C57 [14.2G]
C58 [19.1G]
C59 [19.3E]
C60 [18.3C]
C61 [19.2G]
C62 [18.4C]
C63 [2.1B]
C64 [18.2C]
C65 [14.2F]
C66 [2.1B]
C67 [20.3C]
C68 [2.1A]
C69 [2.1A]
C70 [20.3F]
C72 [20.3F]
C73 [20.3B]
C74 [18.3F]
C75 [7.3F]
C76 [7.3E]
C77 [19.2H]
C78 [19.2H]
C79 [15.5B]
C80 [15.5D]
C81 [20.3C]
C82 [20.3E]
C84 [15.2F]
C86 [10.4B]
C87 [14.3F]
C88 [7.4B]
C89 [3.1D]
C90 [6.5D]
C91 [3.1D]
C92 [7.3A]
C93 [7.2E]

C94 [14.4F]
C95 [2.2E]
C96 [2.2D]
C97 [14.3F]
C98 [7.4A]
C99 [7.2E]
C100 [7.3A]
C101 [7.3B]
C102 [10.3B]
C103 [15.4A]
C104 [3.5D]
C105 [8.4B]
C106 [2.4G]
C107 [11.4A]
C108 [2.2E]
C109 [2.2D]
C110 [7.3E]
C111 [7.3E]
C112 [7.2F]
C113 [7.2F]
C114 [7.4A]
C115 [2.1H]
C116 [2.2H]
C117 [10.2B]
C118 [11.4A]
C119 [15.4B]
C120 [3.5D]
C121 [2.4G]
C122 [7.3A]
C123 [11.4A]
C124 [7.4A]
C125 [15.4B]
C126 [11.4A]
C127 [3.5D]
C128 [7.2E]
C129 [7.3E]
C130 [7.2E]
C131 [7.2F]
C132 [7.2F]
C133 [7.3E]
C134 [7.2F]
C135 [10.2B]
C136 [10.2B]
C137 [2.2G]
C138 [9.4B]
C139 [10.3B]
C140 [6.3B]
C141 [2.2E]
C142 [2.2D]
C143 [2.4G]
C144 [2.1G]
C145 [2.3G]
C146 [8.4B]
C147 [2.4G]
C148 [9.4B]
C149 [7.2E]
C150 [7.3F]
C151 [7.2E]
C152 [7.2E]
C153 [7.2E]
C154 [7.2E]
C155 [7.3E]
C156 [13.3C]
C157 [11.4A]
C158 [11.4A]
C159 [3.5D]
C160 [10.3B]
C161 [2.2G]
C162 [7.4B]
C163 [2.1G]
C164 [2.2G]
C165 [7.3B]
C166 [2.3E]
C167 [2.3D]
C168 [7.4C]
C169 [2.1G]
C170 [2.2H]
C171 [2.2G]
C172 [2.1G]
C173 [7.3B]
C174 [8.4B]
C175 [2.1H]
C176 [7.3B]
C177 [2.3E]
C178 [2.3D]
C179 [7.4B]
C180 [7.4B]
C181 [7.3C]
C182 [3.1D]
C183 [7.4B]
C184 [2.3E]
C185 [2.3D]
C186 [6.5E]
C187 [2.3E]
C188 [2.3D]
C189 [3.1D]

C190 [7.4A]
C191 [7.4C]
C192 [2.3E]
C193 [3.1D]
C194 [2.3D]
C195 [2.4E]
C196 [7.4A]
C197 [7.5B]
C198 [2.4D]
C199 [2.4E]
C200 [2.4G]
C201 [7.5A]
C202 [7.5A]
C203 [7.5A]
C204 [2.4E]
C205 [7.4A]
C206 [2.4D]
C207 [2.4E]
C208 [6.3F]
C209 [2.4D]
C210 [7.5B]
C211 [7.4B]
C212 [2.4E]
C213 [3.1D]
C214 [2.4D]
C215 [7.5B]
C216 [7.4B]
C217 [7.4B]
C218 [7.5C]
C219 [2.5D]
C220 [2.5E]
C221 [3.1D]
C222 [7.3B]
C223 [7.5B]
C224 [7.4C]
C225 [6.5G]
C226 [7.4C]
C227 [3.1D]
C228 [2.5E]
C229 [6.5D]
C230 [2.5D]
C231 [5.5E]
C232 [7.1A]
C233 [7.2A]
C234 [7.1B]
C235 [7.1B]
C236 [7.2A]
C237 [7.2A]
C238 [7.2B]
C239 [7.2B]
C240 [2.5E]
C241 [2.5D]
C242 [7.3B]
C243 [7.1A]
C244 [5.5G]
C245 [5.5D]
C246 [7.1B]
C247 [7.1B]
C248 [7.3B]
C249 [5.3B]
C250 [5.3F]
C251 [7.3A]
C252 [7.2A]
C253 [7.3A]
C254 [7.2C]
C255 [7.2A]
C256 [7.2B]
C257 [7.1A]
C258 [7.3A]
C259 [7.3B]
C260 [7.2A]
C261 [7.2B]
C262 [7.2B]
C263 [7.1C]
C264 [5.5D]
C265 [7.2B]
C266 [7.2B]
C267 [7.2C]
C268 [7.2B]
C269 [7.3C]
C1055 [18.3H]
CN1 [2.3C]
D1 [10.4E]
D2 [11.2E]
D3 [11.3E]
D4 [11.3E]
D5 [19.3D]
D6 [19.1D]
D7 [14.1E]
D8 [18.2D]
D9 [14.2F]
F1 [17.3C]
G1 [2.3F]
G1 [3.3C]
G1 [4.3C]
G1 [7.3G 7.3D]

G1 [8.4C]
G1 [9.4C]
G1 [10.3C]
G1 [11.4B]
G1 [12.4E 12.4B]
G1 [13.2D 13.4D]
G1 [14.2C]
G1 [15.4C 15.2C]
J1 [11.4G]
J2 [10.3H]
J3 [9.4H]
J4 [14.2G]
J5 [14.2H]
L1 [9.4F]
L2 [9.4F]
L3 [8.5F]
L4 [8.4F]
L5 [8.4F]
L6 [9.5F]
L7 [18.2F]
L8 [18.3F]
L9 [19.2G]
L10 [14.2G]
L11 [19.2G]
LB1 [10.4F]
LB2 [11.2F]
LB3 [10.3A]
LB4 [15.4A]
LB5 [3.5E]
LB6 [8.3A]
LB7 [2.4G]
LB8 [11.4A]
LB9 [11.4A]
LB10 [10.2A]
M1 [6.4D 6.2D 6.4B]
M2 [6.4D 6.2B 6.4B]
M3 [6.4F 6.4H 6.2F]
M4 [6.4H 6.4F 6.2G]
M5 [5.4D 5.3D 5.4B]
M6 [5.3B 5.4D 5.4B]
M7 [5.3G 5.4H 5.4F]
M8 [5.3F 5.4F 5.4H]
MEC1 [15.2G]
MEC2 [15.2G]
MEC3 [15.2G]
MEC4 [15.2G]
MEC5 [15.2H]
Q1 [19.4E]
Q2 [19.3A]
Q3 [11.1B]
Q4 [19.3B]
Q5 [11.2D]
Q6 [11.3D]
Q7 [18.2E 18.3E]
Q8 [19.2F]
Q9 [14.3F]
Q10 [19.2F]
Q11 [19.2E]
Q12 [10.4C]
Q13 [18.4B]
Q14 [18.4B]
Q15 [10.4B]
Q16 [14.4G]
Q17 [14.4E]
Q18 [14.4F]
R1 [9.2F]
R2 [9.2E]
R3 [9.2F]
R4 [9.2E]
R5 [9.3F]
R6 [9.3F]
R7 [19.4E]
R8 [19.4D]
R9 [19.3A]
R10 [9.4E]
R11 [8.2F]
R12 [19.4D]
R13 [19.3H]
R14 [8.2F]
R15 [9.4E]
R16 [8.2E]
R17 [19.3F]
R18 [19.3G]
R19 [8.2E]
R20 [19.3A]
R21 [9.5E]
R22 [19.3B]
R23 [19.3F]

R24 [11.1B]
R25 [10.4E]
R26 [19.4E]
R27 [19.4F]
R28 [19.3D]
R29 [11.2H]
R30 [11.2G]
R31 [8.3F]
R32 [8.5E]
R33 [8.4E]
R34 [8.4E]
R35 [8.3F]
R36 [19.3E]
R37 [11.1C]
R38 [10.4E]
R39 [11.1B]
R40 [11.1B]
R41 [11.2D]
R42 [11.2C]
R43 [19.3E]
R44 [19.3A]
R45 [11.1C]
R46 [11.2E]
R47 [11.3D]
R48 [11.1B]
R49 [19.2C]
R50 [11.3E]
R51 [11.3C]
R52 [11.1C]
R53 [9.3E]
R54 [11.1B]
R55 [9.3D]
R56 [9.2D]
R57 [11.1C]
R58 [9.3E]
R59 [8.3D]
R60 [8.2D]
R61 [19.2E]
R62 [14.1F]
R63 [14.2F]
R64 [14.1F]
R65 [8.3E]
R66 [8.3E]
R67 [18.2D]
R68 [19.3G]
R69 [18.3F]
R70 [14.2G]
R71 [14.2G]
R72 [18.4E]
R73 [18.3D]
R74 [18.3E]
R75 [18.3F]
R76 [18.4E]
R77 [18.4F]
R78 [18.2C]
R79 [18.3G]
R80 [18.3B]
R81 [18.4A]
R82 [18.3B]
R83 [20.3D]
R84 [20.3E]
R85 [10.4C]
R86 [10.4C]
R87 [9.2D]
R88 [8.2D]
R89 [10.4B]
R90 [14.4G]
R91 [14.4G]
R92 [6.5D]
R93 [6.5C]
R94 [6.5C]
R95 [6.5C]
R96 [15.3B]
R97 [16.3C]
R98 [16.4C]
R99 [16.4C]
R100 [14.4F]
R101 [9.2D]
R102 [8.2D]
R103 [14.4F]
R104 [15.3B]
R105 [16.3B]
R106 [16.4B]
R107 [16.4B]
R108 [14.3E]
R109 [14.3D]
R110 [14.4F]
R111 [16.3B]
R112 [14.1E]
R113 [14.1D]
R114 [16.3B]
R115 [15.2E]
R116 [16.3C]
R117 [4.5D]
R118 [4.5D]
R119 [4.5D]

R120 [16.3C]
R121 [15.5B]
R122 [16.2C]
R123 [6.3C]
R124 [15.5D]
R125 [16.2B]
R126 [13.4E]
R127 [9.4B]
R128 [9.5D]
R129 [9.4D]
R130 [11.4B]
R131 [9.4D]
R132 [10.3B]
R133 [6.3C]
R134 [14.2B]
R135 [2.5G]
R136 [8.4B]
R137 [8.5D]
R138 [8.4D]
R139 [8.4D]
R140 [4.3F]
R141 [4.3H]
R142 [4.3G]
R143 [4.3G]
R144 [6.3F]
R145 [6.3F]
R146 [2.5G]
R147 [6.5F]
R148 [6.5G]
R149 [6.5F]
R150 [6.5F]
R151 [5.5F]
R152 [5.5C]
R153 [5.5F]
R154 [5.5C]
R155 [5.5C]
R156 [5.5F]
R157 [5.5D]
R158 [5.5G]
R159 [3.3H]
R160 [3.3F]
R161 [5.3C]
R162 [3.3G]
R163 [3.3G]
R164 [5.3F]
R165 [5.3C]
R166 [5.3F]
TP6 [4.4D]
TP7 [3.4D]
TP501 [14.2B]
TP502 [14.2B]
TP503 [14.2B]
TP504 [14.2B]
TP505 [14.2B]
U1 [19.2D]
U2 [17.2D]
U3 [17.3D]
U4 [8.3D 8.3D]
U4 [9.3D 9.3D]
U5 [18.3C]
U6 [20.3D]
U7 [15.2F]
U8 [14.3E]
Y1 [15.5C]

MSI-RMA工程課 資料禁 20100622

ASSEMBLY	BASE LEVEL GENERIC SCHEMATIC ONLY, COMMON & NO_STUFF ASSEMBLY NOTES AND BOM NOT FINAL
PAGE DETAIL	<edit here to insert page detail>

ALL NVIDIA DESIGN SPECIFICATIONS, REFERENCE SPECIFICATIONS, REFERENCE BOARDS, FILES, DRAWINGS, DIAGNOSTICS, LISTS AND OTHER DOCUMENTS OR INFORMATION (TOGETHER AND SEPARATELY, 'MATERIALS') ARE BEING PROVIDED 'AS IS'. THE MATERIALS MAY CONTAIN KNOWN AND UNKNOWN VIOLATIONS OR DEVIATIONS OF INDUSTRY STANDARDS AND SPECIFICATIONS. NVIDIA MAKES NO WARRANTIES, EXPRESSED, IMPLIED, STATUTORY OR OTHERWISE WITH RESPECT TO THE MATERIALS OR OTHERWISE, AND EXPRESSLY DISCLAIMS ALL IMPLIED WARRANTIES INCLUDING, WITHOUT LIMITATION, THE WARRANTIES OF DESIGN, OF NONINFRINGEMENT, MERCHANTABILITY OR FITNESS FOR A PARTICULAR PURPOSE, OR ARISING FROM A COURSE OF DEALING, TRADE USAGE, TRADE PRACTICE, OR INDUSTRY STANDARDS.

NVIDIA CORPORATION
2701 SAN TOMAS EXPRESSWAY
SANTA CLARA, CA 95050, USA

NV_PN	600-10626-BASE-100 B		
ID		PAGE	
NAME	<ENGINEER>	DATE	23-OCT-2009

SNN_GND_SENSE_3 2.4F
SNN_GPIO1 12.4C
SNN_GPIO2 14.2D
SNN_GPIO3 14.2D
SNN_GPIO6 14.2D
SNN_GPIO7 14.2D
SNN_GPIO10 14.2D
SNN_GPIO11 14.2D
SNN_GPIO12 14.2D
SNN_GPIO13 14.2D
SNN_GPIO14 14.2D
SNN_GPIO16 14.2D
SNN_GPIO17 14.2D
SNN_GPIO18 14.2D
SNN_GPIO19 12.4F
SNN_GPIO20 14.2D
SNN_GPIO21 11.5C
SNN_GPIO22 14.2D
SNN_GPIO23 14.2D
SNN_GPU_NC1 2.2F
SNN_GPU_NC2 2.2F
SNN_GPU_NC3 2.2F
SNN_GPU_NC4 2.2F
SNN_GPU_NC5 2.2F
SNN_GPU_NC6 2.3F
SNN_GPU_NC7 2.3F
SNN_GPU_NC8 2.3F
SNN_GPU_NC9 2.3F
SNN_GPU_NC10 2.3F
SNN_GPU_NC11 2.3F
SNN_GPU_NC14 2.3F
SNN_GPU_NC16 2.3F
SNN_GPU_NC17 2.3F
SNN_GPU_NC18 2.3F
SNN_HDA_BCLK 15.2B
SNN_HDA_RST* 15.2B
SNN_HDA_SDI 15.2B
SNN_HDA_SDO 15.2B
SNN_HDA_SYNC 15.2B
SNN_HDMI_CEC 11.4F
SNN_HDMI_RESERVED 11.4F
SNN_I2CD_SCL 14.1D
SNN_I2CD_SDA 14.1D
SNN_I2CE_SCL 14.1D
SNN_I2CE_SDA 14.1D
SNN_I2CH_SCL 15.2D
SNN_I2CH_SDA 15.2D
SNN_I2CS_SCL 14.1D
SNN_I2CS_SDA 14.1D
SNN_IFPAB_TXC 10.3D
SNN_IFPAB_TXC* 10.3D
SNN_IFPAB_TXD3 10.2D
SNN_IFPAB_TXD3* 10.2D
SNN_IFPAB_TXD7 10.3D
SNN_IFPAB_TXD7* 10.3D
SNN_IFPC_AUX 12.4C
SNN_IFPC_AUX* 12.4C
SNN_IFPC_L0 12.4C
SNN_IFPC_L0* 12.4C
SNN_IFPC_L1 12.4C
SNN_IFPC_L1* 12.4C
SNN_IFPC_L2 12.4C
SNN_IFPC_L2* 12.4C
SNN_IFPC_L3 12.4C
SNN_IFPC_L3* 12.4C
SNN_IFPC_RSET 12.3A
SNN_IFPD_AUX 12.4F
SNN_IFPD_AUX* 12.3F
SNN_IFPD_L0 12.4F
SNN_IFPD_L0* 12.4F
SNN_IFPD_L1 12.4F
SNN_IFPD_L1* 12.4F
SNN_IFPD_L2 12.4F
SNN_IFPD_L2* 12.4F
SNN_IFPD_L3 12.4F
SNN_IFPD_L3* 12.4F
SNN_IFPD_RSET 12.3E
SNN_IFPF_AUX 11.4C
SNN_IFPF_AUX* 11.4C
SNN_IFPF_L0 11.5C
SNN_IFPF_L0* 11.5C
SNN_IFPF_L1 11.5C
SNN_IFPF_L1* 11.5C
SNN_IFPF_L2 11.5C
SNN_IFPF_L2* 11.5C
SNN_IFPF_L3 11.5C
SNN_IFPF_L3* 11.4C
SNN_J25 15.2B
SNN_J26 15.2B
SNN_MIOA_CAL_PD_VD 13.2C
DQ
SNN_MIOA_CAL_PU_GN 13.2C
D
SNN_MIOA_CLKIN 13.3E
SNN_MIOA_CLKOUT 13.3E
SNN_MIOA_CLKOUT* 13.3E

SNN_MIOA_CTL3 13.2E
SNN_MIOA_D0 13.2E
SNN_MIOA_D1 13.2E
SNN_MIOA_D2 13.2E
SNN_MIOA_D3 13.2E
SNN_MIOA_D4 13.2E
SNN_MIOA_D5 13.2E
SNN_MIOA_D6 13.2E
SNN_MIOA_D7 13.2E
SNN_MIOA_D8 13.2E
SNN_MIOA_D9 13.2E
SNN_MIOA_D10 13.2E
SNN_MIOA_D11 13.2E
SNN_MIOA_D12 13.2E
SNN_MIOA_D13 13.2E
SNN_MIOA_D14 13.2E
SNN_MIOA_DE 13.2E
SNN_MIOA_HSYNC 13.2E
SNN_MIOA_VREF 13.2C
SNN_MIOA_VSYNC 13.2E
SNN_MIOB_CAL_PD_VD 13.4C
DQ
SNN_MIOB_CAL_PU_GN 13.4C
D
SNN_MIOB_CLKOUT 13.4E
SNN_MIOB_CLKOUT* 13.4E
SNN_MIOB_D12 13.4E
SNN_MIOB_D13 13.4E
SNN_MIOB_D14 13.4E
SNN_MIOB_D<0> 13.3E
SNN_MIOB_D<1> 13.3E
SNN_MIOB_D<2> 13.3E
SNN_MIOB_D<3> 13.3E
SNN_MIOB_D<4> 13.3E
SNN_MIOB_D<5> 13.3E
SNN_MIOB_D<6> 13.3E
SNN_MIOB_D<7> 13.3E
SNN_MIOB_D<8> 13.3E
SNN_MIOB_D<9> 13.3E
SNN_MIOB_D<10> 13.3E
SNN_MIOB_D<11> 13.4E
SNN_MIOB_D<12> 13.4E
SNN_MIOB_D<13> 13.4E
SNN_MIOB_D<14> 13.4E
SNN_MIOB_DE 13.4E
SNN_MIOB_VREF 13.4C
SNN_NVVDD_LG_D 19.3D
SNN_PEXVDD_NC 20.3D
SNN_PEXVDD_PGOOD 20.3C
SNN_PEX_CLKREQ* 2.1E
SNN_PEX_PLL_CLK_OU 2.2E
T
SNN_PEX_PLL_CLK_OU 2.2E
T*
SNN_PEX_RFU 2.5F
SNN_PGOOD_OUT* 15.3D
SNN_RFU_1 4.5D
SNN_RFU_2 4.5D
SNN_SPDIF 15.2D
SNN_THERM_DA 14.1C
SNN_THERM_DC 14.1C
SNN_VDD_SENSE_1 2.4F
SNN_VDD_SENSE_3 2.4F
STRAP0 13.4F< 16.4B> 16.4C
STRAP1 13.4F< 16.4B> 16.4C
STRAP2 13.4F< 16.3B> 16.3C
STRAP_REF0 15.3B
STRAP_REF1 15.3B
THERM_N 14.4F
THERM_N_R 14.4E> 18.3A<
THERM_P* 14.4F
THERM_P_Q 14.4F
THERM_SHUTDOWN* 14.4E> 19.3B<
XTAL_IN 15.1G< 15.5C
XTAL_OUT 15.1G< 15.5C
XTAL_OUTBUFF 15.1G< 15.4D
XTAL_SSIN 15.1G< 15.4B

MSIS-RMA工程課
夏舒萍
20100622

ASSEMBLY	BASE LEVEL GENERIC SCHEMATIC ONLY, COMMON & NO_STUFF ASSEMBLY NOTES AND BOM NOT FINAL
PAGE DETAIL	<edit here to insert page detail>

ALL NVIDIA DESIGN SPECIFICATIONS, REFERENCE SPECIFICATIONS, REFERENCE BOARDS, FILES, DRAWINGS, DIAGNOSTICS, LISTS AND OTHER DOCUMENTS OR INFORMATION (TOGETHER AND SEPARATELY, 'MATERIALS') ARE BEING PROVIDED 'AS IS'. THE MATERIALS MAY CONTAIN KNOWN AND UNKNOWN VIOLATIONS OR DEVIATIONS OF INDUSTRY STANDARDS AND SPECIFICATIONS. NVIDIA MAKES NO WARRANTIES, EXPRESSED, IMPLIED, STATUTORY OR OTHERWISE WITH RESPECT TO THE MATERIALS OR OTHERWISE, AND EXPRESSLY DISCLAIMS ALL IMPLIED WARRANTIES INCLUDING, WITHOUT LIMITATION, THE WARRANTIES OF DESIGN, OF NONINFRINGEMENT, MERCHANTABILITY OR FITNESS FOR A PARTICULAR PURPOSE, OR ARISING FROM A COURSE OF DEALING, TRADE USAGE, TRADE PRACTICE, OR INDUSTRY STANDARDS.

NVIDIA CORPORATION
2701 SAN TOMAS EXPRESSWAY
SANTA CLARA, CA 95050, USA

NV_PN	600-10626-BASE-100 B		
ID		PAGE	
NAME	<ENGINEER>	DATE	23-OCT-2009

Title: Basenet Report
Design: p626
Date: Oct 20 11:15:12 2009

Base nets and synonyms for
p626_lib.f926(@p626_lib.p626(sch_1))
Base Signal Location([Zone][dir])

5V 17.1G
12V_PEX 17.1G
12V_PEX_F 17.2C
DACA_BLUE 8.1G< 8.5D
DACA_BLUE_C 8.5G> 10.2G< 10.3G<
DACA_GREEN 8.1G< 8.4D
DACA_GREEN_C 8.4G> 10.2G< 10.3G<
DACA_HSYNC 8.1G< 8.4C
DACA_HS_BUF 8.1G< 8.3D
DACA_HS_BUF_R 8.1G< 8.3E
DACA_HS_C 8.3G> 10.2G< 10.3G<
DACA_RED 8.1G< 8.4D
DACA_RED_C 8.4G> 10.2G< 10.3G<
DACA_RSET 8.1G< 8.4B
DACA_VDD 8.1G<
DACA_VREF 8.1G< 8.4B
DACA_VSYNC 8.1G< 8.4C
DACA_VS_BUF 8.1G< 8.3D
DACA_VS_BUF_R 8.1G< 8.3E
DACA_VS_C 8.3G> 10.2G< 10.3G<
DACB_BLUE 9.1G< 9.5D
DACB_BLUE_C 9.1G< 9.4G
DACB_GREEN 9.1G< 9.4D
DACB_GREEN_C 9.1G< 9.4G
DACB_HSYNC 9.1G< 9.4C
DACB_HS_BUF 9.1G< 9.3D
DACB_HS_BUF_R 9.1G< 9.3E
DACB_HS_C 9.1G< 9.3G
DACB_RED 9.1G< 9.4D
DACB_RED_C 9.1G< 9.4G
DACB_RSET 9.1G< 9.4B
DACB_VDD 9.2G<
DACB_VREF 9.1G< 9.4B
DACB_VSYNC 9.1G< 9.4C
DACB_VS_BUF 9.1G< 9.3D
DACB_VS_BUF_R 9.1G< 9.3E
DACB_VS_C 9.1G< 9.3G
DAC_VDD 8.3B> 9.3A<
FBAC_PLLAVDD 4.1G<
FBA_CLK0 3.1G> 3.4D> 5.3A< 5.3C< 5.5B<
FBA_CLK0* 3.1G> 3.4D> 5.3A< 5.3C< 5.5B<
FBA_CLK1 3.1G> 3.4D> 5.3E< 5.3F< 5.5F<
FBA_CLK1* 3.1G> 3.4D> 5.3E< 5.3F< 5.5F<
FBA_CLK_C0 5.5C
FBA_CLK_C1 5.5G
FBA_CMD<0> 3.3D 3.3F 5.3A 5.3C
FBA_CMD<25..0> 3.1G<> 3.3D> 5.1C< 5.2A<>
FBA_CMD<1> 3.3D 5.2A 5.2C 5.2E 5.2G
FBA_CMD<2> 3.3D 5.2A 5.2C
FBA_CMD<3> 3.3D 5.2A 5.2C 5.2E 5.2G
FBA_CMD<4> 3.3D 5.2A 5.2C 5.2E 5.2G
FBA_CMD<5> 3.3D 5.2A 5.2C 5.2E 5.2G
FBA_CMD<6> 3.3D 5.2A 5.2C 5.2E 5.2G
FBA_CMD<7> 3.3D 5.2A 5.2C 5.2E 5.2G
FBA_CMD<8> 3.3D 5.4G
FBA_CMD<9> 3.3B 5.4B
FBA_DQM<7..0> 3.1G> 3.3A> 5.1C< 5.4A<
FBA_DQM<1> 3.3B 5.4B
FBA_DQM<2> 3.3B 5.4C
FBA_DQM<3> 3.3B 5.4C
FBA_DQM<4> 3.3B 5.4E
FBA_DQM<5> 3.3B 5.4E
FBA_DQM<6> 3.3B 5.4G
FBA_DQM<7> 3.3B 5.4G
FBA_DQS0 3.4B<> 5.1F<> 5.4B<>
FBA_DQS0* 3.4B<> 5.1F<> 5.4B<>
FBA_DQS1 3.4B<> 5.1F<> 5.4B<>
FBA_DQS1* 3.4B<> 5.1F<> 5.4B<>
FBA_DQS2 3.4B<> 5.1F<> 5.4C<>
FBA_DQS2* 3.4B<> 5.1F<> 5.4C<>
FBA_DQS3 3.4B<> 5.1F<> 5.4C<>
FBA_DQS3* 3.4B<> 5.1F<> 5.4C<>
FBA_DQS4 3.4B<> 5.1F<> 5.4E<>
FBA_DQS4* 3.4B<> 5.1F<> 5.4E<>
FBA_DQS5 3.4B<> 5.1F<> 5.4E<>
FBA_DQS5* 3.4B<> 5.1F<> 5.4E<>
FBA_DQS6 3.4B<> 5.1F<> 5.4G<>
FBA_DQS6* 3.4B<> 5.1F<> 5.4G<>
FBA_DQS7 3.4B<> 5.1F<> 5.4G<>
FBA_DQS7* 3.4B<> 5.1F<> 5.4G<>
FBA_CLK0 4.1G> 4.4D> 6.3A< 6.3C< 6.5B<
FBA_CLK0* 4.1G> 4.4D> 6.3A< 6.3C< 6.5B<
FBA_CLK1 4.1G> 4.4D> 6.3E< 6.3F< 6.5E<
FBA_CLK1* 4.1G> 4.4D> 6.3E< 6.3F< 6.5E<
FBA_CLK_C0 6.5D
FBA_CLK_C1 6.5G
FBA_CMD<0> 4.3D 4.3F 6.3A 6.3C
FBA_CMD<25..0> 4.1G< 4.3D> 6.1D< 6.2A<>
FBA_CMD<1> 4.3D 6.2A 6.2C 6.2E 6.2G
FBA_CMD<2> 4.3D 6.2A 6.2C
FBA_CMD<3> 4.3D 6.2A 6.2C 6.2E 6.2G
FBA_CMD<4> 4.3D 6.2A 6.2C 6.2E 6.2G
FBA_CMD<5> 4.3D 6.2A 6.2C 6.2E 6.2G
FBA_CMD<6> 4.3D 6.2A 6.2C 6.2E 6.2G
FBA_CMD<7> 4.3D 6.2A 6.2C 6.2E 6.2G
FBA_CMD<8> 4.3D 6.2A 6.2C 6.2E 6.2G
FBA_CMD<9> 4.3D 6.3A 6.3C 6.3E 6.3G
FBA_CMD<10> 4.3D 6.2A 6.2C 6.2E 6.2G
FBA_CMD<11> 4.3D 6.2E 6.2G
FBA_CMD<12> 4.3D 6.3A 6.3C 6.3E 6.3G
FBA_CMD<13> 4.3D 6.3A 6.3C 6.3E 6.3G
FBA_CMD<14> 4.3D 6.2A 6.2C 6.2E 6.2G
FBA_CMD<16> 4.3D 4.3G 6.3E 6.3G
FBA_CMD<17> 4.3D 6.2A 6.2C 6.2E 6.2G
FBA_CMD<19> 4.3D 6.2A 6.2C 6.2E 6.2G
FBA_CMD<20> 4.3D 6.3A 6.2C 6.2E 6.2G
FBA_CMD<21> 4.3D 6.2A 6.2C 6.2E 6.2G
FBA_CMD<22> 4.3D 6.2A 6.2C 6.2E 6.2G
FBA_CMD<26> 4.3G 4.4D 6.3A 6.3C 4.4D 6.2A 6.2C 6.2E 6.2G
FBA_CMD<27> 4.3G 4.4D 6.3E 6.3G
FBA_D<0> 4.1B 6.4B
FBA_D<63..0> 4.1A<> 4.1G<> 6.1D<> 6.3A<>
FBA_D<1> 4.1B 6.4B
FBA_D<2> 4.1B 6.3B
FBA_D<3> 4.1B 6.3B
FBA_D<4> 4.1B 6.4B
FBA_D<5> 4.1B 6.4B
FBA_D<6> 4.1B 6.3B
FBA_D<7> 4.1B 6.3B
FBA_D<8> 4.1B 6.4B
FBA_D<9> 4.1B 6.4B
FBA_D<10> 4.1B 6.4B
FBA_D<11> 4.1B 6.4B
FBA_D<12> 4.1B 6.4B
FBA_D<13> 4.1B 6.4B
FBA_D<14> 4.1B 6.4B
FBA_D<15> 4.2B 6.4B
FBA_D<16> 4.2B 6.3C
FBA_D<17> 4.2B 6.4C
FBA_D<18> 4.2B 6.4C
FBA_D<19> 4.2B 6.3C
FBA_D<20> 4.2B 6.3C
FBA_D<21> 4.2B 6.4C
FBA_D<22> 4.2B 6.3C
FBA_D<23> 4.2B 6.3C
FBA_D<24> 4.2B 6.4C
FBA_D<25> 4.2B 6.4C
FBA_D<26> 4.2B 6.4C
FBA_D<27> 4.2B 6.4C
FBA_D<28> 4.2B 6.4C
FBA_D<29> 4.2B 6.4C
FBA_D<30> 4.2B 6.4C
FBA_D<31> 4.2B 6.4C
FBC_D<32> 4.2B 6.3E
FBC_D<33> 4.2B 6.3E
FBC_D<34> 4.2B 6.3E
FBC_D<35> 4.2B 6.4E
FBC_D<36> 4.2B 6.3E
FBC_D<37> 4.2B 6.4E
FBC_D<38> 4.2B 6.3E
FBC_D<39> 4.2B 6.4E
FBC_D<40> 4.2B 6.4E
FBC_D<41> 4.2B 6.4E
FBC_D<42> 4.2B 6.4E
FBC_D<43> 4.2B 6.4E
FBC_D<44> 4.2B 6.4E
FBC_D<45> 4.3B 6.4E
FBC_D<46> 4.3B 6.4E
FBC_D<47> 4.3B 6.4E
FBC_D<48> 4.3B 6.4G
FBC_D<49> 4.3B 6.4G
FBC_D<50> 4.3B 6.3G
FBC_D<51> 4.3B 6.3G
FBC_D<52> 4.3B 6.3G
FBC_D<53> 4.3B 6.3G
FBC_D<54> 4.3B 6.3G
FBC_D<55> 4.3B 6.4G
FBC_D<56> 4.3B 6.4G
FBC_D<57> 4.3B 6.4G
FBC_D<58> 4.3B 6.4G
FBC_D<59> 4.3B 6.4G
FBC_D<60> 4.3B 6.4G
FBC_D<61> 4.3B 6.4G
FBC_D<62> 4.3B 6.4G
FBC_D<63> 4.3B 6.4G
FBC_DEBUG 4.4D
FBC_DQM<0> 4.3B 6.4B
FBC_DQM<7..0> 4.1G< 4.3A> 6.1D< 6.4A<
FBC_DQM<1> 4.3B 6.4B
FBC_DQM<2> 4.3B 6.4C
FBC_DQM<3> 4.3B 6.4C
FBC_DQM<4> 4.3B 6.4E
FBC_DQM<5> 4.3B 6.4E
FBC_DQM<6> 4.3B 6.4G
FBC_DQM<7> 4.3B 6.4G
FBC_DQS0 4.4B<> 6.1F<> 6.4A<>
FBC_DQS0* 4.4B<> 6.1F<> 6.4A<>
FBC_DQS1 4.4B<> 6.1F<> 6.4A<>
FBC_DQS1* 4.4B<> 6.1F<> 6.4A<>
FBC_DQS2 4.4B<> 6.1F<> 6.4C<>
FBC_DQS2* 4.4B<> 6.1F<> 6.4C<>
FBC_DQS3 4.4B<> 6.1F<> 6.4C<>
FBC_DQS3* 4.4B<> 6.1F<> 6.4C<>
FBC_DQS4 4.4B<> 6.1F<> 6.4E<>
FBC_DQS4* 4.4B<> 6.1F<> 6.4E<>
FBC_DQS5 4.4B<> 6.1F<> 6.4E<>
FBC_DQS5* 4.4B<> 6.1F<> 6.4E<>
FBC_DQS6 4.4B<> 6.1F<> 6.4G<>
FBC_DQS6* 4.4B<> 6.1F<> 6.4G<>
FBC_DQS7 4.4B<> 6.1F<> 6.4G<>
FBC_DQS7* 4.4B<> 6.1F<> 6.4G<>
FBVDDQ 18.1G
FBVDDQ_R 18.4F
FB_CAL_PD_VDDQ 4.1G< 4.5D
FB_CAL_PU_GND 4.1G< 4.5D
FB_CAL_TERM_GND 4.1G< 4.5D
FB_PLLAVDD 3.5D
FB_VREF_A 5.1F< 5.3B
FB_VREF_B 5.1F<
FB_VREF_C 5.1F< 5.3F
FB_VREF_D 5.1F<
FB_VREF_E 6.1F< 6.3B
FB_VREF_F 6.1F<
FB_VREF_G 6.1F< 6.3F
FB_VREF_H 6.1F<
GPIO0_DVI_A_HPD 10.4E
GPIO0_DVI_A_HPD_C 10.3G
GPIO0_DVI_A_HPD_R 10.4F
GPIO4_FAN_TACH 14.2D
GPIO5_NVVDD_VSEL 14.2D> 19.4D<
GPIO8_THERM_OVERT* 14.2D> 14.4G<
GPIO9_FAN_PWM_ALERT 14.2D
GPIO9_FAN_PWM_Q 14.2F
GPIO9_FAN_PWM_QL 14.2G
GPIO15_HDMI_D_HPD 11.2G
GPIO15_HDMI_D_HPD_11.2F
GPIO15_HDMI_D_HPD_R 11.2G
GPU_PLLVDD 15.1G< 15.4B
GPU_TESTMODE 2.5A< 2.5F
HDMI_PD 11.1B
I2CA_SCL 8.3C
I2CA_SCL_C 8.2G> 10.3G<
I2CA_SCL_R 8.2E
I2CA_SDA 8.3C
I2CA_SDA_C 8.2G<> 10.3G<>
I2CA_SDA_R 8.2E
I2CB_SCL 9.3C
I2CB_SCL_C 9.2G
I2CB_SCL_R 9.2E
I2CB_SDA 9.3C
I2CB_SDA_C 9.2G
I2CB_SDA_R 9.2E
I2CC_SCL 14.1D
I2CC_SCL_R 14.3E
I2CC_SDA 14.1D
I2CC_SDA_R 14.3E
I2CY_SCL 11.3C
I2CY_SCL_R 11.3D
I2CY_SCL_R_Q 11.3E
I2CY_SDA 11.2C
I2CY_SDA_R 11.2D
I2CY_SDA_R_Q 11.2E
IFPAB_IOVDD 10.1G< 10.3B
IFPAB_PLLVDD 10.1G< 10.2B
IFPAB_RSET 10.1G< 10.2B
IFPAB_TXC 10.1G< 10.3D
IFPAB_TXC* 10.1G< 10.3D
IFPAB_TXD0 10.1G< 10.2D
IFPAB_TXD0* 10.1G< 10.2D
IFPAB_TXD1 10.1G< 10.2D
IFPAB_TXD1* 10.1G< 10.2D
IFPAB_TXD2 10.1G< 10.2D
IFPAB_TXD2* 10.1G< 10.2D
IFPAB_TXD4 10.1G< 10.3D
IFPAB_TXD4* 10.1G< 10.3D
IFPAB_TXD5 10.1G< 10.3D
IFPAB_TXD5* 10.1G< 10.3D
IFPAB_TXD6 10.1G< 10.3D
IFPAB_TXD6* 10.1G< 10.3D
IFPAB_TXVDD 11.1G<
IFPEF_PLLVDD 11.1G<
IFPEF_RSET 11.1G<
IFPE_IOVDD 11.4A
IFPE_PLLVDD 11.4A
IFPE_RSET 11.4B
IFPE_TXC 11.4C
IFPE_TXC* 11.4C
IFPE_TXC_C 11.1C 11.4F
IFPE_TXC_C* 11.1C 11.4F
IFPE_TXD0 11.4C
IFPE_TXD0* 11.4C
IFPE_TXD0_C 11.1C 11.4F
IFPE_TXD0_C* 11.1C 11.4F
IFPE_TXD1 11.4C
IFPE_TXD1* 11.4C
IFPE_TXD1_C 11.1C 11.4F
IFPE_TXD1_C* 11.1C 11.4F
IFPE_TXD2 11.4C
IFPE_TXD2* 11.4C
IFPE_TXD2_C 11.1C 11.4F
IFPE_TXD2_C* 11.1C 11.4F
JTAG_TCK 14.2C
JTAG_TDI 14.2C
JTAG_TDO 14.2C
JTAG_TMS 14.2C
JTAG_TRST* 14.2C
MIOB_CLKIN 13.4E
NVVDD 19.5A
NVVDD_GND_SENSE 2.4F
NVVDD_RBOT1 19.4E
NVVDD_SENSE 2.4G> 19.3H<
NVVDD_VSEL 19.4E
PEX_CAL_PD_VDDQ 2.5A<
PEX_CAL_PU_GND 2.5A<
PEX_PLLVDD 2.4F 2.5A<
PEX_PRSNT 2.4C
PEX_REFCLK 2.2D 2.5A<
PEX_REFCLK* 2.2D 2.5A<
PEX_RST 10.4B< 14.4G>
PEX_RST* 2.2D> 2.5A< 10.4A<
PEX_RST_R* 10.4B
PEX_RX0 2.2D 2.4A<
PEX_RX0* 2.2D 2.4A<
PEX_RX1 2.2D 2.4A<
PEX_RX1* 2.2D 2.4A<
PEX_RX2 2.2D 2.4A<
PEX_RX2* 2.2D 2.4A<
PEX_RX3 2.3D 2.4A<
PEX_RX3* 2.3D 2.4A<
PEX_RX4 2.3D 2.4A<
PEX_RX4* 2.3D 2.4A<
PEX_RX5 2.3D 2.4A<
PEX_RX5* 2.3D 2.4A<
PEX_RX6 2.3D 2.4A<
PEX_RX6* 2.3D 2.4A<
PEX_RX7 2.3D 2.4A<
PEX_RX7* 2.3D 2.4A<
PEX_RX8 2.4A< 2.4D
PEX_RX8* 2.4A< 2.4D
PEX_RX9 2.4A< 2.4D
PEX_RX9* 2.4A< 2.4D
PEX_RX10 2.4A< 2.4D
PEX_RX10* 2.4D 2.5A<
PEX_RX11 2.4D 2.5A<
PEX_RX11* 2.4D 2.5A<
PEX_RX12 2.4D 2.5A<
PEX_RX12* 2.4D 2.5A<
PEX_RX13 2.5A< 2.5D
PEX_RX13* 2.5A< 2.5D
PEX_RX14 2.5A< 2.5D
PEX_RX14* 2.5A< 2.5D
PEX_RX15 2.5A< 2.5D
PEX_RX15* 2.5A< 2.5D
PEX_TERMP 2.5A< 2.5F
PEX_TX0 2.2E 2.3A<
PEX_TX0* 2.2E 2.3A<
PEX_TX1 2.2E 2.3A<
PEX_TX1* 2.2E 2.3A<
PEX_TX2 2.2E 2.3A<
PEX_TX2* 2.2E 2.3A<
PEX_TX3 2.3A< 2.3E
PEX_TX3* 2.3A< 2.3E
PEX_TX4 2.3A< 2.3E
PEX_TX4* 2.3A< 2.3E
PEX_TX5 2.3A< 2.3E
PEX_TX5* 2.3A< 2.3E
PEX_TX6 2.3A< 2.3E
PEX_TX6* 2.3A< 2.3E
PEX_TX7 2.3A< 2.3E
PEX_TX7* 2.3A< 2.3E
PEX_TX8 2.3A< 2.4E
PEX_TX8* 2.3A< 2.4E
PEX_TX9 2.3A< 2.4E
PEX_TX9* 2.3A< 2.4E
PEX_TX10 2.3A< 2.4E
PEX_TX10* 2.3A< 2.4E
PEX_TX11 2.3A< 2.4E
PEX_TX11* 2.3A< 2.4E
PEX_TX12 2.4A< 2.4E
PEX_TX12* 2.4A< 2.4E
PEX_TX13 2.4A< 2.5E
PEX_TX13* 2.4A< 2.5E
PEX_TX14 2.4A< 2.5E
PEX_TX14* 2.4A< 2.5E
PEX_TX15 2.4A< 2.5E
PEX_TX15* 2.4A< 2.5E
PEX_TX0D 2.2A< 2.2D
PEX_TX0D* 2.2A< 2.2D
PEX_TX1D 2.2A< 2.2D
PEX_TX1D* 2.2A< 2.2D
PEX_TX2D 2.2A< 2.2D
PEX_TX2D* 2.2A< 2.2D
PEX_TX3D 2.2A< 2.3D
PEX_TX3D* 2.2A< 2.3D
PEX_TX4D 2.2A< 2.3D
PEX_TX4D* 2.2A< 2.3D
PEX_TX5D 2.2A< 2.3D
PEX_TX5D* 2.2A< 2.3D
PEX_TX6D 2.2A< 2.3D
PEX_TX6D* 2.2A< 2.3D
PEX_TX7D 2.2A< 2.3D
PEX_TX7D* 2.2A< 2.3D
PEX_TX8D 2.2A< 2.4D
PEX_TX8D* 2.2A< 2.4D
PEX_TX9D 2.2A< 2.4D
PEX_TX9D* 2.2A< 2.4D
PEX_TX10D 2.2A< 2.4D
PEX_TX10D* 2.2A< 2.4D
PEX_TX11D 2.2A< 2.4D
PEX_TX11D* 2.2A< 2.4D
PEX_TX12D 2.2A< 2.4D
PEX_TX12D* 2.2A< 2.4D
PEX_TX13D 2.2A< 2.5D
PEX_TX13D* 2.3A< 2.5D
PEX_TX14D 2.3A< 2.5D
PEX_TX14D* 2.3A< 2.5D
PEX_TX15D 2.3A< 2.5D
PEX_TX15D* 2.3A< 2.5D
PEX_VDD 20.1G
PS4_FB_PEXVDD 20.3D
PS_FB_BOOT 18.1G< 18.2D
PS_FB_CH 18.4D
PS_FB_CP 18.1G<
PS_FB_EN 18.4A
PS_FB_EN* 18.4B
PS_FB_FB 18.1G< 18.3D
PS_FB_FS 18.1G< 18.3C
PS_FB_LG 18.1G< 18.3D
PS_FB_PHASE 18.1G< 18.3D
PS_FB_RC_CP 18.1G< 18.3D
PS_FB_RC_FB 18.1G< 18.3F
PS_FB_RC_SNUB 18.1G< 18.5F
PS_FB_UG 18.1G< 18.2D
PS_FB_UG_R 18.1G< 18.2E
PS_FB_VCC12 18.1G< 18.2C
PS_NVVDD_BOOT 19.2D 19.5A<
PS_NVVDD_CP 19.5A<
PS_NVVDD_CP_CH 19.3D
PS_NVVDD_CP_PC1 19.3D 19.5A<
PS_NVVDD_CP_PC2 19.3F 19.5A<
PS_NVVDD_EN 19.2C
PS_NVVDD_EN* 19.3B
PS_NVVDD_FB 19.2D 19.5A<
PS_NVVDD_FB_R 19.3G 19.5A<
PS_NVVDD_LG 19.2D 19.5A<
PS_NVVDD_LG_D 19.2E
PS_NVVDD_PHASE 19.2D 19.5A<
PS_NVVDD_RC 19.3F 19.5A<
PS_NVVDD_UG 19.2D 19.5A<
PS_NVVDD_UG_R 19.2E 19.5A<
PS_NVVDD_VCC12 19.2C 19.5A<
ROM_CS* 15.1G< 15.2D
ROM_SCLK 15.1G< 15.2D< 16.3B> 16.3C>
ROM_SI 15.1G< 15.2D< 16.2B> 16.2C>
ROM_SO 15.1G< 15.2D< 16.2C 16.3B>
SNN_3V3AUX 2.1C
SNN_BUFRST* 15.3D
SNN_CEC 15.2B
SNN_C_ID0 9.4H
SNN_C_ID2 9.4G
SNN_FBA1_NC_A2 5.3A
SNN_FBA1_NC_E2 5.3A
SNN_FBA1_NC_R8 5.2A
SNN_FBA1_NC_W4 5.2A
SNN_FBA1_NC_W8 5.2A
SNN_FBA2_NC_A2 5.3C
SNN_FBA2_NC_E2 5.3C
SNN_FBA2_NC_R8 5.2C
SNN_FBA2_NC_W4 5.2C
SNN_FBA2_NC_W8 5.2C
SNN_FBA3_NC_M2 5.3E
SNN_FBA3_NC_P10 5.3E
SNN_FBA3_NC_R8 5.2E
SNN_FBA3_NC_W4 5.2E
SNN_FBA3_NC_W8 5.2E
SNN_FBA4_NC_M2 5.3G
SNN_FBA4_NC_P10 5.3G
SNN_FBA4_NC_R8 5.2G
SNN_FBA4_NC_W4 5.2G
SNN_FBA4_NC_W8 5.2G
SNN_FBA_CMD28 3.4D
SNN_FBA_CMD29 3.4D
SNN_FBA_CMD30 3.4D
SNN_FBA_CMD<15> 3.3D
SNN_FBA_CMD<18> 3.3D
SNN_FBA_CMD<23> 3.4D
SNN_FBA_WDS0 3.4B
SNN_FBA_WDS0* 3.4B
SNN_FBA_WDS1 3.4B
SNN_FBA_WDS1* 3.4B
SNN_FBA_WDS2 3.4B
SNN_FBA_WDS2* 3.4B
SNN_FBA_WDS3 3.4B
SNN_FBA_WDS3* 3.4B
SNN_FBC1_NC_M2 6.3A
SNN_FBC1_NC_P10 6.3A
SNN_FBC1_NC_R8 6.2A
SNN_FBC1_NC_W4 6.2A
SNN_FBC1_NC_W8 6.2A
SNN_FBC2_NC_M2 6.3C
SNN_FBC2_NC_P10 6.3C
SNN_FBC2_NC_R8 6.2C
SNN_FBC2_NC_W4 6.2C
SNN_FBC2_NC_W8 6.2C
SNN_FBC3_NC_M2 6.3E
SNN_FBC3_NC_P10 6.3E
SNN_FBC3_NC_R8 6.2E
SNN_FBC3_NC_W4 6.2E
SNN_FBC3_NC_W8 6.2E
SNN_FBC4_NC_M2 6.3G
SNN_FBC4_NC_P10 6.3G
SNN_FBC4_NC_R8 6.2G
SNN_FBC4_NC_W4 6.2G
SNN_FBC4_NC_W8 6.2G
SNN_FBC_CMD28 4.4D
SNN_FBC_CMD29 4.4D
SNN_FBC_CMD30 4.4D
SNN_FBC_CMD<15> 4.3D
SNN_FBC_CMD<18> 4.3D
SNN_FBC_CMD<23> 4.4D
SNN_FBC_WDS0 4.4B
SNN_FBC_WDS0* 4.4B
SNN_FBC_WDS1 4.4B
SNN_FBC_WDS1* 4.4B
SNN_FBC_WDS2 4.4B
SNN_FBC_WDS2* 4.4B
SNN_FBC_WDS3 4.4B
SNN_FBC_WDS3* 4.4B
SNN_FB_VREF 3.5B
SNN_GND_SENSE_1 2.4F

ALL NVIDIA DESIGN SPECIFICATIONS, REFERENCE SPECIFICATIONS, REFERENCE BOARDS, FILES, DRAWINGS, DIAGNOSTICS, LISTS AND OTHER DOCUMENTS OR INFORMATION (TOGETHER AND SEPARATELY, "MATERIALS") ARE BEING PROVIDED "AS IS". THE MATERIALS MAY CONTAIN KNOWN AND UNKNOWN VIOLATIONS OR DEVIATIONS OF INDUSTRY STANDARDS AND SPECIFICATIONS. NVIDIA MAKES NO WARRANTIES, EXPRESSED, IMPLIED, STATUTORY OR OTHERWISE WITH RESPECT TO THE MATERIALS OR OTHERWISE, AND EXPRESSLY DISCLAIMS ALL IMPLIED WARRANTIES INCLUDING, WITHOUT LIMITATION, THE WARRANTIES OF DESIGN, OF NONINFRINGEMENT, MERCHANTABILITY OR FITNESS FOR A PARTICULAR PURPOSE, OR ARISING FROM A COURSE OF DEALING, TRADE USAGE, TRADE PRACTICE, OR INDUSTRY STANDARDS.

ASSEMBLY	BASE LEVEL GENERIC SCHEMATIC ONLY, COMMON & NO_STUFF ASSEMBLY NOTES AND BOM NOT FINAL
PAGE DETAIL	<edit here to insert page detail>

NVIDIA CORPORATION
2701 SAN TOMAS EXPRESSWAY
SANTA CLARA, CA 95050, USA

NV_PN	600-10626-BASE-100 B		
ID		PAGE	
NAME	<ENGINEER>	DATE	23-OCT-2009

MSI-RMA 夏普科技 2010022

Power Supply IV: PEXVDD

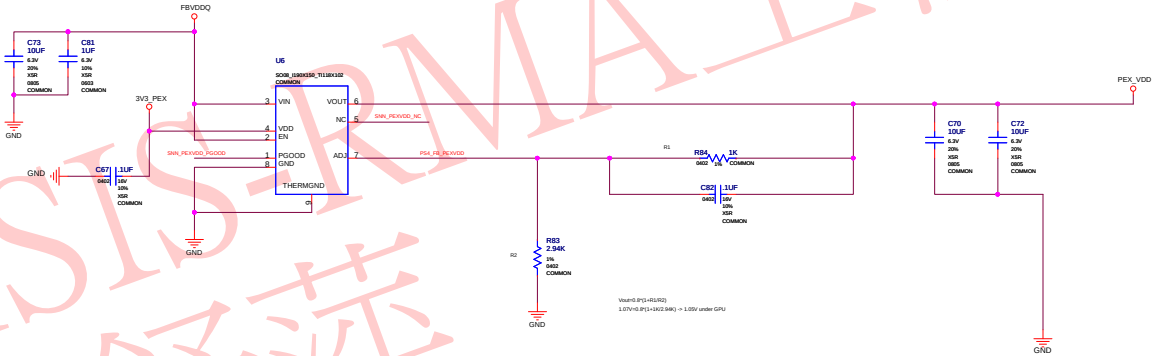

MSI-RMA工程課
夏舒萍
20100622

ASSEMBLY	BASE LEVEL GENERIC SCHEMATIC ONLY, COMMON & NO_STUFF ASSEMBLY NOTES AND BOM NOT FINAL
PAGE DETAIL	Power Supply: PEXVDD

ALL NVIDIA DESIGN SPECIFICATIONS, REFERENCE SPECIFICATIONS, REFERENCE BOARDS, FILES, DRAWINGS, DIAGNOSTICS, LISTS AND OTHER DOCUMENTS OR INFORMATION (TOGETHER AND SEPARATELY, 'MATERIALS') ARE BEING PROVIDED 'AS IS'. THE MATERIALS MAY CONTAIN KNOWN AND UNKNOWN VIOLATIONS OR DEVIATIONS OF INDUSTRY STANDARDS AND SPECIFICATIONS. NVIDIA MAKES NO WARRANTIES, EXPRESSED, IMPLIED, STATUTORY OR OTHERWISE WITH RESPECT TO THE MATERIALS OR OTHERWISE, AND EXPRESSLY DISCLAIMS ALL IMPLIED WARRANTIES INCLUDING, WITHOUT LIMITATION, THE WARRANTIES OF DESIGN, OF NONINFRINGEMENT, MERCHANTABILITY OR FITNESS FOR A PARTICULAR PURPOSE, OR ARISING FROM A COURSE OF DEALING, TRADE USAGE, TRADE PRACTICE, OR INDUSTRY STANDARDS.

NVIDIA CORPORATION
2701 SAN TOMAS EXPRESSWAY
SANTA CLARA, CA 95050, USA

NV_PN	600-10626-BASE-100 B		
ID		PAGE	
NAME		DATE	23-OCT-2009

Power Supply III: NVVDD

Vin Irms = 6.4A @ 0.925V/21A
Vin Irms = 7.4A @ 0.875V/25A

UP6103ASU8:315-0524-000 300KHZ 0.6V
APW7165KE :315-0460-000 300KHZ 0.8V
UP6101BU8 :315-0462-000 300KHZ 0.8V
ISL6545CBZ:316-0067-000 300KHZ 0.6V
NCP1579 :315-xxxx-000 300KHZ 0.8V
L6783A :315-xxxx-000 300KHZ 0.8V

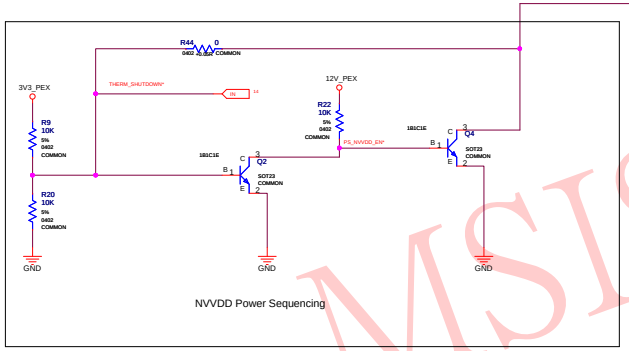

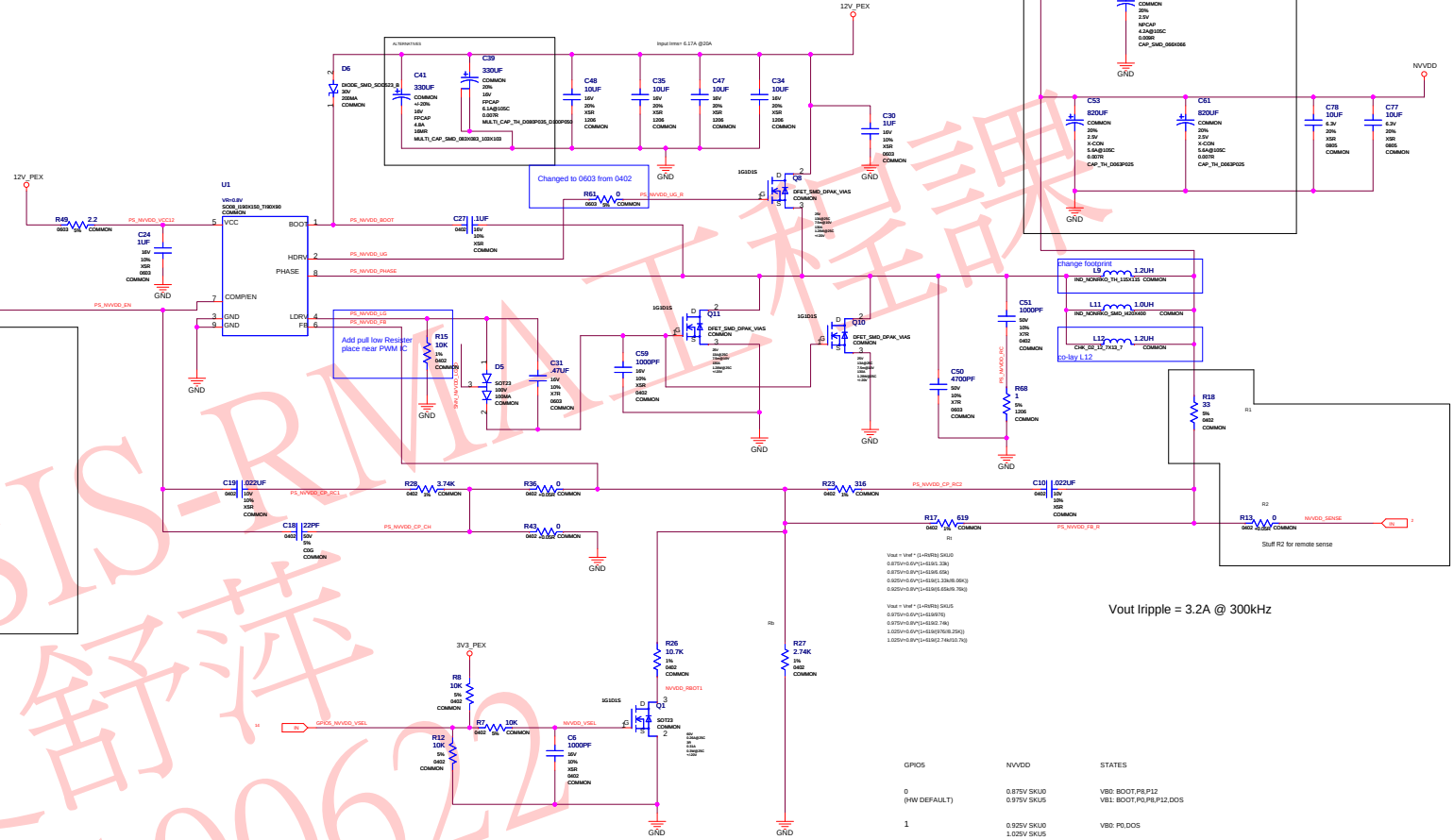

GPIO5	NVVDD	STATES
0 (HW DEFAULT)	0.875V SKU0 0.975V SKU5	VB0: BOOT,P8,P12 VB1: BOOT,P0,P8,P12,DOS
1	0.925V SKU0 1.025V SKU5	VB0: P0,DOS

Net Name	MIN_LINE_WIDTH	VOLTAGE	NV_NET_MAX_CURRENT
NVVDD	16MIL	0.925V	25A
PS_NVVDD_VCC12	10MIL		
PS_NVVDD_BOOT	10MIL		
PS_NVVDD_UG	10MIL		
PS_NVVDD_PHASE	16MIL		
PS_NVVDD_LG	10MIL		
PS_NVVDD_FB	12MIL		
PS_NVVDD_CP	12MIL		
PS_NVVDD_UG_R	10MIL		
PS_NVVDD_CP_RC1	12MIL		
PS_NVVDD_CP_RC2	12MIL		
PS_NVVDD_FB_R	12MIL		
PS_NVVDD_RC	12MIL		

MSIS-RMA工程課
夏舒萍
20100622

ASSEMBLY	BASE LEVEL GENERIC SCHEMATIC ONLY, COMMON & NO_STUFF ASSEMBLY NOTES AND BOM NOT FINAL
PAGE DETAIL	Power Supply III: NVVDD

ALL NVIDIA DESIGN SPECIFICATIONS, REFERENCE SPECIFICATIONS, REFERENCE BOARDS, FILES, DRAWINGS, DIAGNOSTICS, LISTS AND OTHER DOCUMENTS OR INFORMATION (TOGETHER AND SEPARATELY, 'MATERIALS') ARE BEING PROVIDED 'AS IS'. THE MATERIALS MAY CONTAIN KNOWN AND UNKNOWN VIOLATIONS OR DEVIATIONS OF INDUSTRY STANDARDS AND SPECIFICATIONS. NVIDIA MAKES NO WARRANTIES, EXPRESSED, IMPLIED, STATUTORY OR OTHERWISE WITH RESPECT TO THE MATERIALS OR OTHERWISE, AND EXPRESSLY DISCLAIMS ALL IMPLIED WARRANTIES INCLUDING, WITHOUT LIMITATION, THE WARRANTIES OF DESIGN, OF NONINFRINGEMENT, MERCHANTABILITY OR FITNESS FOR A PARTICULAR PURPOSE, OR ARISING FROM A COURSE OF DEALING, TRADE USAGE, TRADE PRACTICE, OR INDUSTRY STANDARDS.

NVIDIA CORPORATION
2701 SAN TOMAS EXPRESSWAY
SANTA CLARA, CA 95050, USA

NV_PN	600-10626-BASE-100 B		
ID		PAGE	
NAME		DATE	23-OCT-2009

Power Supply II: FBVDDQ

Net Name	MIN_LINE_WIDTH	VOLTAGE	NV_NET_MAX_CURRENT
FBVDDQ	36MIL	1.8V	6A
PS_FB_FS	12MIL		
PS_FB_VCC12	16MIL		
PS_FB_BOOT	16MIL		
PS_FB_UG	16MIL		
PS_FB_PHASE	16MIL		
PS_FB_LG	16MIL		
PS_FB_FB	12MIL		
PS_FB_CP	12MIL		
PS_FB_UG_R	16MIL		
PS_FB_RC_CP	12MIL		
PS_FB_RC_FB	12MIL		
PS_FB_RC_SNUB	16MIL		

Vin Irms = 2.3A @ 1.8V/6A

Vout Iripple = 3.5A @ 300kHz

UP6103ASU8:315-0524-000 300KHZ 0.6V
APW7165KE :315-0460-000 300KHZ 0.8V
UP6101BU8 :315-0462-000 300KHZ 0.8V
ISL6545CBZ:316-0067-000 300KHZ 0.6V
NCP1579 :315-xxxx-000 300KHZ 0.8V
L6783A :315-xxxx-000 300KHZ 0.8V

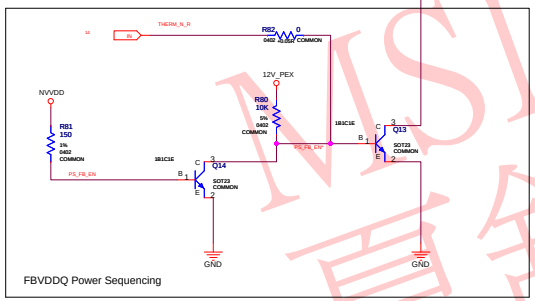

FBVDDQ Power Sequencing

MSIS-RMA工程課
夏舒祥
20100622

ASSEMBLY	BASE LEVEL GENERIC SCHEMATIC ONLY, COMMON & NO_STUFF ASSEMBLY NOTES AND BOM NOT FINAL
PAGE DETAIL	Power Supply II: FBVDDQ

ALL NVIDIA DESIGN SPECIFICATIONS, REFERENCE SPECIFICATIONS, REFERENCE BOARDS, FILES, DRAWINGS, DIAGNOSTICS, LISTS AND OTHER DOCUMENTS OR INFORMATION (TOGETHER AND SEPARATELY, 'MATERIALS') ARE BEING PROVIDED 'AS IS'. THE MATERIALS MAY CONTAIN KNOWN AND UNKNOWN VIOLATIONS OR DEVIATIONS OF INDUSTRY STANDARDS AND SPECIFICATIONS. NVIDIA MAKES NO WARRANTIES, EXPRESSED, IMPLIED, STATUTORY OR OTHERWISE WITH RESPECT TO THE MATERIALS OR OTHERWISE, AND EXPRESSLY DISCLAIMS ALL IMPLIED WARRANTIES INCLUDING, WITHOUT LIMITATION, THE WARRANTIES OF DESIGN, OF NONINFRINGEMENT, MERCHANTABILITY OR FITNESS FOR A PARTICULAR PURPOSE, OR ARISING FROM A COURSE OF DEALING, TRADE USAGE, TRADE PRACTICE, OR INDUSTRY STANDARDS.

NVIDIA CORPORATION
2701 SAN TOMAS EXPRESSWAY
SANTA CLARA, CA 95050, USA

NV_PN	600-10626-BASE-100 B		
ID		PAGE	
NAME		DATE	23-OCT-2009

Power Supply I: 5V

Net Name	MIN_LINE_WIDTH	VOLTAGE	NV_NET_MAX_CURRENT
12V_PEX	12V_PEX 40Mil	12V	5.5A
GND	GND 30Mil	0V	
5V	5V 30Mil	5V	0.1A

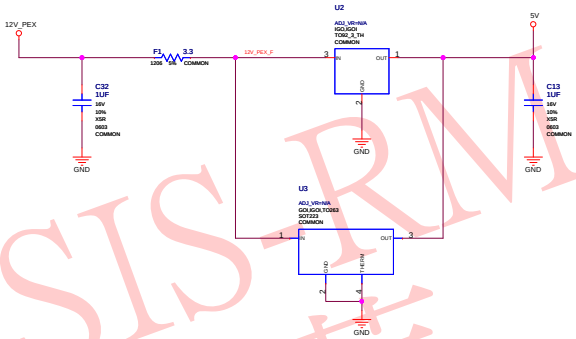

MSI-RMA工程課
夏舒萍
20100622

ASSEMBLY	BASE LEVEL GENERIC SCHEMATIC ONLY, COMMON & NO_STUFF ASSEMBLY NOTES AND BOM NOT FINAL
PAGE DETAIL	Power Supply I: 5V

ALL NVIDIA DESIGN SPECIFICATIONS, REFERENCE SPECIFICATIONS, REFERENCE BOARDS, FILES, DRAWINGS, DIAGNOSTICS, LISTS AND OTHER DOCUMENTS OR INFORMATION (TOGETHER AND SEPARATELY, 'MATERIALS') ARE BEING PROVIDED 'AS IS'. THE MATERIALS MAY CONTAIN KNOWN AND UNKNOWN VIOLATIONS OR DEVIATIONS OF INDUSTRY STANDARDS AND SPECIFICATIONS. NVIDIA MAKES NO WARRANTIES, EXPRESSED, IMPLIED, STATUTORY OR OTHERWISE WITH RESPECT TO THE MATERIALS OR OTHERWISE, AND EXPRESSLY DISCLAIMS ALL IMPLIED WARRANTIES INCLUDING, WITHOUT LIMITATION, THE WARRANTIES OF DESIGN, OF NONINFRINGEMENT, MERCHANTABILITY OR FITNESS FOR A PARTICULAR PURPOSE, OR ARISING FROM A COURSE OF DEALING, TRADE USAGE, TRADE PRACTICE, OR INDUSTRY STANDARDS.

NVIDIA CORPORATION
2701 SAN TOMAS EXPRESSWAY
SANTA CLARA, CA 95050, USA

NV_PN	600-10626-BASE-100 B		
ID		PAGE	
NAME		DATE	23-OCT-2009

Straps

MULTI LEVEL STRAP

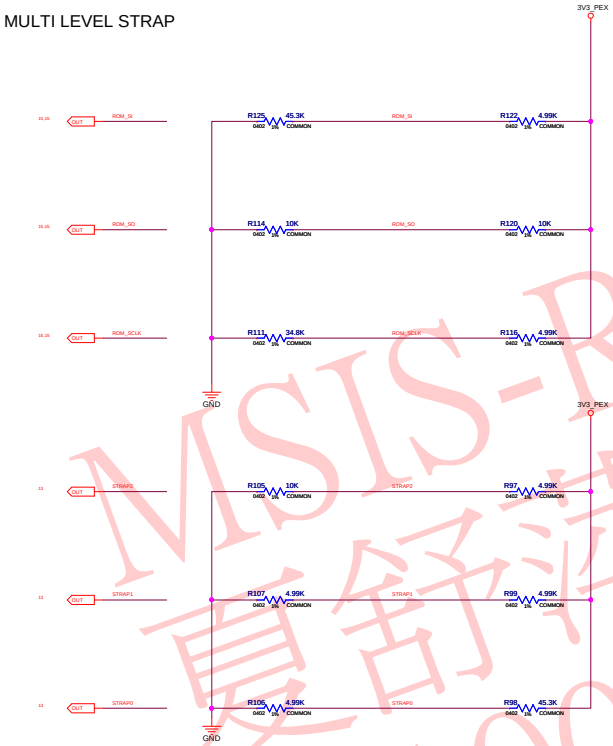

Strap0	USER[3:0]	1111 EDID	45k PU
Strap1	3GIO_PADCFG[3:0]	1000 DT	5k PU
Strap2	PCI_DEVID[3:0]	0001 GT216-205:0A21 0000 GT216-305:0A20	10k PD 5k PD
ROM_SI	RAMCFG[3:0]	0000 128bit 64Mx16 DDR2 Nanya/Elpida 0001 128bit 64Mx16 DDR2 Samsung 0010 128bit 64Mx16 DDR2 Qimonda 0011 128bit 64Mx16 DDR2 Hynix 0100 128bit 64Mx16 DDR2 Micron 0101 128bit 64Mx16 DDR2 Winbond	1000 64bit 64Mx16 DDR2 Nanya/Elpida 1001 64bit 64Mx16 DDR2 Samsung 1010 64bit 64Mx16 DDR2 Qimonda 1011 64bit 64Mx16 DDR2 Hynix 1100 64bit 64Mx16 DDR2 Micron 1101 64bit 64Mx16 DDR2 Winbond
ROM_SCLK	3: PCI_DEVID_EXT 2: SUB_VENDOR (1 = BIOS rom present) 1: SLOT_CLK_CFG (1 = common clk MCH/GPU) 0: PEX_PLL_EN_TERM (0 = disable pll term)	0110	35k PD
ROM_SO	3: XUI_417 (0 = POR 27MHz) 2:FB_0_BAR_SIZE (0 = POR 256MB) 1: SMB_ALT_ADDR (0=POR, 1= multiGPU) 0: VGA_DEVICE (0=3D device, 1=POR VGA device)	0001	10k PD

0	PD 5k	8	PU 5k
1	PD 10k	9	PU 10k
2	PD 15k	10	PU 15k
3	PD 20k	11	PU 20k
4	PD 25k	12	PU 25k
5	PD 30k	13	PU 30k
6	PD 35k	14	PU 35k
7	PD 45k	15	PU 45k

MSIS-RMA工程課
黃舒洋
20100622

ASSEMBLY	BASE LEVEL GENERIC SCHEMATIC ONLY, COMMON & NO_STUFF ASSEMBLY NOTES AND BOM NOT FINAL
PAGE DETAIL	Straps

ALL NVIDIA DESIGN SPECIFICATIONS, REFERENCE SPECIFICATIONS, REFERENCE BOARDS, FILES, DRAWINGS, DIAGNOSTICS, LISTS AND OTHER DOCUMENTS OR INFORMATION (TOGETHER AND SEPARATELY, 'MATERIALS') ARE BEING PROVIDED 'AS IS'. THE MATERIALS MAY CONTAIN KNOWN AND UNKNOWN VIOLATIONS OR DEVIATIONS OF INDUSTRY STANDARDS AND SPECIFICATIONS. NVIDIA MAKES NO WARRANTIES, EXPRESSED, IMPLIED, STATUTORY OR OTHERWISE WITH RESPECT TO THE MATERIALS OR OTHERWISE, AND EXPRESSLY DISCLAIMS ALL IMPLIED WARRANTIES INCLUDING, WITHOUT LIMITATION, THE WARRANTIES OF DESIGN, OF NONINFRINGEMENT, MERCHANTABILITY OR FITNESS FOR A PARTICULAR PURPOSE, OR ARISING FROM A COURSE OF DEALING, TRADE USAGE, TRADE PRACTICE, OR INDUSTRY STANDARDS.

NVIDIA CORPORATION
2701 SAN TOMAS EXPRESSWAY
SANTA CLARA, CA 95050, USA

NV_PN	600-10626-BASE-100 B		
ID		PAGE	
NAME		DATE	23-OCT-2009

BIOS, HDCP,XTAL, Mechanical

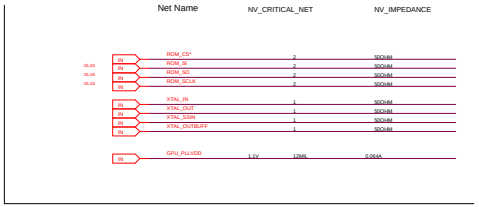

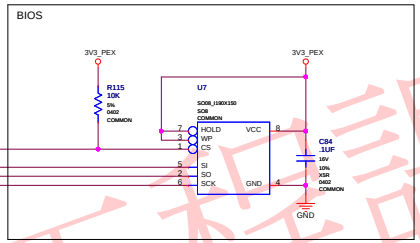

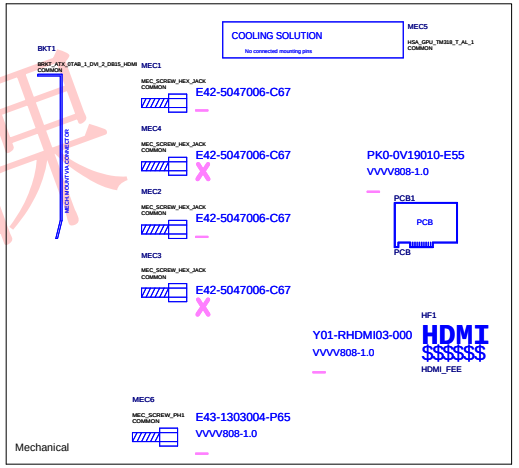

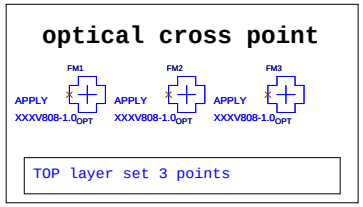

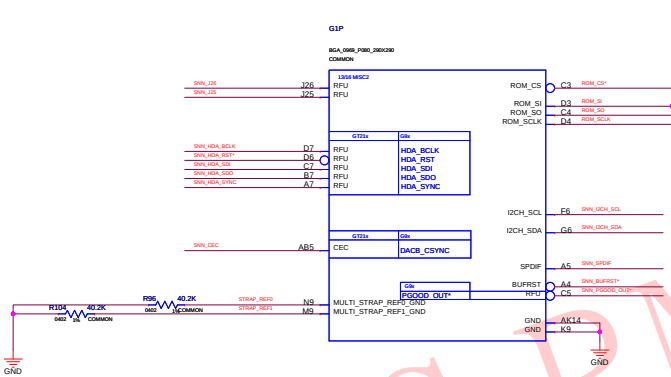

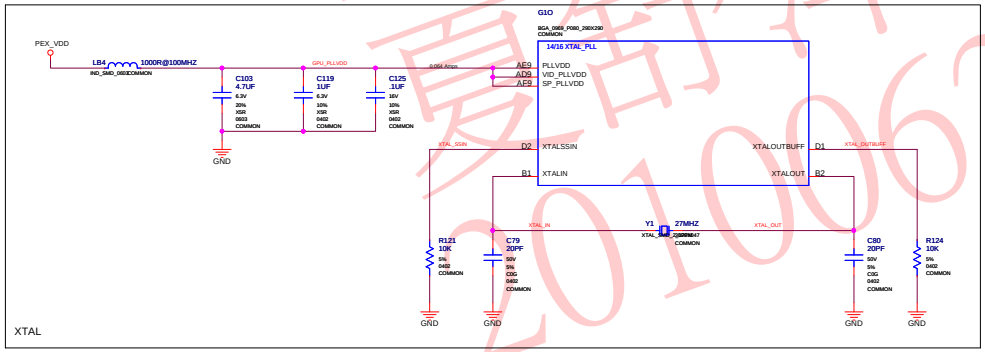

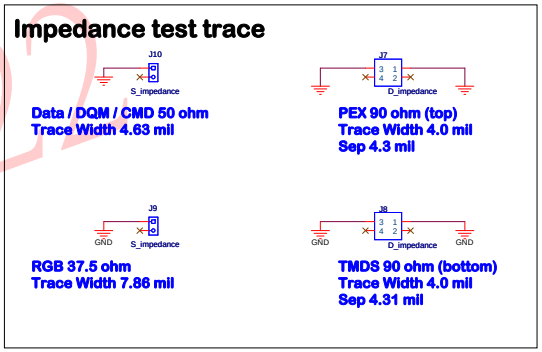

MSIS-RMA工程課
黃舒萍
20100622

ASSEMBLY	BASE LEVEL GENERIC SCHEMATIC ONLY, COMMON & NO_STUFF ASSEMBLY NOTES AND BOM NOT FINAL
PAGE DETAIL	BIOS, HDCP,XTAL AND Mechanical

ALL NVIDIA DESIGN SPECIFICATIONS, REFERENCE SPECIFICATIONS, REFERENCE BOARDS, FILES, DRAWINGS, DIAGNOSTICS, LISTS AND OTHER DOCUMENTS OR INFORMATION (TOGETHER AND SEPARATELY, 'MATERIALS') ARE BEING PROVIDED 'AS IS'. THE MATERIALS MAY CONTAIN KNOWN AND UNKNOWN VIOLATIONS OR DEVIATIONS OF INDUSTRY STANDARDS AND SPECIFICATIONS. NVIDIA MAKES NO WARRANTIES, EXPRESSED, IMPLIED, STATUTORY OR OTHERWISE WITH RESPECT TO THE MATERIALS OR OTHERWISE, AND EXPRESSLY DISCLAIMS ALL IMPLIED WARRANTIES INCLUDING, WITHOUT LIMITATION, THE WARRANTIES OF DESIGN, OF NONINFRINGEMENT, MERCHANTABILITY OR FITNESS FOR A PARTICULAR PURPOSE, OR ARISING FROM A COURSE OF DEALING, TRADE USAGE, TRADE PRACTICE, OR INDUSTRY STANDARDS.

NVIDIA CORPORATION
2701 SAN TOMAS EXPRESSWAY
SANTA CLARA, CA 95050, USA

NV_PN	600-10626-BASE-100 B		
ID		PAGE	
NAME		DATE	23-OCT-2009

Thermal Sensors, GPIOs, JTAG, Fan

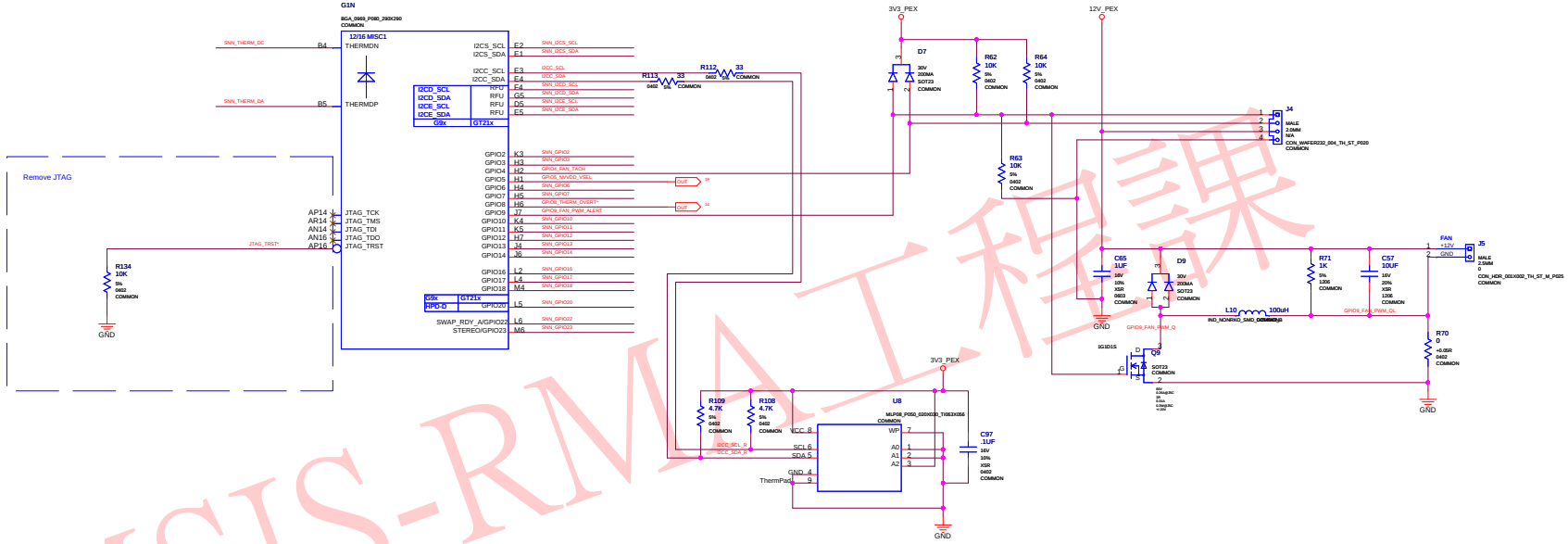

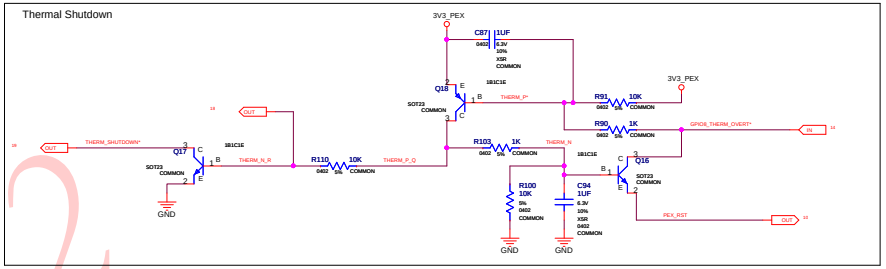

MSIS-RMA工程課
夏舒萍
20100622

ASSEMBLY	BASE LEVEL GENERIC SCHEMATIC ONLY, COMMON & NO_STUFF ASSEMBLY NOTES AND BOM NOT FINAL
PAGE DETAIL	Thermal Sensors, GPIOs, JTAG, AND Fan

ALL NVIDIA DESIGN SPECIFICATIONS, REFERENCE SPECIFICATIONS, REFERENCE BOARDS, FILES, DRAWINGS, DIAGNOSTICS, LISTS AND OTHER DOCUMENTS OR INFORMATION (TOGETHER AND SEPARATELY, 'MATERIALS') ARE BEING PROVIDED 'AS IS'. THE MATERIALS MAY CONTAIN KNOWN AND UNKNOWN VIOLATIONS OR DEVIATIONS OF INDUSTRY STANDARDS AND SPECIFICATIONS. NVIDIA MAKES NO WARRANTIES, EXPRESSED, IMPLIED, STATUTORY OR OTHERWISE WITH RESPECT TO THE MATERIALS OR OTHERWISE, AND EXPRESSLY DISCLAIMS ALL IMPLIED WARRANTIES INCLUDING, WITHOUT LIMITATION, THE WARRANTIES OF DESIGN, OF NONINFRINGEMENT, MERCHANTABILITY OR FITNESS FOR A PARTICULAR PURPOSE, OR ARISING FROM A COURSE OF DEALING, TRADE USAGE, TRADE PRACTICE, OR INDUSTRY STANDARDS.

NVIDIA CORPORATION
2701 SAN TOMAS EXPRESSWAY
SANTA CLARA, CA 95050, USA

NV_PN	600-10626-BASE-100 B		
ID		PAGE	
NAME		DATE	23-OCT-2009

MIOA, MIOB Interface

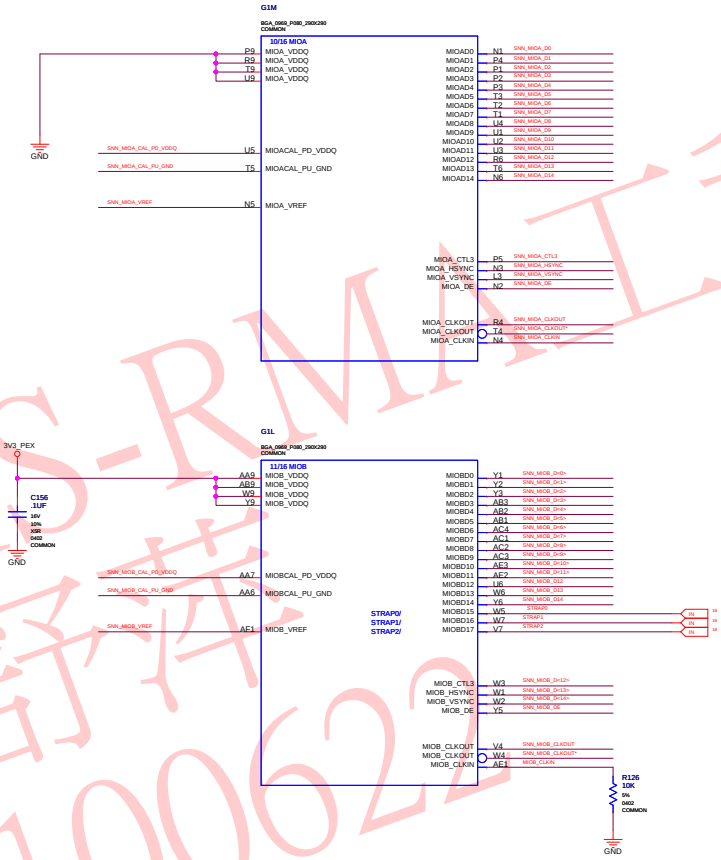

MSIS-RMA工程課
夏舒祥
20100622

NVIDIA CORPORATION	
2701 SAN TOMAS EXPRESSWAY	
SANTA CLARA, CA 95050, USA	
NV_PN	600-10626-BASE-100 B
ID	PAGE
NAME	DATE 23-OCT-2009
ASSEMBLY	BASE LEVEL GENERIC SCHEMATIC ONLY, COMMON & NO_STUFF ASSEMBLY NOTES AND BOM NOT FINAL
PAGE DETAIL	MIOA, MIOB Interface

ALL NVIDIA DESIGN SPECIFICATIONS, REFERENCE SPECIFICATIONS, REFERENCE BOARDS, FILES, DRAWINGS, DIAGNOSTICS, LISTS AND OTHER DOCUMENTS OR INFORMATION (TOGETHER AND SEPARATELY, 'MATERIALS') ARE BEING PROVIDED 'AS IS'. THE MATERIALS MAY CONTAIN KNOWN AND UNKNOWN VIOLATIONS OR DEVIATIONS OF INDUSTRY STANDARDS AND SPECIFICATIONS. NVIDIA MAKES NO WARRANTIES, EXPRESSED, IMPLIED, STATUTORY OR OTHERWISE WITH RESPECT TO THE MATERIALS OR OTHERWISE, AND EXPRESSLY DISCLAIMS ALL IMPLIED WARRANTIES INCLUDING, WITHOUT LIMITATION, THE WARRANTIES OF DESIGN, OF NONINFRINGEMENT, MERCHANTABILITY OR FITNESS FOR A PARTICULAR PURPOSE, OR ARISING FROM A COURSE OF DEALING, TRADE USAGE, TRADE PRACTICE, OR INDUSTRY STANDARDS.

IFPC,IFPD

MSIS-RMA工程課
夏得萍
20100622

ASSEMBLY	BASE LEVEL GENERIC SCHEMATIC ONLY, COMMON & NO_STUFF ASSEMBLY NOTES AND BOM NOT FINAL
PAGE DETAIL	IFPC,IFPD

ALL NVIDIA DESIGN SPECIFICATIONS, REFERENCE SPECIFICATIONS, REFERENCE BOARDS, FILES, DRAWINGS, DIAGNOSTICS, LISTS AND OTHER DOCUMENTS OR INFORMATION (TOGETHER AND SEPARATELY, 'MATERIALS') ARE BEING PROVIDED 'AS IS'. THE MATERIALS MAY CONTAIN KNOWN AND UNKNOWN VIOLATIONS OR DEVIATIONS OF INDUSTRY STANDARDS AND SPECIFICATIONS. NVIDIA MAKES NO WARRANTIES, EXPRESSED, IMPLIED, STATUTORY OR OTHERWISE WITH RESPECT TO THE MATERIALS OR OTHERWISE, AND EXPRESSLY DISCLAIMS ALL IMPLIED WARRANTIES INCLUDING, WITHOUT LIMITATION, THE WARRANTIES OF DESIGN, OF NONINFRINGEMENT, MERCHANTABILITY OR FITNESS FOR A PARTICULAR PURPOSE, OR ARISING FROM A COURSE OF DEALING, TRADE USAGE, TRADE PRACTICE, OR INDUSTRY STANDARDS.

NVIDIA CORPORATION
2701 SAN TOMAS EXPRESSWAY
SANTA CLARA, CA 95050, USA

NV_PN	600-10626-BASE-100 B		
ID		PAGE	
NAME		DATE	23-OCT-2009

HDMI .. Link E

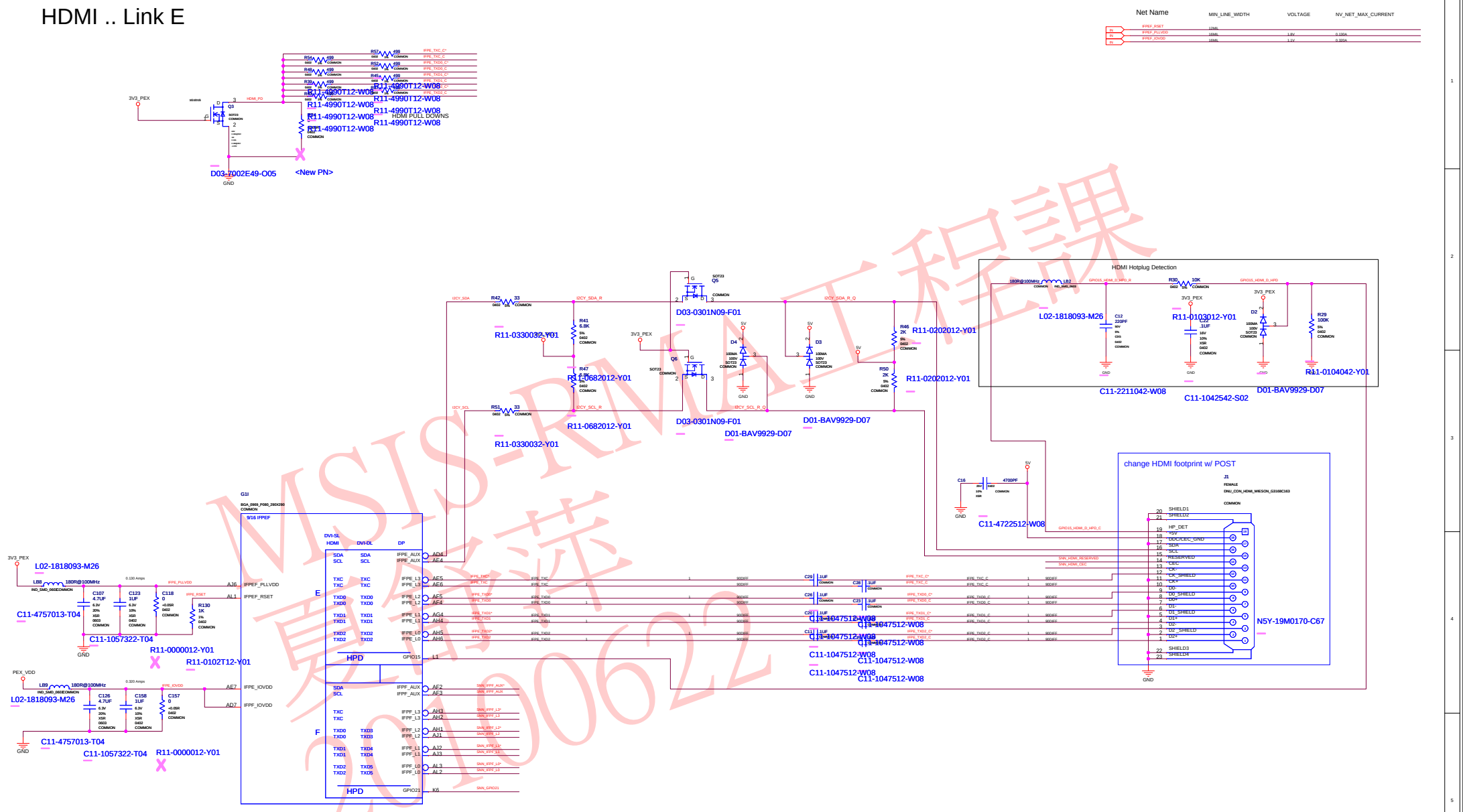

MSIS-RMA工程課 夏鈞荣 20100622

ASSEMBLY	BASE LEVEL GENERIC SCHEMATIC ONLY, COMMON & NO_STUFF ASSEMBLY NOTES AND BOM NOT FINAL
PAGE DETAIL	HDMI .. Link E

ALL NVIDIA DESIGN SPECIFICATIONS, REFERENCE SPECIFICATIONS, REFERENCE BOARDS, FILES, DRAWINGS, DIAGNOSTICS, LISTS AND OTHER DOCUMENTS OR INFORMATION (TOGETHER AND SEPARATELY, 'MATERIALS') ARE BEING PROVIDED 'AS IS'. THE MATERIALS MAY CONTAIN KNOWN AND UNKNOWN VIOLATIONS OR DEVIATIONS OF INDUSTRY STANDARDS AND SPECIFICATIONS. NVIDIA MAKES NO WARRANTIES, EXPRESSED, IMPLIED, STATUTORY OR OTHERWISE WITH RESPECT TO THE MATERIALS OR OTHERWISE, AND EXPRESSLY DISCLAIMS ALL IMPLIED WARRANTIES INCLUDING, WITHOUT LIMITATION, THE WARRANTIES OF DESIGN, OF NONINFRINGEMENT, MERCHANTABILITY OR FITNESS FOR A PARTICULAR PURPOSE, OR ARISING FROM A COURSE OF DEALING, TRADE USAGE, TRADE PRACTICE, OR INDUSTRY STANDARDS.

NVIDIA CORPORATION
2701 SAN TOMAS EXPRESSWAY
SANTA CLARA, CA 95050, USA

NV_PN	600-10626-BASE-100 B		
ID		PAGE	
NAME		DATE	23-OCT-2009

Internal TMDS .. Link A & B

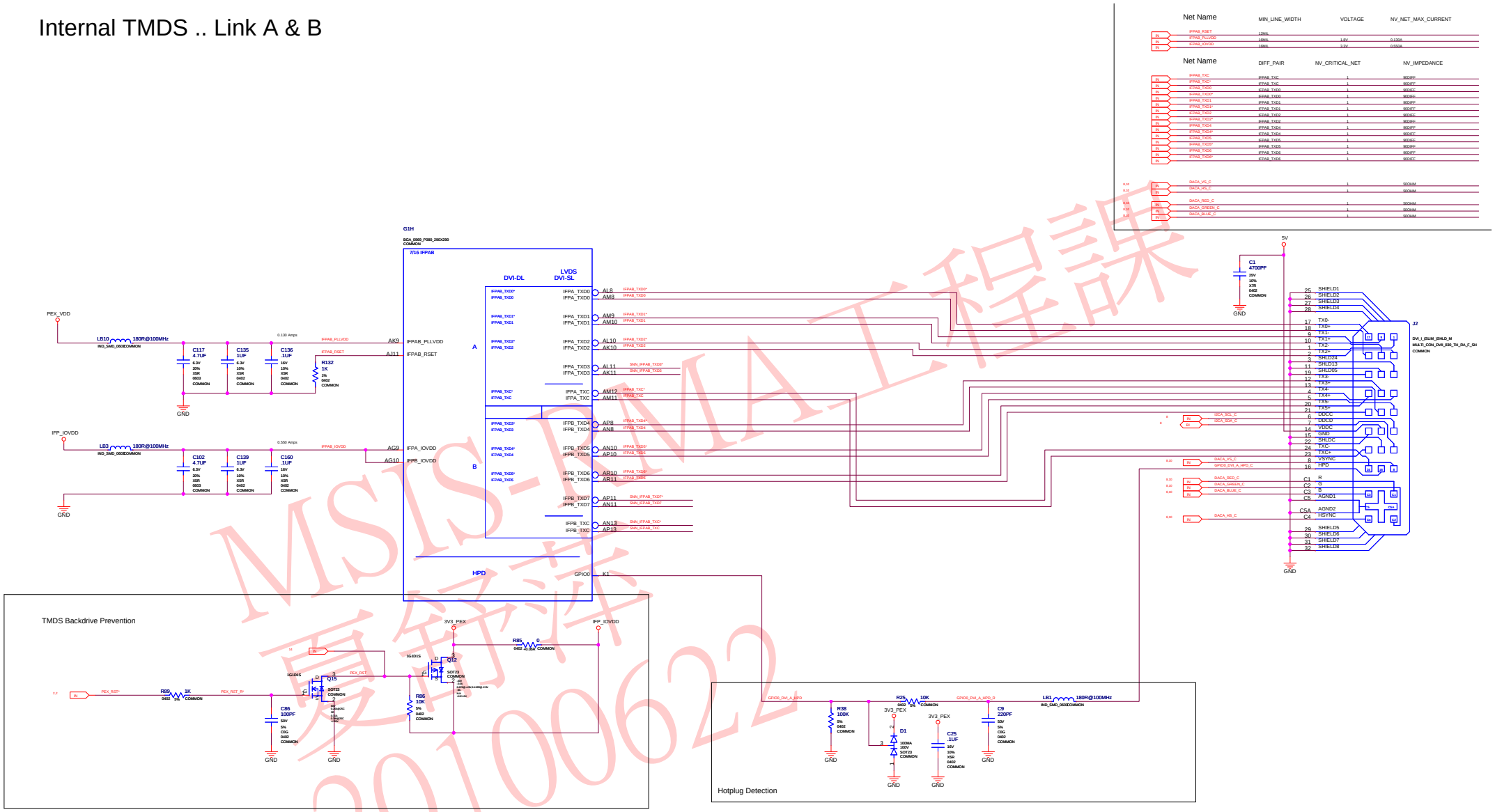

MSIS-DMA工程課
夏舒森
20100622

ASSEMBLY	BASE LEVEL GENERIC SCHEMATIC ONLY, COMMON & NO_STUFF ASSEMBLY NOTES AND BOM NOT FINAL
PAGE DETAIL	Internal TMDS .. Link A & B

ALL NVIDIA DESIGN SPECIFICATIONS, REFERENCE SPECIFICATIONS, REFERENCE BOARDS, FILES, DRAWINGS, DIAGNOSTICS, LISTS AND OTHER DOCUMENTS OR INFORMATION (TOGETHER AND SEPARATELY, 'MATERIALS') ARE BEING PROVIDED 'AS IS'. THE MATERIALS MAY CONTAIN KNOWN AND UNKNOWN VIOLATIONS OR DEVIATIONS OF INDUSTRY STANDARDS AND SPECIFICATIONS. NVIDIA MAKES NO WARRANTIES, EXPRESSED, IMPLIED, STATUTORY OR OTHERWISE WITH RESPECT TO THE MATERIALS OR OTHERWISE, AND EXPRESSLY DISCLAIMS ALL IMPLIED WARRANTIES INCLUDING, WITHOUT LIMITATION, THE WARRANTIES OF DESIGN, OF NONINFRINGEMENT, MERCHANTABILITY OR FITNESS FOR A PARTICULAR PURPOSE, OR ARISING FROM A COURSE OF DEALING, TRADE USAGE, TRADE PRACTICE, OR INDUSTRY STANDARDS.

NVIDIA CORPORATION
2701 SAN TOMAS EXPRESSWAY
SANTA CLARA, CA 95050, USA

NV_PN	600-10626-BASE-100 B		
ID		PAGE	
NAME		DATE	23-OCT-2009

DACB, D-SUB Connector
remove all

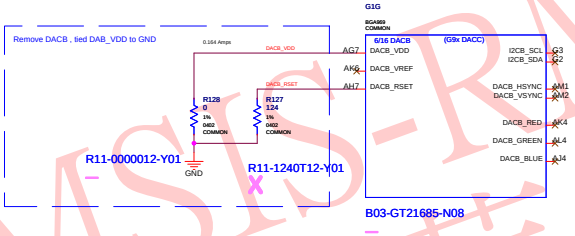

MSIS-RMA工程課
夏舒萍
20100622

ASSEMBLY	BASE LEVEL GENERIC SCHEMATIC ONLY, COMMON & NO_STUFF ASSEMBLY NOTES AND BOM NOT FINAL
PAGE DETAIL	DACB, DB15 Connector

ALL NVIDIA DESIGN SPECIFICATIONS, REFERENCE SPECIFICATIONS, REFERENCE BOARDS, FILES, DRAWINGS, DIAGNOSTICS, LISTS AND OTHER DOCUMENTS OR INFORMATION (TOGETHER AND SEPARATELY, 'MATERIALS') ARE BEING PROVIDED 'AS IS'. THE MATERIALS MAY CONTAIN KNOWN AND UNKNOWN VIOLATIONS OR DEVIATIONS OF INDUSTRY STANDARDS AND SPECIFICATIONS. NVIDIA MAKES NO WARRANTIES, EXPRESSED, IMPLIED, STATUTORY OR OTHERWISE WITH RESPECT TO THE MATERIALS OR OTHERWISE, AND EXPRESSLY DISCLAIMS ALL IMPLIED WARRANTIES INCLUDING, WITHOUT LIMITATION, THE WARRANTIES OF DESIGN, OF NONINFRINGEMENT, MERCHANTABILITY OR FITNESS FOR A PARTICULAR PURPOSE, OR ARISING FROM A COURSE OF DEALING, TRADE USAGE, TRADE PRACTICE, OR INDUSTRY STANDARDS.

NVIDIA CORPORATION
2701 SAN TOMAS EXPRESSWAY
SANTA CLARA, CA 95050, USA

NV_PN	600-10626-BASE-100 B		
ID		PAGE	
NAME		DATE	23-OCT-2009

DACA

Net Name	NV_CRITICAL_NET	NV_IMPEDANCE
DACA_HSYNC	2	50OHM
DACA_VSYNC	2	50OHM
DACA_HS_BUF	2	50OHM
DACA_VS_BUF	2	50OHM
DACA_HS_BUF_R	2	50OHM
DACA_VS_BUF_R	2	50OHM
DACA_RED	1	50OHM
DACA_GREEN	1	50OHM
DACA_BLUE	1	50OHM

Net Name	MIN_LINE_WIDTH	VOLTAGE	NV_NET_MAX_CURRENT
DACA_VREF			
DACA_RSET			
DACA_VDD		3.3V	0.164A

EMI filter option, Place close to DVI connector

PLACE NEAR SYNC BUFFER

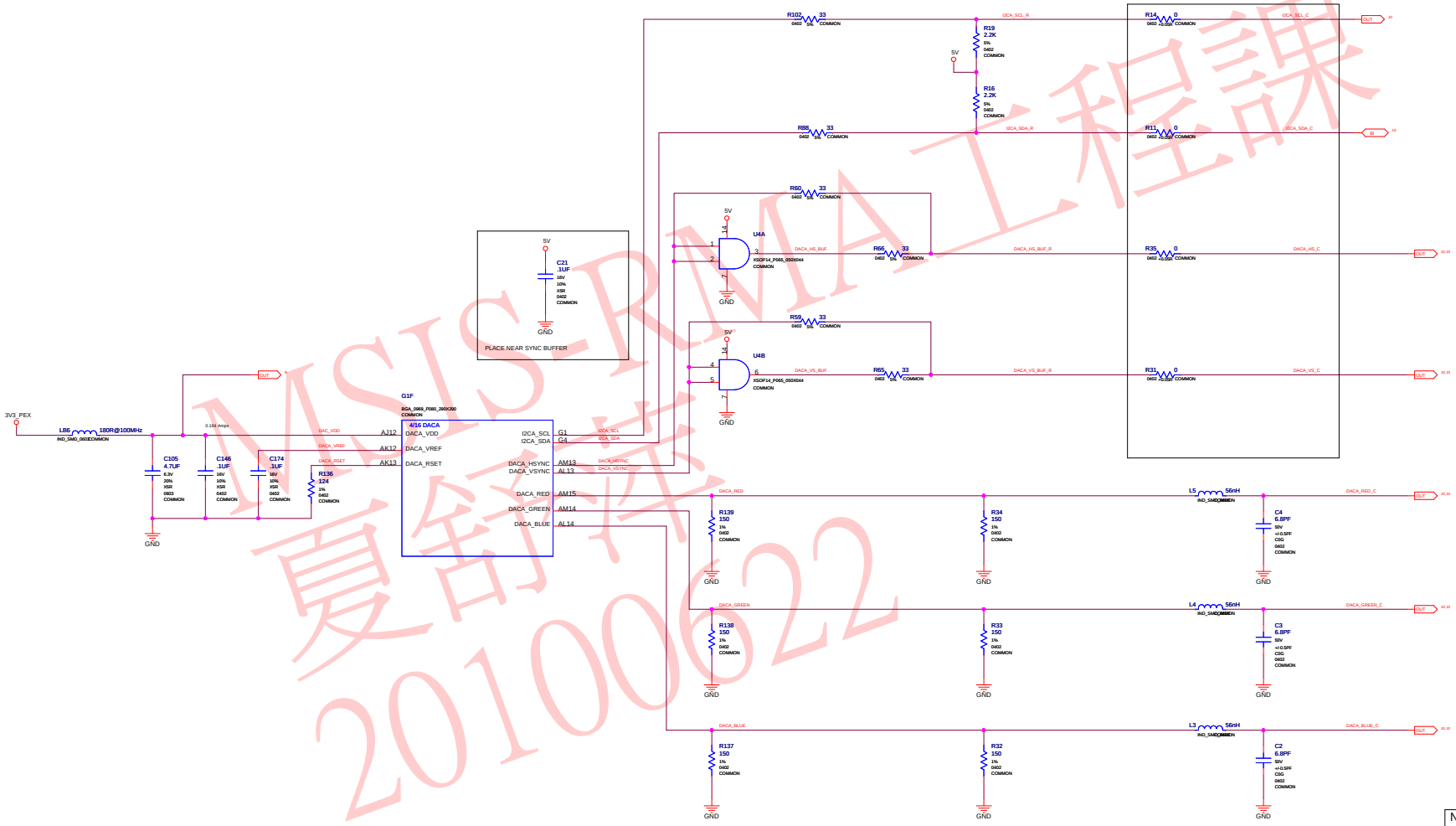

ASSEMBLY	BASE LEVEL GENERIC SCHEMATIC ONLY, COMMON & NO_STUFF ASSEMBLY NOTES AND BOM NOT FINAL
PAGE DETAIL	DACA

ALL NVIDIA DESIGN SPECIFICATIONS, REFERENCE SPECIFICATIONS, REFERENCE BOARDS, FILES, DRAWINGS, DIAGNOSTICS, LISTS AND OTHER DOCUMENTS OR INFORMATION (TOGETHER AND SEPARATELY, 'MATERIALS') ARE BEING PROVIDED 'AS IS'. THE MATERIALS MAY CONTAIN KNOWN AND UNKNOWN VIOLATIONS OR DEVIATIONS OF INDUSTRY STANDARDS AND SPECIFICATIONS. NVIDIA MAKES NO WARRANTIES, EXPRESSED, IMPLIED, STATUTORY OR OTHERWISE WITH RESPECT TO THE MATERIALS OR OTHERWISE, AND EXPRESSLY DISCLAIMS ALL IMPLIED WARRANTIES INCLUDING, WITHOUT LIMITATION, THE WARRANTIES OF DESIGN, OF NONINFRINGEMENT, MERCHANTABILITY OR FITNESS FOR A PARTICULAR PURPOSE, OR ARISING FROM A COURSE OF DEALING, TRADE USAGE, TRADE PRACTICE, OR INDUSTRY STANDARDS.

NVIDIA CORPORATION
2701 SAN TOMAS EXPRESSWAY
SANTA CLARA, CA 95050, USA

NV_PN	600-10626-BASE-100 B		
ID		PAGE	
NAME		DATE	23-OCT-2009

MSI S-RMA 工程課 20100622

Decoupling Caps

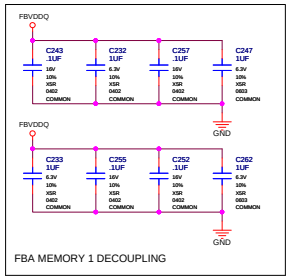

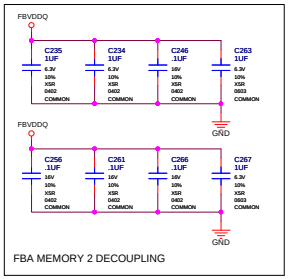

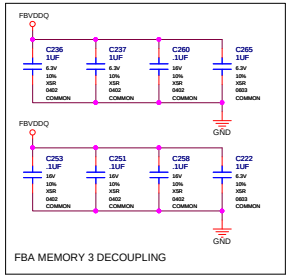

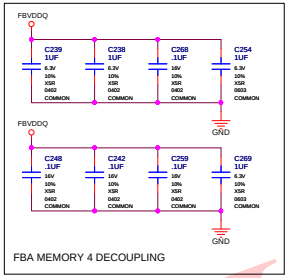

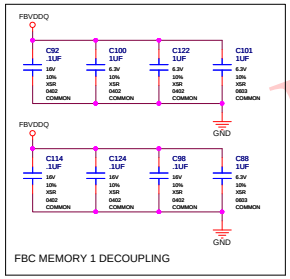

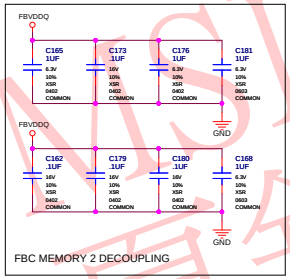

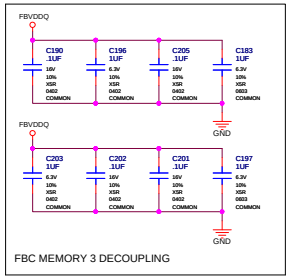

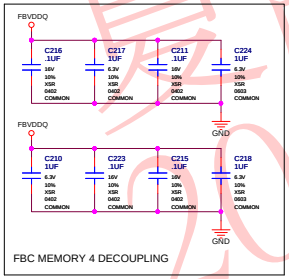

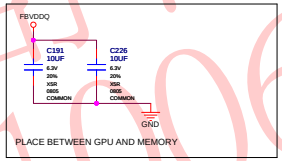

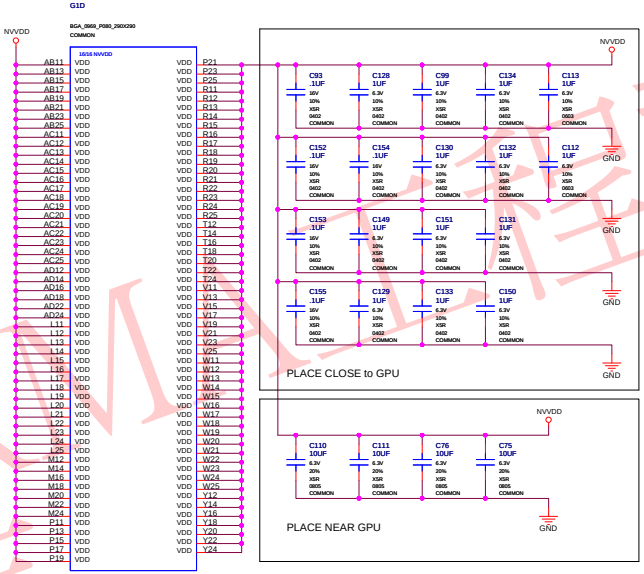

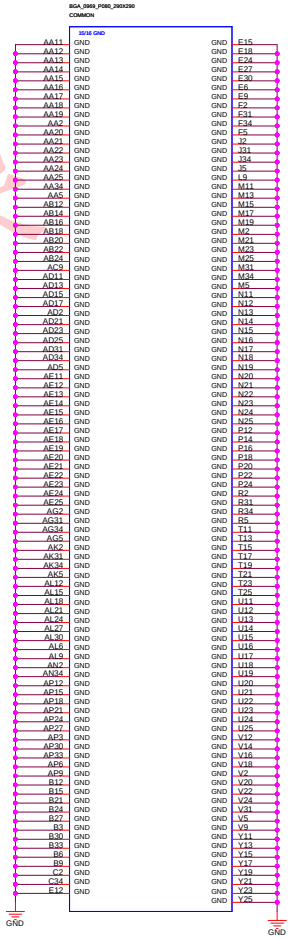

WSIS-RMA工程課
曾舒萍
20100622

ASSEMBLY	BASE LEVEL GENERIC SCHEMATIC ONLY, COMMON & NO_STUFF ASSEMBLY NOTES AND BOM NOT FINAL
PAGE DETAIL	Decoupling Caps

ALL NVIDIA DESIGN SPECIFICATIONS, REFERENCE SPECIFICATIONS, REFERENCE BOARDS, FILES, DRAWINGS, DIAGNOSTICS, LISTS AND OTHER DOCUMENTS OR INFORMATION (TOGETHER AND SEPARATELY, 'MATERIALS') ARE BEING PROVIDED 'AS IS'. THE MATERIALS MAY CONTAIN KNOWN AND UNKNOWN VIOLATIONS OR DEVIATIONS OF INDUSTRY STANDARDS AND SPECIFICATIONS. NVIDIA MAKES NO WARRANTIES, EXPRESSED, IMPLIED, STATUTORY OR OTHERWISE WITH RESPECT TO THE MATERIALS OR OTHERWISE, AND EXPRESSLY DISCLAIMS ALL IMPLIED WARRANTIES INCLUDING, WITHOUT LIMITATION, THE WARRANTIES OF DESIGN, OF NONINFRINGEMENT, MERCHANTABILITY OR FITNESS FOR A PARTICULAR PURPOSE, OR ARISING FROM A COURSE OF DEALING, TRADE USAGE, TRADE PRACTICE, OR INDUSTRY STANDARDS.

NVIDIA CORPORATION
2701 SAN TOMAS EXPRESSWAY
SANTA CLARA, CA 95050, USA

NV_PN	600-10626-BASE-100 B		
ID		PAGE	
NAME		DATE	23-OCT-2009

Partition C Memories

GT21x CMD MAP

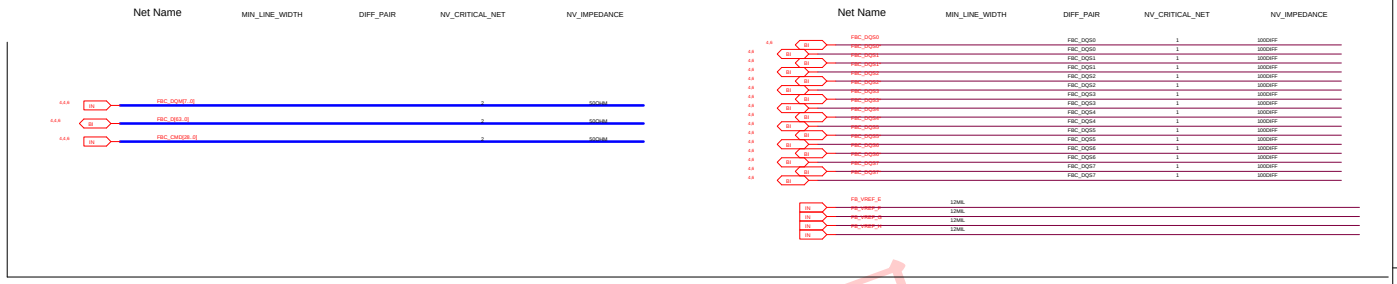

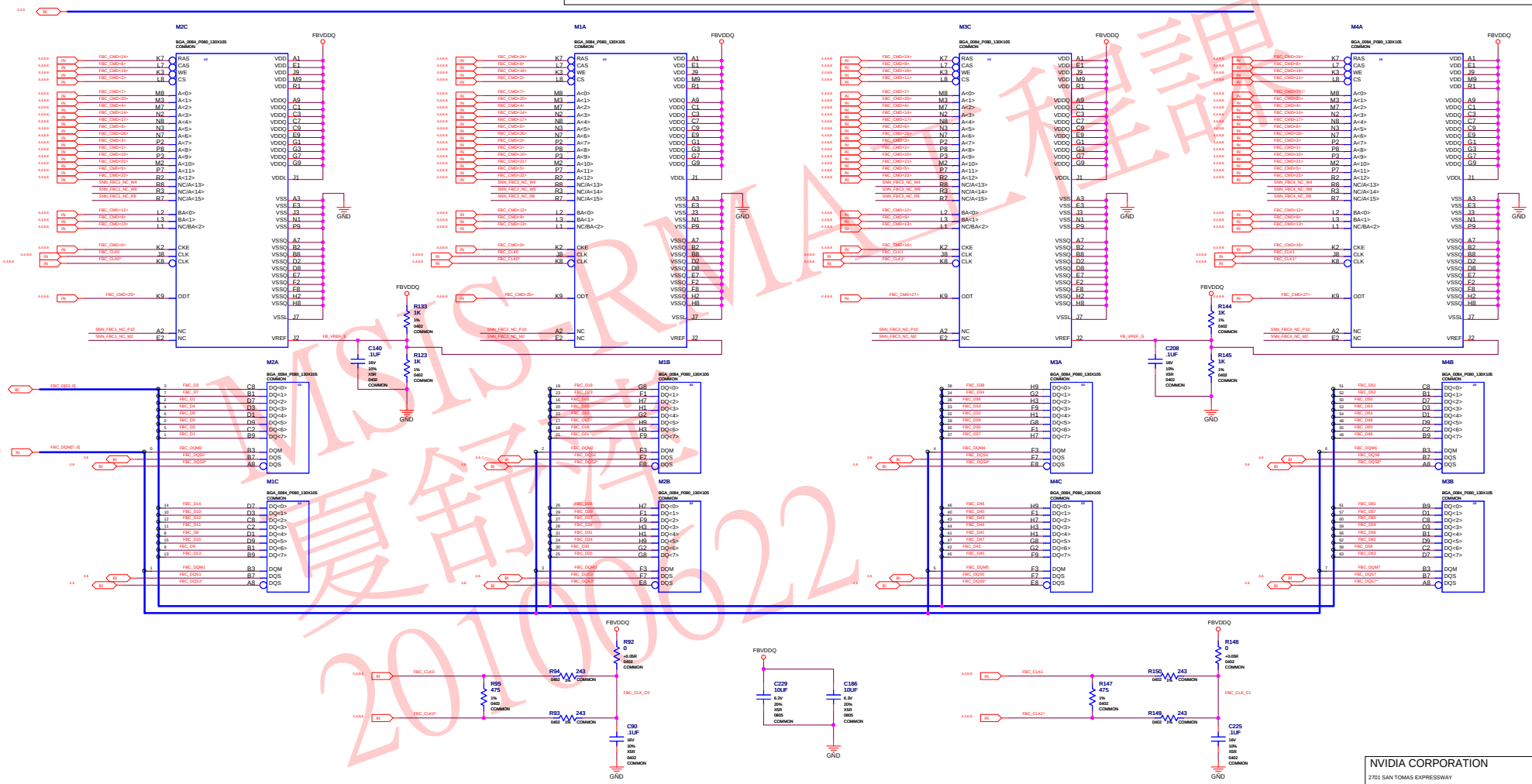

NVISIA 保密信息
2010.06.22

ASSEMBLY	BASE LEVEL GENERIC SCHEMATIC ONLY, COMMON & NO_STUFF ASSEMBLY NOTES AND BOM NOT FINAL
PAGE DETAIL	FBC 16/32MX32 GDDR3 MEMORIES, FBC CMD BUS PU'S, FBC CLK TERMS

ALL NVIDIA DESIGN SPECIFICATIONS, REFERENCE SPECIFICATIONS, REFERENCE BOARDS, FILES, DRAWINGS, DIAGNOSTICS, LISTS AND OTHER DOCUMENTS OR INFORMATION (TOGETHER AND SEPARATELY, 'MATERIALS') ARE BEING PROVIDED 'AS IS'. THE MATERIALS MAY CONTAIN KNOWN AND UNKNOWN VIOLATIONS OR DEVIATIONS OF INDUSTRY STANDARDS AND SPECIFICATIONS. NVIDIA MAKES NO WARRANTIES, EXPRESSED, IMPLIED, STATUTORY OR OTHERWISE WITH RESPECT TO THE MATERIALS OR OTHERWISE, AND EXPRESSLY DISCLAIMS ALL IMPLIED WARRANTIES INCLUDING, WITHOUT LIMITATION, THE WARRANTIES OF DESIGN, OF NONINFRINGEMENT, MERCHANTABILITY OR FITNESS FOR A PARTICULAR PURPOSE, OR ARISING FROM A COURSE OF DEALING, TRADE USAGE, TRADE PRACTICE, OR INDUSTRY STANDARDS.

NVIDIA CORPORATION
2701 SAN TOMAS EXPRESSWAY
SANTA CLARA, CA 95050, USA

NV_PN	600-10626-BASE-100 B		
ID		PAGE	
NAME		DATE	23-OCT-2009

Partition A Memories

GT21x CMD MAP

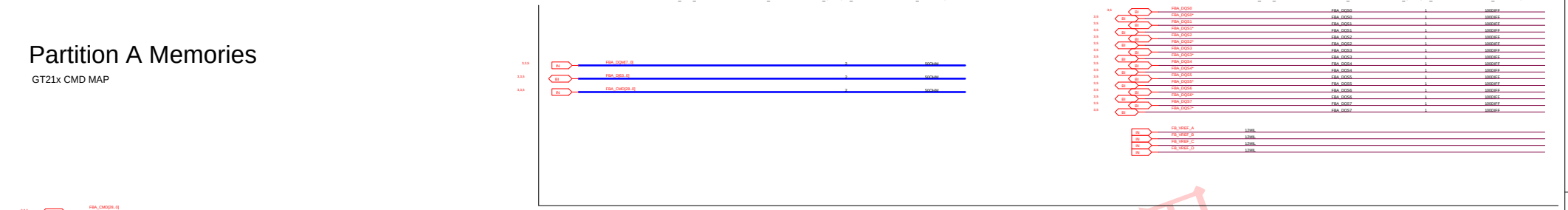

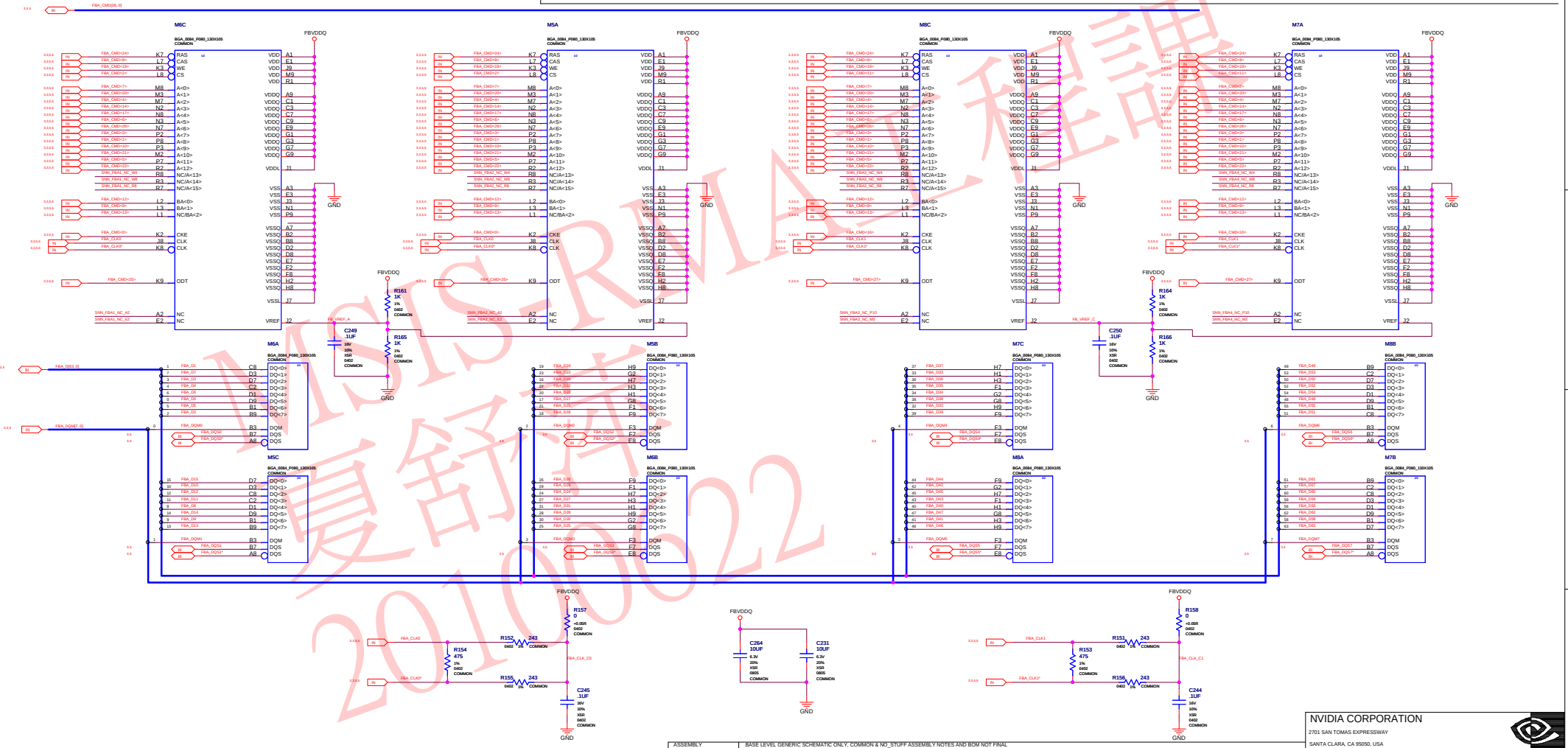

NVIDIA CORPORATION
2701 SAN TOMAS EXPRESSWAY
SANTA CLARA, CA 95050, USA

ALL NVIDIA DESIGN SPECIFICATIONS, REFERENCE SPECIFICATIONS, REFERENCE BOARDS, FILES, DRAWINGS, DIAGNOSTICS, LISTS AND OTHER DOCUMENTS OR INFORMATION (TOGETHER AND SEPARATELY, 'MATERIALS') ARE BEING PROVIDED 'AS IS'. THE MATERIALS MAY CONTAIN KNOWN AND UNKNOWN VIOLATIONS OR DEVIATIONS OF INDUSTRY STANDARDS AND SPECIFICATIONS. NVIDIA MAKES NO WARRANTIES, EXPRESSED, IMPLIED, STATUTORY OR OTHERWISE WITH RESPECT TO THE MATERIALS OR OTHERWISE, AND EXPRESSLY DISCLAIMS ALL IMPLIED WARRANTIES INCLUDING, WITHOUT LIMITATION, THE WARRANTIES OF DESIGN, OF NONINFRINGEMENT, MERCHANTABILITY OR FITNESS FOR A PARTICULAR PURPOSE, OR ARISING FROM A COURSE OF DEALING, TRADE USAGE, TRADE PRACTICE, OR INDUSTRY STANDARDS.

ASSEMBLY	BASE LEVEL GENERIC SCHEMATIC ONLY, COMMON & NO_STUFF ASSEMBLY NOTES AND BOM NOT FINAL
PAGE DETAIL	FBA 16/32Mx32 GDDR3 MEMORIES, FBA COMMAND BUS PUS, FBA CLK TERMS

NV_PN	600-10626-BASE-100 B		
ID		PAGE	
NAME		DATE	23-OCT-2009

MSI-RMA 维修信息
复制请 2010.6.22

Partition C Frame Buffer Interface

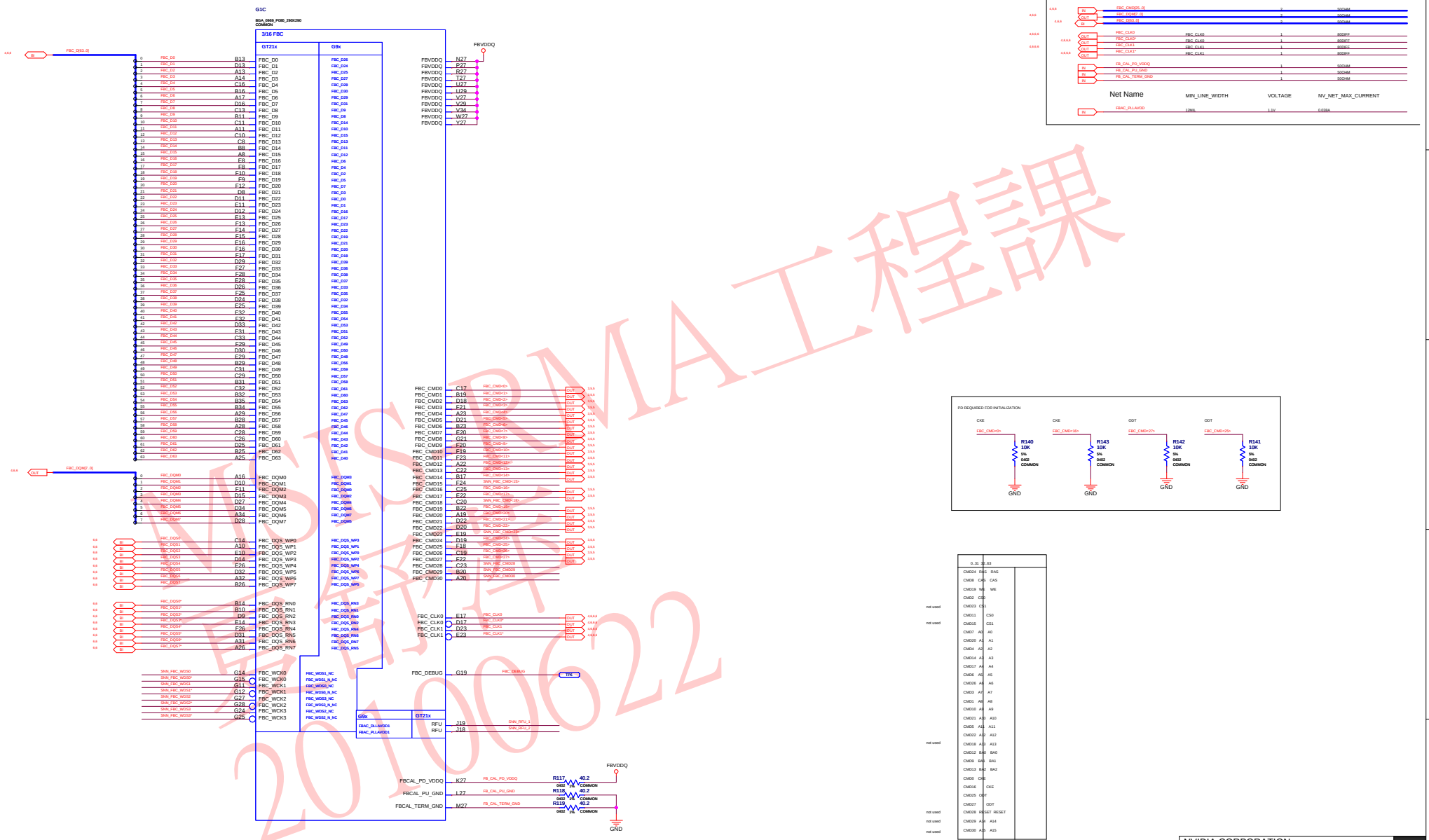

MSI-RMA工程課
長期保存
20100622

ASSEMBLY	BASE LEVEL GENERIC SCHEMATIC ONLY, COMMON & NO_STUFF ASSEMBLY NOTES AND BOM NOT FINAL
PAGE DETAIL	Partition C Frame Buffer Interface

ALL NVIDIA DESIGN SPECIFICATIONS, REFERENCE SPECIFICATIONS, REFERENCE BOARDS, FILES, DRAWINGS, DIAGNOSTICS, LISTS AND OTHER DOCUMENTS OR INFORMATION (TOGETHER AND SEPARATELY, 'MATERIALS') ARE BEING PROVIDED 'AS IS'. THE MATERIALS MAY CONTAIN KNOWN AND UNKNOWN VIOLATIONS OR DEVIATIONS OF INDUSTRY STANDARDS AND SPECIFICATIONS. NVIDIA MAKES NO WARRANTIES, EXPRESSED, IMPLIED, STATUTORY OR OTHERWISE WITH RESPECT TO THE MATERIALS OR OTHERWISE, AND EXPRESSLY DISCLAIMS ALL IMPLIED WARRANTIES INCLUDING, WITHOUT LIMITATION, THE WARRANTIES OF DESIGN, OF NONINFRINGEMENT, MERCHANTABILITY OR FITNESS FOR A PARTICULAR PURPOSE, OR ARISING FROM A COURSE OF DEALING, TRADE USAGE, TRADE PRACTICE, OR INDUSTRY STANDARDS.

NVIDIA CORPORATION
2701 SAN TOMAS EXPRESSWAY
SANTA CLARA, CA 95050, USA

NV_PN	600-10626-BASE-100 B		
ID		PAGE	
NAME		DATE	23-OCT-2009

Partition A Frame Buffer Interface

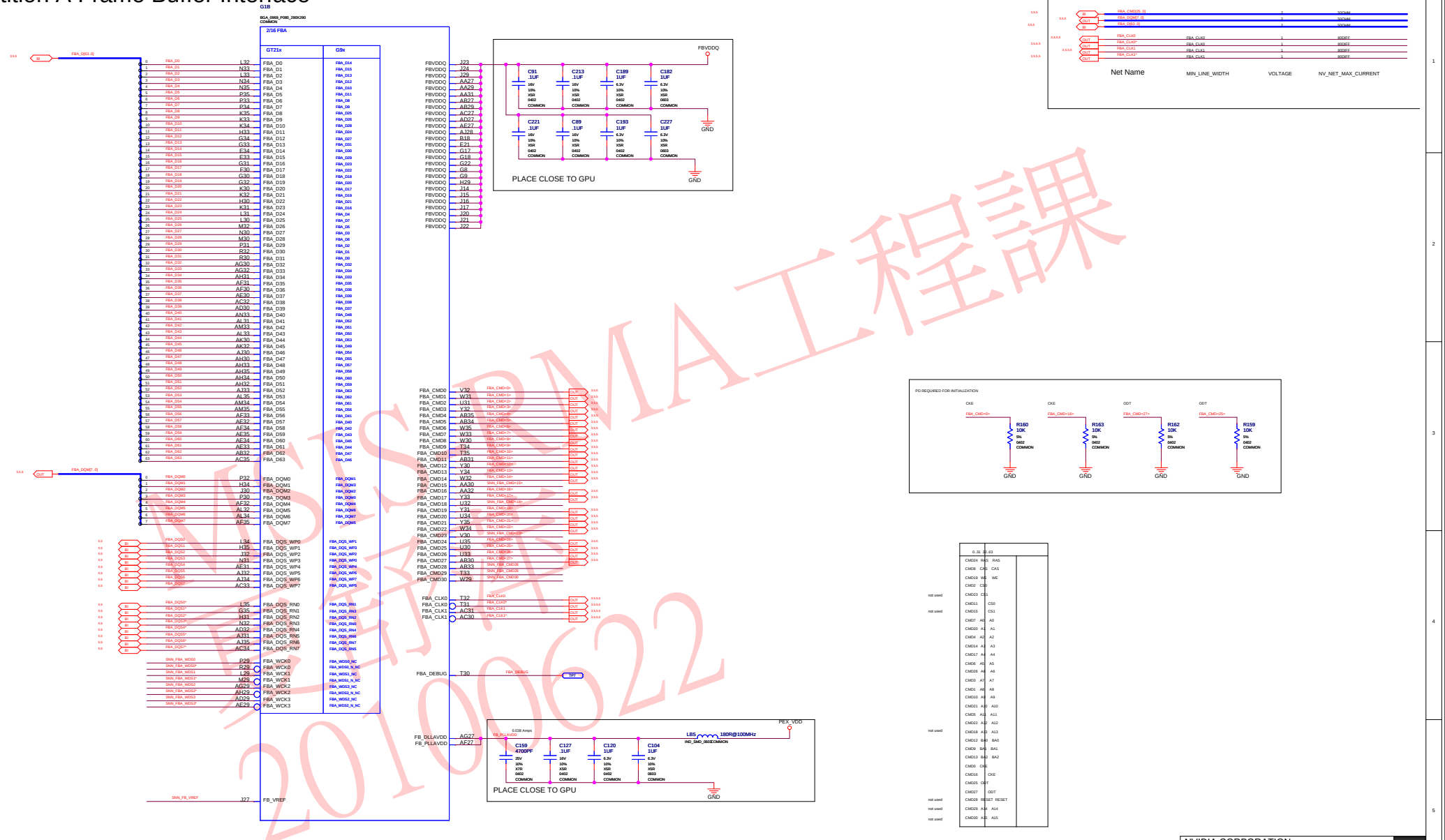

NVIDIA CORPORATION
2701 SAN TOMAS EXPRESSWAY
SANTA CLARA, CA 95050, USA

ASSEMBLY: BASE LEVEL GENERIC SCHEMATIC ONLY, COMMON & NO_STUFF ASSEMBLY NOTES AND BOM NOT FINAL
PAGE DETAIL: Partition A Frame Buffer Interface

NV_PN: 600-10626-BASE-100 B
ID:
PAGE:
NAME:
DATE: 23-OCT-2009

ALL NVIDIA DESIGN SPECIFICATIONS, REFERENCE SPECIFICATIONS, REFERENCE BOARDS, FILES, DRAWINGS, DIAGNOSTICS, LISTS AND OTHER DOCUMENTS OR INFORMATION (TOGETHER AND SEPARATELY, 'MATERIALS') ARE BEING PROVIDED 'AS IS'. THE MATERIALS MAY CONTAIN KNOWN AND UNKNOWN VIOLATIONS OR DEVIATIONS OF INDUSTRY STANDARDS AND SPECIFICATIONS. NVIDIA MAKES NO WARRANTIES, EXPRESSED, IMPLIED, STATUTORY OR OTHERWISE WITH RESPECT TO THE MATERIALS OR OTHERWISE, AND EXPRESSLY DISCLAIMS ALL IMPLIED WARRANTIES INCLUDING, WITHOUT LIMITATION, THE WARRANTIES OF DESIGN, OF NONINFRINGEMENT, MERCHANTABILITY OR FITNESS FOR A PARTICULAR PURPOSE, OR ARISING FROM A COURSE OF DEALING, TRADE USAGE, TRADE PRACTICE, OR INDUSTRY STANDARDS.

PCI Express Interface

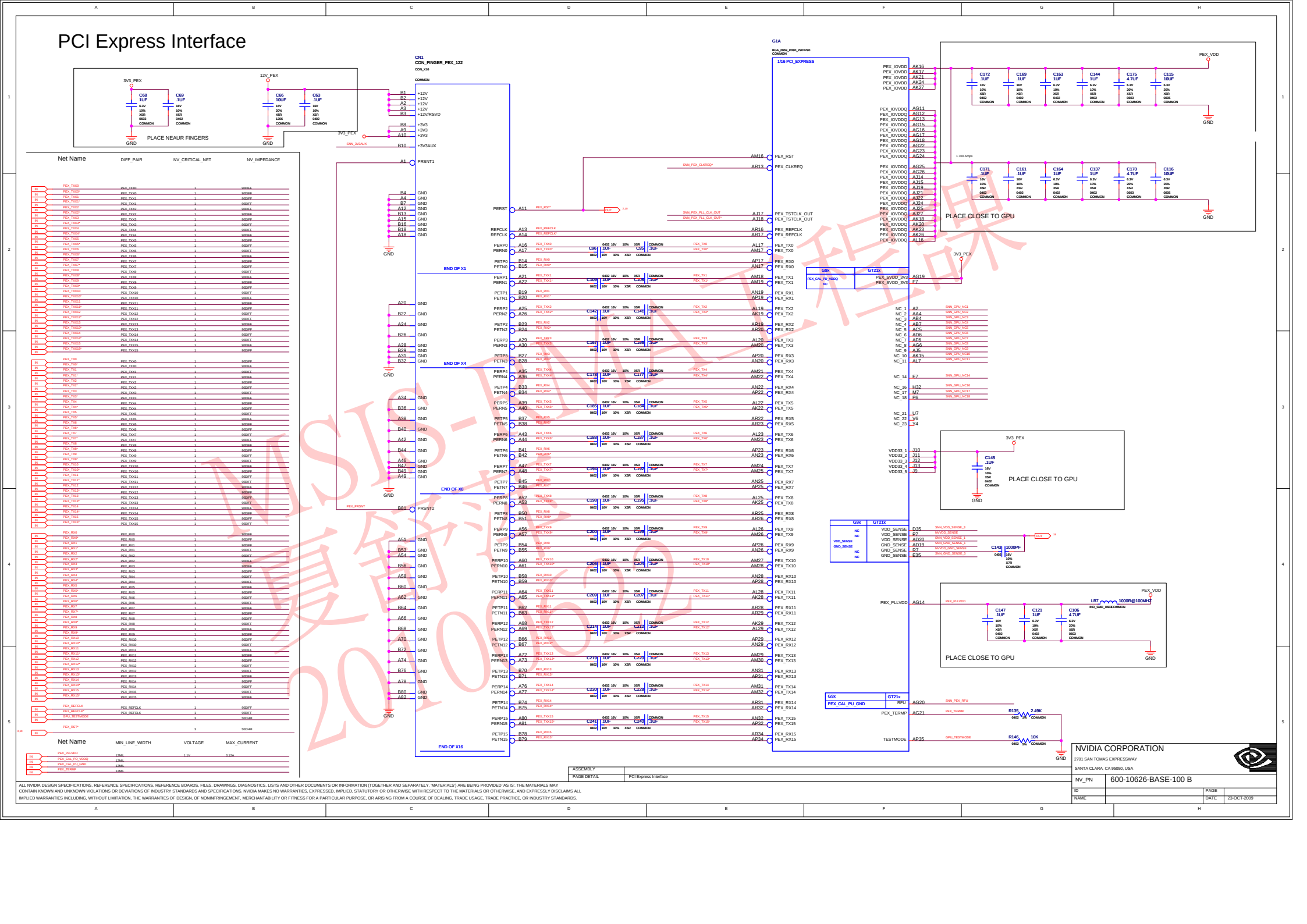

ALL NVIDIA DESIGN SPECIFICATIONS, REFERENCE SPECIFICATIONS, REFERENCE BOARDS, FILES, DRAWINGS, DIAGNOSTICS, LISTS AND OTHER DOCUMENTS OR INFORMATION (TOGETHER AND SEPARATELY, 'MATERIALS') ARE BEING PROVIDED 'AS IS'. THE MATERIALS MAY CONTAIN KNOWN AND UNKNOWN VIOLATIONS OR DEVIATIONS OF INDUSTRY STANDARDS AND SPECIFICATIONS. NVIDIA MAKES NO WARRANTIES, EXPRESSED, IMPLIED, STATUTORY OR OTHERWISE WITH RESPECT TO THE MATERIALS OR OTHERWISE, AND EXPRESSLY DISCLAIMS ALL IMPLIED WARRANTIES INCLUDING, WITHOUT LIMITATION, THE WARRANTIES OF DESIGN, OF NONINFRINGEMENT, MERCHANTABILITY OR FITNESS FOR A PARTICULAR PURPOSE, OR ARISING FROM A COURSE OF DEALING, TRADE USAGE, TRADE PRACTICE, OR INDUSTRY STANDARDS.

ASSEMBLY	
PAGE DETAIL	PCI Express Interface

NVIDIA CORPORATION
2701 SAN TOMAS EXPRESSWAY
SANTA CLARA, CA 95050, USA

NV_PN	600-10626-BASE-100 B		
ID		PAGE	
NAME		DATE	23-OCT-2009

P626-A01: GT216, DDR2 MEMORY 32MX16/64MX16

Page 1: P626-A01 Overview

Page 2: PCI Express Interface

Page 3: Partition A Frame Buffer Interface

Page 4: Partition C Frame Buffer Interface

Page 5: Partition A Memories

Page 6: Partition C Memories

Page 7: Decoupling Caps

Page 8: DACA

Page 9: DACB, DB15 Connector

Page 10: Internal TMDS .. Link A & B

Page 11: HDMI .. Link E

Page 12: IFPC,IFPD

Page 13: MIOA, MIOB Interface

Page 14: Thermal Sensors, GPIOs, JTAG, AND Fan

Page 15: BIOS, HDCP,XTAL AND Mechanical

Page 16: Straps

Page 17: Power Supply I: 5V

Page 18: Power Supply II: FBVDDQ

Page 19: Power Supply III: NVVDD

Page 20: Power Supply: PEXVDD

Page 21: Net Report

Page 22: Net Report

Page 23: Cref Part

2010/01/26 msi modify base on P626

Page 09: Remove all DACB Circuit

Page 11: Changed to HDMI w/ POST footprint

Page 14: Remove JTAG

Page 15: Add optical cross point & HDMI Screw &
PCB & HDMI Fee & Impedance test trace

Page 18: SO-8 Q7(high + low side) changed to SO-8FL Q7 & Q19

Page 18: Remove L7 & Change L8 footprint

Page 18: Add R10 for OCP

Page 19: Change L9 footprint & Co-lay L12

Page 19: Add R15 for OCP

Page 19: R61 changed to 0603 from 0402

MSIS-RMA工程課
夏舒萍
20100622

SKU	VARIANT	NVPN	ASSEMBLY
B	BASE	600-10626-BASE-100	BASE LEVEL GENERIC SCHEMATIC ONLY, COMMON & NO_STUFF ASSEMBLY NOTES AND BOM NOT FINAL
1	SKU0000	600-10626-0000-100	GT216-205, 475MHz/500MHz, 1024MB 64Mx16 DDR2 BGA84 DVI-DL,VGA
2	SKU0001	600-10626-0001-100	GT216-205, 475MHz/500MHz, 1024MB 64MX16 DDR2 BGA84 DVI-DL,HDMI
3	SKU0002	600-10626-0002-100	GT216-205, 475MHz/500MHz, 512MB 32MX16 DDR2 BGA84 DVI-DL,VGA
4	SKU0005	600-10626-0005-100	GT216-305, 600MHz/500MHz, 1024MB 64Mx16 DDR2 BGA84 DVI-DL,VGA
5	<UNDEFINED>	<UNDEFINED>	<UNDEFINED>
6	<UNDEFINED>	<UNDEFINED>	<UNDEFINED>
7	<UNDEFINED>	<UNDEFINED>	<UNDEFINED>
8	<UNDEFINED>	<UNDEFINED>	<UNDEFINED>
9	<UNDEFINED>	<UNDEFINED>	<UNDEFINED>
10	<UNDEFINED>	<UNDEFINED>	<UNDEFINED>
11	<UNDEFINED>	<UNDEFINED>	<UNDEFINED>
12	<UNDEFINED>	<UNDEFINED>	<UNDEFINED>
13	<UNDEFINED>	<UNDEFINED>	<UNDEFINED>
14	<UNDEFINED>	<UNDEFINED>	<UNDEFINED>
15	<UNDEFINED>	<UNDEFINED>	<UNDEFINED>

ASSEMBLY	BASE LEVEL GENERIC SCHEMATIC ONLY, COMMON & NO_STUFF ASSEMBLY NOTES AND BOM NOT FINAL
PAGE DETAIL	P626-A01 Overview

ALL NVIDIA DESIGN SPECIFICATIONS, REFERENCE SPECIFICATIONS, REFERENCE BOARDS, FILES, DRAWINGS, DIAGNOSTICS, LISTS AND OTHER DOCUMENTS OR INFORMATION (TOGETHER AND SEPARATELY, 'MATERIALS') ARE BEING PROVIDED 'AS IS'. THE MATERIALS MAY CONTAIN KNOWN AND UNKNOWN VIOLATIONS OR DEVIATIONS OF INDUSTRY STANDARDS AND SPECIFICATIONS. NVIDIA MAKES NO WARRANTIES, EXPRESSED, IMPLIED, STATUTORY OR OTHERWISE WITH RESPECT TO THE MATERIALS OR OTHERWISE, AND EXPRESSLY DISCLAIMS ALL IMPLIED WARRANTIES INCLUDING, WITHOUT LIMITATION, THE WARRANTIES OF DESIGN, OF NONINFRINGEMENT, MERCHANTABILITY OR FITNESS FOR A PARTICULAR PURPOSE, OR ARISING FROM A COURSE OF DEALING, TRADE USAGE, TRADE PRACTICE, OR INDUSTRY STANDARDS.

NVIDIA CORPORATION
2701 SAN TOMAS EXPRESSWAY
SANTA CLARA, CA 95050, USA

NV_PN	600-10626-BASE-100 B		
ID		PAGE	
NAME		DATE	23-OCT-2009