P2010-A02

75W/100W GK107/GF108 128-BIT GDDR5 in x32/x16 MODE
DVI-I-DL + DVI-D-DL/HDMI +mHDMI/DP

TABLE OF CONTENTS

Page	Description
1	Table of Contents
2	PCI Express
3	GPU Frame Buffer Partition A/B
4	FBA Partition [31..0]
5	FBA Partition [63..32]
6	FBB Partition [31..0]
7	FBB Partition [63..32]
8	GPU FB Decoupling
9	DACA VGA
10	IFPAB TMDS
11	IFPC mHDMI
12	IFPC DP
13	IFPEF TMDS
14	IFPE Long HDMI
15	Core Decoupling,GPU VDD_3V3
16	Misc Interfaces
17	Straps, Thermal, Mechanical
18	Power Supply I: Misc Power
19	Power supply II:PEX_VDD
20	FBVDDQ
21	NVVDD CTRL
22	NVVDD MOS
23	12V EXT / 12V PEX Power Select Circuit

2012/07/05 MS-V280-1.0 changed list

Page	Description
12	Remove colay DP (J1)
14	Remove colay HDMI (J5)
17	Remove 2pin fan control,add 4pin fan control X2,remove all bumper
18	Romove U501 PEX_VDD / U503 PEX_PLL / U3
21	Change FBVDDQ PWM to UP1529
21	Add PSI control circuit
22	Change PWM to 4-phase (ON Semiconductor/NCP5395GMNR2G)
25	Add 6262 voltage control circuit,thermal shutdown circuit and NVVDD power sequence

MSI 00017967 RD(C) 吳楨源 2013030601 (00011601)
CONFIDENTIAL Jonepei(裴亮樂) RMA工程課

MSI	**MICRO-STAR INT'L CO.,LTD**
	MS-V280

Size	Document Description	Rev
Custom	01_Table of Contents	1.0
Date: Tuesday, August 14, 2012	Sheet 1 of 25	

PCI Express

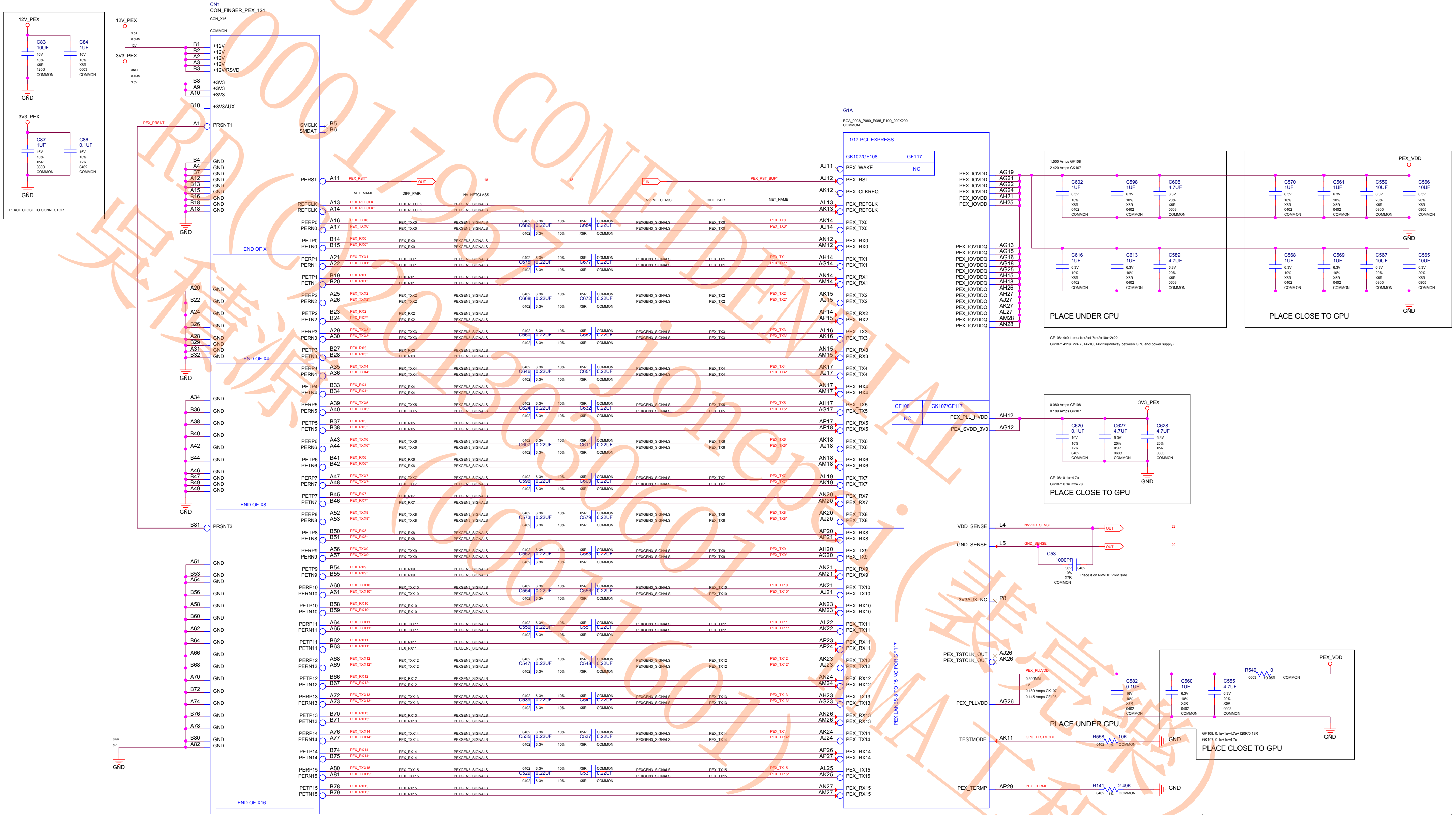
12V_PEX
C83 10UF 16V 10% X5R 1206 COMMON
C84 1UF 16V 10% X5R 0603 COMMON
GND
3V3_PEX
C87 1UF 16V 10% X5R 0603 COMMON
C86 0.1UF 16V 10% X7R 0402 COMMON
PLACE CLOSE TO CONNECTOR
CN1
CON_FINGER_PEX_124
CON_X16
COMMON
5.5A 0.6MM 12V
0.4MM 3.3V
B1 B2 A2 A3 B3 +12V +12V +12V +12V +12V/RSVD
B8 A9 A10 +3V3 +3V3 +3V3
B10 +3V3AUX
PEX_PRSNT
A1 PRSNT1
SMCLK SMDAT B5 B6
PERST A11 PEX_RST* OUT 18
REFCLK A13 A14 PEX_REFCLK PEX_REFCLK*
NET_NAME DIFF_PAIR NV_NETCLASS
PEXGEN3_SIGNALS
PERP0 PERN0 A16 A17 PEX_TXX0 PEX_TXX0*
PETP0 PETN0 B14 B15 PEX_RX0 PEX_RX0*
END OF X1
END OF X4
END OF X8
END OF X16
B81 PRSNT2
8.5A 0V
C682 C684 C675 C677 C668 C672 C660 C662 C646 C651 C624 C632 C607 C611 C596 C600 C573 C579 C562 C563 C554 C556 C550 C551 C547 C548 C539 C541 C535 C537 C529 C531
0.22UF 0402 6.3V 10% X5R COMMON
PEX_RST_BUF* IN 18
G1A
BGA_0908_P080_P085_P100_290X290
COMMON
1/17 PCI_EXPRESS
GK107/GF108 GF117
AJ11 PEX_WAKE NC
AJ12 PEX_RST
AK12 PEX_CLKREQ
AL13 AK13 PEX_REFCLK
PEX LANES 8 TO 15 NC FOR GF117
PEX_IOVDD AG19 AG21 AG22 AG24 AH21 AH25
PEX_IOVDDQ AG13 AG15 AG16 AG18 AG25 AH15 AH18 AH26 AH27 AJ27 AK27 AL27 AM28 AN28
1.500 Amps GF108
2.420 Amps GK107
C602 1UF C598 1UF C606 4.7UF C616 1UF C613 1UF C589 4.7UF
PLACE UNDER GPU
PEX_VDD
C570 1UF C561 1UF C559 10UF C566 10UF C568 1UF C569 1UF C567 10UF C565 10UF
PLACE CLOSE TO GPU
GF108: 4x0.1u+4x1u+2x4.7u+2x10u+2x22u
GK107: 4x1u+2x4.7u+4x10u+4x22u(Midway between GPU and power supply)
GF108 GK107/GF117
NC PEX_PLL_HVDD AH12
PEX_SVDD_3V3 AG12
0.080 Amps GF108
0.189 Amps GK107
3V3_PEX
C620 0.1UF 16V 10% X7R 0402 COMMON
C627 4.7UF 6.3V 20% X5R 0603 COMMON
C628 4.7UF 6.3V 20% X5R 0603 COMMON
GF108: 0.1u+4.7u
GK107: 0.1u+2x4.7u
PLACE CLOSE TO GPU
VDD_SENSE L4 NVVDD_SENSE OUT 22
GND_SENSE L5 GND_SENSE OUT 22
C53 1000PF 50V 10% X7R 0402 COMMON
Place it on NVVDD VRM side
3V3AUX_NC P8
PEX_TSTCLK_OUT AJ26 AK26
PEX_PLLVDD AG26 PEX_PLLVDD
0.300MM 1V
0.130 Amps GK107
0.145 Amps GF108
C582 0.1UF 16V 10% X7R 0402 COMMON
C560 1UF 6.3V 10% X5R 0402 COMMON
C555 4.7UF 6.3V 20% X5R 0603 COMMON
R540 0 0603 +0.05R COMMON
PLACE UNDER GPU
GF108: 0.1u+1u+4.7u+120R/0.18R
GK107: 0.1u+1u+4.7u
PLACE CLOSE TO GPU
TESTMODE AK11 GPU_TESTMODE R558 10K 0402 5% COMMON GND
PEX_TERMP AP29 PEX_TERMP R141 2.49K 0402 1% COMMON GND

MICRO-STAR INT'L CO.,LTD		
MS-V280		
Size Custom	Document Description 01_Table of Contents	Rev 1.0
Date: Tuesday, August 14, 2012	Sheet 2	of 25

GPU Frame Buffer Partition A/B

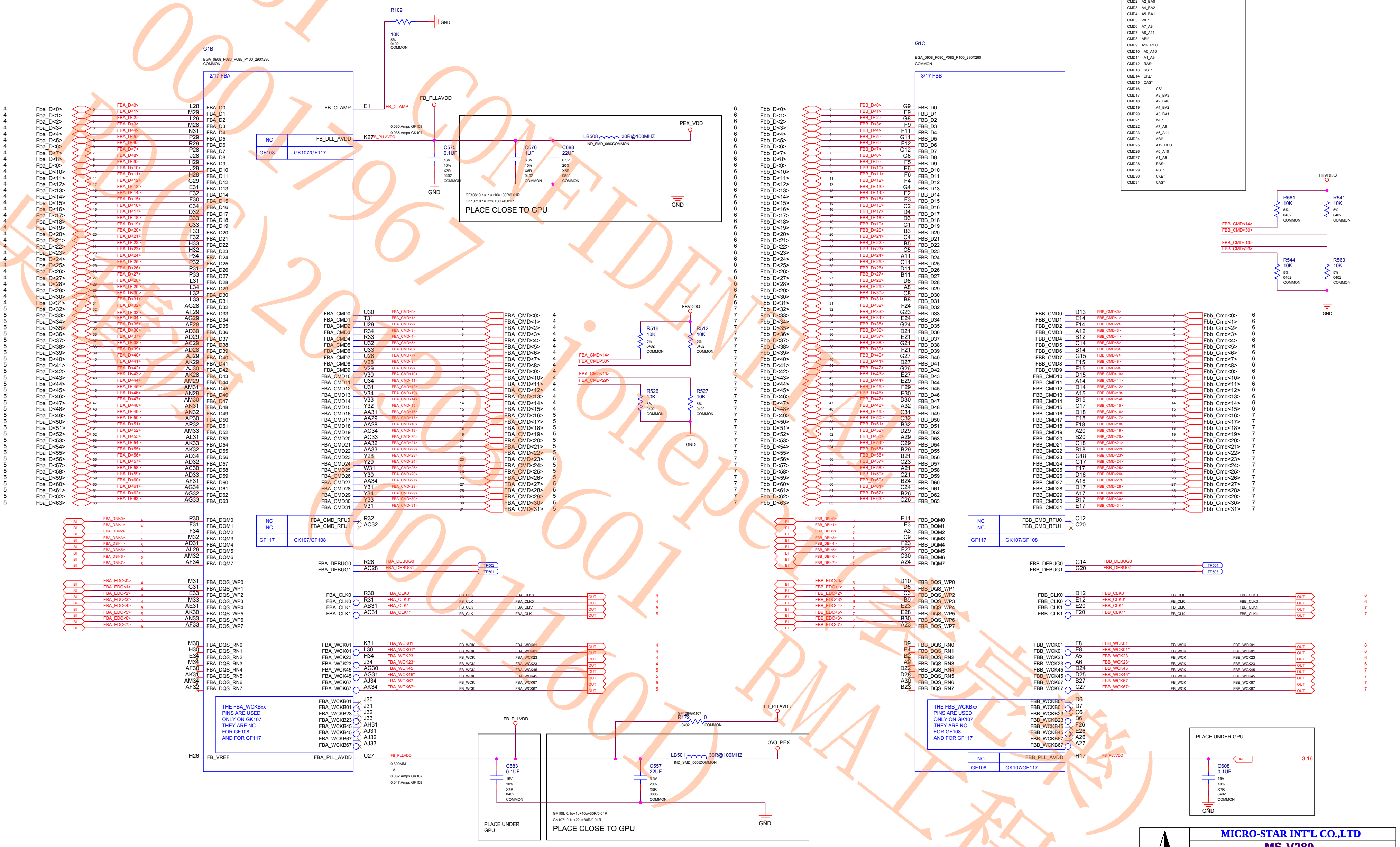
A
B
C
D
E
F
G
H
1
2
3
4
5
G1B
BGA_0908_P080_P085_P100_290X290
COMMON
2/17 FBA
R109
10K
5%
0402
COMMON
GND
FB_CLAMP E1 FB_CLAMP
FB_PLLAVDD
NC FB_DLL_AVDD K27 FB_PLLAVDD
GF108 GK107/GF117
0.030 Amps GF108
0.035 Amps GK107
C575 0.1UF 16V 10% X7R 0402 COMMON
GND
C676 1UF 6.3V 10% X5R 0402 COMMON
C688 22UF 6.3V 20% X5R 0805 COMMON
LB508 30R@100MHZ IND_SMD_0603 COMMON
PEX_VDD
GND
GF108: 0.1u+1u+10u+30R/0.01R
GK107: 0.1u+22u+30R/0.01R
PLACE CLOSE TO GPU
4 Fba_D<0> FBA_D<0> L28 FBA_D0
4 Fba_D<1> FBA_D<1> M29 FBA_D1
4 Fba_D<2> FBA_D<2> L29 FBA_D2
4 Fba_D<3> FBA_D<3> M28 FBA_D3
4 Fba_D<4> FBA_D<4> N31 FBA_D4
4 Fba_D<5> FBA_D<5> P29 FBA_D5
4 Fba_D<6> FBA_D<6> R29 FBA_D6
4 Fba_D<7> FBA_D<7> P28 FBA_D7
4 Fba_D<8> FBA_D<8> J28 FBA_D8
4 Fba_D<9> FBA_D<9> H29 FBA_D9
4 Fba_D<10> FBA_D<10> J29 FBA_D10
4 Fba_D<11> FBA_D<11> H28 FBA_D11
4 Fba_D<12> FBA_D<12> G29 FBA_D12
4 Fba_D<13> FBA_D<13> E31 FBA_D13
4 Fba_D<14> FBA_D<14> E32 FBA_D14
4 Fba_D<15> FBA_D<15> F30 FBA_D15
4 Fba_D<16> FBA_D<16> C34 FBA_D16
4 Fba_D<17> FBA_D<17> D32 FBA_D17
4 Fba_D<18> FBA_D<18> B33 FBA_D18
4 Fba_D<19> FBA_D<19> C33 FBA_D19
4 Fba_D<20> FBA_D<20> F33 FBA_D20
4 Fba_D<21> FBA_D<21> F32 FBA_D21
4 Fba_D<22> FBA_D<22> H33 FBA_D22
4 Fba_D<23> FBA_D<23> H32 FBA_D23
4 Fba_D<24> FBA_D<24> P34 FBA_D24
4 Fba_D<25> FBA_D<25> P32 FBA_D25
4 Fba_D<26> FBA_D<26> P31 FBA_D26
4 Fba_D<27> FBA_D<27> P33 FBA_D27
4 Fba_D<28> FBA_D<28> L31 FBA_D28
4 Fba_D<29> FBA_D<29> L34 FBA_D29
4 Fba_D<30> FBA_D<30> L32 FBA_D30
4 Fba_D<31> FBA_D<31> L33 FBA_D31
5 Fba_D<32> FBA_D<32> AG28 FBA_D32
5 Fba_D<33> FBA_D<33> AF29 FBA_D33
5 Fba_D<34> FBA_D<34> AG29 FBA_D34
5 Fba_D<35> FBA_D<35> AF28 FBA_D35
5 Fba_D<36> FBA_D<36> AD30 FBA_D36
5 Fba_D<37> FBA_D<37> AD29 FBA_D37
5 Fba_D<38> FBA_D<38> AC29 FBA_D38
5 Fba_D<39> FBA_D<39> AD28 FBA_D39
5 Fba_D<40> FBA_D<40> AJ29 FBA_D40
5 Fba_D<41> FBA_D<41> AK29 FBA_D41
5 Fba_D<42> FBA_D<42> AJ30 FBA_D42
5 Fba_D<43> FBA_D<43> AK28 FBA_D43
5 Fba_D<44> FBA_D<44> AM29 FBA_D44
5 Fba_D<45> FBA_D<45> AM31 FBA_D45
5 Fba_D<46> FBA_D<46> AN29 FBA_D46
5 Fba_D<47> FBA_D<47> AM30 FBA_D47
5 Fba_D<48> FBA_D<48> AN31 FBA_D48
5 Fba_D<49> FBA_D<49> AN32 FBA_D49
5 Fba_D<50> FBA_D<50> AP30 FBA_D50
5 Fba_D<51> FBA_D<51> AP32 FBA_D51
5 Fba_D<52> FBA_D<52> AM33 FBA_D52
5 Fba_D<53> FBA_D<53> AL31 FBA_D53
5 Fba_D<54> FBA_D<54> AK33 FBA_D54
5 Fba_D<55> FBA_D<55> AK32 FBA_D55
5 Fba_D<56> FBA_D<56> AD34 FBA_D56
5 Fba_D<57> FBA_D<57> AD32 FBA_D57
5 Fba_D<58> FBA_D<58> AC30 FBA_D58
5 Fba_D<59> FBA_D<59> AD33 FBA_D59
5 Fba_D<60> FBA_D<60> AF31 FBA_D60
5 Fba_D<61> FBA_D<61> AG34 FBA_D61
5 Fba_D<62> FBA_D<62> AG32 FBA_D62
5 Fba_D<63> FBA_D<63> AG33 FBA_D63
FBA_CMD0 U30 FBA_CMD<0> FBA_CMD<0> 4
FBA_CMD1 T31 FBA_CMD<1> FBA_CMD<1> 4
FBA_CMD2 U29 FBA_CMD<2> FBA_CMD<2> 4
FBA_CMD3 R34 FBA_CMD<3> FBA_CMD<3> 4
FBA_CMD4 R33 FBA_CMD<4> FBA_CMD<4> 4
FBA_CMD5 U32 FBA_CMD<5> FBA_CMD<5> 4
FBA_CMD6 U33 FBA_CMD<6> FBA_CMD<6> 4
FBA_CMD7 U28 FBA_CMD<7> FBA_CMD<7> 4
FBA_CMD8 V28 FBA_CMD<8> FBA_CMD<8> 4
FBA_CMD9 V29 FBA_CMD<9> FBA_CMD<9> 4
FBA_CMD10 V30 FBA_CMD<10> FBA_CMD<10> 4
FBA_CMD11 U34 FBA_CMD<11> FBA_CMD<11> 4
FBA_CMD12 U31 FBA_CMD<12> FBA_CMD<12> 4
FBA_CMD13 V34 FBA_CMD<13> FBA_CMD<13> 4
FBA_CMD14 V33 FBA_CMD<14> FBA_CMD<14> 4
FBA_CMD15 Y32 FBA_CMD<15> FBA_CMD<15> 4
FBA_CMD16 AA31 FBA_CMD<16> FBA_CMD<16> 5
FBA_CMD17 AA29 FBA_CMD<17> FBA_CMD<17> 5
FBA_CMD18 AA28 FBA_CMD<18> FBA_CMD<18> 5
FBA_CMD19 AC34 FBA_CMD<19> FBA_CMD<19> 5
FBA_CMD20 AC33 FBA_CMD<20> FBA_CMD<20> 5
FBA_CMD21 AA32 FBA_CMD<21> FBA_CMD<21> 5
FBA_CMD22 AA33 FBA_CMD<22> FBA_CMD<22> 5
FBA_CMD23 Y28 FBA_CMD<23> FBA_CMD<23> 5
FBA_CMD24 Y29 FBA_CMD<24> FBA_CMD<24> 5
FBA_CMD25 W31 FBA_CMD<25> FBA_CMD<25> 5
FBA_CMD26 Y30 FBA_CMD<26> FBA_CMD<26> 5
FBA_CMD27 AA34 FBA_CMD<27> FBA_CMD<27> 5
FBA_CMD28 Y31 FBA_CMD<28> FBA_CMD<28> 5
FBA_CMD29 Y34 FBA_CMD<29> FBA_CMD<29> 5
FBA_CMD30 Y33 FBA_CMD<30> FBA_CMD<30> 5
FBA_CMD31 V31 FBA_CMD<31> FBA_CMD<31> 5
FBVDDQ
R516 10K 5% 0402 COMMON
R512 10K 5% 0402 COMMON
FBA_CMD<14>
FBA_CMD<30>
FBA_CMD<13>
FBA_CMD<29>
R526 10K 5% 0402 COMMON
R527 10K 5% 0402 COMMON
GND
BI FBA_DBI<0> 4 P30 FBA_DQM0
BI FBA_DBI<1> 4 F31 FBA_DQM1
BI FBA_DBI<2> 4 F34 FBA_DQM2
BI FBA_DBI<3> 4 M32 FBA_DQM3
BI FBA_DBI<4> 5 AD31 FBA_DQM4
BI FBA_DBI<5> 5 AL29 FBA_DQM5
BI FBA_DBI<6> 5 AM32 FBA_DQM6
BI FBA_DBI<7> 5 AF34 FBA_DQM7
NC FBA_CMD_RFU0 R32
NC FBA_CMD_RFU1 AC32
GF117 GK107/GF108
FBA_DEBUG0 R28 FBA_DEBUG0 TP502
FBA_DEBUG1 AC28 FBA_DEBUG1 TP501
BI FBA_EDC<0> 4 M31 FBA_DQS_WP0
BI FBA_EDC<1> 4 G31 FBA_DQS_WP1
BI FBA_EDC<2> 4 E33 FBA_DQS_WP2
BI FBA_EDC<3> 4 M33 FBA_DQS_WP3
BI FBA_EDC<4> 5 AE31 FBA_DQS_WP4
BI FBA_EDC<5> 5 AK30 FBA_DQS_WP5
BI FBA_EDC<6> 5 AN33 FBA_DQS_WP6
BI FBA_EDC<7> 5 AF33 FBA_DQS_WP7
FBA_CLK0 R30 FBA_CLK0 FB_CLK FBA_CLK0 OUT 4
FBA_CLK0 R31 FBA_CLK0* FB_CLK FBA_CLK0 OUT 4
FBA_CLK1 AB31 FBA_CLK1 FB_CLK FBA_CLK1 OUT 5
FBA_CLK1 AC31 FBA_CLK1* FB_CLK FBA_CLK1 OUT 5
M30 FBA_DQS_RN0
H30 FBA_DQS_RN1
E34 FBA_DQS_RN2
M34 FBA_DQS_RN3
AF30 FBA_DQS_RN4
AK31 FBA_DQS_RN5
AM34 FBA_DQS_RN6
AF32 FBA_DQS_RN7
FBA_WCK01 K31 FBA_WCK01 FB_WCK FBA_WCK01 OUT 4
FBA_WCK01 L30 FBA_WCK01* FB_WCK FBA_WCK01 OUT 4
FBA_WCK23 H34 FBA_WCK23 FB_WCK FBA_WCK23 OUT 4
FBA_WCK23 J34 FBA_WCK23* FB_WCK FBA_WCK23 OUT 4
FBA_WCK45 AG30 FBA_WCK45 FB_WCK FBA_WCK45 OUT 5
FBA_WCK45 AG31 FBA_WCK45* FB_WCK FBA_WCK45 OUT 5
FBA_WCK67 AJ34 FBA_WCK67 FB_WCK FBA_WCK67 OUT 5
FBA_WCK67 AK34 FBA_WCK67* FB_WCK FBA_WCK67 OUT 5
THE FBA_WCKBxx PINS ARE USED ONLY ON GK107 THEY ARE NC FOR GF108 AND FOR GF117
FBA_WCKB01 J30
FBA_WCKB01 J31
FBA_WCKB23 J32
FBA_WCKB23 J33
FBA_WCKB45 AH31
FBA_WCKB45 AJ31
FBA_WCKB67 AJ32
FBA_WCKB67 AJ33
H26 FB_VREF
FBA_PLL_AVDD U27 FB_PLLVDD
0.300MM
1V
0.062 Amps GK107
0.047 Amps GF108
FB_PLLVDD
C583 0.1UF 16V 10% X7R 0402 COMMON
PLACE UNDER GPU
FB_PLLAVDD
GF108/GK107 R172 0 0402 COMMON
3V3_PEX
LB501 30R@100MHZ IND_SMD_0603 COMMON
C557 22UF 6.3V 20% X5R 0805 COMMON
GF108: 0.1u+1u+10u+30R/0.01R
GK107: 0.1u+22u+30R/0.01R
PLACE CLOSE TO GPU
GND
G1C
BGA_0908_P080_P085_P100_290X290
COMMON
3/17 FBB
6 Fbb_D<0> FBB_D<0> G9 FBB_D0
6 Fbb_D<1> FBB_D<1> E9 FBB_D1
6 Fbb_D<2> FBB_D<2> G8 FBB_D2
6 Fbb_D<3> FBB_D<3> F9 FBB_D3
6 Fbb_D<4> FBB_D<4> F11 FBB_D4
6 Fbb_D<5> FBB_D<5> G11 FBB_D5
6 Fbb_D<6> FBB_D<6> F12 FBB_D6
6 Fbb_D<7> FBB_D<7> G12 FBB_D7
6 Fbb_D<8> FBB_D<8> G6 FBB_D8
6 Fbb_D<9> FBB_D<9> F5 FBB_D9
6 Fbb_D<10> FBB_D<10> E6 FBB_D10
6 Fbb_D<11> FBB_D<11> F6 FBB_D11
6 Fbb_D<12> FBB_D<12> F4 FBB_D12
6 Fbb_D<13> FBB_D<13> G4 FBB_D13
6 Fbb_D<14> FBB_D<14> E2 FBB_D14
6 Fbb_D<15> FBB_D<15> F3 FBB_D15
6 Fbb_D<16> FBB_D<16> C2 FBB_D16
6 Fbb_D<17> FBB_D<17> D4 FBB_D17
6 Fbb_D<18> FBB_D<18> D3 FBB_D18
6 Fbb_D<19> FBB_D<19> C1 FBB_D19
6 Fbb_D<20> FBB_D<20> B3 FBB_D20
6 Fbb_D<21> FBB_D<21> C4 FBB_D21
6 Fbb_D<22> FBB_D<22> B5 FBB_D22
6 Fbb_D<23> FBB_D<23> C5 FBB_D23
6 Fbb_D<24> FBB_D<24> A11 FBB_D24
6 Fbb_D<25> FBB_D<25> C11 FBB_D25
6 Fbb_D<26> FBB_D<26> D11 FBB_D26
6 Fbb_D<27> FBB_D<27> B11 FBB_D27
6 Fbb_D<28> FBB_D<28> D8 FBB_D28
6 Fbb_D<29> FBB_D<29> A8 FBB_D29
6 Fbb_D<30> FBB_D<30> C8 FBB_D30
6 Fbb_D<31> FBB_D<31> B8 FBB_D31
7 Fbb_D<32> FBB_D<32> F24 FBB_D32
7 Fbb_D<33> FBB_D<33> G23 FBB_D33
7 Fbb_D<34> FBB_D<34> E24 FBB_D34
7 Fbb_D<35> FBB_D<35> G24 FBB_D35
7 Fbb_D<36> FBB_D<36> D21 FBB_D36
7 Fbb_D<37> FBB_D<37> E21 FBB_D37
7 Fbb_D<38> FBB_D<38> G21 FBB_D38
7 Fbb_D<39> FBB_D<39> F21 FBB_D39
7 Fbb_D<40> FBB_D<40> G27 FBB_D40
7 Fbb_D<41> FBB_D<41> D27 FBB_D41
7 Fbb_D<42> FBB_D<42> G26 FBB_D42
7 Fbb_D<43> FBB_D<43> E27 FBB_D43
7 Fbb_D<44> FBB_D<44> E29 FBB_D44
7 Fbb_D<45> FBB_D<45> F29 FBB_D45
7 Fbb_D<46> FBB_D<46> E30 FBB_D46
7 Fbb_D<47> FBB_D<47> D30 FBB_D47
7 Fbb_D<48> FBB_D<48> A32 FBB_D48
7 Fbb_D<49> FBB_D<49> C31 FBB_D49
7 Fbb_D<50> FBB_D<50> C32 FBB_D50
7 Fbb_D<51> FBB_D<51> B32 FBB_D51
7 Fbb_D<52> FBB_D<52> D29 FBB_D52
7 Fbb_D<53> FBB_D<53> A29 FBB_D53
7 Fbb_D<54> FBB_D<54> C29 FBB_D54
7 Fbb_D<55> FBB_D<55> B29 FBB_D55
7 Fbb_D<56> FBB_D<56> B21 FBB_D56
7 Fbb_D<57> FBB_D<57> C23 FBB_D57
7 Fbb_D<58> FBB_D<58> A21 FBB_D58
7 Fbb_D<59> FBB_D<59> C21 FBB_D59
7 Fbb_D<60> FBB_D<60> B24 FBB_D60
7 Fbb_D<61> FBB_D<61> C24 FBB_D61
7 Fbb_D<62> FBB_D<62> B26 FBB_D62
7 Fbb_D<63> FBB_D<63> C26 FBB_D63
FBB_CMD0 D13 FBB_CMD<0> Fbb_Cmd<0> 6
FBB_CMD1 E14 FBB_CMD<1> Fbb_Cmd<1> 6
FBB_CMD2 F14 FBB_CMD<2> Fbb_Cmd<2> 6
FBB_CMD3 A12 FBB_CMD<3> Fbb_Cmd<3> 6
FBB_CMD4 B12 FBB_CMD<4> Fbb_Cmd<4> 6
FBB_CMD5 C14 FBB_CMD<5> Fbb_Cmd<5> 6
FBB_CMD6 B14 FBB_CMD<6> Fbb_Cmd<6> 6
FBB_CMD7 G15 FBB_CMD<7> Fbb_Cmd<7> 6
FBB_CMD8 F15 FBB_CMD<8> Fbb_Cmd<8> 6
FBB_CMD9 E15 FBB_CMD<9> Fbb_Cmd<9> 6
FBB_CMD10 D15 FBB_CMD<10> Fbb_Cmd<10> 6
FBB_CMD11 A14 FBB_CMD<11> Fbb_Cmd<11> 6
FBB_CMD12 D14 FBB_CMD<12> Fbb_Cmd<12> 6
FBB_CMD13 A15 FBB_CMD<13> Fbb_Cmd<13> 6
FBB_CMD14 B15 FBB_CMD<14> Fbb_Cmd<14> 6
FBB_CMD15 C17 FBB_CMD<15> Fbb_Cmd<15> 6
FBB_CMD16 D18 FBB_CMD<16> Fbb_Cmd<16> 7
FBB_CMD17 E18 FBB_CMD<17> Fbb_Cmd<17> 7
FBB_CMD18 F18 FBB_CMD<18> Fbb_Cmd<18> 7
FBB_CMD19 A20 FBB_CMD<19> Fbb_Cmd<19> 7
FBB_CMD20 B20 FBB_CMD<20> Fbb_Cmd<20> 7
FBB_CMD21 C18 FBB_CMD<21> Fbb_Cmd<21> 7
FBB_CMD22 B18 FBB_CMD<22> Fbb_Cmd<22> 7
FBB_CMD23 G18 FBB_CMD<23> Fbb_Cmd<23> 7
FBB_CMD24 G17 FBB_CMD<24> Fbb_Cmd<24> 7
FBB_CMD25 F17 FBB_CMD<25> Fbb_Cmd<25> 7
FBB_CMD26 D16 FBB_CMD<26> Fbb_Cmd<26> 7
FBB_CMD27 A18 FBB_CMD<27> Fbb_Cmd<27> 7
FBB_CMD28 D17 FBB_CMD<28> Fbb_Cmd<28> 7
FBB_CMD29 A17 FBB_CMD<29> Fbb_Cmd<29> 7
FBB_CMD30 B17 FBB_CMD<30> Fbb_Cmd<30> 7
FBB_CMD31 E17 FBB_CMD<31> Fbb_Cmd<31> 7
FBVDDQ
R561 10K 5% 0402 COMMON
R541 10K 5% 0402 COMMON
FBB_CMD<14>
FBB_CMD<30>
FBB_CMD<13>
FBB_CMD<29>
R544 10K 5% 0402 COMMON
R563 10K 5% 0402 COMMON
GND
BI FBB_DBI<0> 6 E11 FBB_DQM0
BI FBB_DBI<1> 6 E3 FBB_DQM1
BI FBB_DBI<2> 6 A3 FBB_DQM2
BI FBB_DBI<3> 6 C9 FBB_DQM3
BI FBB_DBI<4> 7 F23 FBB_DQM4
BI FBB_DBI<5> 7 F27 FBB_DQM5
BI FBB_DBI<6> 7 C30 FBB_DQM6
BI FBB_DBI<7> 7 A24 FBB_DQM7
NC FBB_CMD_RFU0 C12
NC FBB_CMD_RFU1 C20
GF117 GK107/GF108
FBB_DEBUG0 G14 FBB_DEBUG0 TP504
FBB_DEBUG1 G20 FBB_DEBUG1 TP503
BI FBB_EDC<0> 6 D10 FBB_DQS_WP0
BI FBB_EDC<1> 6 D5 FBB_DQS_WP1
BI FBB_EDC<2> 6 C3 FBB_DQS_WP2
BI FBB_EDC<3> 6 B9 FBB_DQS_WP3
BI FBB_EDC<4> 7 E23 FBB_DQS_WP4
BI FBB_EDC<5> 7 E28 FBB_DQS_WP5
BI FBB_EDC<6> 7 B30 FBB_DQS_WP6
BI FBB_EDC<7> 7 A23 FBB_DQS_WP7
FBB_CLK0 D12 FBB_CLK0 FB_CLK FBB_CLK0 OUT 6
FBB_CLK0 E12 FBB_CLK0* FB_CLK FBB_CLK0 OUT 6
FBB_CLK1 E20 FBB_CLK1 FB_CLK FBB_CLK1 OUT 7
FBB_CLK1 F20 FBB_CLK1* FB_CLK FBB_CLK1 OUT 7
D9 FBB_DQS_RN0
E4 FBB_DQS_RN1
B2 FBB_DQS_RN2
A9 FBB_DQS_RN3
D22 FBB_DQS_RN4
D28 FBB_DQS_RN5
A30 FBB_DQS_RN6
B23 FBB_DQS_RN7
FBB_WCK01 F8 FBB_WCK01 FB_WCK FBB_WCK01 OUT 6
FBB_WCK01 E8 FBB_WCK01* FB_WCK FBB_WCK01 OUT 6
FBB_WCK23 A5 FBB_WCK23 FB_WCK FBB_WCK23 OUT 6
FBB_WCK23 A6 FBB_WCK23* FB_WCK FBB_WCK23 OUT 6
FBB_WCK45 D24 FBB_WCK45 FB_WCK FBB_WCK45 OUT 7
FBB_WCK45 D25 FBB_WCK45* FB_WCK FBB_WCK45 OUT 7
FBB_WCK67 B27 FBB_WCK67 FB_WCK FBB_WCK67 OUT 7
FBB_WCK67 C27 FBB_WCK67* FB_WCK FBB_WCK67 OUT 7
THE FBB_WCKBxx PINS ARE USED ONLY ON GK107 THEY ARE NC FOR GF108 AND FOR GF117
FBB_WCKB01 D6
FBB_WCKB01 D7
FBB_WCKB23 C6
FBB_WCKB23 B6
FBB_WCKB45 F26
FBB_WCKB45 E26
FBB_WCKB67 A26
FBB_WCKB67 A27
NC FBB_PLL_AVDD H17 FB_PLLVDD
GF108 GK107/GF117
PLACE UNDER GPU
IN 3,16
C608 0.1UF 16V 10% X7R 0402 COMMON
GND

GDDR5_BGA170_MIRR COMMAND MAP

	0..31	32..63
CMD0	CS*	
CMD1	A3_BA3	
CMD2	A2_BA0	
CMD3	A4_BA2	
CMD4	A5_BA1	
CMD5	WE*	
CMD6	A7_A8	
CMD7	A6_A11	
CMD8	ABI*	
CMD9	A12_RFU	
CMD10	A0_A10	
CMD11	A1_A9	
CMD12	RAS*	
CMD13	RST*	
CMD14	CKE*	
CMD15	CAS*	
CMD16		CS*
CMD17		A3_BA3
CMD18		A2_BA0
CMD19		A4_BA2
CMD20		A5_BA1
CMD21		WE*
CMD22		A7_A8
CMD23		A6_A11
CMD24		ABI*
CMD25		A12_RFU
CMD26		A0_A10
CMD27		A1_A9
CMD28		RAS*
CMD29		RST*
CMD30		CKE*
CMD31		CAS*

MICRO-STAR INT'L CO.,LTD

MS-V280

Size	Document Description	Rev
Custom	01_Table of Contents	1.0

Date: Tuesday, August 14, 2012 Sheet 3 of 25

Page 4:FBA Partition [31..0]

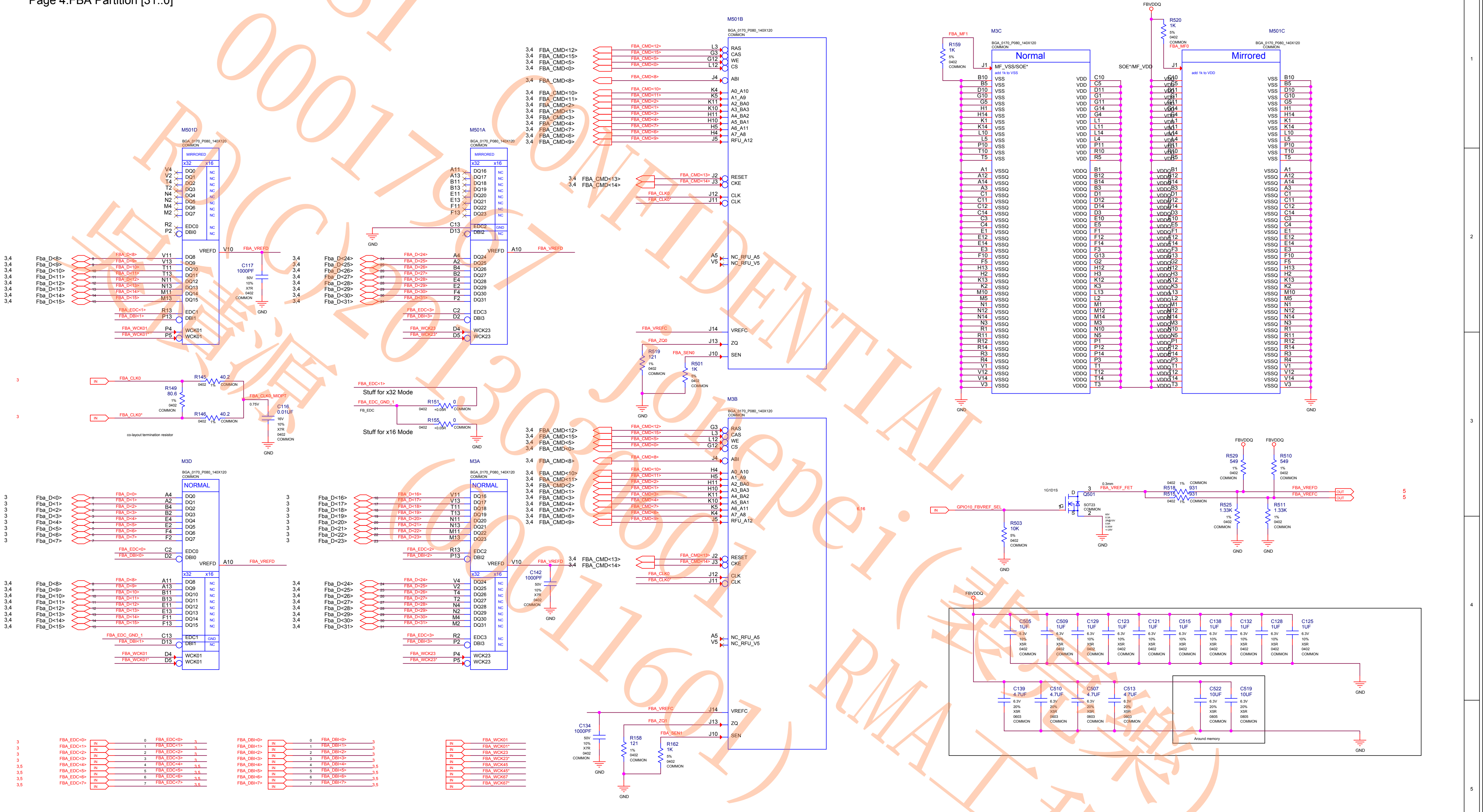
M501B
BGA_0170_P080_140X120 COMMON
RAS
CAS
WE
CS
ABI
A0_A10
A1_A9
A2_BA0
A3_BA3
A4_BA2
A5_BA1
A6_A11
A7_A8
RFU_A12
RESET
CKE
CLK
NC_RFU_A5
NC_RFU_V5
VREFC
ZQ
SEN
FBA_CMD<12>
FBA_CMD<15>
FBA_CMD<5>
FBA_CMD<0>
FBA_CMD<8>
FBA_CMD<10>
FBA_CMD<11>
FBA_CMD<2>
FBA_CMD<1>
FBA_CMD<3>
FBA_CMD<4>
FBA_CMD<7>
FBA_CMD<6>
FBA_CMD<9>
FBA_CMD<13>
FBA_CMD<14>
FBA_CLK0
FBA_CLK0*
FBA_VREFC
FBA_ZQ0
FBA_SEN0
R519 121 1% 0402 COMMON
R501 1K 5% 0402 COMMON
M501D
MIRRORED
M501A
M3D
M3A
NORMAL
x32
x16
NC
GND
DQ0
DQ1
DQ2
DQ3
DQ4
DQ5
DQ6
DQ7
EDC0
DBI0
VREFD
EDC1
DBI1
WCK01
EDC2
DBI2
EDC3
DBI3
WCK23
FBA_VREFD
Fba_D<0>
Fba_D<31>
FBA_EDC<1>
FBA_DBI<1>
FBA_WCK01
FBA_WCK01*
FBA_EDC<3>
FBA_DBI<3>
FBA_WCK23
FBA_WCK23*
C117 1000PF 50V 10% X7R 0402 COMMON
FBA_CLK0
FBA_CLK0*
R145 40.2 0402 1% COMMON
R149 80.6 1% 0402 COMMON
R146 40.2 0402 1% COMMON
FBA_CLK0_MIDPT
0.75V
C116 0.01UF 16V 10% X7R 0402 COMMON
co-layout termination resistor
FBA_EDC<1>
Stuff for x32 Mode
FBA_EDC_GND_1
FB_EDC
R151 0 0402 +0.05R COMMON
R155 0 0402 +0.05R COMMON
Stuff for x16 Mode
FBA_EDC_GND_1
M3B
FBA_ZQ1
FBA_SEN1
R158 121 1% 0402 COMMON
R162 1K 5% 0402 COMMON
C134 1000PF 50V 10% X7R 0402 COMMON
C142 1000PF 50V 10% X7R 0402 COMMON
6,16
M3C
Normal
MF_VSS/SOE*
add 1k to VSS
FBA_MF1
R159 1K 5% 0402 COMMON
VSS
VDD
VSSQ
VDDQ
SOE*/MF_VDD
FBVDDQ
R520 1K 5% 0402 COMMON
FBA_MF0
M501C
Mirrored
add 1k to VDD
GPIO10_FBVREF_SEL
R503 10K 5% 0402 COMMON
1G1D1S
Q501 SOT23 COMMON
60V 0.3A 2R@10V 0.8A 0.35W +/-20V
0.3mm
FBA_VREF_FET
R518 931 0402 1% COMMON
R515 931 0402 1% COMMON
R529 549 1% 0402 COMMON
R510 549 1% 0402 COMMON
R525 1.33K 1% 0402 COMMON
R511 1.33K 1% 0402 COMMON
FBA_VREFD
FBA_VREFC
OUT
C505 1UF
C509 1UF
C129 1UF
C123 1UF
C121 1UF
C515 1UF
C138 1UF
C132 1UF
C128 1UF
C125 1UF
6.3V 10% X5R 0402 COMMON
C139 4.7UF
C510 4.7UF
C507 4.7UF
C513 4.7UF
6.3V 20% X5R 0603 COMMON
C522 10UF
C519 10UF
6.3V 20% X5R 0805 COMMON
Around memory
FBA_EDC<0>
FBA_EDC<7>
FBA_DBI<0>
FBA_DBI<7>
FBA_WCK45
FBA_WCK45*
FBA_WCK67
FBA_WCK67*
IN
GND

MICRO-STAR INT'L CO.,LTD

MS-V280

Size	Document Description	Rev
Custom	01_Table of Contents	1.0

Date: Tuesday, August 14, 2012 | Sheet 4 of 25

Page 5:FBA Partition[63..32]

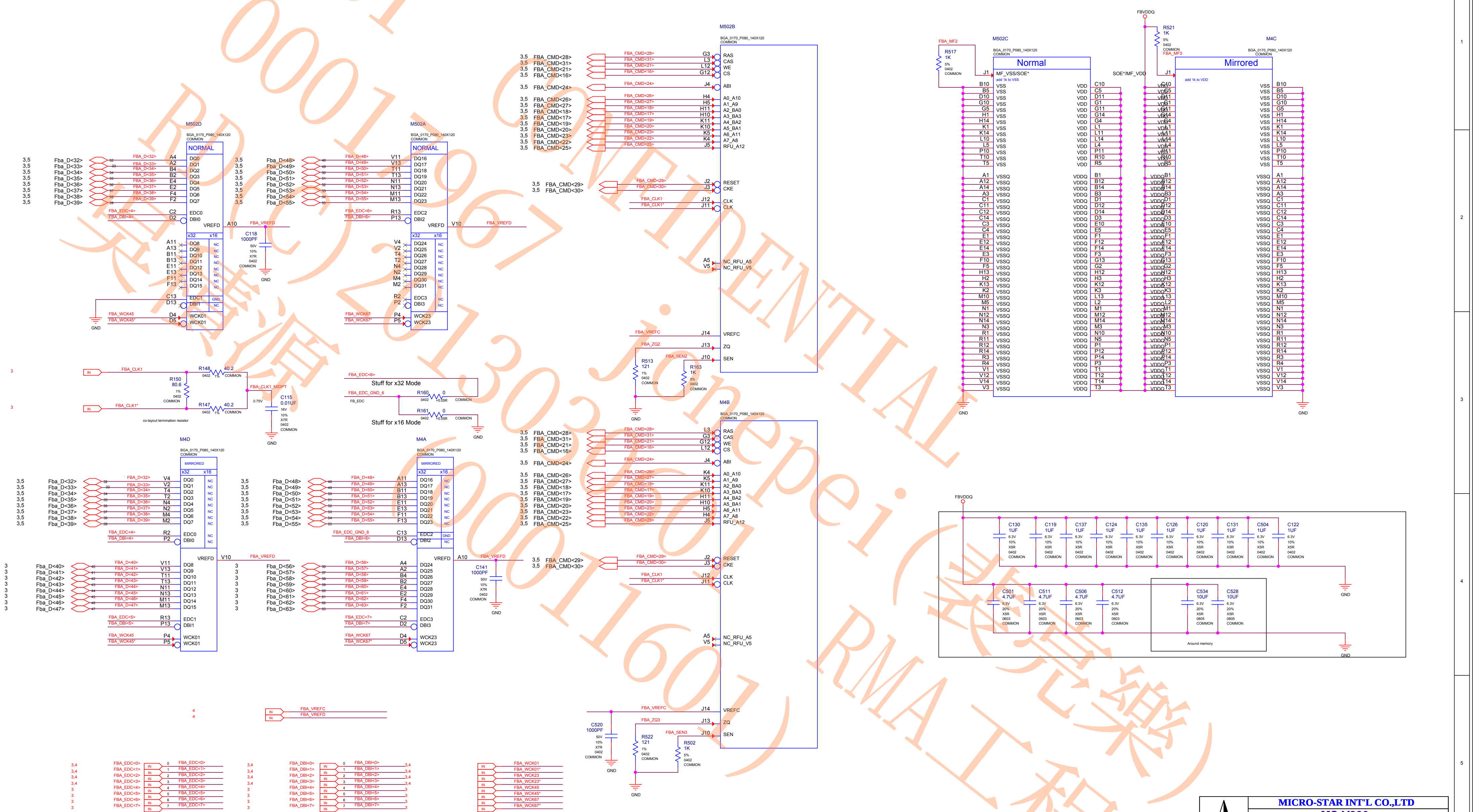

M502D
BGA_0170_P080_140X120
COMMON
NORMAL
Fba_D<32>
Fba_D<33>
Fba_D<34>
Fba_D<35>
Fba_D<36>
Fba_D<37>
Fba_D<38>
Fba_D<39>
DQ0
DQ1
DQ2
DQ3
DQ4
DQ5
DQ6
DQ7
EDC0
DBI0
VREFD
FBA_EDC<4>
FBA_DBI<4>
FBA_VREFD
FBA_WCK45
FBA_WCK45*
WCK01
C118
1000PF
GND
M502A
Fba_D<48>
Fba_D<49>
Fba_D<50>
Fba_D<51>
Fba_D<52>
Fba_D<53>
Fba_D<54>
Fba_D<55>
DQ16
DQ17
DQ18
DQ19
DQ20
DQ21
DQ22
DQ23
EDC2
DBI2
FBA_EDC<6>
FBA_DBI<6>
FBA_WCK67
FBA_WCK67*
WCK23
FBA_CLK1
FBA_CLK1*
R148 40.2
R147 40.2
R150 80.6
FBA_CLK1_MIDPT
C115 0.01UF
co-layout termination resistor
Stuff for x32 Mode
Stuff for x16 Mode
FBA_EDC_GND_6
FB_EDC
R160 0
R161 0
M4D
MIRRORED
M4A
Fba_D<40>
Fba_D<41>
Fba_D<42>
Fba_D<43>
Fba_D<44>
Fba_D<45>
Fba_D<46>
Fba_D<47>
Fba_D<56>
Fba_D<57>
Fba_D<58>
Fba_D<59>
Fba_D<60>
Fba_D<61>
Fba_D<62>
Fba_D<63>
FBA_EDC<5>
FBA_DBI<5>
FBA_EDC<7>
FBA_DBI<7>
C141 1000PF
FBA_VREFC
M502B
FBA_CMD<28>
FBA_CMD<31>
FBA_CMD<21>
FBA_CMD<16>
FBA_CMD<24>
FBA_CMD<26>
FBA_CMD<27>
FBA_CMD<18>
FBA_CMD<17>
FBA_CMD<19>
FBA_CMD<20>
FBA_CMD<23>
FBA_CMD<22>
FBA_CMD<25>
FBA_CMD<29>
FBA_CMD<30>
RAS
CAS
WE
CS
ABI
A0_A10
A1_A9
A2_BA0
A3_BA3
A4_BA2
A5_BA1
A6_A11
A7_A8
RFU_A12
RESET
CKE
CLK
NC_RFU_A5
NC_RFU_V5
VREFC
ZQ
SEN
FBA_ZQ2
FBA_SEN2
R513 121
R163 1K
M4B
FBA_ZQ3
FBA_SEN3
R522 121
R502 1K
C520 1000PF
M502C
Normal
FBA_MF2
R517 1K
MF_VSS/SOE*
add 1k to VSS
VSS
VDD
VSSQ
VDDQ
SOE*/MF_VDD
FBVDDQ
R521 1K
FBA_MF3
M4C
Mirrored
add 1k to VDD
C130 1UF
C119 1UF
C137 1UF
C124 1UF
C135 1UF
C126 1UF
C120 1UF
C131 1UF
C504 1UF
C122 1UF
C501 4.7UF
C511 4.7UF
C506 4.7UF
C512 4.7UF
C534 10UF
C528 10UF
Around memory
FBA_EDC<0>
FBA_EDC<1>
FBA_EDC<2>
FBA_EDC<3>
FBA_DBI<0>
FBA_DBI<1>
FBA_DBI<2>
FBA_DBI<3>
FBA_WCK01
FBA_WCK01*
FBA_WCK23
FBA_WCK23*
IN

MICRO-STAR INT'L CO.,LTD

MS-V280

Size Custom
Document Description 01_Table of Contents
Rev 1.0
Date: Tuesday, August 14, 2012
Sheet 5 of 25

MSI 0001967 CONFIDENTIAL jonepei(裴亮樂) RMA工程課

Page 6:FBB Partition [31..0]

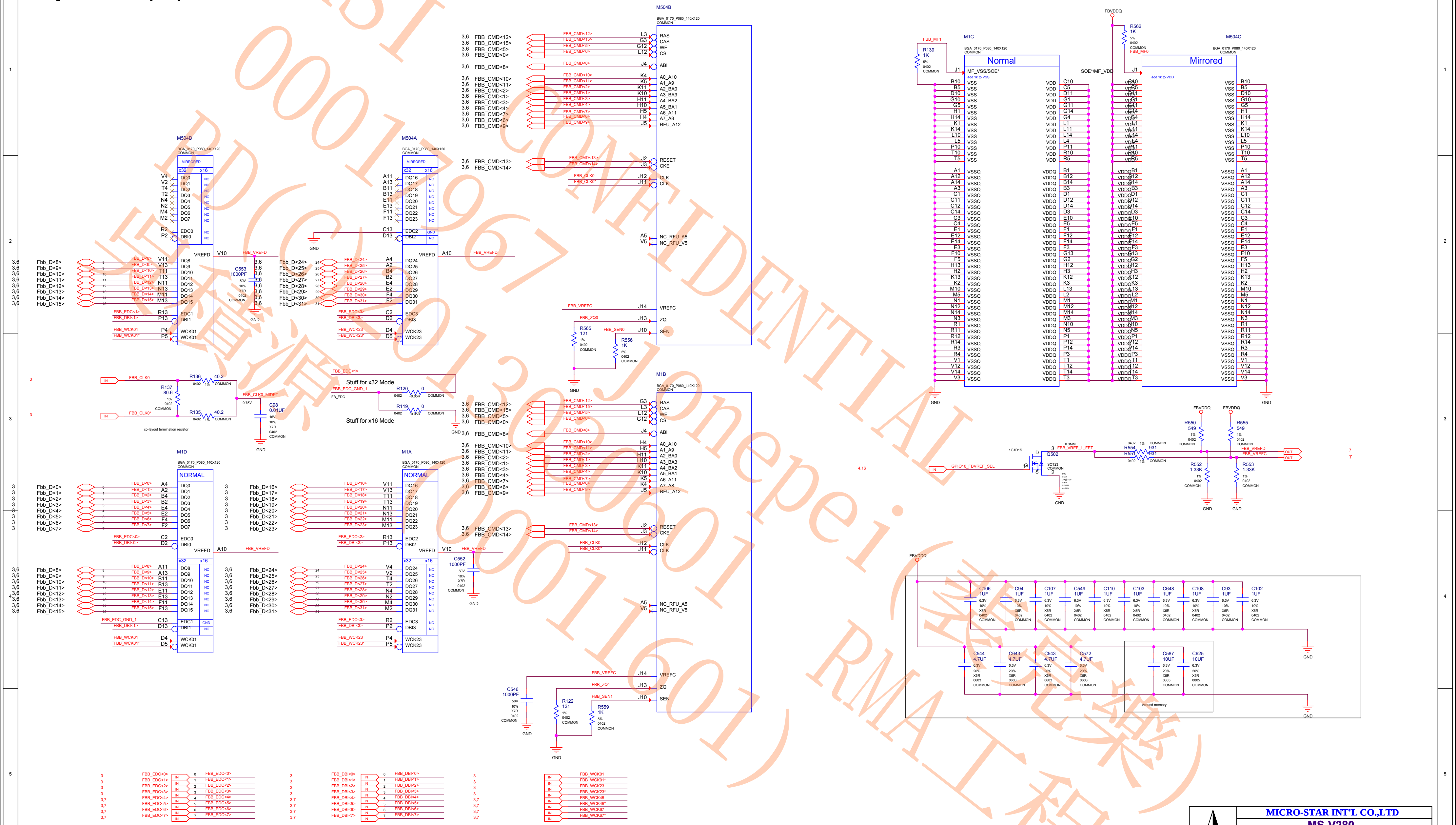
M504B
BGA_0170_P080_140X120
COMMON
3,6 FBB_CMD<12> FBB_CMD<12> L3 RAS
3,6 FBB_CMD<15> FBB_CMD<15> G3 CAS
3,6 FBB_CMD<5> FBB_CMD<5> G12 WE
3,6 FBB_CMD<0> FBB_CMD<0> L12 CS
3,6 FBB_CMD<8> FBB_CMD<8> J4 ABI
3,6 FBB_CMD<10> FBB_CMD<10> K4 A0_A10
3,6 FBB_CMD<11> FBB_CMD<11> K5 A1_A9
3,6 FBB_CMD<2> FBB_CMD<2> K11 A2_BA0
3,6 FBB_CMD<1> FBB_CMD<1> K10 A3_BA3
3,6 FBB_CMD<3> FBB_CMD<3> H11 A4_BA2
3,6 FBB_CMD<4> FBB_CMD<4> H10 A5_BA1
3,6 FBB_CMD<7> FBB_CMD<7> H5 A6_A11
3,6 FBB_CMD<6> FBB_CMD<6> H4 A7_A8
3,6 FBB_CMD<9> FBB_CMD<9> J5 RFU_A12
3,6 FBB_CMD<13> FBB_CMD<13> J2 RESET
3,6 FBB_CMD<14> FBB_CMD<14> J3 CKE
FBB_CLK0 J12 CLK
FBB_CLK0* J11 CLK
A5 NC_RFU_A5
V5 NC_RFU_V5
FBB_VREFC J14 VREFC
FBB_ZQ0 J13 ZQ
FBB_SEN0 J10 SEN
R565 121 1% 0402 COMMON
R556 1K 5% 0402 COMMON
GND
M504D
BGA_0170_P080_140X120
COMMON
MIRRORED
x32 x16
V4 DQ0 NC
V2 DQ1 NC
T4 DQ2 NC
T2 DQ3 NC
N4 DQ4 NC
N2 DQ5 NC
M4 DQ6 NC
M2 DQ7 NC
R2 EDC0 NC
P2 DBI0 NC
VREFD V10 FBB_VREFD
3,6 Fbb_D<8> FBB_D<8> V11 DQ8
3,6 Fbb_D<9> FBB_D<9> V13 DQ9
3,6 Fbb_D<10> FBB_D<10> T11 DQ10
3,6 Fbb_D<11> FBB_D<11> T13 DQ11
3,6 Fbb_D<12> FBB_D<12> N11 DQ12
3,6 Fbb_D<13> FBB_D<13> N13 DQ13
3,6 Fbb_D<14> FBB_D<14> M11 DQ14
3,6 Fbb_D<15> FBB_D<15> M13 DQ15
FBB_EDC<1> R13 EDC1
FBB_DBI<1> P13 DBI1
FBB_WCK01 P4 WCK01
FBB_WCK01* P5 WCK01
C553 1000PF 50V 10% X7R 0402 COMMON
GND
M504A
BGA_0170_P080_140X120
COMMON
MIRRORED
x32 x16
A11 DQ16 NC
A13 DQ17 NC
B11 DQ18 NC
B13 DQ19 NC
E11 DQ20 NC
E13 DQ21 NC
F11 DQ22 NC
F13 DQ23 NC
C13 EDC2 GND
D13 DBI2 NC
GND
VREFD A10 FBB_VREFD
3,6 Fbb_D<24> FBB_D<24> A4 DQ24
3,6 Fbb_D<25> FBB_D<25> A2 DQ25
3,6 Fbb_D<26> FBB_D<26> B4 DQ26
3,6 Fbb_D<27> FBB_D<27> B2 DQ27
3,6 Fbb_D<28> FBB_D<28> E4 DQ28
3,6 Fbb_D<29> FBB_D<29> E2 DQ29
3,6 Fbb_D<30> FBB_D<30> F4 DQ30
3,6 Fbb_D<31> FBB_D<31> F2 DQ31
FBB_EDC<3> C2 EDC3
FBB_DBI<3> D2 DBI3
FBB_WCK23 D4 WCK23
FBB_WCK23* D5 WCK23
3 IN FBB_CLK0
R136 40.2 0402 1% COMMON
R137 80.6 1% 0402 COMMON
3 IN FBB_CLK0*
R135 40.2 0402 1% COMMON
co-layout termination resistor
FBB_CLK0_MIDPT
0.75V
C98 0.01UF 16V 10% X7R 0402 COMMON
GND
FBB_EDC<1>
Stuff for x32 Mode
FBB_EDC_GND_1
FB_EDC
R120 0 0402 +0.05R COMMON
R119 0 0402 +0.05R COMMON
Stuff for x16 Mode
GND
M1D
BGA_0170_P080_140X120
COMMON
NORMAL
3 Fbb_D<0> FBB_D<0> A4 DQ0
3 Fbb_D<1> FBB_D<1> A2 DQ1
3 Fbb_D<2> FBB_D<2> B4 DQ2
3 Fbb_D<3> FBB_D<3> B2 DQ3
3 Fbb_D<4> FBB_D<4> E4 DQ4
3 Fbb_D<5> FBB_D<5> E2 DQ5
3 Fbb_D<6> FBB_D<6> F4 DQ6
3 Fbb_D<7> FBB_D<7> F2 DQ7
FBB_EDC<0> C2 EDC0
FBB_DBI<0> D2 DBI0
VREFD A10 FBB_VREFD
x32 x16
3,6 Fbb_D<8> FBB_D<8> A11 DQ8 NC
3,6 Fbb_D<9> FBB_D<9> A13 DQ9 NC
3,6 Fbb_D<10> FBB_D<10> B11 DQ10 NC
3,6 Fbb_D<11> FBB_D<11> B13 DQ11 NC
3,6 Fbb_D<12> FBB_D<12> E11 DQ12 NC
3,6 Fbb_D<13> FBB_D<13> E13 DQ13 NC
3,6 Fbb_D<14> FBB_D<14> F11 DQ14 NC
3,6 Fbb_D<15> FBB_D<15> F13 DQ15 NC
FBB_EDC_GND_1 C13 EDC1 GND
FBB_DBI<1> D13 DBI1 NC
FBB_WCK01 D4 WCK01
FBB_WCK01* D5 WCK01
M1A
BGA_0170_P080_140X120
COMMON
NORMAL
3 Fbb_D<16> FBB_D<16> V11 DQ16
3 Fbb_D<17> FBB_D<17> V13 DQ17
3 Fbb_D<18> FBB_D<18> T11 DQ18
3 Fbb_D<19> FBB_D<19> T13 DQ19
3 Fbb_D<20> FBB_D<20> N11 DQ20
3 Fbb_D<21> FBB_D<21> N13 DQ21
3 Fbb_D<22> FBB_D<22> M11 DQ22
3 Fbb_D<23> FBB_D<23> M13 DQ23
FBB_EDC<2> R13 EDC2
FBB_DBI<2> P13 DBI2
VREFD V10 FBB_VREFD
C552 1000PF 50V 10% X7R 0402 COMMON
GND
x32 x16
3,6 Fbb_D<24> FBB_D<24> V4 DQ24 NC
3,6 Fbb_D<25> FBB_D<25> V2 DQ25 NC
3,6 Fbb_D<26> FBB_D<26> T4 DQ26 NC
3,6 Fbb_D<27> FBB_D<27> T2 DQ27 NC
3,6 Fbb_D<28> FBB_D<28> N4 DQ28 NC
3,6 Fbb_D<29> FBB_D<29> N2 DQ29 NC
3,6 Fbb_D<30> FBB_D<30> M4 DQ30 NC
3,6 Fbb_D<31> FBB_D<31> M2 DQ31 NC
FBB_EDC<3> R2 EDC3 NC
FBB_DBI<3> P2 DBI3 NC
FBB_WCK23 P4 WCK23
FBB_WCK23* P5 WCK23
M1B
BGA_0170_P080_140X120
COMMON
3,6 FBB_CMD<12> FBB_CMD<12> G3 RAS
3,6 FBB_CMD<15> FBB_CMD<15> L3 CAS
3,6 FBB_CMD<5> FBB_CMD<5> L12 WE
3,6 FBB_CMD<0> FBB_CMD<0> G12 CS
3,6 FBB_CMD<8> FBB_CMD<8> J4 ABI
3,6 FBB_CMD<10> FBB_CMD<10> H4 A0_A10
3,6 FBB_CMD<11> FBB_CMD<11> H5 A1_A9
3,6 FBB_CMD<2> FBB_CMD<2> H11 A2_BA0
3,6 FBB_CMD<1> FBB_CMD<1> H10 A3_BA3
3,6 FBB_CMD<3> FBB_CMD<3> K11 A4_BA2
3,6 FBB_CMD<4> FBB_CMD<4> K10 A5_BA1
3,6 FBB_CMD<7> FBB_CMD<7> K5 A6_A11
3,6 FBB_CMD<6> FBB_CMD<6> K4 A7_A8
3,6 FBB_CMD<9> FBB_CMD<9> J5 RFU_A12
3,6 FBB_CMD<13> FBB_CMD<13> J2 RESET
3,6 FBB_CMD<14> FBB_CMD<14> J3 CKE
FBB_CLK0 J12 CLK
FBB_CLK0* J11 CLK
A5 NC_RFU_A5
V5 NC_RFU_V5
FBB_VREFC J14 VREFC
FBB_ZQ1 J13 ZQ
FBB_SEN1 J10 SEN
C546 1000PF 50V 10% X7R 0402 COMMON
R122 121 1% 0402 COMMON
R559 1K 5% 0402 COMMON
GND
FBB_MF1
R139 1K 5% 0402 COMMON
M1C
BGA_0170_P080_140X120
COMMON
Normal
J1 MF_VSS/SOE*
add 1k to VSS
VSS: B10 B5 D10 G10 G5 H1 H14 K1 K14 L10 L5 P10 T10 T5
VSSQ: A1 A12 A14 A3 C1 C11 C12 C14 C3 C4 E1 E12 E14 E3 F10 F5 H13 H2 K13 K2 M10 M5 N1 N12 N14 N3 R1 R11 R12 R14 R3 R4 V1 V12 V14 V3
VDD: C10 C5 D11 G1 G11 G14 G4 L1 L11 L14 L4 P11 R10 R5
VDDQ: B1 B12 B14 B3 D1 D12 D14 D3 E10 E5 F1 F12 F14 F3 G13 G2 H12 H3 K12 K3 L13 L2 M1 M12 M14 M3 N10 N5 P1 P12 P14 P3 T1 T12 T14 T3
GND
FBVDDQ
R562 1K 5% 0402 COMMON
FBB_MF0
SOE*/MF_VDD
M504C
BGA_0170_P080_140X120
COMMON
Mirrored
J1
add 1k to VDD
VDD: C10 C5 D11 G1 G11 G14 G4 L1 L11 L14 L4 P11 R10 R5
VDDQ: B1 B12 B14 B3 D1 D12 D14 D3 E10 E5 F1 F12 F14 F3 G13 G2 H12 H3 K12 K3 L13 L2 M1 M12 M14 M3 N10 N5 P1 P12 P14 P3 T1 T12 T14 T3
VSS: B10 B5 D10 G10 G5 H1 H14 K1 K14 L10 L5 P10 T10 T5
VSSQ: A1 A12 A14 A3 C1 C11 C12 C14 C3 C4 E1 E12 E14 E3 F10 F5 H13 H2 K13 K2 M10 M5 N1 N12 N14 N3 R1 R11 R12 R14 R3 R4 V1 V12 V14 V3
GND
FBVDDQ FBVDDQ
R550 549 1% 0402 COMMON
R555 549 1% 0402 COMMON
1G1D1S
Q502 SOT23 COMMON
D G S
3 FBB_VREF_L_FET 0.3MM
2
60V 0.3A 2R@10V 0.8A 0.35W +/-20V
4,16 IN GPIO10_FBVREF_SEL
R554 931 0402 1% COMMON
R551 931 0402 1% COMMON
FBB_VREFD OUT 7
FBB_VREFC OUT 7
R552 1.33K 1% 0402 COMMON
R553 1.33K 1% 0402 COMMON
GND GND GND
FBVDDQ
C106 1UF 6.3V 10% X5R 0402 COMMON
C94 1UF 6.3V 10% X5R 0402 COMMON
C107 1UF 6.3V 10% X5R 0402 COMMON
C549 1UF 6.3V 10% X5R 0402 COMMON
C110 1UF 6.3V 10% X5R 0402 COMMON
C103 1UF 6.3V 10% X5R 0402 COMMON
C648 1UF 6.3V 10% X5R 0402 COMMON
C108 1UF 6.3V 10% X5R 0402 COMMON
C93 1UF 6.3V 10% X5R 0402 COMMON
C102 1UF 6.3V 10% X5R 0402 COMMON
C544 4.7UF 6.3V 20% X5R 0603 COMMON
C643 4.7UF 6.3V 20% X5R 0603 COMMON
C543 4.7UF 6.3V 20% X5R 0603 COMMON
C572 4.7UF 6.3V 20% X5R 0603 COMMON
C587 10UF 6.3V 20% X5R 0805 COMMON
C625 10UF 6.3V 20% X5R 0805 COMMON
Around memory
GND GND
3 FBB_EDC<0> IN 0 FBB_EDC<0>
3 FBB_EDC<1> IN 1 FBB_EDC<1>
3 FBB_EDC<2> IN 2 FBB_EDC<2>
3 FBB_EDC<3> IN 3 FBB_EDC<3>
3,7 FBB_EDC<4> IN 4 FBB_EDC<4>
3,7 FBB_EDC<5> IN 5 FBB_EDC<5>
3,7 FBB_EDC<6> IN 6 FBB_EDC<6>
3,7 FBB_EDC<7> IN 7 FBB_EDC<7>
3 FBB_DBI<0> IN 0 FBB_DBI<0>
3 FBB_DBI<1> IN 1 FBB_DBI<1>
3 FBB_DBI<2> IN 2 FBB_DBI<2>
3 FBB_DBI<3> IN 3 FBB_DBI<3>
3,7 FBB_DBI<4> IN 4 FBB_DBI<4>
3,7 FBB_DBI<5> IN 5 FBB_DBI<5>
3,7 FBB_DBI<6> IN 6 FBB_DBI<6>
3,7 FBB_DBI<7> IN 7 FBB_DBI<7>
3 IN FBB_WCK01
3 IN FBB_WCK01*
3 IN FBB_WCK23
3 IN FBB_WCK23*
3,7 IN FBB_WCK45
3,7 IN FBB_WCK45*
3,7 IN FBB_WCK67
3,7 IN FBB_WCK67*
A B C D E F G H
1 2 3 4 5

MICRO-STAR INT'L CO.,LTD

MS-V280

Size	Document Description	Rev
Custom	01_Table of Contents	1.0

Date: Tuesday, August 14, 2012 Sheet 6 of 25

Page 7:FBB Partition [63..32]

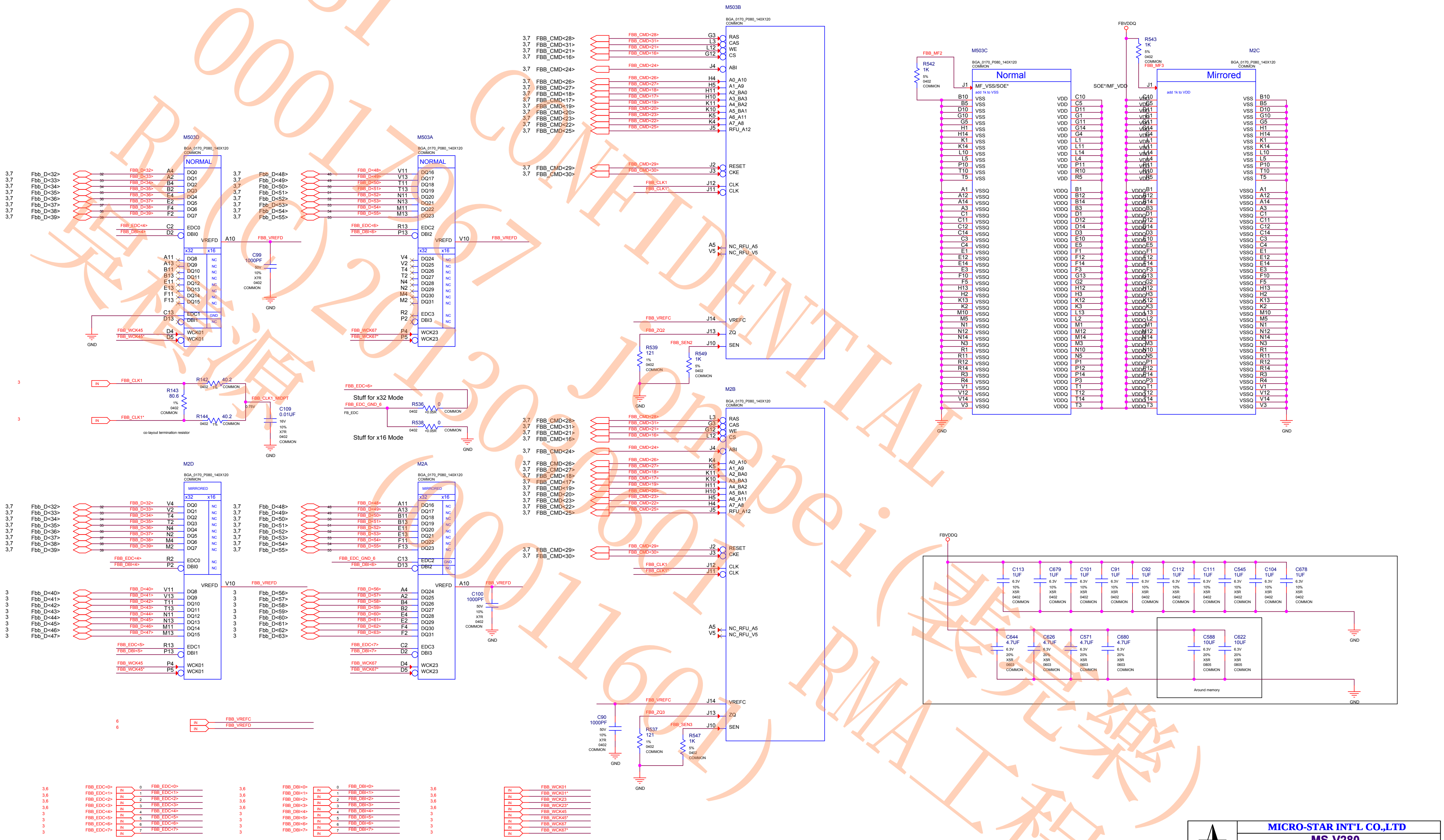
M503D
BGA_0170_P080_140X120 COMMON
NORMAL
3,7 Fbb_D<32> FBB_D<32> A4 DQ0
3,7 Fbb_D<33> FBB_D<33> A2 DQ1
3,7 Fbb_D<34> FBB_D<34> B4 DQ2
3,7 Fbb_D<35> FBB_D<35> B2 DQ3
3,7 Fbb_D<36> FBB_D<36> E4 DQ4
3,7 Fbb_D<37> FBB_D<37> E2 DQ5
3,7 Fbb_D<38> FBB_D<38> F4 DQ6
3,7 Fbb_D<39> FBB_D<39> F2 DQ7
FBB_EDC<4> C2 EDC0
FBB_DBI<4> D2 DBI0
VREFD A10 FBB_VREFD
x32 x16
A11 DQ8 NC
A13 DQ9 NC
B11 DQ10 NC
B13 DQ11 NC
E11 DQ12 NC
E13 DQ13 NC
F11 DQ14 NC
F13 DQ15 NC
C13 EDC1 GND
D13 DBI1 NC
FBB_WCK45 D4 WCK01
FBB_WCK45* D5 WCK01
GND
C99 1000PF 50V 10% X7R 0402 COMMON
GND
M503A
BGA_0170_P080_140X120 COMMON
NORMAL
3,7 Fbb_D<48> FBB_D<48> V11 DQ16
3,7 Fbb_D<49> FBB_D<49> V13 DQ17
3,7 Fbb_D<50> FBB_D<50> T11 DQ18
3,7 Fbb_D<51> FBB_D<51> T13 DQ19
3,7 Fbb_D<52> FBB_D<52> N11 DQ20
3,7 Fbb_D<53> FBB_D<53> N13 DQ21
3,7 Fbb_D<54> FBB_D<54> M11 DQ22
3,7 Fbb_D<55> FBB_D<55> M13 DQ23
FBB_EDC<6> R13 EDC2
FBB_DBI<6> P13 DBI2
VREFD V10 FBB_VREFD
x32 x16
V4 DQ24 NC
V2 DQ25 NC
T4 DQ26 NC
T2 DQ27 NC
N4 DQ28 NC
N2 DQ29 NC
M4 DQ30 NC
M2 DQ31 NC
R2 EDC3 NC
P2 DBI3 NC
FBB_WCK67 P4 WCK23
FBB_WCK67* P5 WCK23
3 IN FBB_CLK1
3 IN FBB_CLK1*
R142 40.2 0402 1% COMMON
R143 80.6 1% 0402 COMMON
R144 40.2 0402 1% COMMON
FBB_CLK1_MIDPT
0.75V
C109 0.01UF 16V 10% X7R 0402 COMMON
GND
co-layout termination resistor
FBB_EDC<6>
Stuff for x32 Mode
FBB_EDC_GND_6
FB_EDC
R536 0 0402 +0.05R COMMON
R538 0 0402 +0.05R COMMON
Stuff for x16 Mode
GND
M503B
BGA_0170_P080_140X120 COMMON
3,7 FBB_CMD<28> G3 RAS
3,7 FBB_CMD<31> L3 CAS
3,7 FBB_CMD<21> L12 WE
3,7 FBB_CMD<16> G12 CS
3,7 FBB_CMD<24> J4 ABI
3,7 FBB_CMD<26> H4 A0_A10
3,7 FBB_CMD<27> H5 A1_A9
3,7 FBB_CMD<18> H11 A2_BA0
3,7 FBB_CMD<17> H10 A3_BA3
3,7 FBB_CMD<19> K11 A4_BA2
3,7 FBB_CMD<20> K10 A5_BA1
3,7 FBB_CMD<23> K5 A6_A11
3,7 FBB_CMD<22> K4 A7_A8
3,7 FBB_CMD<25> J5 RFU_A12
3,7 FBB_CMD<29> J2 RESET
3,7 FBB_CMD<30> J3 CKE
FBB_CLK1 J12 CLK
FBB_CLK1* J11 CLK
A5 NC_RFU_A5
V5 NC_RFU_V5
FBB_VREFC J14 VREFC
FBB_ZQ2 J13 ZQ
FBB_SEN2 J10 SEN
R539 121 1% 0402 COMMON
R549 1K 5% 0402 COMMON
GND
M503C
BGA_0170_P080_140X120 COMMON
Normal
FBB_MF2
R542 1K 5% 0402 COMMON
J1 MF_VSS/SOE*
add 1k to VSS
VSS: B10 B5 D10 G10 G5 H1 H14 K1 K14 L10 L5 P10 T10 T5
VSSQ: A1 A12 A14 A3 C1 C11 C12 C14 C3 C4 E1 E12 E14 E3 F10 F5 H13 H2 K13 K2 M10 M5 N1 N12 N14 N3 R1 R11 R12 R14 R3 R4 V1 V12 V14 V3
VDD: C10 C5 D11 G1 G11 G14 G4 L1 L11 L14 L4 P11 R10 R5
VDDQ: B1 B12 B14 B3 D1 D12 D14 D3 E10 E5 F1 F12 F14 F3 G13 G2 H12 H3 K12 K3 L13 L2 M1 M12 M14 M3 N10 N5 P1 P12 P14 P3 T1 T12 T14 T3
GND
SOE*/MF_VDD
FBVDDQ
R543 1K 5% 0402 COMMON
FBB_MF3
M2C
BGA_0170_P080_140X120 COMMON
Mirrored
J1
add 1k to VDD
VDD: C10 C5 D11 G1 G11 G14 G4 L1 L11 L14 L4 P11 R10 R5
VDDQ: B1 B12 B14 B3 D1 D12 D14 D3 E10 E5 F1 F12 F14 F3 G13 G2 H12 H3 K12 K3 L13 L2 M1 M12 M14 M3 N10 N5 P1 P12 P14 P3 T1 T12 T14 T3
VSS: B10 B5 D10 G10 G5 H1 H14 K1 K14 L10 L5 P10 T10 T5
VSSQ: A1 A12 A14 A3 C1 C11 C12 C14 C3 C4 E1 E12 E14 E3 F10 F5 H13 H2 K13 K2 M10 M5 N1 N12 N14 N3 R1 R11 R12 R14 R3 R4 V1 V12 V14 V3
GND
M2B
BGA_0170_P080_140X120 COMMON
3,7 FBB_CMD<28> L3 RAS
3,7 FBB_CMD<31> G3 CAS
3,7 FBB_CMD<21> G12 WE
3,7 FBB_CMD<16> L12 CS
3,7 FBB_CMD<24> J4 ABI
3,7 FBB_CMD<26> K4 A0_A10
3,7 FBB_CMD<27> K5 A1_A9
3,7 FBB_CMD<18> K11 A2_BA0
3,7 FBB_CMD<17> K10 A3_BA3
3,7 FBB_CMD<19> H11 A4_BA2
3,7 FBB_CMD<20> H10 A5_BA1
3,7 FBB_CMD<23> H5 A6_A11
3,7 FBB_CMD<22> H4 A7_A8
3,7 FBB_CMD<25> J5 RFU_A12
3,7 FBB_CMD<29> J2 RESET
3,7 FBB_CMD<30> J3 CKE
FBB_CLK1 J12 CLK
FBB_CLK1* J11 CLK
A5 NC_RFU_A5
V5 NC_RFU_V5
FBB_VREFC J14 VREFC
FBB_ZQ3 J13 ZQ
FBB_SEN3 J10 SEN
C90 1000PF 50V 10% X7R 0402 COMMON
R537 121 1% 0402 COMMON
R547 1K 5% 0402 COMMON
GND
M2D
BGA_0170_P080_140X120 COMMON
MIRRORED
x32 x16
3,7 Fbb_D<32> FBB_D<32> V4 DQ0 NC
3,7 Fbb_D<33> FBB_D<33> V2 DQ1 NC
3,7 Fbb_D<34> FBB_D<34> T4 DQ2 NC
3,7 Fbb_D<35> FBB_D<35> T2 DQ3 NC
3,7 Fbb_D<36> FBB_D<36> N4 DQ4 NC
3,7 Fbb_D<37> FBB_D<37> N2 DQ5 NC
3,7 Fbb_D<38> FBB_D<38> M4 DQ6 NC
3,7 Fbb_D<39> FBB_D<39> M2 DQ7 NC
FBB_EDC<4> R2 EDC0 NC
FBB_DBI<4> P2 DBI0 NC
VREFD V10 FBB_VREFD
3 Fbb_D<40> FBB_D<40> V11 DQ8
3 Fbb_D<41> FBB_D<41> V13 DQ9
3 Fbb_D<42> FBB_D<42> T11 DQ10
3 Fbb_D<43> FBB_D<43> T13 DQ11
3 Fbb_D<44> FBB_D<44> N11 DQ12
3 Fbb_D<45> FBB_D<45> N13 DQ13
3 Fbb_D<46> FBB_D<46> M11 DQ14
3 Fbb_D<47> FBB_D<47> M13 DQ15
FBB_EDC<5> R13 EDC1
FBB_DBI<5> P13 DBI1
FBB_WCK45 P4 WCK01
FBB_WCK45* P5 WCK01
M2A
BGA_0170_P080_140X120 COMMON
MIRRORED
x32 x16
3,7 Fbb_D<48> FBB_D<48> A11 DQ16 NC
3,7 Fbb_D<49> FBB_D<49> A13 DQ17 NC
3,7 Fbb_D<50> FBB_D<50> B11 DQ18 NC
3,7 Fbb_D<51> FBB_D<51> B13 DQ19 NC
3,7 Fbb_D<52> FBB_D<52> E11 DQ20 NC
3,7 Fbb_D<53> FBB_D<53> E13 DQ21 NC
3,7 Fbb_D<54> FBB_D<54> F11 DQ22 NC
3,7 Fbb_D<55> FBB_D<55> F13 DQ23 NC
FBB_EDC_GND_6 C13 EDC2 GND
FBB_DBI<6> D13 DBI2 NC
VREFD A10 FBB_VREFD
3 Fbb_D<56> FBB_D<56> A4 DQ24
3 Fbb_D<57> FBB_D<57> A2 DQ25
3 Fbb_D<58> FBB_D<58> B4 DQ26
3 Fbb_D<59> FBB_D<59> B2 DQ27
3 Fbb_D<60> FBB_D<60> E4 DQ28
3 Fbb_D<61> FBB_D<61> E2 DQ29
3 Fbb_D<62> FBB_D<62> F4 DQ30
3 Fbb_D<63> FBB_D<63> F2 DQ31
FBB_EDC<7> C2 EDC3
FBB_DBI<7> D2 DBI3
FBB_WCK67 D4 WCK23
FBB_WCK67* D5 WCK23
C100 1000PF 50V 10% X7R 0402 COMMON
GND
FBVDDQ
C113 1UF 6.3V 10% X5R 0402 COMMON
C679 1UF 6.3V 10% X5R 0402 COMMON
C101 1UF 6.3V 10% X5R 0402 COMMON
C91 1UF 6.3V 10% X5R 0402 COMMON
C92 1UF 6.3V 10% X5R 0402 COMMON
C112 1UF 6.3V 10% X5R 0402 COMMON
C111 1UF 6.3V 10% X5R 0402 COMMON
C545 1UF 6.3V 10% X5R 0402 COMMON
C104 1UF 6.3V 10% X5R 0402 COMMON
C678 1UF 6.3V 10% X5R 0402 COMMON
GND
C644 4.7UF 6.3V 20% X5R 0603 COMMON
C626 4.7UF 6.3V 20% X5R 0603 COMMON
C571 4.7UF 6.3V 20% X5R 0603 COMMON
C680 4.7UF 6.3V 20% X5R 0603 COMMON
C588 10UF 6.3V 20% X5R 0805 COMMON
C622 10UF 6.3V 20% X5R 0805 COMMON
Around memory
GND
6 IN FBB_VREFC
6 IN FBB_VREFD
3,6 FBB_EDC<0> IN 0 FBB_EDC<0>
3,6 FBB_EDC<1> IN 1 FBB_EDC<1>
3,6 FBB_EDC<2> IN 2 FBB_EDC<2>
3,6 FBB_EDC<3> IN 3 FBB_EDC<3>
3 FBB_EDC<4> IN 4 FBB_EDC<4>
3 FBB_EDC<5> IN 5 FBB_EDC<5>
3 FBB_EDC<6> IN 6 FBB_EDC<6>
3 FBB_EDC<7> IN 7 FBB_EDC<7>
3,6 FBB_DBI<0> IN 0 FBB_DBI<0>
3,6 FBB_DBI<1> IN 1 FBB_DBI<1>
3,6 FBB_DBI<2> IN 2 FBB_DBI<2>
3,6 FBB_DBI<3> IN 3 FBB_DBI<3>
3 FBB_DBI<4> IN 4 FBB_DBI<4>
3 FBB_DBI<5> IN 5 FBB_DBI<5>
3 FBB_DBI<6> IN 6 FBB_DBI<6>
3 FBB_DBI<7> IN 7 FBB_DBI<7>
3,6 IN FBB_WCK01
3,6 IN FBB_WCK01*
3,6 IN FBB_WCK23
3,6 IN FBB_WCK23*
3 IN FBB_WCK45
3 IN FBB_WCK45*
3 IN FBB_WCK67
3 IN FBB_WCK67*

MSI

MICRO-STAR INT'L CO.,LTD

MS-V280

Size	Document Description	Rev
Custom	01_Table of Contents	1.0

Date: Tuesday, August 14, 2012 Sheet 7 of 25

FB Decoupling

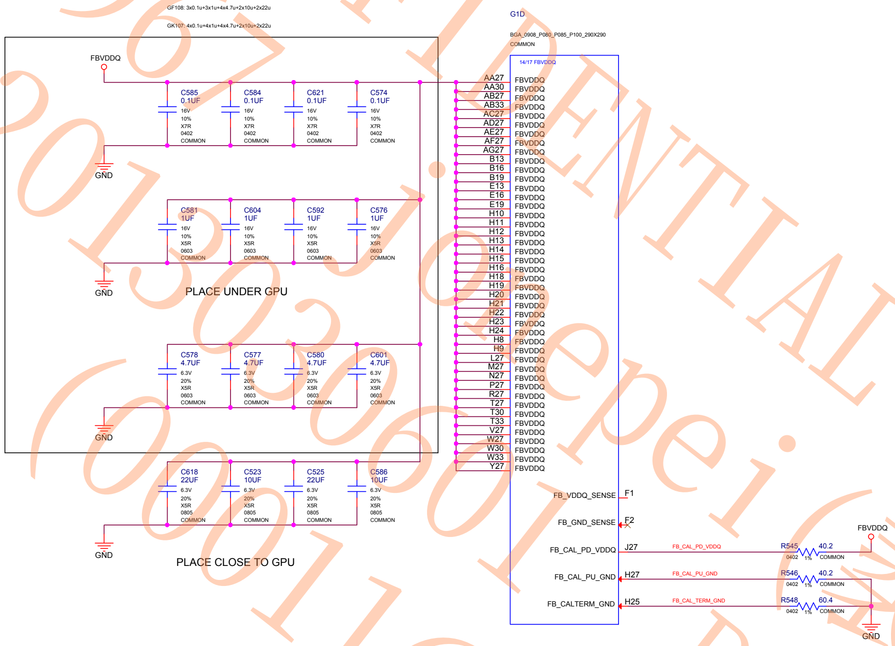
GF108: 3x0.1u+3x1u+4x4.7u+2x10u+2x22u
GK107: 4x0.1u+4x1u+4x4.7u+2x10u+2x22u
FBVDDQ
C585 0.1UF 16V 10% X7R 0402 COMMON
C584 0.1UF 16V 10% X7R 0402 COMMON
C621 0.1UF 16V 10% X7R 0402 COMMON
C574 0.1UF 16V 10% X7R 0402 COMMON
GND
C581 1UF 16V 10% X5R 0603 COMMON
C604 1UF 16V 10% X5R 0603 COMMON
C592 1UF 16V 10% X5R 0603 COMMON
C576 1UF 16V 10% X5R 0603 COMMON
GND
PLACE UNDER GPU
C578 4.7UF 6.3V 20% X5R 0603 COMMON
C577 4.7UF 6.3V 20% X5R 0603 COMMON
C580 4.7UF 6.3V 20% X5R 0603 COMMON
C601 4.7UF 6.3V 20% X5R 0603 COMMON
GND
C618 22UF 6.3V 20% X5R 0805 COMMON
C523 10UF 6.3V 20% X5R 0805 COMMON
C525 22UF 6.3V 20% X5R 0805 COMMON
C586 10UF 6.3V 20% X5R 0805 COMMON
GND
PLACE CLOSE TO GPU
G1D
BGA_0908_P080_P085_P100_290X290
COMMON
14/17 FBVDDQ
AA27 FBVDDQ
AA30 FBVDDQ
AB27 FBVDDQ
AB33 FBVDDQ
AC27 FBVDDQ
AD27 FBVDDQ
AE27 FBVDDQ
AF27 FBVDDQ
AG27 FBVDDQ
B13 FBVDDQ
B16 FBVDDQ
B19 FBVDDQ
E13 FBVDDQ
E16 FBVDDQ
E19 FBVDDQ
H10 FBVDDQ
H11 FBVDDQ
H12 FBVDDQ
H13 FBVDDQ
H14 FBVDDQ
H15 FBVDDQ
H16 FBVDDQ
H18 FBVDDQ
H19 FBVDDQ
H20 FBVDDQ
H21 FBVDDQ
H22 FBVDDQ
H23 FBVDDQ
H24 FBVDDQ
H8 FBVDDQ
H9 FBVDDQ
L27 FBVDDQ
M27 FBVDDQ
N27 FBVDDQ
P27 FBVDDQ
R27 FBVDDQ
T27 FBVDDQ
T30 FBVDDQ
T33 FBVDDQ
V27 FBVDDQ
W27 FBVDDQ
W30 FBVDDQ
W33 FBVDDQ
Y27 FBVDDQ
FB_VDDQ_SENSE F1
FB_GND_SENSE F2
FB_CAL_PD_VDDQ J27
FB_CAL_PU_GND H27
FB_CALTERM_GND H25
FB_CAL_PD_VDDQ
FB_CAL_PU_GND
FB_CAL_TERM_GND
R545 40.2 0402 1% COMMON
R546 40.2 0402 1% COMMON
R548 60.4 0402 1% COMMON
FBVDDQ
GND

MICRO-STAR INT'L CO.,LTD	
MS-V280	
Size Custom	Document Description 01_Table of Contents
Rev 1.0	
Date: Tuesday, August 14, 2012	Sheet 8 of 25

MSI CONFIDENTIAL 00017967 RD(C)吳積源 2013030601 joepei(裴亮樂) (00011601) RMA工程課

DACA VGA

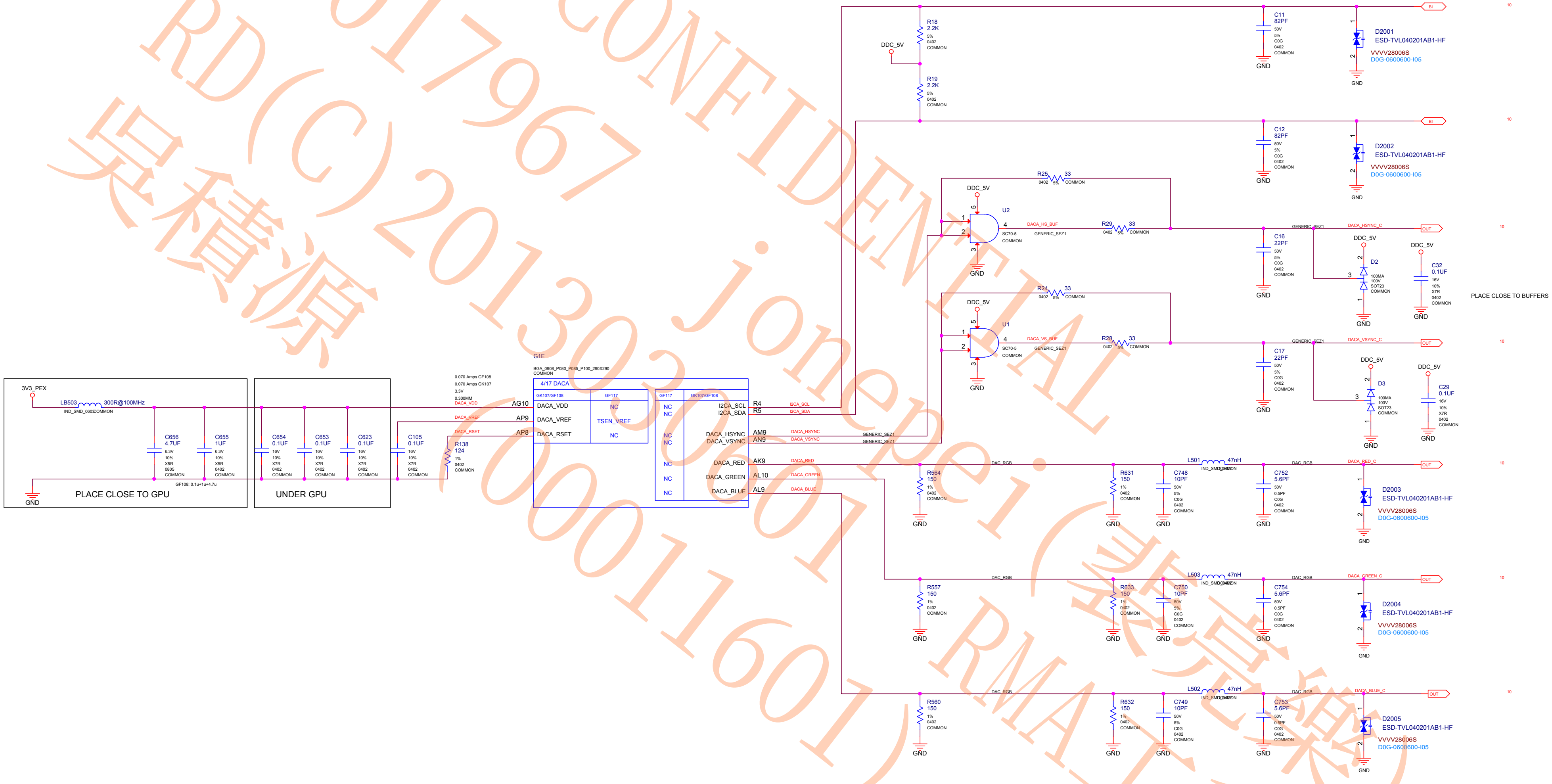

3V3_PEX
LB503 300R@100MHz
IND_SMD_0603 COMMON
C656 4.7UF 6.3V 10% X5R 0805 COMMON
C655 1UF 6.3V 10% X5R 0402 COMMON
GND
PLACE CLOSE TO GPU
GF108: 0.1u+1u+4.7u
C654 0.1UF 16V 10% X7R 0402 COMMON
C653 0.1UF 16V 10% X7R 0402 COMMON
C623 0.1UF 16V 10% X7R 0402 COMMON
C105 0.1UF 16V 10% X7R 0402 COMMON
UNDER GPU
0.070 Amps GF108
0.070 Amps GK107
3.3V
0.300MM
DACA_VDD
DACA_VREF
DACA_RSET
R138 124 1% 0402 COMMON
G1E
BGA_0908_P080_P085_P100_290X290
COMMON
4/17 DACA
GK107/GF108
GF117
AG10 DACA_VDD NC
AP9 DACA_VREF TSEN_VREF
AP8 DACA_RSET NC
NC I2CA_SCL R4
NC I2CA_SDA R5
NC DACA_HSYNC AM9
NC DACA_VSYNC AN9
NC DACA_RED AK9
NC DACA_GREEN AL10
NC DACA_BLUE AL9
I2CA_SCL
I2CA_SDA
DACA_HSYNC
DACA_VSYNC
GENERIC_SEZ1
DACA_RED
DACA_GREEN
DACA_BLUE
DDC_5V
R18 2.2K 5% 0402 COMMON
R19 2.2K 5% 0402 COMMON
C11 82PF 50V 5% C0G 0402 COMMON
C12 82PF 50V 5% C0G 0402 COMMON
D2001 ESD-TVL040201AB1-HF
D2002 ESD-TVL040201AB1-HF
VVVV28006S
D0G-0600600-I05
BI
10
R25 33 0402 5% COMMON
R24 33 0402 5% COMMON
U2
U1
SC70-5 COMMON
GENERIC_SEZ1
DACA_HS_BUF
DACA_VS_BUF
R29 33 0402 5% COMMON
R28 33 0402 5% COMMON
C16 22PF 50V 5% C0G 0402 COMMON
C17 22PF 50V 5% C0G 0402 COMMON
DACA_HSYNC_C
DACA_VSYNC_C
OUT
D2 100MA 100V SOT23 COMMON
D3 100MA 100V SOT23 COMMON
C32 0.1UF 16V 10% X7R 0402 COMMON
C29 0.1UF 16V 10% X7R 0402 COMMON
PLACE CLOSE TO BUFFERS
DAC_RGB
R564 150 1% 0402 COMMON
R557 150 1% 0402 COMMON
R560 150 1% 0402 COMMON
R631 150 1% 0402 COMMON
R633 150 1% 0402 COMMON
R632 150 1% 0402 COMMON
C748 10PF 50V 5% C0G 0402 COMMON
C750 10PF 50V 5% C0G 0402 COMMON
C749 10PF 50V 5% C0G 0402 COMMON
L501 47nH IND_SMD_0402 COMMON
L503 47nH IND_SMD_0402 COMMON
L502 47nH IND_SMD_0402 COMMON
C752 5.6PF 50V 0.5PF C0G 0402 COMMON
C754 5.6PF 50V 0.5PF C0G 0402 COMMON
C753 5.6PF 50V 0.5PF C0G 0402 COMMON
DACA_RED_C
DACA_GREEN_C
DACA_BLUE_C
D2003 ESD-TVL040201AB1-HF
D2004 ESD-TVL040201AB1-HF
D2005 ESD-TVL040201AB1-HF

MSI CONFIDENTIAL
00017967 jonepei(裴宗樂)
RD(C)20130301(00011601)RMA工程課
吳積源

MICRO-STAR INT'L CO.,LTD

MS-V280

Size	Document Description	Rev
Custom	01_Table of Contents	1.0

Date: Tuesday, August 14, 2012 Sheet 9 of 25

IFPAB TMDS

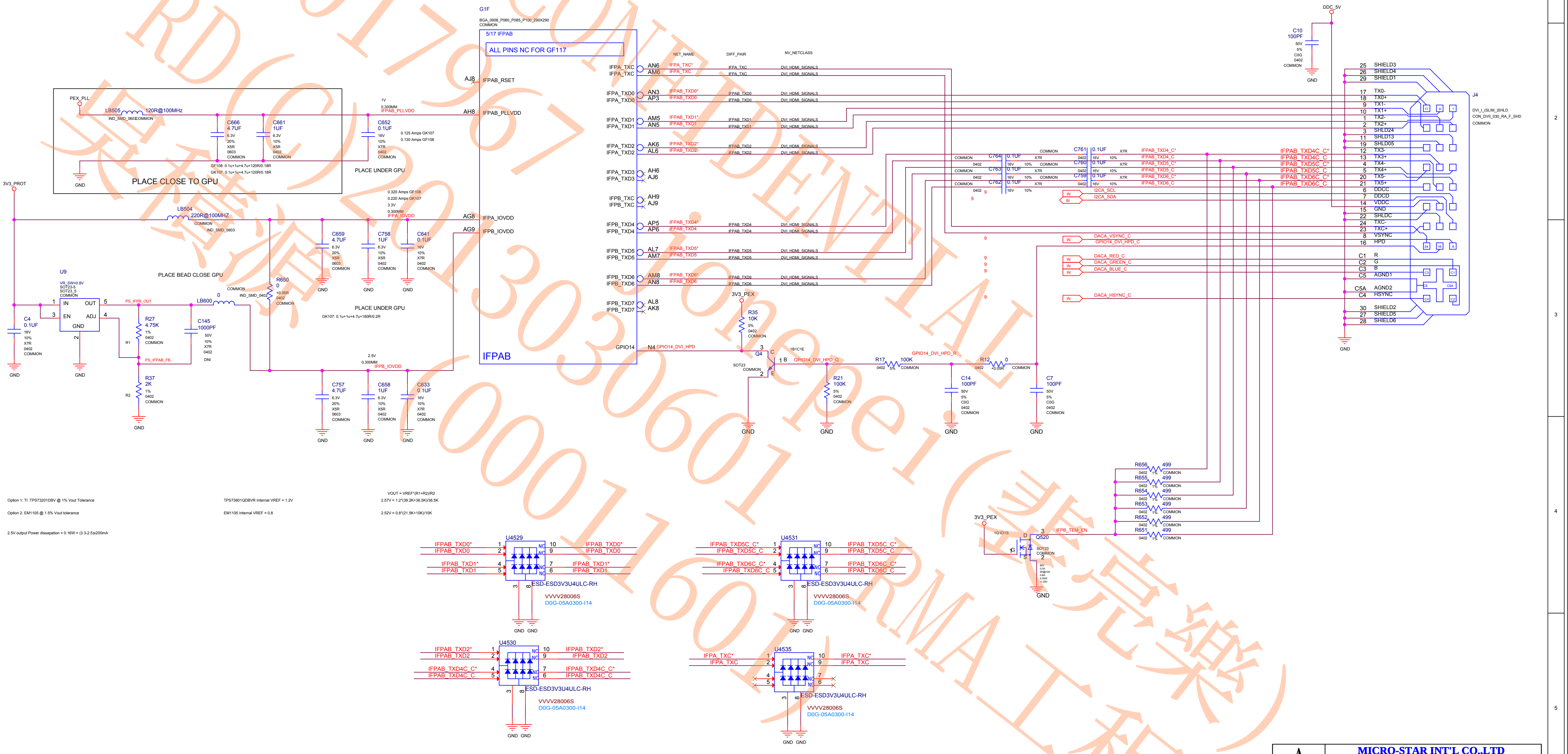

G1F
BGA_0908_P080_P085_P100_290X290
COMMON
5/17 IFPAB
ALL PINS NC FOR GF117
IFPAB
AJ8 IFPAB_RSET
AH8 IFPAB_PLLVDD
AG8 IFPA_IOVDD
AG9 IFPB_IOVDD
IFPA_TXC AN6
IFPA_TXC AM6
IFPA_TXD0 AN3
IFPA_TXD0 AP3
IFPA_TXD1 AM5
IFPA_TXD1 AN5
IFPA_TXD2 AK6
IFPA_TXD2 AL6
IFPA_TXD3 AH6
IFPA_TXD3 AJ6
IFPB_TXC AH9
IFPB_TXC AJ9
IFPB_TXD4 AP5
IFPB_TXD4 AP6
IFPB_TXD5 AL7
IFPB_TXD5 AM7
IFPB_TXD6 AM8
IFPB_TXD6 AN8
IFPB_TXD7 AL8
IFPB_TXD7 AK8
GPIO14 N4
NET_NAME
DIFF_PAIR
NV_NETCLASS
IFPA_TXC*
IFPA_TXC
IFPAB_TXD0*
IFPAB_TXD0
IFPAB_TXD1*
IFPAB_TXD1
IFPAB_TXD2*
IFPAB_TXD2
IFPAB_TXD4*
IFPAB_TXD4
IFPAB_TXD5*
IFPAB_TXD5
IFPAB_TXD6*
IFPAB_TXD6
DVI_HDMI_SIGNALS
PEX_PLL
LB505
120R@100MHz
IND_SMD_0603
COMMON
C666
4.7UF
6.3V
20%
X5R
0603
C661
1UF
6.3V
10%
X5R
0402
C652
0.1UF
16V
10%
X7R
0402
1V
0.300MM
IFPAB_PLLVDD
0.125 Amps GK107
0.130 Amps GF108
GF108: 0.1u+1u+4.7u+120R/0.18R
GK107: 0.1u+1u+4.7u+120R/0.18R
PLACE CLOSE TO GPU
PLACE UNDER GPU
GND
3V3_PROT
LB504
220R@100MHZ
COMMON
IND_SMD_0603
0.320 Amps GF108
0.220 Amps GK107
3.3V
0.300MM
IFPA_IOVDD
C659
4.7UF
C758
1UF
C641
0.1UF
PLACE BEAD CLOSE GPU
U9
VR_SW=0.8V
SOT23-5
SOT23_5
COMMON
IN
OUT
EN
ADJ
GND
1
3
5
4
2
C4
0.1UF
PS_IFPB_OUT
LB600
0
IND_SMD_0402
R650
0
+0.05R
R27
4.75K
1%
R1
C145
1000PF
50V
DNI
PS_IFPAB_FB
R37
2K
R2
GK107: 0.1u+1u+4.7u+180R/0.2R
2.5V
0.300MM
IFPB_IOVDD
C757
4.7UF
C658
1UF
C633
0.1UF
3V3_PEX
R35
10K
5%
GPIO14_DVI_HPD
Q4
SOT23
1B1C1E
C
B
E
GPIO14_DVI_HPD_Q
R17
100K
GPIO14_DVI_HPD_R
R12
0
R21
100K
C14
100PF
C7
100PF
50V
5%
C0G
C764
C763
C762
C761
C760
C759
0.1UF
IFPAB_TXD4_C*
IFPAB_TXD4_C
IFPAB_TXD5_C*
IFPAB_TXD5_C
IFPAB_TXD6_C*
IFPAB_TXD6_C
IFPAB_TXD4C_C*
IFPAB_TXD4C_C
IFPAB_TXD5C_C*
IFPAB_TXD5C_C
IFPAB_TXD6C_C*
IFPAB_TXD6C_C
IN
BI
I2CA_SCL
I2CA_SDA
DACA_VSYNC_C
GPIO14_DVI_HPD_C
DACA_RED_C
DACA_GREEN_C
DACA_BLUE_C
DACA_HSYNC_C
9
DDC_5V
C10
100PF
J4
DVI_I_(SLIM_)SHLD
CON_DVII_030_RA_F_SHD
COMMON
25 SHIELD3
26 SHIELD4
29 SHIELD1
17 TX0-
18 TX0+
9 TX1-
10 TX1+
1 TX2-
2 TX2+
3 SHLD24
11 SHLD13
19 SHLD05
12 TX3-
13 TX3+
4 TX4-
5 TX4+
20 TX5-
21 TX5+
6 DDCC
7 DDCD
14 VDDC
15 GND
22 SHLDC
24 TXC-
23 TXC+
8 VSYNC
16 HPD
C1 R
C2 G
C3 B
C5 AGND1
C5A AGND2
C4 HSYNC
30 SHIELD2
27 SHIELD5
28 SHIELD6
R656
R655
R654
R653
R652
R651
499
1%
Q520
1G1D1S
IFPB_TEM_EN
D
G
S
60V
0.3A
2R@10V
0.8A
0.35W
+/-20V
U4529
U4530
U4531
U4535
NC
ESD-ESD3V3U4ULC-RH
VVVV28006S
D0G-05A0300-I14
IFPAB_TXD0*
IFPAB_TXD0
IFPAB_TXD1*
IFPAB_TXD1
IFPAB_TXD2*
IFPAB_TXD2
IFPAB_TXD4C_C*
IFPAB_TXD4C_C
IFPAB_TXD5C_C*
IFPAB_TXD5C_C
IFPAB_TXD6C_C*
IFPAB_TXD6C_C
IFPA_TXC*
IFPA_TXC

Option 1: TI :TPS73201DBV @ 1% Vout Tolerance

Option 2: EM1105 @ 1.5% Vout tolerance

2.5V output Power dissapation = 0.16W = (3.3-2.5)x200mA

TPS73601QDBVR Internal VREF = 1.2V

EM1105 Internal VREF = 0.8

VOUT = VREF*(R1+R2)/R2

2.57V = 1.2*(39.2K+36.5K)/36.5K

2.52V = 0.8*(21.5K+10K)/10K

MICRO-STAR INT'L CO.,LTD

MS-V280

Size	Document Description	Rev
Custom	01_Table of Contents	1.0

Date: Tuesday, August 14, 2012 Sheet 10 of 25

MSI CONFIDENTIAL 00017967 RD(C)20130306 01onepei(裴亮樂) 00011601 RMA工程課

IFPC mHDMI

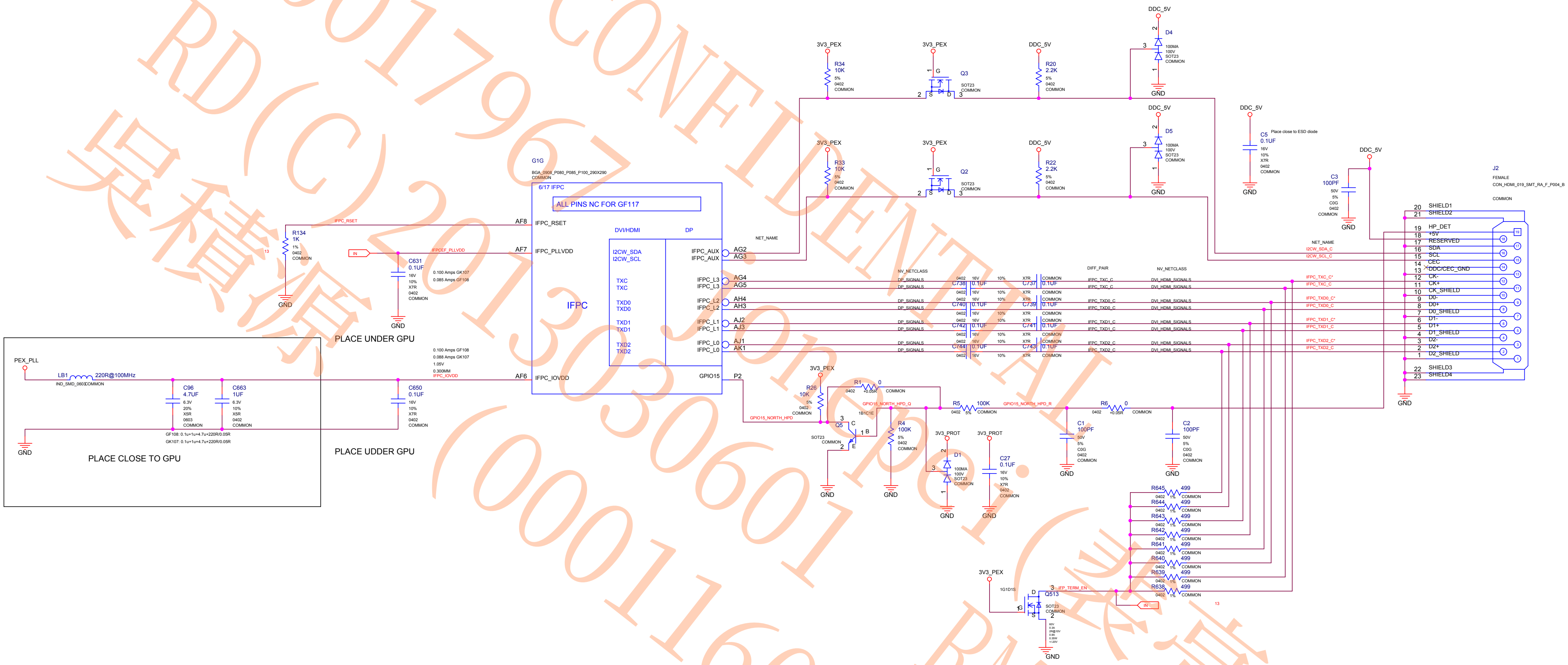
G1G
BGA_0908_P080_P085_P100_290X290
COMMON
6/17 IFPC
ALL PINS NC FOR GF117
IFPC
DVI/HDMI
DP
AF8 IFPC_RSET
AF7 IFPC_PLLVDD
AF6 IFPC_IOVDD
I2CW_SDA
I2CW_SCL
TXC
TXC
TXD0
TXD0
TXD1
TXD1
TXD2
TXD2
IFPC_AUX AG2
IFPC_AUX AG3
IFPC_L3 AG4
IFPC_L3 AG5
IFPC_L2 AH4
IFPC_L2 AH3
IFPC_L1 AJ2
IFPC_L1 AJ3
IFPC_L0 AJ1
IFPC_L0 AK1
GPIO15 P2
IFPC_RSET
R134 1K 1% 0402 COMMON
13
GND
IN
IFPCEF_PLLVDD
C631 0.1UF 16V 10% X7R 0402 COMMON
0.100 Amps GK107
0.085 Amps GF108
GND
PLACE UNDER GPU
PEX_PLL
LB1 220R@100MHz
IND_SMD_0603 COMMON
C96 4.7UF 6.3V 20% X5R 0603 COMMON
C663 1UF 6.3V 10% X5R 0402 COMMON
GF108: 0.1u+1u+4.7u+220R/0.05R
GK107: 0.1u+1u+4.7u+220R/0.05R
GND
PLACE CLOSE TO GPU
0.100 Amps GF108
0.088 Amps GK107
1.05V
0.300MM
IFPC_IOVDD
C650 0.1UF 16V 10% X7R 0402 COMMON
PLACE UDDER GPU
3V3_PEX
R34 10K 5% 0402 COMMON
3V3_PEX
Q3 SOT23 COMMON
G S D
DDC_5V
R20 2.2K 5% 0402 COMMON
DDC_5V
D4 100MA 100V SOT23 COMMON
GND
3V3_PEX
R33 10K 5% 0402 COMMON
3V3_PEX
Q2 SOT23 COMMON
DDC_5V
R22 2.2K 5% 0402 COMMON
DDC_5V
D5 100MA 100V SOT23 COMMON
GND
DDC_5V
C5 0.1UF 16V 10% X7R 0402 COMMON
Place close to ESD diode
GND
DDC_5V
C3 100PF 50V 5% C0G 0402 COMMON
GND
NET_NAME
I2CW_SDA_C
I2CW_SCL_C
NV_NETCLASS
DP_SIGNALS
C738 0.1UF 0402 16V 10%
C737 0.1UF X7R COMMON
C740 0.1UF
C739 0.1UF
C742 0.1UF
C741 0.1UF
C744 0.1UF
C743 0.1UF
DIFF_PAIR
IFPC_TXC_C
IFPC_TXD0_C
IFPC_TXD1_C
IFPC_TXD2_C
NV_NETCLASS
DVI_HDMI_SIGNALS
IFPC_TXC_C*
IFPC_TXC_C
IFPC_TXD0_C*
IFPC_TXD0_C
IFPC_TXD1_C*
IFPC_TXD1_C
IFPC_TXD2_C*
IFPC_TXD2_C
J2
FEMALE
CON_HDMI_019_SMT_RA_F_P004_B
COMMON
20 SHIELD1
21 SHIELD2
19 HP_DET
18 +5V
17 RESERVED
16 SDA
15 SCL
14 CEC
13 DDC/CEC_GND
12 CK-
11 CK+
10 CK_SHIELD
9 D0-
8 D0+
7 D0_SHIELD
6 D1-
5 D1+
4 D1_SHIELD
3 D2-
2 D2+
1 D2_SHIELD
22 SHIELD3
23 SHIELD4
GND
3V3_PEX
R26 10K 5% 0402 COMMON
GPIO15_NORTH_HPD
R1 0 0402 +0.05R COMMON
GPIO15_NORTH_HPD_Q
1B1C1E
Q5 SOT23 COMMON
C B E
GND
R4 100K 5% 0402 COMMON
GND
R5 100K 0402 5% COMMON
GPIO15_NORTH_HPD_R
R6 0 0402 +0.05R COMMON
3V3_PROT
D1 100MA 100V SOT23 COMMON
GND
3V3_PROT
C27 0.1UF 16V 10% X7R 0402 COMMON
GND
C1 100PF 50V 5% C0G 0402 COMMON
GND
C2 100PF 50V 5% C0G 0402 COMMON
GND
R645 499 0402 1% COMMON
R644 499 0402 1% COMMON
R643 499 0402 1% COMMON
R642 499 0402 1% COMMON
R641 499 0402 1% COMMON
R640 499 0402 1% COMMON
R639 499 0402 1% COMMON
R638 499 0402 1% COMMON
3V3_PEX
1G1D1S
Q513 SOT23 COMMON
IFP_TERM_EN
IN
13
60V 0.3A 2R@10V 0.8A 0.35W +/-20V
GND

MICRO-STAR INT'L CO.,LTD

MS-V280

Size	Document Description	Rev
Custom	01_Table of Contents	1.0

Date: Tuesday, August 14, 2012 Sheet 11 of 25

MSI CONFIDENTIAL
00017967
RD(C)吳積源
2013030601
(00011601) RMA工程課

IFPC DP

remove J1

MSI CONFIDENTIAL
00017967 jonepei(裴亮樂)
RD(C)2013030601 RMA工程課
吳積源 (00011601)

MICRO-STAR INT'L CO.,LTD
MS-V280
Size Custom
Document Description 01_Table of Contents
Rev 1.0
Date: Tuesday, August 14, 2012
Sheet 12 of 25

IFPEF TMDS

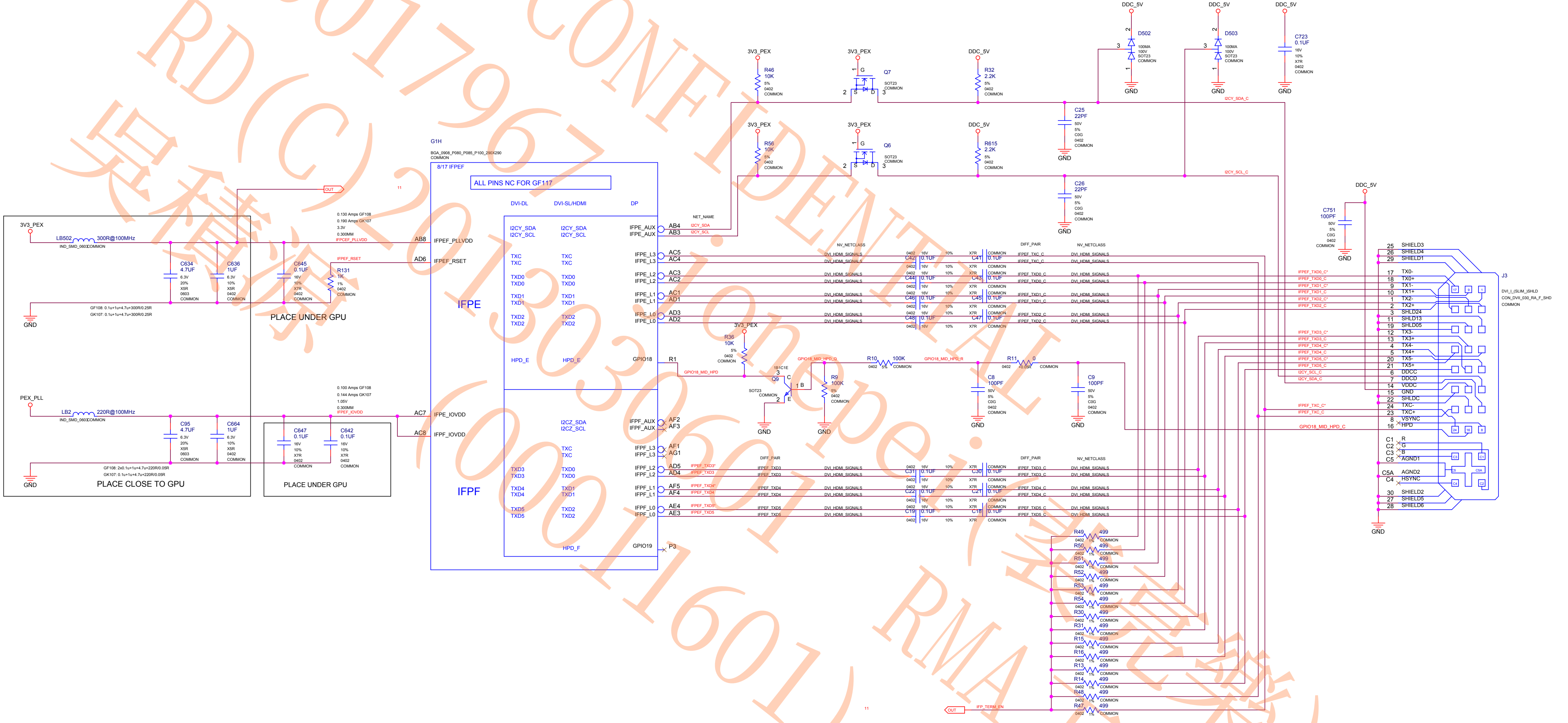
3V3_PEX
LB502 300R@100MHz
IND_SMD_0603 COMMON
C634 4.7UF 6.3V 20% X5R 0603 COMMON
C636 1UF 6.3V 10% X5R 0402 COMMON
C645 0.1UF 16V 10% X7R 0402 COMMON
R131 1K 1% 0402 COMMON
GND
GF108: 0.1u+1u+4.7u+300R/0.25R
GK107: 0.1u+1u+4.7u+300R/0.25R
PLACE UNDER GPU
OUT
11
0.130 Amps GF108
0.190 Amps GK107
3.3V
0.300MM
IFPCEF_PLLVDD
IFPEF_RSET
AB8
AD6
PEX_PLL
LB2 220R@100MHz
IND_SMD_0603 COMMON
C95 4.7UF 6.3V 20% X5R 0603 COMMON
C664 1UF 6.3V 10% X5R 0402 COMMON
C647 0.1UF 16V 10% X7R 0402 COMMON
C642 0.1UF 16V 10% X7R 0402 COMMON
GF108: 2x0.1u+1u+4.7u+220R/0.05R
GK107: 0.1u+1u+4.7u+220R/0.05R
PLACE CLOSE TO GPU
PLACE UNDER GPU
0.100 Amps GF108
0.144 Amps GK107
1.05V
0.300MM
IFPEF_IOVDD
AC7
AC8
G1H
BGA_0908_P080_P085_P100_290X290
COMMON
8/17 IFPEF
ALL PINS NC FOR GF117
DVI-DL
DVI-SL/HDMI
DP
IFPEF_PLLVDD
IFPEF_RSET
IFPE_IOVDD
IFPF_IOVDD
IFPE
IFPF
I2CY_SDA
I2CY_SCL
TXC
TXD0
TXD1
TXD2
HPD_E
I2CZ_SDA
I2CZ_SCL
TXD3
TXD4
TXD5
HPD_F
IFPE_AUX
IFPE_L3
IFPE_L2
IFPE_L1
IFPE_L0
GPIO18
IFPF_AUX
IFPF_L3
IFPF_L2
IFPF_L1
IFPF_L0
GPIO19
AB4
AB3
AC5
AC4
AC3
AC2
AC1
AD1
AD3
AD2
R1
AF2
AF3
AF1
AG1
AD5
AD4
AF5
AF4
AE4
AE3
P3
NET_NAME
I2CY_SDA
I2CY_SCL
NV_NETCLASS
DVI_HDMI_SIGNALS
DIFF_PAIR
IFPEF_TXD3*
IFPEF_TXD3
IFPEF_TXD4*
IFPEF_TXD4
IFPEF_TXD5*
IFPEF_TXD5
C42 0.1UF
C41 0.1UF
C44 0.1UF
C43 0.1UF
C46 0.1UF
C45 0.1UF
C48 0.1UF
C47 0.1UF
C31 0.1UF
C30 0.1UF
C22 0.1UF
C21 0.1UF
C19 0.1UF
C18 0.1UF
0402 16V 10% X7R COMMON
IFPEF_TXC_C
IFPEF_TXD0_C
IFPEF_TXD1_C
IFPEF_TXD2_C
IFPEF_TXD3_C
IFPEF_TXD4_C
IFPEF_TXD5_C
3V3_PEX
R46 10K 5% 0402 COMMON
R56 10K 5% 0402 COMMON
Q7 SOT23 COMMON
Q6 SOT23 COMMON
G S D
DDC_5V
R32 2.2K 5% 0402 COMMON
R615 2.2K 5% 0402 COMMON
C25 22PF 50V 5% C0G 0402 COMMON
C26 22PF 50V 5% C0G 0402 COMMON
D502 100MA 100V SOT23 COMMON
D503 100MA 100V SOT23 COMMON
C723 0.1UF 16V 10% X7R 0402 COMMON
I2CY_SDA_C
I2CY_SCL_C
R36 10K 5% 0402 COMMON
GPIO18_MID_HPD
1B1C1E
Q9 SOT23 COMMON
C B E
GPIO18_MID_HPD_Q
R9 100K 5% 0402 COMMON
R10 100K 0402 5% COMMON
GPIO18_MID_HPD_R
R11 0 0402 +0.05R COMMON
C8 100PF 50V 5% C0G 0402 COMMON
C9 100PF 50V 5% C0G 0402 COMMON
GPIO18_MID_HPD_C
R49 499
R50 499
R51 499
R52 499
R53 499
R54 499
R30 499
R31 499
R15 499
R16 499
R13 499
R14 499
R48 499
R47 499
0402 1% COMMON
IFP_TERM_EN
OUT
11
DDC_5V
C751 100PF 50V 5% C0G 0402 COMMON
IFPEF_TXD0_C*
IFPEF_TXD1_C*
IFPEF_TXD2_C*
IFPEF_TXD3_C*
IFPEF_TXD4_C*
IFPEF_TXD5_C*
IFPEF_TXC_C*
J3
DVI_I_(SLIM_)SHLD
CON_DVII_030_RA_F_SHD
COMMON
25 SHIELD3
26 SHIELD4
29 SHIELD1
17 TX0-
18 TX0+
9 TX1-
10 TX1+
1 TX2-
2 TX2+
3 SHLD24
11 SHLD13
19 SHLD05
12 TX3-
13 TX3+
4 TX4-
5 TX4+
20 TX5-
21 TX5+
6 DDCC
7 DDCD
14 VDDC
15 GND
22 SHLDC
24 TXC-
23 TXC+
8 VSYNC
16 HPD
C1 R
C2 G
C3 B
C5 AGND1
C5A AGND2
C4 HSYNC
30 SHIELD2
27 SHIELD5
28 SHIELD6
GND

MICRO-STAR INT'L CO.,LTD
MS-V280
Size Custom
Document Description 01_Table of Contents
Rev 1.0
Date: Tuesday, August 14, 2012
Sheet 13 of 25

MSI 00017967 CONFIDENTIAL RD(C)吳楨源(20130601) RMA工程課

IFPE Long HDMI

remove J5

MSI CONFIDENTIAL
00017967 jonepei(裴亮樂)
RD(C)2013030601 RMA工程課
吳積源(00011601)

MICRO-STAR INT'L CO.,LTD
MS-V280
Size Custom
Document Description 01_Table of Contents
Rev 1.0
Date: Tuesday, August 14, 2012

Core Decoupling,GPU_VDD_3V3

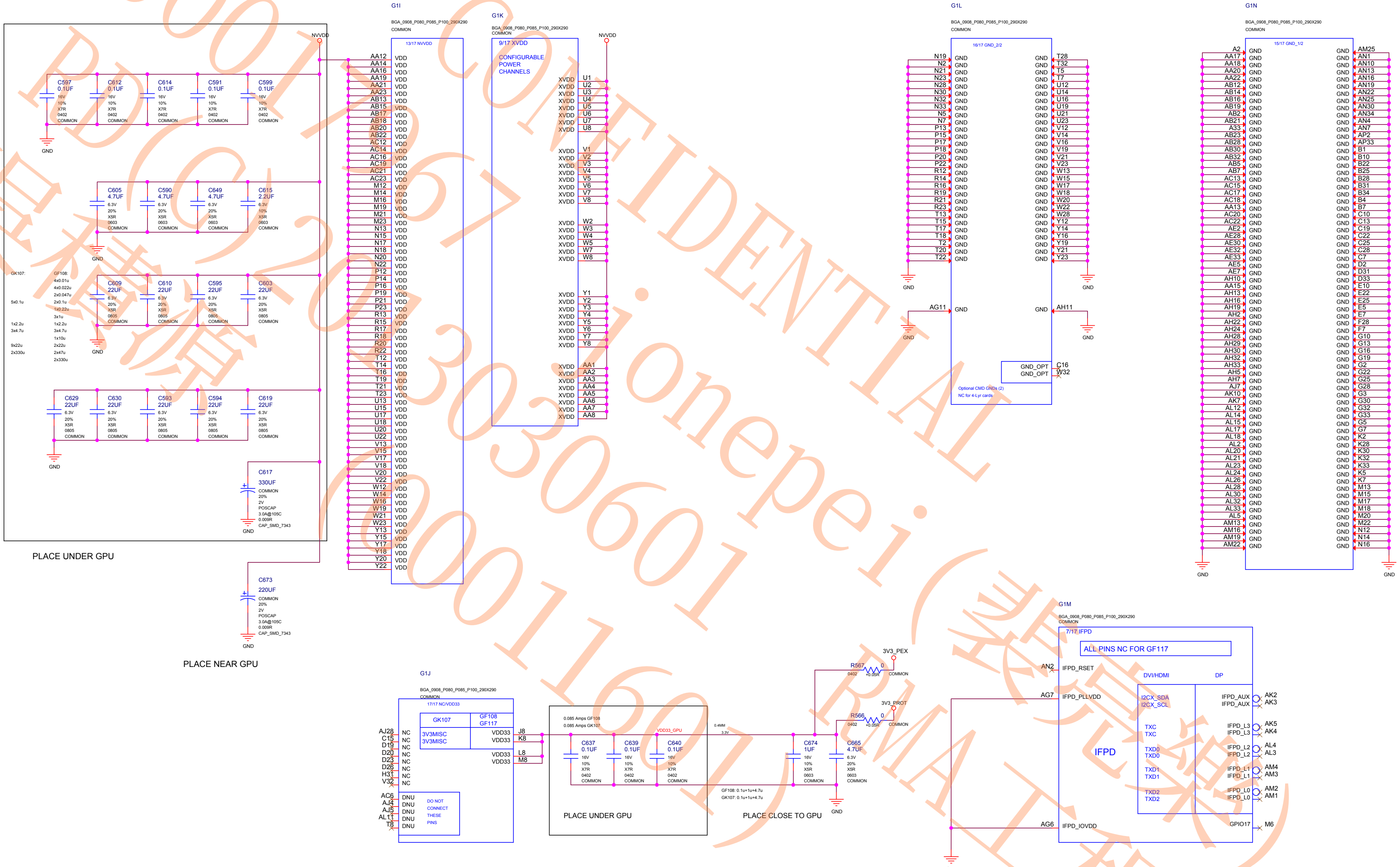

NVVDD
C597 0.1UF 16V 10% X7R 0402 COMMON
C612 0.1UF 16V 10% X7R 0402 COMMON
C614 0.1UF 16V 10% X7R 0402 COMMON
C591 0.1UF 16V 10% X7R 0402 COMMON
C599 0.1UF 16V 10% X7R 0402 COMMON
C605 4.7UF 6.3V 20% X5R 0603 COMMON
C590 4.7UF 6.3V 20% X5R 0603 COMMON
C649 4.7UF 6.3V 20% X5R 0603 COMMON
C615 2.2UF 6.3V 10% X5R 0603 COMMON
GK107: 5x0.1u 1x2.2u 3x4.7u 9x22u 2x330u
GF108: 4x0.01u 4x0.022u 2x0.047u 2x0.1u 1x0.22u 3x1u 1x2.2u 3x4.7u 1x10u 2x22u 2x47u 2x330u
C609 22UF 6.3V 20% X5R 0805 COMMON
C610 22UF 6.3V 20% X5R 0805 COMMON
C595 22UF 6.3V 20% X5R 0805 COMMON
C603 22UF 6.3V 20% X5R 0805 COMMON
C629 22UF 6.3V 20% X5R 0805 COMMON
C630 22UF 6.3V 20% X5R 0805 COMMON
C593 22UF 6.3V 20% X5R 0805 COMMON
C594 22UF 6.3V 20% X5R 0805 COMMON
C619 22UF 6.3V 20% X5R 0805 COMMON
C617 330UF COMMON 20% 2V POSCAP 3.0A@105C 0.009R CAP_SMD_7343
GND
PLACE UNDER GPU
C673 220UF COMMON 20% 2V POSCAP 3.0A@105C 0.009R CAP_SMD_7343
PLACE NEAR GPU
G1I BGA_0908_P080_P085_P100_290X290 COMMON 13/17 NVVDD
VDD: AA12 AA14 AA16 AA19 AA21 AA23 AB13 AB15 AB17 AB18 AB20 AB22 AC12 AC14 AC16 AC19 AC21 AC23 M12 M14 M16 M19 M21 M23 N13 N15 N17 N18 N20 N22 P12 P14 P16 P19 P21 P23 R13 R15 R17 R18 R20 R22 T12 T14 T16 T19 T21 T23 U13 U15 U17 U18 U20 U22 V13 V15 V17 V18 V20 V22 W12 W14 W16 W19 W21 W23 Y13 Y15 Y17 Y18 Y20 Y22
G1K BGA_0908_P080_P085_P100_290X290 COMMON 9/17 XVDD
CONFIGURABLE POWER CHANNELS
XVDD: U1 U2 U3 U4 U5 U6 U7 U8 V1 V2 V3 V4 V5 V6 V7 V8 W2 W3 W4 W5 W7 W8 Y1 Y2 Y3 Y4 Y5 Y6 Y7 Y8 AA1 AA2 AA3 AA4 AA5 AA6 AA7 AA8
G1L BGA_0908_P080_P085_P100_290X290 COMMON 16/17 GND_2/2
GND: N19 N2 N21 N23 N28 N30 N32 N33 N5 N7 P13 P15 P17 P18 P20 P22 R12 R14 R16 R19 R21 R23 T13 T15 T17 T18 T2 T20 T22
GND: T28 T32 T5 T7 U12 U14 U16 U19 U21 U23 V12 V14 V16 V19 V21 V23 W13 W15 W17 W18 W20 W22 W28 Y12 Y14 Y16 Y19 Y21 Y23
AG11 GND / GND AH11
GND_OPT C16 / GND_OPT W32
Optional CMD GNDs (2)
NC for 4-Lyr cards
G1N BGA_0908_P080_P085_P100_290X290 COMMON 15/17 GND_1/2
GND: A2 AA17 AA18 AA20 AA22 AB12 AB14 AB16 AB19 AB2 AB21 A33 AB23 AB28 AB30 AB32 AB5 AB7 AC13 AC15 AC17 AC18 AA13 AC20 AC22 AE2 AE28 AE30 AE32 AE33 AE5 AE7 AH10 AA15 AH13 AH16 AH19 AH2 AH22 AH24 AH28 AH29 AH30 AH32 AH33 AH5 AH7 AJ7 AK10 AK7 AL12 AL14 AL15 AL17 AL18 AL2 AL20 AL21 AL23 AL24 AL26 AL28 AL30 AL32 AL33 AL5 AM13 AM16 AM19 AM22
GND: AM25 AN1 AN10 AN13 AN16 AN19 AN22 AN25 AN30 AN34 AN4 AN7 AP2 AP33 B1 B10 B22 B25 B28 B31 B34 B4 B7 C10 C13 C19 C22 C25 C28 C7 D2 D31 D33 E10 E22 E25 E5 E7 F28 F7 G10 G13 G16 G19 G2 G22 G25 G28 G3 G30 G32 G33 G5 G7 K2 K28 K30 K32 K33 K5 K7 M13 M15 M17 M18 M20 M22 N12 N14 N16
G1J BGA_0908_P080_P085_P100_290X290 COMMON 17/17 NC/VDD33
NC: AJ28 C15 D19 D20 D23 D26 H31 V32
GK107 3V3MISC 3V3MISC / GF108 GF117 VDD33 J8 VDD33 K8 VDD33 L8 VDD33 M8
DNU: AC6 AJ4 AJ5 AL11 T8
DO NOT CONNECT THESE PINS
0.085 Amps GF108
0.085 Amps GK107
VDD33_GPU
0.4MM 3.3V
C637 0.1UF 16V 10% X7R 0402 COMMON
C639 0.1UF 16V 10% X7R 0402 COMMON
C640 0.1UF 16V 10% X7R 0402 COMMON
C674 1UF 16V 10% X5R 0603 COMMON
C665 4.7UF 6.3V 20% X5R 0603 COMMON
GF108: 0.1u+1u+4.7u
GK107: 0.1u+1u+4.7u
PLACE UNDER GPU
PLACE CLOSE TO GPU
3V3_PEX
R567 0 0402 +0.05R COMMON
3V3_PROT
R566 0 0402 +0.05R COMMON
G1M BGA_0908_P080_P085_P100_290X290 COMMON 7/17 IFPD
ALL PINS NC FOR GF117
AN2 IFPD_RSET
AG7 IFPD_PLLVDD
AG6 IFPD_IOVDD
IFPD
DVI/HDMI
DP
I2CX_SDA
I2CX_SCL
TXC TXC
TXD0 TXD0
TXD1 TXD1
TXD2 TXD2
IFPD_AUX AK2
IFPD_AUX AK3
IFPD_L3 AK5
IFPD_L3 AK4
IFPD_L2 AL4
IFPD_L2 AL3
IFPD_L1 AM4
IFPD_L1 AM3
IFPD_L0 AM2
IFPD_L0 AM1
GPIO17 M6

MSI 0001167 CONFIDENTIAL jonepei RMA工程課

MSI	**MICRO-STAR INT'L CO.,LTD**	
	MS-V280	
Size Custom	Document Description 01_Table of Contents	Rev 1.0
Date: Tuesday, August 14, 2012	Sheet 15 of 25	

Misc Interfaces

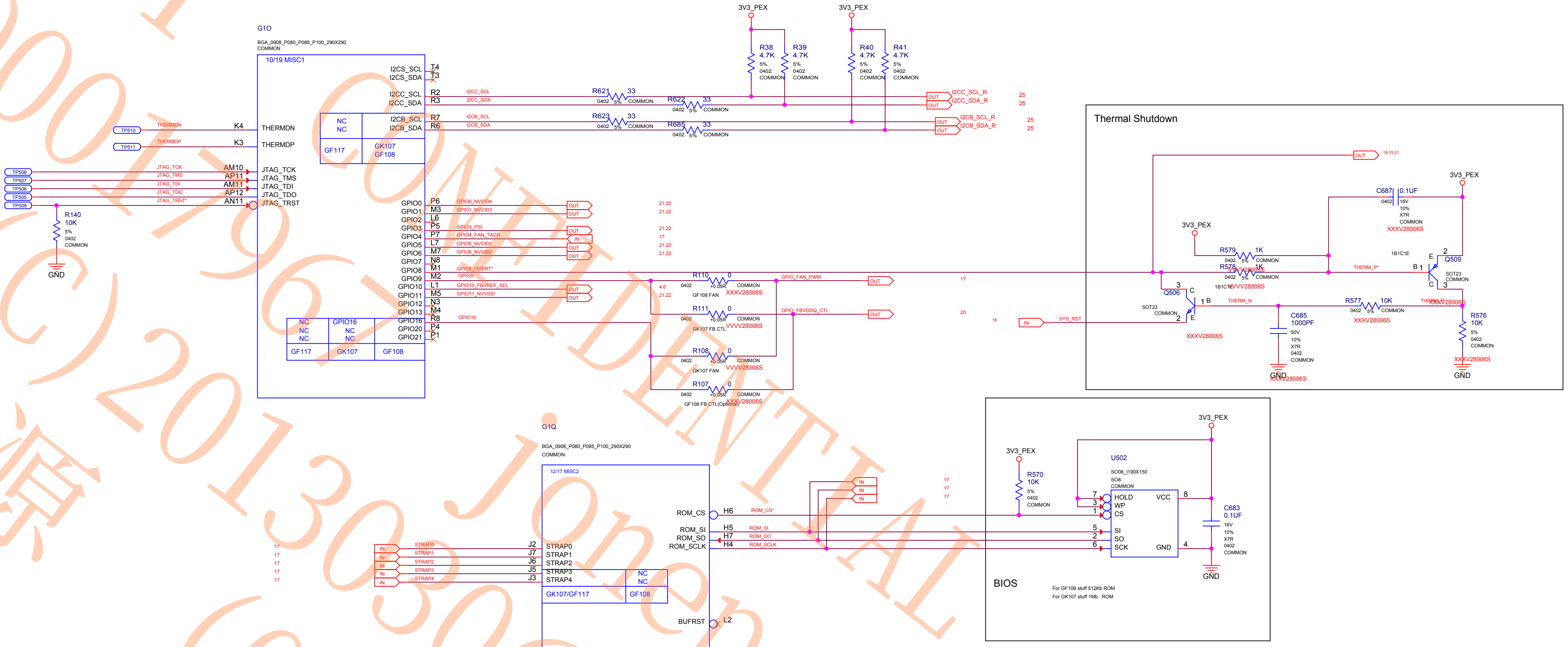
G1O
BGA_0908_P080_P085_P100_290X290
COMMON
10/19 MISC1
I2CS_SCL T4
I2CS_SDA T3
I2CC_SCL R2
I2CC_SDA R3
I2CB_SCL R7
I2CB_SDA R6
NC NC GF117 GK107 GF108
THERMDN K4
THERMDP K3
TP510 TP511
JTAG_TCK AM10
JTAG_TMS AP11
JTAG_TDI AM11
JTAG_TDO AP12
JTAG_TRST* AN11
TP508 TP507 TP506 TP505 TP509
R140 10K 5% 0402 COMMON
GND
GPIO0 P6 GPIO0_NVVID4 OUT 21,22
GPIO1 M3 GPIO1_NVVID3 OUT 21,22
GPIO2 L6
GPIO3 P5 GPIO3_PSI OUT 21,22
GPIO4 P7 GPIO4_FAN_TACH IN 17
GPIO5 L7 GPIO5_NVVID1 OUT 21,22
GPIO6 M7 GPIO6_NVVID2 OUT 21,22
GPIO7 N8
GPIO8 M1 GPIO8_OVERT*
GPIO9 M2 GPIO9
GPIO10 L1 GPIO10_FBVREF_SEL OUT 4,6
GPIO11 M5 GPIO11_NVVID0 OUT 21,22
GPIO12 N3
GPIO13 M4
GPIO16 R8 GPIO16
GPIO20 P4
GPIO21 P1
NC NC NC GPIO16 NC NC GF117 GK107 GF108
3V3_PEX
R38 4.7K 5% 0402 COMMON
R39 4.7K 5% 0402 COMMON
R40 4.7K 5% 0402 COMMON
R41 4.7K 5% 0402 COMMON
R621 33 0402 5% COMMON
R622 33 0402 5% COMMON
R623 33 0402 5% COMMON
R685 33 0402 5% COMMON
I2CC_SCL_R 25
I2CC_SDA_R 25
I2CB_SCL_R 25
I2CB_SDA_R 25
R110 0 0402 +0.05R COMMON GF108 FAN XXXV28006S
R111 0 0402 +0.05R COMMON GK107 FB CTL VVVV28006S
R108 0 0402 +0.05R COMMON GK107 FAN VVVV28006S
R107 0 0402 +0.05R COMMON GF108 FB CTL(Optional) XXXV28006S
GPIO_FAN_PWM OUT 17
GPIO_FBVDDQ_CTL OUT 20
Thermal Shutdown
OUT 18,19,21
C687 0.1UF 0402 16V 10% X7R COMMON XXXV28006S
R579 1K 0402 5% COMMON
R578 1K 0402 5% COMMON VVVV28006S
1B1C1E
Q509 SOT23 COMMON
THERM_P*
Q506 SOT23 COMMON XXXV28006S
THERM_N
SYS_RST IN 18
C685 1000PF 50V 10% X7R 0402 COMMON XXXV28006S
R577 10K 0402 5% COMMON XXXV28006S
R576 10K 5% 0402 COMMON XXXV28006S
G1Q
BGA_0908_P080_P085_P100_290X290
COMMON
12/17 MISC2
ROM_CS H6 ROM_CS*
ROM_SI H5 ROM_SI
ROM_SO H7 ROM_SO
ROM_SCLK H4 ROM_SCLK
IN 17
STRAP0 J2
STRAP1 J7
STRAP2 J6
STRAP3 J5
STRAP4 J3
NC NC GK107/GF117 GF108
BUFRST L2
CEC L3
BIOS
U502 SO08_I190X150 SO8 COMMON
HOLD WP CS SI SO SCK VCC GND
R570 10K 5% 0402 COMMON
C683 0.1UF 16V 10% X7R 0402 COMMON
For GF108 stuff 512Kb ROM
For GK107 stuff 1Mb ROM

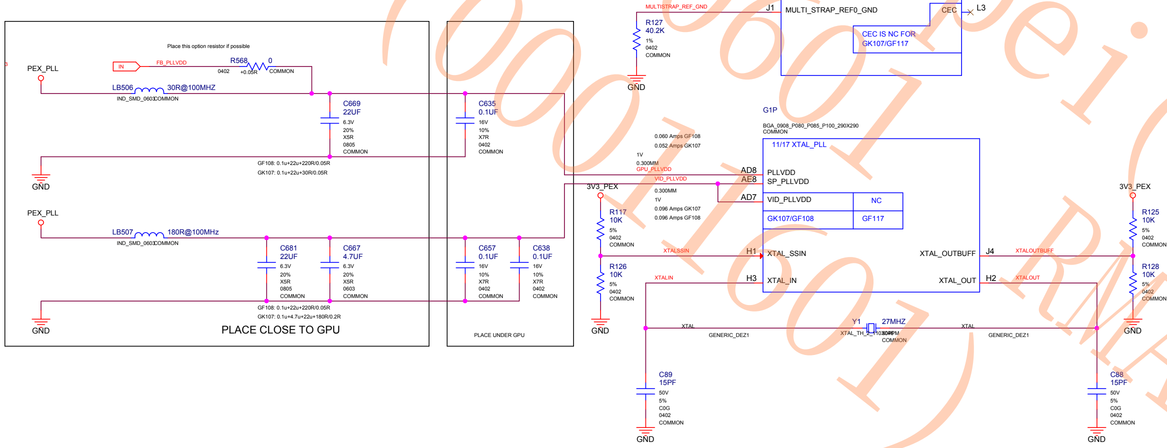
MULTISTRAP_REF_GND J1 MULTI_STRAP_REF0_GND
CEC IS NC FOR GK107/GF117
R127 40.2K 1% 0402 COMMON
GND
Place this option resistor if possible
PEX_PLL
IN FB_PLLVDD
R568 0 0402 +0.05R COMMON
LB506 30R@100MHZ IND_SMD_0603 COMMON
C669 22UF 6.3V 20% X5R 0805 COMMON
C635 0.1UF 16V 10% X7R 0402 COMMON
GF108: 0.1u+22u+220R/0.05R
GK107: 0.1u+22u+30R/0.05R
LB507 180R@100MHz IND_SMD_0603 COMMON
C681 22UF 6.3V 20% X5R 0805 COMMON
C667 4.7UF 6.3V 20% X5R 0603 COMMON
C657 0.1UF 16V 10% X7R 0402 COMMON
C638 0.1UF 16V 10% X7R 0402 COMMON
GF108: 0.1u+22u+220R/0.05R
GK107: 0.1u+4.7u+22u+180R/0.2R
PLACE CLOSE TO GPU
PLACE UNDER GPU
G1P
BGA_0908_P080_P085_P100_290X290
COMMON
11/17 XTAL_PLL
0.060 Amps GF108
0.052 Amps GK107
1V
0.300MM
GPU_PLLVDD AD8 PLLVDD
VID_PLLVDD AE8 SP_PLLVDD
AD7 VID_PLLVDD NC GK107/GF108 GF117
0.300MM 1V
0.096 Amps GK107
0.096 Amps GF108
3V3_PEX
R117 10K 5% 0402 COMMON
R126 10K 5% 0402 COMMON
XTALSSIN H1 XTAL_SSIN
XTALIN H3 XTAL_IN
XTAL_OUTBUFF J4 XTALOUTBUFF
XTAL_OUT H2 XTALOUT
R125 10K 5% 0402 COMMON
R128 10K 5% 0402 COMMON
Y1 27MHZ XTAL_TH_2_1 30PPM COMMON
XTAL GENERIC_DEZ1
C89 15PF 50V 5% C0G 0402 COMMON
C88 15PF 50V 5% C0G 0402 COMMON
GND

XTALSSIN	XTALOUTBUFF	SmartFan PWM %
PU	PU	66
PU	PD	50
PD	PU	33
PD	PD	0

MICRO-STAR INT'L CO.,LTD

MS-V280

Size: Custom
Document Description: 01_Table of Contents
Rev: 1.0
Date: Tuesday, August 14, 2012 Sheet 16 of 25

MSI 00017967 RD(C)2013/06/01 吳積源
CONFIDENTIAL Jonewei(秦亮樂) RMA 工程課

Straps, Thermal, Mechanical

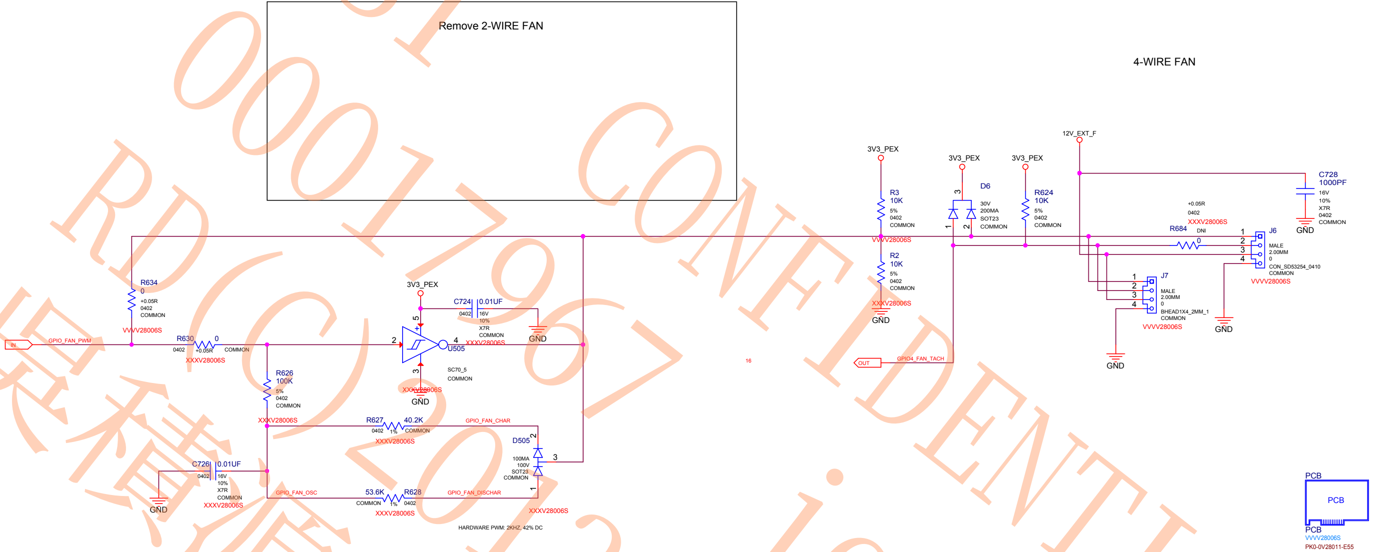
Remove 2-WIRE FAN
4-WIRE FAN
IN
GPIO_FAN_PWM
16
R634
0
+0.05R
0402
COMMON
VVVV28006S
R630
0
0402
+0.05R
COMMON
XXXV28006S
3V3_PEX
C724
0.01UF
0402
16V
10%
X7R
COMMON
XXXV28006S
GND
2
5
4
3
U505
SC70_5
COMMON
XXXV28006S
GND
R626
100K
5%
0402
COMMON
XXXV28006S
R627
40.2K
0402
1%
COMMON
XXXV28006S
GPIO_FAN_CHAR
D505
100MA
100V
SOT23
COMMON
XXXV28006S
C726
0.01UF
0402
16V
10%
X7R
COMMON
XXXV28006S
GND
GPIO_FAN_OSC
53.6K
R628
COMMON
1%
0402
XXXV28006S
GPIO_FAN_DISCHAR
HARDWARE PWM: 2KHZ, 42% DC
3V3_PEX
R3
10K
5%
0402
COMMON
VVVV28006S
R2
10K
5%
0402
COMMON
XXXV28006S
GND
3V3_PEX
D6
30V
200MA
SOT23
COMMON
3V3_PEX
R624
10K
5%
0402
COMMON
OUT
GPIO4_FAN_TACH
16
12V_EXT_F
C728
1000PF
16V
10%
X7R
0402
COMMON
GND
+0.05R
0402
XXXV28006S
R684
DNI
0
J6
MALE
2.00MM
0
CON_SD53254_0410
COMMON
VVVV28006S
J7
MALE
2.00MM
0
BHEAD1X4_2MM_1
COMMON
VVVV28006S
GND
GND
PCB
PCB
PCB
VVVV28006S
PK0-0V28011-E55

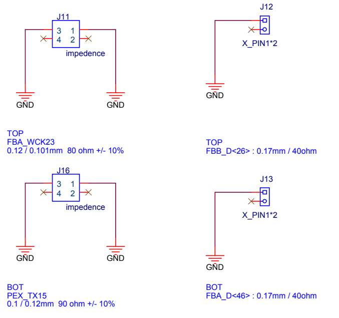
J11
impedence
GND
GND
TOP
FBA_WCK23
0.12 / 0.101mm 80 ohm +/- 10%
J16
impedence
GND
GND
BOT
PEX_TX15
0.1 / 0.12mm 90 ohm +/- 10%
J12
X_PIN1*2
GND
TOP
FBB_D<26> : 0.17mm / 40ohm
J13
X_PIN1*2
GND
BOT
FBA_D<46> : 0.17mm / 40ohm

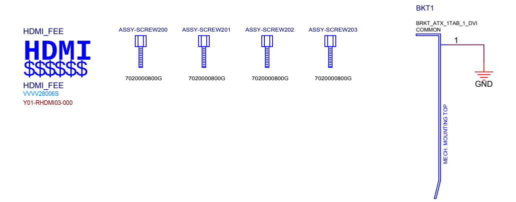
HDMI_FEE
HDMI
$$$$$$
HDMI_FEE
VVVV28006S
Y01-RHDMI03-000
ASSY-SCREW200
ASSY-SCREW201
ASSY-SCREW202
ASSY-SCREW203
7020000800G
7020000800G
7020000800G
7020000800G
BKT1
BRKT_ATX_1TAB_1_DVI
COMMON
1
GND
MECH. MOUNTING TOP

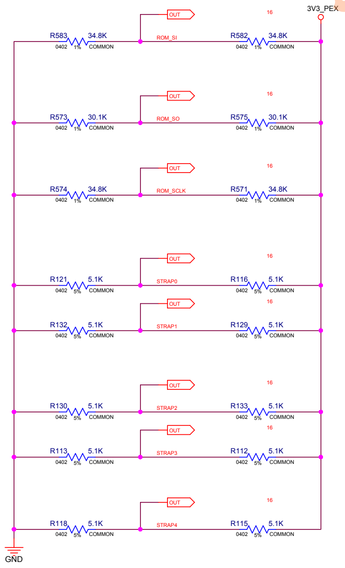
3V3_PEX
OUT
16
R583 34.8K 0402 1% COMMON
ROM_SI
R582 34.8K 0402 1% COMMON
OUT
16
R573 30.1K 0402 1% COMMON
ROM_SO
R575 30.1K 0402 1% COMMON
OUT
16
R574 34.8K 0402 1% COMMON
ROM_SCLK
R571 34.8K 0402 1% COMMON
OUT
16
R121 5.1K 0402 5% COMMON
STRAP0
R116 5.1K 0402 5% COMMON
OUT
16
R132 5.1K 0402 5% COMMON
STRAP1
R129 5.1K 0402 5% COMMON
OUT
16
R130 5.1K 0402 5% COMMON
STRAP2
R133 5.1K 0402 5% COMMON
OUT
16
R113 5.1K 0402 5% COMMON
STRAP3
R112 5.1K 0402 5% COMMON
OUT
16
R118 5.1K 0402 5% COMMON
STRAP4
R115 5.1K 0402 5% COMMON
GND

GK107 Straps

Bit Signal		Values			
03:	RAMCFG[3]	0000	64Mx16 128bit	1000	64Mx16 64bit
		0001	64Mx16 128bit Micron	1001	64Mx16 64bit Micron
02:	RAMCFG[2]	0010	64Mx16 128bit Hynix	1010	64Mx16 64bit Hynix
		0011	64Mx16 128bit Samsung	1011	64Mx16 64bit Samsung
01:	RAMCFG[1]	0100	128Mx16 128bit	1100	128Mx16 64bit
		0101	128Mx16 128bit Micron	1101	128Mx16 64bit Micron
00:	RAMCFG[0]	0110	128Mx16 128bit Hynix	1110	128Mx16 64bit Hynix
		0111	128Mx16 128bit Samsung	1111	128Mx16 64bit Samsung
03:	FB[1]	01	128MB		
02:	FB[0]				
01:	SMB_ALT_ADDR	0	DISABLED	1	ENABLED
00:	VGA_DEVICE	0	DISABLED	1	ENABLED
03:	PCI_DEVID_EXT	0	INIT		
02:	SUB_VENDOR	0	NO_BIOS	1	BIOS
01:	PCI_DEVID_EXT_BIT5	0	INIT		
00:	PEX_PLL_EN_TERM100	0	DISABLED	1	ENABLED
03:	USER[3]	0000	INIT		
02:	USER[2]				
01:	USER[1]				
00:	USER[0]				
03:	3GIO_PADCFG_LUT_ADR[3]	0000	DSKTOP_DEFAULT	1000	DSKTOP_HTHRS
		0001	MOBILE_DEFAULT	1001	MOBILE_HTHRS_NAMP
02:	3GIO_PADCFG_LUT_ADR[2]	0010	MOBILE_NTHRS_LLAMP	1010	MOBILE_HTHRS_LLAMP
		0011	MOBILE_NTHRS_LAMP	1011	MOBILE_HTHRS_LAMP
01:	3GIO_PADCFG_LUT_ADR[1]	0100	MOBILE_NTHRS_HAMP	1100	MOBILE_HTHRS_HAMP
		0101	MOBILE_NTHRS_HHAMP	1101	MOBILE_HTHRS_HHAMP
00:	3GIO_PADCFG_LUT_ADR[0]	0110	MOBILE_NTHRS_HHHAMP	1110	MOBILE_HTHRS_HHHAMP
		0111	MOBILE_NTHRS_HHHHAMP	1111	MOBILE_HTHRS_HHHHAMP
03:	PCI_DEVID[3]	0000	GK107-400-A1		
02:	PCI_DEVID[2]	0110	GK107-450-A1		
01:	PCI_DEVID[1]				
00:	PCI_DEVID[0]				
03:	SOR3_EXPOSED	0	DISABLED	1	ENABLED
02:	SOR2_EXPOSED	0	DISABLED	1	ENABLED
01:	SOR1_EXPOSED	0	DISABLED	1	ENABLED
00:	SOR0_EXPOSED	0	DISABLED	1	ENABLED
02:	PCIE_SPEED_CHANGE_GEN3	0	DISABLED	1	ENABLED
01:	PCIE_MAX_SPEED	0	GEN1	1	GEN23
00:	DP_PLL_VDD_3V3	0	USE1V8	1	USE3V3

GF108 Straps

Bit Signal		Values			
03:	RAMCFG[3]	0000	64Mx16 128bit	1000	64Mx16 64bit
		0001	64Mx16 128bit Micron	1001	64Mx16 64bit Micron
02:	RAMCFG[2]	0010	64Mx16 128bit Hynix	1010	64Mx16 64bit Hynix
		0011	64Mx16 128bit Samsung	1011	64Mx16 64bit Samsung
01:	RAMCFG[1]	0100	128Mx16 128bit	1100	128Mx16 64bit
		0101	128Mx16 128bit Micron	1101	128Mx16 64bit Micron
00:	RAMCFG[0]	0110	128Mx16 128bit Hynix	1110	128Mx16 64bit Hynix
		0111	128Mx16 128bit Samsung	1111	128Mx16 64bit Samsung
03:	XCLK_417	0	DISABLED	1	ENABLED
02:	FB[0]	1	128MB		
01:	SMB_ALT_ADDR	0	DISABLED	1	ENABLED
00:	VGA_DEVICE	0	DISABLED	1	ENABLED
03:	PCI_DEVID_EXT	0	GF108-450-A1		
02:	SUB_VENDOR	0	NO_BIOS	1	BIOS
01:	SLOT_CLK_CFG	0	DISABLED	1	ENABLED
00:	PEX_PLL_EN_TERM100	0	DISABLED	1	ENABLED
03:	USER[3]	0000	INIT		
02:	USER[2]				
01:	USER[1]				
00:	USER[0]				
03:	3GIO_PADCFG_LUT_ADR[3]	0000	DSKTOP_DEFAULT	1000	DSKTOP_HTHRS
		0001	MOBILE_DEFAULT	1001	MOBILE_HTHRS_NAMP
02:	3GIO_PADCFG_LUT_ADR[2]	0010	MOBILE_NTHRS_LLAMP	1010	MOBILE_HTHRS_LLAMP
		0011	MOBILE_NTHRS_LAMP	1011	MOBILE_HTHRS_LAMP
01:	3GIO_PADCFG_LUT_ADR[1]	0100	MOBILE_NTHRS_HAMP	1100	MOBILE_HTHRS_HAMP
		0101	MOBILE_NTHRS_HHAMP	1101	MOBILE_HTHRS_HHAMP
00:	3GIO_PADCFG_LUT_ADR[0]	0110	MOBILE_NTHRS_HHHAMP	1110	MOBILE_HTHRS_HHHAMP
		0111	MOBILE_NTHRS_HHHHAMP	1111	MOBILE_HTHRS_HHHHAMP
03:	PCI_DEVID[3]	1	GF108-450-A1		
02:	PCI_DEVID[2]				
01:	PCI_DEVID[1]				
00:	PCI_DEVID[0]				

Multilevel Straps

0000	5.1K to GND	1000	5.1K to VCC
0001	10K to GND	1001	10K to VCC
0010	15K to GND	1010	15K to VCC
0011	20K to GND	1011	20K to VCC
0100	24.9K to GND	1100	24.9K to VCC
0101	30.1K to GND	1101	30.1K to VCC
0110	34.8K to GND	1110	34.8K to VCC
0111	45.3K to GND	1111	45.3K to VCC

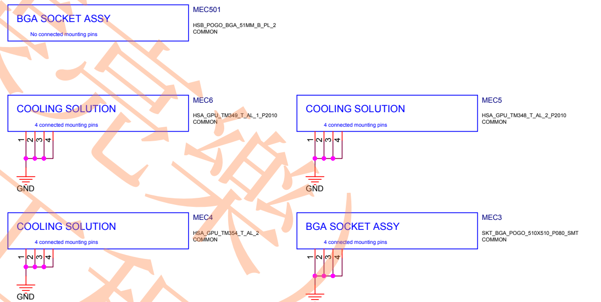
BGA SOCKET ASSY
No connected mounting pins
MEC501
HSB_POGO_BGA_51MM_B_PL_2
COMMON
COOLING SOLUTION
4 connected mounting pins
MEC6
HSA_GPU_TM349_T_AL_1_P2010
COMMON
GND
COOLING SOLUTION
4 connected mounting pins
MEC5
HSA_GPU_TM348_T_AL_2_P2010
COMMON
GND
COOLING SOLUTION
4 connected mounting pins
MEC4
HSA_GPU_TM354_T_AL_2
COMMON
GND
BGA SOCKET ASSY
4 connected mounting pins
MEC3
SKT_BGA_POGO_510X510_P080_SMT
COMMON
GND

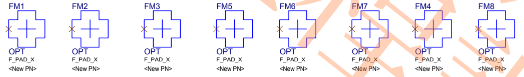
FM1
OPT
F_PAD_X
<New PN>
FM2
OPT
F_PAD_X
<New PN>
FM3
OPT
F_PAD_X
<New PN>
FM5
OPT
F_PAD_X
<New PN>
FM6
OPT
F_PAD_X
<New PN>
FM7
OPT
F_PAD_X
<New PN>
FM4
OPT
F_PAD_X
<New PN>
FM8
OPT
F_PAD_X
<New PN>

MICRO-STAR INT'L CO.,LTD

MS-V280

Size: Custom
Document Description: 01_Table of Contents
Rev: 1.0
Date: Tuesday, August 14, 2012

MSI CONFIDENTIAL jonebei

Power Supply I: Misc Power

Remove U501

315-0615-000: GS7105NV (2A) 2%
315-0614-000: GS7103NV (3A) 2%
315-0612-000: EM5103 (3A) 1.5%
315-0610-000: EM5102AGE (2A) 3%

VCNTL range
3.0~5.5V
3.0~5.5V
3.0~5.5V
3.0~5.5V

Vout = 0.8V * (1+Rt/Rb)
1.00V = 0.8V * (1+2.55k/10.2k)
1.05V = 0.8V * (1+3.65k/11.5k)

PEX_VDD = 1.05V @ 1.7A (GF108)
PEX_VDD = 1.05V @ 3.3A (GK107)

Remove U503

315-0610-000: EM5102AGE (2A) 3%
315-0615-000: GS7105NV (2A) 2%
315-0614-000: GS7103NV (3A) 2%

Vout = 0.8V * (1+Rt/Rb)
1.00V = 0.8V * (1+2.55k/10.2k)
1.05V = 0.8V * (1+3.65k/11.5k)

PEX_PLL = 1.05V @ 500mA (GF108)
PEX_PLL = 1.05V @ 537mA (GK107)

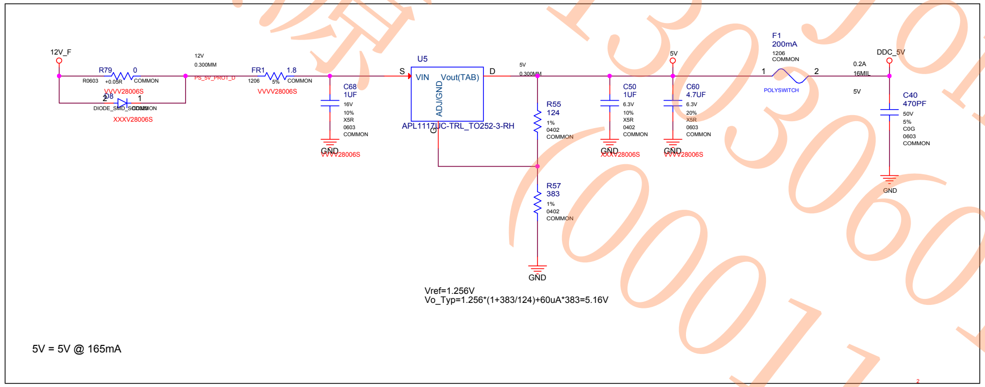
12V_F
R79
0
R0603
+0.05R
COMMON
VVVV28006S
D8
2
1
DIODE_SMD_SOD323
COMMON
XXXV28006S
12V
0.300MM
PS_5V_PROT_D
FR1
1.8
1206
5%
COMMON
VVVV28006S
C68
1UF
16V
10%
X5R
0603
COMMON
GND
VVVV28006S
U5
S
VIN
Vout(TAB)
ADJ/GND
D
APL1117UC-TRL_TO252-3-RH
5V
0.300MM
R55
124
1%
0402
COMMON
R57
383
1%
0402
COMMON
GND
C50
1UF
6.3V
10%
X5R
0402
COMMON
GND
XXXV28006S
5V
C60
4.7UF
6.3V
20%
X5R
0603
COMMON
GND
VVVV28006S
F1
200mA
1206
COMMON
1
2
POLYSWITCH
0.2A
16MIL
5V
DDC_5V
C40
470PF
50V
5%
C0G
0603
COMMON
GND
2

Vref=1.256V
Vo_Typ=1.256*(1+383/124)+60uA*383=5.16V

5V = 5V @ 165mA

Remove U3

3V3_FUSE = 3.3V @ 500mA

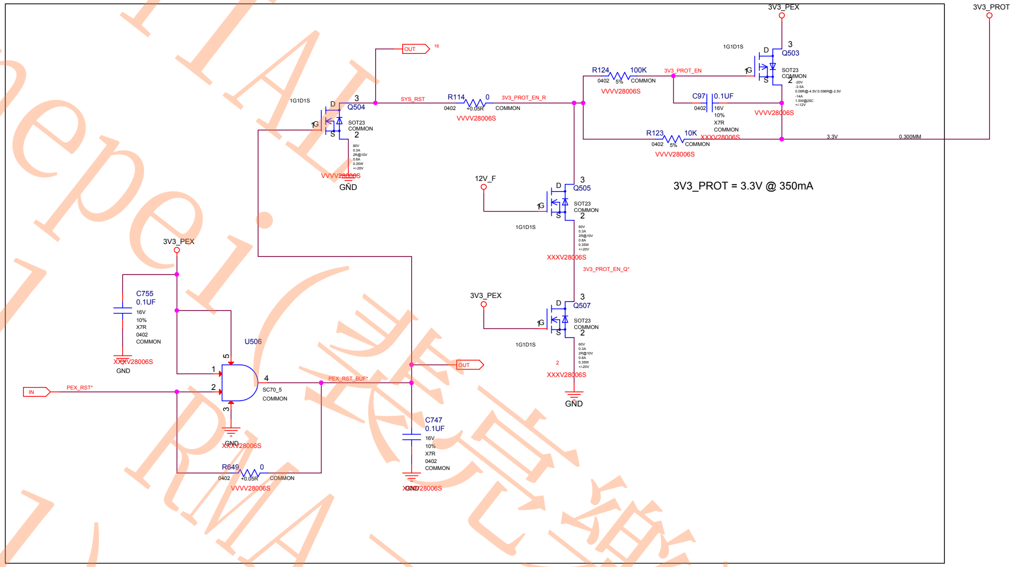
3V3_PEX
3V3_PROT
OUT
16
1G1D1S
D
Q503
3
1G
S
2
SOT23
COMMON
-20V
-3.5A
0.06R@-4.5V;0.096R@-2.5V
-14A
1.5W@25C
+/-12V
R124
100K
0402
5%
COMMON
VVVV28006S
3V3_PROT_EN
C97
0.1UF
0402
16V
10%
X7R
COMMON
VVVV28006S
R123
10K
0402
5%
COMMON
XXXV28006S
VVVV28006S
3.3V
0.300MM
1G1D1S
D
Q504
3
1G
S
2
SOT23
COMMON
60V
0.3A
2R@10V
0.8A
0.35W
+/-20V
VVVV28006S
GND
SYS_RST
R114
0
0402
+0.05R
COMMON
VVVV28006S
3V3_PROT_EN_R
12V_F
Q505
D
3
1G
S
2
SOT23
COMMON
1G1D1S
60V
0.3A
2R@10V
0.8A
0.35W
+/-20V
XXXV28006S
3V3_PROT_EN_Q*
3V3_PEX
Q507
D
3
1G
S
2
SOT23
COMMON
1G1D1S
60V
0.3A
2R@10V
0.8A
0.35W
+/-20V
2
XXXV28006S
GND
3V3_PEX
C755
0.1UF
16V
10%
X7R
0402
COMMON
XXXV28006S
GND
U506
5
1
2
3
4
SC70_5
COMMON
GND
XXXV28006S
IN
PEX_RST*
PEX_RST_BUF*
OUT
R649
0
0402
+0.05R
COMMON
VVVV28006S
C747
0.1UF
16V
10%
X7R
0402
COMMON
GND
XXXV28006S

3V3_PROT = 3.3V @ 350mA

MICRO-STAR INT'L CO.,LTD
MS-V280

Size	Document Description	Rev
Custom	01_Table of Contents	1.0

Date: Tuesday, August 14, 2012 | Sheet 18 of 25

MSI CONFIDENTIAL
00017967 Jonepei.(裴亮樂)
RD(C)2013030601
吳積源(00011601) RMA工程課

Power Supply II: PEX_VDD

GK107 PEX_VDD OPTION

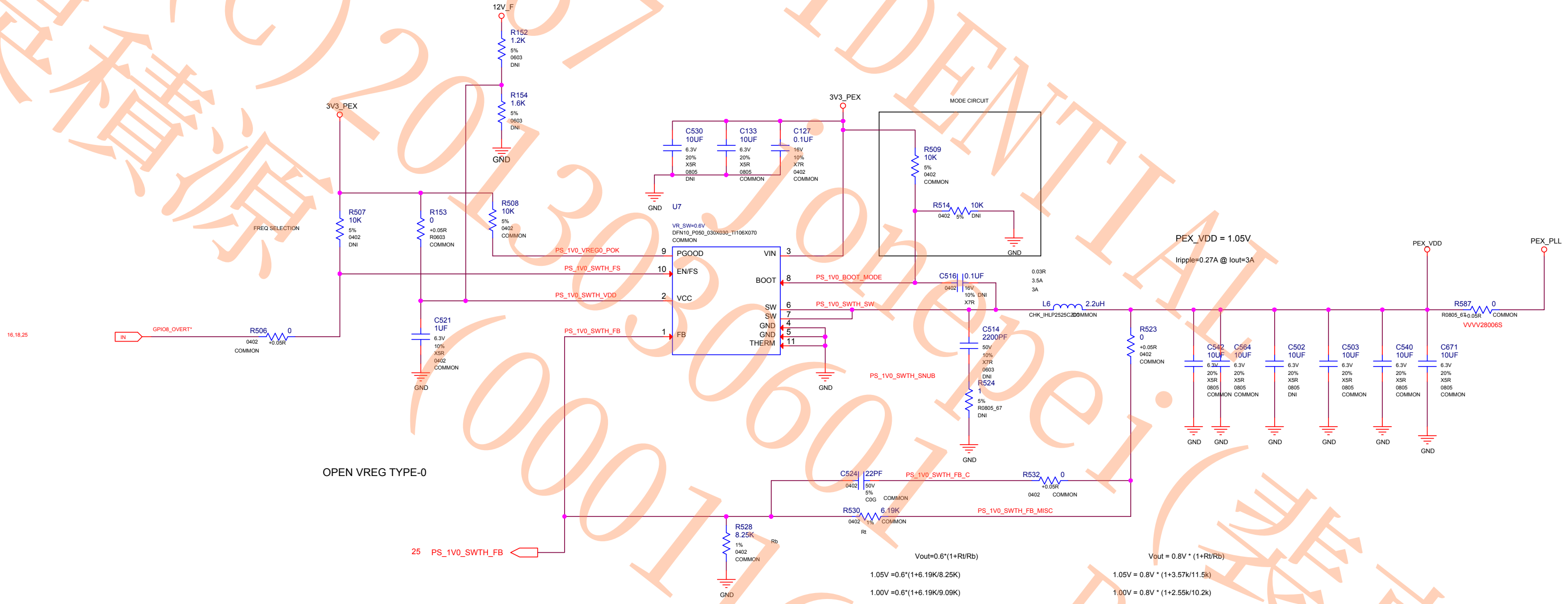
12V_F
R152
1.2K
5%
0603
DNI
R154
1.6K
5%
0603
DNI
GND
3V3_PEX
C530
10UF
6.3V
20%
X5R
0805
DNI
C133
10UF
6.3V
20%
X5R
0805
COMMON
C127
0.1UF
16V
10%
X7R
0402
COMMON
3V3_PEX
MODE CIRCUIT
R509
10K
5%
0402
COMMON
R514
10K
0402
DNI
GND
GND
U7
VR_SW=0.6V
DFN10_P050_030X030_T1106X070
COMMON
FREQ SELECTION
R507
10K
5%
0402
DNI
R153
0
+0.05R
R0603
COMMON
R508
10K
5%
0402
COMMON
PS_1V0_VREG0_POK
9
PGOOD
VIN
3
PS_1V0_SWTH_FS
10
EN/FS
BOOT
8
PS_1V0_BOOT_MODE
C516
0.1UF
0402
16V
10%
DNI
X7R
PS_1V0_SWTH_VDD
2
VCC
SW
SW
6
7
PS_1V0_SWTH_SW
GND
GND
THERM
4
5
11
PS_1V0_SWTH_FB
1
FB
0.03R
3.5A
3A
L6
2.2uH
CHK_IHLP2525CZ
COMMON
C514
2200PF
50V
10%
X7R
0603
DNI
R524
1
5%
R0805_67
DNI
GND
PS_1V0_SWTH_SNUB
PEX_VDD = 1.05V
Iripple=0.27A @ Iout=3A
PEX_VDD
PEX_PLL
R587
0
R0805_67
+0.05R
COMMON
VVVV28006S
R523
0
+0.05R
0402
COMMON
C542
10UF
6.3V
20%
X5R
0805
COMMON
C564
10UF
6.3V
20%
X5R
0805
COMMON
C502
10UF
6.3V
20%
X5R
0805
DNI
C503
10UF
6.3V
20%
X5R
0805
COMMON
C540
10UF
6.3V
20%
X5R
0805
COMMON
C671
10UF
6.3V
20%
X5R
0805
COMMON
GND
16,18,25
IN
GPIO8_OVERT*
R506
0
0402
+0.05R
COMMON
C521
1UF
6.3V
10%
X5R
0402
COMMON
GND
GND
C524
22PF
0402
50V
5%
C0G
COMMON
PS_1V0_SWTH_FB_C
R532
0
+0.05R
0402
COMMON
R530
6.19K
0402
1%
COMMON
Rt
PS_1V0_SWTH_FB_MISC
R528
8.25K
1%
0402
COMMON
Rb
GND
25
PS_1V0_SWTH_FB
OPEN VREG TYPE-0

Vout=0.6*(1+Rt/Rb)

1.05V =0.6*(1+6.19K/8.25K)

1.00V =0.6*(1+6.19K/9.09K)

Vout = 0.8V * (1+Rt/Rb)

1.05V = 0.8V * (1+3.57k/11.5k)

1.00V = 0.8V * (1+2.55k/10.2k)

MICRO-STAR INT'L CO.,LTD

MS-V280

Size	Document Description	Rev
Custom	01_Table of Contents	1.0

Date: Tuesday, August 14, 2012 | Sheet 19 of 25

MSI CONFIDENTIAL
0001796
RD(C)2013050601 Johnbei(裴亮樂)
吳積源(00011601) RMA工程課

FBVDDQ

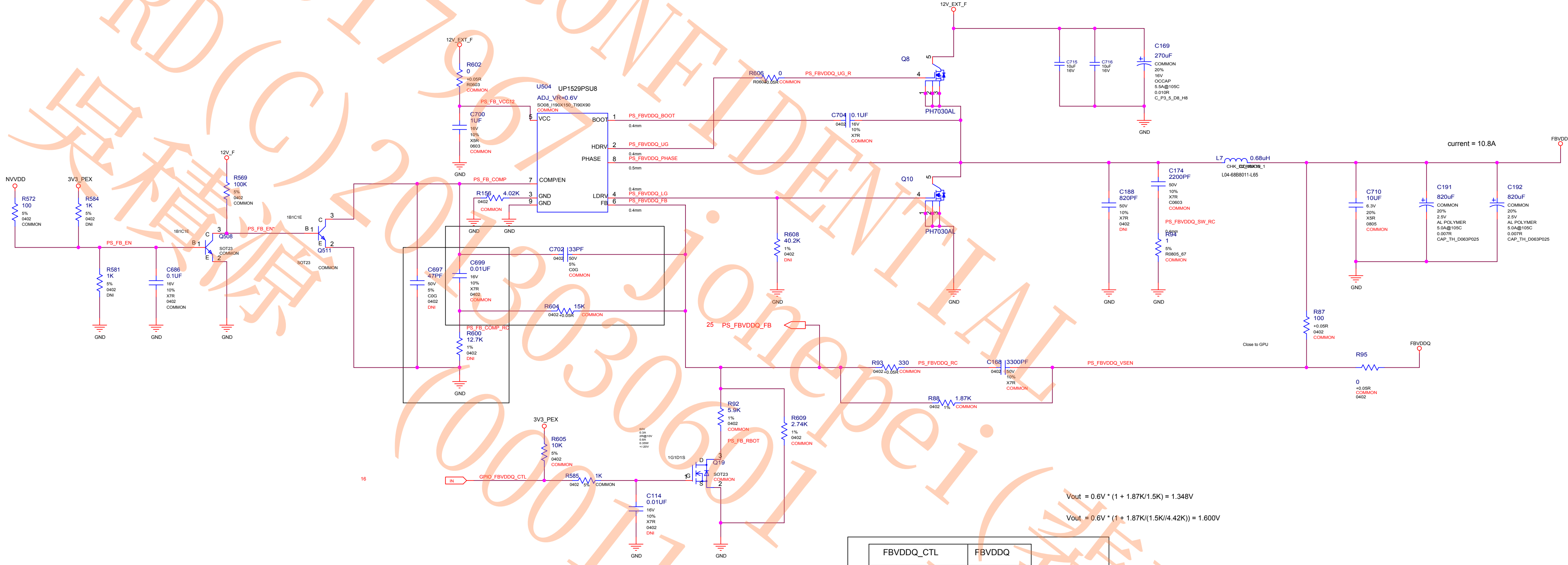
12V_EXT_F
R602
0
+0.05R
R0603
COMMON
PS_FB_VCC12
C700
1UF
16V
10%
X5R
0603
COMMON
U504
UP1529PSU8
ADJ_VR=0.6V
SOD8_I190X150_TI90X90
COMMON
VCC
BOOT
HDRV
PHASE
COMP/EN
GND
LDRV
FB
PS_FBVDDQ_BOOT
PS_FBVDDQ_UG
PS_FBVDDQ_PHASE
PS_FBVDDQ_LG
PS_FBVDDQ_FB
0.4mm
0.5mm
PS_FB_COMP
R156
4.02K
0402
COMMON
R606
0
PS_FBVDDQ_UG_R
Q8
PH7030AL
Q10
PH7030AL
C704
0.1UF
16V
10%
X7R
COMMON
C715
10uF
16V
C716
10uF
16V
C169
270uF
COMMON
20%
16V
OCCAP
5.5A@105C
0.010R
C_P3_5_D8_H8
GND
L7
0.68uH
CHK_D7_H4X9_1
L04-6B8011-L65
current = 10.8A
FBVDDQ
C174
2200PF
50V
10%
X7R
C0603
COMMON
PS_FBVDDQ_SW_RC
R94
1
5%
R0805_67
COMMON
C188
820PF
50V
10%
X7R
0402
DNI
R608
40.2K
1%
0402
DNI
C710
10UF
6.3V
20%
X5R
0805
COMMON
C191
820uF
COMMON
20%
2.5V
AL POLYMER
5.0A@105C
0.007R
CAP_TH_D063P025
C192
820uF
COMMON
20%
2.5V
AL POLYMER
5.0A@105C
0.007R
CAP_TH_D063P025
R87
100
+0.05R
0402
COMMON
Close to GPU
R95
0
+0.05R
COMMON
0402
NVVDD
3V3_PEX
12V_F
R572
100
5%
0402
COMMON
R584
1K
5%
0402
DNI
R569
100K
5%
0402
COMMON
PS_FB_EN
PS_FB_EN'
Q508
Q511
1B1C1E
SOT23
COMMON
R581
1K
5%
0402
DNI
C686
0.1UF
16V
10%
X7R
0402
COMMON
C697
47PF
50V
5%
C0G
0402
DNI
C699
0.01UF
16V
10%
X7R
0402
COMMON
C702
33PF
50V
5%
C0G
COMMON
R604
15K
COMMON
PS_FB_COMP_RC
R600
12.7K
1%
0402
DNI
25 PS_FBVDDQ_FB
R93
330
PS_FBVDDQ_RC
C168
3300PF
50V
10%
X7R
COMMON
PS_FBVDDQ_VSEN
R88
1.87K
1%
COMMON
R92
5.9K
1%
0402
COMMON
PS_FB_RBOT
R609
2.74K
1%
0402
COMMON
3V3_PEX
R605
10K
5%
0402
COMMON
16
IN
GPIO_FBVDDQ_CTL
R585
1K
0402
5%
COMMON
C114
0.01UF
16V
10%
X7R
0402
DNI
1G1D1S
Q19
SOT23
COMMON
GND

Vout = 0.6V * (1 + 1.87K/1.5K) = 1.348V

Vout = 0.6V * (1 + 1.87K/(1.5K//4.42K)) = 1.600V

FBVDDQ_CTL	FBVDDQ	
0	1.35V	
1	1.5V	<= DEFAULT

MICRO-STAR INT'L CO.,LTD

MS-V280

Size: Custom
Document Description: 01_Table of Contents
Rev: 1.0
Date: Tuesday, August 14, 2012
Sheet 20 of 25

MSI 00017967 CONFIDENTIAL Jonepei (蔡亮樂) RD(C)吳積源 201303060 (00011601) RMA工程課

PS: NVVDD Controller, VID

VID Table

GPIO4 VID_5	GPIO3 VID_4	GPIO2 VID_3	GPIO1 VID_2	GPIO0 VID_1	VOUT
0	0	0	0	0	1.2125V
0	0	0	0	1	1.2000V
0	0	0	1	0	1.1875V
0	0	0	1	1	1.1750V
0	0	1	0	0	1.1625V
0	0	1	0	1	1.1500V
0	0	1	1	0	1.1375V
0	0	1	1	1	1.1250V
0	1	0	0	0	1.1125V
0	1	0	0	1	1.1000V
0	1	0	1	0	1.0875V
0	1	0	1	1	1.0750V
0	1	1	0	0	1.0625V
0	1	1	0	1	1.0500V
0	1	1	1	0	1.0375V
0	1	1	1	1	1.0250V
1	0	0	0	0	1.0125V
1	0	0	0	1	1.0000V
1	0	0	1	0	0.9875V
1	0	0	1	1	0.9750V
1	0	1	0	0	0.9625V
1	0	1	0	1	0.9500V
1	0	1	1	0	0.9375V
1	0	1	1	1	0.9250V
1	1	0	0	0	0.9125V
1	1	0	0	1	0.9000V
1	1	0	1	0	0.8875V
1	1	0	1	1	0.8750V
1	1	1	0	0	0.8625V
1	1	1	0	1	0.8500V
1	1	1	1	0	0.8375V
1	1	1	1	1	0.8250V

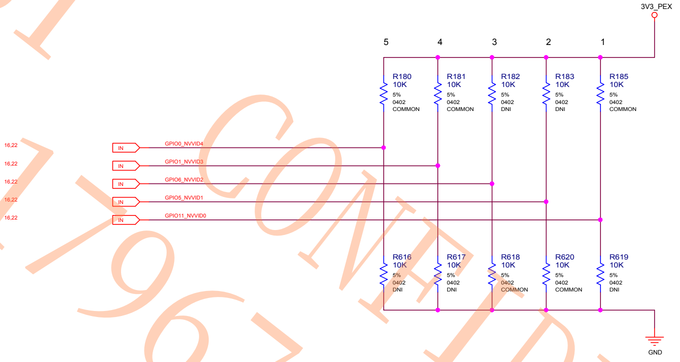
3V3_PEX
5
4
3
2
1
R180
10K
5%
0402
COMMON
R181
10K
5%
0402
COMMON
R182
10K
5%
0402
DNI
R183
10K
5%
0402
DNI
R185
10K
5%
0402
COMMON
16,22
IN
GPIO0_NVVID4
16,22
IN
GPIO1_NVVID3
16,22
IN
GPIO6_NVVID2
16,22
IN
GPIO5_NVVID1
16,22
IN
GPIO11_NVVID0
R616
10K
5%
0402
DNI
R617
10K
5%
0402
DNI
R618
10K
5%
0402
COMMON
R620
10K
5%
0402
COMMON
R619
10K
5%
0402
DNI
GND

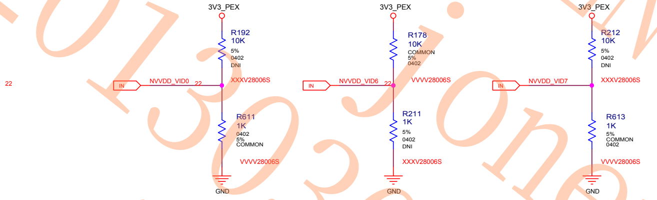
22
3V3_PEX
R192
10K
5%
0402
DNI
IN
NVVDD_VID0
22
XXXV28006S
R611
1K
0402
5%
COMMON
VVVV28006S
GND
3V3_PEX
R178
10K
COMMON
5%
0402
IN
NVVDD_VID6
22
VVVV28006S
R211
1K
5%
0402
DNI
XXXV28006S
GND
3V3_PEX
R212
10K
5%
0402
DNI
IN
NVVDD_VID7
XXXV28006S
R613
1K
5%
COMMON
0402
VVVV28006S
GND

PEX Input - Power Level/PSI* Control

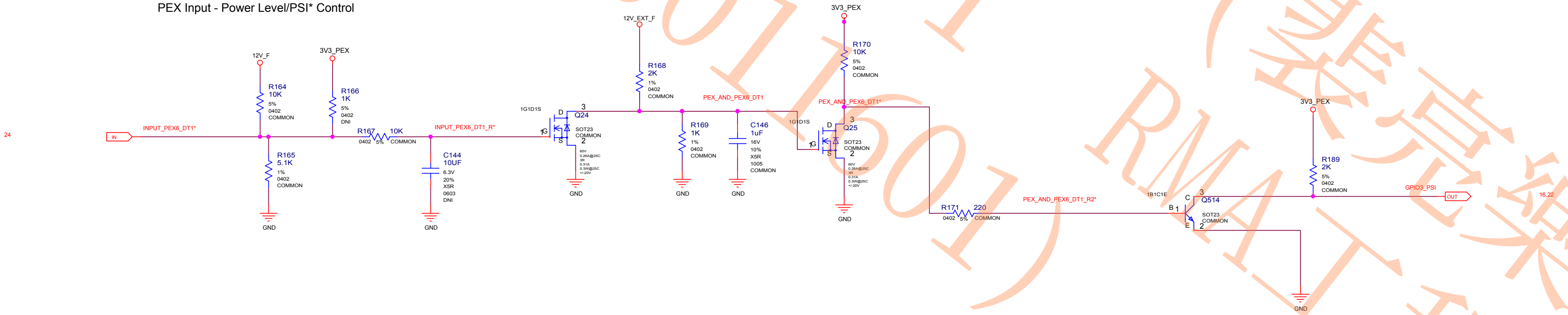
24
IN
INPUT_PEX6_DT1*
12V_F
R164
10K
5%
0402
COMMON
R165
5.1K
1%
0402
COMMON
GND
3V3_PEX
R166
1K
5%
0402
DNI
R167
10K
0402
5%
COMMON
INPUT_PEX6_DT1_R*
C144
10UF
6.3V
20%
X5R
0603
DNI
GND
1G1D1S
D
Q24
3
1G
S
2
SOT23
COMMON
60V
0.26A@25C
3R
0.31A
0.3W@25C
+/-20V
GND
12V_EXT_F
R168
2K
1%
0402
COMMON
PEX_AND_PEX6_DT1
R169
1K
1%
0402
COMMON
GND
C146
1uF
16V
10%
X5R
1005
COMMON
GND
3V3_PEX
R170
10K
5%
0402
COMMON
PEX_AND_PEX6_DT1*
1G1D1S
D
Q25
3
1G
S
2
SOT23
COMMON
60V
0.26A@25C
3R
0.31A
0.3W@25C
+/-20V
GND
R171
220
0402
5%
COMMON
PEX_AND_PEX6_DT1_R2*
1B1C1E
B
1
C
3
Q514
E
2
SOT23
COMMON
GND
3V3_PEX
R189
2K
5%
0402
COMMON
GPIO3_PSI
OUT
16,22

MICRO-STAR INT'L CO.,LTD

MS-V280

Size	Document Description	Rev
Custom	01_Table of Contents	1.0

Date: Tuesday, August 14, 2012 Sheet 21 of 25

MSI CONFIDENTIAL
00017967 RD(C) [illegible]
20130601 jonepei(裴亮樂)
(00017601) RMA工程課

NVVDD CTRL

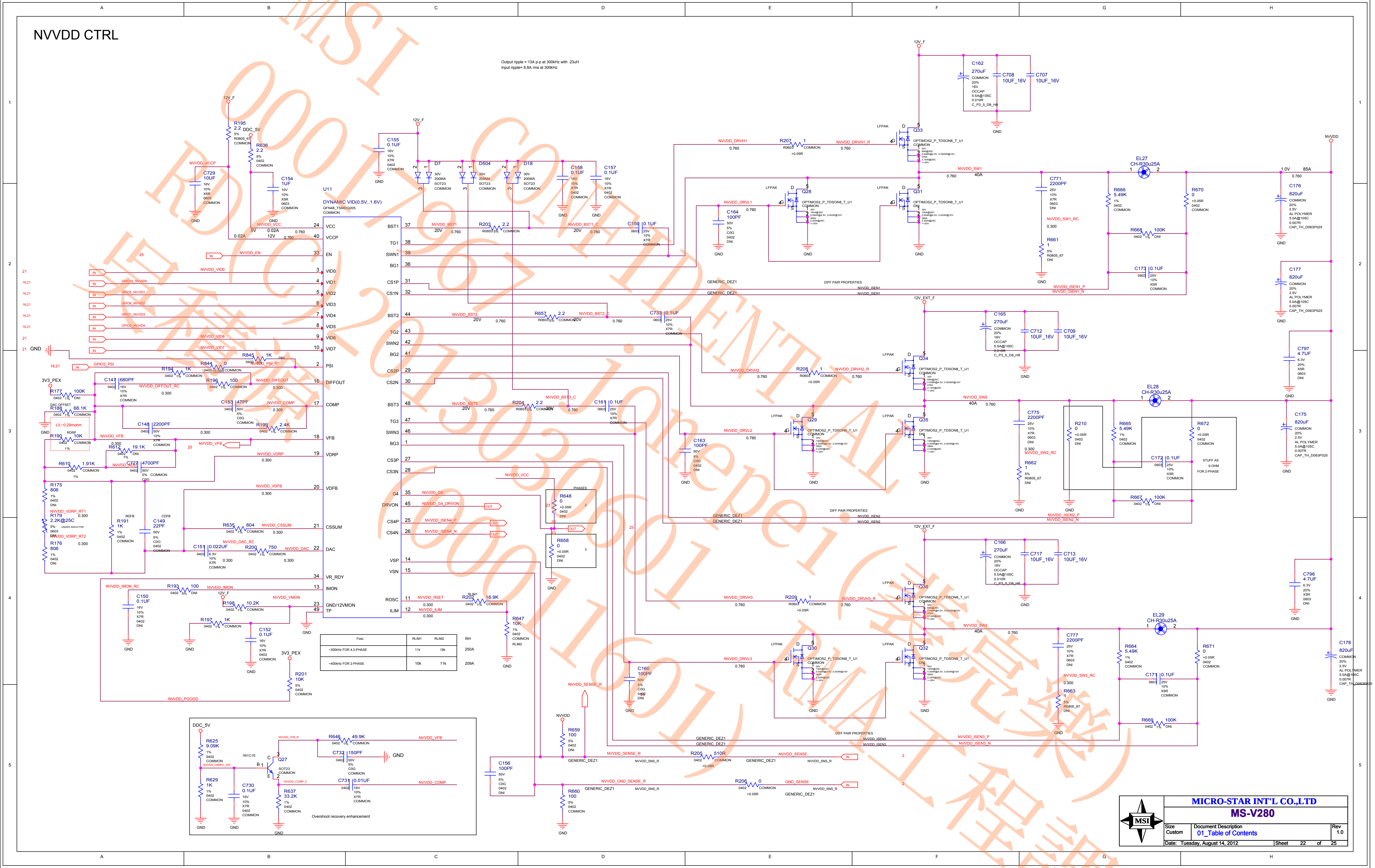

U11
DYNAMIC VID(0.5V..1.6V)
QFN48_TSMDQ205
COMMON
VCC 24
VCCP 40
EN 33
VID0 3
VID1 4
VID2 5
VID3 6
VID4 7
VID5 8
VID6 9
VID7 10
PSI 2
DIFFOUT 16
COMP 17
VFB 18
VDRP 19
VDFB 20
CSSUM 21
DAC 22
VR_RDY 34
IMON 13
GND/12VMON 23
TP 49
BST1 37
TG1 38
SWN1 39
BG1 36
CS1P 31
CS1N 32
BST2 44
TG2 43
SWN2 42
BG2 41
CS2P 29
CS2N 30
BST3 48
TG3 47
SWN3 46
BG3 1
CS3P 27
CS3N 28
G4 35
DRVON 45
CS4P 25
CS4N 26
VSP 14
VSN 15
ROSC 11
ILIM 12
12V_F
R195 2.2 5% R0805_67 COMMON
DDC_5V
R636 2.2 5% 0402 COMMON
NVVDD_VCCP
C729 10UF 16V 10% X5R 0805 COMMON
C154 1UF 10V 10% X5R 0603 COMMON
NVVDD_VCC
0.02A 5V 0.02A 12V 0.760
C155 0.1UF 16V 10% X7R 0402 COMMON
D7 30V 200MA SOT23 COMMON
D504 30V 200MA SOT23 COMMON
D18 30V 200MA SOT23 COMMON
C158 0.1UF 16V 10% X7R 0402 COMMON
C157 0.1UF 16V 10% X7R 0402 COMMON
NVVDD_BST1 20V 0.760
R203 2.2 R0603 5% COMMON
NVVDD_BST1_C
C159 0.1UF 0603 25V 10% X7R COMMON
NVVDD_EN
NVVDD_VID0
GPIO11_NVVID0
GPIO5_NVVID1
GPIO6_NVVID2
GPIO1_NVVID3
GPIO0_NVVID4
NVVDD_VID6
NVVDD_VID7
GPIO3_PSI
R845 1K 0402 5% DNI
R844 0 0402 +0.05R COMMON
NVVDD_PSI_R
R194 1K 0402 1% COMMON
3V3_PEX
R177 100K 0402 1% DNI
C147 680PF 0402 16V 10% X7R COMMON
NVVDD_DIFFOUT_RC 0.300
R196 100 0402 1% COMMON
NVVDD_DIFFOUT 0.300
DAC OFFSET
R188 68.1K 0402 1% COMMON
C153 47PF 0402 50V 5% C0G COMMON
NVVDD_COMP 0.300
L/L~0.29mohm
RDRP
R190 10K 0402 COMMON 1%
C148 2200PF 0402 50V 10% X7R COMMON
R199 2.4K 0402 1% COMMON
NVVDD_VFB
R612 19.1K 0402 1% DNI
R610 1.91K 0402 COMMON 1%
NVVDD_ACLL
C727 4700PF 0402 50V 5% COMMON C0G
NVVDD_VDRP 0.300
R175 806 1% 0402 DNI
NVVDD_VDRP_RT1 0.300
R179 2.2K@25C 5% 0603 DNI UNDER INDUCTOR
NVVDD_VDRP_RT2
R176 806 1% 0402 DNI 0.300
RDFB
R191 1K 1% 0402 COMMON
CDFB
C149 22PF 50V 5% C0G 0402 COMMON
NVVDD_VDFB 0.300
R635 604 0402 1% COMMON
NVVDD_CSSUM 0.300
C151 0.022UF 0402 6.3V 10% X7R COMMON 0.300
NVVDD_DAC_RC
R200 750 0402 1% COMMON
NVVDD_DAC 0.300
NVVDD_IMON_RC
R193 100 0402 5% DNI
NVVDD_IMON
C150 0.1UF 16V 10% X7R 0402 DNI
R198 10.2K 0402 1% COMMON
NVVDD_VMON
R197 1K 0402 1% COMMON
C152 0.1UF 16V 10% X7R 0402 COMMON
R201 10K 5% 0402 COMMON
NVVDD_PGOOD
NVVDD_G4
NVVDD_G4_DRVON
NVVDD_ISEN4_P
NVVDD_ISEN4_N
PHASES
R648 0 +0.05R 0402 DNI
R658 0 +0.05R 0402 DNI
NVVDD_RSET 0.300
RLIM1
R202 16.9K 0402 1% COMMON
NVVDD_ILIM 0.300
R647 10K 1% 0402 COMMON RLIM2
NVVDD_DRVH1 0.760
R207 1 R0603 COMMON +0.05R
NVVDD_DRVH1_R 0.760
LFPAK
Q33 OPTIMOS2_P_TDSON8_T_U1 COMMON
30V 69A@25C 0.008R@4.5V, 0.0055R@10V 276A 2.14W@25C +/-20V
C162 270uF COMMON 20% 16V OCCAP 5.5A@105C 0.010R C_P3_5_D8_H8
C708 10UF_16V
C707 10UF_16V
NVVDD_DRVL1 0.760
C164 100PF 50V 5% C0G 0402 DNI
Q28 OPTIMOS2_P_TDSON8_T_U1 COMMON
Q31 OPTIMOS2_P_TDSON8_T_U1 DNI
30V 120A@25C 0.004R@4.5V, 0.003R@10V 360A 2.22W@25C +/-20V
NVVDD_SW1 0.760 40A
C771 2200PF 25V 10% X7R 0603 DNI
NVVDD_SW1_RC 0.300
R661 1 5% R0805_67 DNI
EL27 CH-R30u25A
R666 5.49K 1% 0402 COMMON
R670 0 +0.05R 0402 COMMON
R668 100K 0402 1% DNI
C173 0.1UF 0603 25V 10% X5R COMMON
NVVDD_ISEN1_P
NVVDD_ISEN1_N
GENERIC_DEZ1
DIFF PAIR PROPERTIES
NVVDD_ISEN1
NVVDD
1.0V 85A 0.760
C176 820uF COMMON 20% 2.5V AL POLYMER 5.0A@105C 0.007R CAP_TH_D063P025
C177 820uF COMMON 20% 2.5V AL POLYMER 5.0A@105C 0.007R CAP_TH_D063P025
12V_EXT_F
NVVDD_BST2 20V 0.760
R657 2.2 R0603 5% COMMON
NVVDD_BST2_C
C733 0.1UF 0603 25V 10% X7R COMMON
C165 270uF COMMON 20% 16V OCCAP 5.5A@105C 0.010R C_P3_5_D8_H8
C712 10UF_16V
C709 10UF_16V
NVVDD_DRVH2 0.760
R208 1 R0603 COMMON +0.05R
NVVDD_DRVH2_R 0.760
Q34 OPTIMOS2_P_TDSON8_T_U1 COMMON
C797 4.7UF 6.3V 20% X5R 0603 DNI
NVVDD_SW2 40A 0.760
EL28 CH-R30u25A
NVVDD_BST3 20V 0.760
R204 2.2 R0603 5% COMMON
NVVDD_BST3_C
C161 0.1UF 0603 25V 10% X7R COMMON
NVVDD_DRVL2 0.760
C163 100PF 50V 5% C0G 0402 DNI
Q29 OPTIMOS2_P_TDSON8_T_U1 COMMON
Q35 OPTIMOS2_P_TDSON8_T_U1 DNI
C775 2200PF 25V 10% X7R 0603 DNI
NVVDD_SW2_RC 0.300
R662 1 5% R0805_67 DNI
R210 0 +0.05R 0402 DNI
R665 5.49K 1% 0402 COMMON
R672 0 +0.05R 0402 COMMON
C172 0.1UF 0603 25V 10% X5R COMMON
STUFF AS 0-OHM FOR 2-PHASE
R667 100K 0402 1% DNI
NVVDD_ISEN2_P
NVVDD_ISEN2_N
NVVDD_ISEN2
C175 820uF COMMON 20% 2.5V AL POLYMER 5.0A@105C 0.007R CAP_TH_D063P025
C166 270uF COMMON 20% 16V OCCAP 5.5A@105C 0.010R C_P3_5_D8_H8
C717 10UF_16V
C713 10UF_16V
NVVDD_DRVH3 0.760
R209 1 R0603 COMMON +0.05R
NVVDD_DRVH3_R 0.760
Q36 OPTIMOS2_P_TDSON8_T_U1 COMMON
C796 4.7UF 6.3V 20% X5R 0603 DNI
NVVDD_SW3 40A 0.760
EL29 CH-R30u25A
NVVDD_DRVL3 0.760
C160 100PF 50V 5% C0G 0402 DNI
Q30 OPTIMOS2_P_TDSON8_T_U1 COMMON
Q32 OPTIMOS2_P_TDSON8_T_U1 DNI
C777 2200PF 25V 10% X7R 0603 DNI
NVVDD_SW3_RC 0.300
R663 1 5% R0805_67 DNI
R664 5.49K 1% 0402 COMMON
R671 0 +0.05R 0402 COMMON
C171 0.1UF 0603 25V 10% X5R COMMON
R669 100K 0402 1% DNI
NVVDD_ISEN3_P
NVVDD_ISEN3_N
NVVDD_ISEN3
C178 820uF COMMON 20% 2.5V AL POLYMER 5.0A@105C 0.007R CAP_TH_D063P025
NVVDD_SENSE_R
R659 100 5% 0402 DNI
C156 100PF 50V 5% C0G 0402 DNI
R205 510R 0402 COMMON +0.05R
NVVDD_SENSE
NVVDD_SNS_R
NVVDD_GND_SENSE_R
R660 100 5% 0402 COMMON
R206 0 0402 COMMON +0.05R
GND_SENSE
DDC_5V
R625 9.09K 1% 0402 COMMON
NVVDD_OSREC_DIV
R629 1K 1% 0402 COMMON
C730 0.1UF 16V 10% X7R 0402 COMMON
1B1C1E
Q27 SOT23 COMMON
NVVDD_VFB_R
R646 49.9K 0402 1% COMMON
C732 150PF 0402 50V 5% C0G COMMON
NVVDD_COMP_C
C731 0.01UF 0402 16V 10% X7R COMMON
R637 33.2K 1% 0402 COMMON
IN
OUT
GND

Output ripple = 13A p-p at 300kHz with .23uH
Input ripple= 8.8A rms at 300kHz

Fosc	RLIM1	RLIM2	Ilim
~300kHz FOR 4,3-PHASE	11k	18k	250A
~400kHz FOR 2-PHASE	10k	11k	209A

Overshoot recovery enhancement

MICRO-STAR INT'L CO.,LTD

MS-V280

Size	Document Description	Rev
Custom	01_Table of Contents	1.0

Date: Tuesday, August 14, 2012 Sheet 22 of 25

MSI 000179617 CONFIDENTIAL RD(C) 20130601 Jonepei (00001601) RMA工程課

NVVDD Phase 4

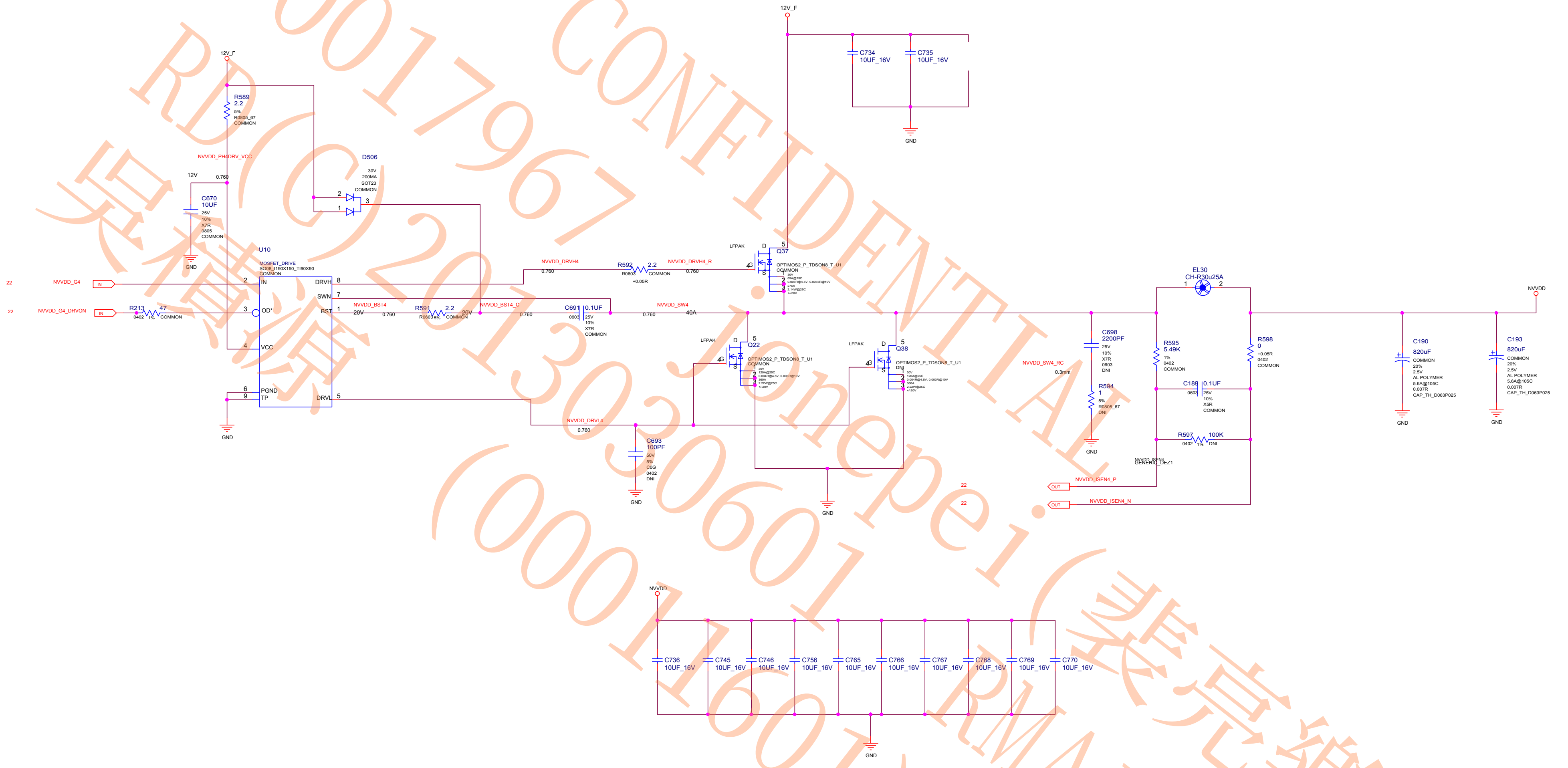
12V_F
R589
2.2
5%
R0805_67
COMMON
NVVDD_PH4DRV_VCC
12V
0.760
C670
10UF
25V
10%
X7R
0805
COMMON
GND
D506
30V
200MA
SOT23
COMMON
U10
MOSFET_DRIVE
SO08_I190X150_TI90X90
COMMON
22
NVVDD_G4
IN
NVVDD_G4_DRVON
R213
47
0402
1%
COMMON
IN
OD*
VCC
PGND
TP
DRVH
SWN
BST
DRVL
NVVDD_BST4
20V
0.760
R591
2.2
R0603
COMMON
NVVDD_BST4_C
C691
0.1UF
0603
25V
10%
X7R
COMMON
NVVDD_DRVH4
R592
2.2
R0603
COMMON
+0.05R
NVVDD_DRVH4_R
NVVDD_SW4
40A
12V_F
C734
10UF_16V
C735
10UF_16V
GND
LFPAK
Q37
OPTIMOS2_P_TDSON8_T_U1
COMMON
Q22
OPTIMOS2_P_TDSON8_T_U1
COMMON
Q38
OPTIMOS2_P_TDSON8_T_U1
DNI
NVVDD_DRVL4
0.760
C693
100PF
50V
5%
C0G
0402
DNI
GND
C698
2200PF
25V
10%
X7R
0603
DNI
NVVDD_SW4_RC
0.3mm
R594
1
5%
R0805_67
DNI
EL30
CH-R30u25A
R595
5.49K
1%
0402
COMMON
R598
0
+0.05R
0402
COMMON
C189
0.1UF
0603
25V
10%
X5R
COMMON
R597
100K
0402
1%
DNI
GENERIC_DEZ1
OUT
NVVDD_ISEN4_P
OUT
NVVDD_ISEN4_N
NVVDD
C190
820uF
COMMON
20%
2.5V
AL POLYMER
5.6A@105C
0.007R
CAP_TH_D063P025
C193
820uF
COMMON
20%
2.5V
AL POLYMER
5.6A@105C
0.007R
CAP_TH_D063P025
NVVDD
C736
10UF_16V
C745
10UF_16V
C746
10UF_16V
C756
10UF_16V
C765
10UF_16V
C766
10UF_16V
C767
10UF_16V
C768
10UF_16V
C769
10UF_16V
C770
10UF_16V
GND

MSI 00017967 CONFIDENTIAL
RD(G) 20130601 Jonepei (裴亮樂)
吳權源 (00011601) RMA工程課

MICRO-STAR INT'L CO.,LTD

MS-V280

Size	Document Description	Rev
Custom	01_Table of Contents	1.0

Date: Tuesday, August 14, 2012 Sheet 23 of 25

12V EXT / 12V PEX Power Select Circuit

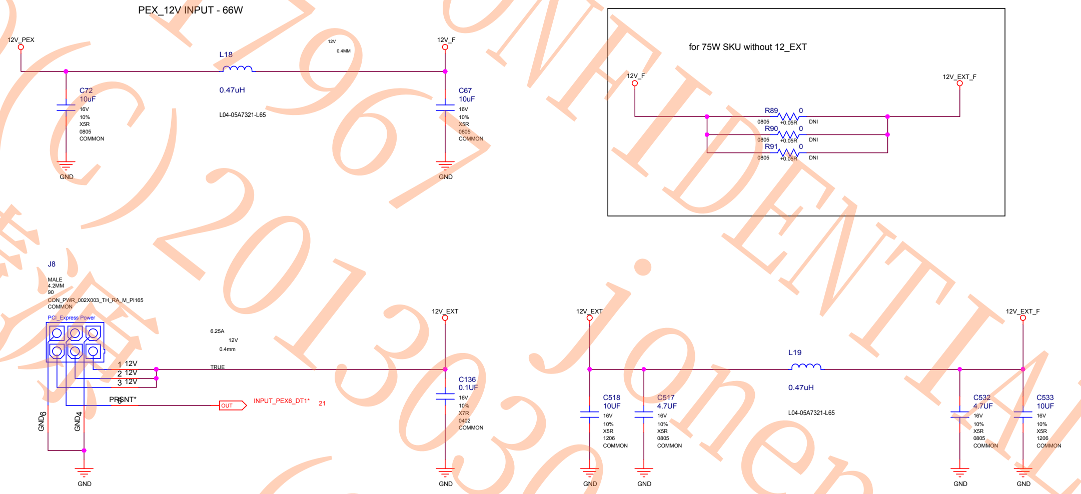
PEX_12V INPUT - 66W
12V_PEX
L18
0.47uH
L04-05A7321-L65
12V
0.4MM
12V_F
C72
10uF
16V
10%
X5R
0805
COMMON
C67
10uF
16V
10%
X5R
0805
COMMON
GND
GND
for 75W SKU without 12_EXT
12V_F
12V_EXT_F
R89 0
0805 +0.05R DNI
R90 0
0805 +0.05R DNI
R91 0
0805 +0.05R DNI
J8
MALE
4.2MM
90
CON_PWR_002X003_TH_RA_M_PI165
COMMON
PCI_Express Power
1 12V
2 12V
3 12V
5
PRSNT*
GND6
GND4
6.25A
12V
0.4mm
TRUE
OUT
INPUT_PEX6_DT1*
21
12V_EXT
C136
0.1UF
16V
10%
X7R
0402
COMMON
GND
GND
12V_EXT
L19
0.47uH
L04-05A7321-L65
12V_EXT_F
C518
10UF
16V
10%
X5R
1206
COMMON
C517
4.7UF
16V
10%
X5R
0805
COMMON
C532
4.7UF
16V
10%
X5R
0805
COMMON
C533
10UF
16V
10%
X5R
1206
COMMON
GND
GND
GND
GND

MICRO-STAR INT'L CO.,LTD

MS-V280

Size: Custom
Document Description: 01_Table of Contents
Rev: 1.0
Date: Tuesday, August 14, 2012
Sheet 24 of 25

MSI CONFIDENTIAL
00017967
RD(C)2013030601 jonepei(裴亮樂)
吳積源(00011601) RMA工程課

PS: Shutdown & 6262

THERM OVERT SHUTDOWN LATCH

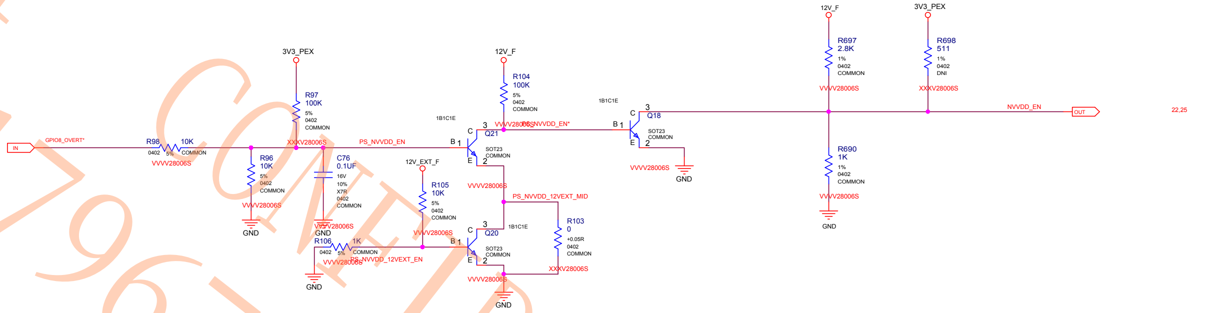
3V3_PEX
12V_F
12V_F
3V3_PEX
R697 2.8K 1% 0402 COMMON
R698 511 1% 0402 DNI
VVVV28006S
XXXV28006S
NVVDD_EN
OUT
22,25
R690 1K 1% 0402 COMMON
GND
Q18 SOT23 COMMON
1B1C1E
PS_NVVDD_EN*
R104 100K 5% 0402 COMMON
Q21 SOT23 COMMON
R97 100K 5% 0402 COMMON
GPIO8_OVERT*
IN
18,18,19
R98 10K 0402 5% COMMON
PS_NVVDD_EN
R96 10K 5% 0402 COMMON
C76 0.1UF 16V 10% X7R 0402 COMMON
12V_EXT_F
R105 10K 5% 0402 COMMON
PS_NVVDD_12VEXT_MID
R103 0 +0.05R 0402 COMMON
Q20 SOT23 COMMON
R106 1K 0402 5% COMMON
PS_NVVDD_12VEXT_EN
GND

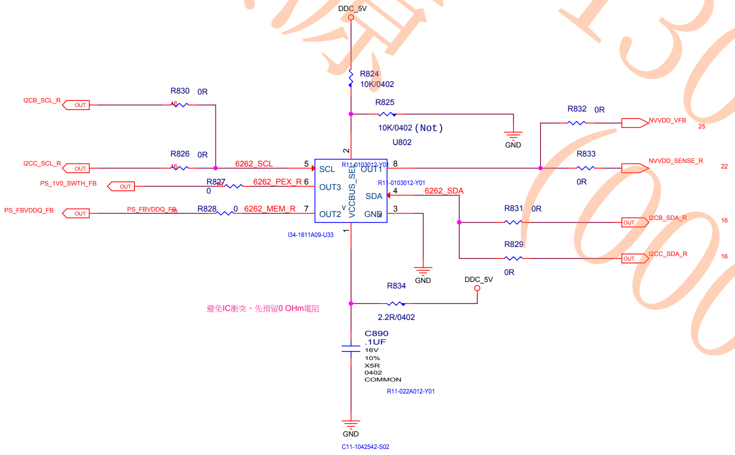
DDC_5V
R824 10K/0402
R825 10K/0402 (Not)
U802
I2CB_SCL_R
R830 0R
R826 0R
I2CC_SCL_R
6262_SCL
PS_1V0_SWTH_FB
R827 0
6262_PEX_R
PS_FBVDDQ_FB
R828 0
6262_MEM_R
SCL
OUT1
OUT3
SDA
OUT2
GND
VCCBUS_SE
R11-0103012-Y01
6262_SDA
R832 0R
NVVDD_VFB
25
R833 0R
NVVDD_SENSE_R
22
R831 0R
I2CB_SDA_R
16
R829 0R
I2CC_SDA_R
16
I34-1811A09-U33
R834 2.2R/0402
DDC_5V
避免IC衝突，先預留0 OHm電阻
C890 .1UF 16V 10% X5R 0402 COMMON
R11-022A012-Y01
GND
C11-1042542-S02

PEX Input - NVVDD Power Sequence

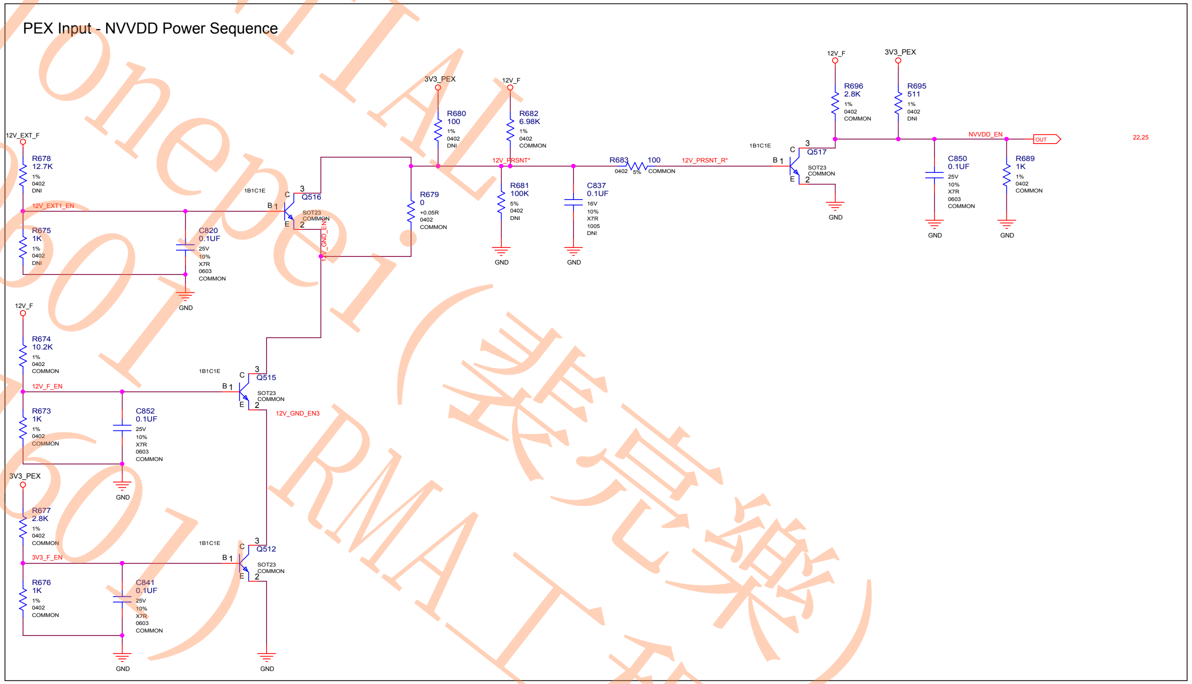
12V_EXT_F
R678 12.7K 1% 0402 DNI
12V_EXT1_EN
R675 1K 1% 0402 DNI
C820 0.1UF 25V 10% X7R 0603 COMMON
Q516 SOT23 COMMON
12V_GND_EN
3V3_PEX
R680 100 1% 0402 DNI
12V_F
R682 6.98K 1% 0402 COMMON
R679 0 +0.05R 0402 COMMON
12V_PRSNT*
R681 100K 5% 0402 DNI
C837 0.1UF 16V 10% X7R 1005 DNI
R683 100 0402 5% COMMON
12V_PRSNT_R*
Q517 SOT23 COMMON
12V_F
R696 2.8K 1% 0402 COMMON
3V3_PEX
R695 511 1% 0402 DNI
NVVDD_EN
OUT
22,25
C850 0.1UF 25V 10% X7R 0603 COMMON
R689 1K 1% 0402 COMMON
12V_F
R674 10.2K 1% 0402 COMMON
12V_F_EN
R673 1K 1% 0402 COMMON
C852 0.1UF 25V 10% X7R 0603 COMMON
Q515 SOT23 COMMON
12V_GND_EN3
3V3_PEX
R677 2.8K 1% 0402 COMMON
3V3_F_EN
R676 1K 1% 0402 COMMON
C841 0.1UF 25V 10% X7R 0603 COMMON
Q512 SOT23 COMMON
1B1C1E
GND

MICRO-STAR INT'L CO.,LTD

MS-V280

Size	Document Description	Rev
Custom	01_Table of Contents	1.0

Date: Tuesday, August 14, 2012 Sheet 25 of 25

MSI CONFIDENTIAL
00017967
RD(C)2013030601 Jonepei (裴亮樂)
00011601
吳積源
RMA工程課