P2010-A02

75W/100W GK107/GF108 128-BIT GDDR5 in x32/x16 MODE
DVI-I-DL + DVI-D-DL/HDMI +mHDMI/DP

CHiNAFIX

TABLE OF CONTENTS

Page	Description
1	Table of Contents
2	PCI Express
3	GPU Frame Buffer Partition A/B
4	FBA Partition [31..0]
5	FBA Partition [63..32]
6	FBB Partition [31..0]
7	FBB Partition [63..32]
8	GPU FB Decoupling
9	DACA VGA
10	IFPAB TMDS
11	IFPC mHDMI
12	IFPC DP
13	IFPEF TMDS
14	IFPE Long HDMI
15	Core Decoupling,GPU VDD_3V3
16	Misc Interfaces
17	Straps, Thermal, Mechanical
18	Power Supply I: Misc Power
19	Power supply II:PEX_VDD
20	FBVDDQ
21	NVVDD CTRL
22	NVVDD MOS
23	12V EXT / 12V PEX Power Select Circuit

2012/07/05 MS-V280-1.0 changed list

Page	Description
12	Remove colay DP (J1)
14	Remove colay HDMI (J5)
17	Remove 2pin fan control,add 4pin fan control X2,remove all bumper
18	Romove U501 PEX_VDD / U503 PEX_PLL / U3
21	Change FBVDDQ PWM to UP1529
21	Add PSI control circuit
22	Change PWM to 4-phase (ON Semiconductor/NCP5395GMNR2G)
25	Add 6262 voltage control circuit,thermal shutdown circuit and NVVDD power sequence

MSI CONFIDENTIAL
00017967 RD(C) 2013030601 Jonepei(裴亮樂) RMA工程課
吳檢源(00011601)

MICRO-STAR INT'L CO.,LTD		
MS-V280		
Size Custom	Document Description 01_Table of Contents	Rev 1.0
Date: Tuesday, August 14, 2012	Sheet 1 of 25	

PCI Express

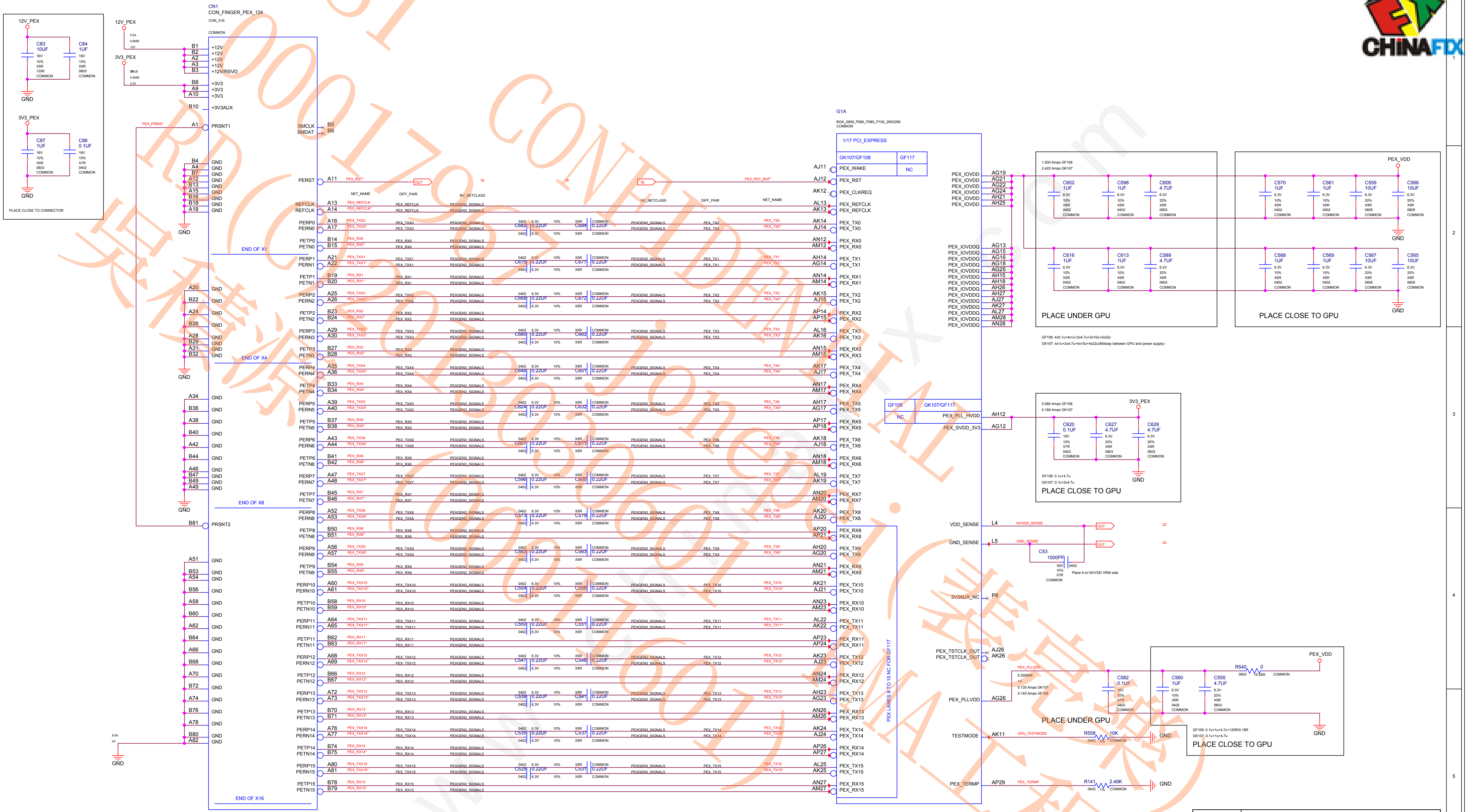

12V_PEX
C83 10UF 16V 10% X5R 1206 COMMON
C84 1UF 16V 10% X5R 0603 COMMON
GND
3V3_PEX
C87 1UF 16V 10% X5R 0603 COMMON
C86 0.1UF 16V 10% X7R 0402 COMMON
GND
PLACE CLOSE TO CONNECTOR
12V_PEX
5.5A
0.6MM
12V
3V3_PEX
3A
0.4MM
3.3V
CN1
CON_FINGER_PEX_124
CON_X16
COMMON
B1 B2 A2 A3 +12V
B3 +12V/RSVD
B8 A9 A10 +3V3
B10 +3V3AUX
PEX_PRSNT
A1 PRSNT1
SMCLK B5
SMDAT B6
B4 A4 B7 A12 B13 A15 B16 B18 A18 GND
GND
PERST A11 PEX_RST* OUT 18
NET_NAME
DIFF_PAIR
NV_NETCLASS
REFCLK A13 PEX_REFCLK PEX_REFCLK PEXGEN3_SIGNALS
REFCLK A14 PEX_REFCLK* PEX_REFCLK PEXGEN3_SIGNALS
PERP0 A16 PEX_TXX0 / PERN0 A17 PEX_TXX0*
PETP0 B14 PEX_RX0 / PETN0 B15 PEX_RX0*
END OF X1
PERP1 A21 PEX_TXX1 / PERN1 A22 PEX_TXX1*
PETP1 B19 PEX_RX1 / PETN1 B20 PEX_RX1*
PERP2 A25 PEX_TXX2 / PERN2 A26 PEX_TXX2*
PETP2 B23 PEX_RX2 / PETN2 B24 PEX_RX2*
PERP3 A29 PEX_TXX3 / PERN3 A30 PEX_TXX3*
PETP3 B27 PEX_RX3 / PETN3 B28 PEX_RX3*
END OF X4
A20 B22 A24 B26 A28 B29 A31 B32 GND
PERP4 A35 PEX_TXX4 / PERN4 A36 PEX_TXX4*
PETP4 B33 PEX_RX4 / PETN4 B34 PEX_RX4*
PERP5 A39 PEX_TXX5 / PERN5 A40 PEX_TXX5*
PETP5 B37 PEX_RX5 / PETN5 B38 PEX_RX5*
PERP6 A43 PEX_TXX6 / PERN6 A44 PEX_TXX6*
PETP6 B41 PEX_RX6 / PETN6 B42 PEX_RX6*
PERP7 A47 PEX_TXX7 / PERN7 A48 PEX_TXX7*
PETP7 B45 PEX_RX7 / PETN7 B46 PEX_RX7*
END OF X8
A34 B36 A38 B40 A42 B44 A46 B47 B49 A49 GND
B81 PRSNT2
PERP8 A52 PEX_TXX8 / PERN8 A53 PEX_TXX8*
PETP8 B50 PEX_RX8 / PETN8 B51 PEX_RX8*
PERP9 A56 PEX_TXX9 / PERN9 A57 PEX_TXX9*
PETP9 B54 PEX_RX9 / PETN9 B55 PEX_RX9*
PERP10 A60 PEX_TXX10 / PERN10 A61 PEX_TXX10*
PETP10 B58 PEX_RX10 / PETN10 B59 PEX_RX10*
PERP11 A64 PEX_TXX11 / PERN11 A65 PEX_TXX11*
PETP11 B62 PEX_RX11 / PETN11 B63 PEX_RX11*
PERP12 A68 PEX_TXX12 / PERN12 A69 PEX_TXX12*
PETP12 B66 PEX_RX12 / PETN12 B67 PEX_RX12*
PERP13 A72 PEX_TXX13 / PERN13 A73 PEX_TXX13*
PETP13 B70 PEX_RX13 / PETN13 B71 PEX_RX13*
PERP14 A76 PEX_TXX14 / PERN14 A77 PEX_TXX14*
PETP14 B74 PEX_RX14 / PETN14 B75 PEX_RX14*
PERP15 A80 PEX_TXX15 / PERN15 A81 PEX_TXX15*
PETP15 B78 PEX_RX15 / PETN15 B79 PEX_RX15*
END OF X16
A51 B53 A54 B56 A58 B60 A62 B64 A66 B68 A70 B72 A74 B76 A78 B80 A82 GND
8.5A
0V
GND
PEXGEN3_SIGNALS
C682 C684 C675 C677 C668 C672 C660 C662 C646 C651 C624 C632 C607 C611 C596 C600 C573 C579 C562 C563 C554 C556 C550 C551 C547 C548 C539 C541 C535 C537 C529 C531
0.22UF 0402 6.3V 10% X5R COMMON
IN 18
PEX_RST_BUF*
NV_NETCLASS
DIFF_PAIR
NET_NAME
PEX_TX0 … PEX_TX15
PEX_TX0* … PEX_TX15*
G1A
BGA_0908_P080_P085_P100_290X290
COMMON
1/17 PCI_EXPRESS
GK107/GF108
GF117
AJ11 PEX_WAKE NC
AJ12 PEX_RST
AK12 PEX_CLKREQ
AL13 PEX_REFCLK
AK13 PEX_REFCLK
AK14 PEX_TX0 / AJ14 PEX_TX0
AN12 PEX_RX0 / AM12 PEX_RX0
AH14 PEX_TX1 / AG14 PEX_TX1
AN14 PEX_RX1 / AM14 PEX_RX1
AK15 PEX_TX2 / AJ15 PEX_TX2
AP14 PEX_RX2 / AP15 PEX_RX2
AL16 PEX_TX3 / AK16 PEX_TX3
AN15 PEX_RX3 / AM15 PEX_RX3
AK17 PEX_TX4 / AJ17 PEX_TX4
AN17 PEX_RX4 / AM17 PEX_RX4
AH17 PEX_TX5 / AG17 PEX_TX5
AP17 PEX_RX5 / AP18 PEX_RX5
AK18 PEX_TX6 / AJ18 PEX_TX6
AN18 PEX_RX6 / AM18 PEX_RX6
AL19 PEX_TX7 / AK19 PEX_TX7
AN20 PEX_RX7 / AM20 PEX_RX7
AK20 PEX_TX8 / AJ20 PEX_TX8
AP20 PEX_RX8 / AP21 PEX_RX8
AH20 PEX_TX9 / AG20 PEX_TX9
AN21 PEX_RX9 / AM21 PEX_RX9
AK21 PEX_TX10 / AJ21 PEX_TX10
AN23 PEX_RX10 / AM23 PEX_RX10
AL22 PEX_TX11 / AK22 PEX_TX11
AP23 PEX_RX11 / AP24 PEX_RX11
AK23 PEX_TX12 / AJ23 PEX_TX12
AN24 PEX_RX12 / AM24 PEX_RX12
AH23 PEX_TX13 / AG23 PEX_TX13
AN26 PEX_RX13 / AM26 PEX_RX13
AK24 PEX_TX14 / AJ24 PEX_TX14
AP26 PEX_RX14 / AP27 PEX_RX14
AL25 PEX_TX15 / AK25 PEX_TX15
AN27 PEX_RX15 / AM27 PEX_RX15
PEX LANES 8 TO 15 NC FOR GF117
PEX_IOVDD AG19 AG21 AG22 AG24 AH21 AH25
PEX_IOVDDQ AG13 AG15 AG16 AG18 AG25 AH15 AH18 AH26 AH27 AJ27 AK27 AL27 AM28 AN28
1.500 Amps GF108
2.420 Amps GK107
C602 1UF 6.3V 10% X5R 0402 COMMON
C598 1UF 6.3V 10% X5R 0402 COMMON
C606 4.7UF 6.3V 20% X5R 0603 COMMON
C616 1UF 6.3V 10% X5R 0402 COMMON
C613 1UF 6.3V 10% X5R 0402 COMMON
C589 4.7UF 6.3V 20% X5R 0603 COMMON
PLACE UNDER GPU
PEX_VDD
C570 1UF 6.3V 10% X5R 0402 COMMON
C561 1UF 6.3V 10% X5R 0402 COMMON
C559 10UF 6.3V 20% X5R 0805 COMMON
C566 10UF 6.3V 20% X5R 0805 COMMON
C568 1UF 6.3V 10% X5R 0402 COMMON
C569 1UF 6.3V 10% X5R 0402 COMMON
C567 10UF 6.3V 20% X5R 0805 COMMON
C565 10UF 6.3V 20% X5R 0805 COMMON
GND
PLACE CLOSE TO GPU
GF108: 4x0.1u+4x1u+2x4.7u+2x10u+2x22u
GK107: 4x1u+2x4.7u+4x10u+4x22u(Midway between GPU and power supply)
GF108 GK107/GF117
NC PEX_PLL_HVDD AH12
PEX_SVDD_3V3 AG12
0.080 Amps GF108
0.189 Amps GK107
3V3_PEX
C620 0.1UF 16V 10% X7R 0402 COMMON
C627 4.7UF 6.3V 20% X5R 0603 COMMON
C628 4.7UF 6.3V 20% X5R 0603 COMMON
GND
GF108: 0.1u+4.7u
GK107: 0.1u+2x4.7u
PLACE CLOSE TO GPU
VDD_SENSE L4 NVVDD_SENSE OUT 22
GND_SENSE L5 GND_SENSE OUT 22
C53 1000PF 50V 10% X7R COMMON 0402
Place it on NVVDD VRM side
3V3AUX_NC P8
PEX_TSTCLK_OUT AJ26
PEX_TSTCLK_OUT AK26
PEX_PLLVDD AG26 PEX_PLLVDD
0.300MM
1V
0.130 Amps GK107
0.145 Amps GF108
C582 0.1UF 16V 10% X7R 0402 COMMON
PLACE UNDER GPU
PEX_VDD
R540 0 0603 +0.05R COMMON
C560 1UF 6.3V 10% X5R 0402 COMMON
C555 4.7UF 6.3V 20% X5R 0603 COMMON
GND
GF108: 0.1u+1u+4.7u+120R/0.18R
GK107: 0.1u+1u+4.7u
PLACE CLOSE TO GPU
TESTMODE AK11 GPU_TESTMODE R558 10K 0402 5% COMMON GND
PEX_TERMP AP29 PEX_TERMP R141 2.49K 0402 1% COMMON GND

MICRO-STAR INT'L CO.,LTD

MS-V280

Size	Document Description	Rev
Custom	01_Table of Contents	1.0

Date: Tuesday, August 14, 2012 Sheet 2 of 25

GPU Frame Buffer Partition A/B

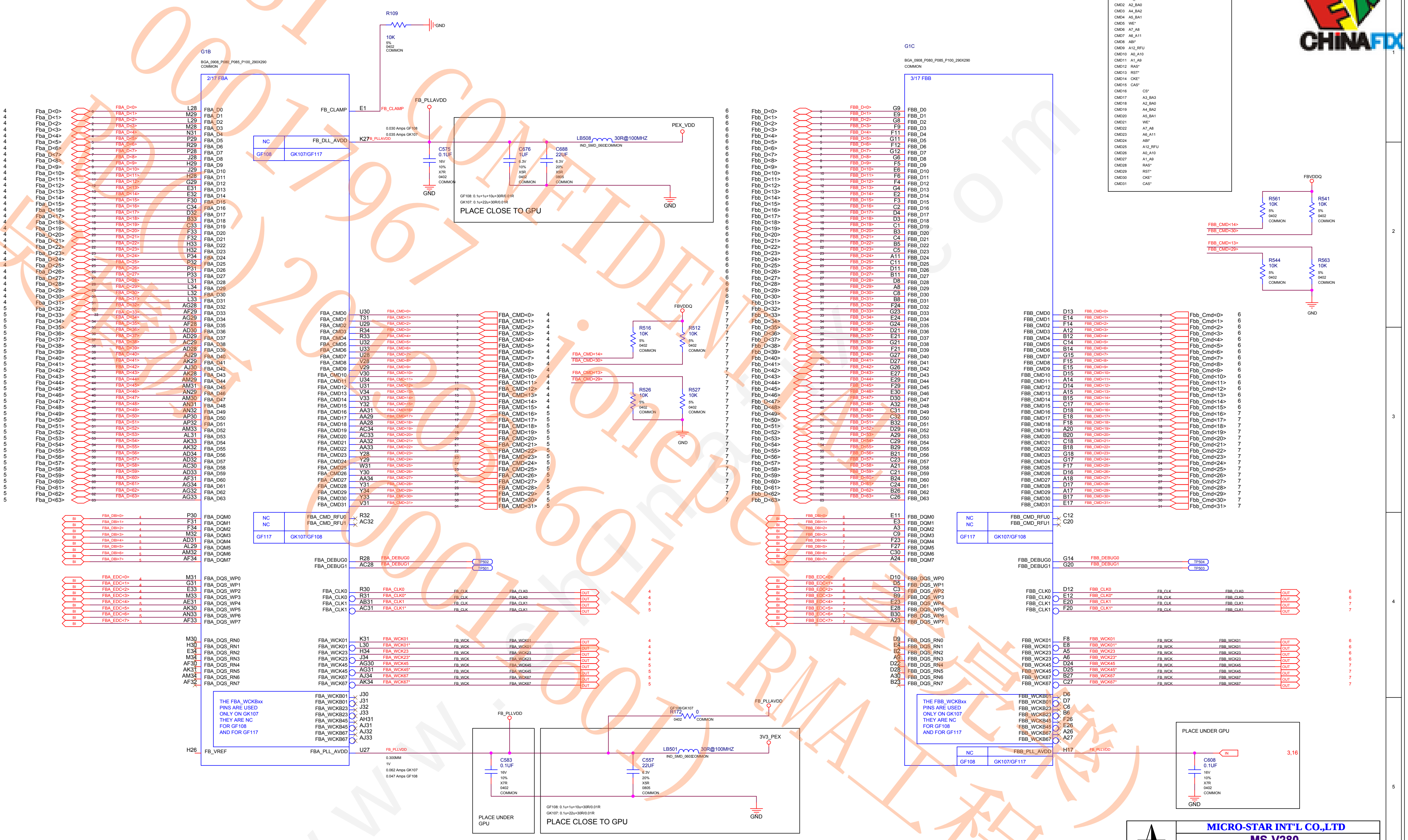

G1B
BGA_0908_P080_P085_P100_290X290
COMMON
2/17 FBA
FBA_D0 … FBA_D63
Fba_D<0> … Fba_D<63>
FBA_D<0> … FBA_D<63>
FB_CLAMP
E1
R109
10K
5%
0402
COMMON
GND
FB_PLLAVDD
FB_DLL_AVDD
K27
NC
GF108
GK107/GF117
0.030 Amps GF108
0.035 Amps GK107
C575
0.1UF
16V
10%
X7R
0402
COMMON
C676
1UF
6.3V
10%
X5R
0402
COMMON
C688
22UF
6.3V
20%
X5R
0805
COMMON
LB508
30R@100MHZ
IND_SMD_0603
PEX_VDD
GF108: 0.1u+1u+10u+30R/0.01R
GK107: 0.1u+22u+30R/0.01R
PLACE CLOSE TO GPU
FBA_CMD0 … FBA_CMD31
FBA_CMD<0> … FBA_CMD<31>
FBVDDQ
R516
10K
R512
10K
R526
10K
R527
10K
FBA_CMD<14>
FBA_CMD<30>
FBA_CMD<13>
FBA_CMD<29>
FBA_DQM0 … FBA_DQM7
FBA_DBI<0> … FBA_DBI<7>
BI
FBA_CMD_RFU0
FBA_CMD_RFU1
R32
AC32
GF117
GK107/GF108
FBA_DEBUG0
FBA_DEBUG1
R28
AC28
TP502
TP501
FBA_DQS_WP0 … FBA_DQS_WP7
FBA_EDC<0> … FBA_EDC<7>
FBA_CLK0
FBA_CLK0*
FBA_CLK1
FBA_CLK1*
FB_CLK
OUT
FBA_DQS_RN0 … FBA_DQS_RN7
FBA_WCK01
FBA_WCK01*
FBA_WCK23
FBA_WCK23*
FBA_WCK45
FBA_WCK45*
FBA_WCK67
FBA_WCK67*
FB_WCK
THE FBA_WCKBxx
PINS ARE USED
ONLY ON GK107
THEY ARE NC
FOR GF108
AND FOR GF117
FBA_WCKB01
FBA_WCKB23
FBA_WCKB45
FBA_WCKB67
H26
FB_VREF
FBA_PLL_AVDD
U27
FB_PLLVDD
0.300MM
1V
0.062 Amps GK107
0.047 Amps GF108
C583
0.1UF
16V
10%
X7R
0402
COMMON
PLACE UNDER
GPU
GF108/GK107
R172
0
0402
COMMON
LB501
30R@100MHZ
IND_SMD_0603
COMMON
3V3_PEX
C557
22UF
6.3V
20%
X5R
0805
COMMON
GF108: 0.1u+1u+10u+30R/0.01R
GK107: 0.1u+22u+30R/0.01R
PLACE CLOSE TO GPU
GND
G1C
BGA_0908_P080_P085_P100_290X290
COMMON
3/17 FBB
FBB_D0 … FBB_D63
Fbb_D<0> … Fbb_D<63>
FBB_D<0> … FBB_D<63>
FBB_CMD0 … FBB_CMD31
Fbb_Cmd<0> … Fbb_Cmd<31>
FBB_CMD<0> … FBB_CMD<31>
FBB_DQM0 … FBB_DQM7
FBB_DBI<0> … FBB_DBI<7>
FBB_CMD_RFU0
FBB_CMD_RFU1
C12
C20
FBB_DEBUG0
FBB_DEBUG1
G14
G20
TP504
TP503
FBB_DQS_WP0 … FBB_DQS_WP7
FBB_EDC<0> … FBB_EDC<7>
FBB_CLK0
FBB_CLK0*
FBB_CLK1
FBB_CLK1*
FBB_DQS_RN0 … FBB_DQS_RN7
FBB_WCK01
FBB_WCK01*
FBB_WCK23
FBB_WCK23*
FBB_WCK45
FBB_WCK45*
FBB_WCK67
FBB_WCK67*
THE FBB_WCKBxx
PINS ARE USED
ONLY ON GK107
THEY ARE NC
FOR GF108
AND FOR GF117
FBB_WCKB01
FBB_WCKB23
FBB_WCKB45
FBB_WCKB67
FBB_PLL_AVDD
H17
NC
GF108
GK107/GF117
FBVDDQ
R561
10K
R541
10K
R544
10K
R563
10K
5%
0402
COMMON
FBB_CMD<14>
FBB_CMD<30>
FBB_CMD<13>
FBB_CMD<29>
GND
PLACE UNDER GPU
IN
3,16
C608
0.1UF
16V
10%
X7R
0402
COMMON
GND

GDDR5_BGA170_MIRR COMMAND MAP

	0..31	32..63
CMD0	CS*	
CMD1	A3_BA3	
CMD2	A2_BA0	
CMD3	A4_BA2	
CMD4	A5_BA1	
CMD5	WE*	
CMD6	A7_A8	
CMD7	A6_A11	
CMD8	ABI*	
CMD9	A12_RFU	
CMD10	A0_A10	
CMD11	A1_A9	
CMD12	RAS*	
CMD13	RST*	
CMD14	CKE*	
CMD15	CAS*	
CMD16		CS*
CMD17		A3_BA3
CMD18		A2_BA0
CMD19		A4_BA2
CMD20		A5_BA1
CMD21		WE*
CMD22		A7_A8
CMD23		A6_A11
CMD24		ABI*
CMD25		A12_RFU
CMD26		A0_A10
CMD27		A1_A9
CMD28		RAS*
CMD29		RST*
CMD30		CKE*
CMD31		CAS*

MICRO-STAR INT'L CO.,LTD

MS-V280

Size: Custom
Document Description: 01_Table of Contents
Rev: 1.0
Date: Tuesday, August 14, 2012
Sheet 3 of 25

CONFIDENTIAL
RMA工程課
CHINAFIX

Page 4:FBA Partition [31..0]

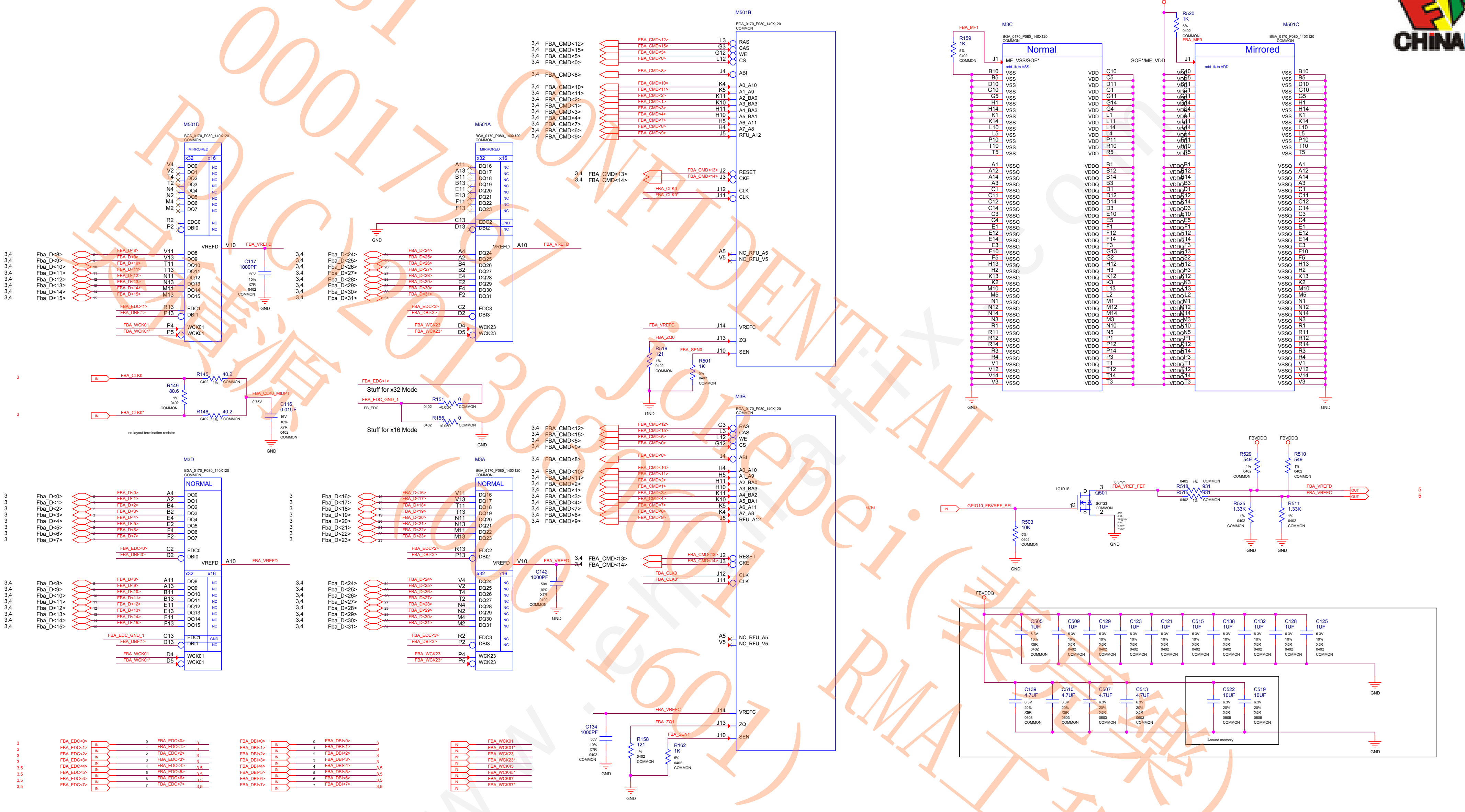
M501D
BGA_0170_P080_140X120
MIRRORED
x32 x16
DQ0 DQ1 DQ2 DQ3 DQ4 DQ5 DQ6 DQ7
EDC0 DBI0
VREFD V10 FBA_VREFD
Fba_D<8> … Fba_D<15>
DQ8 DQ9 DQ10 DQ11 DQ12 DQ13 DQ14 DQ15
EDC1 DBI1
WCK01 WCK01
C117 1000PF 50V 10% X7R 0402 COMMON
GND
M501A
DQ16 … DQ23
EDC2 DBI2
VREFD A10 FBA_VREFD
Fba_D<24> … Fba_D<31>
DQ24 … DQ31
EDC3 DBI3
WCK23 WCK23
M501B
FBA_CMD<12> FBA_CMD<15> FBA_CMD<5> FBA_CMD<0>
RAS CAS WE CS
FBA_CMD<8> ABI
FBA_CMD<10> FBA_CMD<11> FBA_CMD<2> FBA_CMD<1> FBA_CMD<3> FBA_CMD<4> FBA_CMD<7> FBA_CMD<6> FBA_CMD<9>
A0_A10 A1_A9 A2_BA0 A3_BA3 A4_BA2 A5_BA1 A6_A11 A7_A8 RFU_A12
FBA_CMD<13> FBA_CMD<14>
RESET CKE
FBA_CLK0 FBA_CLK0*
CLK CLK
NC_RFU_A5 NC_RFU_V5
FBA_VREFC VREFC
FBA_ZQ0 ZQ
FBA_SEN0 SEN
R519 121 1% 0402 COMMON
R501 1K 5% 0402 COMMON
M3C
Normal
MF_VSS/SOE*
add 1k to VSS
VSS VDD VSSQ VDDQ
R159 1K 5% 0402 COMMON
FBA_MF1
FBVDDQ
R520 1K 5% 0402 COMMON
FBA_MF0
SOE*/MF_VDD
M501C
Mirrored
add 1k to VDD
FBA_CLK0
R145 40.2 0402 1% COMMON
R149 80.6 1% 0402 COMMON
FBA_CLK0_MIDPT
0.75V
C116 0.01UF 16V 10% X7R 0402 COMMON
FBA_CLK0*
R146 40.2 0402 1% COMMON
co-layout termination resistor
FBA_EDC<1>
Stuff for x32 Mode
FBA_EDC_GND_1
FB_EDC
R151 0 0402 +0.05R COMMON
R155 0 0402 +0.05R COMMON
Stuff for x16 Mode
M3D
NORMAL
Fba_D<0> … Fba_D<7>
FBA_EDC<0> FBA_DBI<0>
FBA_EDC_GND_1
M3A
Fba_D<16> … Fba_D<23>
C142 1000PF 50V 10% X7R 0402 COMMON
M3B
FBA_ZQ1 FBA_SEN1
C134 1000PF 50V 10% X7R 0402 COMMON
R158 121 1% 0402 COMMON
R162 1K 5% 0402 COMMON
GPIO10_FBVREF_SEL
R503 10K 5% 0402 COMMON
Q501 1G1D1S SOT23 COMMON
60V 0.3A 2R@10V 0.8A 0.35W +/-20V
0.3mm FBA_VREF_FET
R518 931 0402 1% COMMON
R515 931 0402 1% COMMON
R529 549 1% 0402 COMMON
R510 549 1% 0402 COMMON
R525 1.33K 1% 0402 COMMON
R511 1.33K 1% 0402 COMMON
FBA_VREFD FBA_VREFC
OUT OUT
C505 C509 C129 C123 C121 C515 C138 C132 C128 C125 1UF 6.3V 10% X5R 0402 COMMON
C139 C510 C507 C513 4.7UF 6.3V 20% X5R 0603 COMMON
C522 C519 10UF 6.3V 20% X5R 0805 COMMON
Around memory
FBA_EDC<0> … FBA_EDC<7>
FBA_DBI<0> … FBA_DBI<7>
FBA_WCK01 FBA_WCK01* FBA_WCK23 FBA_WCK23* FBA_WCK45 FBA_WCK45* FBA_WCK67 FBA_WCK67*
IN

MICRO-STAR INT'L CO.,LTD

MS-V280

Size Custom | Document Description 01_Table of Contents | Rev 1.0

Date: Tuesday, August 14, 2012 | Sheet 4 of 25

Page 5:FBA Partition[63..32]

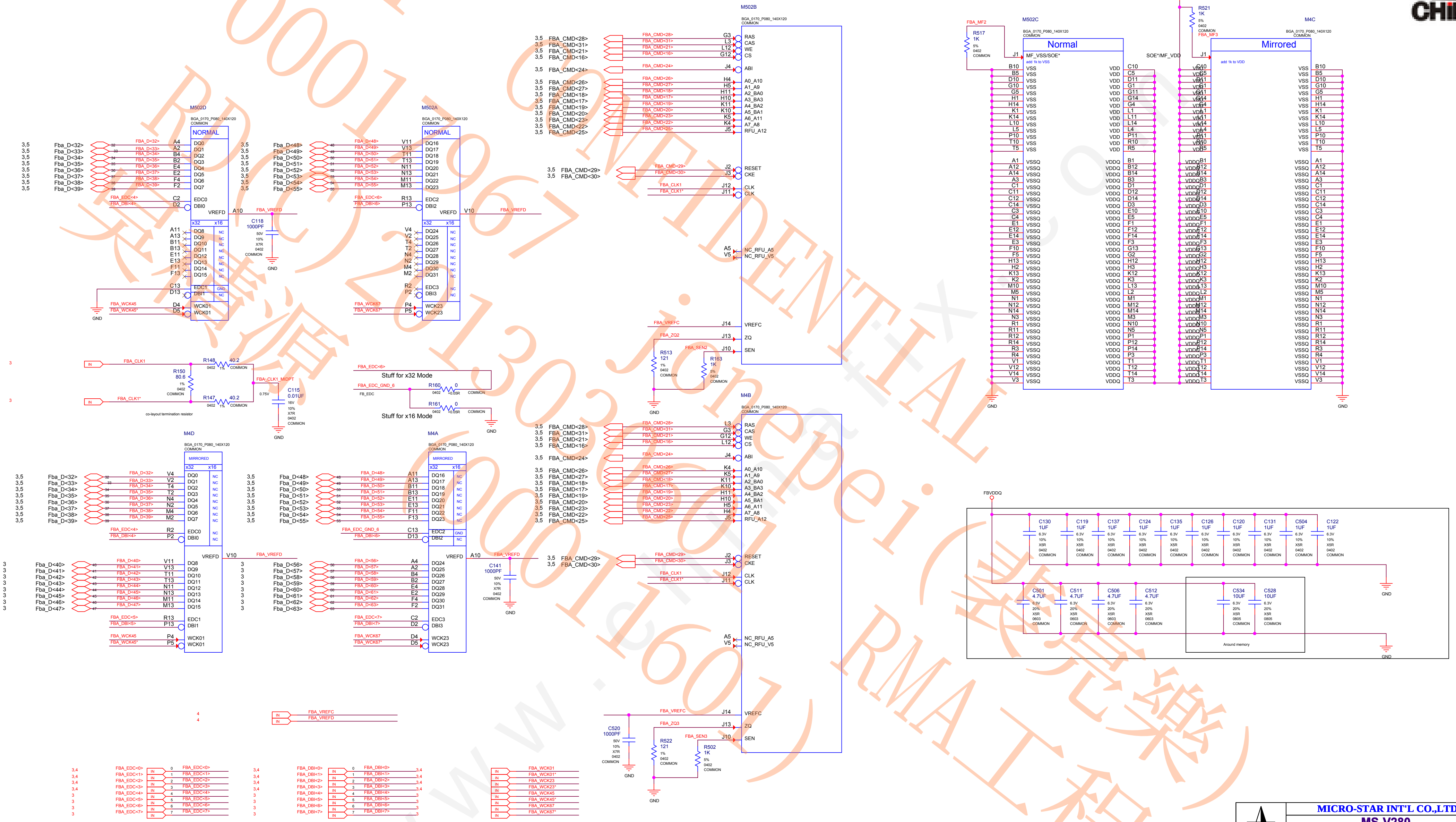

M502D
BGA_0170_P080_140X120
COMMON
NORMAL
Fba_D<32> … Fba_D<39>
FBA_D<32> A4 DQ0
FBA_D<33> A2 DQ1
FBA_D<34> B4 DQ2
FBA_D<35> B2 DQ3
FBA_D<36> E4 DQ4
FBA_D<37> E2 DQ5
FBA_D<38> F4 DQ6
FBA_D<39> F2 DQ7
FBA_EDC<4> C2 EDC0
FBA_DBI<4> D2 DBI0
VREFD A10 FBA_VREFD
x32 x16
A11 DQ8 A13 DQ9 B11 DQ10 B13 DQ11 E11 DQ12 E13 DQ13 F11 DQ14 F13 DQ15
NC
C13 EDC1 GND
D13 DBI1
FBA_WCK45 D4 WCK01
FBA_WCK45* D5 WCK01
GND
C118
1000PF
50V
10%
X7R
0402
COMMON
M502A
NORMAL
Fba_D<48> … Fba_D<55>
FBA_D<48> V11 DQ16
FBA_D<49> V13 DQ17
FBA_D<50> T11 DQ18
FBA_D<51> T13 DQ19
FBA_D<52> N11 DQ20
FBA_D<53> N13 DQ21
FBA_D<54> M11 DQ22
FBA_D<55> M13 DQ23
FBA_EDC<6> R13 EDC2
FBA_DBI<6> P13 DBI2
VREFD V10 FBA_VREFD
V4 DQ24 V2 DQ25 T4 DQ26 T2 DQ27 N4 DQ28 N2 DQ29 M4 DQ30 M2 DQ31
R2 EDC3 P2 DBI3
FBA_WCK67 P4 WCK23
FBA_WCK67* P5 WCK23
3,5
M502B
RAS G3 FBA_CMD<28>
CAS L3 FBA_CMD<31>
WE L12 FBA_CMD<21>
CS G12 FBA_CMD<16>
ABI J4 FBA_CMD<24>
A0_A10 H4 FBA_CMD<26>
A1_A9 H5 FBA_CMD<27>
A2_BA0 H11 FBA_CMD<18>
A3_BA3 H10 FBA_CMD<17>
A4_BA2 K11 FBA_CMD<19>
A5_BA1 K10 FBA_CMD<20>
A6_A11 K5 FBA_CMD<23>
A7_A8 K4 FBA_CMD<22>
RFU_A12 J5 FBA_CMD<25>
RESET J2 FBA_CMD<29>
CKE J3 FBA_CMD<30>
CLK J12 FBA_CLK1
CLK J11 FBA_CLK1*
NC_RFU_A5 A5
NC_RFU_V5 V5
VREFC J14 FBA_VREFC
ZQ J13 FBA_ZQ2
SEN J10 FBA_SEN2
R513 121 1% 0402 COMMON
R163 1K 5% 0402 COMMON
GND
FBA_MF2
R517 1K 5% 0402 COMMON
M502C
Normal
J1 MF_VSS/SOE*
add 1k to VSS
VSS: B10 B5 D10 G10 G5 H1 H14 K1 K14 L10 L5 P10 T10 T5
VSSQ: A1 A12 A14 A3 C1 C11 C12 C14 C3 C4 E1 E12 E14 E3 F10 F5 H13 H2 K13 K2 M10 M5 N1 N12 N14 N3 R1 R11 R12 R14 R3 R4 V1 V12 V14 V3
VDD: C10 C5 D11 G1 G11 G14 G4 L1 L11 L14 L4 P11 R10 R5
VDDQ: B1 B12 B14 B3 D1 D12 D14 D3 E10 E5 F1 F12 F14 F3 G13 G2 H12 H3 K12 K3 L13 L2 M1 M12 M14 M3 N10 N5 P1 P12 P14 P3 T1 T12 T14 T3
SOE*/MF_VDD
FBVDDQ
R521 1K 5% 0402 COMMON
FBA_MF3
M4C
Mirrored
J1
add 1k to VDD
GND
FBA_CLK1
R148 40.2 0402 1% COMMON
R150 80.6 1% 0402 COMMON
FBA_CLK1*
R147 40.2 0402 1% COMMON
co-layout termination resistor
FBA_CLK1_MIDPT
0.75V
C115 0.01UF 16V 10% X7R 0402 COMMON
FBA_EDC<6>
Stuff for x32 Mode
FBA_EDC_GND_6
FB_EDC
R160 0 0402 +0.05R COMMON
R161 0 0402 +0.05R COMMON
Stuff for x16 Mode
M4D
MIRRORED
FBA_D<32> V4 DQ0
FBA_D<33> V2 DQ1
FBA_D<34> T4 DQ2
FBA_D<35> T2 DQ3
FBA_D<36> N4 DQ4
FBA_D<37> N2 DQ5
FBA_D<38> M4 DQ6
FBA_D<39> M2 DQ7
FBA_EDC<4> R2 EDC0
FBA_DBI<4> P2 DBI0
VREFD V10 FBA_VREFD
FBA_D<40> V11 DQ8
FBA_D<41> V13 DQ9
FBA_D<42> T11 DQ10
FBA_D<43> T13 DQ11
FBA_D<44> N11 DQ12
FBA_D<45> N13 DQ13
FBA_D<46> M11 DQ14
FBA_D<47> M13 DQ15
FBA_EDC<5> R13 EDC1
FBA_DBI<5> P13 DBI1
FBA_WCK45 P4 WCK01
FBA_WCK45* P5 WCK01
M4A
MIRRORED
FBA_D<48> A11 DQ16
FBA_D<49> A13 DQ17
FBA_D<50> B11 DQ18
FBA_D<51> B13 DQ19
FBA_D<52> E11 DQ20
FBA_D<53> E13 DQ21
FBA_D<54> F11 DQ22
FBA_D<55> F13 DQ23
FBA_EDC_GND_6 C13 EDC2
FBA_DBI<6> D13 DBI2
VREFD A10 FBA_VREFD
FBA_D<56> A4 DQ24
FBA_D<57> A2 DQ25
FBA_D<58> B4 DQ26
FBA_D<59> B2 DQ27
FBA_D<60> E4 DQ28
FBA_D<61> E2 DQ29
FBA_D<62> F4 DQ30
FBA_D<63> F2 DQ31
FBA_EDC<7> C2 EDC3
FBA_DBI<7> D2 DBI3
FBA_WCK67 D4 WCK23
FBA_WCK67* D5 WCK23
C141 1000PF 50V 10% X7R 0402 COMMON
M4B
RAS L3 FBA_CMD<28>
CAS G3 FBA_CMD<31>
WE G12 FBA_CMD<21>
CS L12 FBA_CMD<16>
ABI J4 FBA_CMD<24>
A0_A10 K4 FBA_CMD<26>
A1_A9 K5 FBA_CMD<27>
A2_BA0 K11 FBA_CMD<18>
A3_BA3 K10 FBA_CMD<17>
A4_BA2 H11 FBA_CMD<19>
A5_BA1 H10 FBA_CMD<20>
A6_A11 H5 FBA_CMD<23>
A7_A8 H4 FBA_CMD<22>
RFU_A12 J5 FBA_CMD<25>
RESET J2 FBA_CMD<29>
CKE J3 FBA_CMD<30>
CLK J12 FBA_CLK1
CLK J11 FBA_CLK1*
VREFC J14 FBA_VREFC
ZQ J13 FBA_ZQ3
SEN J10 FBA_SEN3
C520 1000PF 50V 10% X7R 0402 COMMON
R522 121 1% 0402 COMMON
R502 1K 5% 0402 COMMON
FBVDDQ
C130 C119 C137 C124 C135 C126 C120 C131 C504 C122 1UF 6.3V 10% X5R 0402 COMMON
C501 C511 C506 C512 4.7UF 6.3V 20% X5R 0603 COMMON
C534 C528 10UF 6.3V 20% X5R 0805 COMMON
Around memory
IN FBA_VREFC
IN FBA_VREFD
FBA_EDC<0> … FBA_EDC<7>
FBA_DBI<0> … FBA_DBI<7>
FBA_WCK01 FBA_WCK01* FBA_WCK23 FBA_WCK23* FBA_WCK45 FBA_WCK45* FBA_WCK67 FBA_WCK67*

MICRO-STAR INT'L CO.,LTD

MS-V280

Size	Document Description	Rev
Custom	01_Table of Contents	1.0

Date: Tuesday, August 14, 2012 Sheet 5 of 25

Page 6:FBB Partition [31..0]

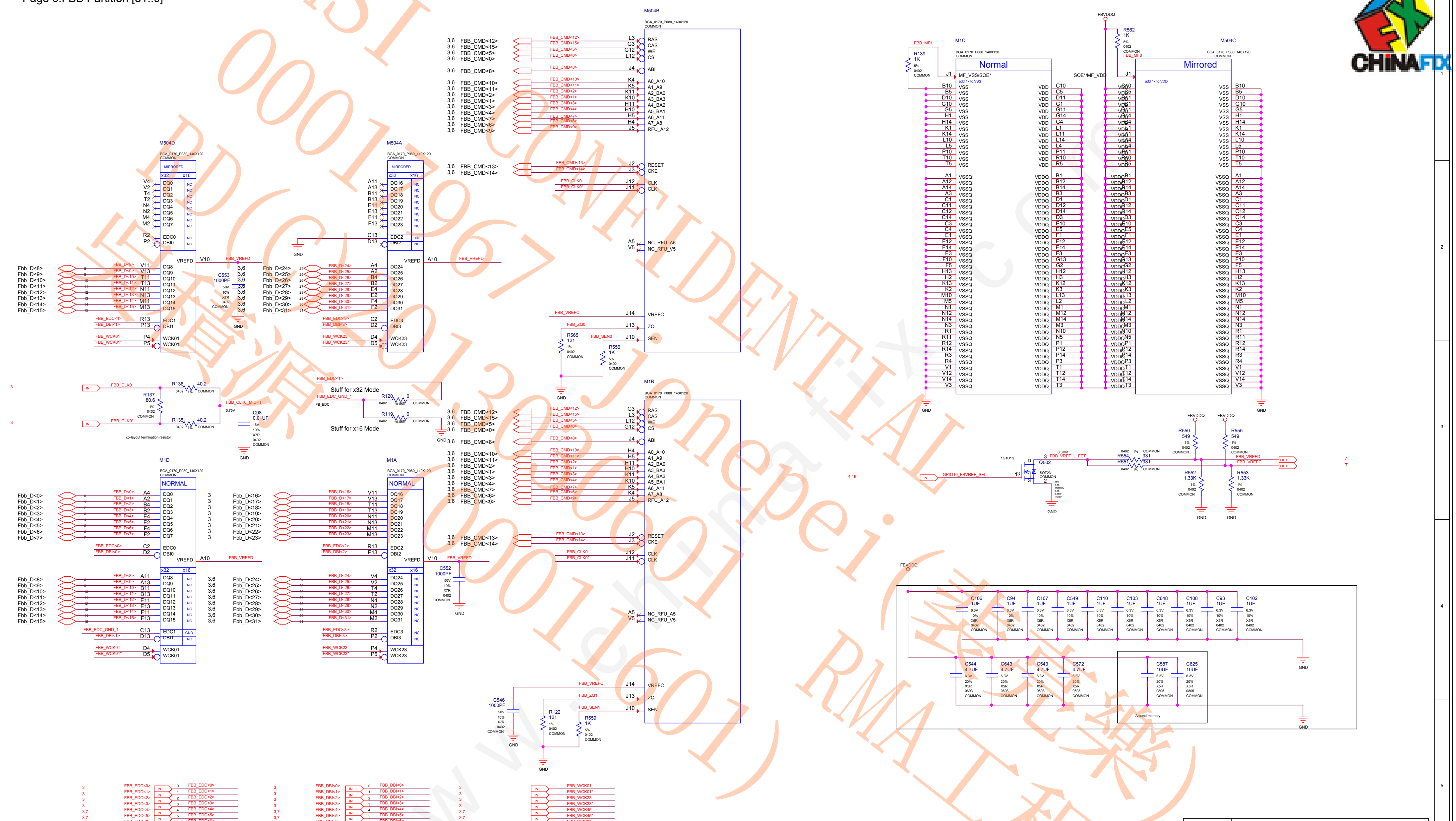
M504D
BGA_0170_P080_140X120
COMMON
MIRRORED
x32 x16
V4 V2 T4 T2 N4 N2 M4 M2
DQ0 DQ1 DQ2 DQ3 DQ4 DQ5 DQ6 DQ7
NC
R2 P2
EDC0 DBI0
VREFD V10 FBB_VREFD
Fbb_D<8> Fbb_D<9> Fbb_D<10> Fbb_D<11> Fbb_D<12> Fbb_D<13> Fbb_D<14> Fbb_D<15>
FBB_D<8> FBB_D<9> FBB_D<10> FBB_D<11> FBB_D<12> FBB_D<13> FBB_D<14> FBB_D<15>
V11 V13 T11 T13 N11 N13 M11 M13
DQ8 DQ9 DQ10 DQ11 DQ12 DQ13 DQ14 DQ15
FBB_EDC<1> R13 EDC1
FBB_DBI<1> P13 DBI1
FBB_WCK01 P4 WCK01
FBB_WCK01* P5 WCK01
C553 1000PF 50V 10% X7R 0402 COMMON
GND
M504A
BGA_0170_P080_140X120
COMMON
MIRRORED
A11 A13 B11 B13 E11 E13 F11 F13
DQ16 DQ17 DQ18 DQ19 DQ20 DQ21 DQ22 DQ23
C13 D13 EDC2 DBI2 GND NC
VREFD A10 FBB_VREFD
Fbb_D<24> Fbb_D<25> Fbb_D<26> Fbb_D<27> Fbb_D<28> Fbb_D<29> Fbb_D<30> Fbb_D<31>
FBB_D<24> FBB_D<25> FBB_D<26> FBB_D<27> FBB_D<28> FBB_D<29> FBB_D<30> FBB_D<31>
A4 A2 B4 B2 E4 E2 F4 F2
DQ24 DQ25 DQ26 DQ27 DQ28 DQ29 DQ30 DQ31
FBB_EDC<3> C2 EDC3
FBB_DBI<3> D2 DBI3
FBB_WCK23 D4 WCK23
FBB_WCK23* D5 WCK23
M504B
BGA_0170_P080_140X120
COMMON
3,6 FBB_CMD<12> L3 RAS
3,6 FBB_CMD<15> G3 CAS
3,6 FBB_CMD<5> G12 WE
3,6 FBB_CMD<0> L12 CS
3,6 FBB_CMD<8> J4 ABI
3,6 FBB_CMD<10> K4 A0_A10
3,6 FBB_CMD<11> K5 A1_A9
3,6 FBB_CMD<2> K11 A2_BA0
3,6 FBB_CMD<1> K10 A3_BA3
3,6 FBB_CMD<3> H11 A4_BA2
3,6 FBB_CMD<4> H10 A5_BA1
3,6 FBB_CMD<7> H5 A6_A11
3,6 FBB_CMD<6> H4 A7_A8
3,6 FBB_CMD<9> J5 RFU_A12
3,6 FBB_CMD<13> J2 RESET
3,6 FBB_CMD<14> J3 CKE
FBB_CLK0 J12 CLK
FBB_CLK0* J11 CLK
A5 NC_RFU_A5
V5 NC_RFU_V5
FBB_VREFC J14 VREFC
FBB_ZQ0 J13 ZQ
FBB_SEN0 J10 SEN
R565 121 1% 0402 COMMON
R556 1K 5% 0402 COMMON
GND
IN FBB_CLK0 3
IN FBB_CLK0* 3
R136 40.2 0402 1% COMMON
R137 80.6 1% 0402 COMMON
R135 40.2 0402 1% COMMON
FBB_CLK0_MIDPT
0.75V
C98 0.01UF 16V 10% X7R 0402 COMMON
co-layout termination resistor
FBB_EDC<1>
Stuff for x32 Mode
FBB_EDC_GND_1
FB_EDC
R120 0 0402 +0.05R COMMON
R119 0 0402 +0.05R COMMON
Stuff for x16 Mode
M1D
BGA_0170_P080_140X120
COMMON
NORMAL
Fbb_D<0> Fbb_D<1> Fbb_D<2> Fbb_D<3> Fbb_D<4> Fbb_D<5> Fbb_D<6> Fbb_D<7>
FBB_D<0> FBB_D<1> FBB_D<2> FBB_D<3> FBB_D<4> FBB_D<5> FBB_D<6> FBB_D<7>
A4 A2 B4 B2 E4 E2 F4 F2
DQ0 DQ1 DQ2 DQ3 DQ4 DQ5 DQ6 DQ7
FBB_EDC<0> C2 EDC0
FBB_DBI<0> D2 DBI0
VREFD A10 FBB_VREFD
x32 x16
A11 A13 B11 B13 E11 E13 F11 F13
DQ8 DQ9 DQ10 DQ11 DQ12 DQ13 DQ14 DQ15
FBB_EDC_GND_1 C13 EDC1 GND
FBB_DBI<1> D13 DBI1 NC
FBB_WCK01 D4 WCK01
FBB_WCK01* D5 WCK01
M1A
BGA_0170_P080_140X120
COMMON
NORMAL
Fbb_D<16> Fbb_D<17> Fbb_D<18> Fbb_D<19> Fbb_D<20> Fbb_D<21> Fbb_D<22> Fbb_D<23>
FBB_D<16> FBB_D<17> FBB_D<18> FBB_D<19> FBB_D<20> FBB_D<21> FBB_D<22> FBB_D<23>
V11 V13 T11 T13 N11 N13 M11 M13
DQ16 DQ17 DQ18 DQ19 DQ20 DQ21 DQ22 DQ23
FBB_EDC<2> R13 EDC2
FBB_DBI<2> P13 DBI2
VREFD V10 FBB_VREFD
C552 1000PF 50V 10% X7R 0402 COMMON
V4 V2 T4 T2 N4 N2 M4 M2
DQ24 DQ25 DQ26 DQ27 DQ28 DQ29 DQ30 DQ31
FBB_EDC<3> R2 EDC3
FBB_DBI<3> P2 DBI3
FBB_WCK23 P4 WCK23
FBB_WCK23* P5 WCK23
M1B
BGA_0170_P080_140X120
COMMON
G3 RAS L3 CAS L12 WE G12 CS J4 ABI
H4 A0_A10 H5 A1_A9 H11 A2_BA0 H10 A3_BA3 K11 A4_BA2 K10 A5_BA1 K5 A6_A11 K4 A7_A8 J5 RFU_A12
J2 RESET J3 CKE J12 CLK J11 CLK
A5 NC_RFU_A5 V5 NC_RFU_V5
FBB_VREFC J14 VREFC
FBB_ZQ1 J13 ZQ
FBB_SEN1 J10 SEN
C546 1000PF 50V 10% X7R 0402 COMMON
R122 121 1% 0402 COMMON
R559 1K 5% 0402 COMMON
M1C
BGA_0170_P080_140X120
COMMON
Normal
FBB_MF1
R139 1K 5% 0402 COMMON
J1 MF_VSS/SOE*
add 1k to VSS
VSS VDD VSSQ VDDQ
SOE*/MF_VDD
FBVDDQ
R562 1K 5% 0402 COMMON
FBB_MF0
M504C
BGA_0170_P080_140X120
COMMON
Mirrored
add 1k to VDD
B10 B5 D10 G10 G5 H1 H14 K1 K14 L10 L5 P10 T10 T5
C10 C5 D11 G1 G11 G14 G4 L1 L11 L14 L4 P11 R10 R5
A1 A12 A14 A3 C1 C11 C12 C14 C3 C4 E1 E12 E14 E3 F10 F5 H13 H2 K13 K2 M10 M5 N1 N12 N14 N3 R1 R11 R12 R14 R3 R4 V1 V12 V14 V3
B1 B12 B14 B3 D1 D12 D14 D3 E10 E5 F1 F12 F14 F3 G13 G2 H12 H3 K12 K3 L13 L2 M1 M12 M14 M3 N10 N5 P1 P12 P14 P3 T1 T12 T14 T3
GND
4,16 IN GPIO10_FBVREF_SEL
1G1D1S
Q502 SOT23 COMMON
D G S
60V 0.3A 2R@10V 0.8A 0.35W +/-20V
0.3MM
3 FBB_VREF_L_FET
R554 931 0402 1% COMMON
R551 931 0402 1% COMMON
R550 549 1% 0402 COMMON
R555 549 1% 0402 COMMON
R552 1.33K 1% 0402 COMMON
R553 1.33K 1% 0402 COMMON
FBB_VREFD OUT 7
FBB_VREFC OUT 7
C106 1UF C94 1UF C107 1UF C549 1UF C110 1UF C103 1UF C648 1UF C108 1UF C93 1UF C102 1UF
6.3V 10% X5R 0402 COMMON
C544 4.7UF C643 4.7UF C543 4.7UF C572 4.7UF
6.3V 20% X5R 0603 COMMON
C587 10UF C625 10UF
6.3V 20% X5R 0805 COMMON
Around memory
FBB_EDC<0> … FBB_EDC<7> IN
FBB_DBI<0> … FBB_DBI<7> IN
FBB_WCK01 FBB_WCK01* FBB_WCK23 FBB_WCK23* FBB_WCK45 FBB_WCK45* FBB_WCK67 FBB_WCK67* IN
A B C D E F G H
1 2 3 4 5

MICRO-STAR INT'L CO.,LTD

MS-V280

Size	Document Description	Rev
Custom	01_Table of Contents	1.0

Date: Tuesday, August 14, 2012 Sheet 6 of 25

CONFIDENTIAL
RMA工程課

Page 7:FBB Partition [63..32]

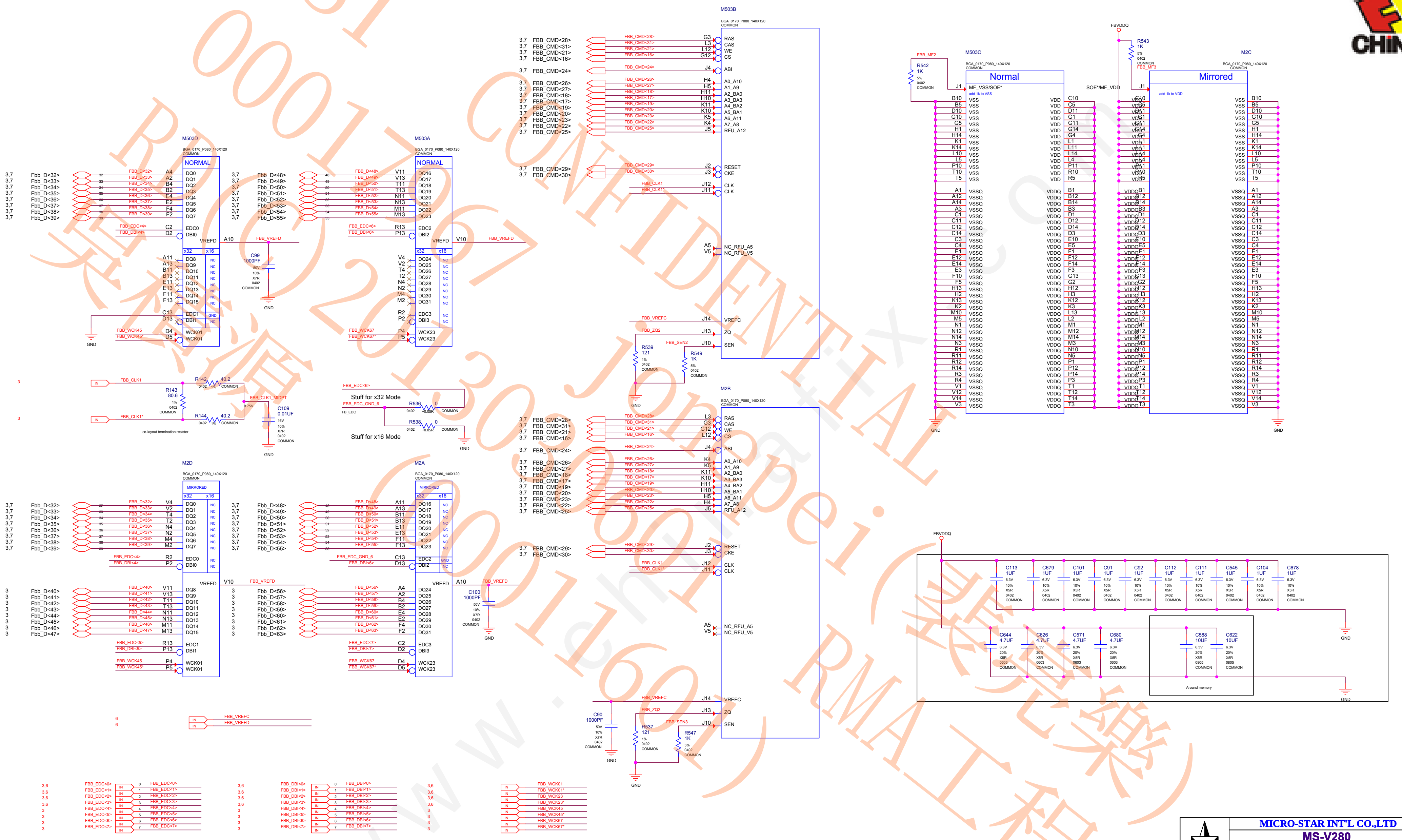
M503D
BGA_0170_P080_140X120
COMMON
NORMAL
Fbb_D<32>
Fbb_D<33>
Fbb_D<34>
Fbb_D<35>
Fbb_D<36>
Fbb_D<37>
Fbb_D<38>
Fbb_D<39>
FBB_EDC<4>
FBB_DBI<4>
DQ0
DQ1
DQ2
DQ3
DQ4
DQ5
DQ6
DQ7
EDC0
DBI0
VREFD
A10
FBB_VREFD
x32
x16
DQ8
DQ9
DQ10
DQ11
DQ12
DQ13
DQ14
DQ15
EDC1
DBI1
WCK01
FBB_WCK45
FBB_WCK45*
NC
GND
C99
1000PF
50V
10%
X7R
0402
COMMON
M503A
Fbb_D<48>
Fbb_D<49>
Fbb_D<50>
Fbb_D<51>
Fbb_D<52>
Fbb_D<53>
Fbb_D<54>
Fbb_D<55>
FBB_EDC<6>
FBB_DBI<6>
DQ16
DQ17
DQ18
DQ19
DQ20
DQ21
DQ22
DQ23
EDC2
DBI2
V10
DQ24
DQ25
DQ26
DQ27
DQ28
DQ29
DQ30
DQ31
EDC3
DBI3
WCK23
FBB_WCK67
FBB_WCK67*
IN
FBB_CLK1
FBB_CLK1*
R142
40.2
R143
80.6
1%
R144
40.2
FBB_CLK1_MIDPT
0.75V
C109
0.01UF
16V
co-layout termination resistor
FBB_EDC<6>
Stuff for x32 Mode
FBB_EDC_GND_6
FB_EDC
R536
0
+0.05R
R538
0
Stuff for x16 Mode
M503B
FBB_CMD<28>
FBB_CMD<31>
FBB_CMD<21>
FBB_CMD<16>
FBB_CMD<24>
FBB_CMD<26>
FBB_CMD<27>
FBB_CMD<18>
FBB_CMD<17>
FBB_CMD<19>
FBB_CMD<20>
FBB_CMD<23>
FBB_CMD<22>
FBB_CMD<25>
FBB_CMD<29>
FBB_CMD<30>
RAS
CAS
WE
CS
ABI
A0_A10
A1_A9
A2_BA0
A3_BA3
A4_BA2
A5_BA1
A6_A11
A7_A8
RFU_A12
RESET
CKE
CLK
NC_RFU_A5
NC_RFU_V5
VREFC
ZQ
SEN
FBB_VREFC
FBB_ZQ2
FBB_SEN2
R539
121
R549
1K
5%
M503C
FBB_MF2
R542
1K
Normal
MF_VSS/SOE*
add 1k to VSS
VSS
VSSQ
VDD
VDDQ
SOE*/MF_VDD
FBVDDQ
R543
1K
FBB_MF3
M2C
Mirrored
add 1k to VDD
M2D
MIRRORED
Fbb_D<40>
Fbb_D<41>
Fbb_D<42>
Fbb_D<43>
Fbb_D<44>
Fbb_D<45>
Fbb_D<46>
Fbb_D<47>
FBB_EDC<4>
FBB_DBI<4>
FBB_EDC<5>
FBB_DBI<5>
M2A
Fbb_D<56>
Fbb_D<57>
Fbb_D<58>
Fbb_D<59>
Fbb_D<60>
Fbb_D<61>
Fbb_D<62>
Fbb_D<63>
FBB_EDC<7>
FBB_DBI<7>
C100
1000PF
M2B
FBB_ZQ3
FBB_SEN3
C90
1000PF
R537
121
R547
1K
FBB_VREFC
FBB_VREFD
FBB_EDC<0>
FBB_EDC<1>
FBB_EDC<2>
FBB_EDC<3>
FBB_EDC<5>
FBB_EDC<7>
FBB_DBI<0>
FBB_DBI<1>
FBB_DBI<2>
FBB_DBI<3>
FBB_WCK01
FBB_WCK01*
FBB_WCK23
FBB_WCK23*
C113
C679
C101
C91
C92
C112
C111
C545
C104
C678
1UF
6.3V
X5R
C644
C626
C571
C680
4.7UF
20%
0603
C588
C622
10UF
0805
Around memory

MICRO-STAR INT'L CO.,LTD		
MS-V280		
Size Custom	Document Description 01_Table of Contents	Rev 1.0
Date: Tuesday, August 14, 2012	Sheet 7 of 25	

FB Decoupling

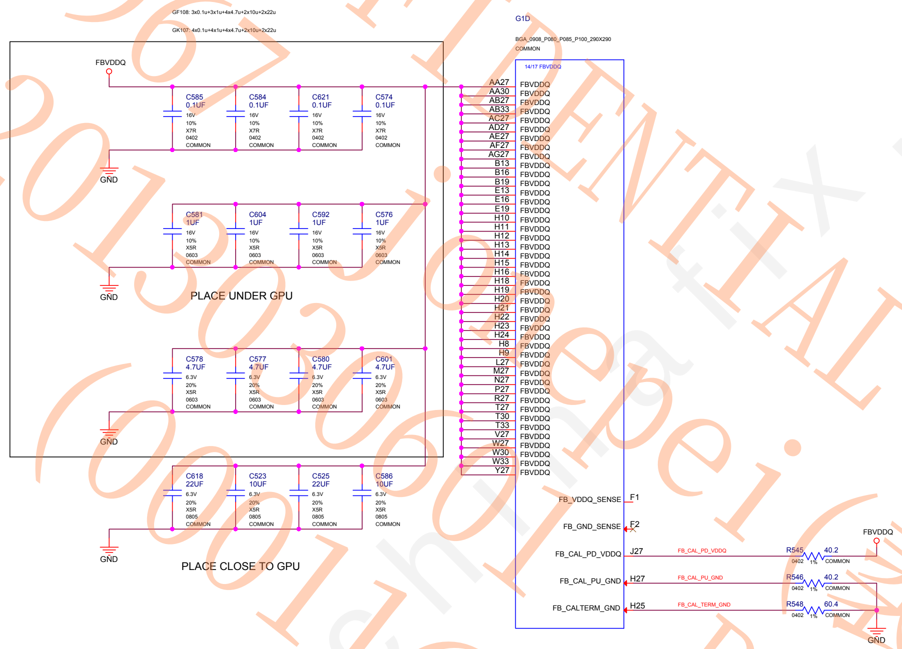
GF108: 3x0.1u+3x1u+4x4.7u+2x10u+2x22u
GK107: 4x0.1u+4x1u+4x4.7u+2x10u+2x22u
FBVDDQ
C585 0.1UF 16V 10% X7R 0402 COMMON
C584 0.1UF 16V 10% X7R 0402 COMMON
C621 0.1UF 16V 10% X7R 0402 COMMON
C574 0.1UF 16V 10% X7R 0402 COMMON
GND
C581 1UF 16V 10% X5R 0603 COMMON
C604 1UF 16V 10% X5R 0603 COMMON
C592 1UF 16V 10% X5R 0603 COMMON
C576 1UF 16V 10% X5R 0603 COMMON
GND
PLACE UNDER GPU
C578 4.7UF 6.3V 20% X5R 0603 COMMON
C577 4.7UF 6.3V 20% X5R 0603 COMMON
C580 4.7UF 6.3V 20% X5R 0603 COMMON
C601 4.7UF 6.3V 20% X5R 0603 COMMON
GND
C618 22UF 6.3V 20% X5R 0805 COMMON
C523 10UF 6.3V 20% X5R 0805 COMMON
C525 22UF 6.3V 20% X5R 0805 COMMON
C586 10UF 6.3V 20% X5R 0805 COMMON
GND
PLACE CLOSE TO GPU
G1D
BGA_0908_P080_P085_P100_290X290
COMMON
14/17 FBVDDQ
AA27 FBVDDQ
AA30 FBVDDQ
AB27 FBVDDQ
AB33 FBVDDQ
AC27 FBVDDQ
AD27 FBVDDQ
AE27 FBVDDQ
AF27 FBVDDQ
AG27 FBVDDQ
B13 FBVDDQ
B16 FBVDDQ
B19 FBVDDQ
E13 FBVDDQ
E16 FBVDDQ
E19 FBVDDQ
H10 FBVDDQ
H11 FBVDDQ
H12 FBVDDQ
H13 FBVDDQ
H14 FBVDDQ
H15 FBVDDQ
H16 FBVDDQ
H18 FBVDDQ
H19 FBVDDQ
H20 FBVDDQ
H21 FBVDDQ
H22 FBVDDQ
H23 FBVDDQ
H24 FBVDDQ
H8 FBVDDQ
H9 FBVDDQ
L27 FBVDDQ
M27 FBVDDQ
N27 FBVDDQ
P27 FBVDDQ
R27 FBVDDQ
T27 FBVDDQ
T30 FBVDDQ
T33 FBVDDQ
V27 FBVDDQ
W27 FBVDDQ
W30 FBVDDQ
W33 FBVDDQ
Y27 FBVDDQ
FB_VDDQ_SENSE F1
FB_GND_SENSE F2
FB_CAL_PD_VDDQ J27
FB_CAL_PU_GND H27
FB_CALTERM_GND H25
FB_CAL_PD_VDDQ
FB_CAL_PU_GND
FB_CAL_TERM_GND
R545 40.2 0402 1% COMMON
R546 40.2 0402 1% COMMON
R548 60.4 0402 1% COMMON
FBVDDQ
GND

MSI CONFIDENTIAL
0001796 RD(C)吳積源
20130206 (0001601) RMA工程課 (裴亮樂)

MICRO-STAR INT'L CO.,LTD

MS-V280

Size	Document Description	Rev
Custom	01_Table of Contents	1.0

Date: Tuesday, August 14, 2012 Sheet 8 of 25

DACA VGA

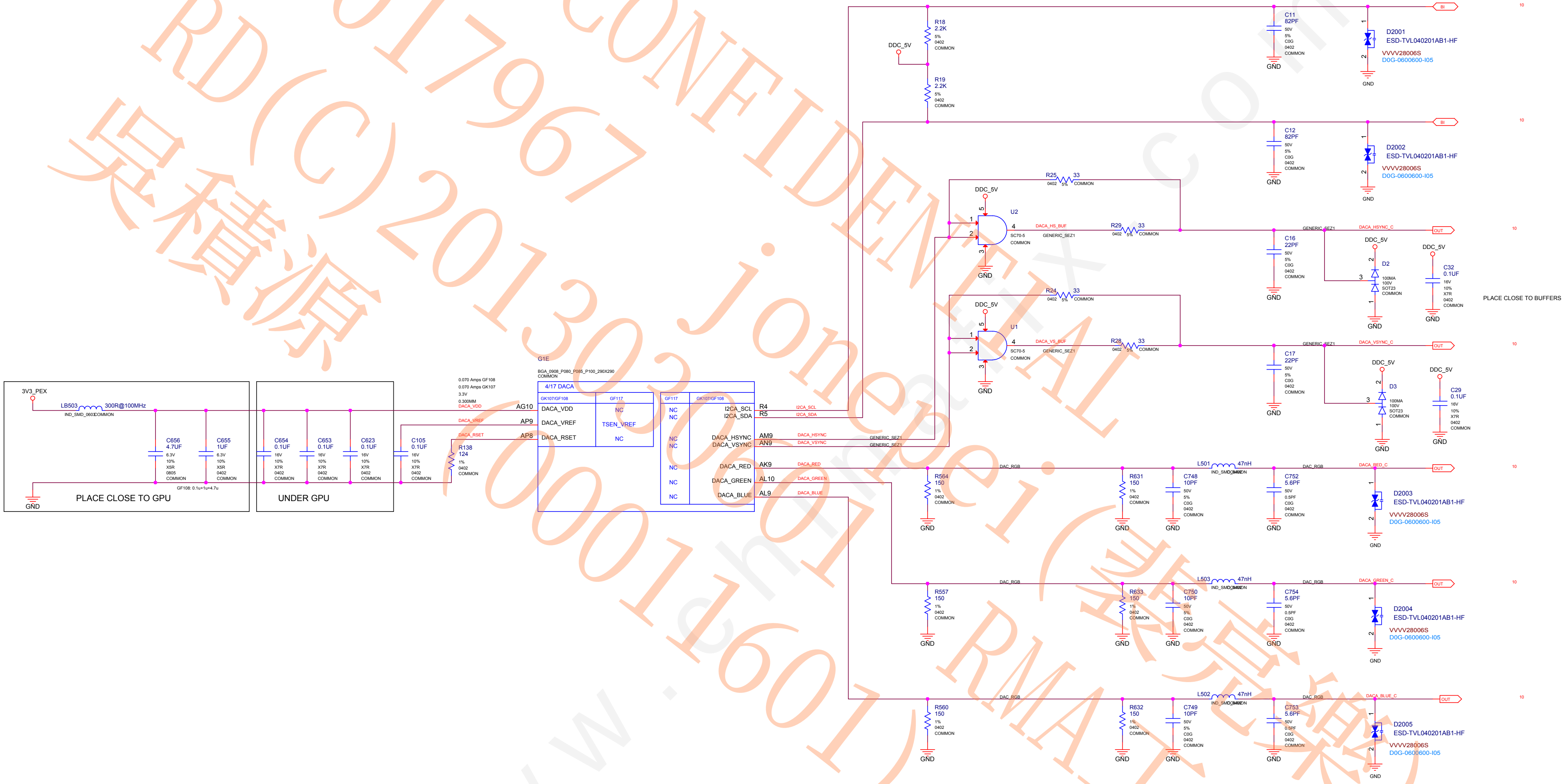

DDC_5V
R18 2.2K 5% 0402 COMMON
R19 2.2K 5% 0402 COMMON
C11 82PF 50V 5% C0G 0402 COMMON
GND
D2001 ESD-TVL040201AB1-HF
VVVV28006S
D0G-0600600-I05
BI
C12 82PF 50V 5% C0G 0402 COMMON
D2002 ESD-TVL040201AB1-HF
VVVV28006S
D0G-0600600-I05
R25 33 0402 5% COMMON
U2 SC70-5 COMMON
GENERIC_SEZ1
DACA_HS_BUF
R29 33 0402 5% COMMON
C16 22PF 50V 5% C0G 0402 COMMON
DACA_HSYNC_C
OUT
D2 100MA 100V SOT23 COMMON
C32 0.1UF 16V 10% X7R 0402 COMMON
PLACE CLOSE TO BUFFERS
R24 33 0402 5% COMMON
U1 SC70-5 COMMON
DACA_VS_BUF
R28 33 0402 5% COMMON
C17 22PF 50V 5% C0G 0402 COMMON
DACA_VSYNC_C
D3 100MA 100V SOT23 COMMON
C29 0.1UF 16V 10% X7R 0402 COMMON
3V3_PEX
LB503 300R@100MHz IND_SMD_0603 COMMON
C656 4.7UF 6.3V 10% X5R 0805 COMMON
C655 1UF 6.3V 10% X5R 0402 COMMON
PLACE CLOSE TO GPU
GF108: 0.1u+1u+4.7u
C654 0.1UF 16V 10% X7R 0402 COMMON
C653 0.1UF 16V 10% X7R 0402 COMMON
C623 0.1UF 16V 10% X7R 0402 COMMON
UNDER GPU
C105 0.1UF 16V 10% X7R 0402 COMMON
R138 124 1% 0402 COMMON
0.070 Amps GF108
0.070 Amps GK107
3.3V
0.300MM
DACA_VDD
DACA_VREF
DACA_RSET
G1E
BGA_0908_P080_P085_P100_290X290
COMMON
4/17 DACA
GK107/GF108
GF117
AG10 DACA_VDD NC
AP9 DACA_VREF TSEN_VREF
AP8 DACA_RSET NC
NC NC I2CA_SCL R4
I2CA_SDA R5
NC NC DACA_HSYNC AM9
DACA_VSYNC AN9
NC DACA_RED AK9
NC DACA_GREEN AL10
NC DACA_BLUE AL9
I2CA_SCL
I2CA_SDA
DACA_HSYNC
DACA_VSYNC
DACA_RED
DACA_GREEN
DACA_BLUE
DAC_RGB
R564 150 1% 0402 COMMON
R631 150 1% 0402 COMMON
C748 10PF 50V 5% C0G 0402 COMMON
L501 47nH IND_SMD_0402 COMMON
C752 5.6PF 50V 0.5PF C0G 0402 COMMON
DACA_RED_C
D2003 ESD-TVL040201AB1-HF
VVVV28006S
D0G-0600600-I05
R557 150 1% 0402 COMMON
R633 150 1% 0402 COMMON
C750 10PF 50V 5% C0G 0402 COMMON
L503 47nH IND_SMD_0402 COMMON
C754 5.6PF 50V 0.5PF C0G 0402 COMMON
DACA_GREEN_C
D2004 ESD-TVL040201AB1-HF
VVVV28006S
D0G-0600600-I05
R560 150 1% 0402 COMMON
R632 150 1% 0402 COMMON
C749 10PF 50V 5% C0G 0402 COMMON
L502 47nH IND_SMD_0402 COMMON
C753 5.6PF 50V 0.5PF C0G 0402 COMMON
DACA_BLUE_C
D2005 ESD-TVL040201AB1-HF
VVVV28006S
D0G-0600600-I05
10

MSI CONFIDENTIAL 0001796 RD(C)2013030601 jonebei 吳積源 (0001601) RMA工程課 www.chinafix.com

MICRO-STAR INT'L CO.,LTD

MS-V280

Size	Document Description	Rev
Custom	01_Table of Contents	1.0

Date: Tuesday, August 14, 2012 Sheet 9 of 25

IFPAB TMDS

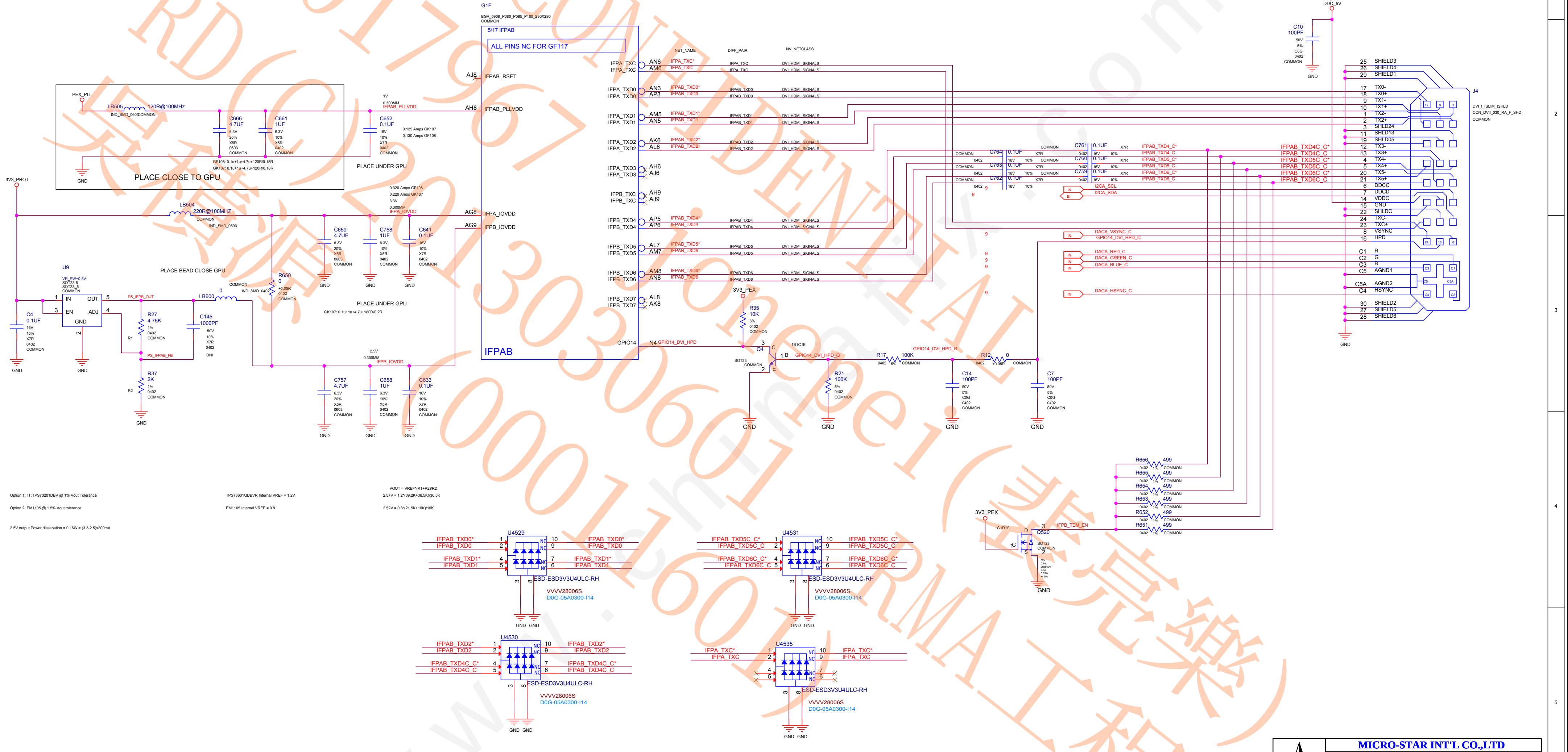

G1F
BGA_0908_P080_P085_P100_290X290
COMMON
5/17 IFPAB
ALL PINS NC FOR GF117
AJ8 IFPAB_RSET
AH8 IFPAB_PLLVDD
AG8 IFPA_IOVDD
AG9 IFPB_IOVDD
IFPAB
GPIO14
NET_NAME
DIFF_PAIR
NV_NETCLASS
IFPA_TXC AN6 IFPA_TXC* IFPA_TXC DVI_HDMI_SIGNALS
IFPA_TXC AM6 IFPA_TXC IFPA_TXC DVI_HDMI_SIGNALS
IFPA_TXD0 AN3 IFPAB_TXD0* IFPAB_TXD0 DVI_HDMI_SIGNALS
IFPA_TXD0 AP3 IFPAB_TXD0 IFPAB_TXD0 DVI_HDMI_SIGNALS
IFPA_TXD1 AM5 IFPAB_TXD1* IFPAB_TXD1 DVI_HDMI_SIGNALS
IFPA_TXD1 AN5 IFPAB_TXD1 IFPAB_TXD1 DVI_HDMI_SIGNALS
IFPA_TXD2 AK6 IFPAB_TXD2* IFPAB_TXD2 DVI_HDMI_SIGNALS
IFPA_TXD2 AL6 IFPAB_TXD2 IFPAB_TXD2 DVI_HDMI_SIGNALS
IFPA_TXD3 AH6
IFPA_TXD3 AJ6
IFPB_TXC AH9
IFPB_TXC AJ9
IFPB_TXD4 AP5 IFPAB_TXD4* IFPAB_TXD4 DVI_HDMI_SIGNALS
IFPB_TXD4 AP6 IFPAB_TXD4 IFPAB_TXD4 DVI_HDMI_SIGNALS
IFPB_TXD5 AL7 IFPAB_TXD5* IFPAB_TXD5 DVI_HDMI_SIGNALS
IFPB_TXD5 AM7 IFPAB_TXD5 IFPAB_TXD5 DVI_HDMI_SIGNALS
IFPB_TXD6 AM8 IFPAB_TXD6* IFPAB_TXD6 DVI_HDMI_SIGNALS
IFPB_TXD6 AN8 IFPAB_TXD6 IFPAB_TXD6 DVI_HDMI_SIGNALS
IFPB_TXD7 AL8
IFPB_TXD7 AK8
N4 GPIO14_DVI_HPD
PEX_PLL
LB505 120R@100MHz IND_SMD_0603 COMMON
C666 4.7UF 6.3V 20% X5R 0603 COMMON
C661 1UF 6.3V 10% X5R 0402 COMMON
C652 0.1UF 16V 10% X7R 0402 COMMON
1V 0.300MM IFPAB_PLLVDD
0.125 Amps GK107
0.130 Amps GF108
GF108: 0.1u+1u+4.7u+120R/0.18R
GK107: 0.1u+1u+4.7u+120R/0.18R
PLACE CLOSE TO GPU
PLACE UNDER GPU
GND
3V3_PROT
LB504 220R@100MHZ COMMON IND_SMD_0603
0.320 Amps GF108
0.220 Amps GK107
3.3V 0.300MM IFPA_IOVDD
C659 4.7UF 6.3V 20% X5R 0603 COMMON
C758 1UF 6.3V 10% X5R 0402 COMMON
C641 0.1UF 16V 10% X7R 0402 COMMON
PLACE BEAD CLOSE GPU
R650 0 +0.05R 0402 COMMON
LB600 0 COMMON IND_SMD_0402
PLACE UNDER GPU
GK107: 0.1u+1u+4.7u+180R/0.2R
U9 VR_SW=0.8V SOT23-5 SOT23_5 COMMON
IN OUT EN ADJ GND
PS_IFPB_OUT
PS_IFPAB_FB
C4 0.1UF 16V 10% X7R 0402 COMMON
R27 4.75K 1% 0402 COMMON R1
C145 1000PF 50V 10% X7R 0402 DNI
R37 2K 1% 0402 COMMON R2
2.5V 0.300MM IFPB_IOVDD
C757 4.7UF 6.3V 20% X5R 0603 COMMON
C658 1UF 6.3V 10% X5R 0402 COMMON
C633 0.1UF 16V 10% X7R 0402 COMMON
3V3_PEX
R35 10K 5% 0402 COMMON
Q4 SOT23 COMMON 1B1C1E
GPIO14_DVI_HPD_Q
R17 100K 0402 5% COMMON
GPIO14_DVI_HPD_R
R12 0 0402 +0.05R COMMON
R21 100K 5% 0402 COMMON
C14 100PF 50V 5% C0G 0402 COMMON
C7 100PF 50V 5% C0G 0402 COMMON
C764 0.1UF 0402 16V 10% X7R COMMON
C763 0.1UF 0402 16V 10% X7R COMMON
C762 0.1UF 0402 16V 10% X7R COMMON
C761 0.1UF 0402 16V 10% X7R COMMON
C760 0.1UF 0402 16V 10% X7R COMMON
C759 0.1UF 0402 16V 10% X7R COMMON
IFPAB_TXD4_C* IFPAB_TXD4_C IFPAB_TXD5_C* IFPAB_TXD5_C IFPAB_TXD6_C* IFPAB_TXD6_C
IFPAB_TXD4C_C* IFPAB_TXD4C_C IFPAB_TXD5C_C* IFPAB_TXD5C_C IFPAB_TXD6C_C* IFPAB_TXD6C_C
IN I2CA_SCL
BI I2CA_SDA
IN DACA_VSYNC_C
GPIO14_DVI_HPD_C
IN DACA_RED_C
IN DACA_GREEN_C
IN DACA_BLUE_C
IN DACA_HSYNC_C
DDC_5V
C10 100PF 50V 5% C0G 0402 COMMON
J4 DVI_I_(SLIM_)SHLD CON_DVII_030_RA_F_SHD COMMON
25 SHIELD3
26 SHIELD4
29 SHIELD1
17 TX0-
18 TX0+
9 TX1-
10 TX1+
1 TX2-
2 TX2+
3 SHLD24
11 SHLD13
19 SHLD05
12 TX3-
13 TX3+
4 TX4-
5 TX4+
20 TX5-
21 TX5+
6 DDCC
7 DDCD
14 VDDC
15 GND
22 SHLDC
24 TXC-
23 TXC+
8 VSYNC
16 HPD
C1 R
C2 G
C3 B
C5 AGND1
C5A AGND2
C4 HSYNC
30 SHIELD2
27 SHIELD5
28 SHIELD6
R656 499 0402 1% COMMON
R655 499 0402 1% COMMON
R654 499 0402 1% COMMON
R653 499 0402 1% COMMON
R652 499 0402 1% COMMON
R651 499 0402 1% COMMON
IFPB_TEM_EN
Q520 SOT23 COMMON 1G1D1S
60V 0.3A 2R@10V 0.8A 0.35W +/-20V
U4529 ESD-ESD3V3U4ULC-RH VVVV28006S D0G-05A0300-I14
IFPAB_TXD0* IFPAB_TXD0 IFPAB_TXD1* IFPAB_TXD1
U4531 ESD-ESD3V3U4ULC-RH VVVV28006S D0G-05A0300-I14
IFPAB_TXD5C_C* IFPAB_TXD5C_C IFPAB_TXD6C_C* IFPAB_TXD6C_C
U4530 ESD-ESD3V3U4ULC-RH VVVV28006S D0G-05A0300-I14
IFPAB_TXD2* IFPAB_TXD2 IFPAB_TXD4C_C* IFPAB_TXD4C_C
U4535 ESD-ESD3V3U4ULC-RH VVVV28006S D0G-05A0300-I14
IFPA_TXC* IFPA_TXC
NC

Option 1: TI :TPS73201DBV @ 1% Vout Tolerance

Option 2: EM1105 @ 1.5% Vout tolerance

2.5V output Power dissapation = 0.16W = (3.3-2.5)x200mA

TPS73601QDBVR Internal VREF = 1.2V

EM1105 Internal VREF = 0.8

VOUT = VREF*(R1+R2)/R2

2.57V = 1.2*(39.2K+36.5K)/36.5K

2.52V = 0.8*(21.5K+10K)/10K

MICRO-STAR INT'L CO.,LTD

MS-V280

Size	Document Description	Rev
Custom	01_Table of Contents	1.0

Date: Tuesday, August 14, 2012 Sheet 10 of 25

MSI CONFIDENTIAL 0001796797 RD(C)(2013030601) 吳樹源 lionele1(黃亮樂) RMA工程課 www.chinafix.com

IFPC mHDMI

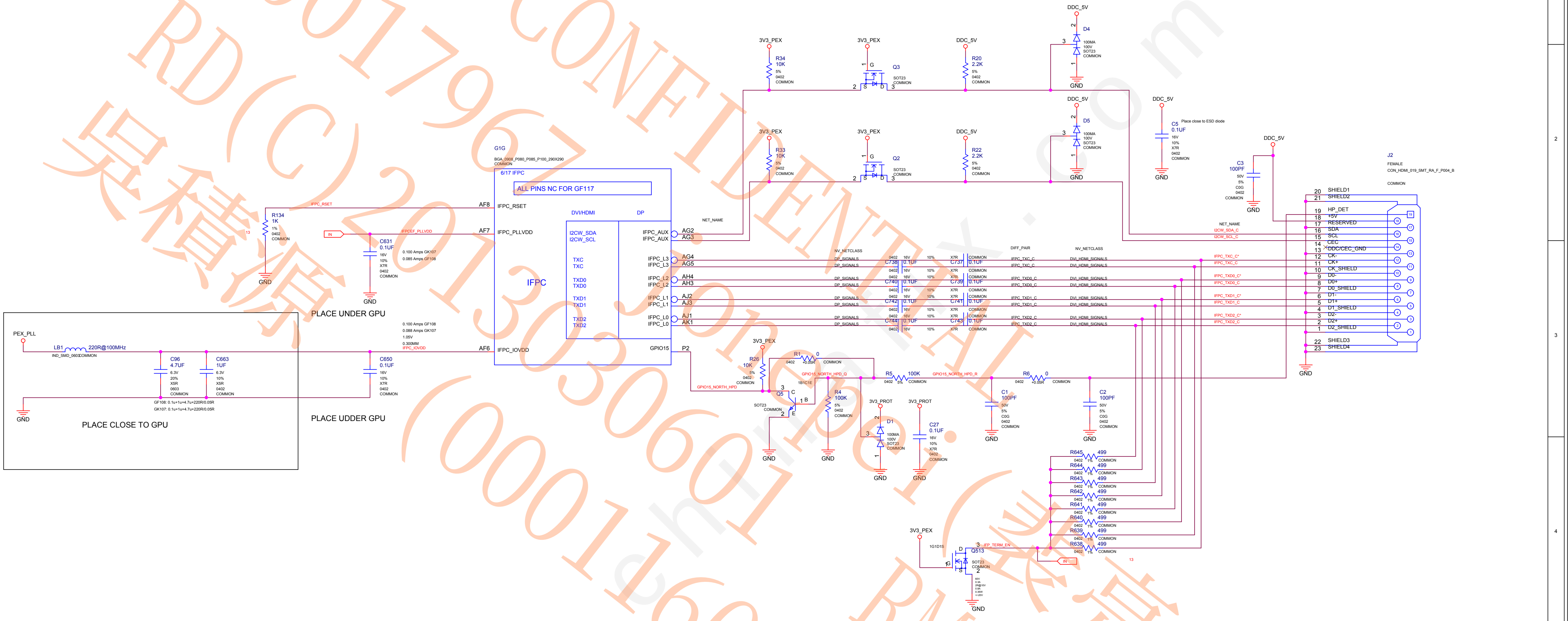

G1G
BGA_0908_P080_P085_P100_290X290
COMMON
6/17 IFPC
ALL PINS NC FOR GF117
IFPC
DVI/HDMI
DP
AF8 IFPC_RSET
AF7 IFPC_PLLVDD
AF6 IFPC_IOVDD
I2CW_SDA
I2CW_SCL
TXC
TXC
TXD0
TXD0
TXD1
TXD1
TXD2
TXD2
IFPC_AUX AG2
IFPC_AUX AG3
IFPC_L3 AG4
IFPC_L3 AG5
IFPC_L2 AH4
IFPC_L2 AH3
IFPC_L1 AJ2
IFPC_L1 AJ3
IFPC_L0 AJ1
IFPC_L0 AK1
GPIO15 P2
IFPC_RSET
R134 1K 1% 0402 COMMON
GND
IFPCEF_PLLVDD
IN
C631 0.1UF 16V 10% X7R 0402 COMMON
0.100 Amps GK107
0.085 Amps GF108
PLACE UNDER GPU
PEX_PLL
LB1 220R@100MHz
IND_SMD_0603 COMMON
C96 4.7UF 6.3V 20% X5R 0603 COMMON
C663 1UF 6.3V 10% X5R 0402 COMMON
C650 0.1UF 16V 10% X7R 0402 COMMON
0.100 Amps GF108
0.068 Amps GK107
1.05V
0.300MM
IFPC_IOVDD
GF108: 0.1u+1u+4.7u+220R/0.05R
GK107: 0.1u+1u+4.7u+220R/0.05R
PLACE CLOSE TO GPU
PLACE UDDER GPU
3V3_PEX
R34 10K 5% 0402 COMMON
R33 10K 5% 0402 COMMON
Q3 SOT23 COMMON
Q2 SOT23 COMMON
G S D
DDC_5V
R20 2.2K 5% 0402 COMMON
R22 2.2K 5% 0402 COMMON
D4 100MA 100V SOT23 COMMON
D5 100MA 100V SOT23 COMMON
C5 0.1UF 16V 10% X7R 0402 COMMON
Place close to ESD diode
C3 100PF 50V 5% C0G 0402 COMMON
NET_NAME
NV_NETCLASS
DP_SIGNALS
DIFF_PAIR
DVI_HDMI_SIGNALS
C738 0.1UF 0402 16V 10% X7R COMMON
C737 0.1UF
C740 0.1UF
C739 0.1UF
C742 0.1UF
C741 0.1UF
C744 0.1UF
C743 0.1UF
IFPC_TXC_C
IFPC_TXD0_C
IFPC_TXD1_C
IFPC_TXD2_C
IFPC_TXC_C*
IFPC_TXD0_C*
IFPC_TXD1_C*
IFPC_TXD2_C*
I2CW_SDA_C
I2CW_SCL_C
J2
FEMALE
CON_HDMI_019_SMT_RA_F_P004_B
COMMON
20 SHIELD1
21 SHIELD2
19 HP_DET
18 +5V
17 RESERVED
16 SDA
15 SCL
14 CEC
13 DDC/CEC_GND
12 CK-
11 CK+
10 CK_SHIELD
9 D0-
8 D0+
7 D0_SHIELD
6 D1-
5 D1+
4 D1_SHIELD
3 D2-
2 D2+
1 D2_SHIELD
22 SHIELD3
23 SHIELD4
R26 10K 5% 0402 COMMON
R1 0 0402 COMMON
GPIO15_NORTH_HPD_Q
GPIO15_NORTH_HPD
GPIO15_NORTH_HPD_R
Q5 SOT23 COMMON
B C E
R4 100K 5% 0402 COMMON
R5 100K 0402 COMMON
R6 0 0402 COMMON
3V3_PROT
D1 100MA 100V SOT23 COMMON
C27 0.1UF 16V 10% X7R 0402 COMMON
C1 100PF 50V 5% C0G 0402 COMMON
C2 100PF 50V 5% C0G 0402 COMMON
R645 499
R644 499
R643 499
R642 499
R641 499
R640 499
R639 499
R638 499
0402 1% COMMON
Q513
SOT23 COMMON
IFP_TERM_EN
IN
13

	MICRO-STAR INT'L CO.,LTD		
	MS-V280		
Size Custom	Document Description 01_Table of Contents		Rev 1.0
Date: Tuesday, August 14, 2012		Sheet 11 of 25	

MSI CONFIDENTIAL
RD(C)20130601 (00017962)
吳積源 (00011601)
RMA工程課
CHINAFIX

IFPC DP

remove J1

MICRO-STAR INT'L CO.,LTD		
MS-V280		
Size Custom	Document Description 01_Table of Contents	Rev 1.0
Date: Tuesday, August 14, 2012	Sheet 12 of 25	

MSI CONFIDENTIAL
00017967
RD(C)2013030601 jonepei(裴亮樂)
(00011601) RMA工程課
吳積源

IFPEF TMDS

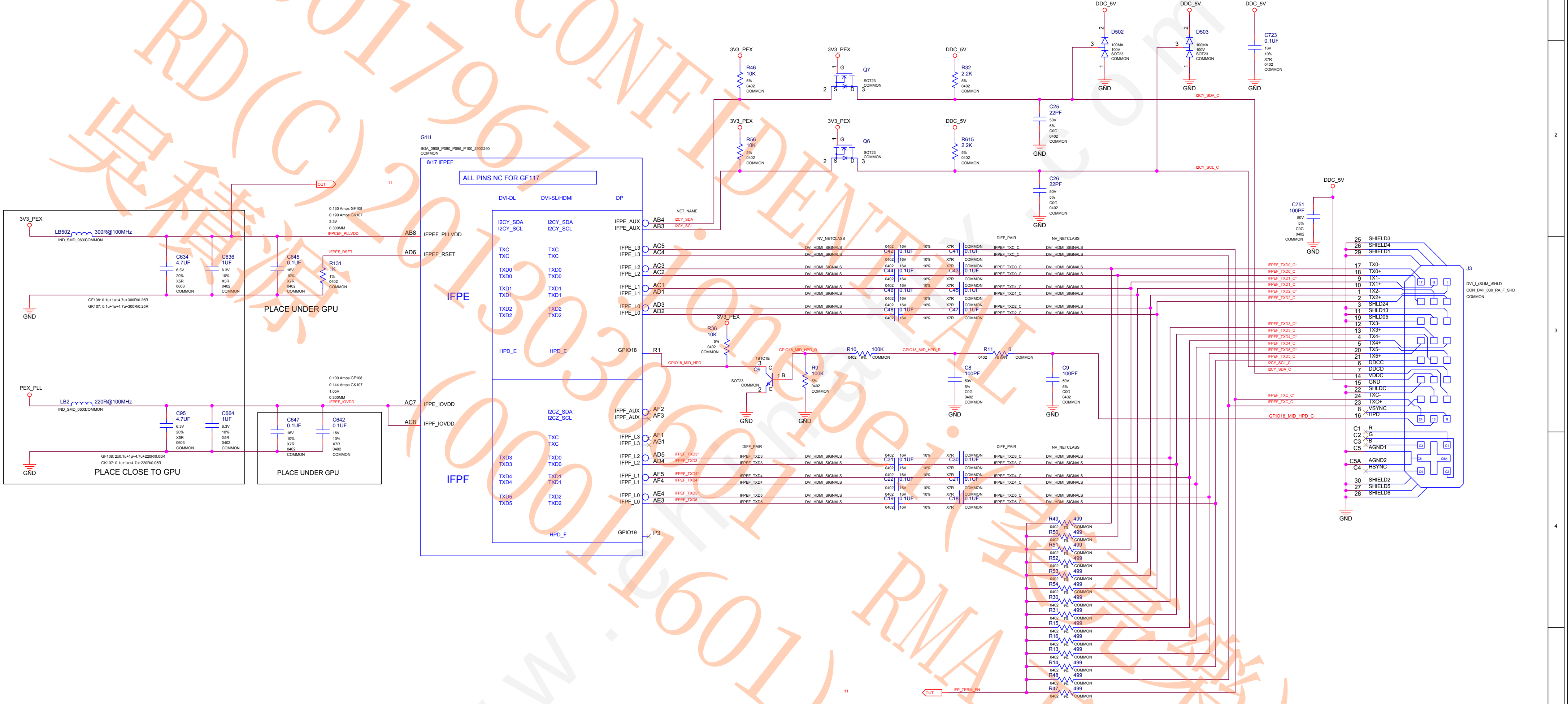

3V3_PEX
LB502 300R@100MHz
IND_SMD_0603 COMMON
C634 4.7UF 6.3V 20% X5R 0603 COMMON
C636 1UF 6.3V 10% X5R 0402 COMMON
C645 0.1UF 16V 10% X7R 0402 COMMON
R131 1K 1% 0402 COMMON
GF108: 0.1u+1u+4.7u+300R/0.25R
GK107: 0.1u+1u+4.7u+300R/0.25R
PLACE UNDER GPU
OUT
11
0.130 Amps GF108
0.190 Amps GK107
3.3V
0.300MM
IFPCEF_PLLVDD
IFPEF_RSET
PEX_PLL
LB2 220R@100MHz
IND_SMD_0603 COMMON
C95 4.7UF 6.3V 20% X5R 0603 COMMON
C664 1UF 6.3V 10% X5R 0402 COMMON
C647 0.1UF 16V 10% X7R 0402 COMMON
C642 0.1UF 16V 10% X7R 0402 COMMON
GF108: 2x0.1u+1u+4.7u+220R/0.05R
GK107: 0.1u+1u+4.7u+220R/0.05R
PLACE CLOSE TO GPU
PLACE UNDER GPU
0.100 Amps GF108
0.144 Amps GK107
1.05V
0.300MM
IFPEF_IOVDD
G1H
BGA_0908_P080_P085_P100_290X290
COMMON
8/17 IFPEF
ALL PINS NC FOR GF117
DVI-DL
DVI-SL/HDMI
DP
AB8 IFPEF_PLLVDD
AD6 IFPEF_RSET
AC7 IFPE_IOVDD
AC8 IFPF_IOVDD
IFPE
IFPF
I2CY_SDA
I2CY_SCL
TXC
TXD0
TXD1
TXD2
HPD_E
I2CZ_SDA
I2CZ_SCL
TXD3
TXD4
TXD5
HPD_F
IFPE_AUX AB4
IFPE_AUX AB3
IFPE_L3 AC5
IFPE_L3 AC4
IFPE_L2 AC3
IFPE_L2 AC2
IFPE_L1 AC1
IFPE_L1 AD1
IFPE_L0 AD3
IFPE_L0 AD2
GPIO18 R1
IFPF_AUX AF2
IFPF_AUX AF3
IFPF_L3 AF1
IFPF_L3 AG1
IFPF_L2 AD5
IFPF_L2 AD4
IFPF_L1 AF5
IFPF_L1 AF4
IFPF_L0 AE4
IFPF_L0 AE3
GPIO19 P3
NET_NAME
I2CY_SDA
I2CY_SCL
3V3_PEX
R46 10K 5% 0402 COMMON
R56 10K 5% 0402 COMMON
Q7 SOT23 COMMON
Q6 SOT23 COMMON
G S D
DDC_5V
R32 2.2K 5% 0402 COMMON
R615 2.2K 5% 0402 COMMON
C25 22PF 50V 5% C0G 0402 COMMON
C26 22PF 50V 5% C0G 0402 COMMON
D502 100MA 100V SOT23 COMMON
D503 100MA 100V SOT23 COMMON
C723 0.1UF 16V 10% X7R 0402 COMMON
I2CY_SDA_C
I2CY_SCL_C
GND
NV_NETCLASS
DVI_HDMI_SIGNALS
DIFF_PAIR
C42 0.1UF 0402 16V 10%
C41 0.1UF X7R COMMON
C44 0.1UF
C43 0.1UF
C46 0.1UF
C45 0.1UF
C48 0.1UF
C47 0.1UF
IFPEF_TXC_C
IFPEF_TXD0_C
IFPEF_TXD1_C
IFPEF_TXD2_C
R36 10K 5% 0402 COMMON
GPIO18_MID_HPD
1B1C1E
Q9 SOT23 COMMON
C B E
GPIO18_MID_HPD_Q
R9 100K 5% 0402 COMMON
R10 100K 0402 5% COMMON
GPIO18_MID_HPD_R
R11 0 0402 +0.05R COMMON
C8 100PF 50V 5% C0G 0402 COMMON
C9 100PF 50V 5% C0G 0402 COMMON
IFPEF_TXD3*
IFPEF_TXD3
IFPEF_TXD4*
IFPEF_TXD4
IFPEF_TXD5*
IFPEF_TXD5
C31 0.1UF
C30 0.1UF
C22 0.1UF
C21 0.1UF
C19 0.1UF
C18 0.1UF
IFPEF_TXD3_C
IFPEF_TXD4_C
IFPEF_TXD5_C
R49 499
R50 499
R51 499
R52 499
R53 499
R54 499
R30 499
R31 499
R15 499
R16 499
R13 499
R14 499
R48 499
R47 499
0402 1% COMMON
IFP_TERM_EN
OUT
11
DDC_5V
C751 100PF 50V 5% C0G 0402 COMMON
IFPEF_TXD0_C*
IFPEF_TXD1_C*
IFPEF_TXD2_C*
IFPEF_TXD3_C*
IFPEF_TXD4_C*
IFPEF_TXD5_C*
IFPEF_TXC_C*
GPIO18_MID_HPD_C
J3
DVI_I_(SLIM_)SHLD
CON_DVII_030_RA_F_SHD
COMMON
25 SHIELD3
26 SHIELD4
29 SHIELD1
17 TX0-
18 TX0+
9 TX1-
10 TX1+
1 TX2-
2 TX2+
3 SHLD24
11 SHLD13
19 SHLD05
12 TX3-
13 TX3+
4 TX4-
5 TX4+
20 TX5-
21 TX5+
6 DDCC
7 DDCD
14 VDDC
15 GND
22 SHLDC
24 TXC-
23 TXC+
8 VSYNC
16 HPD
C1 R
C2 G
C3 B
C5 AGND1
C5A AGND2
C4 HSYNC
30 SHIELD2
27 SHIELD5
28 SHIELD6

MICRO-STAR INT'L CO.,LTD

MS-V280

Size: Custom
Document Description: 01_Table of Contents
Rev: 1.0
Date: Tuesday, August 14, 2012
Sheet 13 of 25

IFPE Long HDMI

remove J5

MSI CONFIDENTIAL
00017967 jonepei(裴亮樂)
RD(C)2013030601 RMA工程課
吳積源(00011601)

MICRO-STAR INT'L CO.,LTD

MS-V280

Size
Custom

Document Description
01_Table of Contents

Rev
1.0

Date: Tuesday, August 14, 2012

Sheet 14 of 25

Core Decoupling,GPU_VDD_3V3

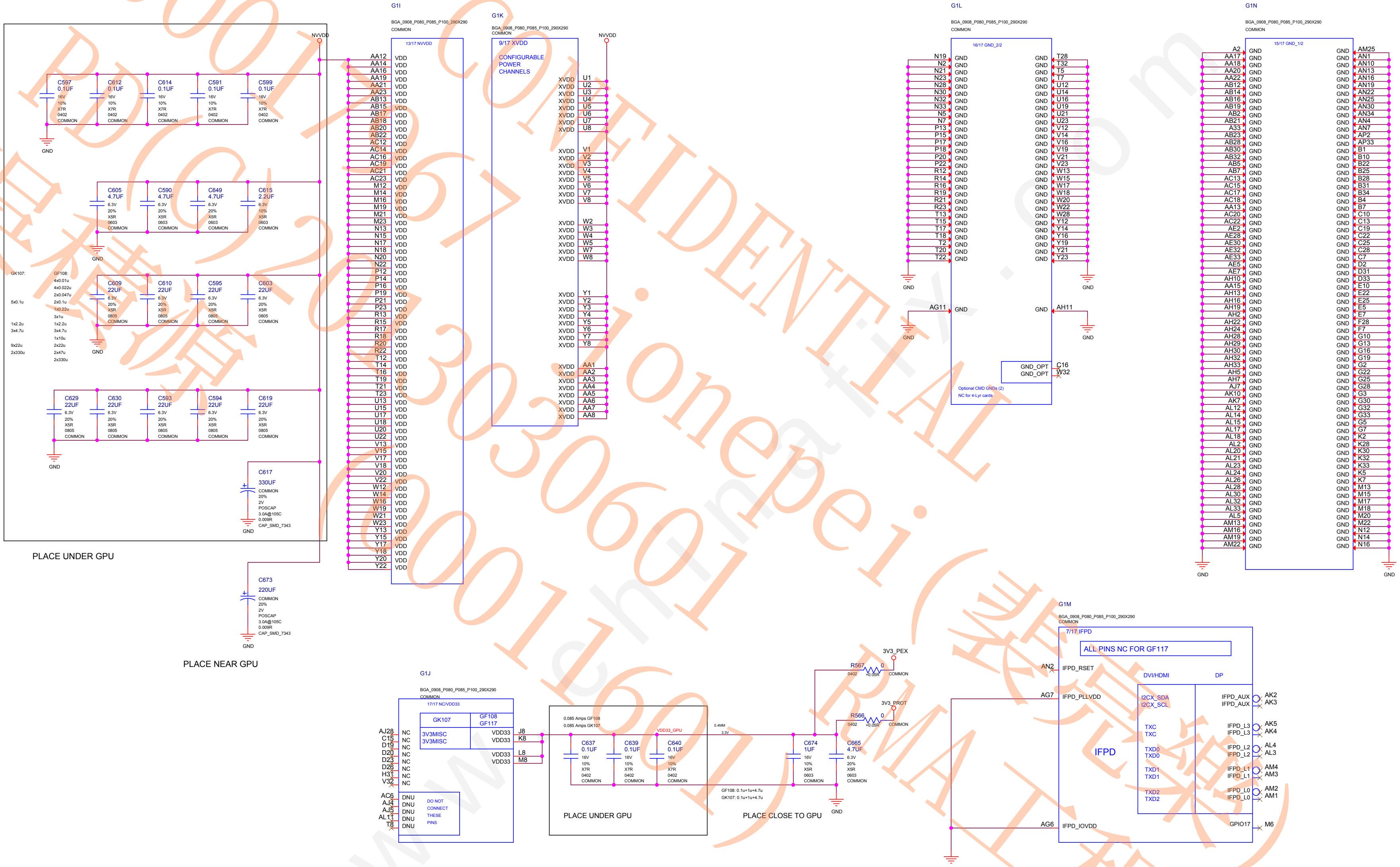
NVVDD
C597 0.1UF 16V 10% X7R 0402 COMMON
C612 0.1UF 16V 10% X7R 0402 COMMON
C614 0.1UF 16V 10% X7R 0402 COMMON
C591 0.1UF 16V 10% X7R 0402 COMMON
C599 0.1UF 16V 10% X7R 0402 COMMON
GND
C605 4.7UF 6.3V 20% X5R 0603 COMMON
C590 4.7UF 6.3V 20% X5R 0603 COMMON
C649 4.7UF 6.3V 20% X5R 0603 COMMON
C615 2.2UF 6.3V 10% X5R 0603 COMMON
GND
GK107:
5x0.1u
1x2.2u
3x4.7u
9x22u
2x330u
GF108:
4x0.01u
4x0.022u
2x0.047u
2x0.1u
1x0.22u
3x1u
1x2.2u
3x4.7u
1x10u
2x22u
2x47u
2x330u
C609 22UF 6.3V 20% X5R 0805 COMMON
C610 22UF 6.3V 20% X5R 0805 COMMON
C595 22UF 6.3V 20% X5R 0805 COMMON
C603 22UF 6.3V 20% X5R 0805 COMMON
GND
C629 22UF 6.3V 20% X5R 0805 COMMON
C630 22UF 6.3V 20% X5R 0805 COMMON
C593 22UF 6.3V 20% X5R 0805 COMMON
C594 22UF 6.3V 20% X5R 0805 COMMON
C619 22UF 6.3V 20% X5R 0805 COMMON
GND
C617 330UF COMMON 20% 2V POSCAP 3.0A@105C 0.009R CAP_SMD_7343
GND
PLACE UNDER GPU
C673 220UF COMMON 20% 2V POSCAP 3.0A@105C 0.009R CAP_SMD_7343
GND
PLACE NEAR GPU
G1I
BGA_0908_P080_P085_P100_290X290
COMMON
13/17 NVVDD
AA12 VDD
AA14 VDD
AA16 VDD
AA19 VDD
AA21 VDD
AA23 VDD
AB13 VDD
AB15 VDD
AB17 VDD
AB18 VDD
AB20 VDD
AB22 VDD
AC12 VDD
AC14 VDD
AC16 VDD
AC19 VDD
AC21 VDD
AC23 VDD
M12 VDD
M14 VDD
M16 VDD
M19 VDD
M21 VDD
M23 VDD
N13 VDD
N15 VDD
N17 VDD
N18 VDD
N20 VDD
N22 VDD
P12 VDD
P14 VDD
P16 VDD
P19 VDD
P21 VDD
P23 VDD
R13 VDD
R15 VDD
R17 VDD
R18 VDD
R20 VDD
R22 VDD
T12 VDD
T14 VDD
T16 VDD
T19 VDD
T21 VDD
T23 VDD
U13 VDD
U15 VDD
U17 VDD
U18 VDD
U20 VDD
U22 VDD
V13 VDD
V15 VDD
V17 VDD
V18 VDD
V20 VDD
V22 VDD
W12 VDD
W14 VDD
W16 VDD
W19 VDD
W21 VDD
W23 VDD
Y13 VDD
Y15 VDD
Y17 VDD
Y18 VDD
Y20 VDD
Y22 VDD
G1K
BGA_0908_P080_P085_P100_290X290
COMMON
9/17 XVDD
CONFIGURABLE POWER CHANNELS
NVVDD
XVDD U1
XVDD U2
XVDD U3
XVDD U4
XVDD U5
XVDD U6
XVDD U7
XVDD U8
XVDD V1
XVDD V2
XVDD V3
XVDD V4
XVDD V5
XVDD V6
XVDD V7
XVDD V8
XVDD W2
XVDD W3
XVDD W4
XVDD W5
XVDD W7
XVDD W8
XVDD Y1
XVDD Y2
XVDD Y3
XVDD Y4
XVDD Y5
XVDD Y6
XVDD Y7
XVDD Y8
XVDD AA1
XVDD AA2
XVDD AA3
XVDD AA4
XVDD AA5
XVDD AA6
XVDD AA7
XVDD AA8
G1L
BGA_0908_P080_P085_P100_290X290
COMMON
16/17 GND_2/2
N19 GND
N2 GND
N21 GND
N23 GND
N28 GND
N30 GND
N32 GND
N33 GND
N5 GND
N7 GND
P13 GND
P15 GND
P17 GND
P18 GND
P20 GND
P22 GND
R12 GND
R14 GND
R16 GND
R19 GND
R21 GND
R23 GND
T13 GND
T15 GND
T17 GND
T18 GND
T2 GND
T20 GND
T22 GND
GND T28
GND T32
GND T5
GND T7
GND U12
GND U14
GND U16
GND U19
GND U21
GND U23
GND V12
GND V14
GND V16
GND V19
GND V21
GND V23
GND W13
GND W15
GND W17
GND W18
GND W20
GND W22
GND W28
GND Y12
GND Y14
GND Y16
GND Y19
GND Y21
GND Y23
GND
AG11 GND
GND AH11
GND
GND_OPT C16
GND_OPT W32
Optional CMD GNDs (2)
NC for 4-Lyr cards
G1N
BGA_0908_P080_P085_P100_290X290
COMMON
15/17 GND_1/2
A2 GND
AA17 GND
AA18 GND
AA20 GND
AA22 GND
AB12 GND
AB14 GND
AB16 GND
AB19 GND
AB2 GND
AB21 GND
A33 GND
AB23 GND
AB28 GND
AB30 GND
AB32 GND
AB5 GND
AB7 GND
AC13 GND
AC15 GND
AC17 GND
AC18 GND
AA13 GND
AC20 GND
AC22 GND
AE2 GND
AE28 GND
AE30 GND
AE32 GND
AE33 GND
AE5 GND
AE7 GND
AH10 GND
AA15 GND
AH13 GND
AH16 GND
AH19 GND
AH2 GND
AH22 GND
AH24 GND
AH28 GND
AH29 GND
AH30 GND
AH32 GND
AH33 GND
AH5 GND
AH7 GND
AJ7 GND
AK10 GND
AK7 GND
AL12 GND
AL14 GND
AL15 GND
AL17 GND
AL18 GND
AL2 GND
AL20 GND
AL21 GND
AL23 GND
AL24 GND
AL26 GND
AL28 GND
AL30 GND
AL32 GND
AL33 GND
AL5 GND
AM13 GND
AM16 GND
AM19 GND
AM22 GND
GND AM25
GND AN1
GND AN10
GND AN13
GND AN16
GND AN19
GND AN22
GND AN25
GND AN30
GND AN34
GND AN4
GND AN7
GND AP2
GND AP33
GND B1
GND B10
GND B22
GND B25
GND B28
GND B31
GND B34
GND B4
GND B7
GND C10
GND C13
GND C19
GND C22
GND C25
GND C28
GND C7
GND D2
GND D31
GND D33
GND E10
GND E22
GND E25
GND E5
GND E7
GND F28
GND F7
GND G10
GND G13
GND G16
GND G19
GND G2
GND G22
GND G25
GND G28
GND G3
GND G30
GND G32
GND G33
GND G5
GND G7
GND K2
GND K28
GND K30
GND K32
GND K33
GND K5
GND K7
GND M13
GND M15
GND M17
GND M18
GND M20
GND M22
GND N12
GND N14
GND N16
GND
GND
G1J
BGA_0908_P080_P085_P100_290X290
COMMON
17/17 NC/VDD33
GK107
GF108
GF117
3V3MISC VDD33 J8
3V3MISC VDD33 K8
VDD33 L8
VDD33 M8
AJ28 NC
C15 NC
D19 NC
D20 NC
D23 NC
D26 NC
H31 NC
V32 NC
AC6 DNU
AJ4 DNU
AJ5 DNU
AL11 DNU
T8 DNU
DO NOT CONNECT THESE PINS
0.085 Amps GF108
0.085 Amps GK107
VDD33_GPU
0.4MM
3.3V
C637 0.1UF 16V 10% X7R 0402 COMMON
C639 0.1UF 16V 10% X7R 0402 COMMON
C640 0.1UF 16V 10% X7R 0402 COMMON
PLACE UNDER GPU
C674 1UF 16V 10% X5R 0603 COMMON
C665 4.7UF 6.3V 20% X5R 0603 COMMON
GF108: 0.1u+1u+4.7u
GK107: 0.1u+1u+4.7u
PLACE CLOSE TO GPU
GND
3V3_PEX
R567 0 0402 +0.05R COMMON
3V3_PROT
R566 0 0402 +0.05R COMMON
G1M
BGA_0908_P080_P085_P100_290X290
COMMON
7/17 IFPD
ALL PINS NC FOR GF117
AN2 IFPD_RSET
AG7 IFPD_PLLVDD
AG6 IFPD_IOVDD
GND
IFPD
DVI/HDMI
DP
I2CX_SDA
I2CX_SCL
TXC
TXC
TXD0
TXD0
TXD1
TXD1
TXD2
TXD2
IFPD_AUX AK2
IFPD_AUX AK3
IFPD_L3 AK5
IFPD_L3 AK4
IFPD_L2 AL4
IFPD_L2 AL3
IFPD_L1 AM4
IFPD_L1 AM3
IFPD_L0 AM2
IFPD_L0 AM1
GPIO17 M6

MSI 0001767 CONFIDENTIAL

MICRO-STAR INT'L CO.,LTD

MS-V280

Size	Document Description	Rev
Custom	01_Table of Contents	1.0

Date: Tuesday, August 14, 2012 Sheet 15 of 25

Misc Interfaces

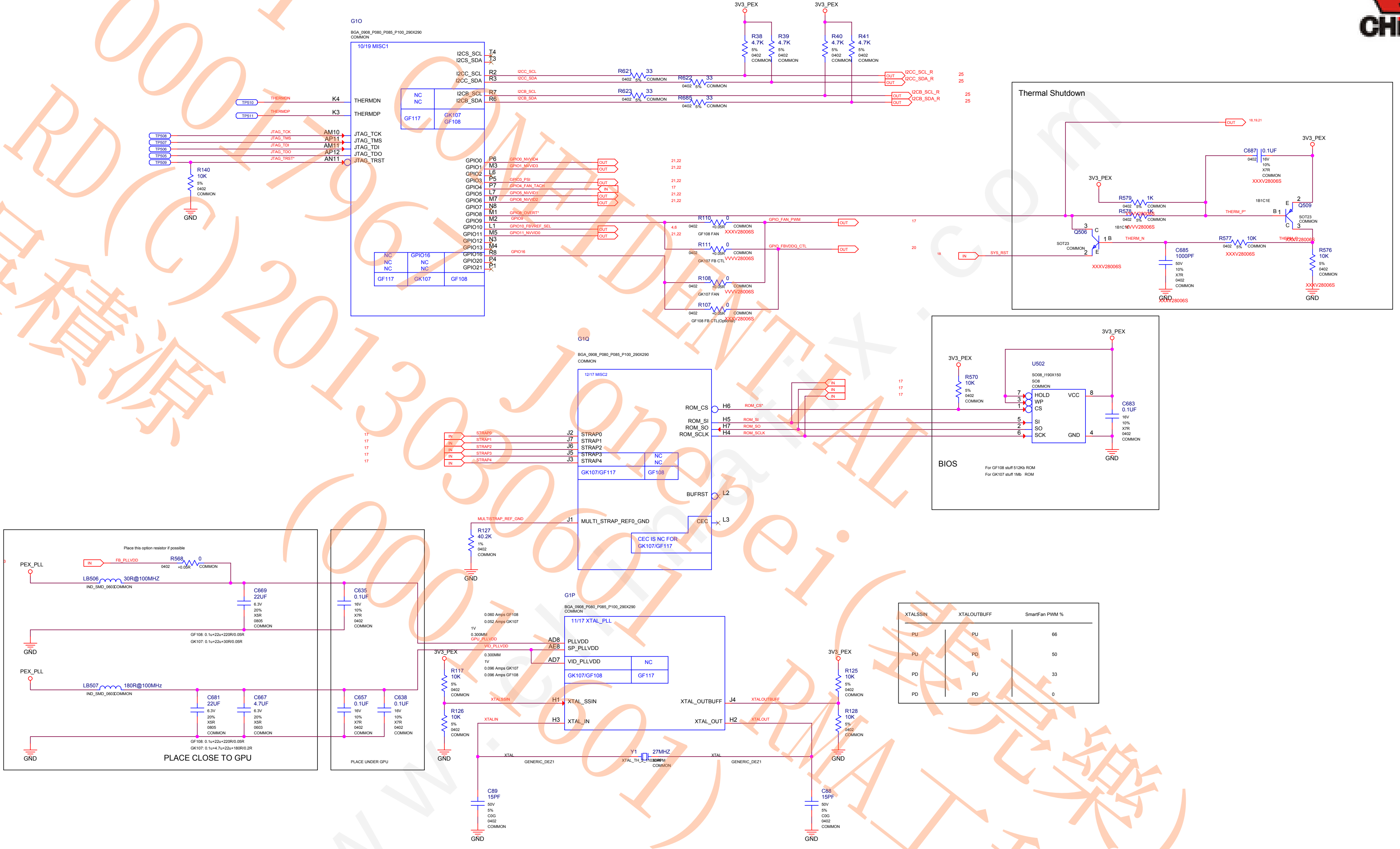
G1O
BGA_0908_P080_P085_P100_290X290
COMMON
10/19 MISC1
I2CS_SCL T4
I2CS_SDA T3
I2CC_SCL R2
I2CC_SDA R3
I2CB_SCL R7
I2CB_SDA R6
NC
NC
GF117
GK107
GF108
THERMDN K4
THERMDP K3
TP510
TP511
THERMDN
THERMDP
TP508
TP507
TP506
TP505
TP509
JTAG_TCK AM10
JTAG_TMS AP11
JTAG_TDI AM11
JTAG_TDO AP12
JTAG_TRST* AN11
R140
10K
5%
0402
COMMON
GND
GPIO0 P6
GPIO1 M3
GPIO2 L6
GPIO3 P5
GPIO4 P7
GPIO5 L7
GPIO6 M7
GPIO7 N8
GPIO8 M1
GPIO9 M2
GPIO10 L1
GPIO11 M5
GPIO12 N3
GPIO13 M4
GPIO16 R8
GPIO20 P4
GPIO21 P1
GPIO16
GPIO0_NVVID4
GPIO1_NVVID3
GPIO3_PSI
GPIO4_FAN_TACH
GPIO5_NVVID1
GPIO6_NVVID2
GPIO8_OVERT*
GPIO9
GPIO10_FBVREF_SEL
GPIO11_NVVID0
OUT
IN
21,22
17
4,6
3V3_PEX
R38 4.7K
R39 4.7K
R40 4.7K
R41 4.7K
R621 33
R622 33
R623 33
R685 33
I2CC_SCL_R
I2CC_SDA_R
I2CB_SCL_R
I2CB_SDA_R
25
R110 0
GF108 FAN
R111 0
GK107 FB CTL
R108 0
GK107 FAN
R107 0
GF108 FB CTL(Optional)
+0.05R
XXXV28006S
VVVV28006S
GPIO_FAN_PWM
GPIO_FBVDDQ_CTL
20
18
SYS_RST
Thermal Shutdown
18,19,21
C687 0.1UF
16V
10%
X7R
R579 1K
R578 1K
1B1C1E
THERM_P*
THERM_N
THERM_P
Q506
Q509
SOT23
B
C
E
C685 1000PF
50V
R577 10K
R576 10K
G1Q
12/17 MISC2
ROM_CS H6
ROM_SI H5
ROM_SO H7
ROM_SCLK H4
ROM_CS*
STRAP0 J2
STRAP1 J7
STRAP2 J6
STRAP3 J5
STRAP4 J3
GK107/GF117
BUFRST L2
CEC L3
MULTI_STRAP_REF0_GND J1
MULTISTRAP_REF_GND
CEC IS NC FOR GK107/GF117
R127 40.2K
1%
BIOS
U502
SO08_I190X150
SO8
HOLD
WP
CS
SI
SO
SCK
VCC
GND
R570 10K
C683 0.1UF
For GF108 stuff 512Kb ROM
For GK107 stuff 1Mb ROM
Place this option resistor if possible
PEX_PLL
FB_PLLVDD
R568 0
LB506 30R@100MHZ
IND_SMD_0603
C669 22UF
6.3V
20%
X5R
0805
C635 0.1UF
GF108: 0.1u+22u+220R/0.05R
GK107: 0.1u+22u+30R/0.05R
LB507 180R@100MHz
C681 22UF
C667 4.7UF
0603
C657 0.1UF
C638 0.1UF
GF108: 0.1u+22u+220R/0.05R
GK107: 0.1u+4.7u+22u+180R/0.2R
PLACE CLOSE TO GPU
PLACE UNDER GPU
G1P
11/17 XTAL_PLL
0.060 Amps GF108
0.052 Amps GK107
1V
0.300MM
GPU_PLLVDD
VID_PLLVDD
PLLVDD AD8
SP_PLLVDD AE8
VID_PLLVDD AD7
0.096 Amps GK107
0.096 Amps GF108
NC
GK107/GF108
GF117
R117 10K
R126 10K
XTALSSIN
XTAL_SSIN H1
XTALIN
XTAL_IN H3
XTAL_OUTBUFF J4
XTAL_OUT H2
XTALOUTBUFF
XTALOUT
R125 10K
R128 10K
Y1 27MHZ
XTAL_TH_2_110X046
30PPM
XTAL
GENERIC_DEZ1
C89 15PF
C88 15PF
C0G

XTALSSIN	XTALOUTBUFF	SmartFan PWM %
PU	PU	66
PU	PD	50
PD	PU	33
PD	PD	0

MICRO-STAR INT'L CO.,LTD

MS-V280

Size	Document Description	Rev
Custom	01_Table of Contents	1.0

Date: Tuesday, August 14, 2012 Sheet 16 of 25

MSI 0001796 RD(C)2013 吳積源
CONFIDENTIAL
Jonepei(000)1601)
(蒙亮樂) RMA工程課

Straps, Thermal, Mechanical

Remove 2-WIRE FAN

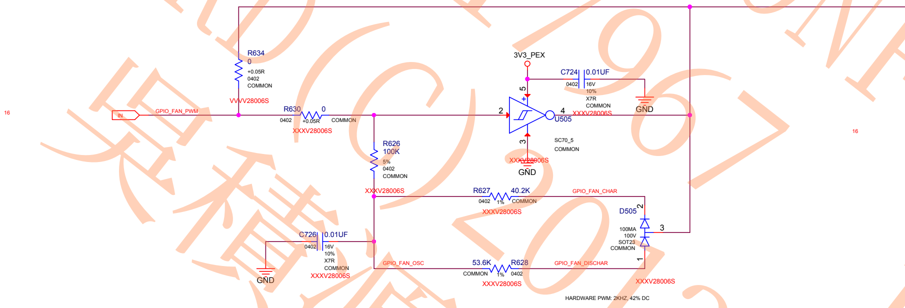
16
IN
GPIO_FAN_PWM
R634
0
+0.05R
0402
COMMON
VVVV28006S
R630
0
0402
+0.05R
COMMON
XXXV28006S
3V3_PEX
C724
0.01UF
0402
16V
10%
X7R
COMMON
XXXV28006S
GND
U505
SC70_5
COMMON
XXXV28006S
GND
R626
100K
5%
0402
COMMON
XXXV28006S
R627
40.2K
0402
1%
COMMON
XXXV28006S
GPIO_FAN_CHAR
D505
100MA
100V
SOT23
COMMON
C726
0.01UF
0402
16V
10%
X7R
COMMON
XXXV28006S
GND
GPIO_FAN_OSC
53.6K
R628
COMMON
1%
0402
XXXV28006S
GPIO_FAN_DISCHAR
XXXV28006S
HARDWARE PWM: 2KHZ, 42% DC

4-WIRE FAN

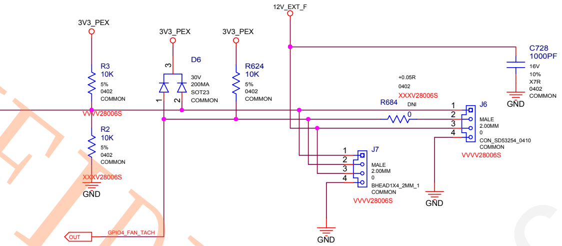
3V3_PEX
R3
10K
5%
0402
COMMON
VVVV28006S
R2
10K
5%
0402
COMMON
XXXV28006S
GND
3V3_PEX
D6
30V
200MA
SOT23
COMMON
3V3_PEX
R624
10K
5%
0402
COMMON
16
OUT
GPIO4_FAN_TACH
12V_EXT_F
C728
1000PF
16V
10%
X7R
0402
COMMON
GND
+0.05R
0402
XXXV28006S
R684
DNI
0
J6
MALE
2.00MM
0
CON_SD53254_0410
COMMON
VVVV28006S
GND
J7
MALE
2.00MM
0
BHEAD1X4_2MM_1
COMMON
VVVV28006S
GND

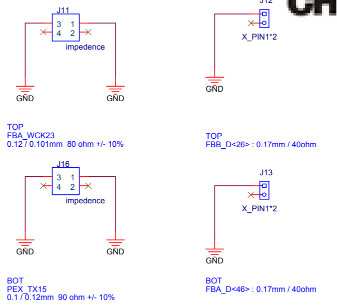
J11
impedence
GND
GND
TOP
FBA_WCK23
0.12 / 0.101mm 80 ohm +/- 10%
J12
X_PIN1*2
GND
TOP
FBB_D<26> : 0.17mm / 40ohm
J16
impedence
GND
GND
BOT
PEX_TX15
0.1 / 0.12mm 90 ohm +/- 10%
J13
X_PIN1*2
GND
BOT
FBA_D<46> : 0.17mm / 40ohm

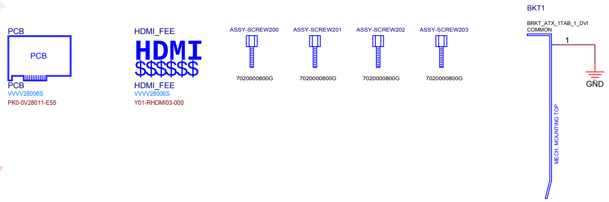
PCB
PCB
PCB
VVVV28006S
PK0-0V28011-E55
HDMI_FEE
HDMI
$$$$$$
HDMI_FEE
VVVV28006S
Y01-RHDMI03-000
ASSY-SCREW200
7020000800G
ASSY-SCREW201
7020000800G
ASSY-SCREW202
7020000800G
ASSY-SCREW203
7020000800G
BKT1
BRKT_ATX_1TAB_1_DVI
COMMON
GND
MECH. MOUNTING TOP

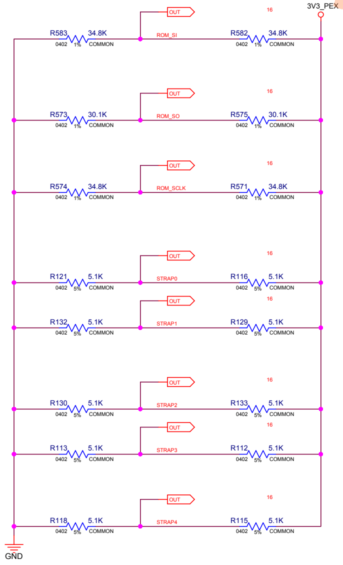
3V3_PEX
OUT
16
R583
34.8K
0402 1% COMMON
ROM_SI
R582
34.8K
0402 1% COMMON
R573
30.1K
0402 1% COMMON
ROM_SO
R575
30.1K
0402 1% COMMON
R574
34.8K
0402 1% COMMON
ROM_SCLK
R571
34.8K
0402 1% COMMON
R121
5.1K
0402 5% COMMON
STRAP0
R116
5.1K
0402 5% COMMON
R132
5.1K
0402 5% COMMON
STRAP1
R129
5.1K
0402 5% COMMON
R130
5.1K
0402 5% COMMON
STRAP2
R133
5.1K
0402 5% COMMON
R113
5.1K
0402 5% COMMON
STRAP3
R112
5.1K
0402 5% COMMON
R118
5.1K
0402 5% COMMON
STRAP4
R115
5.1K
0402 5% COMMON
GND

GK107 Straps

Bit Signal		Values			
03:	RAMCFG[3]	0000	64Mx16 128bit	1000	64Mx16 64bit
		0001	64Mx16 128bit Micron	1001	64Mx16 64bit Micron
02:	RAMCFG[2]	0010	64Mx16 128bit Hynix	1010	64Mx16 64bit Hynix
		0011	64Mx16 128bit Samsung	1011	64Mx16 64bit Samsung
01:	RAMCFG[1]	0100	128Mx16 128bit	1100	128Mx16 64bit
		0101	128Mx16 128bit Micron	1101	128Mx16 64bit Micron
00:	RAMCFG[0]	0110	128Mx16 128bit Hynix	1110	128Mx16 64bit Hynix
		0111	128Mx16 128bit Samsung	1111	128Mx16 64bit Samsung
03:	FB[1]	01	128MB		
02:	FB[0]				
01:	SMB_ALT_ADDR	0	DISABLED	1	ENABLED
00:	VGA_DEVICE	0	DISABLED	1	ENABLED
03:	PCI_DEVID_EXT	0	INIT		
02:	SUB_VENDOR	0	NO_BIOS	1	BIOS
01:	PCI_DEVID_EXT_BIT5	0	INIT		
00:	PEX_PLL_EN_TERM100	0	DISABLED	1	ENABLED
03:	USER[3]	0000	INIT		
02:	USER[2]				
01:	USER[1]				
00:	USER[0]				
03:	3GIO_PADCFG_LUT_ADR[3]	0000	DSKTOP_DEFAULT	1000	DSKTOP_HTHRS
		0001	MOBILE_DEFAULT	1001	MOBILE_HTHRS_NAMP
02:	3GIO_PADCFG_LUT_ADR[2]	0010	MOBILE_NTHRS_LLAMP	1010	MOBILE_HTHRS_LLAMP
		0011	MOBILE_NTHRS_LAMP	1011	MOBILE_HTHRS_LAMP
01:	3GIO_PADCFG_LUT_ADR[1]	0100	MOBILE_NTHRS_HAMP	1100	MOBILE_HTHRS_HAMP
		0101	MOBILE_NTHRS_HHAMP	1101	MOBILE_HTHRS_HHAMP
00:	3GIO_PADCFG_LUT_ADR[0]	0110	MOBILE_NTHRS_HHHAMP	1110	MOBILE_HTHRS_HHHAMP
		0111	MOBILE_NTHRS_HHHHAMP	1111	MOBILE_HTHRS_HHHHAMP
03:	PCI_DEVID[3]	0000	GK107-400-A1		
02:	PCI_DEVID[2]	0110	GK107-450-A1		
01:	PCI_DEVID[1]				
00:	PCI_DEVID[0]				
03:	SOR3_EXPOSED	0	DISABLED	1	ENABLED
02:	SOR2_EXPOSED	0	DISABLED	1	ENABLED
01:	SOR1_EXPOSED	0	DISABLED	1	ENABLED
00:	SOR0_EXPOSED	0	DISABLED	1	ENABLED
02:	PCIE_SPEED_CHANGE_GEN3	0	DISABLED	1	ENABLED
01:	PCIE_MAX_SPEED	0	GEN1	1	GEN23
00:	DP_PLL_VDD_3V3	0	USE1V8	1	USE3V3

GF108 Straps

Bit Signal		Values			
03:	RAMCFG[3]	0000	64Mx16 128bit	1000	64Mx16 64bit
		0001	64Mx16 128bit Micron	1001	64Mx16 64bit Micron
02:	RAMCFG[2]	0010	64Mx16 128bit Hynix	1010	64Mx16 64bit Hynix
		0011	64Mx16 128bit Samsung	1011	64Mx16 64bit Samsung
01:	RAMCFG[1]	0100	128Mx16 128bit	1100	128Mx16 64bit
		0101	128Mx16 128bit Micron	1101	128Mx16 64bit Micron
00:	RAMCFG[0]	0110	128Mx16 128bit Hynix	1110	128Mx16 64bit Hynix
		0111	128Mx16 128bit Samsung	1111	128Mx16 64bit Samsung
03:	XCLK_417	0	DISABLED	1	ENABLED
02:	FB[0]	1	128MB		
01:	SMB_ALT_ADDR	0	DISABLED	1	ENABLED
00:	VGA_DEVICE	0	DISABLED	1	ENABLED
03:	PCI_DEVID_EXT	0	GF108-450-A1		
02:	SUB_VENDOR	0	NO_BIOS	1	BIOS
01:	SLOT_CLK_CFG	0	DISABLED	1	ENABLED
00:	PEX_PLL_EN_TERM100	0	DISABLED	1	ENABLED
03:	USER[3]	0000	INIT		
02:	USER[2]				
01:	USER[1]				
00:	USER[0]				
03:	3GIO_PADCFG_LUT_ADR[3]	0000	DSKTOP_DEFAULT	1000	DSKTOP_HTHRS
		0001	MOBILE_DEFAULT	1001	MOBILE_HTHRS_NAMP
02:	3GIO_PADCFG_LUT_ADR[2]	0010	MOBILE_NTHRS_LLAMP	1010	MOBILE_HTHRS_LLAMP
		0011	MOBILE_NTHRS_LAMP	1011	MOBILE_HTHRS_LAMP
01:	3GIO_PADCFG_LUT_ADR[1]	0100	MOBILE_NTHRS_HAMP	1100	MOBILE_HTHRS_HAMP
		0101	MOBILE_NTHRS_HHAMP	1101	MOBILE_HTHRS_HHAMP
00:	3GIO_PADCFG_LUT_ADR[0]	0110	MOBILE_NTHRS_HHHAMP	1110	MOBILE_HTHRS_HHHAMP
		0111	MOBILE_NTHRS_HHHHAMP	1111	MOBILE_HTHRS_HHHHAMP
03:	PCI_DEVID[3]	1	GF108-450-A1		
02:	PCI_DEVID[2]				
01:	PCI_DEVID[1]				
00:	PCI_DEVID[0]				

Multilevel Straps

0000	5.1K to GND	1000	5.1K to VCC
0001	10K to GND	1001	10K to VCC
0010	15K to GND	1010	15K to VCC
0011	20K to GND	1011	20K to VCC
0100	24.9K to GND	1100	24.9K to VCC
0101	30.1K to GND	1101	30.1K to VCC
0110	34.8K to GND	1110	34.8K to VCC
0111	45.3K to GND	1111	45.3K to VCC

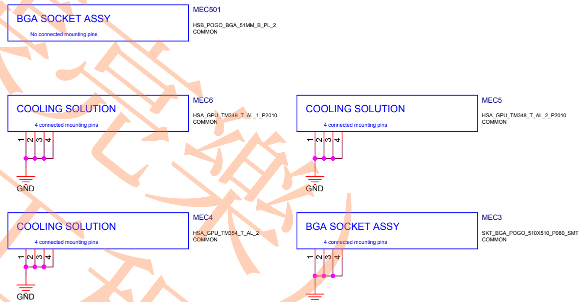
BGA SOCKET ASSY
No connected mounting pins
MEC501
HSB_POGO_BGA_51MM_B_PL_2
COMMON
COOLING SOLUTION
4 connected mounting pins
MEC6
HSA_GPU_TM349_T_AL_1_P2010
COMMON
GND
COOLING SOLUTION
4 connected mounting pins
MEC5
HSA_GPU_TM348_T_AL_2_P2010
COMMON
GND
COOLING SOLUTION
4 connected mounting pins
MEC4
HSA_GPU_TM354_T_AL_2
COMMON
GND
BGA SOCKET ASSY
4 connected mounting pins
MEC3
SKT_BGA_POGO_510X510_P080_SMT
COMMON

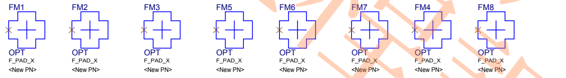
FM1
OPT
F_PAD_X
<New PN>
FM2
OPT
F_PAD_X
<New PN>
FM3
OPT
F_PAD_X
<New PN>
FM5
OPT
F_PAD_X
<New PN>
FM6
OPT
F_PAD_X
<New PN>
FM7
OPT
F_PAD_X
<New PN>
FM4
OPT
F_PAD_X
<New PN>
FM8
OPT
F_PAD_X
<New PN>

MICRO-STAR INT'L CO.,LTD
MS-V280
Size: Custom
Document Description: 01_Table of Contents
Rev: 1.0
Date: Tuesday, August 14, 2012
Sheet 17 of 25

MSI 00017967 CONFIDENTIAL
RD(C)20130601 Jonepei(00011601)
吳積源 RMA工程課(裴亮樂)
CHINAFIX

Power Supply I: Misc Power

Remove U501

PEX_VDD = 1.05V @ 1.7A (GF108)
PEX_VDD = 1.05V @ 3.3A (GK107)

	VCNTL range
315-0615-000: GS7105NV (2A) 2%	3.0~5.5V
315-0614-000: GS7103NV (3A) 2%	3.0~5.5V
315-0612-000: EM5103 (3A) 1.5%	3.0~5.5V
315-0610-000: EM5102AGE (2A) 3%	3.0~5.5V

Vout = 0.8V * (1+Rt/Rb)
1.00V = 0.8V * (1+2.55k/10.2k)
1.05V = 0.8V * (1+3.65k/11.5k)

Remove U503

315-0610-000: EM5102AGE (2A) 3%
315-0615-000: GS7105NV (2A) 2%
315-0614-000: GS7103NV (3A) 2%

PEX_PLL = 1.05V @ 500mA (GF108)
PEX_PLL = 1.05V @ 537mA (GK107)

Vout = 0.8V * (1+Rt/Rb)
1.00V = 0.8V * (1+2.55k/10.2k)
1.05V = 0.8V * (1+3.65k/11.5k)

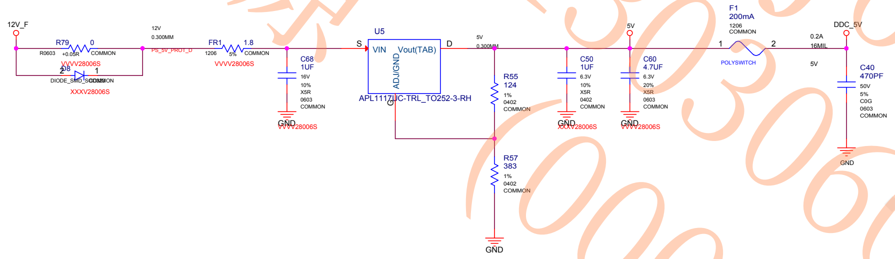
12V_F
R79
0
R0603
+0.05R
COMMON
VVVV28006S
D8
2
1
DIODE_SMD_SOD123
COMMON
XXXV28006S
12V
0.300MM
PS_5V_PROT_D
FR1
1.8
1206
5%
COMMON
VVVV28006S
C68
1UF
16V
10%
X5R
0603
COMMON
GND
VVVV28006S
U5
S
VIN
Vout(TAB)
ADJ/GND
D
APL1117UC-TRL_TO252-3-RH
5V
0.300MM
R55
124
1%
0402
COMMON
R57
383
1%
0402
COMMON
GND
5V
C50
1UF
6.3V
10%
X5R
0402
COMMON
GND
XXXV28006S
C60
4.7UF
6.3V
20%
X5R
0603
COMMON
GND
VVVV28006S
F1
200mA
1206
COMMON
1
2
POLYSWITCH
0.2A
16MIL
5V
DDC_5V
C40
470PF
50V
5%
C0G
0603
COMMON
GND

Vref=1.256V
Vo_Typ=1.256*(1+383/124)+60uA*383=5.16V

5V = 5V @ 165mA

Remove U3

3V3_FUSE = 3.3V @ 500mA

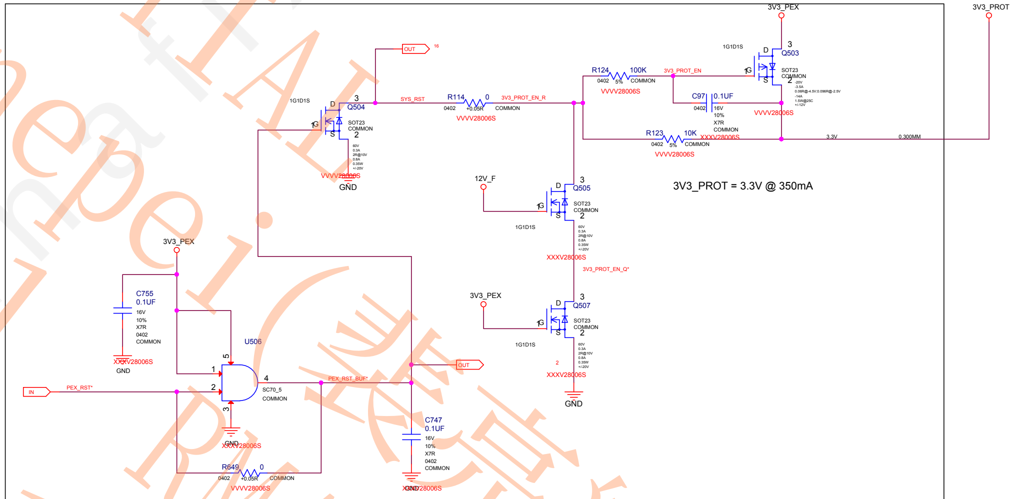
OUT
16
1G1D1S
D
3
Q504
1G
S
2
SOT23
COMMON
60V
0.3A
2R@10V
0.8A
0.35W
+/-20V
VVVV28006S
GND
SYS_RST
R114
0
0402
+0.05R
COMMON
VVVV28006S
3V3_PROT_EN_R
R124
100K
0402
5%
COMMON
VVVV28006S
3V3_PROT_EN
C97
0.1UF
0402
16V
10%
X7R
COMMON
VVVV28006S
R123
10K
0402
5%
COMMON
VVVV28006S
XXXV28006S
3V3_PEX
1G1D1S
D
3
Q503
1G
S
2
SOT23
COMMON
-20V
-3.5A
0.06R@-4.5V;0.096R@-2.5V
-14A
1.5W@25C
+/-12V
3.3V
0.300MM
3V3_PROT
12V_F
D
3
Q505
1G
S
2
SOT23
COMMON
1G1D1S
60V
0.3A
2R@10V
0.8A
0.35W
+/-20V
XXXV28006S
3V3_PROT_EN_Q*
3V3_PEX
D
3
Q507
1G
S
2
SOT23
COMMON
1G1D1S
60V
0.3A
2R@10V
0.8A
0.35W
+/-20V
2
XXXV28006S
GND
3V3_PEX
C755
0.1UF
16V
10%
X7R
0402
COMMON
XXXV28006S
GND
U506
5
1
2
3
4
SC70_5
COMMON
GND
XXXV28006S
IN
PEX_RST*
PEX_RST_BUF*
OUT
R649
0
0402
+0.05R
COMMON
VVVV28006S
C747
0.1UF
16V
10%
X7R
0402
COMMON
GND
XXXV28006S

3V3_PROT = 3.3V @ 350mA

MICRO-STAR INT'L CO.,LTD
MS-V280
Size: Custom
Document Description: 01_Table of Contents
Rev: 1.0
Date: Tuesday, August 14, 2012
Sheet 18 of 25

Power Supply II: PEX_VDD

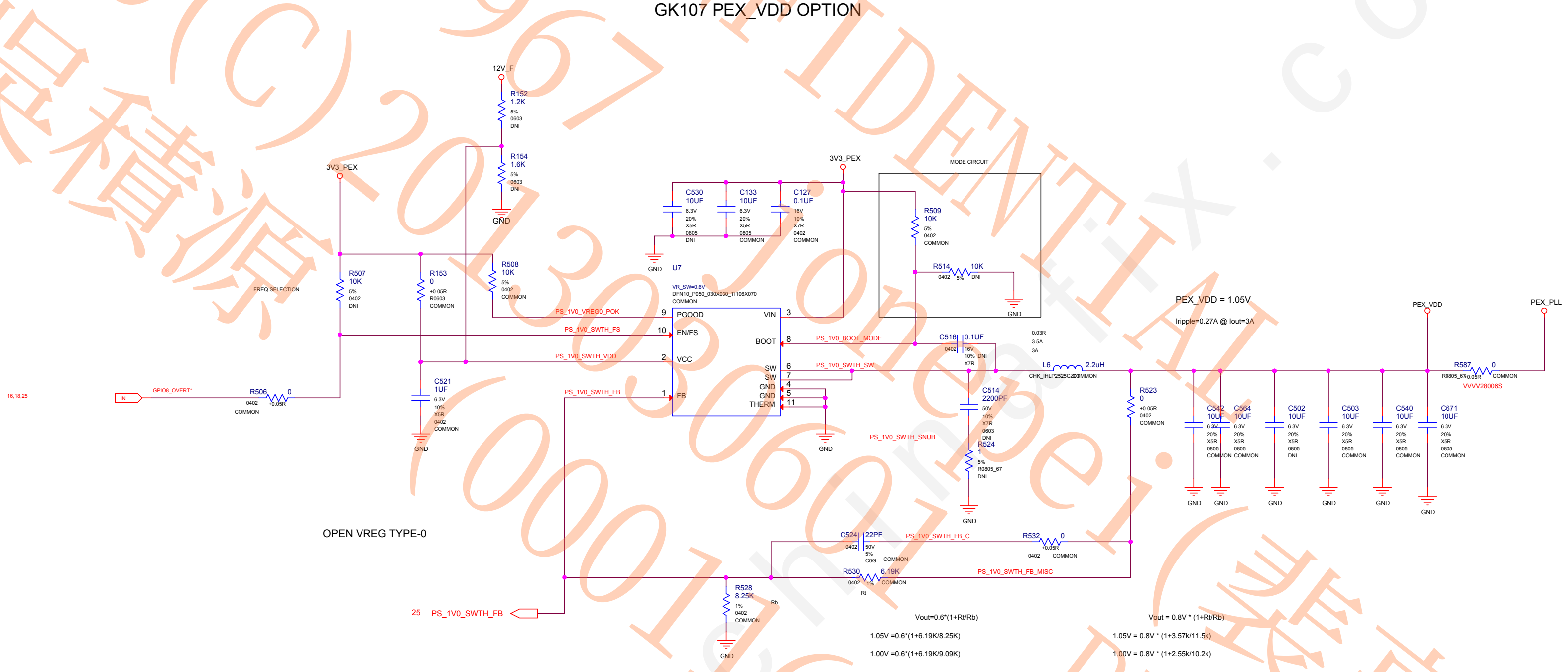
GK107 PEX_VDD OPTION
12V_F
R152
1.2K
5%
0603
DNI
R154
1.6K
5%
0603
DNI
GND
3V3_PEX
FREQ SELECTION
R507
10K
5%
0402
DNI
R153
0
+0.05R
R0603
COMMON
R508
10K
5%
0402
COMMON
16,18,25
IN
GPIO8_OVERT*
R506
0
0402
+0.05R
COMMON
C521
1UF
6.3V
10%
X5R
0402
COMMON
GND
C530
10UF
6.3V
20%
X5R
0805
DNI
C133
10UF
6.3V
20%
X5R
0805
COMMON
C127
0.1UF
16V
10%
X7R
0402
COMMON
GND
U7
VR_SW=0.6V
DFN10_P050_030X030_TI106X070
COMMON
PS_1V0_VREG0_POK
PS_1V0_SWTH_FS
PS_1V0_SWTH_VDD
PS_1V0_SWTH_FB
9
10
2
1
PGOOD
EN/FS
VCC
FB
VIN
BOOT
SW
SW
GND
GND
THERM
3
8
6
7
4
5
11
GND
3V3_PEX
MODE CIRCUIT
R509
10K
5%
0402
COMMON
R514
10K
0402
5%
DNI
GND
PS_1V0_BOOT_MODE
PS_1V0_SWTH_SW
C516
0.1UF
0402
16V
10%
DNI
X7R
PS_1V0_SWTH_SNUB
C514
2200PF
50V
10%
X7R
0603
DNI
R524
1
5%
R0805_67
DNI
GND
0.03R
3.5A
3A
L6
2.2uH
CHK_IHLP2525CZ
COMMON
R523
0
+0.05R
0402
COMMON
PEX_VDD = 1.05V
Iripple=0.27A @ Iout=3A
C542
10UF
6.3V
20%
X5R
0805
COMMON
C564
10UF
6.3V
20%
X5R
0805
COMMON
C502
10UF
6.3V
20%
X5R
0805
DNI
C503
10UF
6.3V
20%
X5R
0805
COMMON
C540
10UF
6.3V
20%
X5R
0805
COMMON
C671
10UF
6.3V
20%
X5R
0805
COMMON
GND
PEX_VDD
PEX_PLL
R587
0
R0805_67
+0.05R
COMMON
VVVV28006S
OPEN VREG TYPE-0
C524
22PF
0402
50V
5%
C0G
COMMON
PS_1V0_SWTH_FB_C
R532
0
+0.05R
0402
COMMON
R530
6.19K
0402
1%
COMMON
Rt
PS_1V0_SWTH_FB_MISC
R528
8.25K
1%
0402
COMMON
Rb
GND
25
PS_1V0_SWTH_FB

Vout=0.6*(1+Rt/Rb)

1.05V =0.6*(1+6.19K/8.25K)

1.00V =0.6*(1+6.19K/9.09K)

Vout = 0.8V * (1+Rt/Rb)

1.05V = 0.8V * (1+3.57k/11.5k)

1.00V = 0.8V * (1+2.55k/10.2k)

MICRO-STAR INT'L CO.,LTD

MS-V280

Size	Document Description	Rev
Custom	01_Table of Contents	1.0

Date: Tuesday, August 14, 2012 Sheet 19 of 25

MSI CONFIDENTIAL
RD(C)20130306 00017967
吳積源(00014601)
RMA工程課(裴亮樂)

FBVDDQ

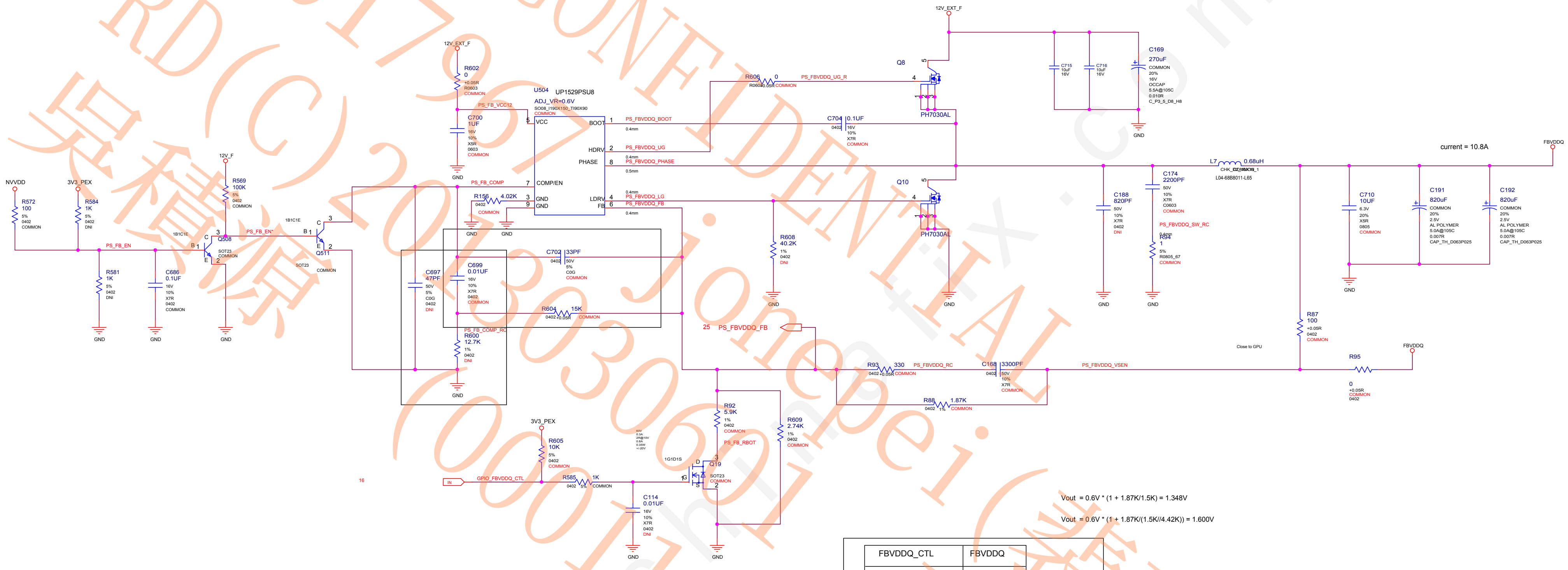
12V_EXT_F
12V_EXT_F
12V_F
NVVDD
3V3_PEX
3V3_PEX
R572 100 5% 0402 COMMON
R584 1K 5% 0402 DNI
R569 100K 5% 0402 COMMON
R581 1K 5% 0402 DNI
C686 0.1UF 16V 10% X7R 0402 COMMON
Q508 SOT23 COMMON
Q511 SOT23 COMMON
1B1C1E
PS_FB_EN
PS_FB_EN*
R602 0 +0.05R R0603 COMMON
C700 1UF 16V 10% X5R 0603 COMMON
PS_FB_VCC12
U504 UP1529PSU8
ADJ_VR=0.6V
SO08_I190X150_TI90X90
COMMON
VCC
BOOT
HDRV
PHASE
COMP/EN
GND
GND
LDRV
FB
PS_FB_COMP
R156 4.02K 0402 COMMON
C697 47PF 50V 5% C0G 0402 DNI
C699 0.01UF 16V 10% X7R 0402 COMMON
C702 33PF 0402 50V 5% C0G COMMON
R604 15K 0402 +0.05R COMMON
PS_FB_COMP_RC
R600 12.7K 1% 0402 DNI
PS_FBVDDQ_BOOT
PS_FBVDDQ_UG
PS_FBVDDQ_PHASE
PS_FBVDDQ_LG
PS_FBVDDQ_FB
0.4mm
0.5mm
R606 0 R0603 +0.05R COMMON
PS_FBVDDQ_UG_R
Q8 PH7030AL
Q10 PH7030AL
C704 0.1UF 0402 16V 10% X7R COMMON
C715 10uF 16V
C716 10uF 16V
C169 270uF COMMON 20% 16V OCCAP 5.5A@105C 0.010R C_P3_5_D8_H8
R608 40.2K 1% 0402 DNI
L7 0.68uH
L04-68B8011-L65
C174 2200PF 50V 10% X7R C0603 COMMON
C188 820PF 50V 10% X7R 0402 DNI
PS_FBVDDQ_SW_RC
R94 1 5% R0805_67 COMMON
current = 10.8A
FBVDDQ
C710 10UF 6.3V 20% X5R 0805 COMMON
C191 820uF COMMON 20% 2.5V AL POLYMER 5.0A@105C 0.007R CAP_TH_D083P025
C192 820uF COMMON 20% 2.5V AL POLYMER 5.0A@105C 0.007R CAP_TH_D083P025
R87 100 +0.05R 0402 COMMON
Close to GPU
25 PS_FBVDDQ_FB
R93 330 0402 +0.05R COMMON
PS_FBVDDQ_RC
C168 3300PF 0402 50V 10% X7R COMMON
PS_FBVDDQ_VSEN
R88 1.87K 0402 1% COMMON
R95 0 +0.05R COMMON 0402
FBVDDQ
R92 5.9K 1% 0402 COMMON
PS_FB_RBOT
R609 2.74K 1% 0402 COMMON
Q19 SOT23 COMMON
1G1D1S
R605 10K 5% 0402 COMMON
16
IN
GPIO_FBVDDQ_CTL
R585 1K 0402 5% COMMON
C114 0.01UF 16V 10% X7R 0402 DNI
GND

Vout = 0.6V * (1 + 1.87K/1.5K) = 1.348V

Vout = 0.6V * (1 + 1.87K/(1.5K//4.42K)) = 1.600V

FBVDDQ_CTL	FBVDDQ	
0	1.35V	
1	1.5V	<= DEFAULT

MICRO-STAR INT'L CO.,LTD

MS-V280

Size	Document Description	Rev
Custom	01_Table of Contents	1.0

Date: Tuesday, August 14, 2012 Sheet 20 of 25

MSI 00017967 CONFIDENTIAL RD(C) 201303060 吳積源 (00011601) Jonepei (蔡亮樂) RMA工程課 www.chinafix.com

PS: NVVDD Controller, VID

VID Table

GPIO4 VID_5	GPIO3 VID_4	GPIO2 VID_3	GPIO1 VID_2	GPIO0 VID_1	VOUT
0	0	0	0	0	1.2125V
0	0	0	0	1	1.2000V
0	0	0	1	0	1.1875V
0	0	0	1	1	1.1750V
0	0	1	0	0	1.1625V
0	0	1	0	1	1.1500V
0	0	1	1	0	1.1375V
0	0	1	1	1	1.1250V
0	1	0	0	0	1.1125V
0	1	0	0	1	1.1000V
0	1	0	1	0	1.0875V
0	1	0	1	1	1.0750V
0	1	1	0	0	1.0625V
0	1	1	0	1	1.0500V
0	1	1	1	0	1.0375V
0	1	1	1	1	1.0250V
1	0	0	0	0	1.0125V
1	0	0	0	1	1.0000V
1	0	0	1	0	0.9875V
1	0	0	1	1	0.9750V
1	0	1	0	0	0.9625V
1	0	1	0	1	0.9500V
1	0	1	1	0	0.9375V
1	0	1	1	1	0.9250V
1	1	0	0	0	0.9125V
1	1	0	0	1	0.9000V
1	1	0	1	0	0.8875V
1	1	0	1	1	0.8750V
1	1	1	0	0	0.8625V
1	1	1	0	1	0.8500V
1	1	1	1	0	0.8375V
1	1	1	1	1	0.8250V

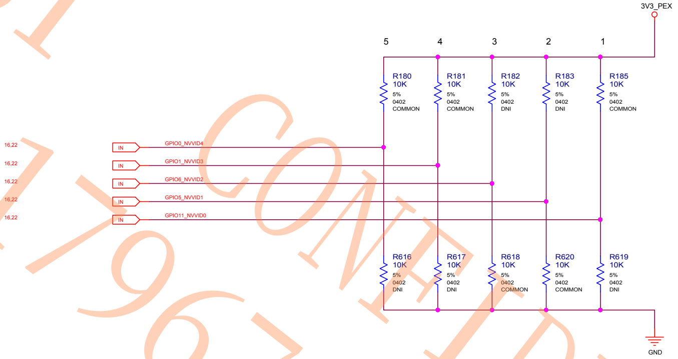
3V3_PEX
5
4
3
2
1
R180 10K 5% 0402 COMMON
R181 10K 5% 0402 COMMON
R182 10K 5% 0402 DNI
R183 10K 5% 0402 DNI
R185 10K 5% 0402 COMMON
16,22 IN GPIO0_NVVID4
16,22 IN GPIO1_NVVID3
16,22 IN GPIO6_NVVID2
16,22 IN GPIO5_NVVID1
16,22 IN GPIO11_NVVID0
R616 10K 5% 0402 DNI
R617 10K 5% 0402 DNI
R618 10K 5% 0402 COMMON
R620 10K 5% 0402 COMMON
R619 10K 5% 0402 DNI
GND

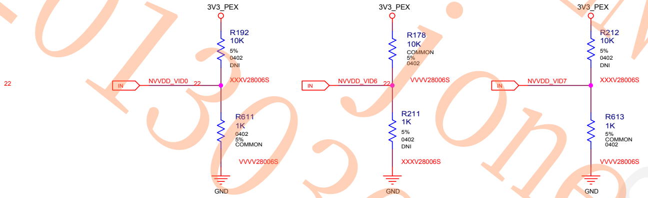
22
3V3_PEX
R192 10K 5% 0402 DNI
IN NVVDD_VID0 22
XXXV28006S
R611 1K 0402 5% COMMON
VVVV28006S
GND
3V3_PEX
R178 10K COMMON 5% 0402
IN NVVDD_VID6 22
VVVV28006S
R211 1K 5% 0402 DNI
XXXV28006S
GND
3V3_PEX
R212 10K 5% 0402 DNI
IN NVVDD_VID7
XXXV28006S
R613 1K 5% COMMON 0402
VVVV28006S
GND

PEX Input - Power Level/PSI* Control

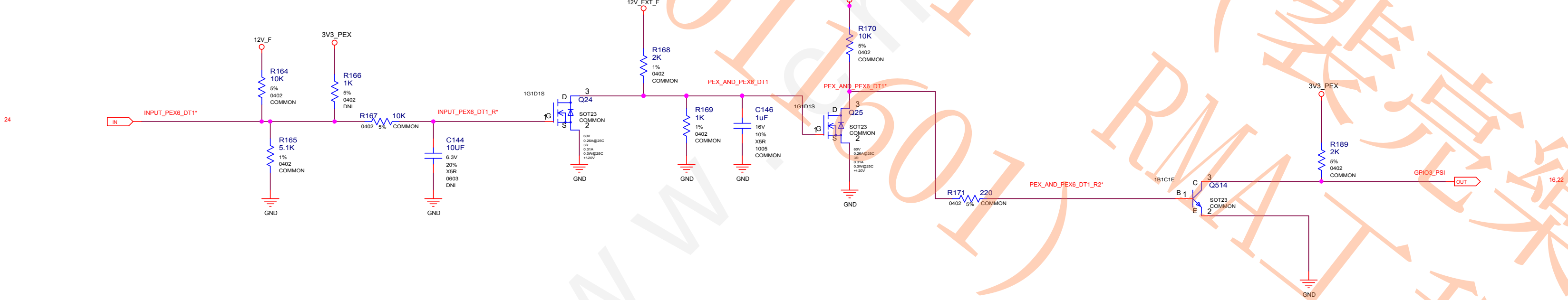
24
IN INPUT_PEX6_DT1*
12V_F
R164 10K 5% 0402 COMMON
R165 5.1K 1% 0402 COMMON
GND
3V3_PEX
R166 1K 5% 0402 DNI
R167 10K 0402 5% COMMON
INPUT_PEX6_DT1_R*
C144 10UF 6.3V 20% X5R 0603 DNI
GND
1G1D1S
Q24 SOT23 COMMON
D 3
G 1
S 2
60V 0.26A@25C 3R 0.31A 0.3W@25C +/-20V
GND
12V_EXT_F
R168 2K 1% 0402 COMMON
PEX_AND_PEX6_DT1
R169 1K 1% 0402 COMMON
GND
C146 1uF 16V 10% X5R 1005 COMMON
GND
3V3_PEX
R170 10K 5% 0402 COMMON
PEX_AND_PEX6_DT1*
1G1D1S
Q25 SOT23 COMMON
D 3
G 1
S 2
60V 0.26A@25C 3R 0.31A 0.3W@25C +/-20V
GND
R171 220 0402 5% COMMON
PEX_AND_PEX6_DT1_R2*
1B1C1E
Q514 SOT23 COMMON
C 3
B 1
E 2
GND
3V3_PEX
R189 2K 5% 0402 COMMON
GPIO3_PSI
OUT
16,22

MICRO-STAR INT'L CO.,LTD		
MS-V280		
Size Custom	Document Description 01_Table of Contents	Rev 1.0
Date: Tuesday, August 14, 2012	Sheet 21 of 25	

MSI CONFIDENTIAL
00017967 RD(C)
20130601 jonepei(裴亮樂)
(00017601) RMA工程課

NVVDD CTRL

Output ripple = 13A p-p at 300kHz with .23uH
Input ripple= 8.8A rms at 300kHz

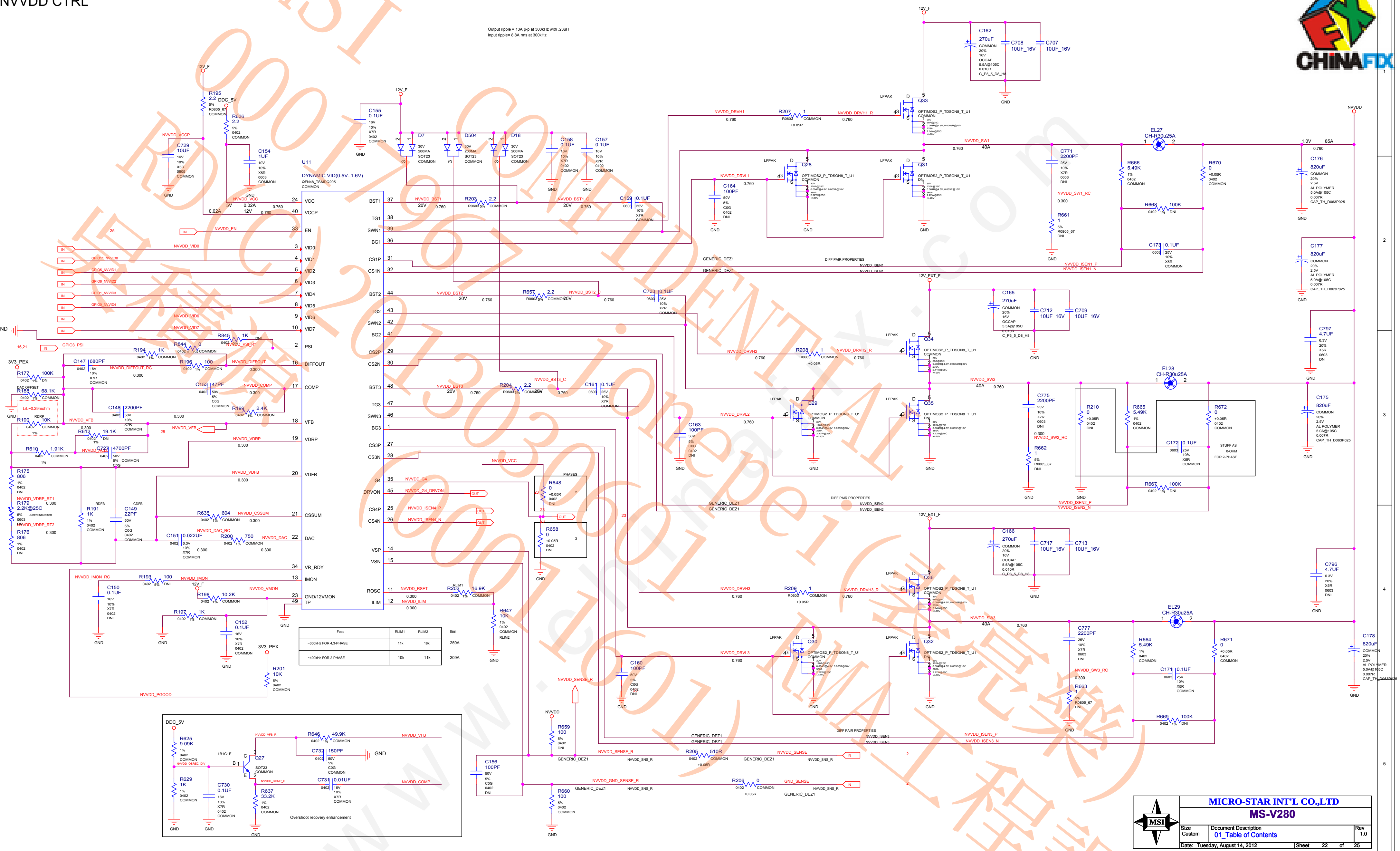
U11
DYNAMIC VID(0.5V..1.6V)
QFN48_TSMDQ205
COMMON
VCC
VCCP
EN
VID0
VID1
VID2
VID3
VID4
VID5
VID6
VID7
PSI
DIFFOUT
COMP
VFB
VDRP
VDFB
CSSUM
DAC
VR_RDY
IMON
GND/12VMON
TP
BST1
TG1
SWN1
BG1
CS1P
CS1N
BST2
TG2
SWN2
BG2
CS2P
CS2N
BST3
TG3
SWN3
BG3
CS3P
CS3N
G4
DRVON
CS4P
CS4N
VSP
VSN
ROSC
ILIM
12V_F
12V_EXT_F
DDC_5V
3V3_PEX
NVVDD
GND
NVVDD_VCCP
NVVDD_VCC
NVVDD_EN
NVVDD_VID0
GPIO11_NVVID0
GPIO5_NVVID1
GPIO6_NVVID2
GPIO1_NVVID3
GPIO0_NVVID4
NVVDD_VID6
NVVDD_VID7
GPIO3_PSI
NVVDD_PSI_R
NVVDD_DIFFOUT
NVVDD_DIFFOUT_RC
NVVDD_COMP
NVVDD_VFB
NVVDD_ACLL
NVVDD_VDRP
NVVDD_VDRP_RT1
NVVDD_VDRP_RT2
NVVDD_VDFB
NVVDD_CSSUM
NVVDD_DAC_RC
NVVDD_DAC
NVVDD_IMON_RC
NVVDD_IMON
NVVDD_VMON
NVVDD_PGOOD
NVVDD_RSET
NVVDD_ILIM
NVVDD_G4
NVVDD_G4_DRVON
NVVDD_ISEN4_P
NVVDD_ISEN4_N
NVVDD_BST1
NVVDD_BST1_C
NVVDD_BST2
NVVDD_BST2_C
NVVDD_BST3
NVVDD_BST3_C
NVVDD_DRVH1
NVVDD_DRVH1_R
NVVDD_DRVL1
NVVDD_DRVH2
NVVDD_DRVH2_R
NVVDD_DRVL2
NVVDD_DRVH3
NVVDD_DRVH3_R
NVVDD_DRVL3
NVVDD_SW1
NVVDD_SW2
NVVDD_SW3
NVVDD_SW1_RC
NVVDD_SW2_RC
NVVDD_SW3_RC
NVVDD_ISEN1_P
NVVDD_ISEN1_N
NVVDD_ISEN2_P
NVVDD_ISEN2_N
NVVDD_ISEN3_P
NVVDD_ISEN3_N
NVVDD_SENSE_R
NVVDD_SENSE
NVVDD_GND_SENSE_R
GND_SENSE
NVVDD_SNS_R
GENERIC_DEZ1
DIFF PAIR PROPERTIES
NVVDD_VFB_R
NVVDD_OSREC_DIV
NVVDD_COMP_C
R195 2.2 5% R0805_67 COMMON
R636 2.2 5% 0402 COMMON
C729 10UF 16V 10% X5R 0805 COMMON
C154 1UF 10V 10% X5R 0603 COMMON
C155 0.1UF 16V 10% X7R 0402 COMMON
D7 30V 200MA SOT23 COMMON
D504 30V 200MA SOT23 COMMON
D18 30V 200MA SOT23 COMMON
C158 0.1UF 16V 10% X7R 0402 COMMON
C157 0.1UF 16V 10% X7R 0402 COMMON
R203 2.2 R0603 5% COMMON
C159 0.1UF 0603 25V 10% X7R COMMON
R657 2.2 R0603 5% COMMON
C733 0.1UF 0603 25V 10% X7R COMMON
R204 2.2 R0603 5% COMMON
C161 0.1UF 0603 25V 10% X7R COMMON
R845 1K 0402 5% DNI
R844 0 0402 +0.05R COMMON
R194 1K 0402 1% COMMON
C147 680PF 0402 16V 10% X7R COMMON
R196 100 0402 1% COMMON
R177 100K 0402 1% DNI
DAC OFFSET
R188 68.1K 0402 1% COMMON
L/L~0.29mohm
RDRP
R190 10K 0402 COMMON 1%
C153 47PF 0402 50V 5% C0G COMMON
C148 2200PF 0402 50V 10% X7R COMMON
R199 2.4K 0402 1% COMMON
R612 19.1K 0402 1% DNI
R610 1.91K 0402 COMMON 1%
C727 4700PF 0402 50V 5% COMMON C0G
R175 806 1% 0402 DNI
R179 2.2K@25C 5% UNDER INDUCTOR 0603 DNI
R176 806 1% 0402 DNI
RDFB
R191 1K 1% 0402 COMMON
CDFB
C149 22PF 50V 5% C0G 0402 COMMON
R635 604 0402 1% COMMON
C151 0.022UF 0402 6.3V 10% X7R COMMON
R200 750 0402 1% COMMON
R193 100 0402 5% DNI
C150 0.1UF 16V 10% X7R 0402 DNI
R198 10.2K 0402 1% COMMON
R197 1K 0402 1% COMMON
C152 0.1UF 16V 10% X7R 0402 COMMON
R201 10K 5% 0402 COMMON
RLIM1
R202 16.9K 0402 1% COMMON
R647 10K 1% 0402 COMMON RLIM2
PHASES
R648 0 +0.05R 0402 DNI
R658 0 +0.05R 0402 DNI
R659 100 5% 0402 DNI
R660 100 5% 0402 COMMON
C156 100PF 50V 5% C0G 0402 DNI
R205 510R 0402 COMMON +0.05R
R206 0 0402 COMMON +0.05R
R625 9.09K 1% 0402 COMMON
R629 1K 1% 0402 COMMON
C730 0.1UF 16V 10% X7R 0402 COMMON
1B1C1E
Q27 SOT23 COMMON
R646 49.9K 0402 1% COMMON
C732 150PF 0402 50V 5% C0G COMMON
C731 0.01UF 0402 16V 10% X7R COMMON
R637 33.2K 1% 0402 COMMON
Overshoot recovery enhancement
LFPAK
Q33 OPTIMOS2_P_TDSON8_T_U1 COMMON
Q31 OPTIMOS2_P_TDSON8_T_U1 DNI
Q28 OPTIMOS2_P_TDSON8_T_U1 COMMON
Q34 OPTIMOS2_P_TDSON8_T_U1 COMMON
Q35 OPTIMOS2_P_TDSON8_T_U1 DNI
Q29 OPTIMOS2_P_TDSON8_T_U1 COMMON
Q36 OPTIMOS2_P_TDSON8_T_U1 COMMON
Q32 OPTIMOS2_P_TDSON8_T_U1 DNI
Q30 OPTIMOS2_P_TDSON8_T_U1 COMMON
30V 69A@25C 0.008R@4.5V, 0.0055R@10V 276A 2.14W@25C +/-20V
30V 120A@25C 0.004R@4.5V, 0.003R@10V 360A 2.22W@25C +/-20V
R207 1 R0603 COMMON +0.05R
R208 1 R0603 COMMON +0.05R
R209 1 R0603 COMMON +0.05R
C164 100PF 50V 5% C0G 0402 DNI
C163 100PF 50V 5% C0G 0402 DNI
C160 100PF 50V 5% C0G 0402 DNI
C162 270uF COMMON 20% 16V OCCAP 5.5A@105C 0.010R C_P3_5_D8_H8
C708 10UF_16V
C707 10UF_16V
C165 270uF COMMON 20% 16V OCCAP 5.5A@105C 0.010R C_P3_5_D8_H8
C712 10UF_16V
C709 10UF_16V
C166 270uF COMMON 20% 16V OCCAP 5.5A@105C 0.010R C_P3_5_D8_H8
C717 10UF_16V
C713 10UF_16V
EL27 CH-R30u25A
EL28 CH-R30u25A
EL29 CH-R30u25A
40A
1.0V
85A
C771 2200PF 25V 10% X7R 0603 DNI
R661 1 5% R0805_67 DNI
C775 2200PF 25V 10% X7R 0603 DNI
R662 1 5% R0805_67 DNI
C777 2200PF 25V 10% X7R 0603 DNI
R663 1 5% R0805_67 DNI
R666 5.49K 1% 0402 COMMON
R670 0 +0.05R 0402 COMMON
R668 100K 0402 1% DNI
C173 0.1UF 0603 25V 10% X5R COMMON
R210 0 +0.05R 0402 DNI
R665 5.49K 1% 0402 COMMON
R672 0 +0.05R 0402 COMMON
C172 0.1UF 0603 25V 10% X5R COMMON
STUFF AS 0-OHM FOR 2-PHASE
R667 100K 0402 1% DNI
R664 5.49K 1% 0402 COMMON
R671 0 +0.05R 0402 COMMON
C171 0.1UF 0603 25V 10% X5R COMMON
R669 100K 0402 1% DNI
C176 820uF COMMON 20% 2.5V AL POLYMER 5.0A@105C 0.007R CAP_TH_D063P025
C177 820uF COMMON 20% 2.5V AL POLYMER 5.0A@105C 0.007R CAP_TH_D063P025
C175 820uF COMMON 20% 2.5V AL POLYMER 5.0A@105C 0.007R CAP_TH_D063P025
C178 820uF COMMON 20% 2.5V AL POLYMER 5.0A@105C 0.007R CAP_TH_D063P025
C797 4.7UF 6.3V 20% X5R 0603 DNI
C796 4.7UF 6.3V 20% X5R 0603 DNI
IN
OUT
0.760
0.300
20V
0.02A
5V
12V

Fosc	RLIM1	RLIM2	Ilim
~300kHz FOR 4,3-PHASE	11k	18k	250A
~400kHz FOR 2-PHASE	10k	11k	209A

MICRO-STAR INT'L CO.,LTD

MS-V280

Size	Document Description	Rev
Custom	01_Table of Contents	1.0

Date: Tuesday, August 14, 2012 Sheet 22 of 25

NVVDD Phase 4

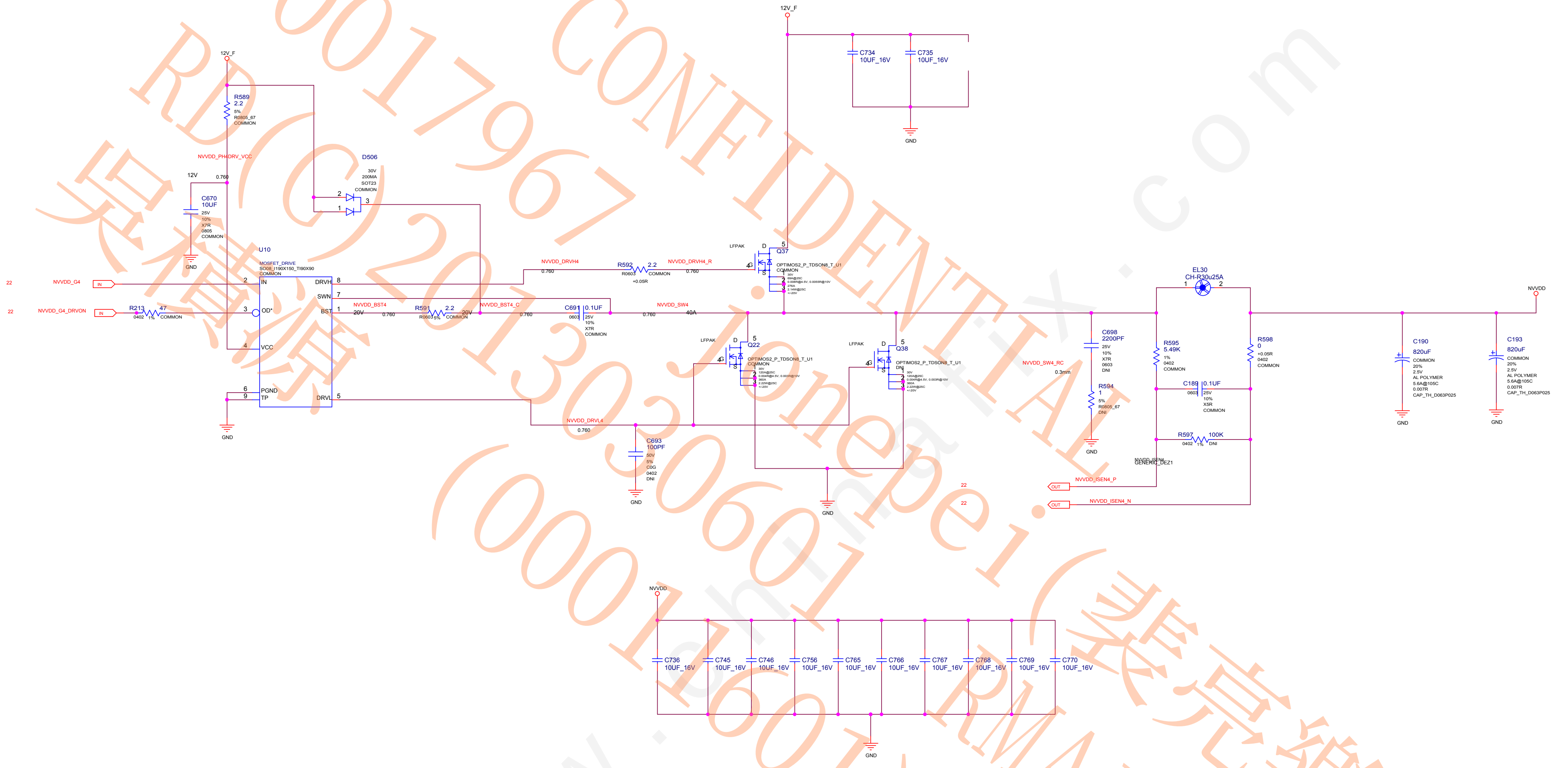
12V_F
C734
10UF_16V
C735
10UF_16V
GND
12V_F
R589
2.2
5%
R0805_67
COMMON
NVVDD_PH4DRV_VCC
12V
0.760
C670
10UF
25V
10%
X7R
0805
COMMON
GND
D506
30V
200MA
SOT23
COMMON
U10
MOSFET_DRIVE
SO08_I190X150_TI90X90
COMMON
22
NVVDD_G4
IN
22
NVVDD_G4_DRVON
IN
R213
47
0402
1%
COMMON
IN
OD*
VCC
PGND
TP
DRVH
SWN
BST
DRVL
GND
NVVDD_DRVH4
0.760
R592
2.2
R0603
+0.05R
COMMON
NVVDD_DRVH4_R
0.760
NVVDD_BST4
20V
0.760
R591
2.2
R0603
5%
COMMON
20V
NVVDD_BST4_C
0.760
C691
0.1UF
0603
25V
10%
X7R
COMMON
NVVDD_SW4
0.760
40A
LFPAK
Q37
OPTIMOS2_P_TDSON8_T_U1
COMMON
30V
69A@25C
0.008R@4.5V, 0.0055R@10V
276A
2.14W@25C
+/-20V
LFPAK
Q22
OPTIMOS2_P_TDSON8_T_U1
COMMON
30V
120A@25C
0.004R@4.5V, 0.003R@10V
360A
2.22W@25C
+/-20V
LFPAK
Q38
OPTIMOS2_P_TDSON8_T_U1
DNI
30V
120A@25C
0.004R@4.5V, 0.003R@10V
360A
2.22W@25C
+/-20V
NVVDD_DRVL4
0.760
C693
100PF
50V
5%
C0G
0402
DNI
GND
GND
C698
2200PF
25V
10%
X7R
0603
DNI
NVVDD_SW4_RC
0.3mm
R594
1
5%
R0805_67
DNI
GND
EL30
CH-R30u25A
R595
5.49K
1%
0402
COMMON
R598
0
+0.05R
0402
COMMON
C189
0.1UF
0603
25V
10%
X5R
COMMON
R597
100K
0402
1%
DNI
NVVDD_ISEN4
GENERIC_DEZ1
22
OUT
NVVDD_ISEN4_P
22
OUT
NVVDD_ISEN4_N
NVVDD
C190
820uF
COMMON
20%
2.5V
AL POLYMER
5.6A@105C
0.007R
CAP_TH_D063P025
GND
C193
820uF
COMMON
20%
2.5V
AL POLYMER
5.6A@105C
0.007R
CAP_TH_D063P025
GND
NVVDD
C736
10UF_16V
C745
10UF_16V
C746
10UF_16V
C756
10UF_16V
C765
10UF_16V
C766
10UF_16V
C767
10UF_16V
C768
10UF_16V
C769
10UF_16V
C770
10UF_16V
GND

MICRO-STAR INT'L CO.,LTD

MS-V280

Size	Document Description	Rev
Custom	01_Table of Contents	1.0

Date: Tuesday, August 14, 2012 | Sheet 23 of 25

MSI 00017967 CONFIDENTIAL
RD(C)2013030601 Jonebei (裴亮樂)
吳植源 (00011601) RMA工程課

12V EXT / 12V PEX Power Select Circuit

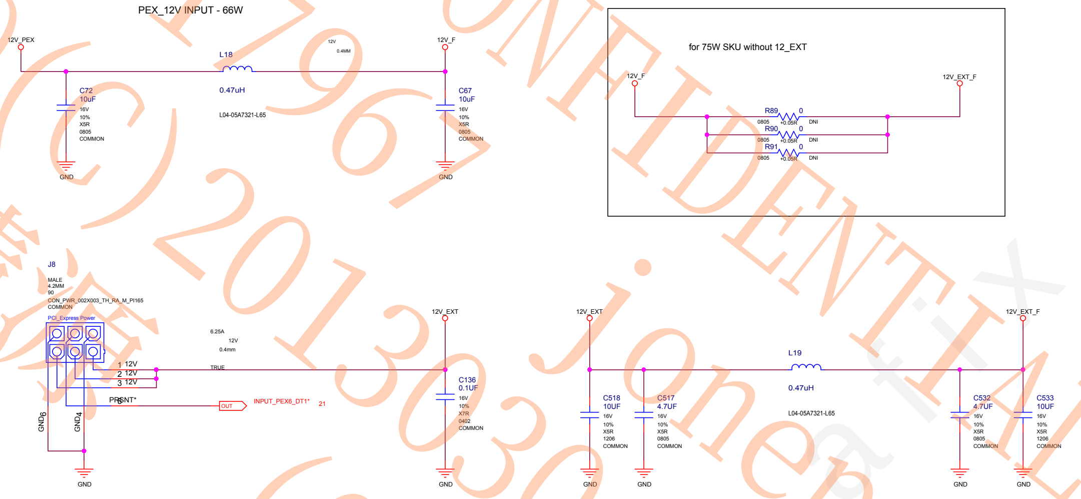
PEX_12V INPUT - 66W
12V_PEX
L18
0.47uH
L04-05A7321-L65
12V
0.4MM
12V_F
C72
10uF
16V
10%
X5R
0805
COMMON
C67
10uF
16V
10%
X5R
0805
COMMON
GND
GND
for 75W SKU without 12_EXT
12V_F
12V_EXT_F
R89 0
0805 +0.05R DNI
R90 0
0805 +0.05R DNI
R91 0
0805 +0.05R DNI
J8
MALE
4.2MM
90
CON_PWR_002X003_TH_RA_M_PI165
COMMON
PCI_Express Power
1 12V
2 12V
3 12V
PRSNT*
5
GND6
GND4
GND
6.25A
12V
0.4mm
TRUE
OUT
INPUT_PEX6_DT1*
21
12V_EXT
C136
0.1UF
16V
10%
X7R
0402
COMMON
GND
12V_EXT
L19
0.47uH
L04-05A7321-L65
12V_EXT_F
C518
10UF
16V
10%
X5R
1206
COMMON
C517
4.7UF
16V
10%
X5R
0805
COMMON
C532
4.7UF
16V
10%
X5R
0805
COMMON
C533
10UF
16V
10%
X5R
1206
COMMON
GND
GND
GND
GND

MSI 0001796 CONFIDENTIAL
RD(C)20130601 jonepei(裴亮樂) RMA工程課
吳積源 (00011601)
CHINAFIX

MICRO-STAR INT'L CO.,LTD
MS-V280

Size	Document Description	Rev
Custom	01_Table of Contents	1.0

Date: Tuesday, August 14, 2012 Sheet 24 of 25

PS: Shutdown & 6262

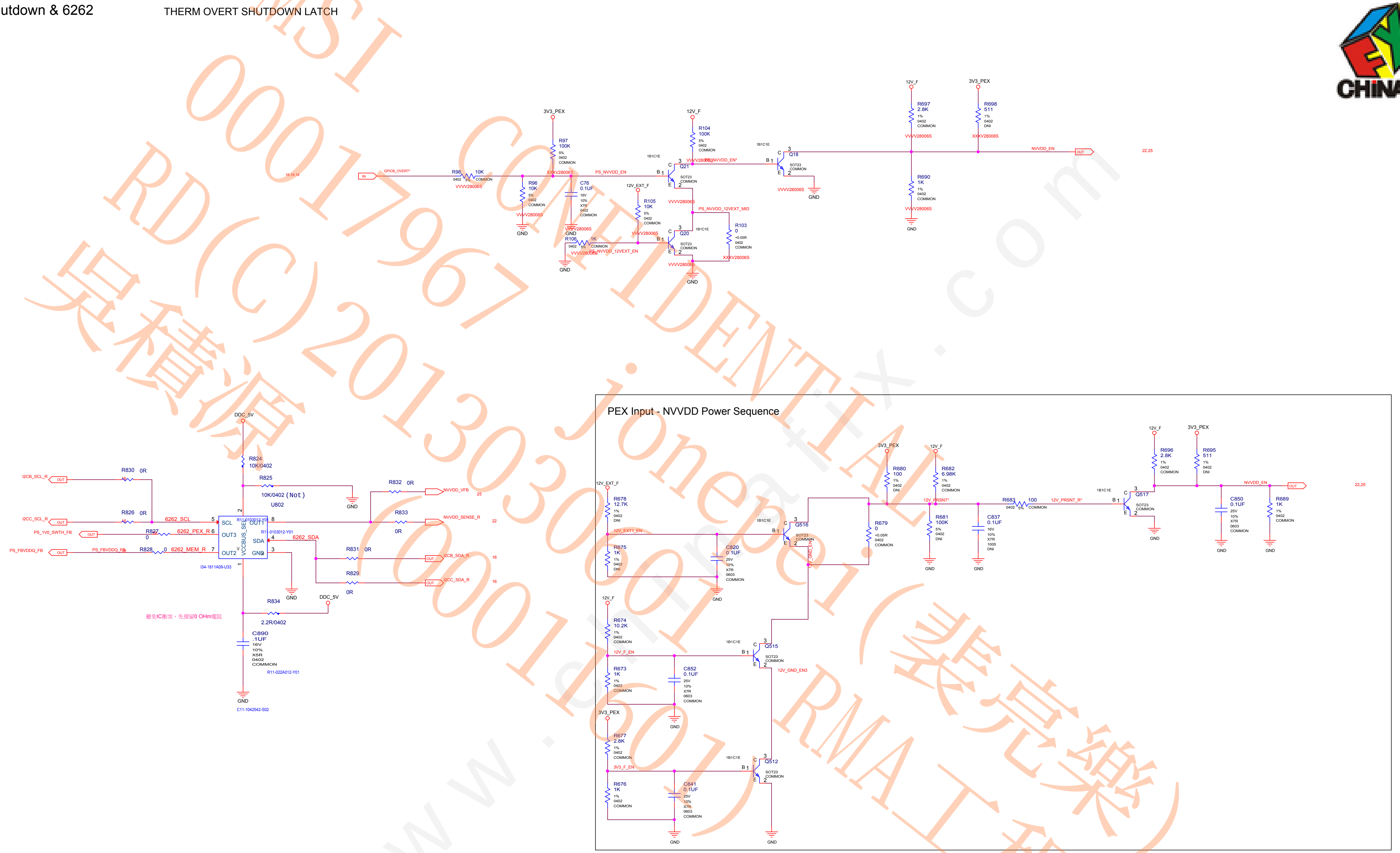
THERM OVERT SHUTDOWN LATCH
IN
GPIO8_OVERT*
16,18,19
R98 10K 0402 5% COMMON
VVVV28006S
3V3_PEX
R97 100K 5% 0402 COMMON
XXXV28006S
R96 10K 5% 0402 COMMON
VVVV28006S
GND
C76 0.1UF 16V 10% X7R 0402 COMMON
VVVV28006S
GND
R106 1K 0402 5% COMMON
VVVV28006S
PS_NVVDD_12VEXT_EN
GND
PS_NVVDD_EN
12V_F
R104 100K 5% 0402 COMMON
1B1C1E
Q21 SOT23 COMMON
VVVV28006S
PS_NVVDD_EN*
12V_EXT_F
R105 10K 5% 0402 COMMON
VVVV28006S
VVVV28006S
PS_NVVDD_12VEXT_MID
Q20 SOT23 COMMON
1B1C1E
R103 0 +0.05R 0402 COMMON
XXXV28006S
VVVV28006S
GND
1B1C1E
Q18 SOT23 COMMON
VVVV28006S
GND
12V_F
R697 2.8K 1% 0402 COMMON
VVVV28006S
R690 1K 1% 0402 COMMON
VVVV28006S
GND
3V3_PEX
R698 511 1% 0402 DNI
XXXV28006S
NVVDD_EN
OUT
22,25
DDC_5V
R824 10K/0402
R825 10K/0402 (Not)
GND
U802
I2CB_SCL_R
OUT
R830 0R
16
I2CC_SCL_R
OUT
R826 0R
16
6262_SCL
PS_1V0_SWTH_FB
OUT
R827 0
6262_PEX_R
PS_FBVDDQ_FB
OUT
PS_FBVDDQ_FB
R828 0
6262_MEM_R
SCL
OUT3
OUT2
VCCBUS_SEL
OUT1
SDA
GND
R11-0103012-Y01
R11-0103012-Y01
I34-1811A09-U33
6262_SDA
GND
R832 0R
NVVDD_VFB
25
R833 0R
NVVDD_SENSE_R
22
R831 0R
OUT
I2CB_SDA_R
16
R829 0R
OUT
I2CC_SDA_R
16
DDC_5V
R834 2.2R/0402
避免IC衝突，先預留0 OHm電阻
C890 .1UF 16V 10% X5R 0402 COMMON
R11-022A012-Y01
GND
C11-1042542-S02
PEX Input - NVVDD Power Sequence
12V_EXT_F
R678 12.7K 1% 0402 DNI
12V_EXT1_EN
R675 1K 1% 0402 DNI
C820 0.1UF 25V 10% X7R 0603 COMMON
GND
1B1C1E
Q516 SOT23 COMMON
12V_GND_EN
R679 0 +0.05R 0402 COMMON
3V3_PEX
R680 100 1% 0402 DNI
12V_F
R682 6.98K 1% 0402 COMMON
12V_PRSNT*
R681 100K 5% 0402 DNI
GND
C837 0.1UF 16V 10% X7R 1005 DNI
GND
R683 100 0402 5% COMMON
12V_PRSNT_R*
1B1C1E
Q517 SOT23 COMMON
GND
12V_F
R696 2.8K 1% 0402 COMMON
3V3_PEX
R695 511 1% 0402 DNI
NVVDD_EN
OUT
22,25
C850 0.1UF 25V 10% X7R 0603 COMMON
GND
R689 1K 1% 0402 COMMON
GND
12V_F
R674 10.2K 1% 0402 COMMON
12V_F_EN
R673 1K 1% 0402 COMMON
C852 0.1UF 25V 10% X7R 0603 COMMON
GND
1B1C1E
Q515 SOT23 COMMON
12V_GND_EN3
3V3_PEX
R677 2.8K 1% 0402 COMMON
3V3_F_EN
R676 1K 1% 0402 COMMON
C841 0.1UF 25V 10% X7R 0603 COMMON
GND
1B1C1E
Q512 SOT23 COMMON
GND

MSI 00017967 CONFIDENTIAL
RD(C)2013030601 Jonepei(裴亮樂) RMA工程課
吳積源

MICRO-STAR INT'L CO.,LTD

MS-V280

Size	Document Description	Rev
Custom	01_Table of Contents	1.0

Date: Tuesday, August 14, 2012 Sheet 25 of 25