PG210 B00

GP107 128b GDDR5, 75W , PCB 5.7"
DVI-D_DL (DP + DP) + HDMI (DP) + DP

TABLE OF CONTENTS

Page	Description
1	Table of Contents
2	Block Diagram
3	PCI Express
4	MEMORY: GPU Partition A/B
5	MEMORY: FBA[31:0]
6	MEMORY: FBA[63:32]
7	MEMORY: FBB[31:0]
8	MEMORY: FBB[63:32]
9	GPU FBVDDQ & 1V8 Decoupling
10	GPU NVVDD & NVVDDS DECOUPLING
11	IFPAB DVI-DL
12	IFPD DP
13	IFPC HDMI
14	IFPEF UNUSED
15	MISC1: Fan, Thermal, JTAG, GPIO
16	MISC2: ROM, XTAL, Straps
17	Power Inputs and Filtering
18	Power Sequence
19	PS: NV3V3 & NV12V
20	PSI: 1V8
21	PSII: 5V & 12V_FAN
22	PS III: PEXVDD
23	PS IV: FBVDDQ
24	PS V: NVVDD OVR2+1
25	PS V: NVVDD Phase 1,2
26	PS V: NVVDD Phase 3
27	MECH: Bracket/Thermal

V335-10 TABLE OF CONTENTS

Page	Description
11	Change J3 library and footprint
12	Change J1 library and footprint
13	Change J2 library and footprint
15	Remove 2pin Fan control
17	Change J6/L3/L11 library and footprint
20	Add co-lay LDO
23	Change to UP1537 circuit
	Add co-lay SY8288A
25	change Q9/Q11/L9/L10 library and footprint
26	change Q7/L8 library and footprint
27	Add Logo LED circuit

MICRO-STAR INT'L CO.,LTD

MS-V335

Size: Custom | Document Description: 01_Table of Contents | Rev: 1.0

Date: Tuesday, August 23, 2016 | Sheet 1 of 28

Block Diagram

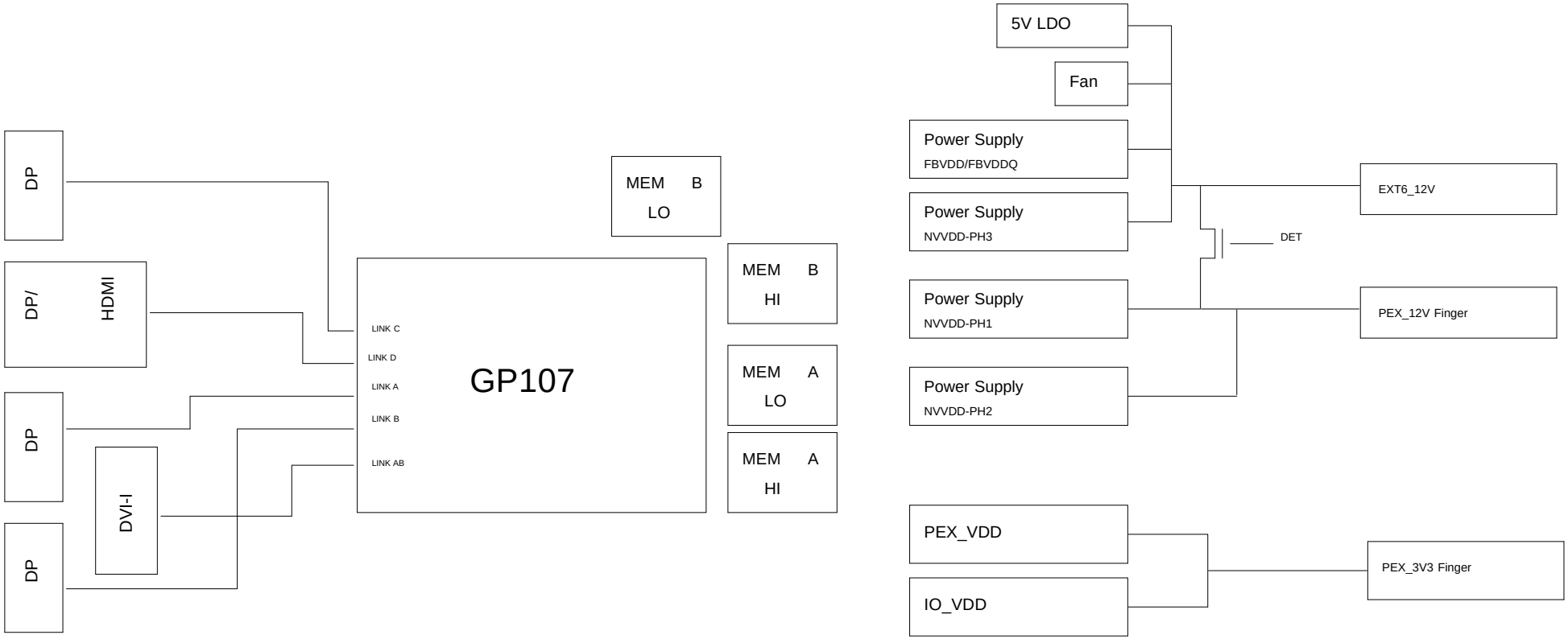

MSI	MICRO-STAR INT'L CO.,LTD	
	MS-V335	
Size: Custom	Document Description: 02_Block Diagram	Rev: 1.0
Date: Friday, August 19, 2016	Sheet 2 of 28	

PCI Express

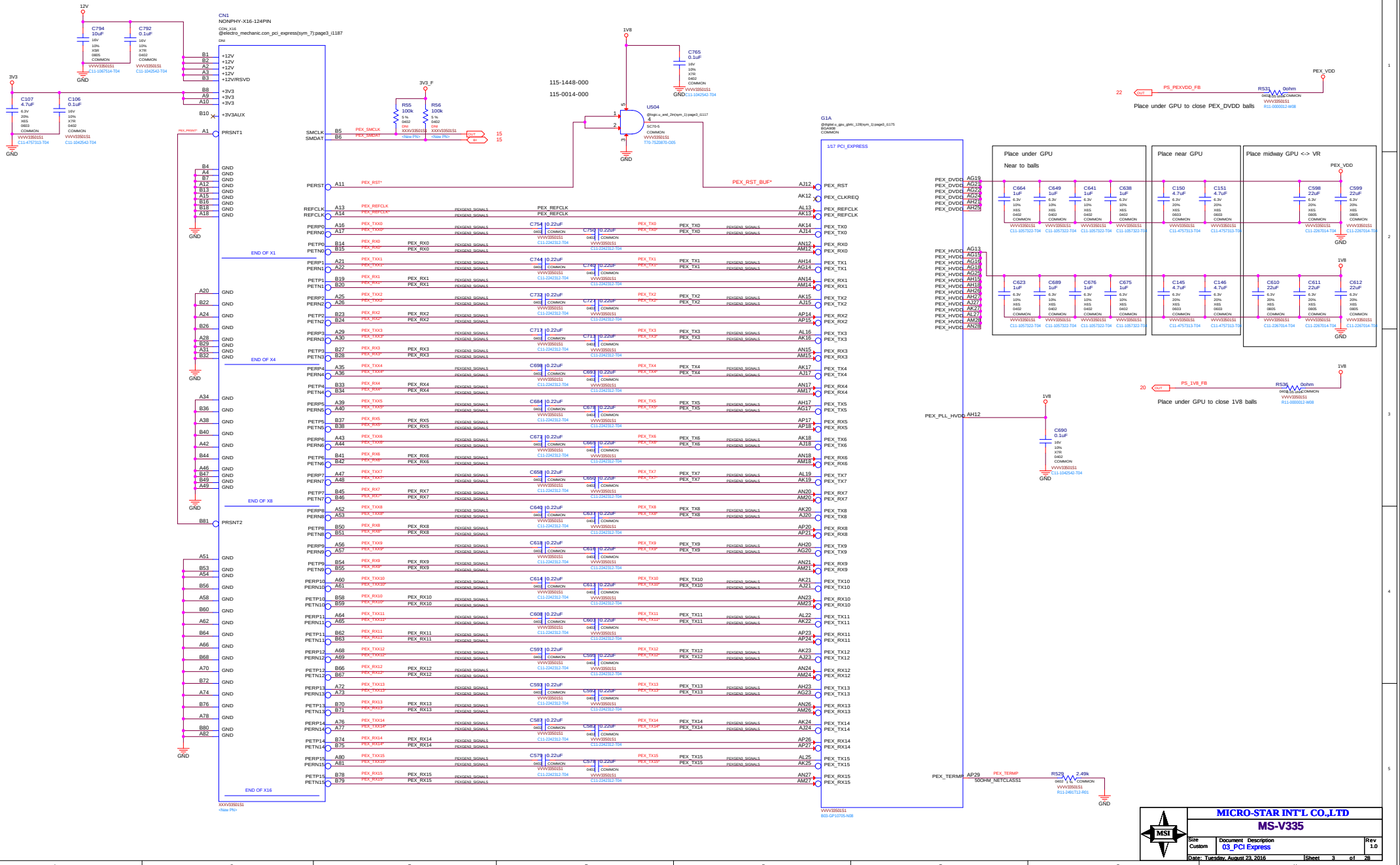
CN1
NONPHY-X16-124PIN
115-1448-000
115-0014-000
U504
G1A
1/17 PCI_EXPRESS
PERST
REFCLK
PERP0
PERN0
PETP0
PETN0
PERP1
PERN1
PETP1
PETN1
PERP2
PERN2
PETP2
PETN2
PERP3
PERN3
PETP3
PETN3
PERP4
PERN4
PETP4
PETN4
PERP5
PERN5
PETP5
PETN5
PERP6
PERN6
PETP6
PETN6
PERP7
PERN7
PETP7
PETN7
PERP8
PERN8
PETP8
PETN8
PERP9
PERN9
PETP9
PETN9
PERP10
PERN10
PETP10
PETN10
PERP11
PERN11
PETP11
PETN11
PERP12
PERN12
PETP12
PETN12
PERP13
PERN13
PETP13
PETN13
PERP14
PERN14
PETP14
PETN14
PERP15
PERN15
PETP15
PETN15
PEX_RST_BUF*
PEX_CLKREQ
PEX_REFCLK
PEX_TX0
PEX_TX1
PEX_TX2
PEX_TX3
PEX_TX4
PEX_TX5
PEX_TX6
PEX_TX7
PEX_TX8
PEX_TX9
PEX_TX10
PEX_TX11
PEX_TX12
PEX_TX13
PEX_TX14
PEX_TX15
PEX_RX0
PEX_RX1
PEX_RX2
PEX_RX3
PEX_RX4
PEX_RX5
PEX_RX6
PEX_RX7
PEX_RX8
PEX_RX9
PEX_RX10
PEX_RX11
PEX_RX12
PEX_RX13
PEX_RX14
PEX_RX15
PEX_PLL_HVDD
PEX_TERMP
550HM_NETCLASS1
PEX_VDD
PS_PEXVDD_FB
Place under GPU to close PEX_DVDD balls
PS_1V8_FB
Place under GPU to close 1V8 balls
Place under GPU
Near to balls
Place near GPU
Place midway GPU <-> VR
END OF X1
END OF X4
END OF X8
END OF X16
PRSNT1
PRSNT2
MICRO-STAR INT'L CO.,LTD
MS-V335
Size
Custom
Document Description
03_PCI Express
Rev
1.0
Date: Tuesday, August 23, 2016
Sheet 3 of 28

MEMORY: GPU Partition A/B

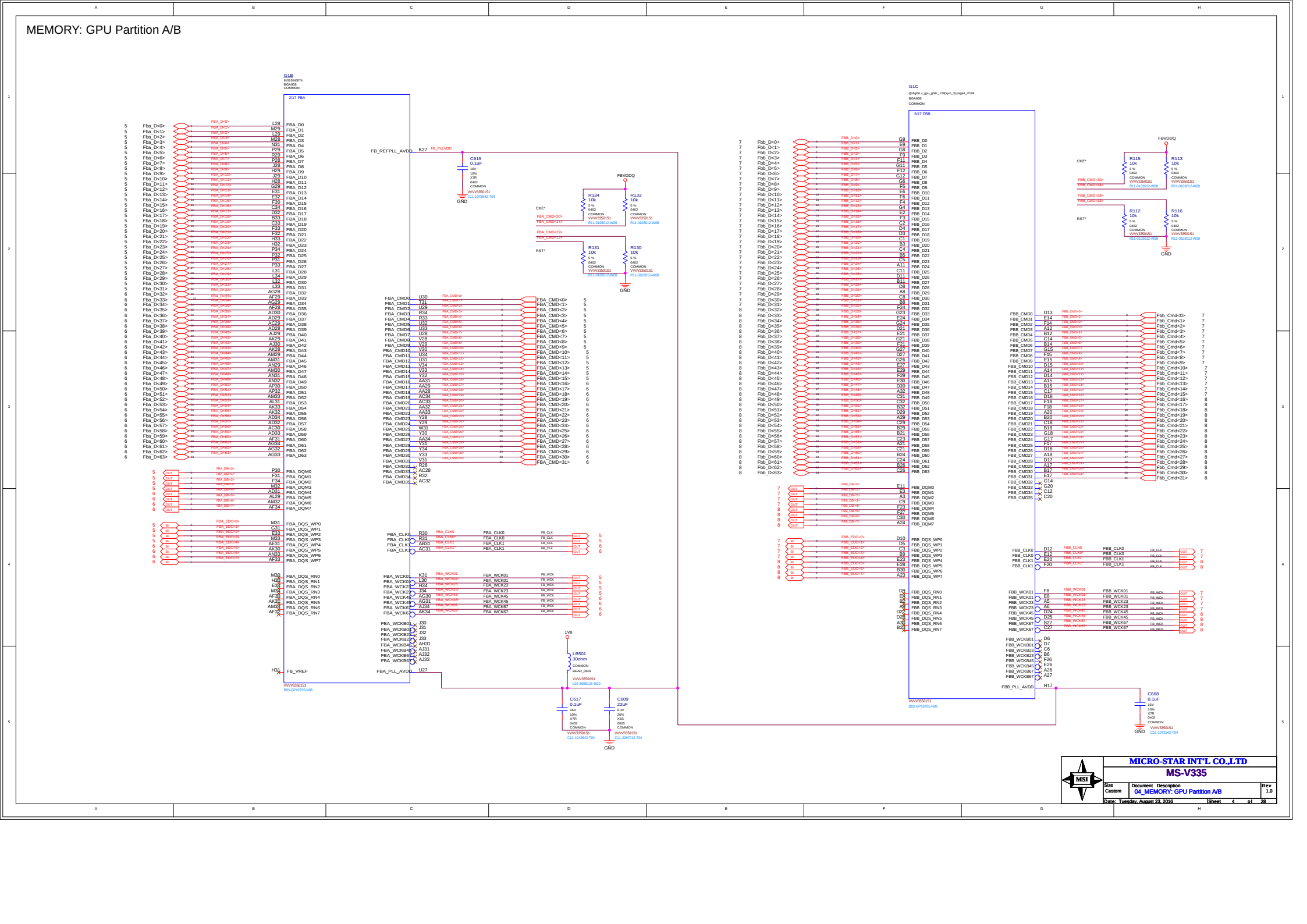

MEMORY: FBA Partition 31..0

CMD	0..31	32..63
CMD0	CS*	
CMD1	A3_BA3	
CMD2	A2_BA0	
CMD3	A4_BA2	
CMD4	A5_BA1	
CMD5	WE*	
CMD6	A7_A8	
CMD7	A6_A11	
CMD8	AB*	
CMD9	A12_RFU	
CMD10	A0_A10	
CMD11	A1_A9	
CMD12	RAS*	
CMD13	RST*	
CMD14	CKE*	
CMD15	CAS*	
CMD16		CS*
CMD17		A3_BA3
CMD18		A2_BA0
CMD19		A4_BA2
CMD20		A5_BA1
CMD21		WE*
CMD22		A7_A8
CMD23		A6_A11
CMD24		AB*
CMD25		A12_RFU
CMD26		A0_A10
CMD27		A1_A9
CMD28		RAS*
CMD29		RST*
CMD30		CKE*
CMD31		CAS*

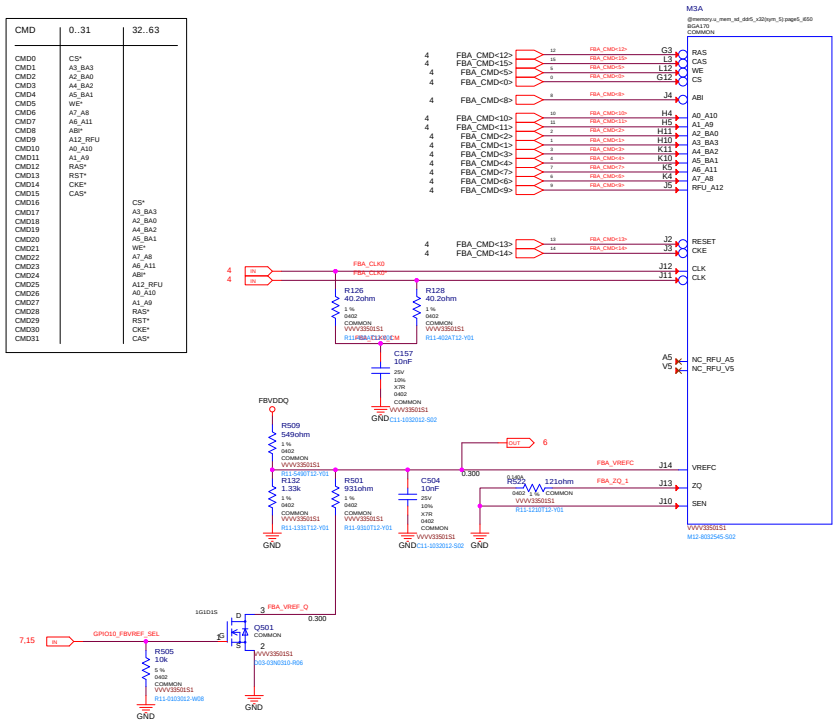

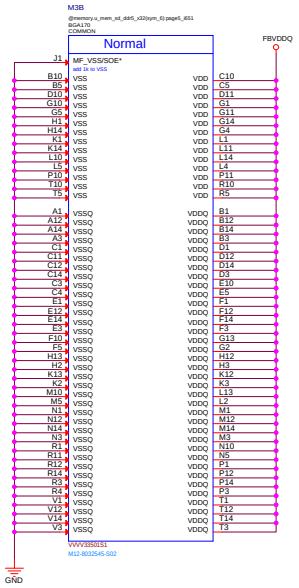

PLACE Directly Under DRAM

PLACE AT THE PACKAGE KEEPOUT/PERIMETER OF THE DRAM

PLACE Around DRAM

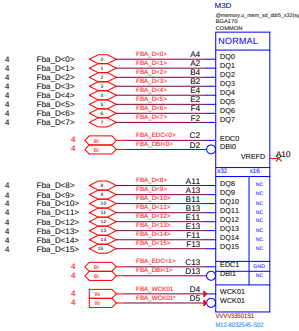

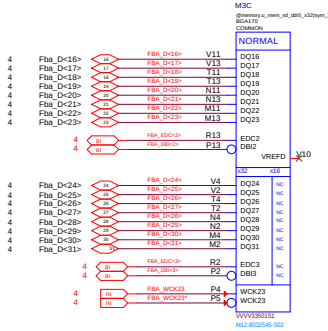

MICRO-STAR INT'L CO.,LTD		
MS-V335		
Size: Custom	Document Description: 05_MEMORY: FBA Partition 31..0	Rev: 1.0
Date: Tuesday, August 23, 2016	Sheet 5 of 28	

MEMORY: FBA Partition 63..32

CMD	0..31	32..63
CMD0	CS*	
CMD1	A3_BA3	
CMD2	A2_BA0	
CMD3	A4_BA2	
CMD4	A5_BA1	
CMD5	WE*	
CMD6	A7_A8	
CMD7	A6_A11	
CMD8	ABI*	
CMD9	A12_RFU	
CMD10	A0_A10	
CMD11	A1_A9	
CMD12	RAS*	
CMD13	RST*	
CMD14	CKE*	
CMD15	CAS*	
CMD16		CS*
CMD17		A3_BA3
CMD18		A2_BA0
CMD19		A4_BA2
CMD20		A5_BA1
CMD21		WE*
CMD22		A7_A8
CMD23		A6_A11
CMD24		ABI*
CMD25		A12_RFU
CMD26		A0_A10
CMD27		A1_A9
CMD28		RAS*
CMD29		RST*
CMD30		CKE*
CMD31		CAS*

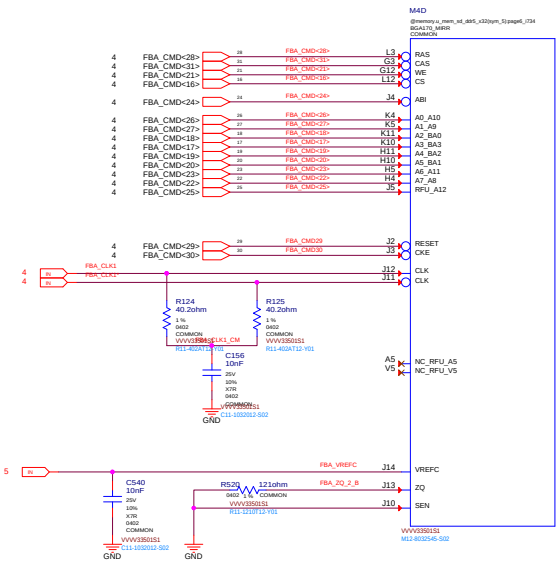

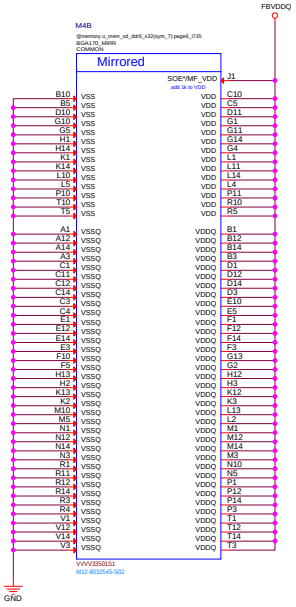

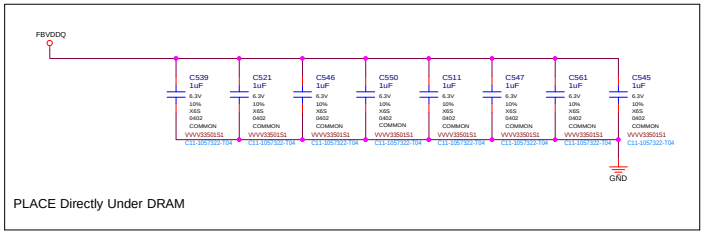

PLACE Directly Under DRAM

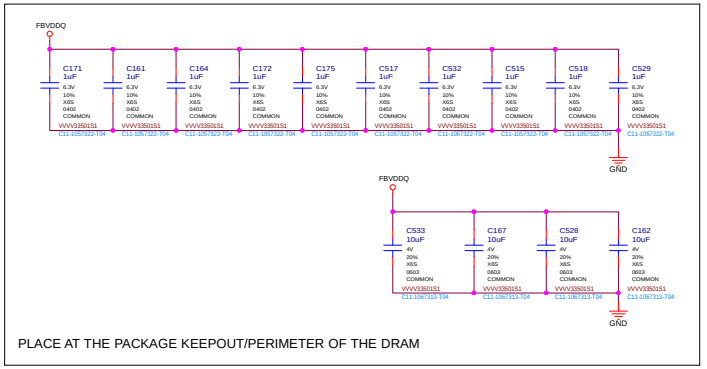

PLACE AT THE PACKAGE KEEPOUT/PERIMETER OF THE DRAM

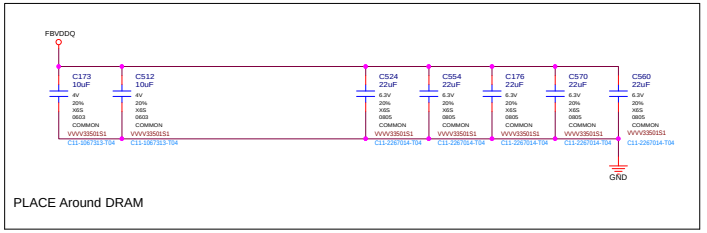

PLACE Around DRAM

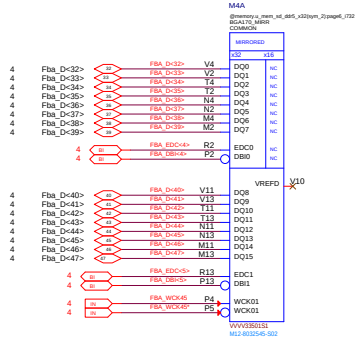

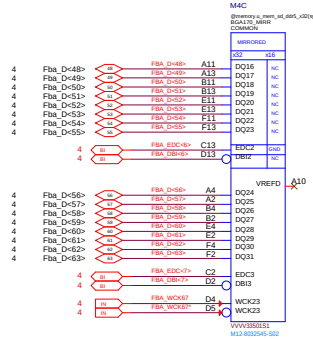

MICRO-STAR INT'L CO.,LTD	
MS-V335	
Size: Custom	Document Description: 06_MEMORY: FBA Partition 63..32
Rev: 1.0	
Date: Tuesday, August 23, 2016	Sheet 6 of 28

MEMORY: FBB Partition 31..0

CMD	0..31	32..63
CMD0	CS*	
CMD1	A3_BA3	
CMD2	A2_BA2	
CMD3	A4_BA2	
CMD4	A5_BA1	
CMD5	WE*	
CMD6	A7_A8	
CMD7	A6_A11	
CMD8	A8*	
CMD9	A12_RFU	
CMD10	A0_A10	
CMD11	A1_A9	
CMD12	RAS*	
CMD13	RST*	
CMD14	CKE*	
CMD15	CAS*	
CMD16		CS*
CMD17		A3_BA3
CMD18		A2_BA0
CMD19		A4_BA2
CMD20		A5_BA1
CMD21		WE*
CMD22		A7_A8
CMD23		A6_A11
CMD24		A8*
CMD25		A12_RFU
CMD26		A0_A10
CMD27		A1_A9
CMD28		RAS*
CMD29		RST*
CMD30		CKE*
CMD31		CAS*

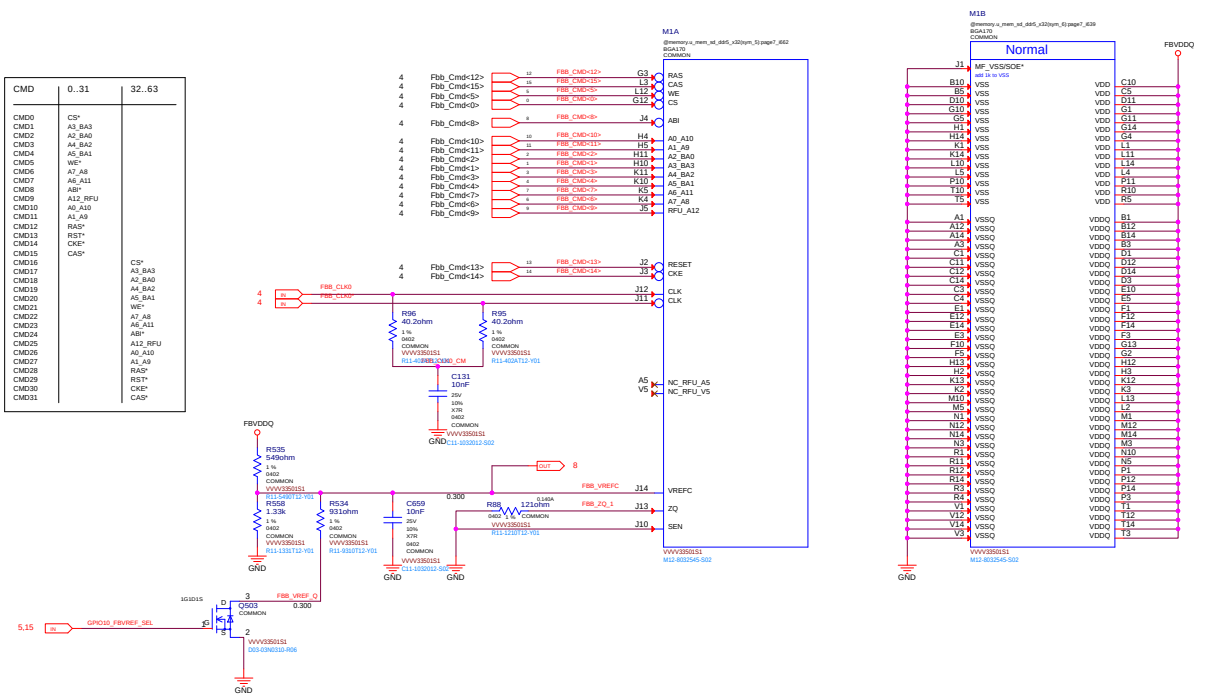

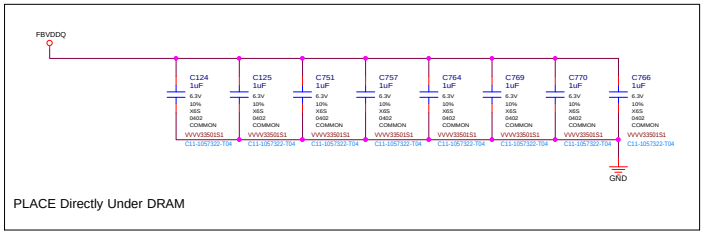

PLACE Directly Under DRAM

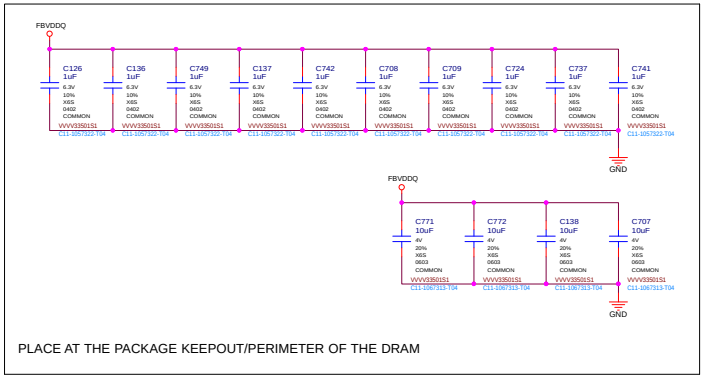

PLACE AT THE PACKAGE KEEPOUT/PERIMETER OF THE DRAM

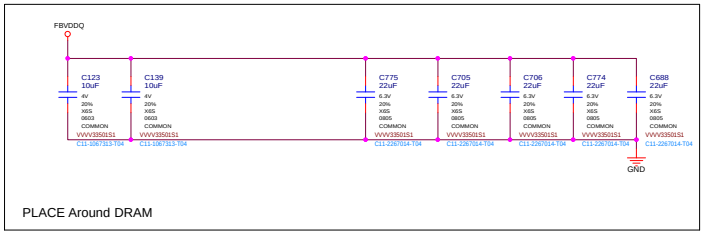

PLACE Around DRAM

MICRO-STAR INT'L CO.,LTD	
MS-V335	
Size: Custom	Document Description: 07_MEMORY: FBB Partition 31..0
Rev: 1.0	
Date: Tuesday, August 23, 2016	Sheet 7 of 28

MEMORY: FBB Partition 63..32

CMD	0..31	32..63
CMD0	CS*	
CMD1	A3_BA3	
CMD2	A2_BA0	
CMD3	A4_BA2	
CMD4	A5_BA1	
CMD5	WE*	
CMD6	A7_A8	
CMD7	A6_A11	
CMD8	AB*	
CMD9	A12_RFU	
CMD10	A0_A10	
CMD11	A1_A9	
CMD12	RAS*	
CMD13	RST*	
CMD14	CKE*	
CMD15	CAS*	
CMD16		CS*
CMD17		A3_BA3
CMD18		A2_BA0
CMD19		A4_BA2
CMD20		A5_BA1
CMD21		WE*
CMD22		A7_A8
CMD23		A6_A11
CMD24		AB*
CMD25		A12_RFU
CMD26		A0_A10
CMD27		A1_A9
CMD28		RAS*
CMD29		RST*
CMD30		CKE*
CMD31		CAS*

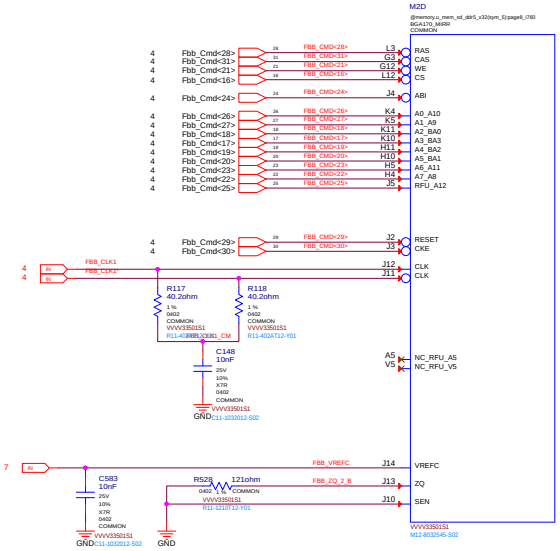

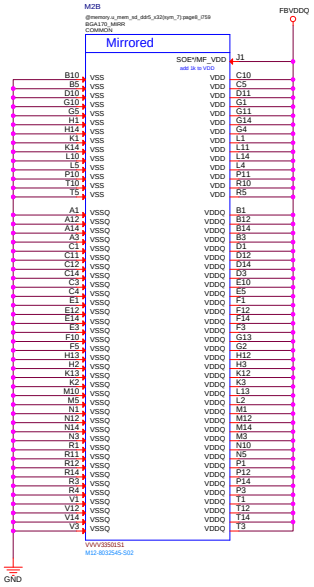

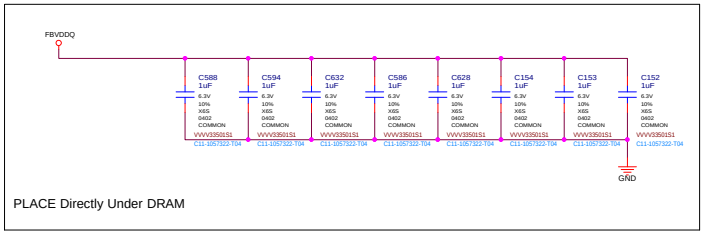

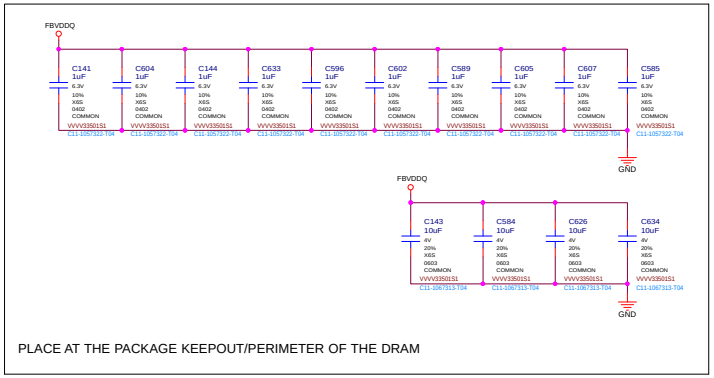

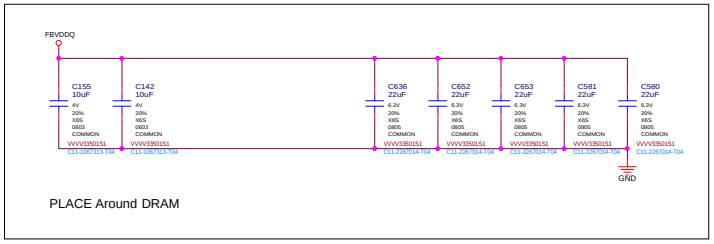

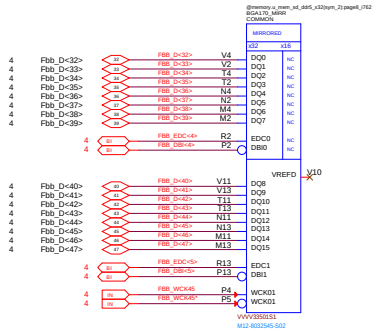

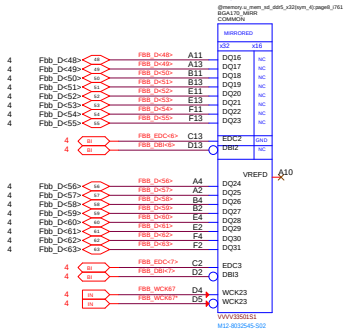

MSI	MICRO-STAR INT'L CO.,LTD	
	MS-V335	
Size: Custom	Document Description: 08_MEMORY: FBB Partition 63..32	Rev: 1.0
Date: Tuesday, August 23, 2016	Sheet 8 of 28	

GPU FBVDDQ & 1V8 Decoupling

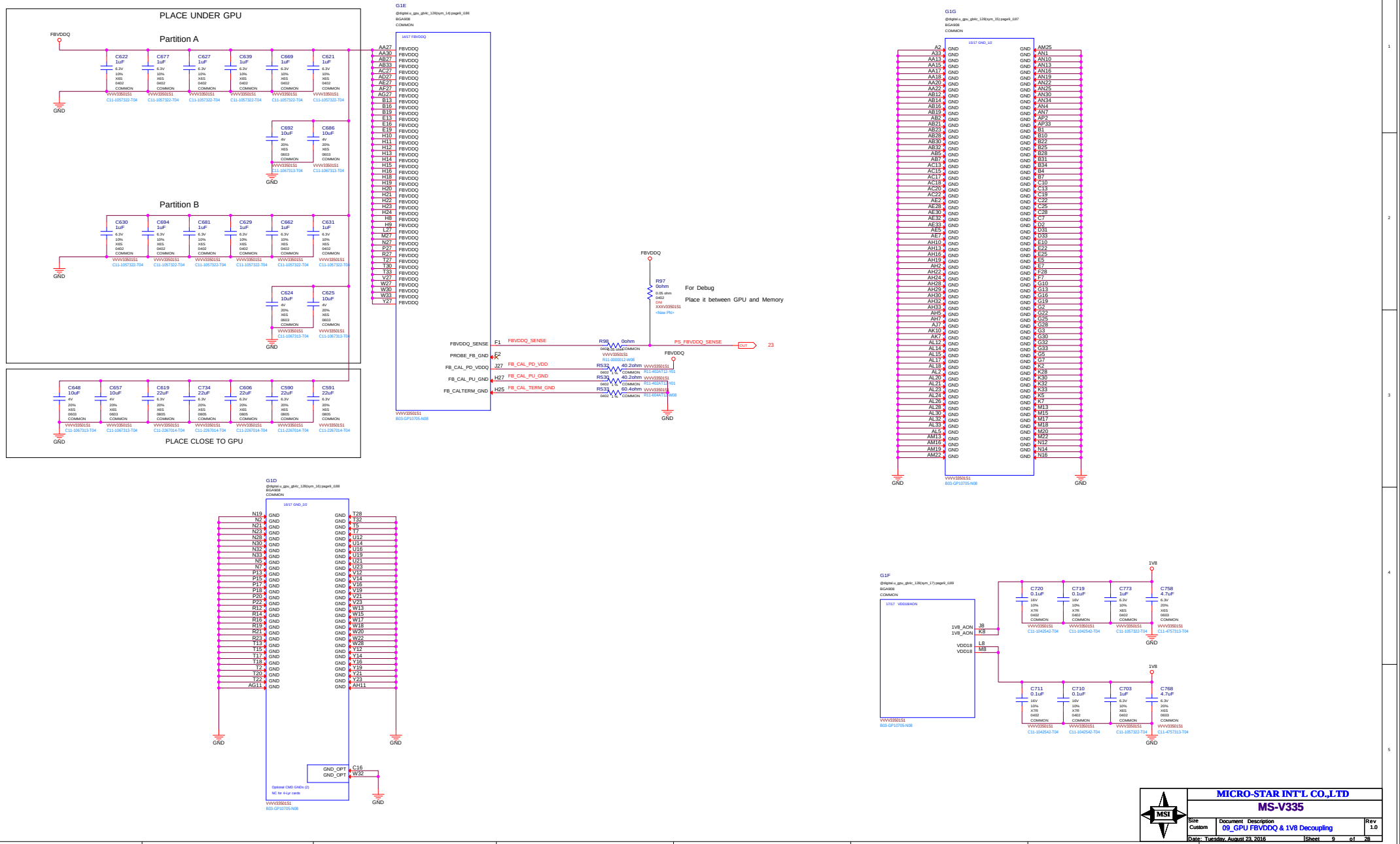

GPU NVVDD & NVVDDS Decoupling

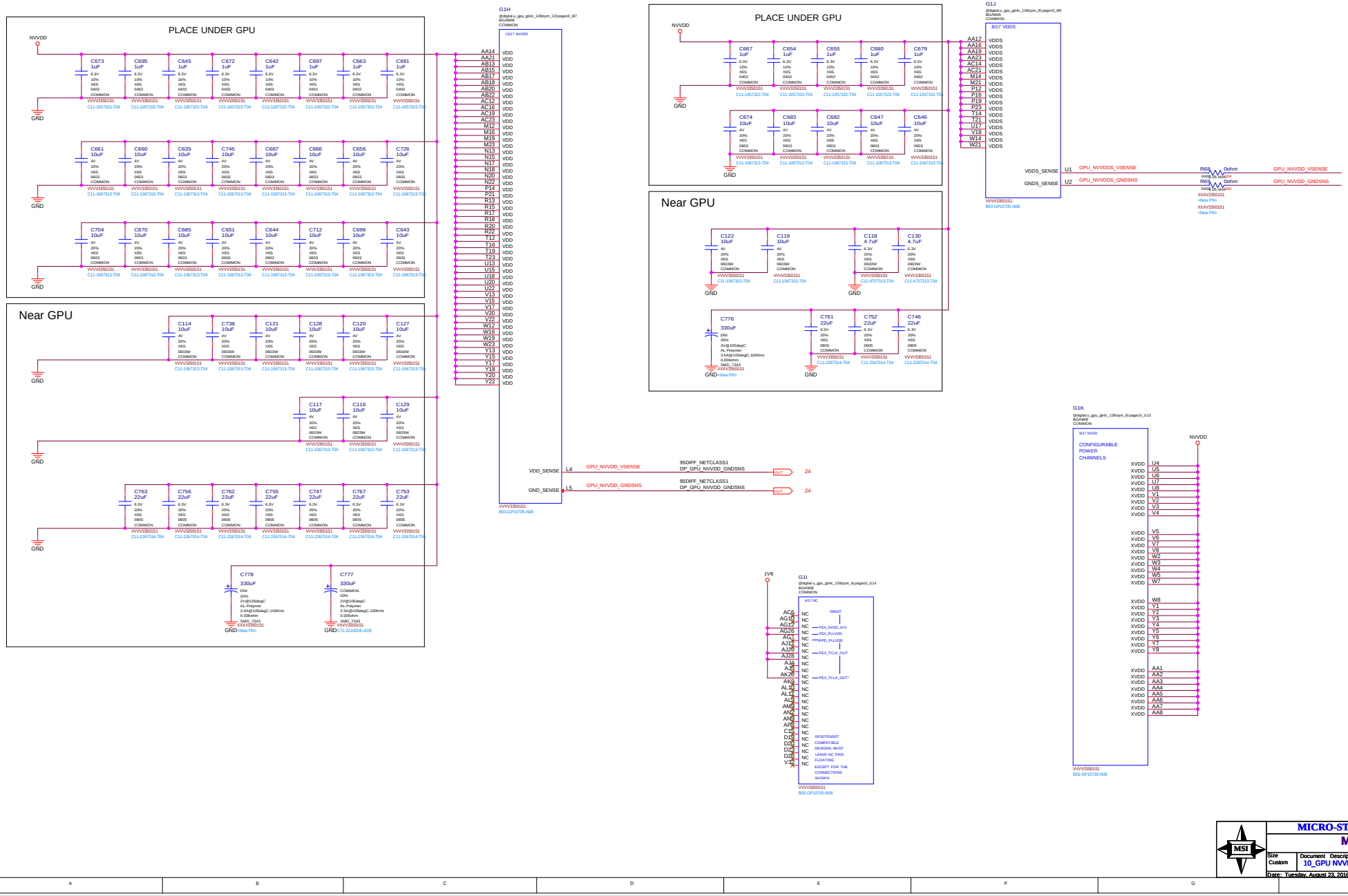

IFPAB DVI-DL

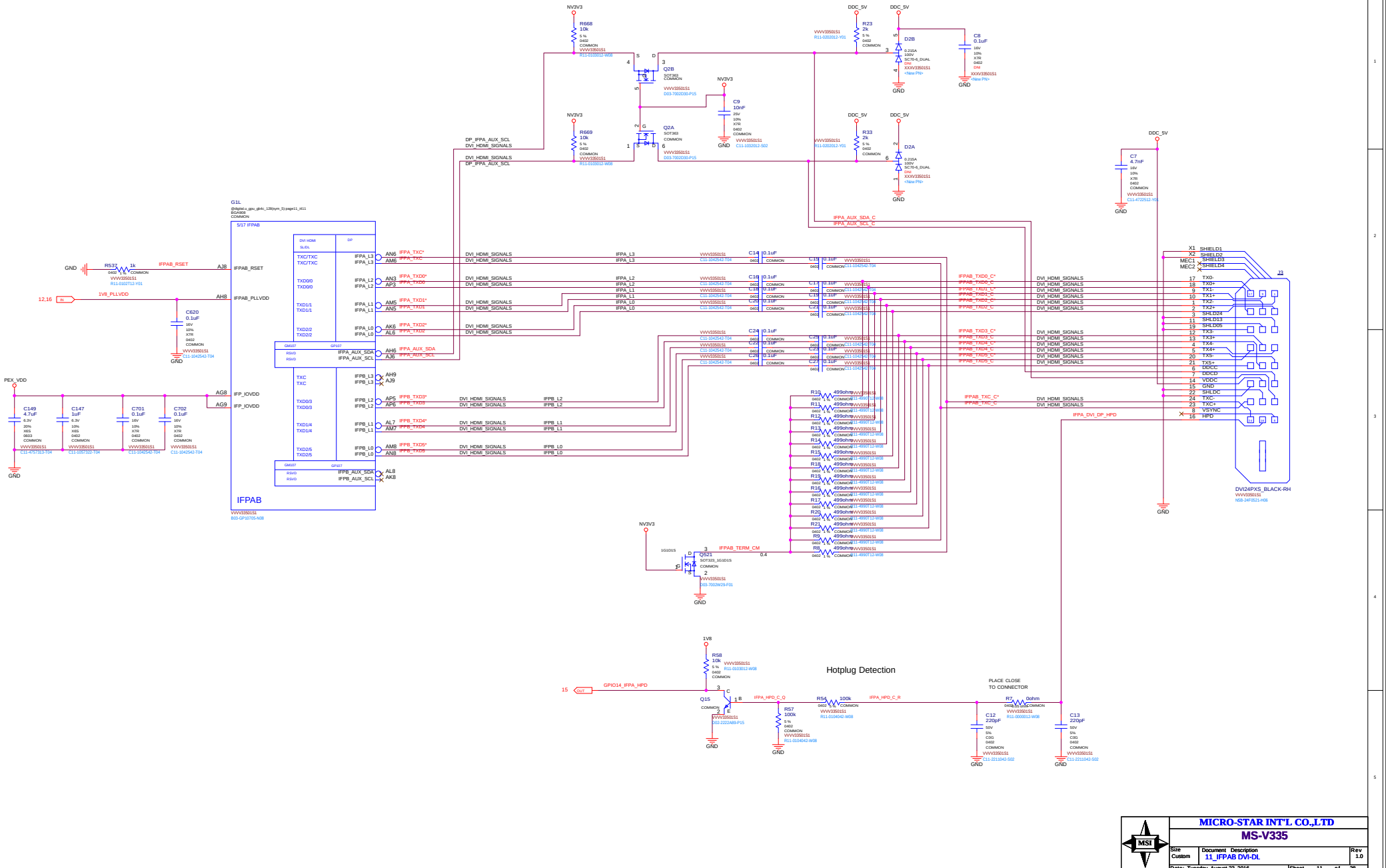

MICRO-STAR INT'L CO.,LTD			
MS-V335			
Size: Custom	Document Description: 11_IFPAB DVI-DL		Rev: 1.0
Date: Tuesday, August 23, 2016		Sheet 11 of 28	

IFPD DP

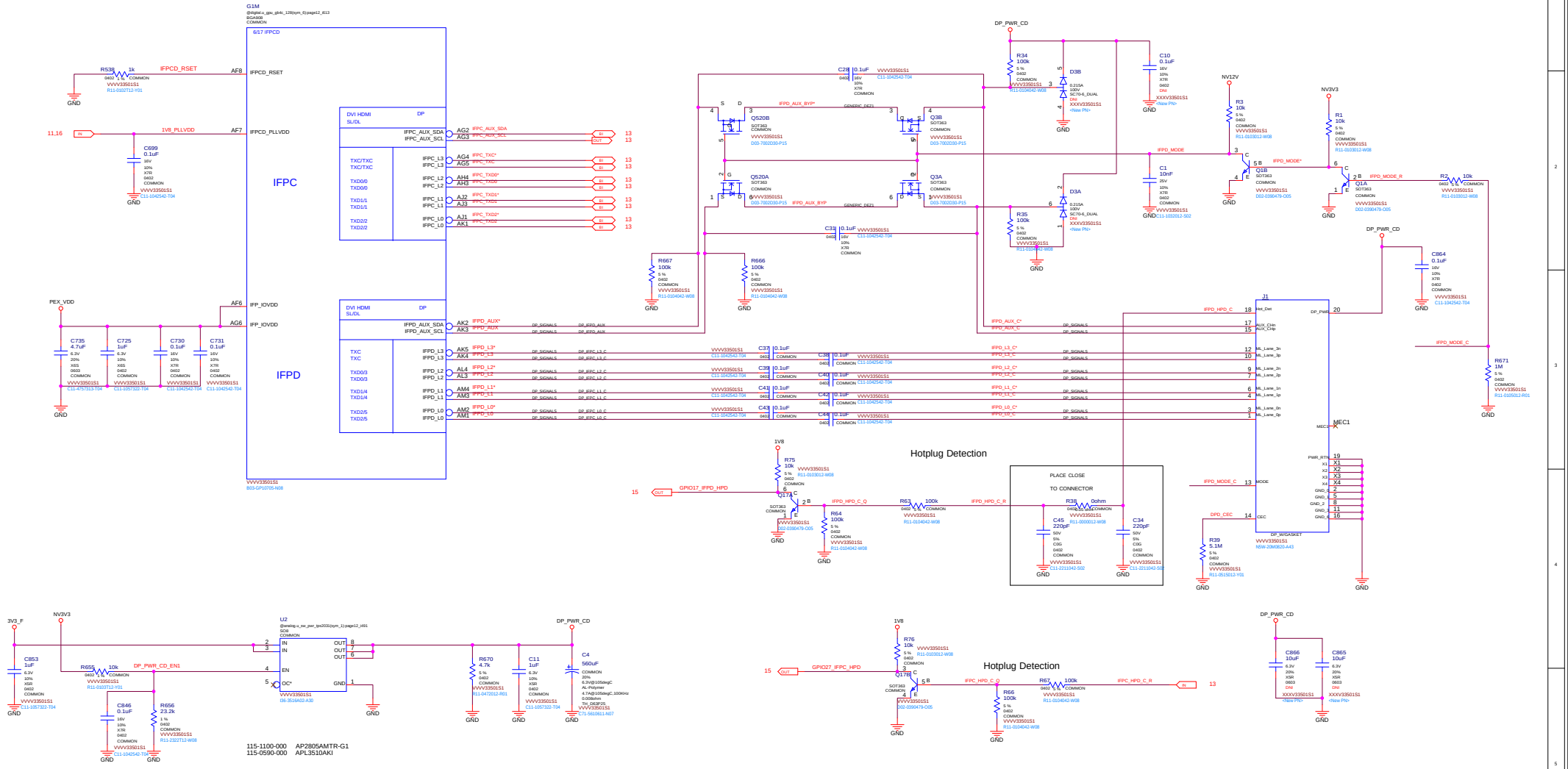
G1M
6/17 IFPCD
IFPC
IFPD
DVI HDMI SL/DL
DP
IFPCD_RSET
IFPCD_PLLVDD
1V8_PLLVDD
IFPC_AUX_SDA
IFPC_AUX_SCL
IFPD_AUX_SDA
IFPD_AUX_SCL
PEX_VDD
IFP_IOVDD
DP_PWR_CD
Hotplug Detection
PLACE CLOSE
TO CONNECTOR
GPIO17_IFPD_HPD
GPIO27_IFPC_HPD
MEC1
J1
NV12V
NV3V3
3V3_F
DP_PWR_CD_EN1
115-1100-000 AP2805AMTR-G1
115-0590-000 APL3510AKI

IFPC HDMI

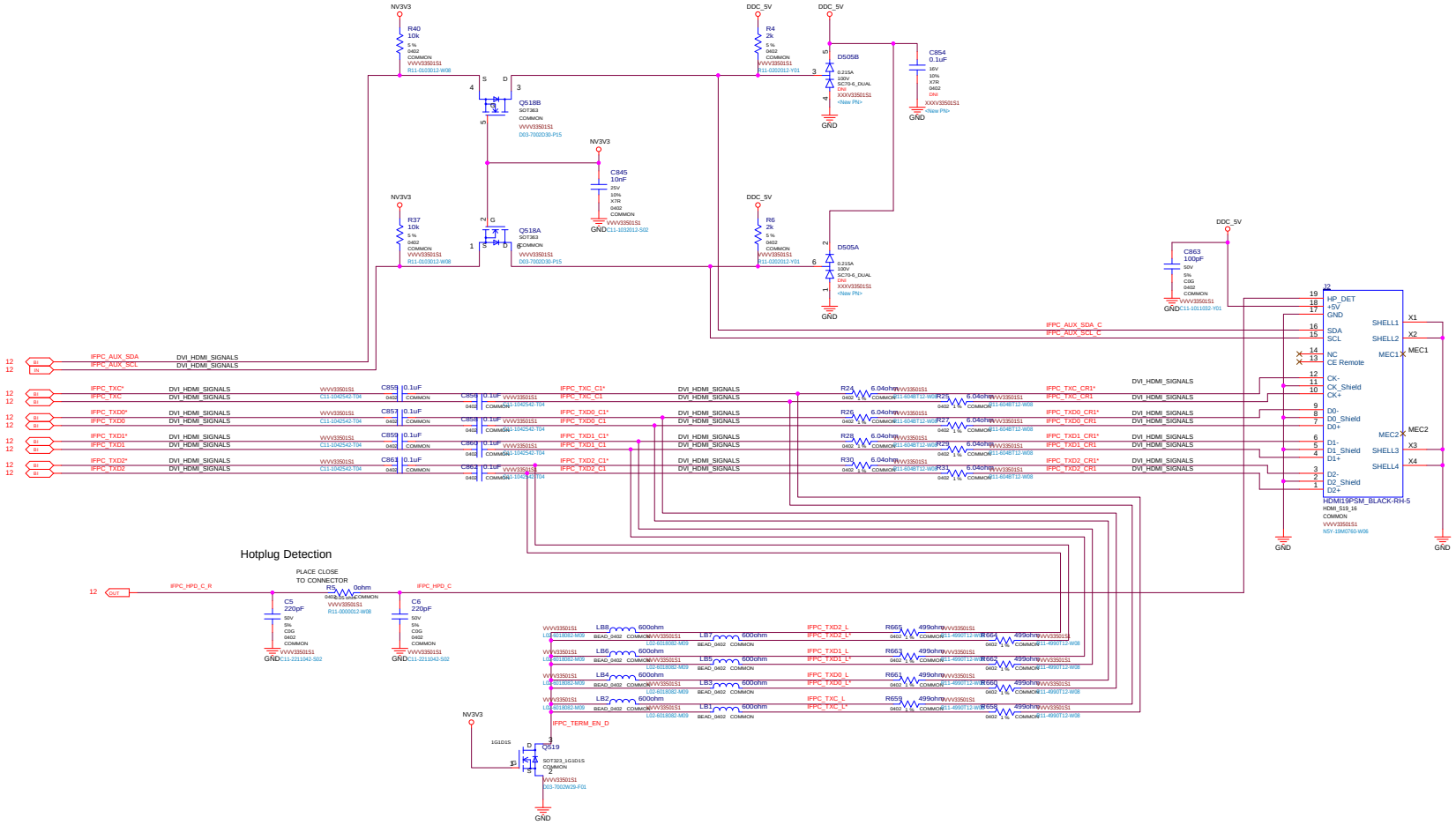
Hotplug Detection
PLACE CLOSE TO CONNECTOR
HDMI19PSM_BLACK-RH-5
MICRO-STAR INT'L CO.,LTD
MS-V335
13_IFPC HDMI
Rev 1.0
Date: Tuesday, August 23, 2016
Sheet 13 of 28

IFPEF UNUSED

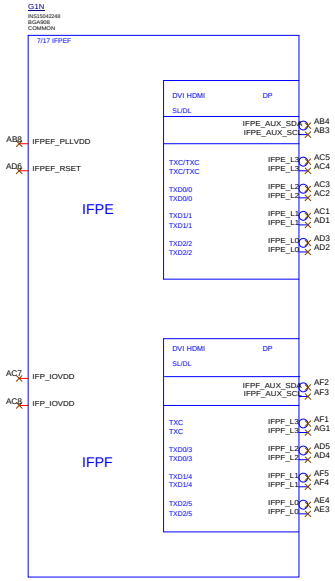

MICRO-STAR INT'L CO.,LTD	
MS-V335	
Size: Custom	Document Description: 14_IFPEF UNUSED
Rev: 1.0	
Date: Tuesday, August 23, 2016	Sheet 14 of 28

MISC1: GPIO, Fan, Thermal, JTAG

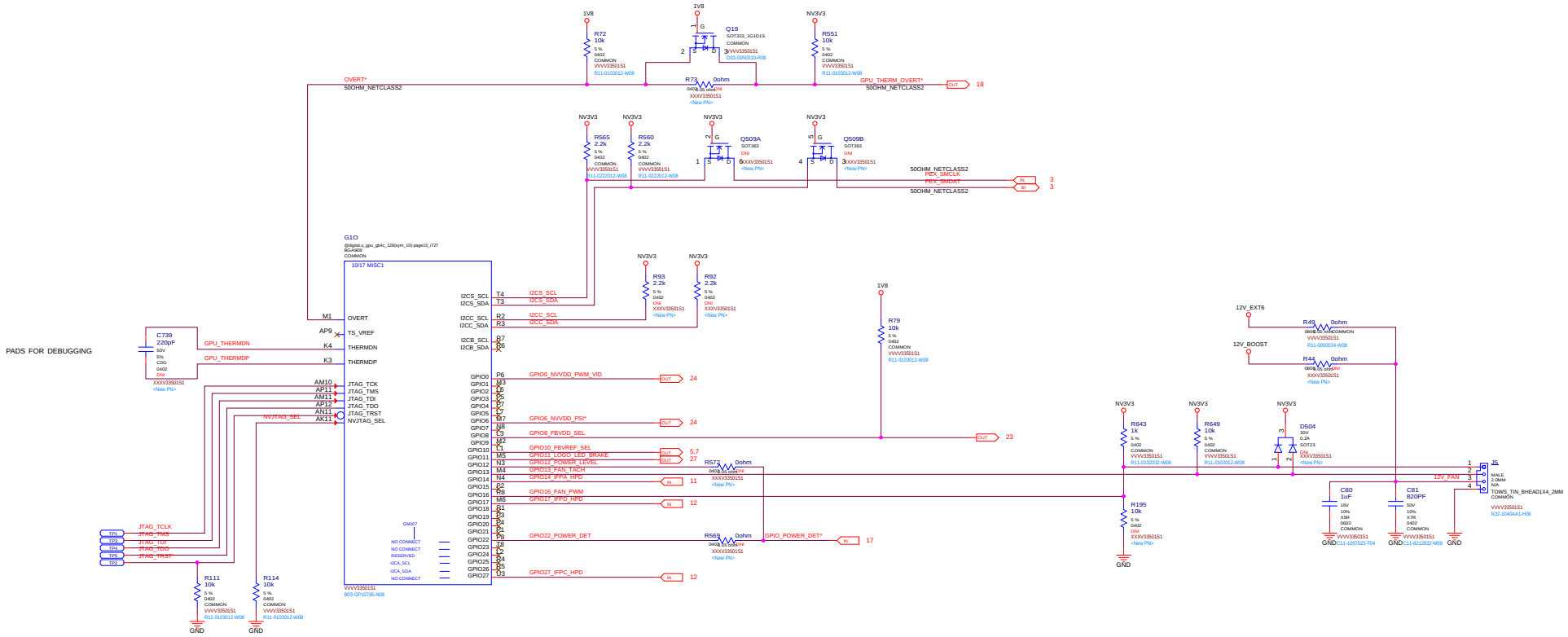

MICRO-STAR INT'L CO.,LTD	
MS-V335	
Size: Custom	Document Description: 15_MISC1: GPIO, Fan, Thermal, JTAG
Rev: 1.0	
Date: Tuesday, August 23, 2016	Sheet 15 of 28

MISC2: ROM, XTAL, Straps

ROM_SO	ROM_SI	ROM_SCLK	SOR_EXPOSED[3:0]	1:ENABLE 0:DISABLE
L	L	L	1111	Default
L	L	H	1110	
L	H	L	1101	
L	H	H	1100	
H	L	L	1011	
H	L	H	1010	
H	H	L	1001	
H	H	H	1000	
L	L	M	0111	
L	M	L	0110	
L	M	H	0101	
L	H	M	0100	
H	L	M	0011	
H	M	L	0010	
H	M	H	0001	
H	H	M	0000	

STRAP2	STRAP1	STRAP0	RAMCFG[4:0]	
L	L	L	0000	Samsung B-Die 8Gb 256Mx32
L	L	H	0001	Micron F-Die 8Gb 256Mx32
L	H	L	0010	Hynix M-Die 8Gb 256Mx32
L	H	H	0011	
H	H	L	0110	Hynix A-Die 4Gb 128Mx32
H	H	H	0111	Samsung E-Die 4Gb 128Mx32
L	L	M	1000	Micron B-Die 4Gb 128Mx32
L	M	L	1001	

STRAP5	STRAP4	STRAP3	SMB_ALT_ADDR	DEVID_SEL	PCIE_CFG	VGA_DEVICE
M	H	H	1	1	1	1
M	H	L	1	1	1	0
M	L	H	1	1	0	1
M	L	L	1	1	0	0
L	H	M	1	0	1	1
L	M	H	1	0	1	0
L	M	L	1	0	0	1
L	L	M	1	0	0	0
H	H	H	0	1	1	1
H	H	L	0	1	1	0
H	L	H	0	1	0	1
H	L	L	0	1	0	0
L	H	H	0	0	1	1
L	H	L	0	0	1	0
L	L	H	0	0	0	1 DEFAULT
L	L	L	0	0	0	0

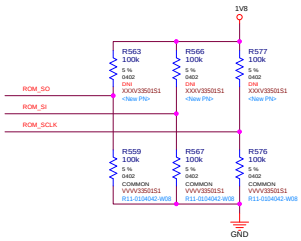

H=High :Tied to 1.8V
M=Middle:Tied to 0.9V
L=Low :Tied to 0V

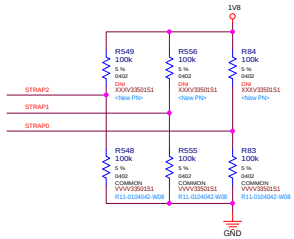

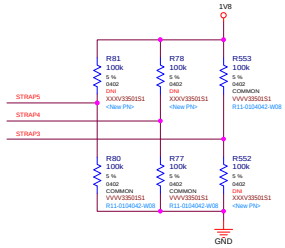

1:SMB_ALT_ADDR ENABLE
0:SMB_ALT_ADDR DISABLE

1:DEVID_SEL REBRAND
0:DEVID_SEL ORIGNAL

1:PCIE_CFG LOW POWER
0:PCIE_CFG HIGH POWER

1:VGA_DEVICE ENABLE
0:VGA_DEVICE DISABLE

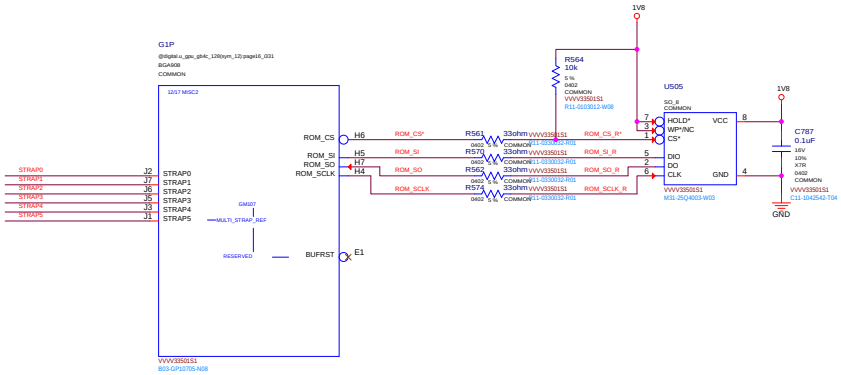

Smart Fan

XTALOUTBUFF	Volatge	SmartFan PWM	GPIO/PWM at the FAN
Low	0V	GPIO Disabled	100%
Middle	0.9V	66% PWM	33% PWM (Typical)
High	1.8V	33% PWM	66% PWM

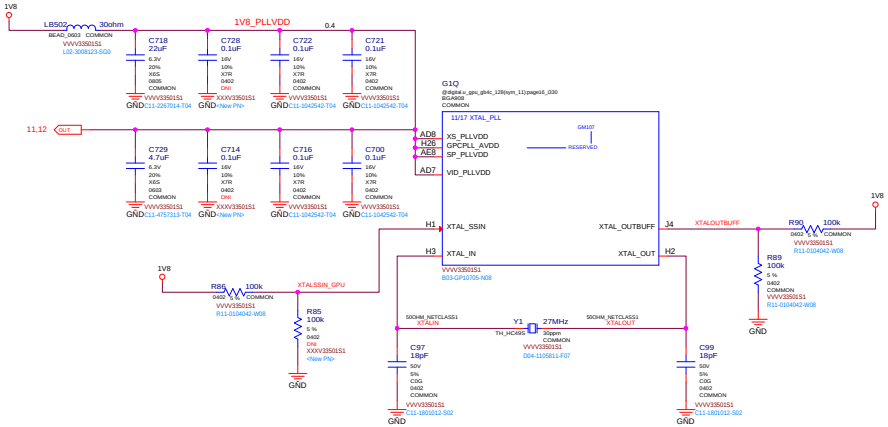

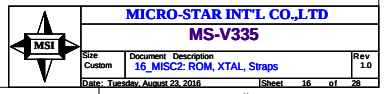

Power Inputs and Filtering

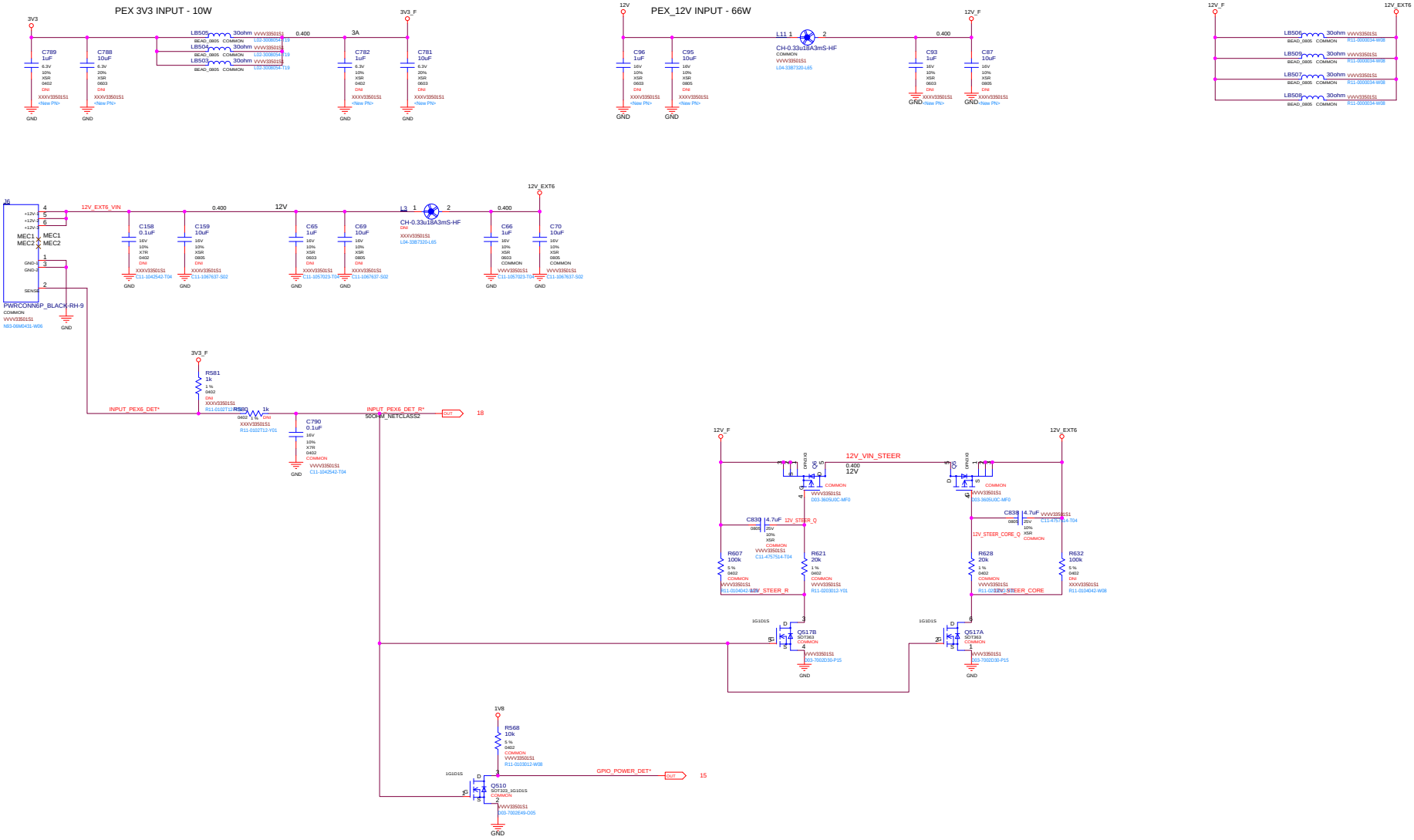

Power sequence

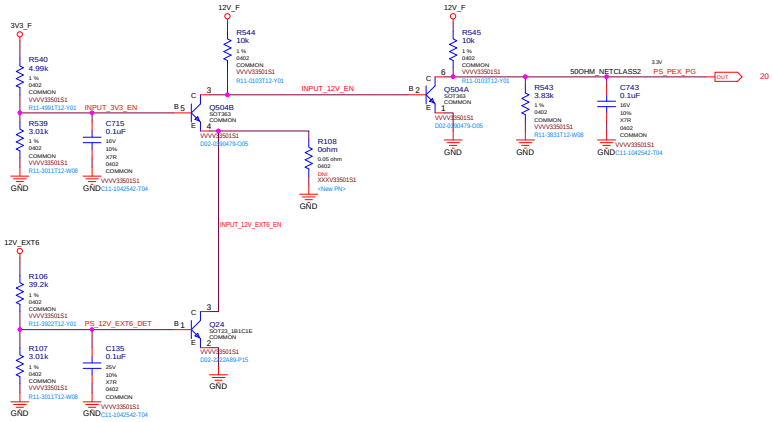

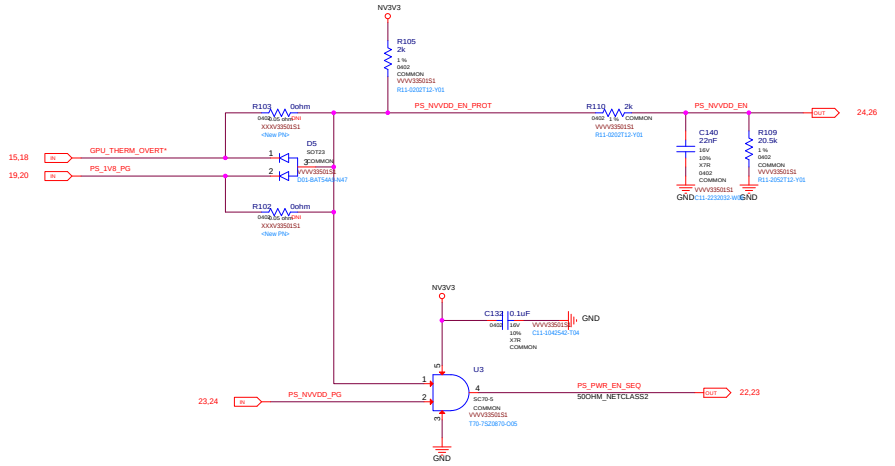

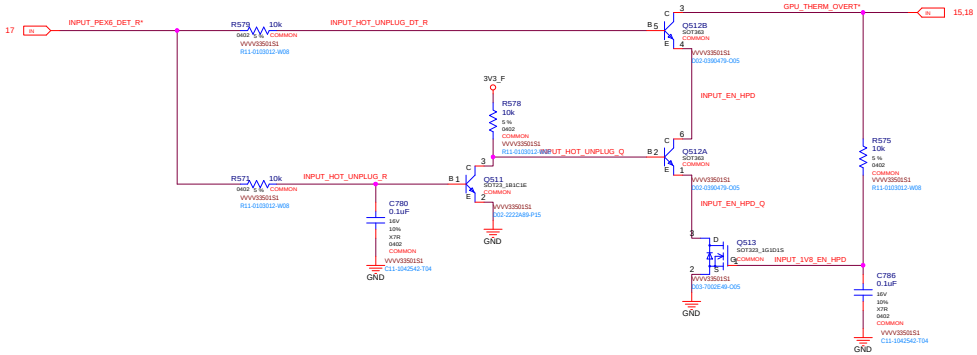

MICRO-STAR INT'L CO.,LTD			
MS-V335			
Size: Custom	Document Description: 18_Power sequence		Rev: 1.0
Date: Tuesday, August 23, 2016		Sheet 18 of 28	

PS: NV3V3 & NV12V

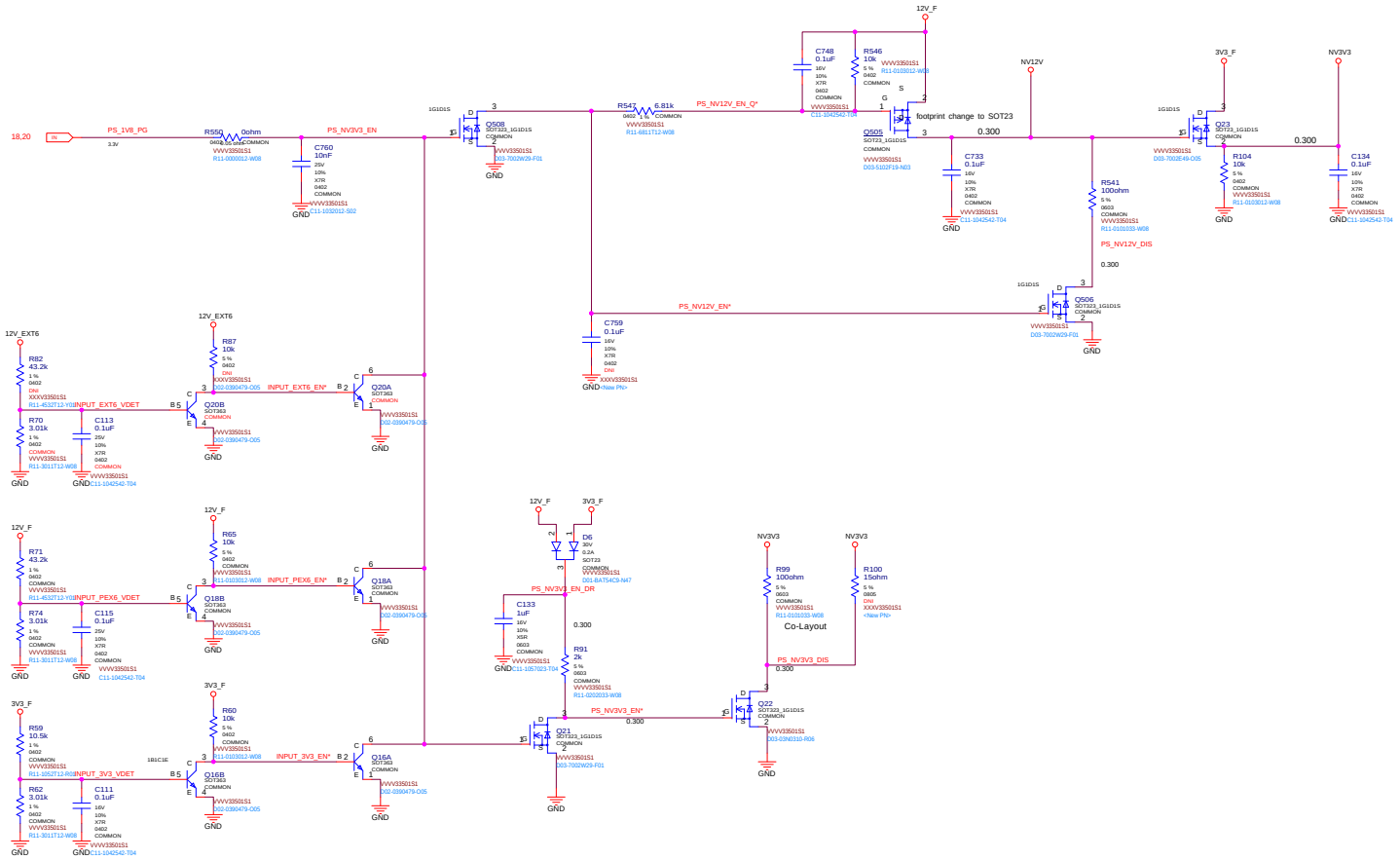

MICRO-STAR INT'L CO.,LTD			
MS-V335			
Size: Custom	Document Description: 19_PS: NV3V3 & NV12V		Rev: 1.0
Date: Tuesday, August 23, 2016		Sheet 19 of 28	

PS I: 1V8

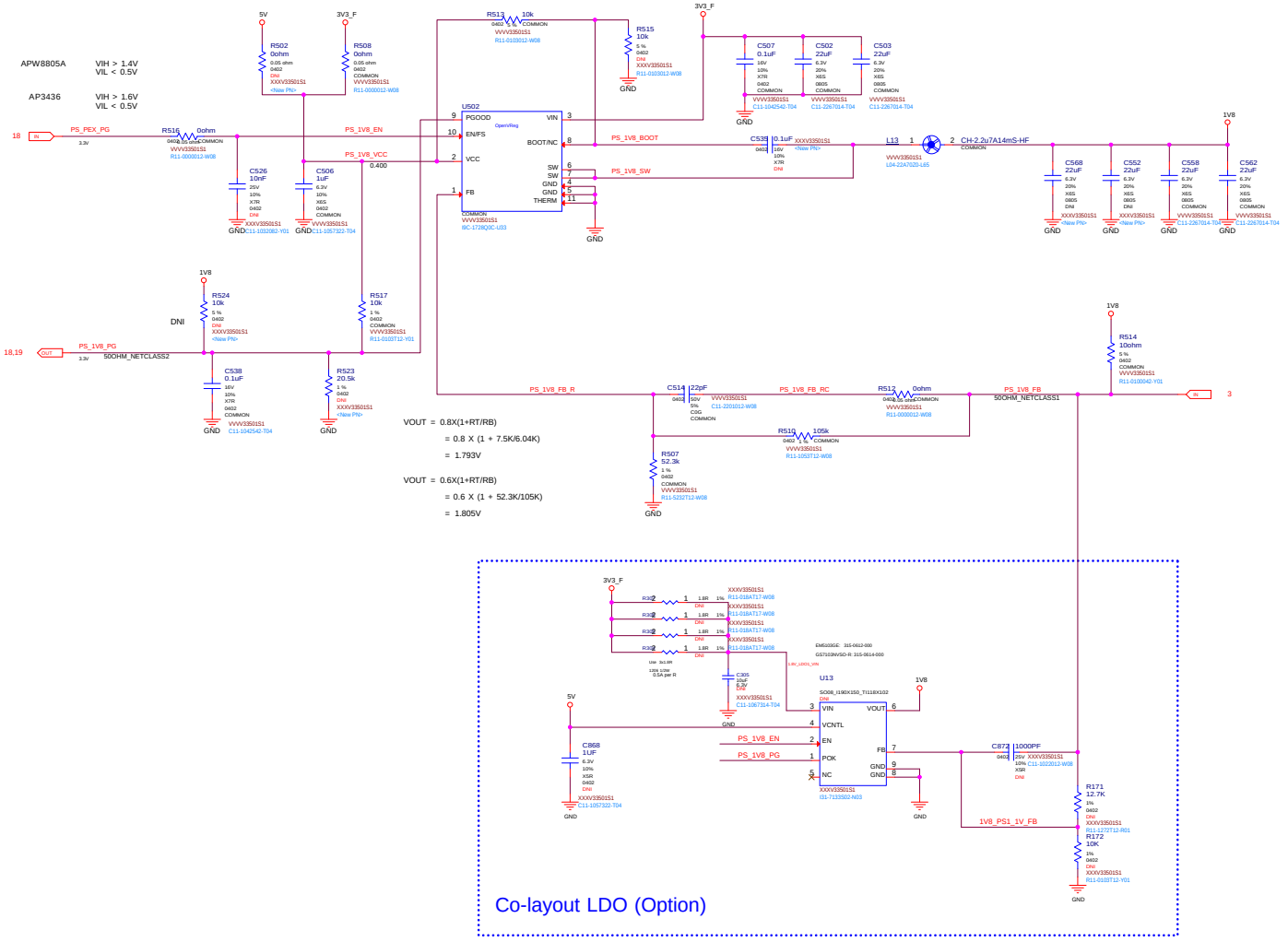

MICRO-STAR INT'L CO.,LTD			
MS-V335			
Size: Custom	Document Description: 20_PS I: 1V8		Rev: 1.0
Date: Tuesday, August 23, 2016		Sheet 20 of 28	

PSII:5V & 12V_FAN

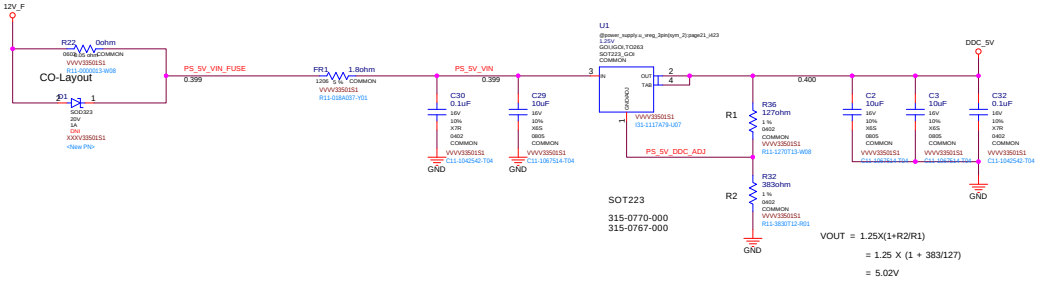

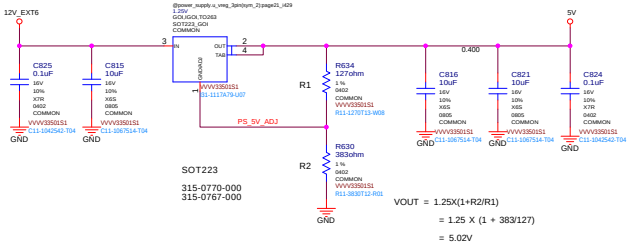

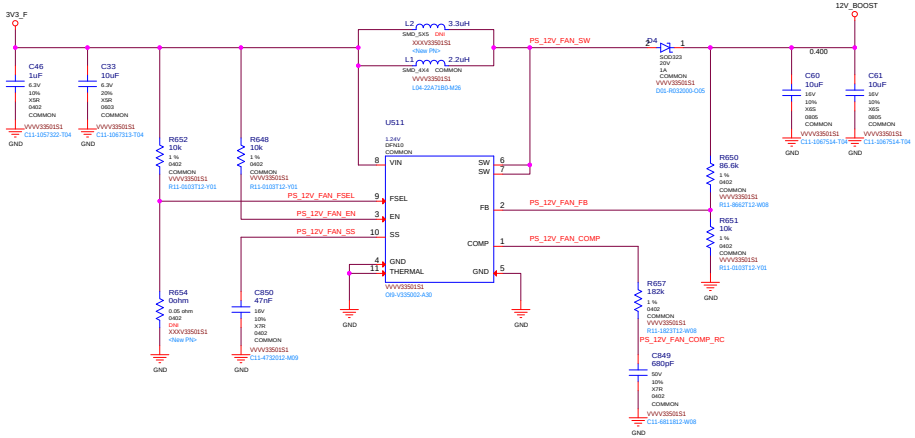

MICRO-STAR INT'L CO.,LTD		
MS-V335		
Size: Custom	Document Description: 21_PSII:5V & 12V_FAN	Rev: 1.0
Date: Tuesday, August 23, 2016	Sheet 21 of 28	

PS III: PEXVDD

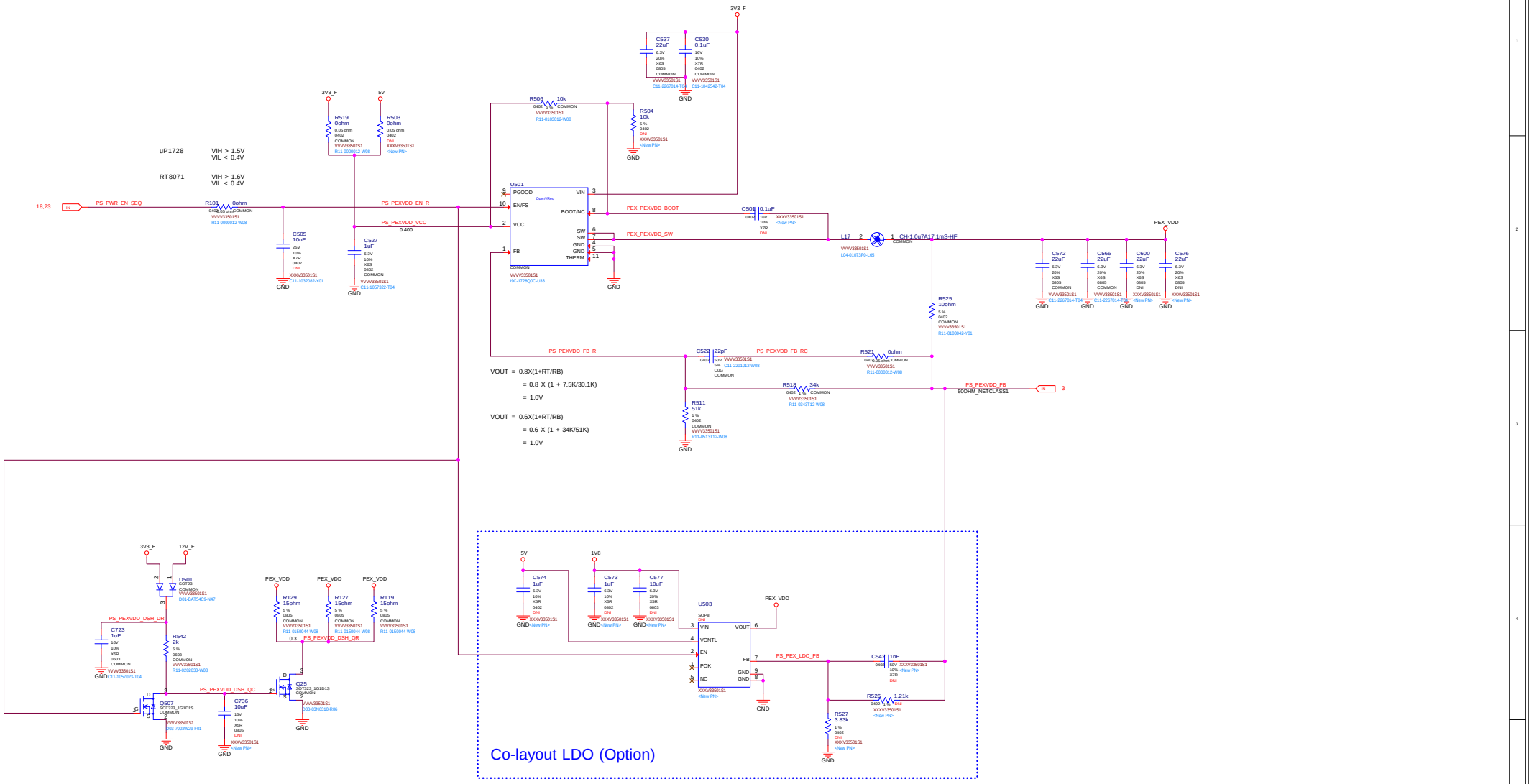

MICRO-STAR INT'L CO.,LTD			
MS-V335			
Size: Custom	Document Description: 22_PS III: PEXVDD		Rev: 1.0
Date: Tuesday, August 23, 2016		Sheet 22 of 28	

PS IV: FBVDDQ

FBVDDQ_CTL	FBVDDQ	Non-DVS
X	1.5V	<= DEFAULT

FBVDDQ_CTL	FBVDDQ	For DVS
0	1.35V	
1	1.5V/1.55V	<= DEFAULT

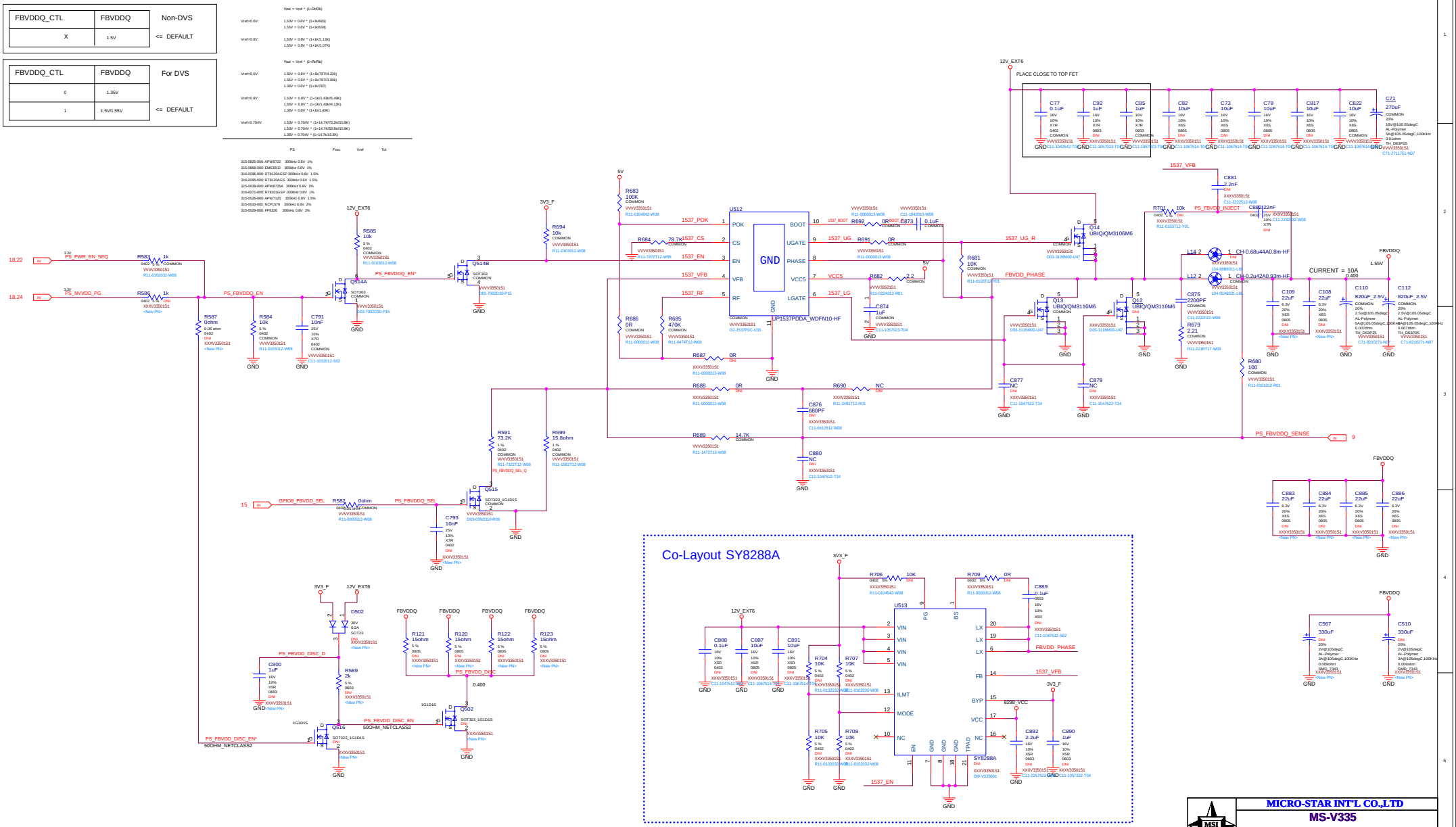

MICRO-STAR INT'L CO.,LTD

MS-V335

Size	Document Description	Rev
Custom	23_PS IV: FBVDDQ	1.0

Date: Tuesday, August 23, 2016 Sheet 23 of 28

PS V: NVVDD OVR2+1

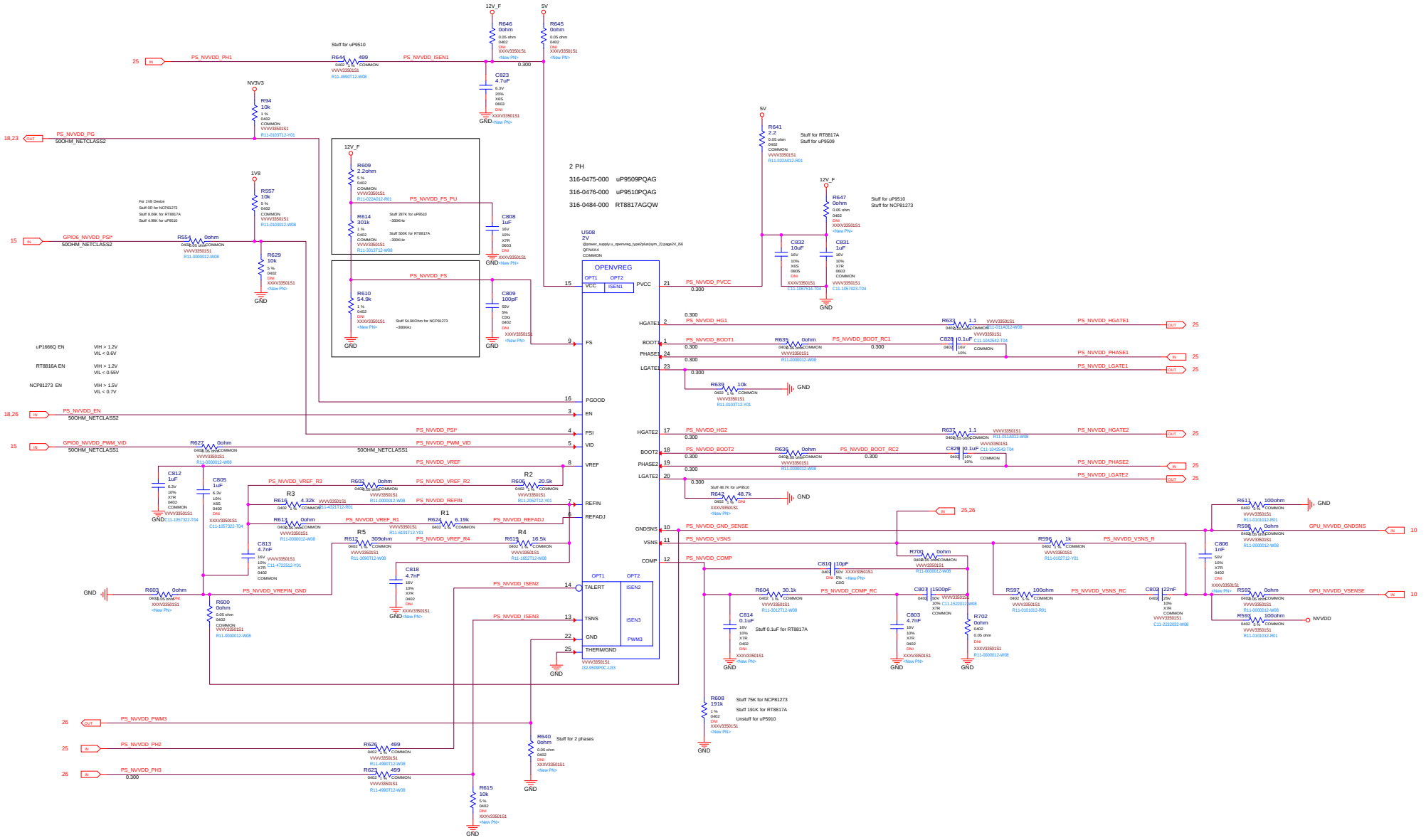

PS V: NVVDD Phase 1,2

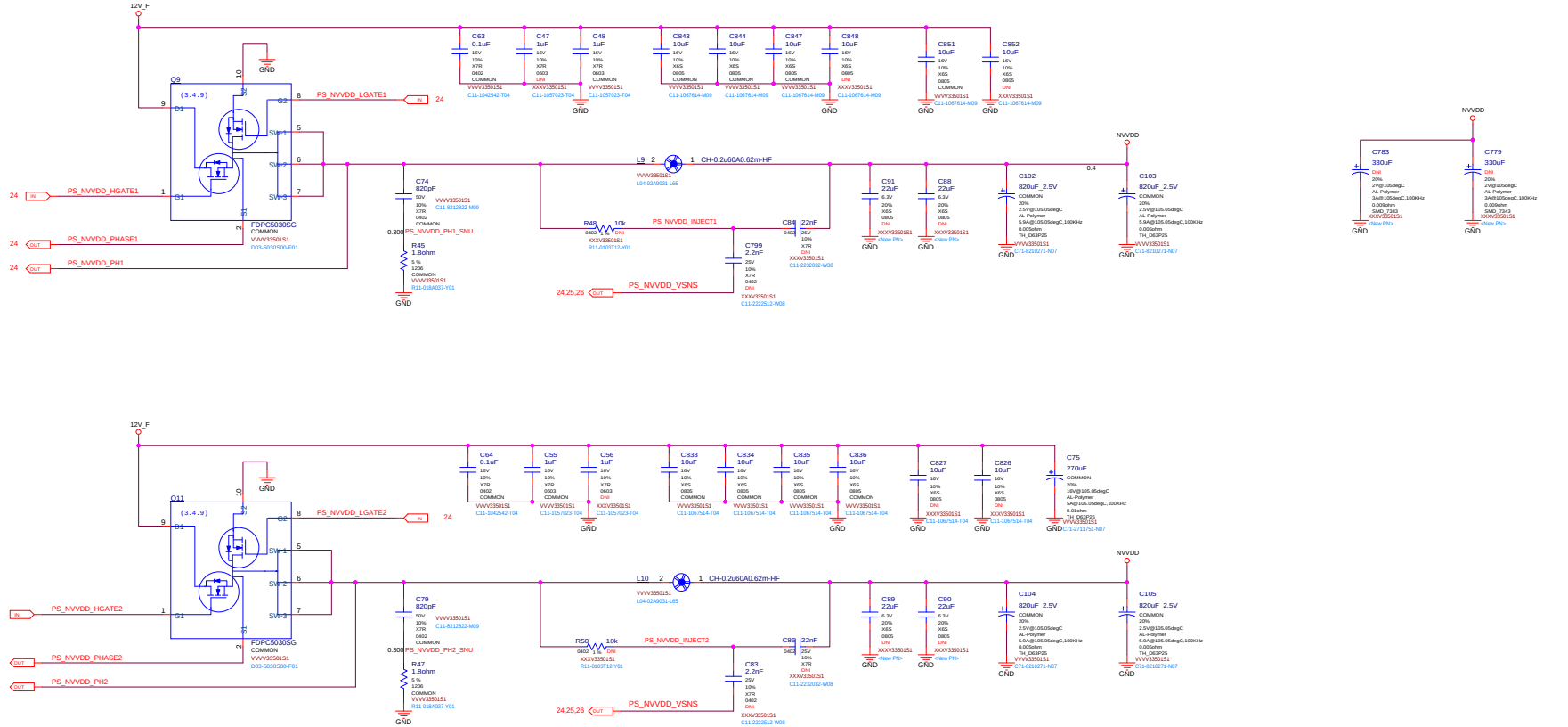

MICRO-STAR INT'L CO.,LTD		
MS-V335		
Size: Custom	Document Description: 25_PS V: NVVDD Phase 1,2	Rev: 1.0
Date: Tuesday, August 23, 2016	Sheet 25 of 28	

PS V: NVVDD Phase 3

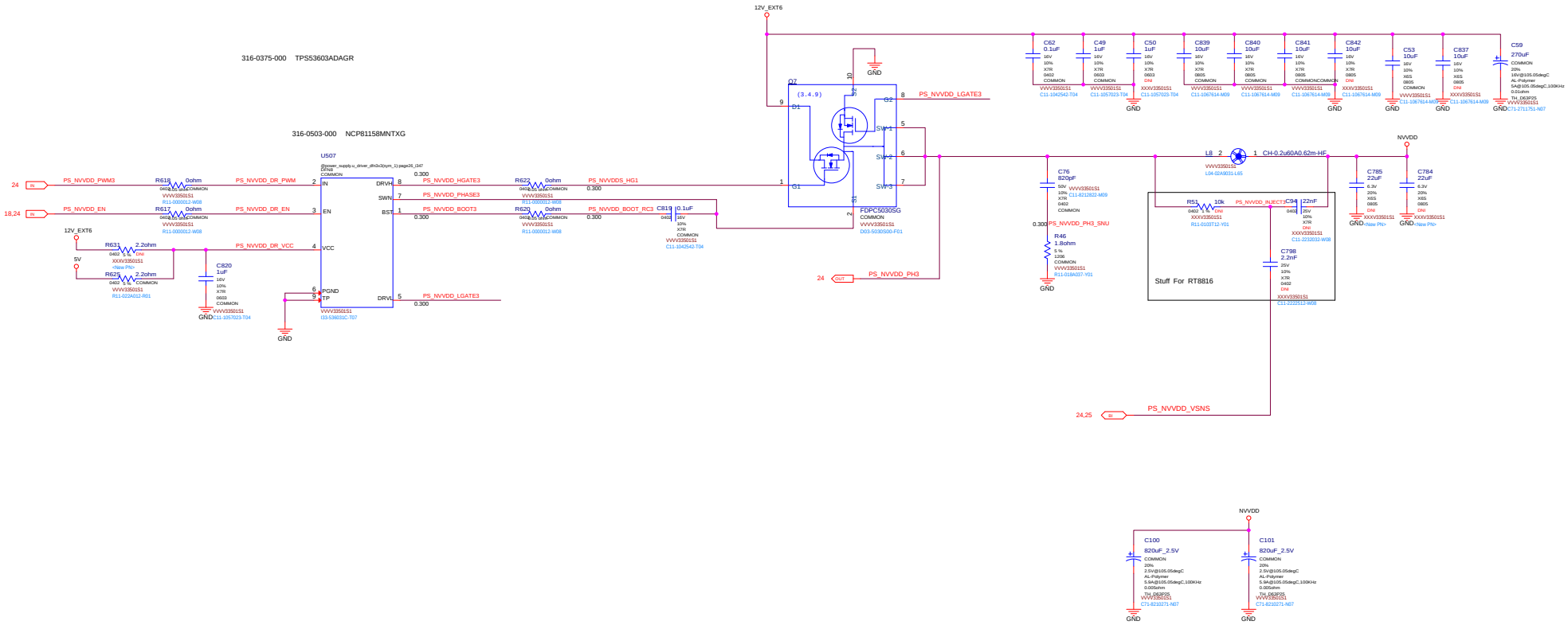

Logo LED

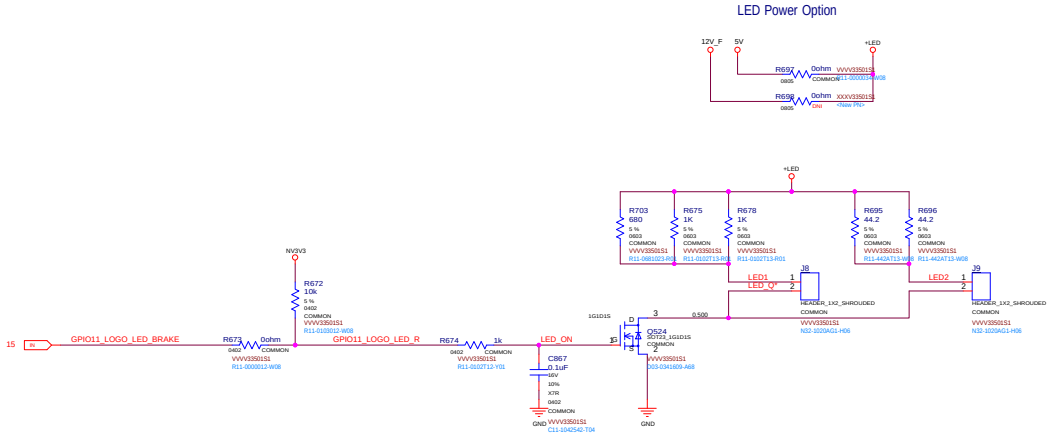

MICRO-STAR INT'L CO.,LTD		
MS-V335		
Size: Custom	Document Description: 27_Logo LED	Rev: 1.0
Date: Tuesday, August 23, 2016	Sheet 27 of 28	

Mechanical: Bracket/Thermal Solution

Brackets:

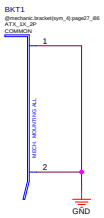

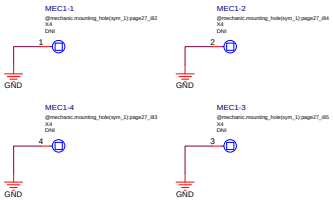

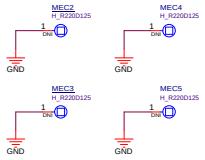

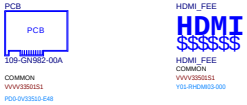

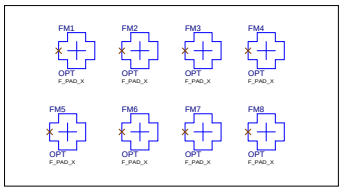

MICRO-STAR INT'L CO.,LTD			
MS-V335			
Size: Custom	Document Description: 28_Mechanical: Bracket/Thermal Solution		Rev: 1.0
Date: Tuesday, August 23, 2016		Sheet 28 of 28	