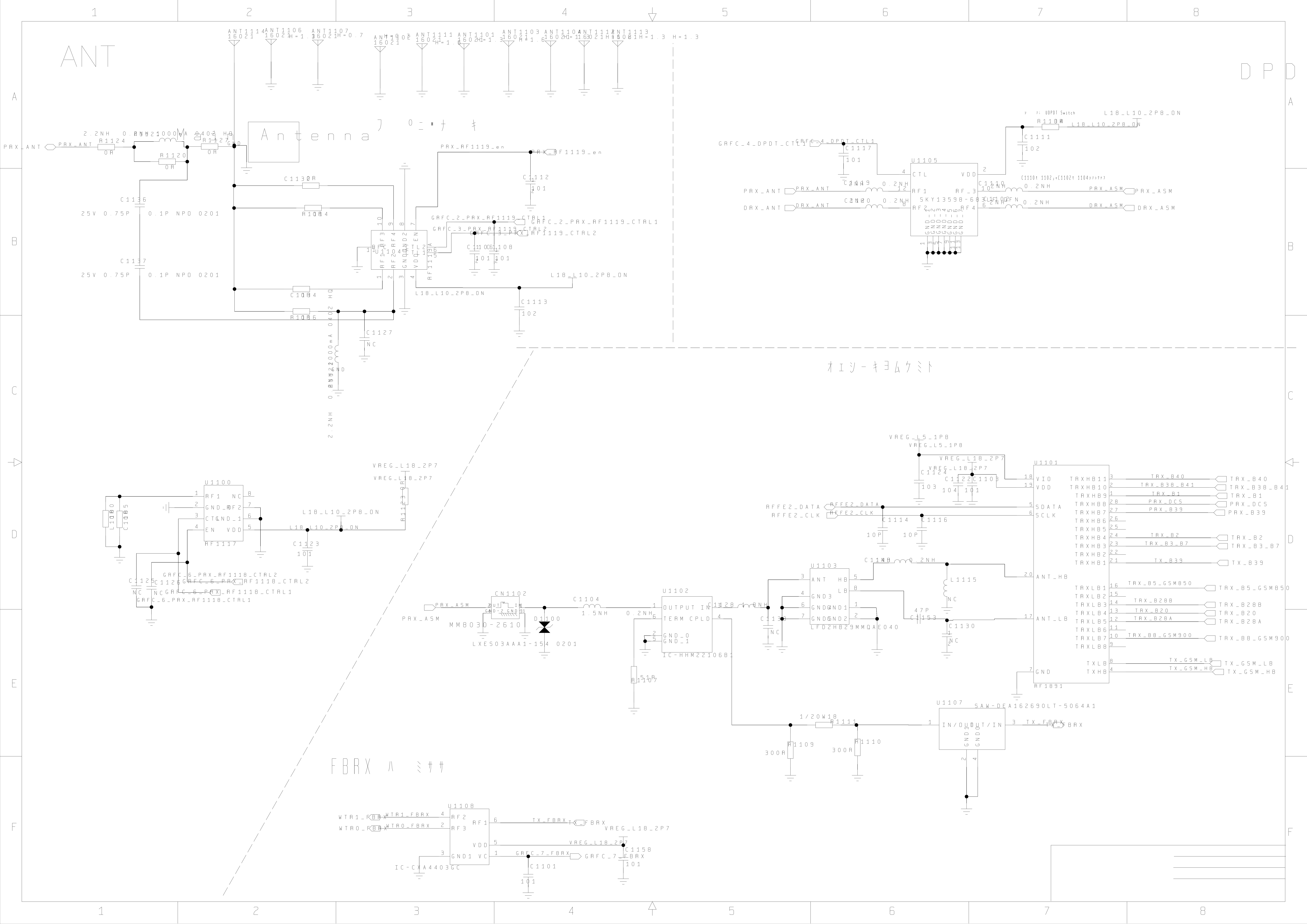
ANT
DPD
Antenna
ANT1114 16021
ANT1106 16021 H=1.3
ANT1107 16021 H=0.7
ANT1102 16021
ANT1111 16021 H=1
ANT1101 16021 H=1.3
ANT1103 16021 H=1.6
ANT1104 16021 H=1.6
ANT1112 16021 H=1.3
ANT1113 16021 H=1.3
PRX_ANT
R1124 0R
2.2NH 0.2NH 1000mA 0402 H0
R1127 0R
R1120 0R
C1136 25V 0.75P 0.1P NPO 0201
C1137 25V 0.75P 0.1P NPO 0201
C1132 0R
R1004
C1004
R1006
C1127 NC
2.2NH 0.2NH 1000mA 0402 H0
U1104 RF1119A
RF1 RF2 RF3 RF4 GND GND2 VDD CTL1 CTL2 EN
PRX_RF1119_en
C1112 101
GRFC_2_PRX_RF1119_CTRL1
GRFC_3_PRX_RF1119_CTRL2
C1106 C1108 101 101
L18_L10_2P8_ON
C1113 102
GRFC_4_DPDT_CTL1
C1117 101
R1108
C1111 102
U1105 SKY13598-683
CTL VDD RF1 RF2 RF_3 RF4
C1119 0.2NH
C1120 0.2NH
C1110 0.2NH
C1102 0.2NH
PRX_ANT
DRX_ANT
PRX_ASM
DRX_ASM
C1110t 1102,rC1102t 1104ｿﾞｳｶﾞｲ
ｵｴｼｰｷﾖﾑｹﾐﾄ
U1100 RF1117
RF1 GND_0 CTL EN NC RF2 GND_1 VDD
L1080 C1085
VREG_L18_2P7
R1123 0R
L18_L10_2P8_ON
C1123 101
C1125 NC
C1126 NC
GRFC_6_PRX_RF1118_CTRL2
GRFC_6_PRX_RF1118_CTRL1
VREG_L5_1P8
C1124 103
C1122 104
C1103 101
U1101 RF1891
VIO VDD SDATA SCLK ANT_HB ANT_LB GND
RFFE2_DATA
RFFE2_CLK
C1114 10P
C1116 10P
TRXHB11 TRXHB10 TRXHB9 TRXHB8 TRXHB7 TRXHB6 TRXHB5 TRXHB4 TRXHB3 TRXHB2 TRXHB1
TRXLB1 TRXLB2 TRXLB3 TRXLB4 TRXLB5 TRXLB6 TRXLB7 TRXLB8
TXLB TXHB
TRX_B40
TRX_B38_B41
TRX_B1
PRX_DCS
PRX_B39
TRX_B2
TRX_B3_B7
TX_B39
TRX_B5_GSM850
TRX_B28B
TRX_B20
TRX_B28A
TRX_B8_GSM900
TX_GSM_LB
TX_GSM_HB
U1103 LFD2H829MMQAE040
ANT HB LB GND3 GND0 GND1 GND2
C1148 0.2NH
L1115 NC
47P C1153
C1130 NC
C1128 1.5NH
C1131 NC
CN1102 MM8030-2610
PRX_ASM
D1100 LXES03AAA1-154 0201
C1104 1.5NH
0.2NH
U1102 IC-HHM2210681
OUTPUT IN
TERM CPLD
GND_0
GND_1
R1107 51R
U1107 SAW-DEA162690LT-5064A1
IN/OUT OUT/IN GND GND
TX_FBRX
1/20W18
R1111
R1109 300R
R1110 300R
FBRX ﾊ ﾐｻｻ
U1108 IC-CXA4403GC
RF2 RF3 GND1 RF1 VDD VC
WTR1_FBRX
WTR0_FBRX
TX_FBRX
VREG_L18_2P7
GRFC_7_FBRX
C1158 101
C1101 101
1 2 3 4 5 6 7 8
A B C D E F

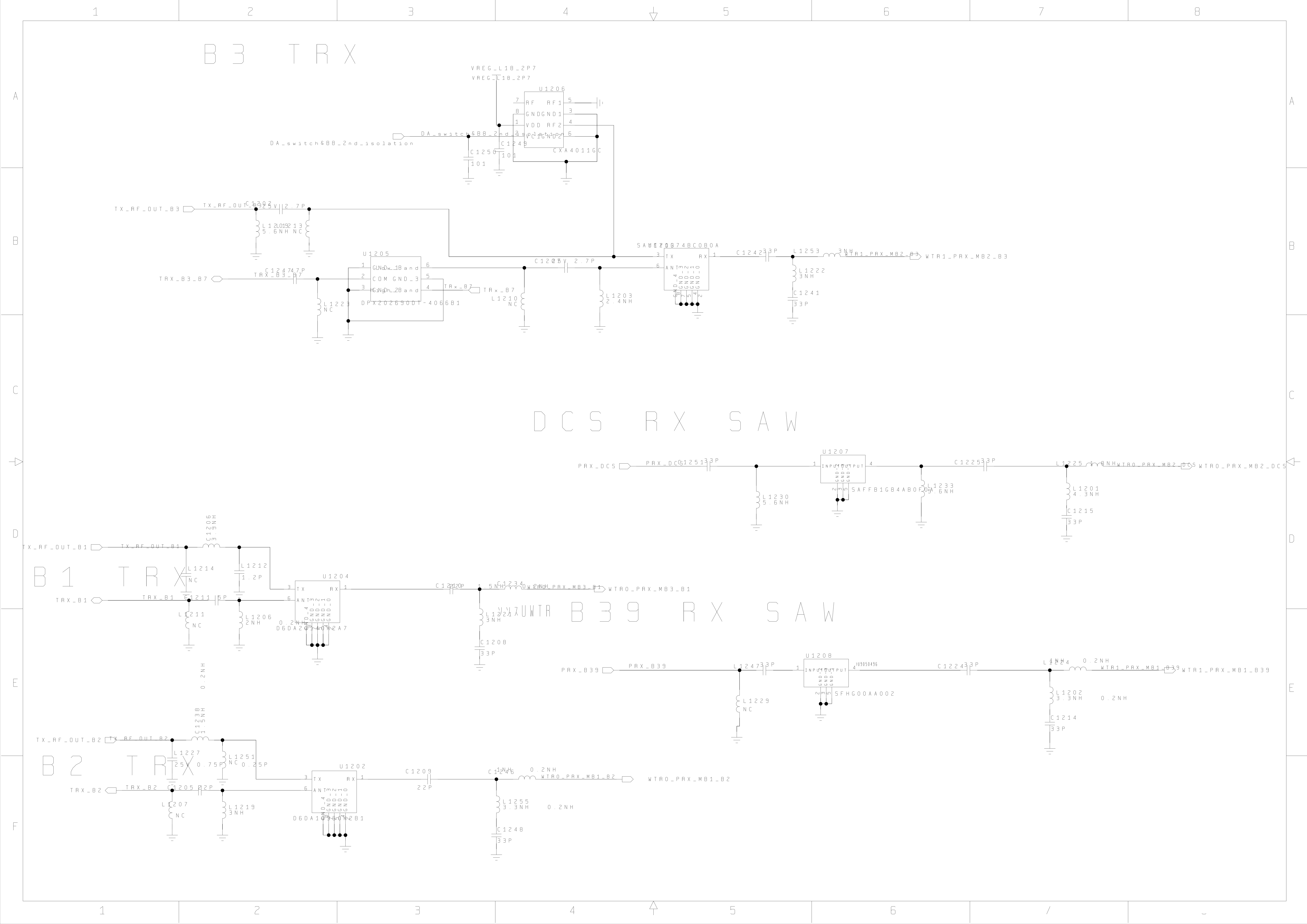
B3 TRX
VREG_L18_2P7
U1206
RF RF1
GNDGND1
VDD RF2
VC1GND2
CXA4011GC
DA_switch&B8_2nd_isolation
C1250
101
C1249
101
TX_RF_OUT_B3
C1202
2.7P
L1201
5.6NH
L1213
NC
U1205
DPX202690DT-406681
TRX_B3_B7
C1247
47P
L1223
NC
TRx_B7
L1210
NC
C1203
2.7P
L1203
2.4NH
SAW
TX
ANT
RX
C1242
33P
L1253
3NH
WTR1_PRX_MB2_B3
L1222
3NH
C1241
33P
DCS RX SAW
PRX_DCS
C1251
33P
L1230
5.6NH
U1207
INPUT
OUTPUT
SAFFB1G84AB0F0A
L1233
5.6NH
C1225
33P
L1225
NH
WTR0_PRX_MB2_DCS
L1201
4.3NH
C1215
33P
TX_RF_OUT_B1
C1206
3.9NH
L1214
NC
C1212
1.2P
B1 TRX
U1204
TX
RX
ANT
TRX_B1
C1211
5P
L1211
NC
L1206
2NH
0.2NH
D6DA2G140K2A7
C1212
20P
L1234
5NH
0.2NH
WTR0_PRX_MB3_B1
L1221
3NH
C1208
33P
B39 RX SAW
PRX_B39
L1247
33P
U1208
INPUT
OUTPUT
SFHG00AA002
C1224
33P
L1224
3NH
0.2NH
WTR1_PRX_MB1_B39
L1229
NC
L1202
3.3NH
0.2NH
C1214
33P
0.2NH
TX_RF_OUT_B2
C1238
1.5NH
L1227
25
0.75P
L1251
NC
0.25P
B2 TRX
U1202
TX
RX
ANT
TRX_B2
C1205
22P
L1207
NC
L1219
3NH
D6DA1G960K2B1
C1209
22P
C1246
1NH
0.2NH
WTR0_PRX_MB1_B2
L1255
3.3NH
0.2NH
C1248
33P
1
2
3
4
5
6
7
8
A
B
C
D
E
F

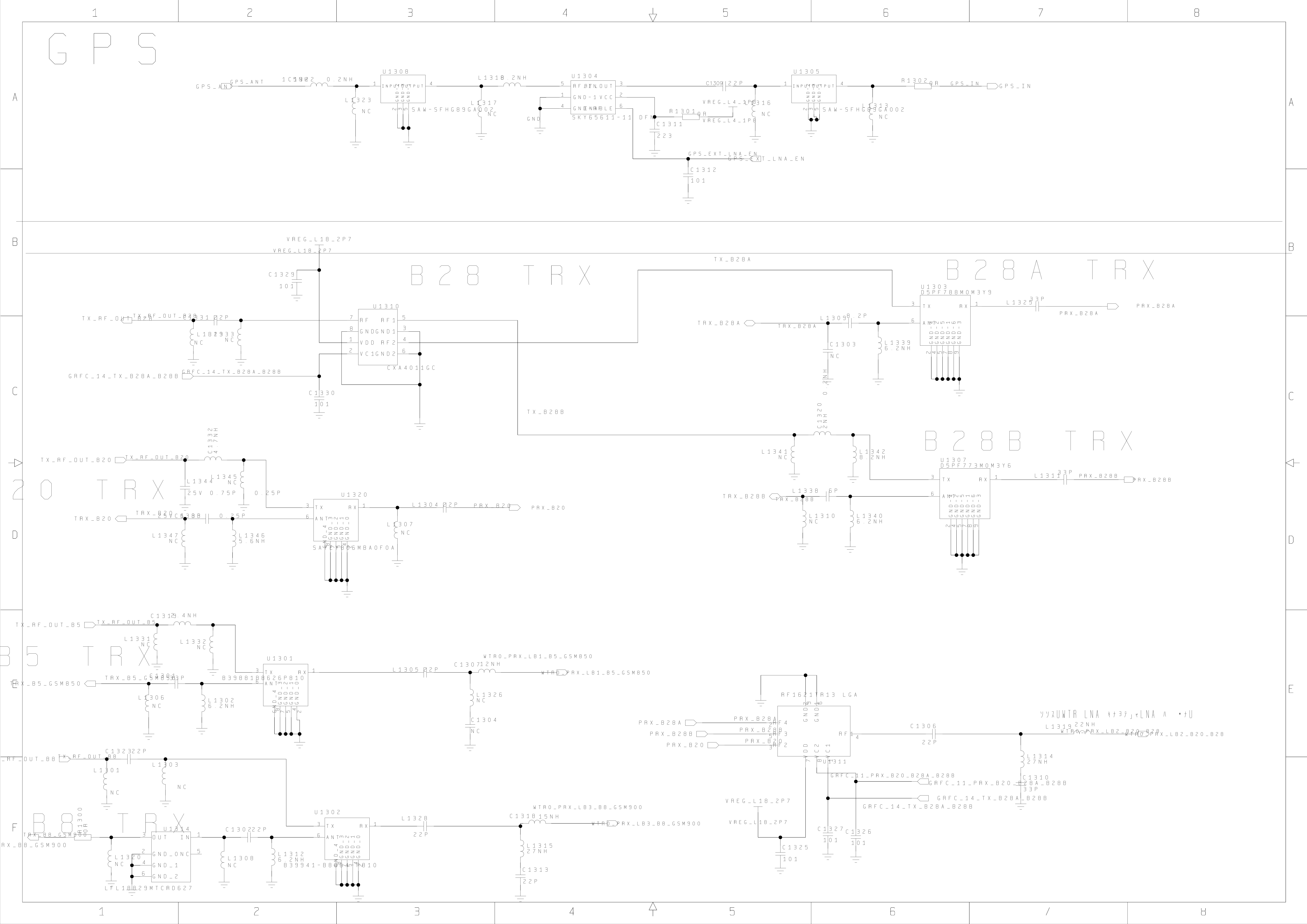
GPS
GPS_ANT
C1322 0.2NH
U1308 INPUT OUTPUT SAW-SFHG89GA002
L1323 NC
L1318 8.2NH
L1317 NC
U1304 RF IN RF OUT GND-1 VCC GND-2 ENABLE SKY65611-11 DFN
GND
C1309 22P
R1301 0R
C1311 223
VREG_L4_1P8
L1316 NC
U1305 INPUT OUTPUT SAW-SFHG89GA002
L1313 NC
R1302 0R
GPS_IN
GPS_EXT_LNA_EN
C1312 101
VREG_L18_2P7
C1329 101
B28 TRX
TX_B28A
B28A TRX
U1303 D5PF788M0M3Y9
TX RX ANT
L1325 33P
PRX_B28A
TRX_B28A
L1309 8.2P
C1303 NC
L1339 6.2NH
TX_RF_OUT_B28
C1331 22P
L1329 NC
L1333 NC
U1310 RF RF1 GND GND1 VDD RF2 VC1 GND2 CXA4011GC
GRFC_14_TX_B28A_B28B
C1330 101
TX_B28B
C1320 0.2NH
L1341 NC
L1342 8.2NH
B28B TRX
U1307 D5PF773M0M3Y6
L1311 33P
PRX_B28B
TRX_B28B
L1338 6P
L1310 NC
L1340 6.2NH
B20 TRX
TX_RF_OUT_B20
C1332 4.7NH
L1344 25V 0.75P
L1345 NC
0.25P
U1320 SAYEY806MBA0F0A
PRX_B20
L1304 22P
L1307 NC
TRX_B20
C1333 25V 0.25P
L1347 NC
L1346 5.6NH
B5 TRX
TX_RF_OUT_B5
C1319 9.4NH
L1331 NC
L1332 NC
U1301 B39881B8626P810
TRX_B5_GSM850
C1301 33P
L1306 NC
L1302 6.2NH
L1305 22P
C1307 12NH
WTR0_PRX_LB1_B5_GSM850
L1326 NC
C1304 NC
B8 TRX
TX_RF_OUT_B8
C1323 22P
L1301 NC
L1303 NC
U1302 B39941-B8634-P810
L1328 22P
C1318 15NH
WTR0_PRX_LB3_B8_GSM900
L1315 27NH
C1313 22P
TRX_B8_GSM900
R1300 0R
U1314 OUT IN GND_ONC GND_1 GND_2 LFL18829MTCR0627
L1320 NC
C1302 22P
L1308 NC
L1312 6.2NH
U1311 RF1621TR13 LGA
RF4 RF3 RF2 RF1 GND VDD VC2 VC1
PRX_B28A
PRX_B28B
PRX_B20
C1306 22P
L1319 22NH
WTR0_PRX_LB2_B20_B28
L1314 27NH
C1310 33P
GRFC_11_PRX_B20_B28A_B28B
GRFC_14_TX_B28A_B28B
VREG_L18_2P7
C1327 101
C1326 101
C1325 101
ｿｿｽUWTR LNA ｷﾅｺﾃﾞｬLNA ﾊ ･ﾅU
1 2 3 4 5 6 7 8
A B C D E F

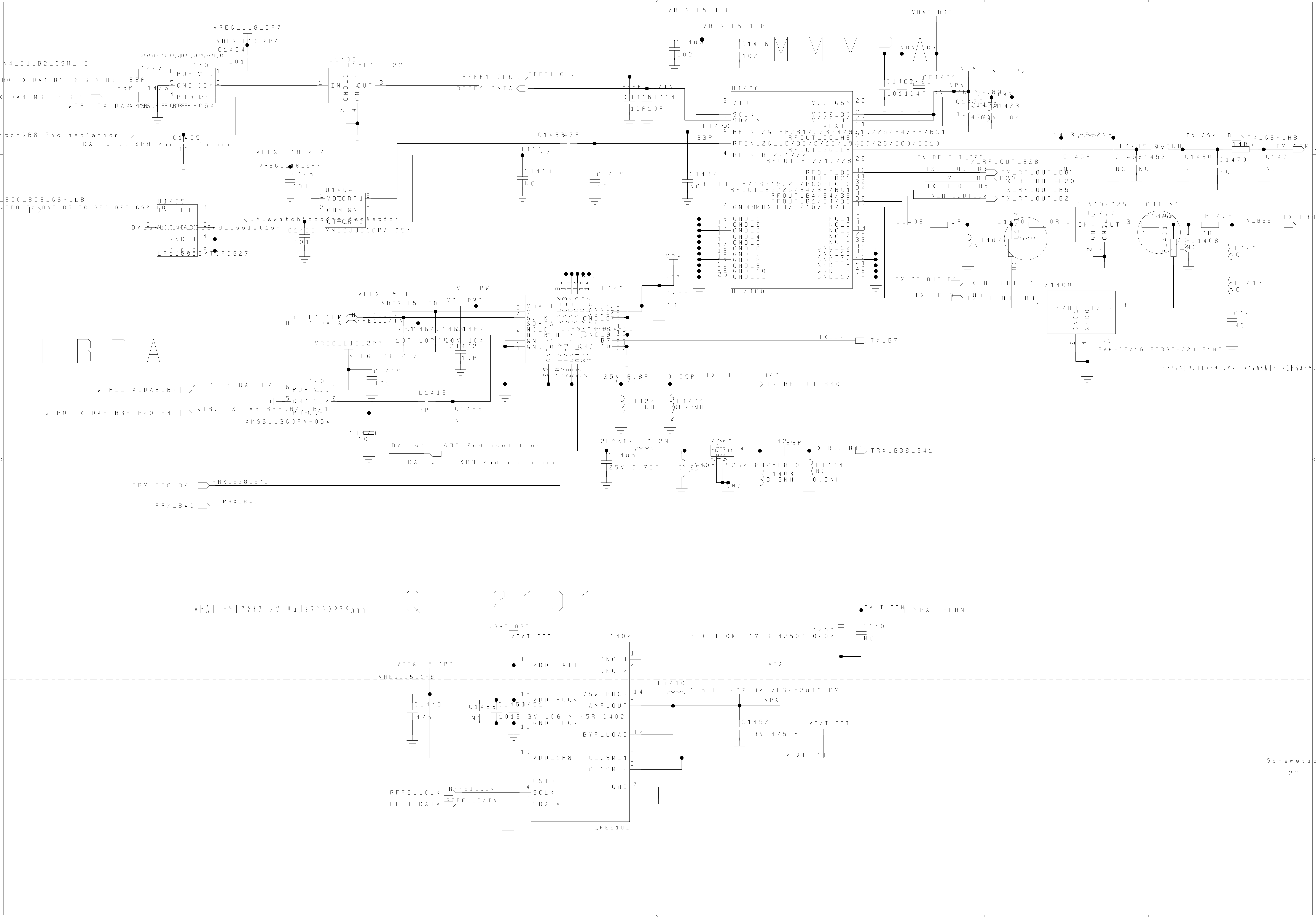

MMPA
HBPA
QFE2101
U1400
RF7460
VIO
SCLK
SDATA
RFIN_2G_HB/B1/2/3/4/9/10/25/34/39/BC1
RFOUT_2G_HB
RFIN_2G_LB/B5/8/18/19/20/26/BC0/BC10
RFOUT_2G_LB
RFIN_B12/17/28
RFOUT_B12/17/28
RFOUT_B8
RFOUT_B20
RFOUT_B5/18/19/26/BC0/BC10
RFOUT_B2/25/34/39/BC1
RFOUT_B4/34/39
RFOUT_B1/34/39
RFOUT_B3/9/10/34/39
VCC_GSM
VCC2_3G
VCC1_3G
VBATT
VREG_L5_1P8
VBAT_RST
VPA
VPH_PWR
RFFE1_CLK
RFFE1_DATA
C1400
C1416
102
C1414
10P
L1420
33P
C1437
C1439
C1413
NC
L1411
47P
TX_GSM_HB
TX_GSM_LB
TX_RF_OUT_B28
TX_RF_OUT_B8
TX_RF_OUT_B20
TX_RF_OUT_B5
TX_RF_OUT_B2
TX_RF_OUT_B1
TX_RF_OUT_B3
L1413
2.2NH
L1415
C1456
C1457
C1460
C1470
C1471
L1406
0R
L1407
L1400
U1407
DEA102025LT-6313A1
R1400
R1401
R1403
L1408
L1409
L1412
C1468
TX_B39
Z1400
IN/OUT
SAW-DEA161953BT-2240B1MT
U1403
PORT1
VDD
GND
COM
PORT2
CTRL
L1427
L1426
33P
C1454
101
VREG_L18_2P7
WTR0_TX_DA4_B1_B2_GSM_HB
WTR1_TX_DA4_MB_B3_B39
4X_MM5BS_0J33_G503P9A-054
U1408
FI 105L186822-T
IN_0
OUT
DA_switch&B8_2nd_isolation
C1455
U1405
LFE18829MT
WTR0_TX_DA2_B5_B8_B20_B28_GSM_LB
U1404
XM55JJ3G0PA-054
C1453
C1458
U1401
IC-SKY77384-31
VBATT
VCC1
VCC2
B7
TX_B7
C1469
104
C1461
C1464
C1465
C1467
C1402
U1409
WTR1_TX_DA3_B7
WTR0_TX_DA3_B38_B40_B41
L1419
C1436
C1478
C1403
25V 6.8P
0.25P
TX_RF_OUT_B40
L1424
3.6NH
L1401
L1402
0.2NH
C1405
25V 0.75P
Z1403
L1425
33P
TRX_B38_B41
L1403
3.3NH
L1404
PRX_B38_B41
PRX_B40
VBAT_RST
U1402
VDD_BATT
VDD_BUCK
GND_BUCK
VDD_1P8
USID
SCLK
SDATA
DNC_1
DNC_2
VSW_BUCK
AMP_OUT
BYP_LOAD
C_GSM_1
C_GSM_2
GND
L1410
1.5UH 20% 3A VLS252010HBX
C1452
6.3V 475 M
C1449
475
C1463
C1450
C1451
6.3V 106 M X5R 0402
RT1400
NTC 100K 1% B 4250K 0402
C1406
PA_THERM
Schematic
22

HB_DUP_PRX

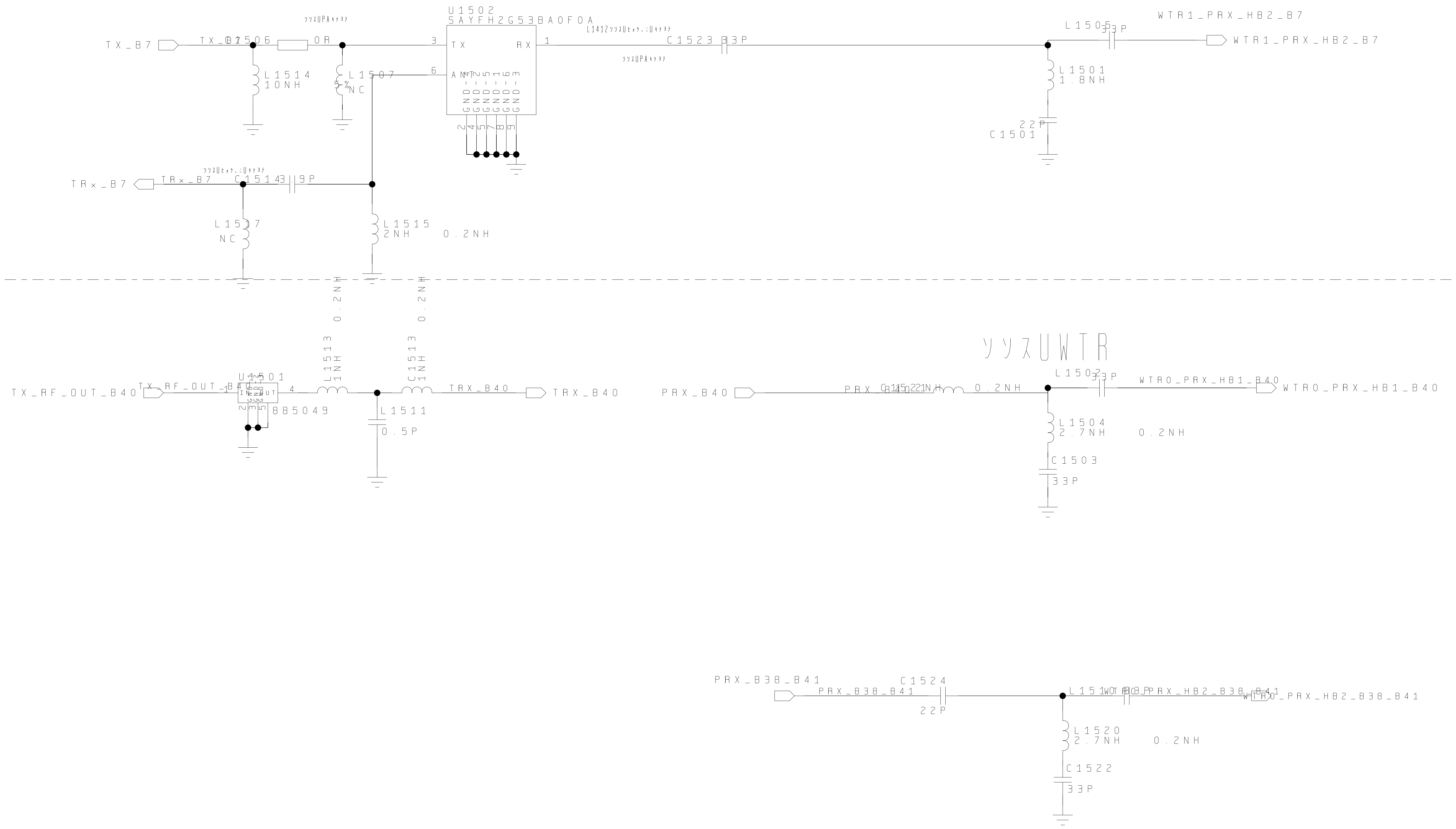

U1502
SAYFH2G53BA0F0A
ソソスUPAｷﾅﾖﾃ
L1412ソソスUﾋｮｹ、ﾆUｷﾅﾖﾃ
TX_B7
TX_B7
C1506
0R
L1514
10NH
L1507
5%
NC
TX
RX
ANT
GND-1
GND-2
GND-3
GND-4
GND-5
GND-6
C1523
33P
L1505
33P
WTR1_PRX_HB2_B7
WTR1_PRX_HB2_B7
L1501
1.8NH
22P
C1501
ソソスUﾋｮｹ、ﾆUｷﾅﾖﾃ
TRx_B7
TRx_B7
C1514
3.9P
L1517
NC
L1515
2NH
0.2NH
L1513
1NH
0.2NH
C1513
1NH
0.2NH
U1501
TX_RF_OUT_B40
TX_RF_OUT_B40
IN
OUT
GND
885049
L1511
0.5P
TRX_B40
TRX_B40
ソソスUWTR
PRX_B40
PRX_B40
C1512
2.2NH
0.2NH
L1502
33P
WTR0_PRX_HB1_B40
WTR0_PRX_HB1_B40
L1504
2.7NH
0.2NH
C1503
33P
PRX_B38_B41
PRX_B38_B41
C1524
22P
L1510
33P
WTR0_PRX_HB2_B38_B41
WTR0_PRX_HB2_B38_B41
L1520
2.7NH
0.2NH
C1522
33P

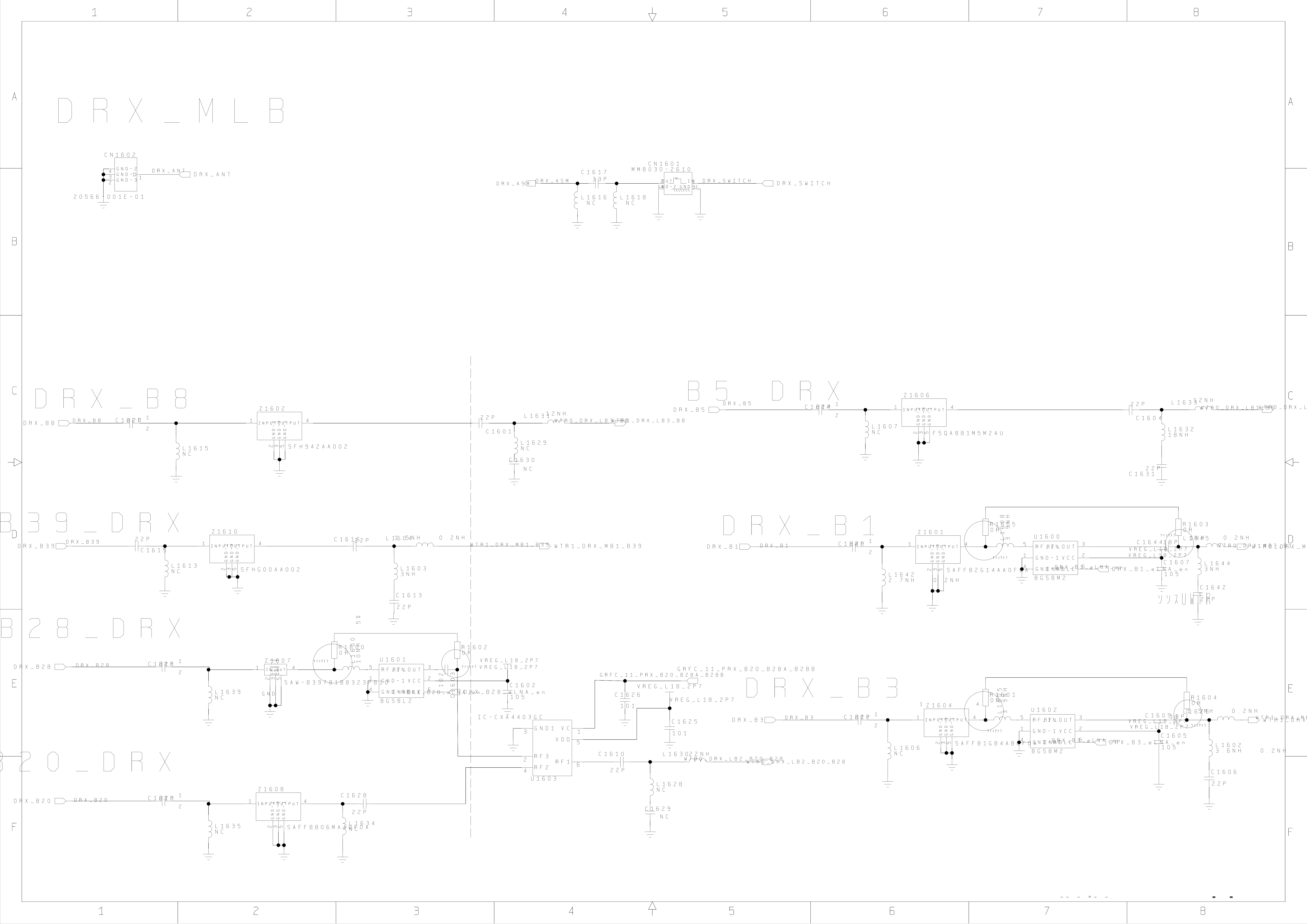
DRX_MLB
CN1602
GND-2
GND-1
GND-3
20566-001E-01
DRX_ANT
DRX_ASM
C1617
33P
L1616
NC
L1618
NC
CN1601
MM8030-2610
DRX_SWITCH
DRX_B8
C1820
Z1602
INPUT OUTPUT
SFH942AA002
L1615
NC
22P
C1601
L1631
12NH
L1629
NC
C1630
NC
WTR0_DRX_LB3_B8
B5 DRX
DRX_B5
C1822
Z1606
F5QA881M5M2AU
L1607
NC
C1604
L1633
12NH
L1632
18NH
22P
C1631
WTR0_DRX_LB1_B5
B39_DRX
DRX_B39
22P
C1615
Z1610
SFHG00AA002
L1613
NC
C1616
22P
L1605
4NH
0.2NH
L1603
3NH
C1613
22P
WTR1_DRX_MB1_B39
DRX_B1
DRX_B1
C1820
Z1601
SAFFB2G14AA0F0A
L1642
2.7NH
0.2NH
R1605
0R
L1608
3.9NH
U1600
RF IN
RF OUT
GND-1
VCC
GND
ENABLE
BGS8M2
R1603
0R
C1644
18P
L1645
0.2NH
VREG_L18_2P7
C1607
105
L1644
3NH
C1642
22P
DRX_B1_eLNA_en
WTR0_DRX_MB3_B1
B28_DRX
DRX_B28
C1828
Z1607
SAW-B3978189323P810
GND
L1639
NC
5%
R1600
0R
L1600
10NH
U1601
BGS8L2
R1602
0R
C1603
102
VREG_L18_2P7
C1602
105
DRX_B28_eLNA_en
GRFC_11_PRX_B20_B28A_B28B
VREG_L18_2P7
C1626
101
C1625
101
IC-CXA4403GC
GND1
VC
VDD
RF3
RF2
RF1
U1603
C1610
22P
L1630
22NH
WTR0_DRX_LB2_B20_B28
L1628
NC
C1629
NC
B20_DRX
DRX_B20
C1828
Z1608
SAFFB806MAA0F0A
L1635
NC
C1628
22P
L1634
NC
DRX_B3
DRX_B3
C1822
Z1604
SAFFB1G84AB0F0A
L1606
NC
R1601
0R
L1615
3.9NH
U1602
BGS8M2
R1604
0R
C1609
18P
L1652
NH
0.2NH
VREG_L18_2P7
C1605
105
DRX_B3_eLNA_en
L1602
3.6NH
0.2NH
C1606
22P
WTR1_DRX_MB2_B3
1
2
3
4
5
6
7
8
A
B
C
D
E
F

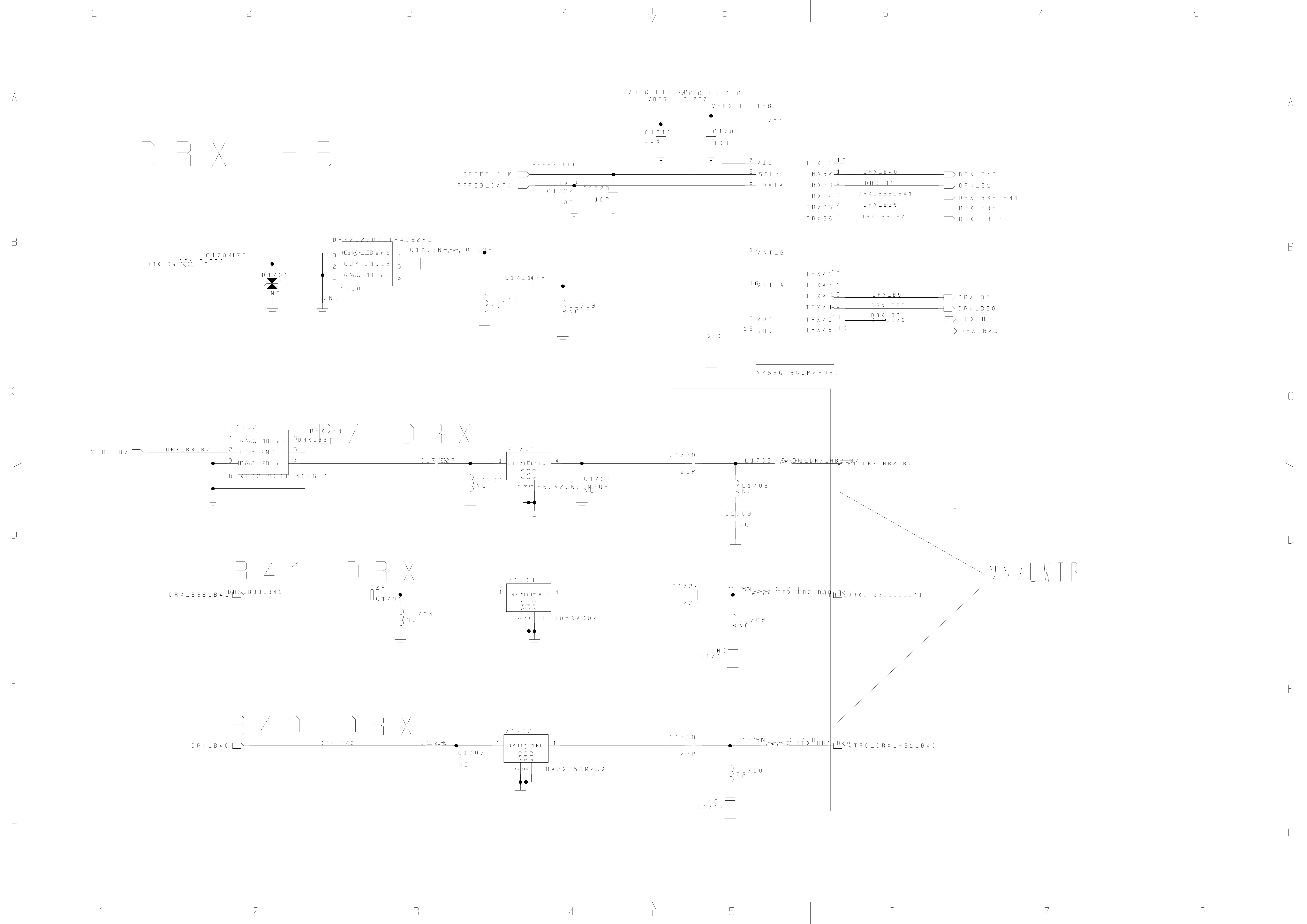
DRX_HB
VREG_L18_2P7
VREG_L5_1P8
VREG_L18_2P7
VREG_L5_1P8
U1701
C1710
103
C1705
103
RFFE3_CLK
RFFE3_CLK
RFFE3_DATA
RFFE3_DATA
C1722
10P
C1723
10P
7 VIO
9 SCLK
8 SDATA
17 ANT_B
16 ANT_A
6 VDD
19 GND
GND
TRXB1 18
TRXB2 1
TRXB3 2
TRXB4 3
TRXB5 4
TRXB6 5
TRXA1 15
TRXA2 14
TRXA3 13
TRXA4 12
TRXA5 11
TRXA6 10
DRX_B40
DRX_B1
DRX_B38_B41
DRX_B39
DRX_B3_B7
DRX_B5
DRX_B28
DRX_B8
DRX_B20
XMSSGT3GOPA-061
DRX_SWITCH
DRX_SWITCH
C1704 47P
D1701
NC
DPX202700DT-4062A1
3 High_Band
2 COM GND_3
1 Low_Band
4
5
6
U1700
GND
C1715 NH
0.2NH
C1711 47P
L1718
NC
L1719
NC
B7 DRX
U1702
1 Low_Band
2 COM GND_3
3 High_Band
6
5
4
DPX202690DT-4066B1
DRX_B3
DRX_B3
DRX_B3_B7
DRX_B3_B7
C1702 32P
L1701
NC
Z1701
1 INPUT OUTPUT 4
GND GND GND
2 3 5
F6QA2G655M2QH
C1708
NC
C1720
22P
L1703 2NH
WTR1_DRX_HB2_B7
WTR1_DRX_HB2_B7
L1708
NC
C1709
NC
B41 DRX
DRX_B38_B41
DRX_B38_B41
22P
C1701
L1704
NC
Z1703
1 INPUT OUTPUT 4
GND GND GND
2 3 5
SFHG05AA002
C1724
22P
L 117.152NH
0.2NH
WTR0_DRX_HB2_B38_B41
WTR0_DRX_HB2_B38_B41
L1709
NC
NC
C1716
ソソスUWTR
B40 DRX
DRX_B40
DRX_B40
C 1272 0P6
C1707
NC
Z1702
1 INPUT OUTPUT 4
GND GND GND
2 3 5
F6QA2G350M2QA
C1718
22P
L 117.153NH
0.2NH
WTR0_DRX_HB1_B40
WTR0_DRX_HB1_B40
L1710
NC
NC
C1717
1 2 3 4 5 6 7 8
A B C D E F

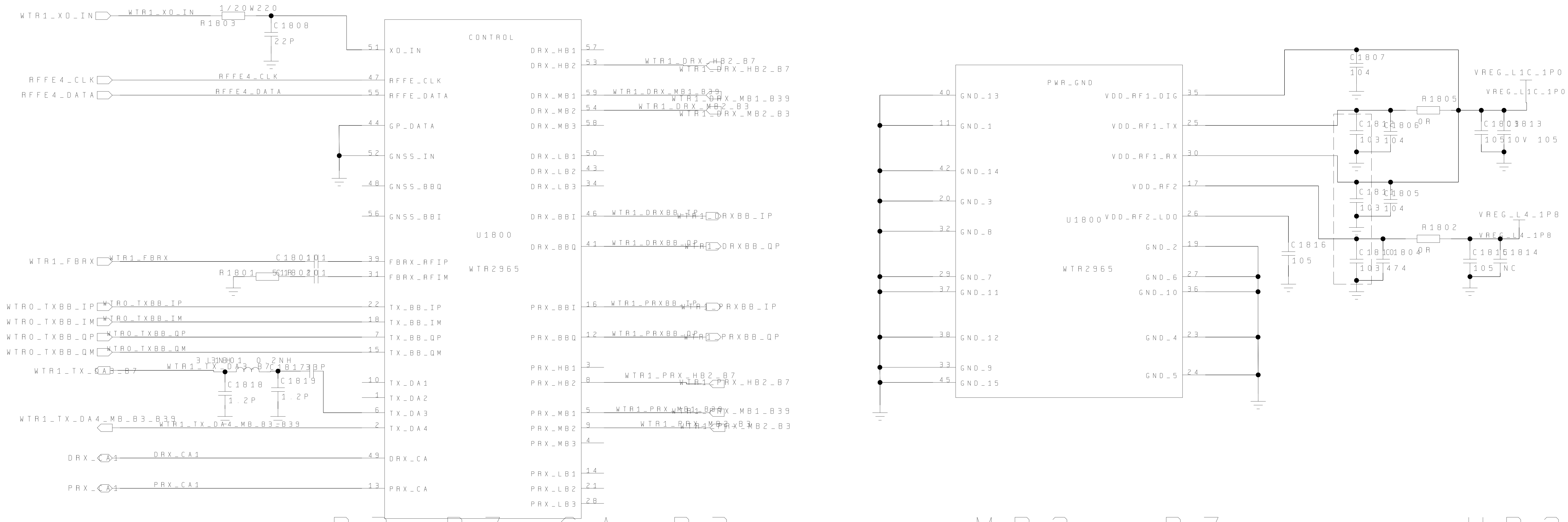
WTR1_XO_IN
1/20W220
R1803
C1808
22P
RFFE4_CLK
RFFE4_DATA
WTR1_FBRX
C1801
R1801
WTR0_TXBB_IP
WTR0_TXBB_IM
WTR0_TXBB_QP
WTR0_TXBB_QM
WTR1_TX_DA3_B7
L1801 0.2NH
C1817
C1818 1.2P
C1819 1.2P
WTR1_TX_DA4_MB_B3_B39
DRX_CA1
PRX_CA1
CONTROL
XO_IN
RFFE_CLK
RFFE_DATA
GP_DATA
GNSS_IN
GNSS_BBQ
GNSS_BBI
FBRX_RFIP
FBRX_RFIM
TX_BB_IP
TX_BB_IM
TX_BB_QP
TX_BB_QM
TX_DA1
TX_DA2
TX_DA3
TX_DA4
DRX_CA
PRX_CA
U1800
WTR2965
DRX_HB1
DRX_HB2
DRX_MB1
DRX_MB2
DRX_MB3
DRX_LB1
DRX_LB2
DRX_LB3
DRX_BBI
DRX_BBQ
PRX_BBI
PRX_BBQ
PRX_HB1
PRX_HB2
PRX_MB1
PRX_MB2
PRX_MB3
PRX_LB1
PRX_LB2
PRX_LB3
WTR1_DRX_HB2_B7
WTR1_DRX_MB1_B39
WTR1_DRX_MB2_B3
WTR1_DRXBB_IP
WTR1_DRXBB_QP
WTR1_PRXBB_IP
WTR1_PRXBB_QP
WTR1_PRX_HB2_B7
WTR1_PRX_MB1_B39
WTR1_PRX_MB2_B3
PWR_GND
GND_13
GND_1
GND_14
GND_3
GND_8
GND_7
GND_11
GND_12
GND_9
GND_15
VDD_RF1_DIG
VDD_RF1_TX
VDD_RF1_RX
VDD_RF2
VDD_RF2_LDO
GND_2
GND_6
GND_10
GND_4
GND_5
C1807 104
R1805 0R
VREG_L1C_1P0
C1803 105
C1813 10V 105
C1812 103
C1806 104
C1811 103
C1805 104
C1816 105
R1802 0R
VREG_L4_1P8
C1810 103
C1804 474
C1815 105
C1814 NC
B3+B7 CA B3
MB2 B7
HB2

ements for PRX_CA interconnections and DRX_CA interconnections:

trace length between WTR0 and WTR1 pin < 15 mm

ation between PRX_CA and DRX_CA pins > 50 dB

e impedance 40 ohms with GND above and below these traces

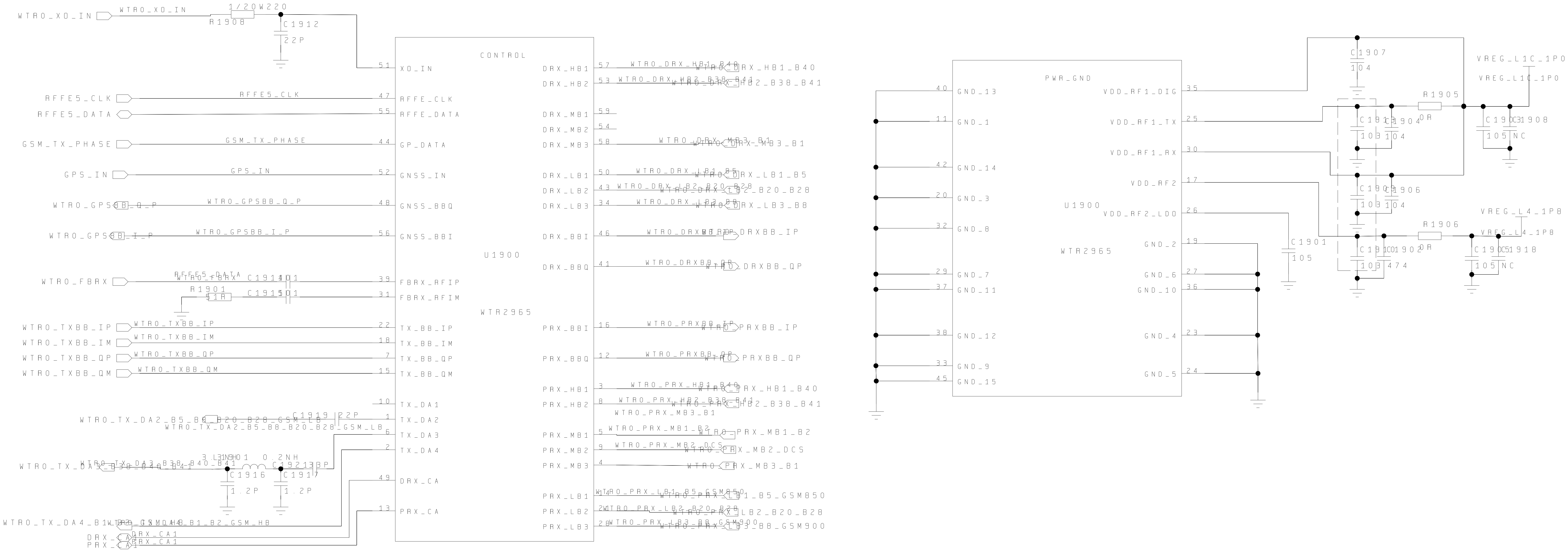
WTR0_XO_IN
R1908
1/20W220
C1912
22P
CONTROL
XO_IN
RFFE5_CLK
RFFE5_DATA
GSM_TX_PHASE
GPS_IN
WTR0_GPSBB_Q_P
WTR0_GPSBB_I_P
WTR0_FBRX
R1901
51R
C1914
C1915
WTR0_TXBB_IP
WTR0_TXBB_IM
WTR0_TXBB_QP
WTR0_TXBB_QM
WTR0_TX_DA2_B5_B8_B20_B28_GSM_LB
C1919
22P
WTR0_TX_DA3_B38_B40_B41
L1901
0.2NH
C1916
1.2P
C1917
1.2P
C1921
WTR0_TX_DA4_B1_B3_GSM_HB
DRX_CA1
PRX_CA1
RFFE_CLK
RFFE_DATA
GP_DATA
GNSS_IN
GNSS_BBQ
GNSS_BBI
FBRX_RFIP
FBRX_RFIM
TX_BB_IP
TX_BB_IM
TX_BB_QP
TX_BB_QM
TX_DA1
TX_DA2
TX_DA3
TX_DA4
DRX_CA
PRX_CA
U1900
WTR2965
DRX_HB1
DRX_HB2
DRX_MB1
DRX_MB2
DRX_MB3
DRX_LB1
DRX_LB2
DRX_LB3
DRX_BBI
DRX_BBQ
PRX_BBI
PRX_BBQ
PRX_HB1
PRX_HB2
PRX_MB1
PRX_MB2
PRX_MB3
PRX_LB1
PRX_LB2
PRX_LB3
WTR0_DRX_HB1_B40
WTR0_DRX_HB2_B38_B41
WTR0_DRX_MB3_B1
WTR0_DRX_LB1_B5
WTR0_DRX_LB2_B20_B28
WTR0_DRX_LB3_B8
WTR0_DRXBB_IP
WTR0_DRXBB_QP
WTR0_PRXBB_IP
WTR0_PRXBB_QP
WTR0_PRX_HB1_B40
WTR0_PRX_HB2_B38_B41
WTR0_PRX_MB3_B1
WTR0_PRX_MB1_B2
WTR0_PRX_MB2_DCS
WTR0_PRX_LB1_B5_GSM850
WTR0_PRX_LB2_B20_B28
WTR0_PRX_LB3_B8_GSM900
PWR_GND
GND_13
GND_1
GND_14
GND_3
GND_8
GND_7
GND_11
GND_12
GND_9
GND_15
VDD_RF1_DIG
VDD_RF1_TX
VDD_RF1_RX
VDD_RF2
VDD_RF2_LDO
GND_2
GND_6
GND_10
GND_4
GND_5
U1900
WTR2965
C1907
104
C1911
103
C1904
104
C1903
103
C1906
104
C1910
103
C1902
474
C1901
105
R1905
0R
R1906
0R
C1909
105
C1908
NC
C1905
105
C1918
NC
VREG_L1C_1P0
VREG_L4_1P8

ents for PRX_CA interconnections and DRX_CA interconnections:

trace length between WTR0 and WTR1 pin < 15 mm

tion between PRX_CA and DRX_CA pins > 50 dB

impedance 40 ohms with GND above and below these traces

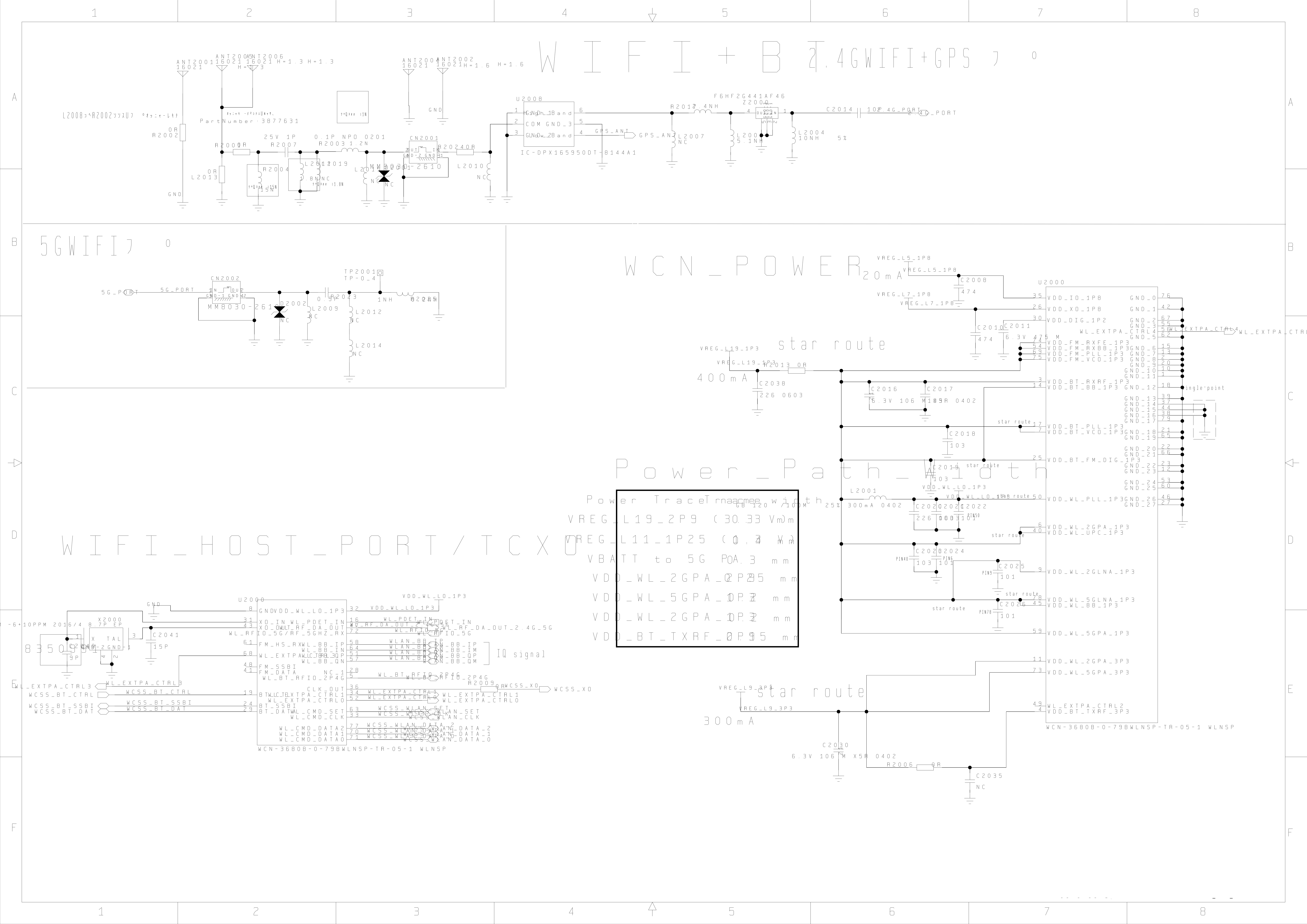
WIFI+BT
2.4GWIFI+GPS
ANT2001 16021
ANT2005 16021 H=1.3
ANT2006 16021 H=1.3
ANT2004 16021
ANT2002 16021 H=1.6 H=1.6
L2008, R2002
PartNumber:3877631
0R R2002
0R L2013
R2001 0R
25V 1P R2007
0.1P NP0 0201
R2003 1.2N
CN2001
R2024 0R
L2010 NC
MM8030-2610
U2008
IC-DPX165950DT-8144A1
COM GND_3
GPS_ANT
R2017 4NH
F6HF2G441AF46
Z2000
L2007 NC
L2005 5.1NH
L2004 10NH 5%
C2014 10P
2.4G_PORT
GND
5GWIFI
5G_PORT
CN2002
MM8030-2610
D2002 NC
L2009 NC
TP2001 TP-0.4
R2023 1NH
L2012 NC
L2014 NC
WCN_POWER
20mA
VREG_L5_1P8
VREG_L7_1P8
C2008 474
C2010 474
C2011 6.3V 475 M
star route
VREG_L19_2P9
R2013 0R
400mA
C2038 226 0603
C2016 6.3V 106 M X5R 0402
C2017 105
C2018 103
C2019 103
L2001 120 100M 25% 300mA 0402
C2020 226
C2021
C2022 101
C2023 103
C2024 101
C2025 101
C2026 101
VREG_L9_3P3
300mA
C2030 6.3V 106 M X5R 0402
R2006 0R
C2035 NC
U2000
VDD_IO_1P8
VDD_XO_1P8
VDD_DIG_1P2
VDD_FM_RXFE_1P3
VDD_FM_RXBB_1P3
VDD_FM_PLL_1P3
VDD_FM_VCO_1P3
VDD_BT_RXRF_1P3
VDD_BT_BB_1P3
VDD_BT_PLL_1P3
VDD_BT_VCO_1P3
VDD_BT_FM_DIG_1P3
VDD_WL_PLL_1P3
VDD_WL_2GPA_1P3
VDD_WL_UPC_1P3
VDD_WL_2GLNA_1P3
VDD_WL_5GLNA_1P3
VDD_WL_BB_1P3
VDD_WL_5GPA_1P3
VDD_WL_2GPA_3P3
VDD_WL_5GPA_3P3
WL_EXTPA_CTRL2
VDD_BT_TXRF_3P3
WL_EXTPA_CTRL4
single point
GND_0 … GND_27
WCN-3680B-0-79BWLNSP-TR-05-1 WLNSP
Power_Path_Width
Power Trace name width
VREG_L19_2P9 0.33 mm
VREG_L11_1P25 0.4 mm
VBATT to 5G PA 0.3 mm
VDD_WL_2GPA_2P85 mm
VDD_WL_5GPA_1P3 mm
VDD_WL_2GPA_1P3 mm
VDD_BT_TXRF_2P95 mm
WIFI_HOST_PORT/TCXO
X2000 TAL
C2040 9P
C2041 15P
±6 10PPM 2016/4
U2000
VDD_WL_LO_1P3
XO_IN
XO_OUT
WL_PDET_IN
WL_RF_DA_OUT_2.4G_5G
WL_RFIO_5G
FM_HS_RX
WL_BB_IP
WL_BB_IN
WL_BB_QP
WL_BB_QN
WL_EXTPA_CTRL3
FM_SSBI
FM_DATA
WL_BT_RFIO_2P4G
CLK_OUT
R2009 0R
WCSS_XO
WL_EXTPA_CTRL1
WL_EXTPA_CTRL0
WCSS_BT_CTRL
WCSS_BT_SSBI
WCSS_BT_DAT
WL_CMD_SET
WL_CMD_CLK
WL_CMD_DATA2
WL_CMD_DATA1
WL_CMD_DATA0
WCSS_WLAN_SET
WCSS_WLAN_CLK
WCSS_WLAN_DATA_2
WCSS_WLAN_DATA_1
WCSS_WLAN_DATA_0
WLAN_BB_IP
WLAN_BB_IN
WLAN_BB_QP
WLAN_BB_QM
IQ signal
WCN-3680B-0-79BWLNSP-TR-05-1 WLNSP
1 2 3 4 5 6 7 8
A B C D E F

WIFI+BT_2

For 2nd Gen FEM 5G

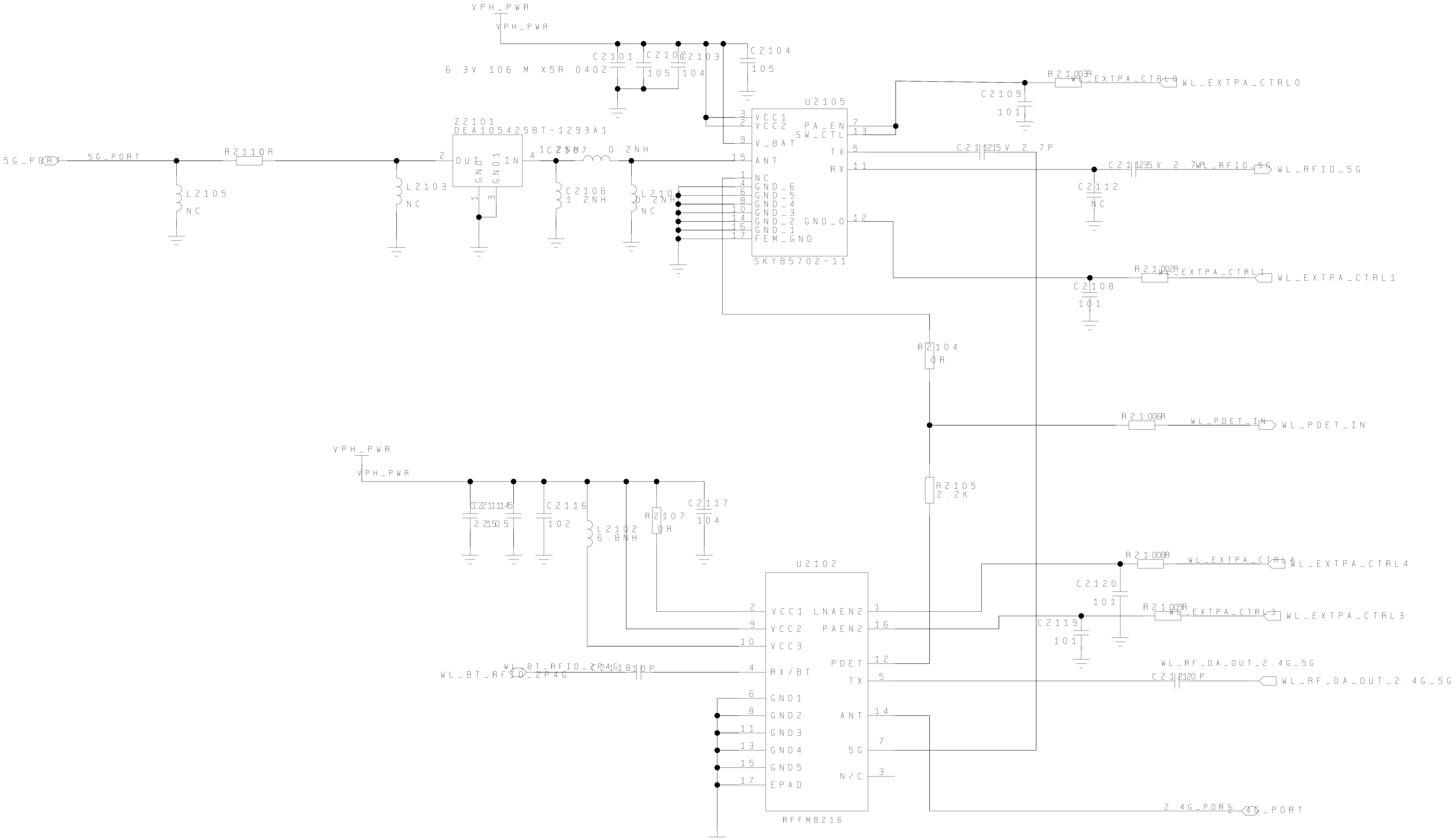
VPH_PWR
VPH_PWR
C2101
C2102
C2103
C2104
6.3V 106 M X5R 0402
105
104
105
U2105
3 VCC1
2 VCC2
9 V_BAT
15 ANT
1 NC
4 GND_6
6 GND_5
8 GND_4
10 GND_3
14 GND_2
16 GND_1
17 FEM_GND
PA_EN 7
SW_CTL 13
TX 5
RX 11
GND_0 12
SKY85702-11
R2100 3R
WL_EXTPA_CTRL0
WL_EXTPA_CTRL0
C2109
101
C2111 5V 2.7P
C2112 5V 2.7P
WL_RFIO_5G
WL_RFIO_5G
C2112
NC
R2100 2R
WL_EXTPA_CTRL1
WL_EXTPA_CTRL1
C2108
101
Z2101
DEA105425BT-1293A1
2 OUT
GND
GND1
IN 4
1
3
5G_PORT
5G_PORT
R2110R
L2105
NC
L2103
NC
1.2NH
C2107
0.2NH
C2106
1.2NH
L2104
0.2NH
NC
R2104
0R
R2100 6R
WL_PDET_IN
WL_PDET_IN
R2105
2.2K
VPH_PWR
VPH_PWR
C2114
C2115
22
105
C2116
102
L2102
6.8NH
R2107
0R
C2117
104
U2102
2 VCC1
9 VCC2
10 VCC3
4 RX/BT
6 GND1
8 GND2
11 GND3
13 GND4
15 GND5
17 EPAD
LNAEN2 1
PAEN2 16
PDET 12
TX 5
ANT 14
5G 7
N/C 3
RFFM8216
R2100 8R
WL_EXTPA_CTRL4
WL_EXTPA_CTRL4
C2120
101
R2100 9R
WL_EXTPA_CTRL3
WL_EXTPA_CTRL3
C2119
101
WL_RF_DA_OUT_2.4G_5G
C2121 20P
WL_RF_DA_OUT_2.4G_5G
WL_BT_RFIO_2P4G
C2118 10P
WL_BT_RFIO_2P4G
2.4G_PORT
2.4G_PORT

For 3rd Gen FEM 2.4G

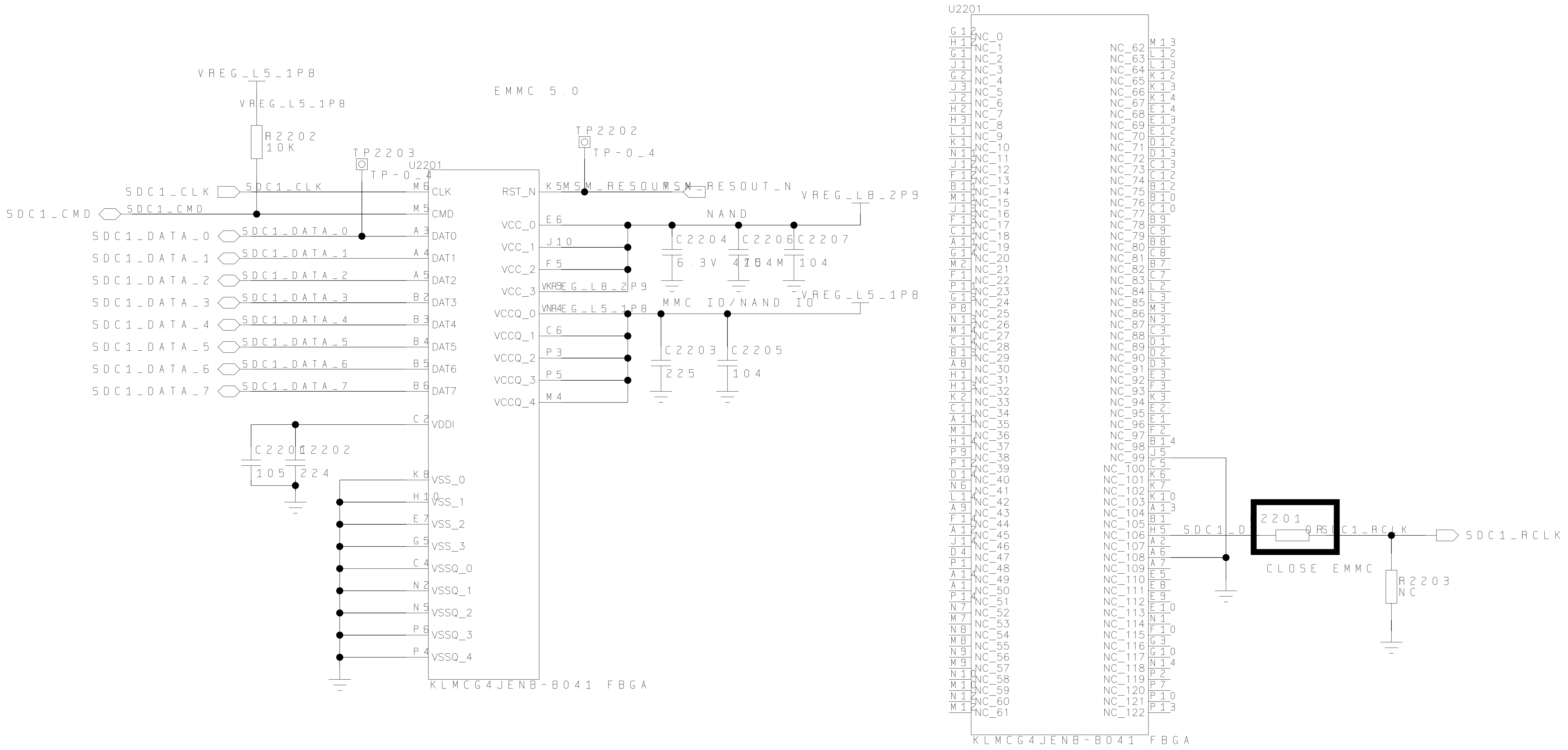
EMMC 5.0
VREG_L5_1P8
VREG_L5_1P8
R2202
10K
TP2203
TP-0_4
TP2202
TP-0_4
U2201
SDC1_CLK
SDC1_CMD
SDC1_DATA_0
SDC1_DATA_1
SDC1_DATA_2
SDC1_DATA_3
SDC1_DATA_4
SDC1_DATA_5
SDC1_DATA_6
SDC1_DATA_7
M6 CLK
M5 CMD
A3 DAT0
A4 DAT1
A5 DAT2
B2 DAT3
B3 DAT4
B4 DAT5
B5 DAT6
B6 DAT7
C2 VDDI
C2201
105
C2202
224
K8 VSS_0
H10 VSS_1
E7 VSS_2
G5 VSS_3
C4 VSSQ_0
N2 VSSQ_1
N5 VSSQ_2
P6 VSSQ_3
P4 VSSQ_4
RST_N K5
MSM_RESOUT_N
MSM_RESOUT_N
VCC_0 E6
VCC_1 J10
VCC_2 F5
VCC_3 K9
VREG_L8_2P9
NAND
VREG_L8_2P9
C2204
6.3V 475M
C2206
104
C2207
104
VCCQ_0 N4
VCCQ_1 C6
VCCQ_2 P3
VCCQ_3 P5
VCCQ_4 M4
VREG_L5_1P8
MMC IO/NAND IO
VREG_L5_1P8
C2203
225
C2205
104
KLMCG4JENB-B041 FBGA
U2201
G12 NC_0
H12 NC_1
G1 NC_2
J1 NC_3
G2 NC_4
J3 NC_5
J2 NC_6
H2 NC_7
H3 NC_8
L1 NC_9
K1 NC_10
N11 NC_11
J12 NC_12
F12 NC_13
B11 NC_14
M11 NC_15
J13 NC_16
F13 NC_17
C11 NC_18
A11 NC_19
G14 NC_20
M2 NC_21
F1 NC_22
P11 NC_23
G13 NC_24
P8 NC_25
N13 NC_26
M14 NC_27
C14 NC_28
B13 NC_29
A8 NC_30
H1 NC_31
H13 NC_32
K2 NC_33
C1 NC_34
A10 NC_35
M1 NC_36
H14 NC_37
P9 NC_38
P12 NC_39
D14 NC_40
N6 NC_41
L14 NC_42
A9 NC_43
F14 NC_44
A12 NC_45
J14 NC_46
D4 NC_47
P1 NC_48
A14 NC_49
A1 NC_50
P14 NC_51
N7 NC_52
M7 NC_53
N8 NC_54
M8 NC_55
N9 NC_56
M9 NC_57
N10 NC_58
M10 NC_59
N12 NC_60
M12 NC_61
NC_62 M13
NC_63 L12
NC_64 L13
NC_65 K12
NC_66 K13
NC_67 K14
NC_68 E14
NC_69 E13
NC_70 E12
NC_71 D12
NC_72 D13
NC_73 C13
NC_74 C12
NC_75 B12
NC_76 B10
NC_77 C10
NC_78 B9
NC_79 C9
NC_80 B8
NC_81 C8
NC_82 B7
NC_83 C7
NC_84 L2
NC_85 L3
NC_86 M3
NC_87 N3
NC_88 C3
NC_89 D1
NC_90 D2
NC_91 D3
NC_92 E3
NC_93 F3
NC_94 K3
NC_95 E2
NC_96 E1
NC_97 F2
NC_98 B14
NC_99 J5
NC_100 C5
NC_101 K6
NC_102 K7
NC_103 K10
NC_104 A13
NC_105 B1
NC_106 H5
NC_107 A2
NC_108 A6
NC_109 A7
NC_110 E5
NC_111 E8
NC_112 E9
NC_113 E10
NC_114 N1
NC_115 F10
NC_116 G3
NC_117 G10
NC_118 N14
NC_119 P2
NC_120 P7
NC_121 P10
NC_122 P13
KLMCG4JENB-B041 FBGA
SDC1_D
R2201
0R
SDC1_RCLK
SDC1_RCLK
CLOSE EMMC
R2203
NC

G-Sensor/Gyo

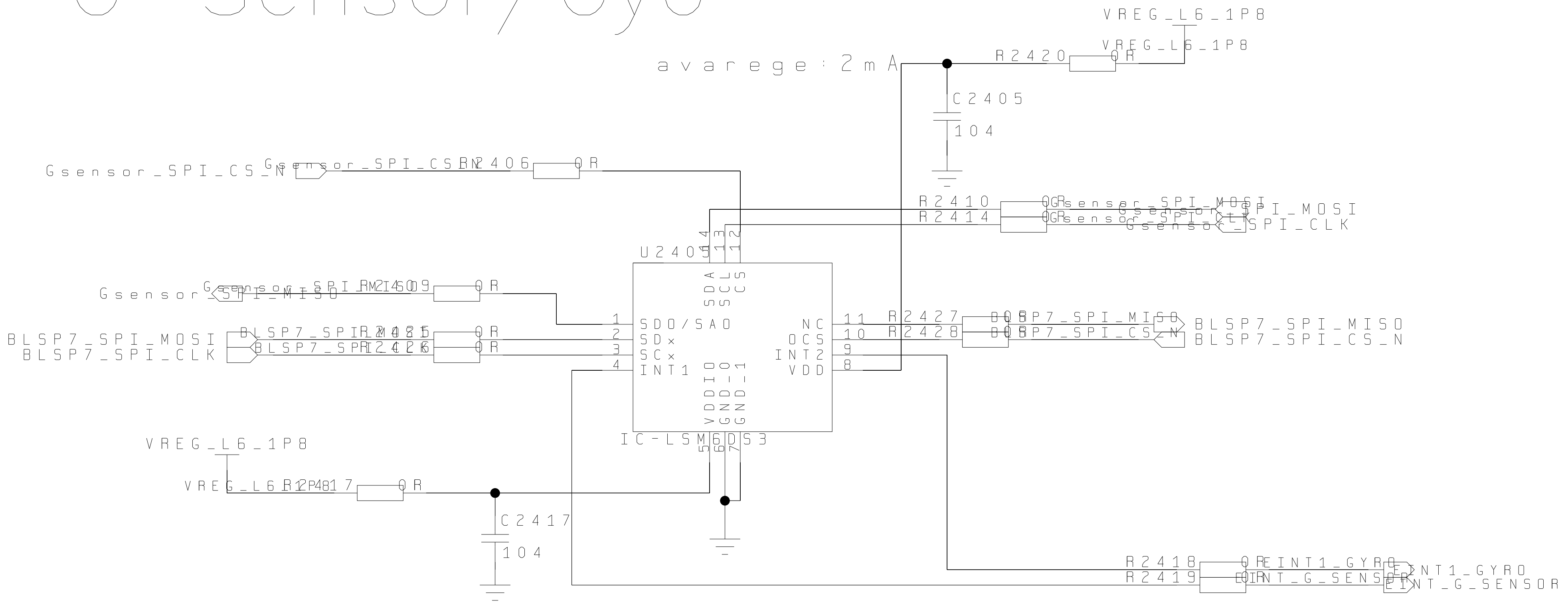
avarege:2mA
VREG_L6_1P8
R2420 0R
C2405 104
Gsensor_SPI_CS_N
R2406 0R
R2410 0R
R2414 0R
Gsensor_SPI_MOSI
Gsensor_SPI_CLK
U2405
SDA SCL CS
14 13 12
Gsensor_SPI_MISO
R2409 0R
BLSP7_SPI_MOSI
BLSP7_SPI_CLK
R2425 0R
R2426 0R
1 SDO/SA0
2 SDx
3 SCx
4 INT1
NC 11
OCS 10
INT2 9
VDD 8
VDDIO GND_0 GND_1
5 6 7
IC-LSM6DS3
R2427 0R
R2428 0R
BLSP7_SPI_MISO
BLSP7_SPI_CS_N
VREG_L6_1P8
R2417 0R
C2417 104
R2418 0R
R2419 0R
EINT1_GYRO
EINT_G_SENSOR

ﾖﾐｼ ｸﾅﾌﾍﾚｿ1

I2C ADDRESS(SA0=0):D4H( ) D5H

A.L.S.+P.S sensor module BTB

ｹ ﾐｵ ﾏｪUｯ ｺ9150027 APDS-9922

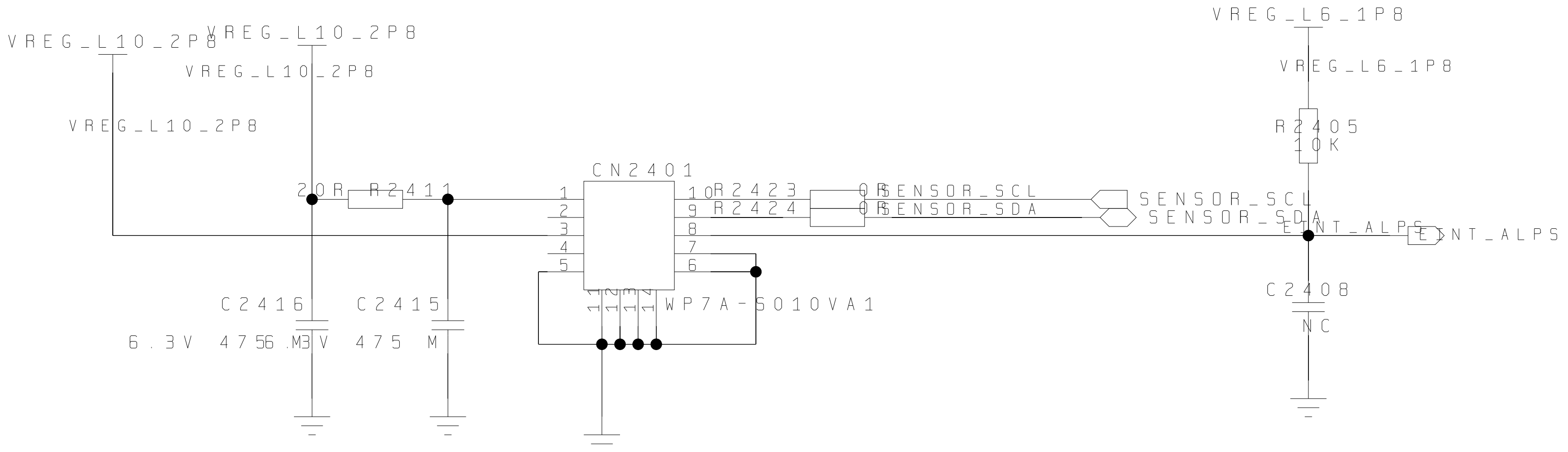
VREG_L10_2P8
VREG_L10_2P8
0R R2411
C2416 6.3V 475 M
C2415 6.3V 475 M
CN2401
1 2 3 4 5
10 9 8 7 6
WP7A-S010VA1
R2423 0R
R2424 0R
SENSOR_SCL
SENSOR_SDA
VREG_L6_1P8
R2405 10K
EINT_ALPS
C2408 NC

M Sensor

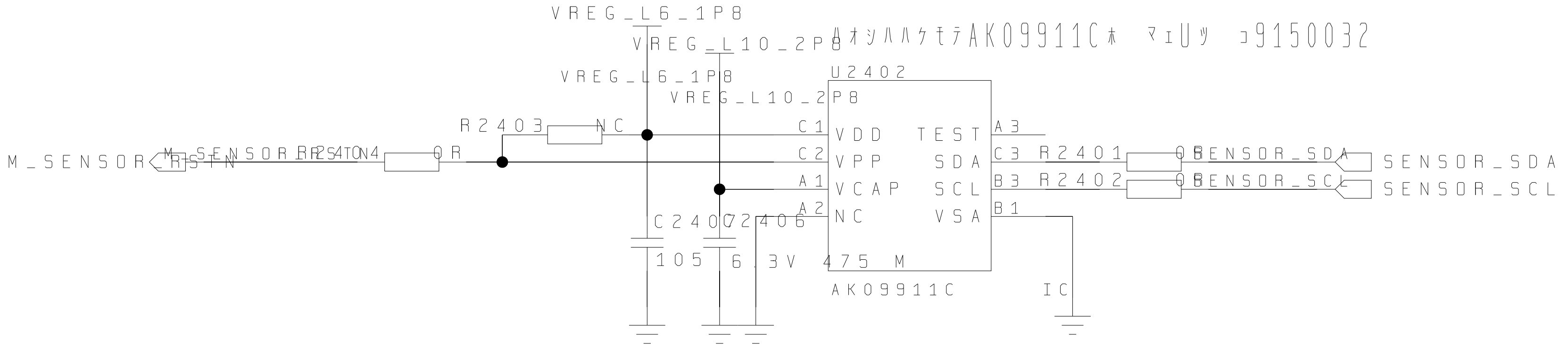
VREG_L6_1P8
VREG_L10_2P8
ﾑｵｼﾊﾊｹﾓﾃAK09911Cﾎ ﾏｪUｯ ｺ9150032
U2402
M_SENSOR_RSTN
R2404 0R
R2403 NC
C1 VDD
C2 VPP
A1 VCAP
A2 NC
TEST A3
SDA C3
SCL B3
VSA B1
C2407 105
C2406 6.3V 475 M
AK09911C
IC
R2401 0R
R2402 0R
SENSOR_SDA
SENSOR_SCL

Hall sensor

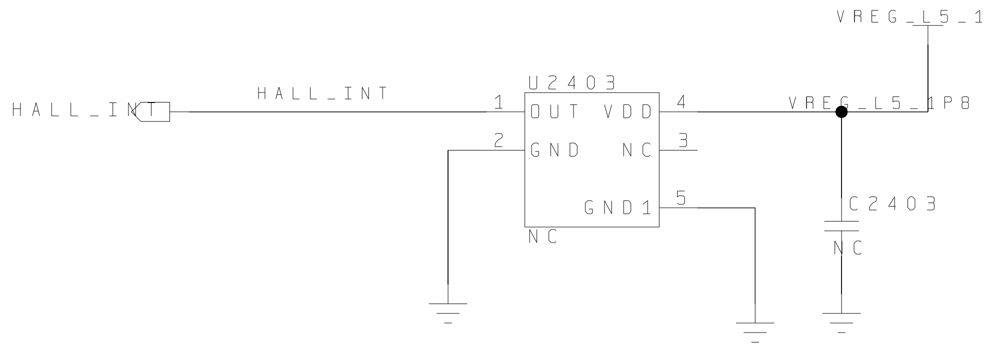
VREG_L5_1P8
HALL_INT
HALL_INT
U2403
1 OUT
2 GND
VDD 4
NC 3
GND1 5
NC
C2403 NC

RGB SENSOR

SIM1 Card

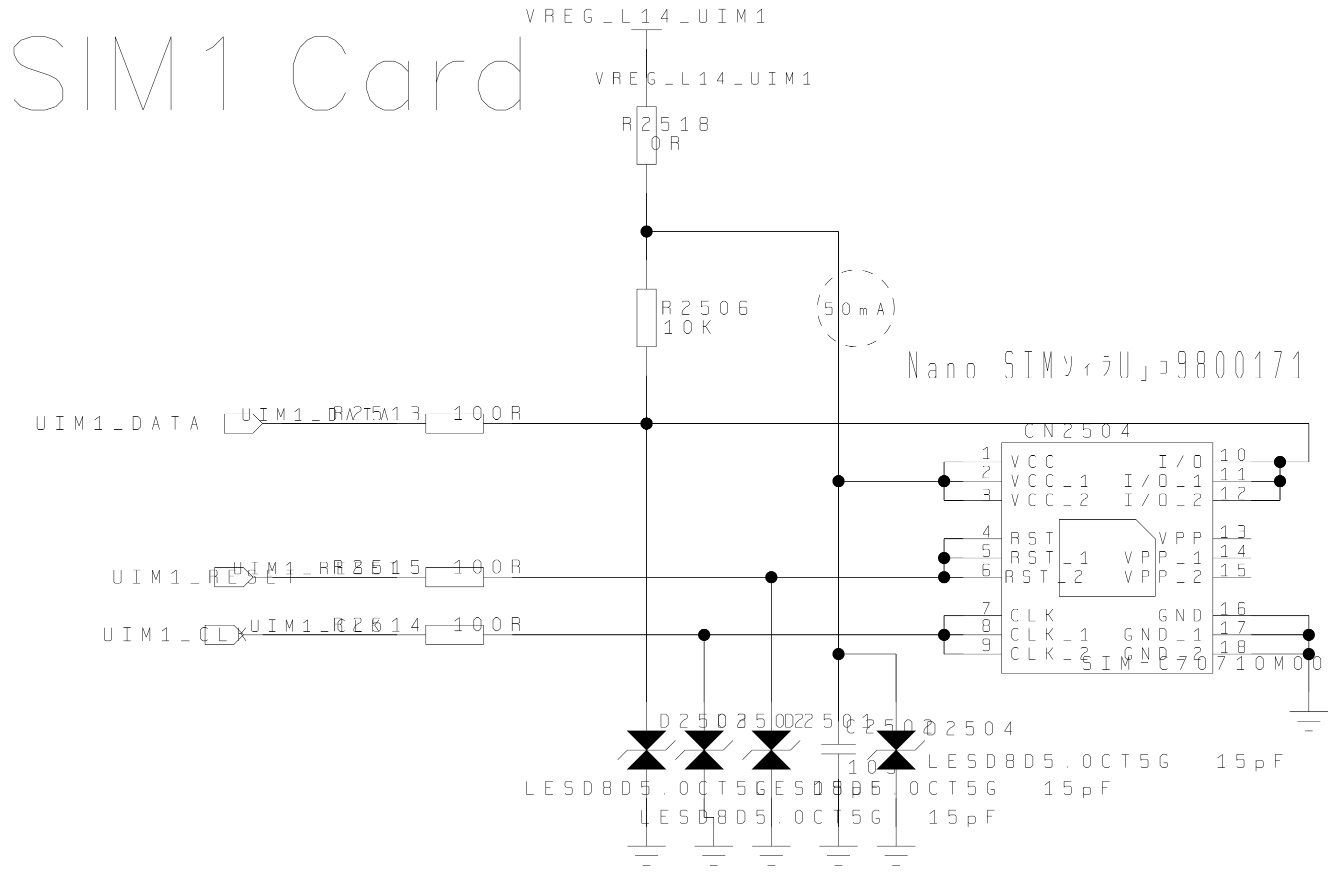
VREG_L14_UIM1
R2518
0R
R2506
10K
50mA
Nano SIMｿｹｯﾄ 9800171
UIM1_DATA
R2513
100R
UIM1_RESET
R2515
100R
UIM1_CLK
R2514
100R
CN2504
VCC
VCC_1
VCC_2
I/O
I/O_1
I/O_2
RST
RST_1
RST_2
VPP
VPP_1
VPP_2
CLK
CLK_1
CLK_2
GND
GND_1
GND_2
SIM-C70710M00
D2504
LESD8D5.0CT5G 15pF
C2509
105

CN2502 NC

Hot plug

Ext 2.95V Supply

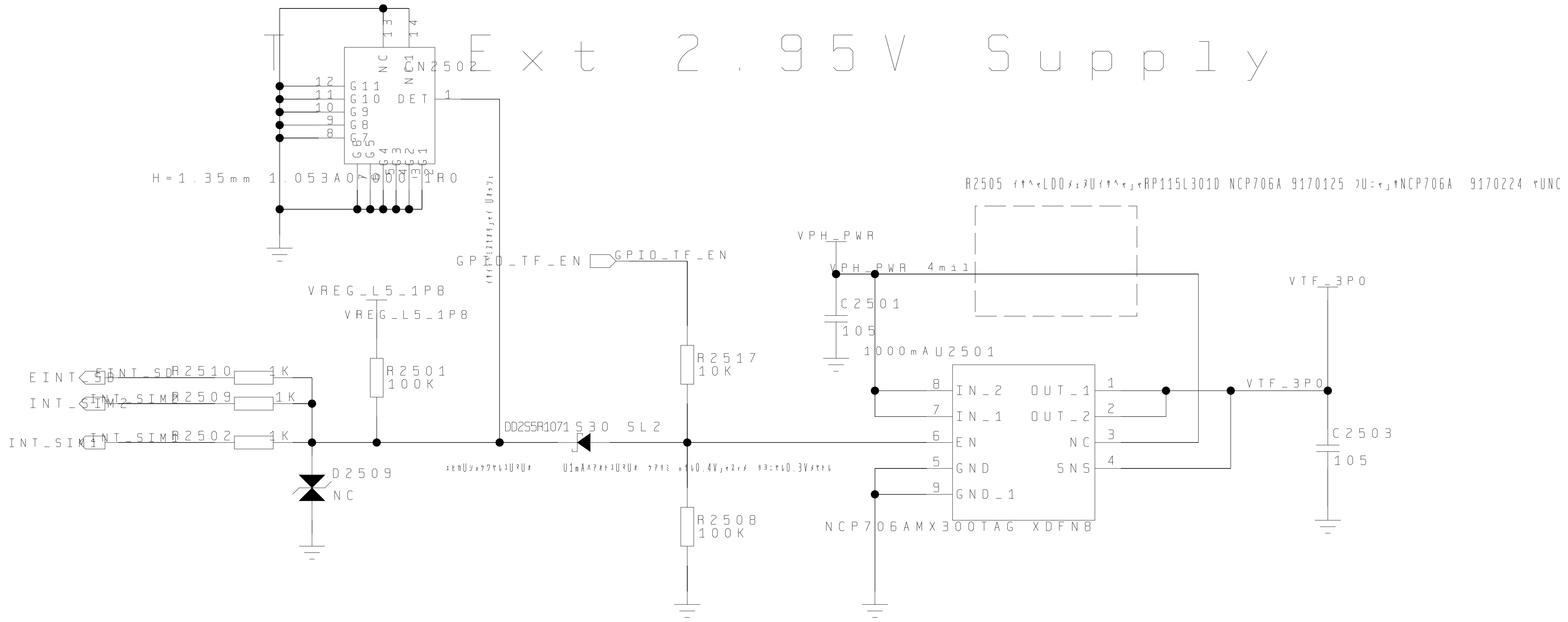
CN2502
G11
G10
G9
G8
G7
DET
H=1.35mm 1.053A07-000-1R0
EINT_SD
R2510
1K
INT_SIM2
R2509
1K
INT_SIM1
R2502
1K
D2509
NC
VREG_L5_1P8
R2501
100K
GPIO_TF_EN
R2517
10K
R2508
100K
D2505
SL2
VPH_PWR
C2501
105
1000mA
U2501
IN_2
IN_1
EN
GND
GND_1
OUT_1
OUT_2
NC
SNS
NCP706AMX300TAG XDFN8
VTF_3P0
C2503
105
R2505
RP115L3010 NCP706A 9170125
NCP706A 9170224

TF_CARD

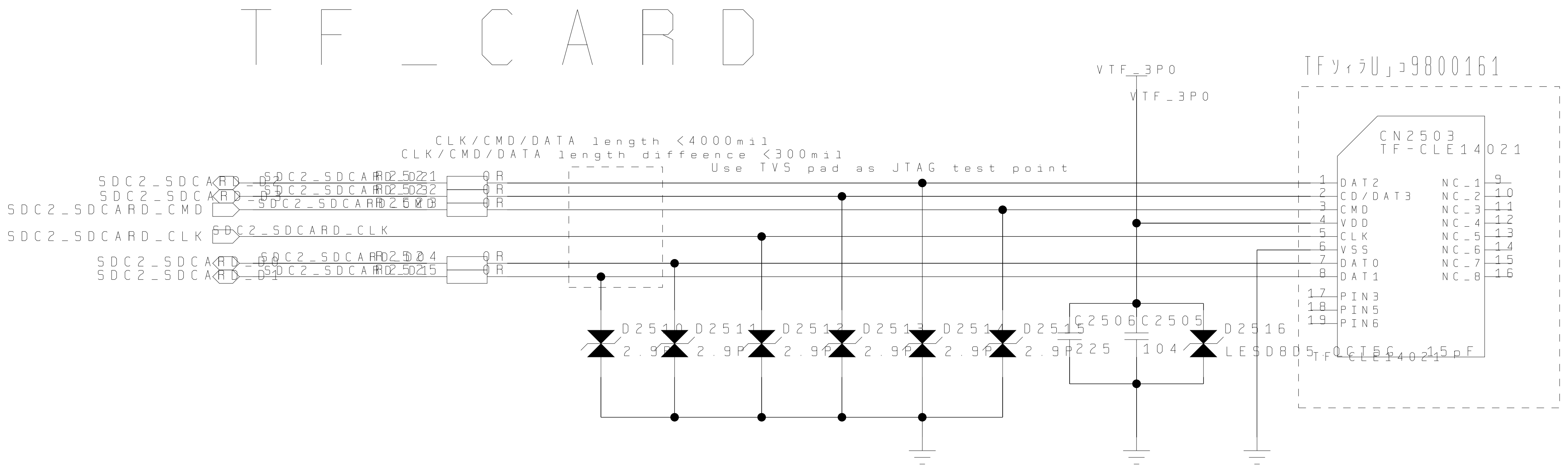
VTF_3P0
TFｿｹｯﾄ 9800161
CLK/CMD/DATA length <4000mil
CLK/CMD/DATA length diffeence <300mil
Use TVS pad as JTAG test point
SDC2_SDCARD_D2
SDC2_SDCARD_D3
SDC2_SDCARD_CMD
SDC2_SDCARD_CLK
SDC2_SDCARD_D0
SDC2_SDCARD_D1
0R
CN2503
TF-CLE14021
DAT2
CD/DAT3
CMD
VDD
CLK
VSS
DAT0
DAT1
PIN3
PIN5
PIN6
NC_1
NC_2
NC_3
NC_4
NC_5
NC_6
NC_7
NC_8
C2506
225
C2505
104
D2516
LESD8D5.0CT5G 15pF

SIM2 Card

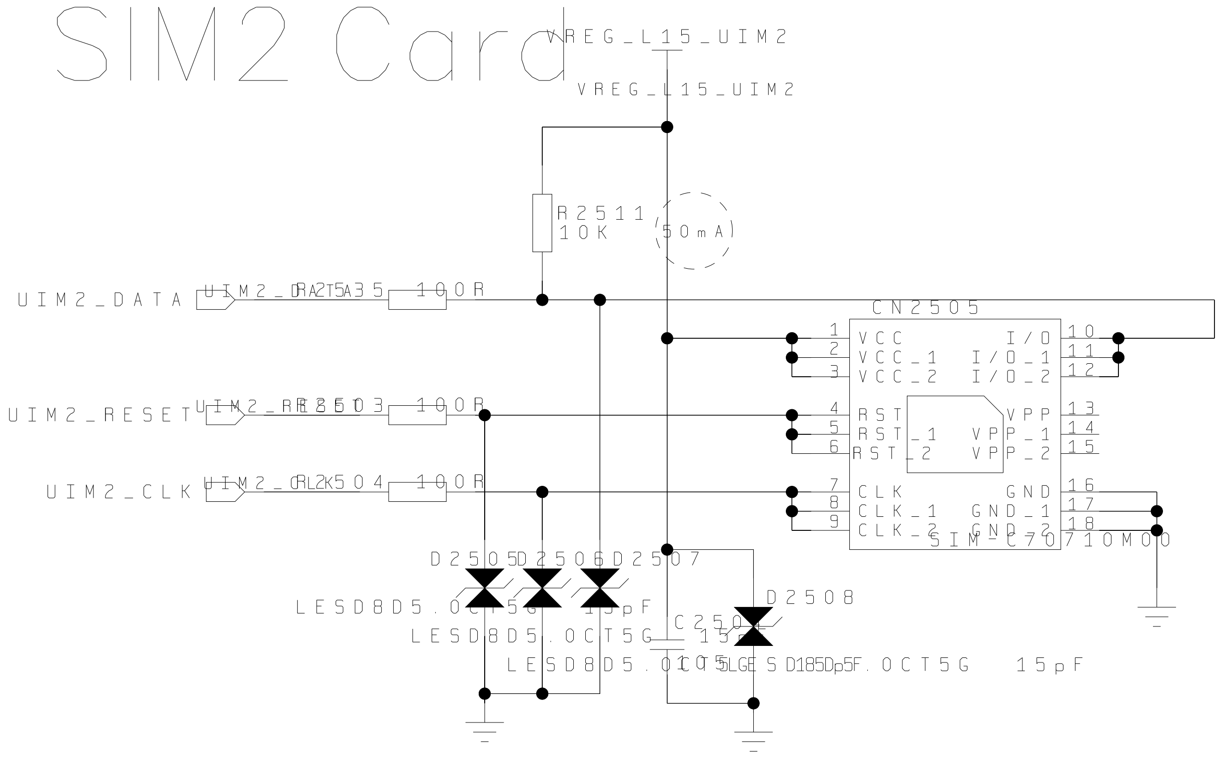
VREG_L15_UIM2
R2511
10K
50mA
UIM2_DATA
R2503
100R
UIM2_RESET
100R
UIM2_CLK
R2504
100R
CN2505
VCC
VCC_1
VCC_2
I/O
I/O_1
I/O_2
RST
RST_1
RST_2
VPP
VPP_1
VPP_2
CLK
CLK_1
CLK_2
GND
GND_1
GND_2
SIM-C70710M00
D2505
D2506
D2507
D2508
LESD8D5.0CT5G 15pF

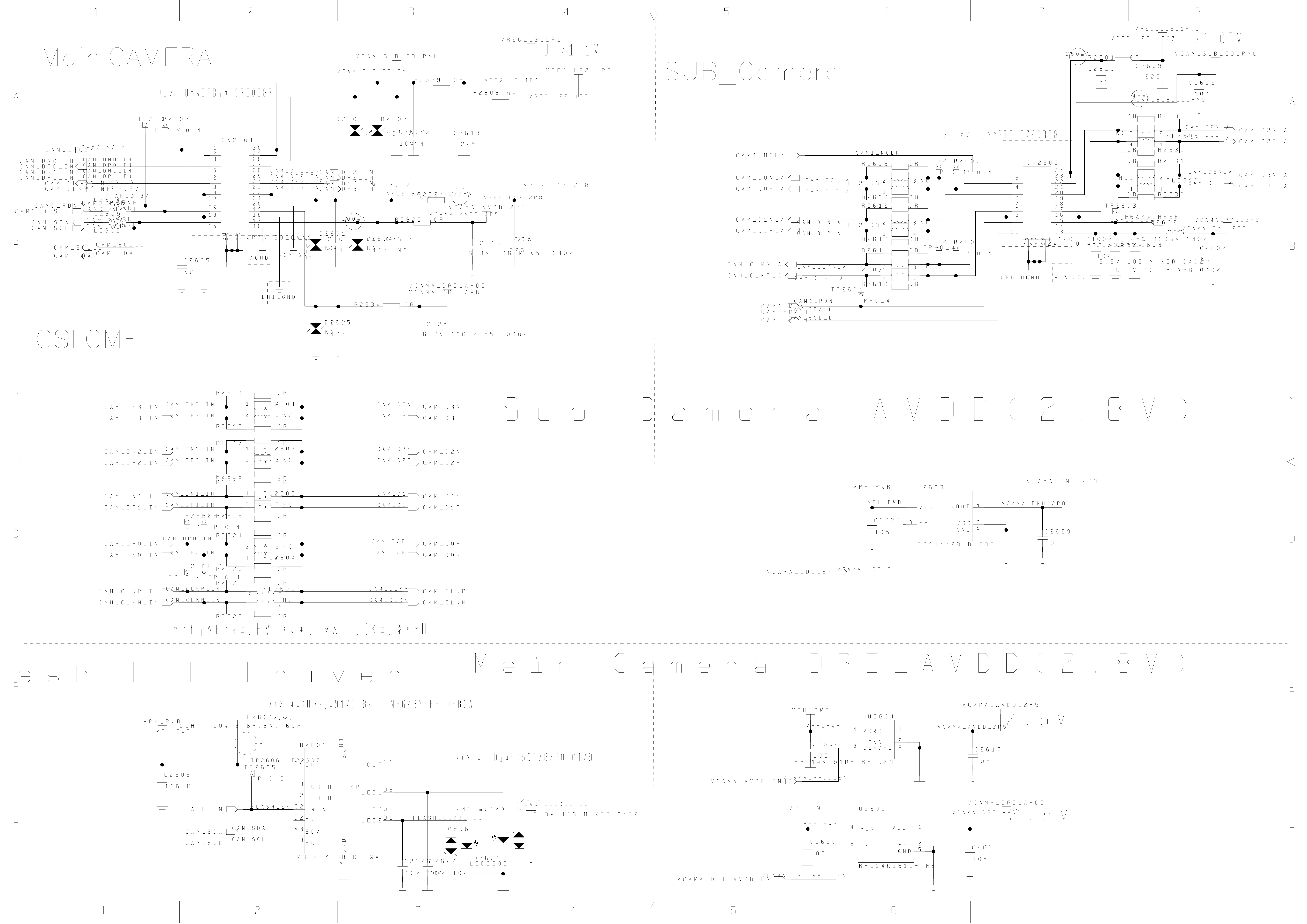
Main CAMERA
SUB_Camera
CSI CMF
Sub Camera AVDD(2.8V)
Main Camera DRI_AVDD(2.8V)
Flash LED Driver
CN2601
CN2602
VREG_L3_1P1
VCAM_SUB_IO_PMU
VREG_L22_1P8
VREG_L17_2P8
VREG_L23_1P05
VCAMA_AVDD_2P5
VCAMA_DRI_AVDD
VCAMA_PMU_2P8
CAM0_MCLK
CAM_DN0_IN
CAM_DP0_IN
CAM_DN1_IN
CAM_DP1_IN
CAM_CLKN_IN
CAM_CLKP_IN
CAM0_PDN
CAM0_RESET
CAM_SDA
CAM_SCL
CAM_DN2_IN
CAM_DP2_IN
CAM_DN3_IN
CAM_DP3_IN
AF_2.8V
D2601
D2602
D2603
D2604
R2605
R2624
R2625
R2629
R2634
C2605
C2606
C2611
C2612
C2613
C2614
C2615
C2616
C2625
6.3V 106 M X5R 0402
AGND
VCM_GND
DRI_GND
CAM1_MCLK
CAM_D0N_A
CAM_D0P_A
CAM_D1N_A
CAM_D1P_A
CAM_CLKN_A
CAM_CLKP_A
CAM_D2N_A
CAM_D2P_A
CAM_D3N_A
CAM_D3P_A
CAM1_PDN
CAM1_RESET
CAM_SDA_L
CAM_SCL_L
FL2606
FL2607
FL2608
FL2609
FL2610
R2601
R2602
R2603
R2608
R2609
R2610
R2611
R2612
R2613
R2630
R2631
R2632
R2633
C2602
C2609
C2610
C2622
TP2603
TP2604
DGND
CAM_D3N
CAM_D3P
CAM_D2N
CAM_D2P
CAM_D1N
CAM_D1P
CAM_D0P
CAM_D0N
CAM_CLKP
CAM_CLKN
FL2601
FL2602
FL2603
FL2604
FL2605
R2614
R2615
R2616
R2617
R2618
R2619
R2620
R2621
R2622
R2623
0R
NC
VPH_PWR
U2603
VIN
VOUT
CE
VSS
GND
C2628
C2629
105
RP114K281D-TRB
VCAMA_LDO_EN
U2604
VDD
GND-1
GND-2
C2604
C2617
RP114K251D-TRB DFN
VCAMA_AVDD_EN
2.5V
U2605
C2620
C2621
VCAMA_DRI_AVDD_EN
2.8V
L2601
1UH 20% 3.6A(3A) 60m
2000mA
U2601
TP2605
TP2606
TP2607
IN
SW
OUT
TORCH/TEMP
STROBE
HWEN
TX
SDA
SCL
LED1
LED2
GND
LM3643YFFR DSBGA
C2608
106 M
FLASH_EN
FLASH_LED1_TEST
FLASH_LED2_TEST
C2618
C2626
C2627
10V
104
LED2601
LED2602
2401m(1A)
1
2
3
4
5
6
7
8
A
B
C
D
E
F

CODEC

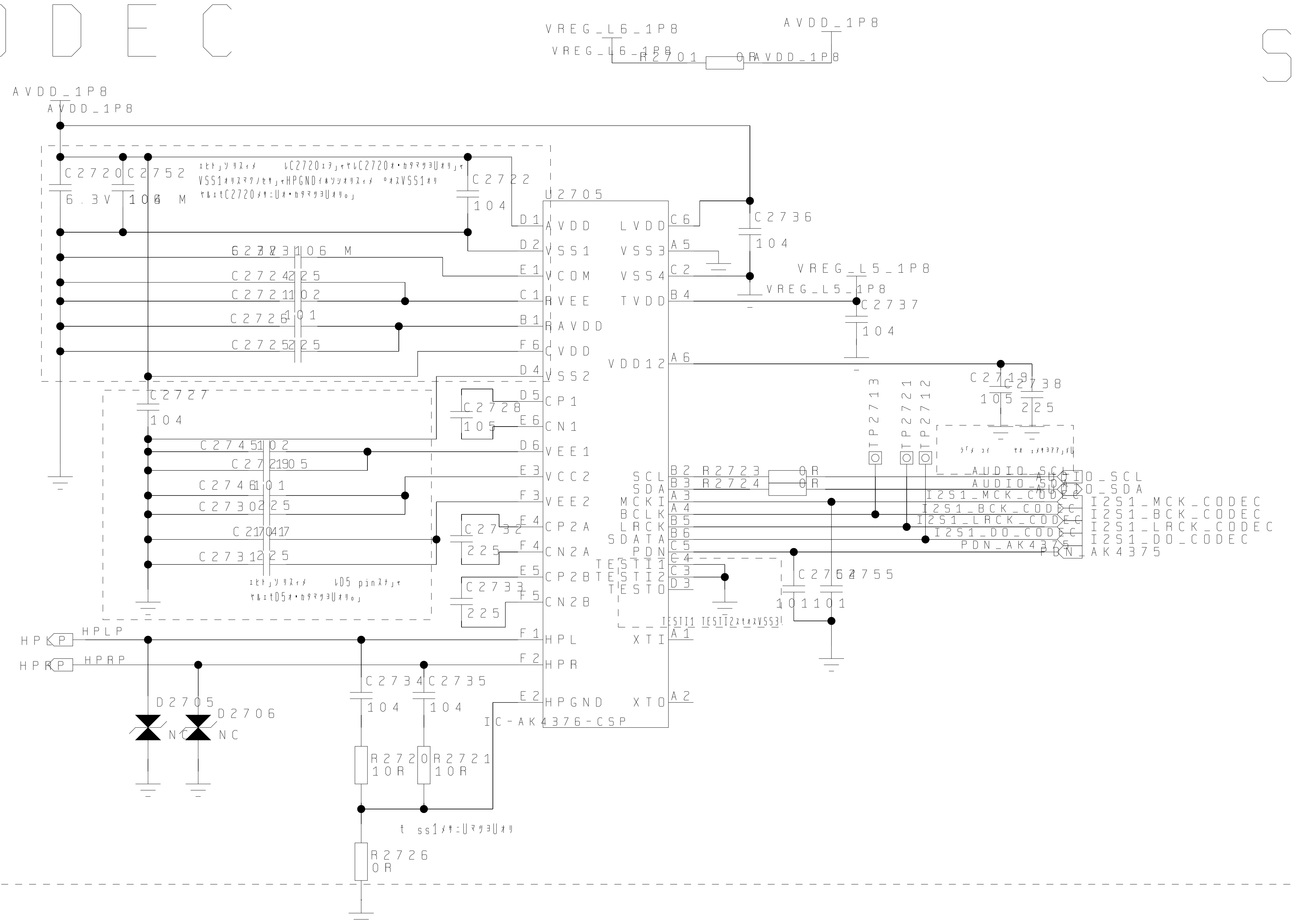

AVDD_1P8
VREG_L6_1P8
R2701 0R
U2705
IC-AK4376-CSP
C2720 C2752 6.3V 106 M
C2722 104
C2723 106 M
C2724 225
C2721 102
C2726 101
C2725 225
C2727 104
C2728 105
C2745 102
C2729 105
C2746 101
C2730 225
C2717 047
C2731 225
C2732 225
C2733 225
C2736 104
C2737 104
C2718 105
C2738 225
C2756 C2755 101 101
AVDD VSS1 VCOM AVEE HVDD CVDD VSS2 CP1 CN1 VEE1 VCC2 VEE2 CP2A CN2A CP2B CN2B HPL HPR HPGND
LVDD VSS3 VSS4 TVDD VDD12 SCL SDA MCKI BCLK LRCK SDATA PDN TEST1 TEST2 TEST0 XTI XTO
VREG_L5_1P8
R2723 0R
R2724 0R
TP2713 TP2721 TP2712
AUDIO_SCL
AUDIO_SDA
I2S1_MCK_CODEC
I2S1_BCK_CODEC
I2S1_LRCK_CODEC
I2S1_DO_CODEC
PDN_AK4375
HPLP
HPRP
D2705 NC
D2706 NC
C2734 104
C2735 104
R2720 10R
R2721 10R
R2726 0R

SMART PA

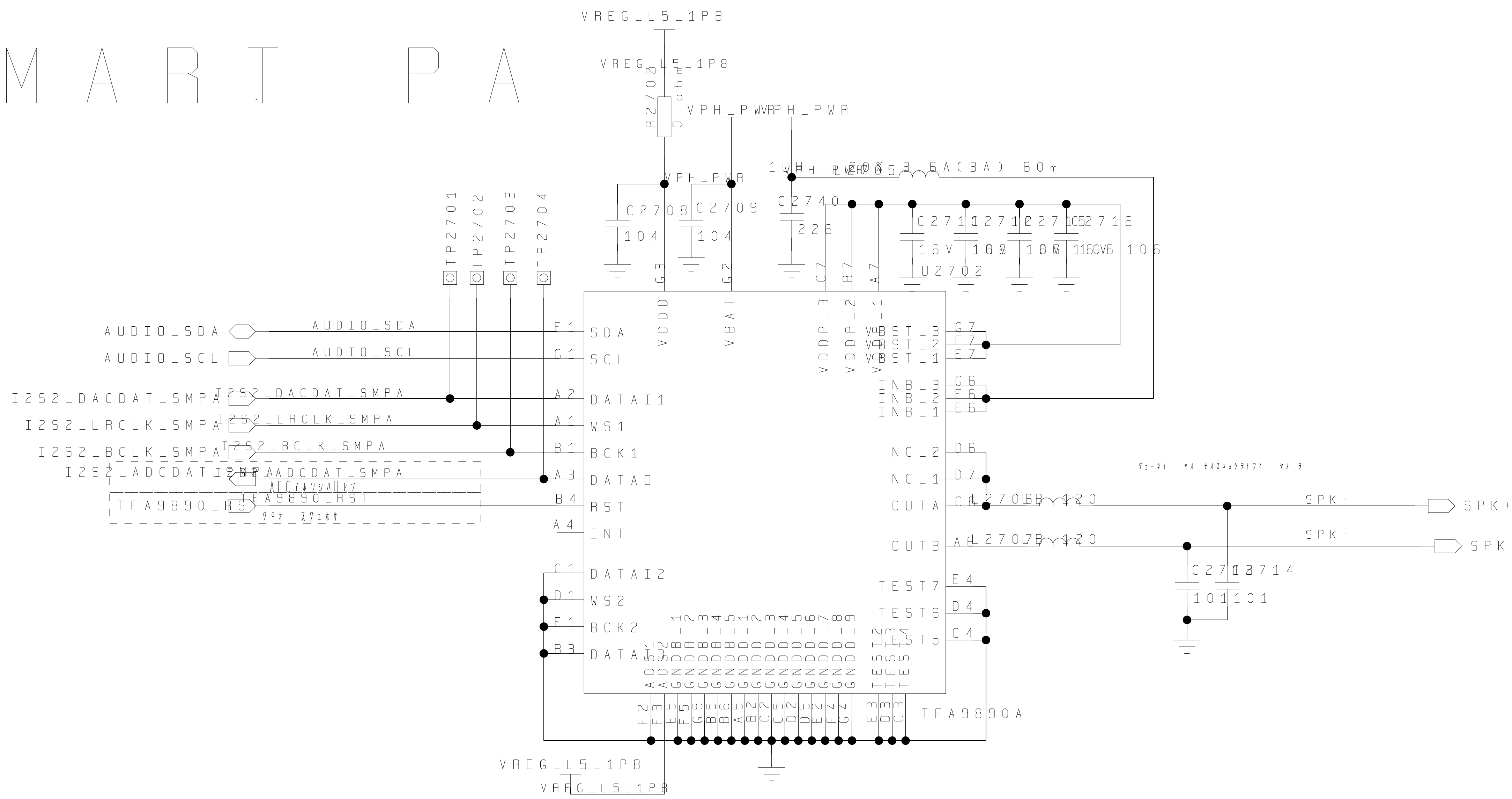

VREG_L5_1P8
R2703 0 ohm
VPH_PWR
1UH 6A(3A) 60m
C2708 104
C2709 104
C2740 226
C2711 C2712 C2715 C2716 16V 106 106 106 106
U2702
TFA9890A
TP2701 TP2702 TP2703 TP2704
AUDIO_SDA
AUDIO_SCL
I2S2_DACDAT_SMPA
I2S2_LRCLK_SMPA
I2S2_BCLK_SMPA
I2S2_ADCDAT_SMPA
TFA9890_RST
SDA SCL DATAI1 WS1 BCK1 DATAO RST INT DATAI2 WS2 BCK2 DATAI3
VDDD VBAT VDDP BST INB NC_2 NC_1 OUTA OUTB TEST7 TEST6 TEST5
L2705 120
L2706 120
C2713 C2714 101 101
SPK+
SPK-
VREG_L5_1P8

Speaker

Ant—Noise MIC

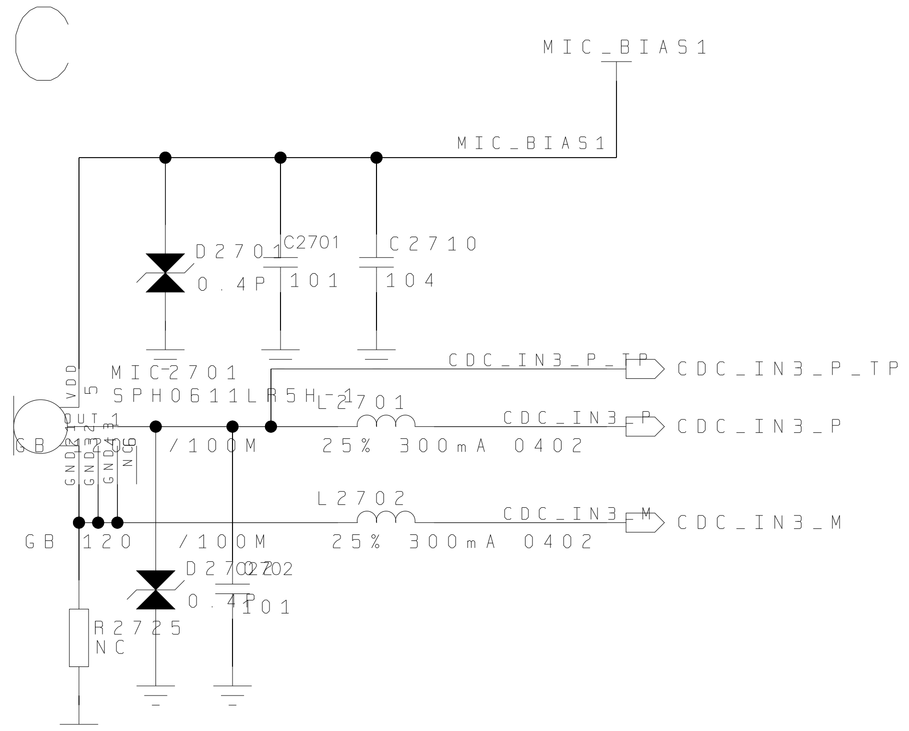

MIC_BIAS1
D2701 0.4P
C2701 101
C2710 104
MIC2701
SPH0611LR5H-1
GB 120 /100M
L2701 25% 300mA 0402
L2702 25% 300mA 0402
CDC_IN3_P_TP
CDC_IN3_P
CDC_IN3_M
D2702 0.4P
C2702 101
R2725 NC

Receiver

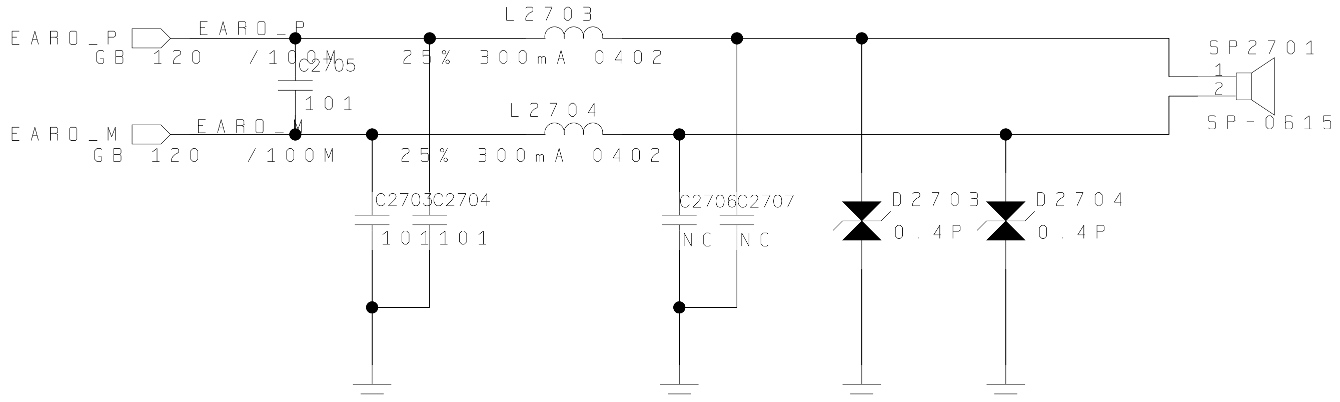

EAR0_P
EAR0_M
GB 120 /100M
C2705 101
L2703 25% 300mA 0402
L2704 25% 300mA 0402
C2703 C2704 101 101
C2706 C2707 NC NC
D2703 0.4P
D2704 0.4P
SP2701
SP-0615

N V P & O V P

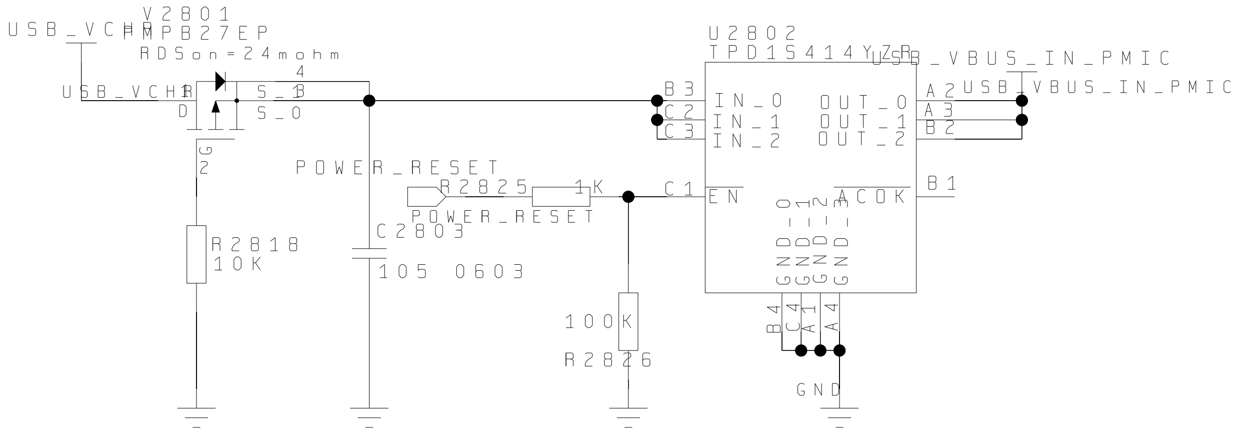
USB_VCHR
V2801
PMPB27EP
RDSon=24mohm
USB_VCHR
1
D
4
S_1
3
S_0
G
2
R2818
10K
C2803
105 0603
POWER_RESET
R2825
1K
POWER_RESET
100K
R2826
U2802
TPD1S414YZR
B3
C2
C3
IN_0
IN_1
IN_2
C1
EN
OUT_0
OUT_1
OUT_2
A2
A3
B2
USB_VBUS_IN_PMIC
USB_VBUS_IN_PMIC
ACOK
B1
GND_0
GND_1
GND_2
GND_3
B4
C4
A1
A4
GND

Note:
1｣ｩ5Vｵ ｹｳ ｺOVLOｽﾅｽﾓｵﾘｼｴｿﾉ｣ｬｹUﾑｹﾋUｶｨﾖｵﾎｪ6.8V｣ｻ
2｣ｩ9Vｸﾟﾑｹｳ ｺR2826ﾑｰｴU1.2M｣ｬR2825ﾑｰｴU150K｣ｬｹUﾑｹﾋUｶｨﾖｵﾎｪ10.98V｣ｻ

HW RESET

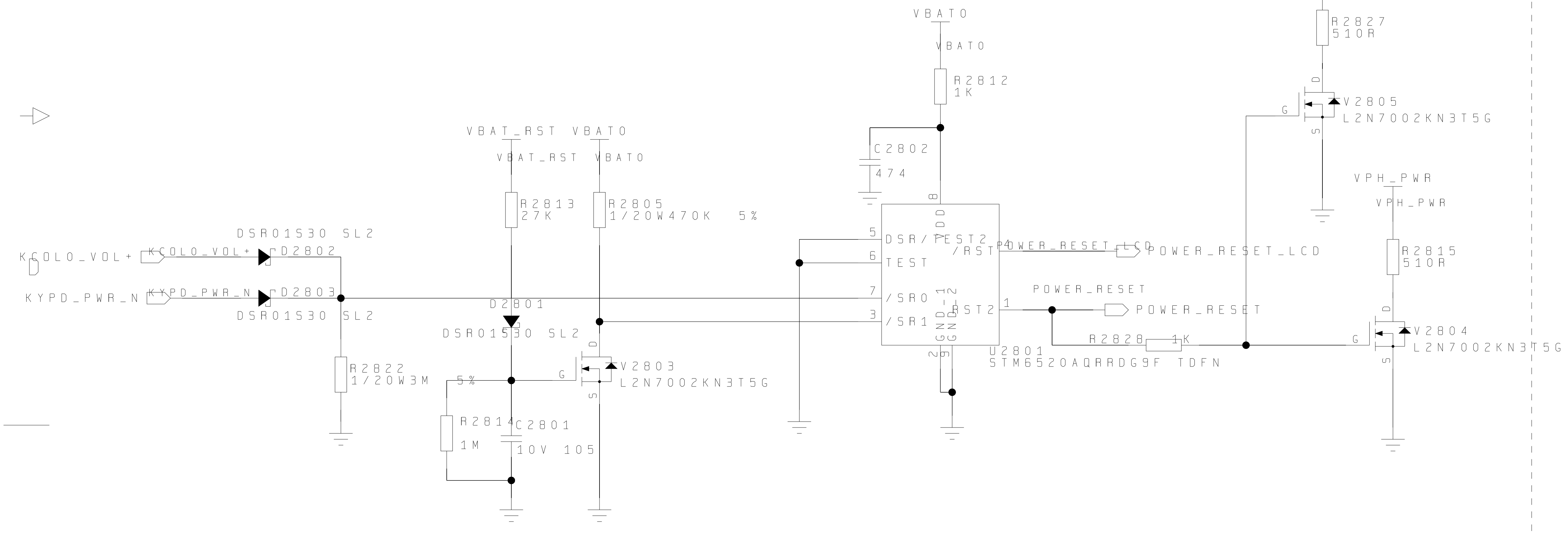
KCOLO_VOL+
KCOLO_VOL+
D2802
DSR01S30 SL2
KYPD_PWR_N
KYPD_PWR_N
D2803
DSR01S30 SL2
R2822
1/20W3M
VBAT_RST VBATO
VBAT_RST VBATO
R2813
27K
R2805
1/20W470K 5%
D2801
DSR01S30 SL2
5%
R2814
1M
C2801
10V 105
V2803
L2N7002KN3T5G
G
D
S
VBATO
VBATO
R2812
1K
C2802
474
5
DSR/TEST2
6
TEST
7
/SR0
3
/SR1
8
VDD
/RST
4
RST2
1
GND_1
GND_2
2
9
U2801
STM6520AQRRDG9F TDFN
POWER_RESET_LCD
POWER_RESET_LCD
POWER_RESET
POWER_RESET
R2828
1K
VBAT_RST
VBAT_RST
R2827
510R
V2805
L2N7002KN3T5G
VPH_PWR
VPH_PWR
R2815
510R
V2804
L2N7002KN3T5G

BAT_MOSFET

VPH_PWRﾊﾇｪﾓｳ Cｵﾄﾏｵﾍｳｹｩｵ Uｶﾋﾈｫｵ U
VBATOﾊﾇﾖｱｽﾓｪﾓｵ ﾘﾈｫｵ UU
VBAT_RSTﾊﾇｪﾓｸｪﾎｻMOSｹﾜﾊ Uｶﾋﾈｫｵ Uﾑ,78

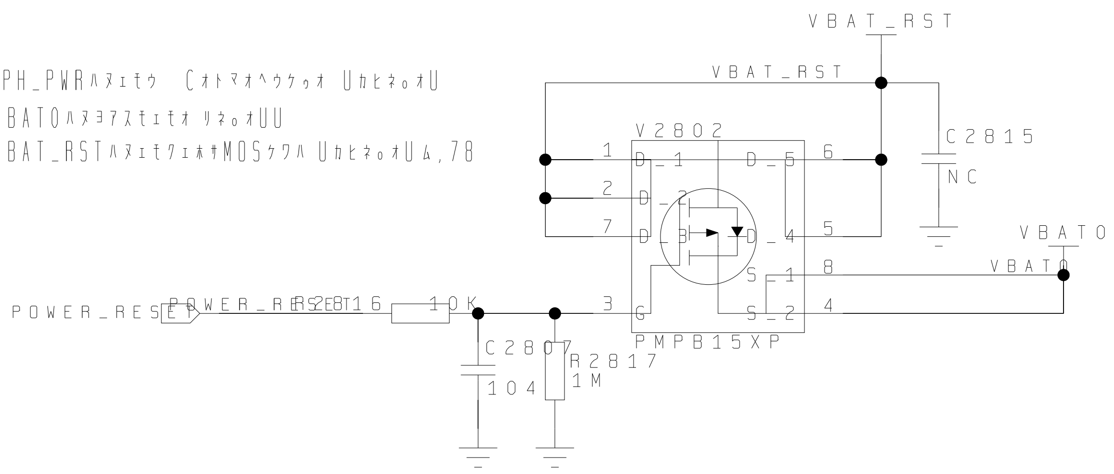
VBAT_RST
VBAT_RST
V2802
1
D_1
2
D_2
7
D_3
6
D_5
5
D_4
8
S_1
4
S_2
3
G
PMPB15XP
C2815
NC
VBATO
VBATO
POWER_RESET
POWER_RESET
R2816
10K
C2807
104
R2817
1M

B A T

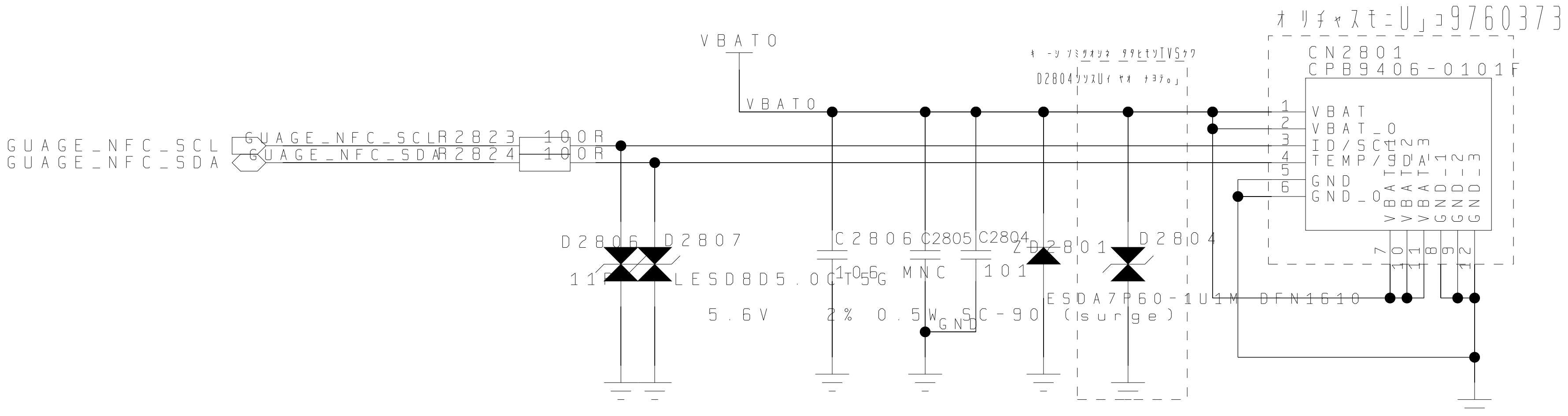
ｵ ﾘｼﾆｽﾓｿﾚ:U｣ｺ9760373
GUAGE_NFC_SCL
GUAGE_NFC_SCL
GUAGE_NFC_SDA
GUAGE_NFC_SDA
R2823
100R
R2824
100R
VBATO
VBATO
D2806
D2807
11P
LESD8D5.0CT5G
5.6V
C2806
106
C2805
MNC
C2804
101
2% 0.5W SC-90
GND
ZD2801
D2804
ESDA7P60-1U1M DFN1610
(surge)
ｷ ｰｼ ﾌﾐｻｵｼｸ ﾀﾀﾋｬTVSｹﾜ
D2804ｿｼﾇUｲ ﾃｵ ﾅﾖﾃｫ｣
CN2801
CPB9406-0101F
1
VBAT
2
VBAT_0
3
ID/SCL
4
TEMP/SDA
5
GND
6
GND_0
VBAT_1
VBAT_2
VBAT_3
GND_1
GND_2
GND_3
7
10
11
8
9
12

FAST CHARGE

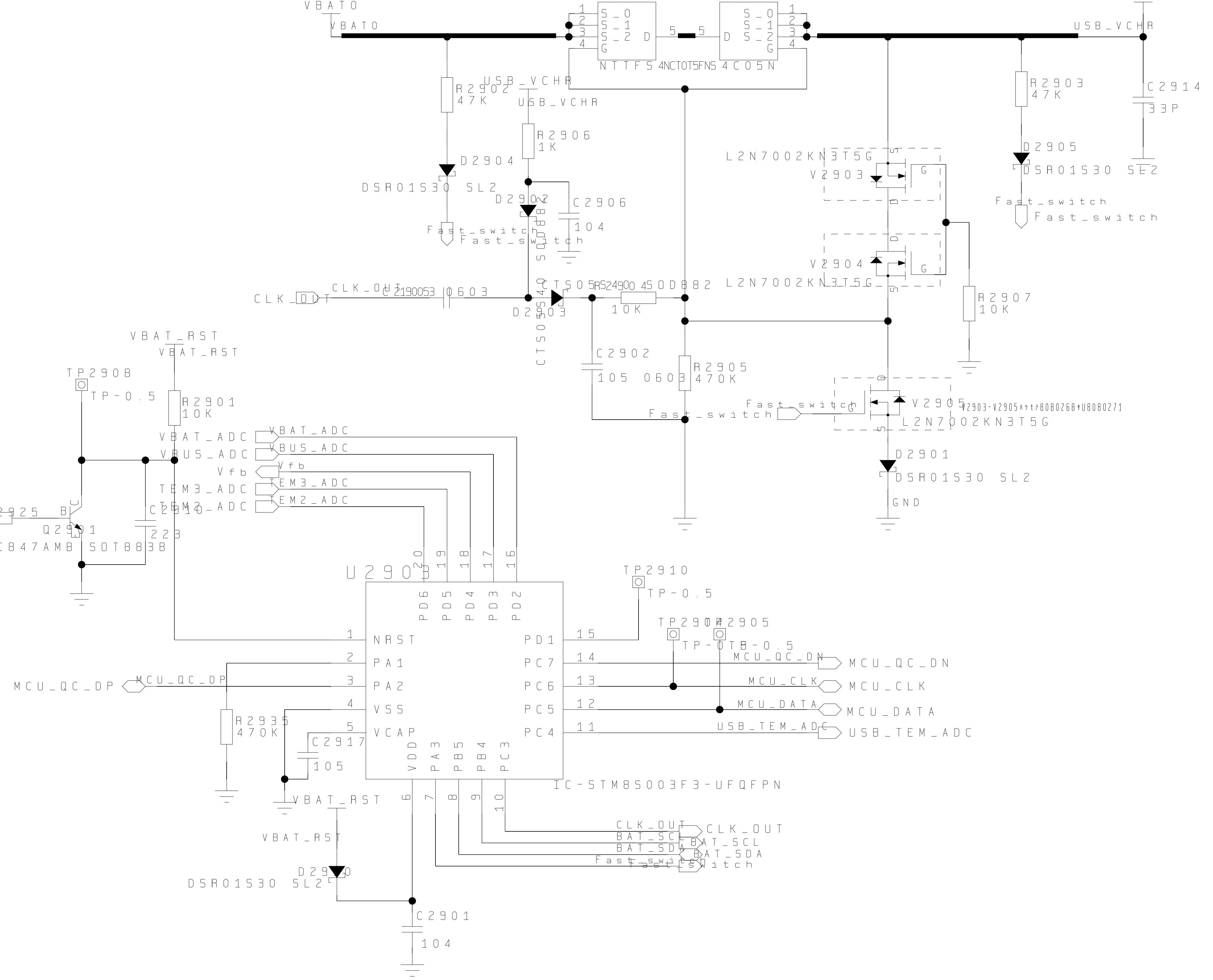
VBAT0
V2901
V2902
NTTF5 4NC0T0FNS 4C05N
USB_VCHR
R2902
47K
R2906
1K
D2904
DSR01S30 SL2
C2906
104
Fast_switch
R2903
47K
C2914
33P
D2905
DSR01S30 SL2
L2N7002KN3T5G
V2903
V2904
CLK_OUT
CLK
D2903
R2907
10K
C2902
105 0603
R2905
470K
V2905
D2901
GND
TP2908
TP-0.5
VBAT_RST
R2901
10K
VBAT_ADC
VBUS_ADC
Vfb
TEM3_ADC
TEM2_ADC
MCU_EN
R2925
Q2901
BC847AMB SOT883B
C2910
223
U2903
NRST
PA1
PA2
VSS
VCAP
VDD
PA3
PB5
PB4
PC3
PD6
PD5
PD4
PD3
PD2
PD1
PC7
PC6
PC5
PC4
TP2910
TP2909
TP2905
MCU_QC_DN
MCU_CLK
MCU_DATA
USB_TEM_ADC
MCU_QC_DP
R2935
470K
C2917
105
IC-STM8S003F3-UFQFPN
CLK_OUT
BAT_SCL
BAT_SDA
Fast_switch
D2902
DSR01S30 SL2
C2901
104

ADC,

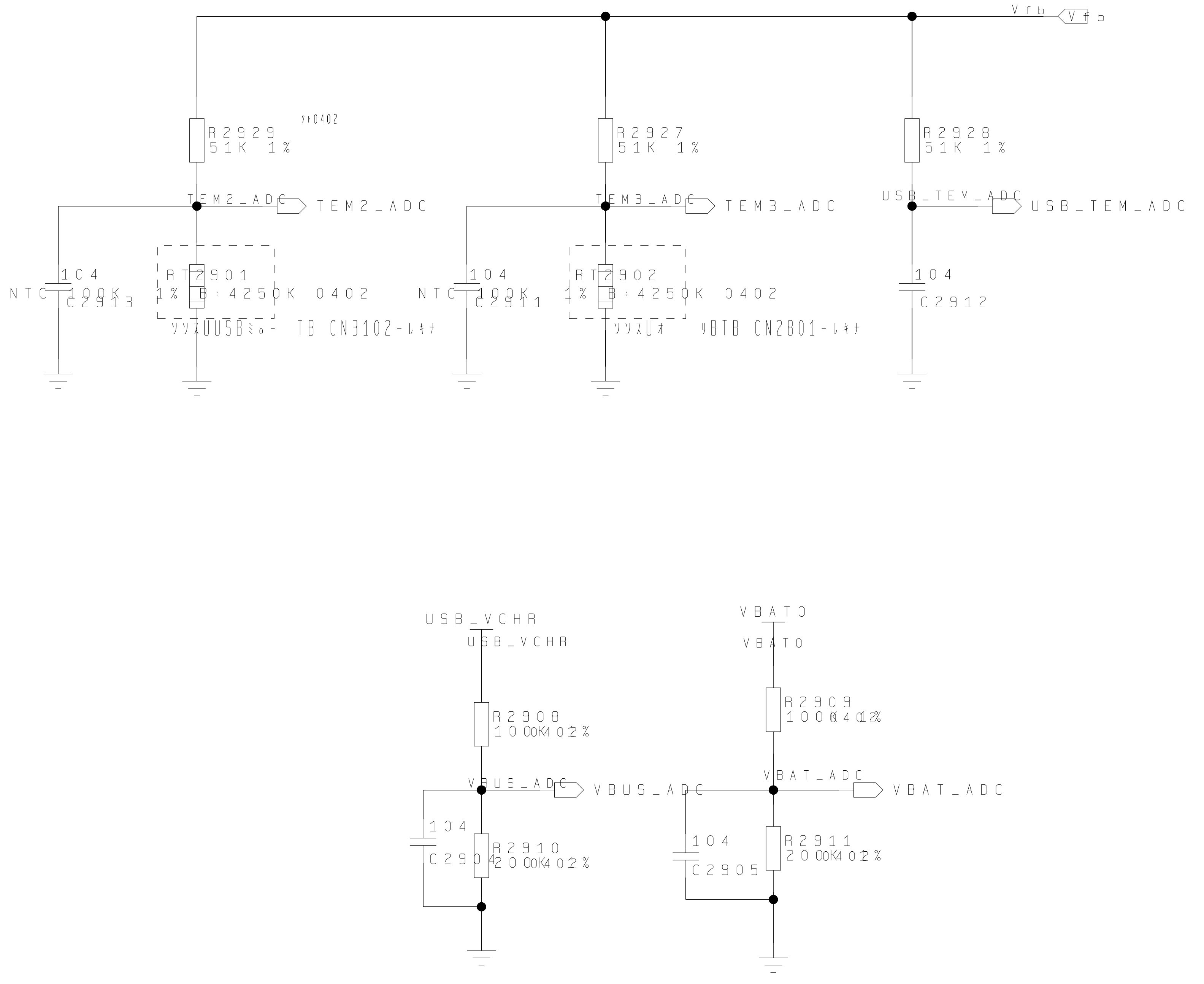
Vfb
R2929
51K 1%
R2927
51K 1%
R2928
51K 1%
TEM2_ADC
TEM3_ADC
USB_TEM_ADC
NTC 100K
C2913
104
RT2901
1% B 4250K 0402
C2911
104
RT2902
1% B 4250K 0402
C2912
104
USB_VCHR
VBAT0
R2908
100K 402 1%
R2909
100K 402 1%
VBUS_ADC
VBAT_ADC
R2910
200K 402 1%
R2911
200K 402 1%
C2904
104
C2905
104

USBｿｪｸﾘ

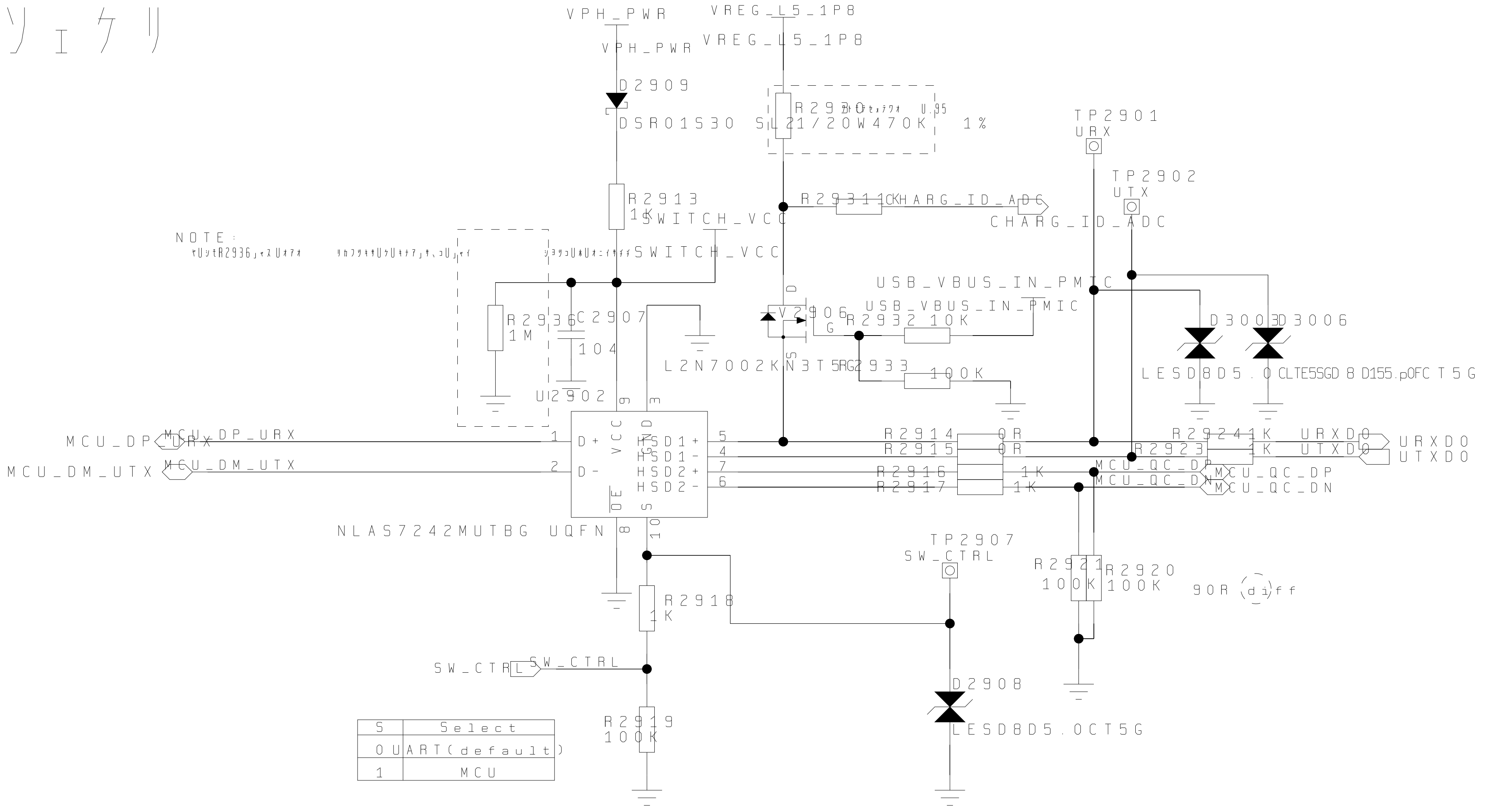
VPH_PWR
VREG_L5_1P8
D2909
DSR01S30 SL2
R2930
1/20W 470K 1%
TP2901
URX
TP2902
UTX
R2913
1K
R2931
CHARG_ID_ADC
SWITCH_VCC
NOTE:
R2936
1M
C2907
104
V2906
L2N7002KN3T5G
USB_VBUS_IN_PMIC
R2932 10K
R2933
100K
D3005
D3006
LESD8D5.0CT5G
15pF
U2902
MCU_DP_URX
MCU_DM_UTX
D+
D-
HSD1+
HSD1-
HSD2+
HSD2-
R2914
R2915
R2916
R2917
R2923
R2924
URXD0
UTXD0
MCU_QC_DP
MCU_QC_DN
NLAS7242MUTBG UQFN
TP2907
SW_CTRL
R2918
1K
R2921
100K
R2920
100K
90R (diff)
D2908
LESD8D5.0CT5G
R2919
100K

S	Select
0	UART(default)
1	MCU

ｵ　ｽﾗｪｻｻIC

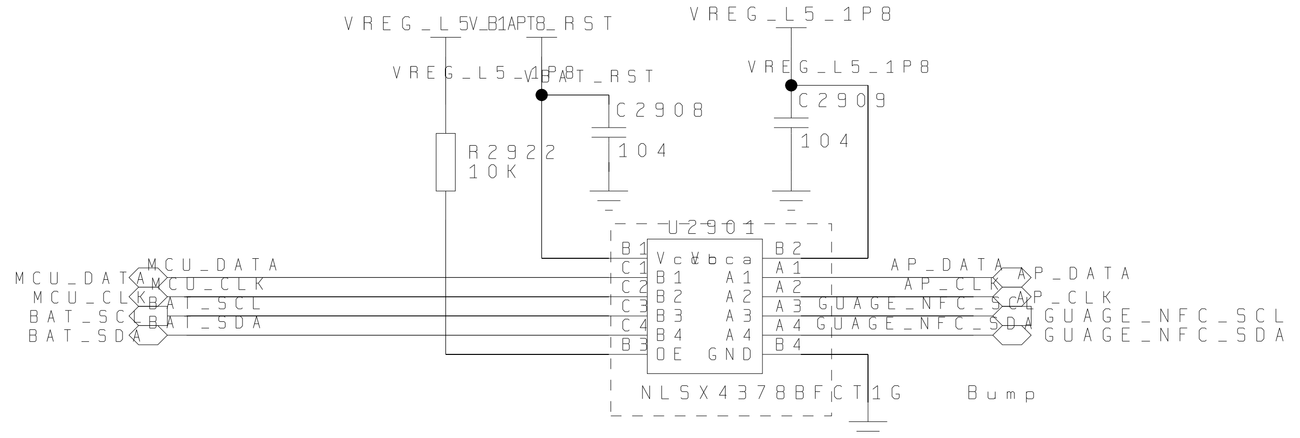
VREG_L5_1P8
VREG_L5_1P8
VBAT_RST
R2922
10K
C2908
104
C2909
104
U2901
MCU_DATA
MCU_CLK
BAT_SCL
BAT_SDA
AP_DATA
AP_CLK
GUAGE_NFC_SCL
GUAGE_NFC_SDA
VccB
Vcca
B1
B2
B3
B4
A1
A2
A3
A4
OE
GND
NLSX4378BFCT1G
Bump

USB Switch

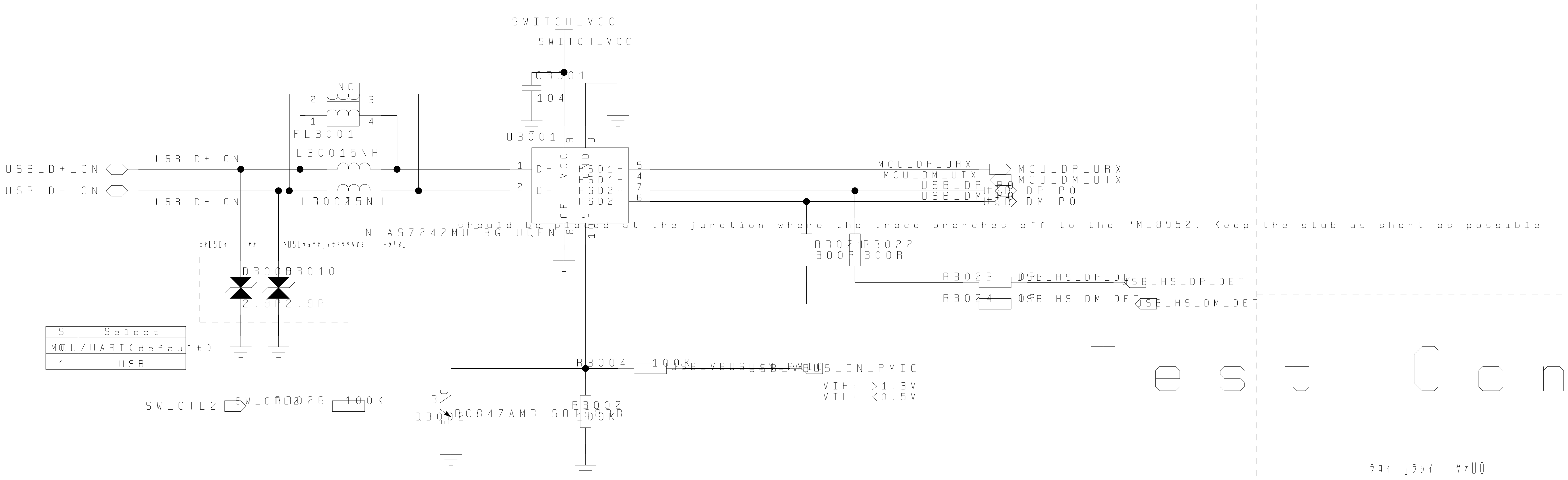
SWITCH_VCC
SWITCH_VCC
C3001
104
U3001
NC
FL3001
L3001 5NH
L3002 5NH
USB_D+_CN
USB_D-_CN
USB_D+_CN
USB_D-_CN
D3009
D3010
2.9P
2.9P
D+
D-
VCC
HSD1+
HSD1-
HSD2+
HSD2-
OE
S
NLAS7242MUTBG UQFN
MCU_DP_URX
MCU_DM_UTX
USB_DP_PO
USB_DM_PO
MCU_DP_URX
MCU_DM_UTX
USB_DP_PO
USB_DM_PO
R3021
300R
R3022
300R
R3023
R3024
USB_HS_DP_DET
USB_HS_DM_DET
USB_HS_DP_DET
USB_HS_DM_DET
D3004
100K
USB_VBUS_IN_PMIC
USB_VBUS_IN_PMIC
VIH: >1.3V
VIL: <0.5V
SW_CTL2
SW_CTL2
R3026
100K
Q3002
BC847AMB SOT883B
R3002
100K

should be placed at the junction where the trace branches off to the PMI8952. Keep the stub as short as possible

S	Select
0	MCU/UART(default)
1	USB

TEST POINT

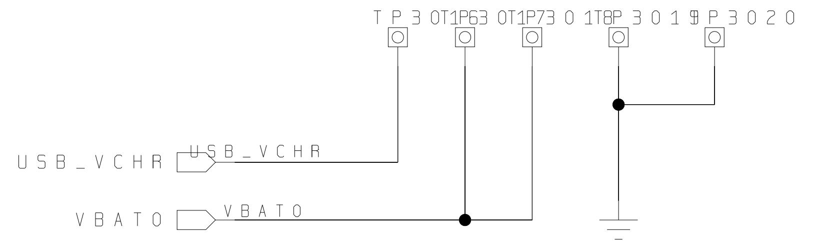
TP3016
TP3017
TP3018
TP3019
TP3020
USB_VCHR
USB_VCHR
VBAT0
VBAT0

Test Confige

BOOT MODE

CONFI_0	CONFI_1	Mode
0	0	Factory Mode
0	1	WLAN Final Test
1	0	RF mode
1	1	Ordinary Power On

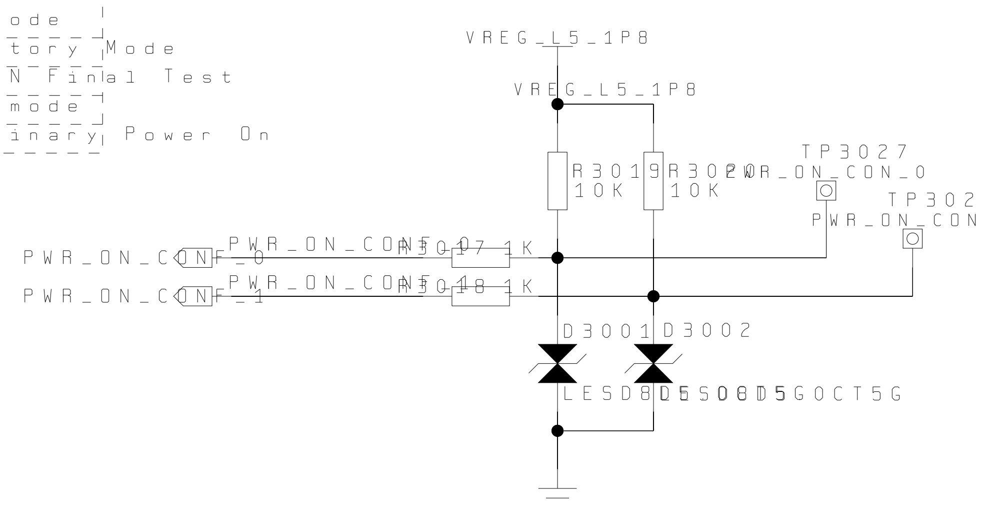
VREG_L5_1P8
VREG_L5_1P8
R3019
10K
R3020
10K
TP3027
PWR_ON_CON_0
TP3028
PWR_ON_CON_1
PWR_ON_CONF_0
PWR_ON_CONF_1
PWR_ON_CON_0
PWR_ON_CON_1
R3007
1K
R3008
1K
D3001
D3002
LESD8D5.0CT5G
LESD8D5.0CT5G

KEY PAD

V

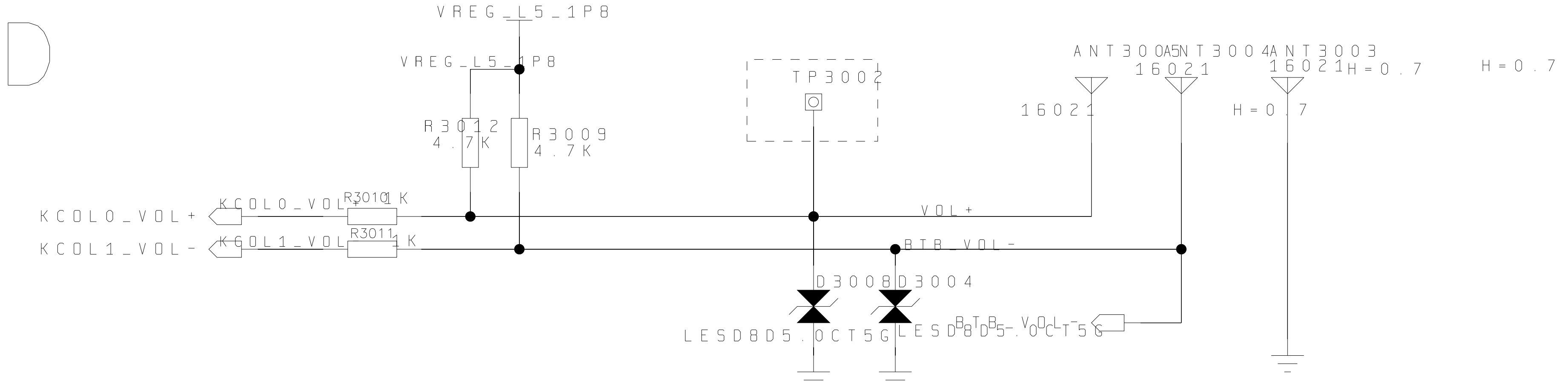
VREG_L5_1P8
VREG_L5_1P8
R3012
4.7K
R3009
4.7K
TP3002
ANT3005
ANT3004
ANT3003
16021
16021
16021
H=0.7
H=0.7
H=0.7
KCOL0_VOL+
KCOL1_VOL-
KCOL0_VOL+
KCOL1_VOL-
R3010
1K
R3011
1K
VOL+
BTB_VOL-
BTB_VOL-
D3008
D3004
LESD8D5.0CT5G
LESD8D5.0CT5G

POWERKEY

P

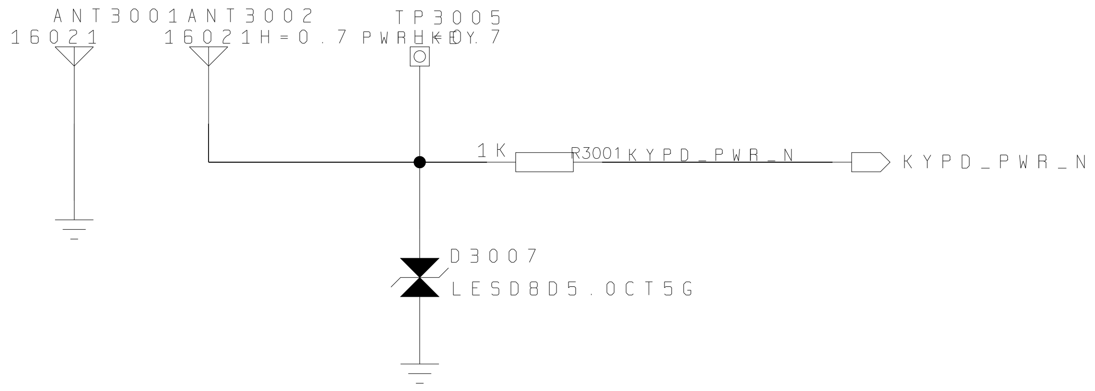
ANT3001
ANT3002
16021
16021
H=0.7
TP3005
PWRKEY
1K
R3001
KYPD_PWR_N
KYPD_PWR_N
D3007
LESD8D5.0CT5G

V3001

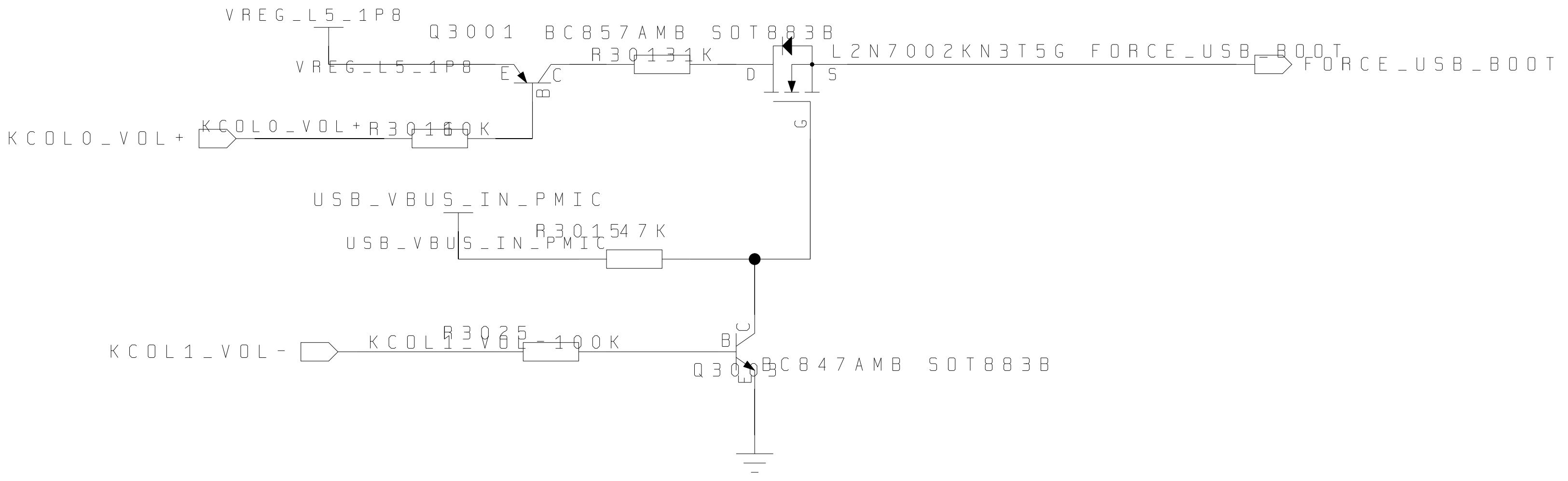
VREG_L5_1P8
VREG_L5_1P8
Q3001 BC857AMB SOT883B
R3013
1K
L2N7002KN3T5G
FORCE_USB_BOOT
FORCE_USB_BOOT
KCOL0_VOL+
KCOL0_VOL+
R3016
10K
USB_VBUS_IN_PMIC
USB_VBUS_IN_PMIC
R3015
47K
KCOL1_VOL-
KCOL1_VOL-
R3025
100K
Q3003
BC847AMB SOT883B

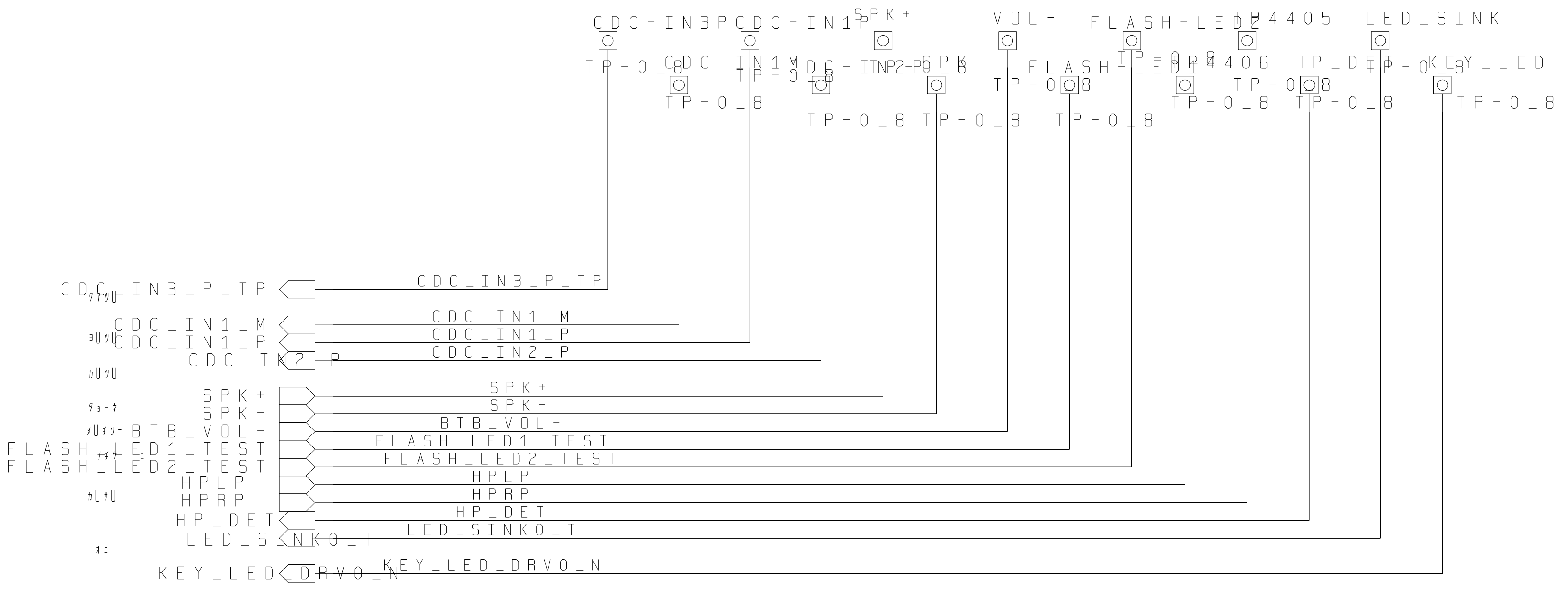
CDC-IN3P
CDC-IN1P
SPK+
VOL-
FLASH-LED0
TP4405
LED_SINK
CDC-IN1M
CDC-IN2P
SPK-
FLASH-LED1
TP4406
HP_DET
KEY_LED
TP-0.8
CDC_IN3_P_TP
CDC_IN1_M
CDC_IN1_P
CDC_IN2_P
SPK+
SPK-
BTB_VOL-
FLASH_LED1_TEST
FLASH_LED2_TEST
HPLP
HPRP
HP_DET
LED_SINK0_T
KEY_LED_DRV0_N

FPC CONNECT BTB

C A BTB K

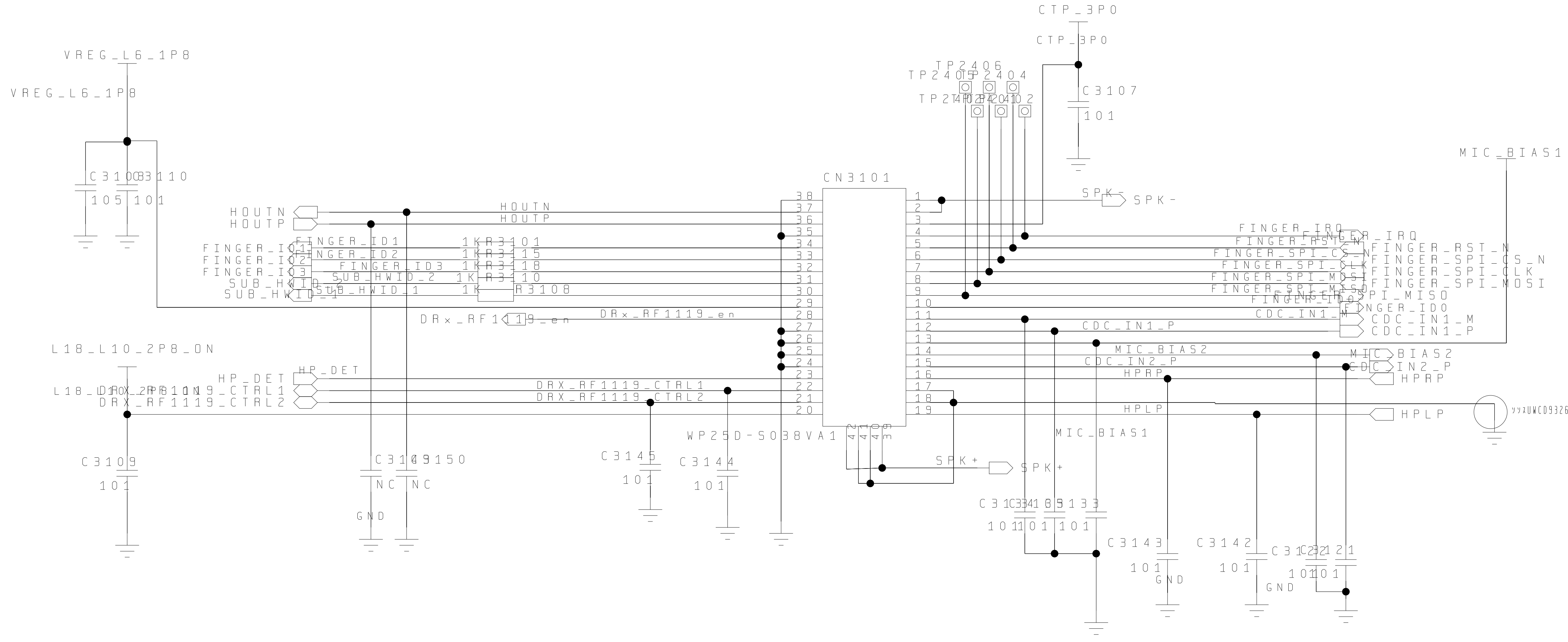
CN3101
WP25D-S038VA1
CTP_3P0
C3107
101
TP2406
TP2405
TP2404
TP2401
TP2402
TP2403
VREG_L6_1P8
C3100
C3110
105
101
HOUTN
HOUTP
FINGER_ID1
FINGER_ID2
FINGER_ID3
SUB_HWID_2
SUB_HWID_1
R3101
R3115
R3118
R3110
R3108
1K
DRx_RF1119_en
L18_L10_2P8_ON
HP_DET
DRX_RF1119_CTRL1
DRX_RF1119_CTRL2
C3109
101
C3149
C3150
NC
GND
C3145
101
C3144
101
SPK-
SPK+
FINGER_IRQ
FINGER_RST_N
FINGER_SPI_CS_N
FINGER_SPI_CLK
FINGER_SPI_MOSI
FINGER_SPI_MISO
FINGER_ID0
CDC_IN1_M
CDC_IN1_P
MIC_BIAS2
CDC_IN2_P
HPRP
HPLP
MIC_BIAS1
C3134
C3135
C3133
101
C3143
C3142
C3122
C3121
101

RGB LED DRIVER

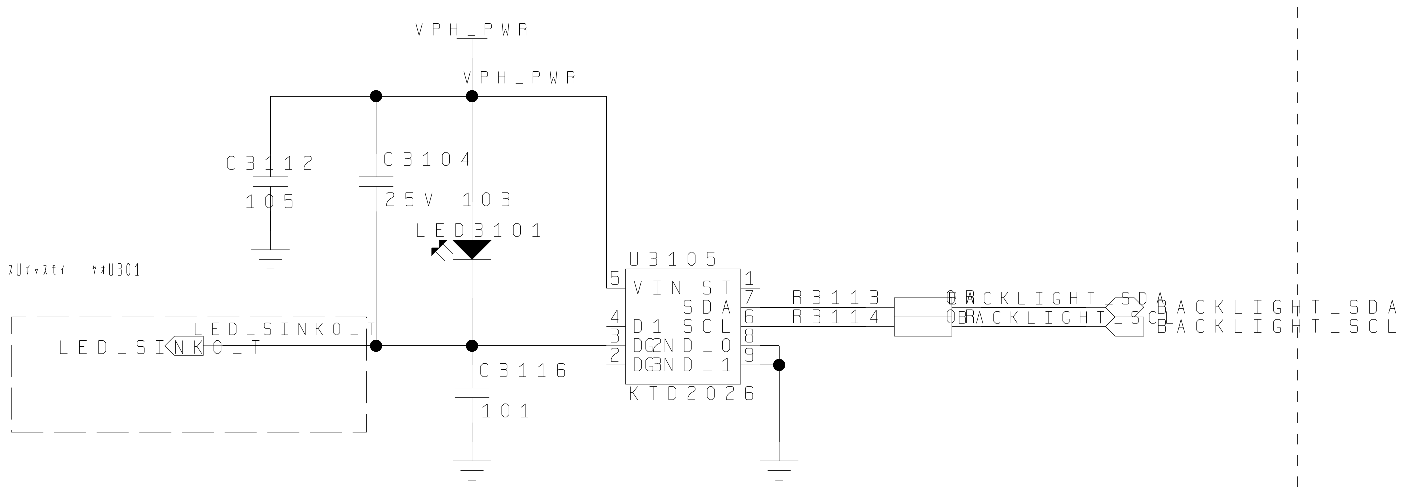
VPH_PWR
C3112
105
C3104
25V 103
LED3101
C3116
101
U3105
KTD2026
VIN ST
SDA
SCL
D1
GND_0
GND_1
R3113
R3114
BACKLIGHT_SDA
BACKLIGHT_SCL
LED_SINK0_1

Fast Charger BTB

U

MSM8976 USB_HS_ID is internally pulled high to either 3.5 V (if charger is attached) or VPH_PWR (if charger is not attached) via 315 K resistor

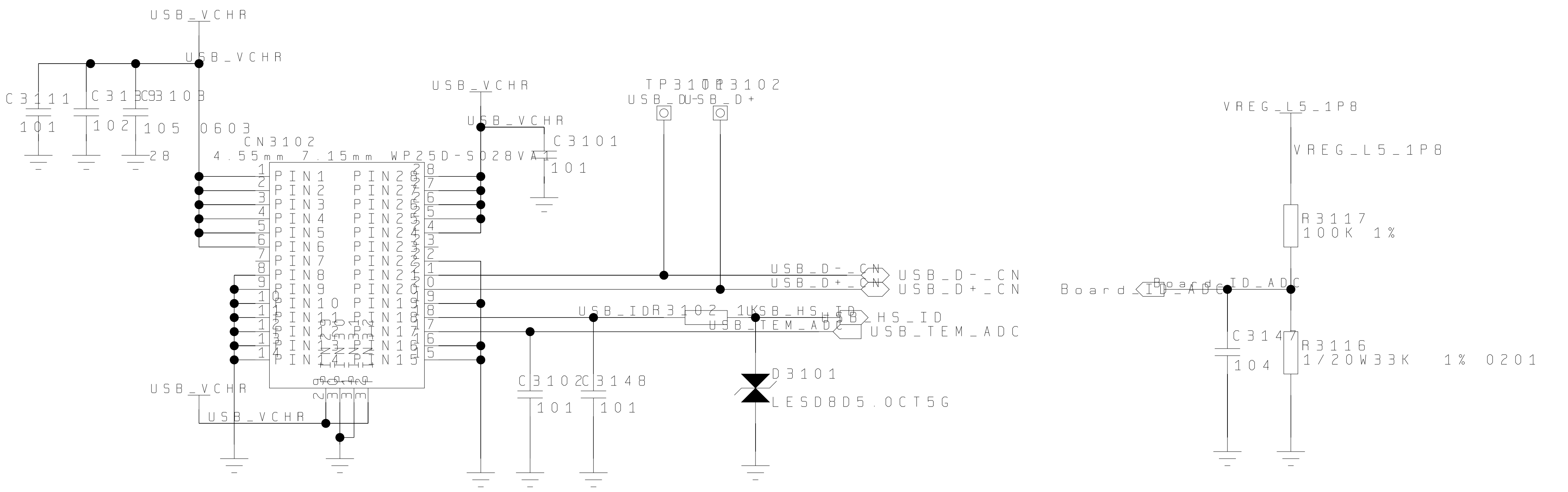
USB_VCHR
C3111
101
C3113
102
C3103
105 0603
28
CN3102
4.55mm 7.15mm WP25D-S028VA1
PIN1
PIN28
C3101
101
TP3101
TP3102
USB_DM
USB_DP
USB_D-_CN
USB_D+_CN
USB_ID
R3102
1K
USB_HS_ID
HS_ID
USB_TEM_ADC
C3102
C3148
101
D3101
LESD8D5.0CT5G
VREG_L5_1P8
R3117
100K 1%
Board_ID_ADC
C3147
104
R3116
1/20W33K 1% 0201

MARK POINT

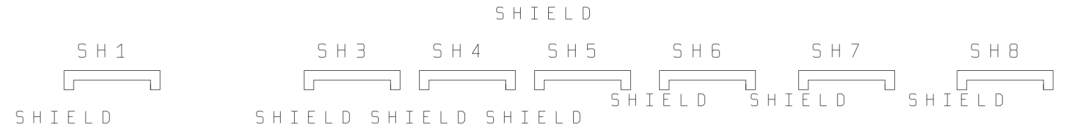
SHIELD
SH1
SH3
SH4
SH5
SH6
SH7
SH8
SHIELD

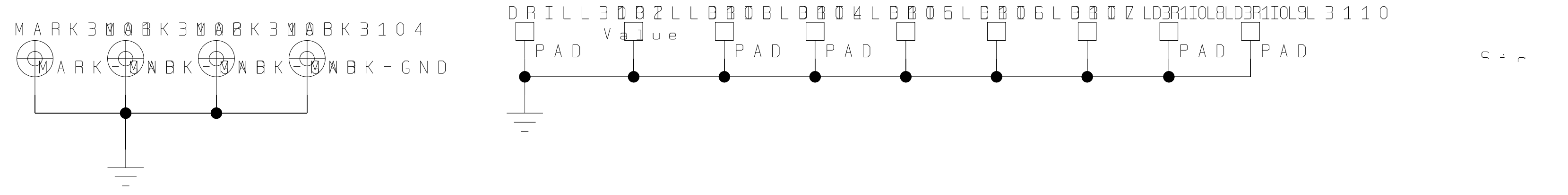
MARK3101
MARK3102
MARK3103
MARK3104
MARK-GND
DRILL3101
DRILL3102
DRILL3103
DRILL3104
DRILL3105
DRILL3106
DRILL3107
DRILL3108
DRILL3109
DRILL3110
PAD
Value

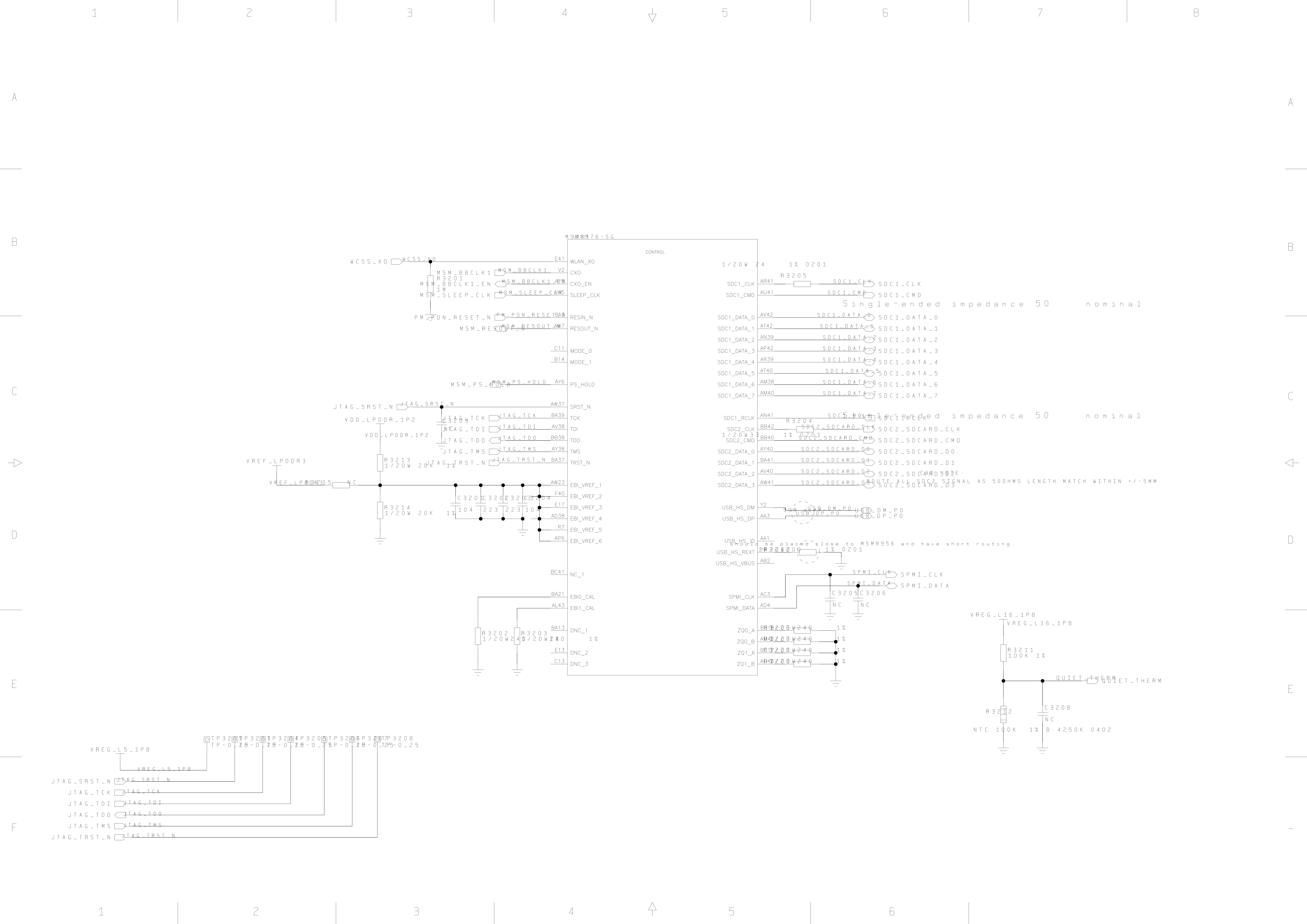
1
2
3
4
5
6
7
8
A
B
C
D
E
F
MSM8976-SG
U2801
CONTROL
WCSS_XO
E41 WLAN_XO
MSM_BBCLK1
V2 CXO
R3201
1M
MSM_BBCLK1_EN
AY8 CXO_EN
MSM_SLEEP_CLK
AW5 SLEEP_CLK
PM_PON_RESET_N
BA3 RESIN_N
MSM_RESOUT_N
AW7 RESOUT_N
C11 MODE_0
B14 MODE_1
MSM_PS_HOLD
AY6 PS_HOLD
JTAG_SRST_N
AW37 SRST_N
C3209
NC
JTAG_TCK
BA39 TCK
JTAG_TDI
AV38 TDI
JTAG_TDO
BB38 TDO
JTAG_TMS
AY38 TMS
JTAG_TRST_N
BA37 TRST_N
VDD_LPDDR_1P2
R3213
1/20W 20K 1%
VREF_LPDDR3
R3215
NC
R3214
1/20W 20K 1%
C3201
104
C3202
223
C3203
223
C3204
104
AW23 EBI_VREF_1
F40 EBI_VREF_2
E17 EBI_VREF_3
AD38 EBI_VREF_4
R7 EBI_VREF_5
AP6 EBI_VREF_6
BC41 NC_1
BA21 EBI0_CAL
AL43 EBI1_CAL
R3202
1/20W 240
R3203
1/20W 240
1%
BA13 DNC_1
E13 DNC_2
C13 DNC_3
R3205
1/20W 24 1% 0201
SDC1_CLK AR41
SDC1_CMD AU41
SDC1_DATA_0 AV42
SDC1_DATA_1 AT42
SDC1_DATA_2 AN39
SDC1_DATA_3 AP42
SDC1_DATA_4 AR39
SDC1_DATA_5 AT40
SDC1_DATA_6 AM38
SDC1_DATA_7 AM40
SDC1_RCLK AN41
R3204
1/20W33 1% 0201
SDC2_CLK BB42
SDC2_CMD BB40
SDC2_DATA_0 AY40
SDC2_DATA_1 BA41
SDC2_DATA_2 AV40
SDC2_DATA_3 AW41
SDC2_SDCARD_CLK
SDC2_SDCARD_CMD
SDC2_SDCARD_D0
SDC2_SDCARD_D1
SDC2_SDCARD_D2
SDC2_SDCARD_D3
USB_HS_DM Y2
USB_HS_DP AA3
90R diff
USB_DM_P0
USB_DP_P0
USB_HS_ID AA1
USB_HS_REXT Y8
R3210
1/20W200 1% 0201
USB_HS_VBUS AB2
SPMI_CLK AC3
SPMI_DATA AD4
SPMI_CLK
SPMI_DATA
C3205
NC
C3206
NC
ZQ0_A BB13
ZQ0_B AM42
ZQ1_A BB17
ZQ1_B AB43
R3206 1/20W 240 1%
R3207 1/20W 240 1%
R3208 1/20W 240 1%
R3209 1/20W 240 1%
VREG_L16_1P8
R3211
100K 1%
QUIET_THERM
R3212
NTC 100K 1% B:4250K 0402
C3208
NC
VREG_L5_1P8
TP3201 TP3202 TP3203 TP3204 TP3205 TP3206 TP3207 TP3208
TP-0_25
JTAG_SRST_N
JTAG_TCK
JTAG_TDI
JTAG_TDO
JTAG_TMS
JTAG_TRST_N

Single-ended impedance 50 nominal

Single-ended impedance 50 nominal

CAD NOTE:
ROUTE ALL SDC2 SIGNAL AS 50OHMS LENGTH MATCH WITHIN +/-5MM

should be placed close to MSM8956 and have short routing.

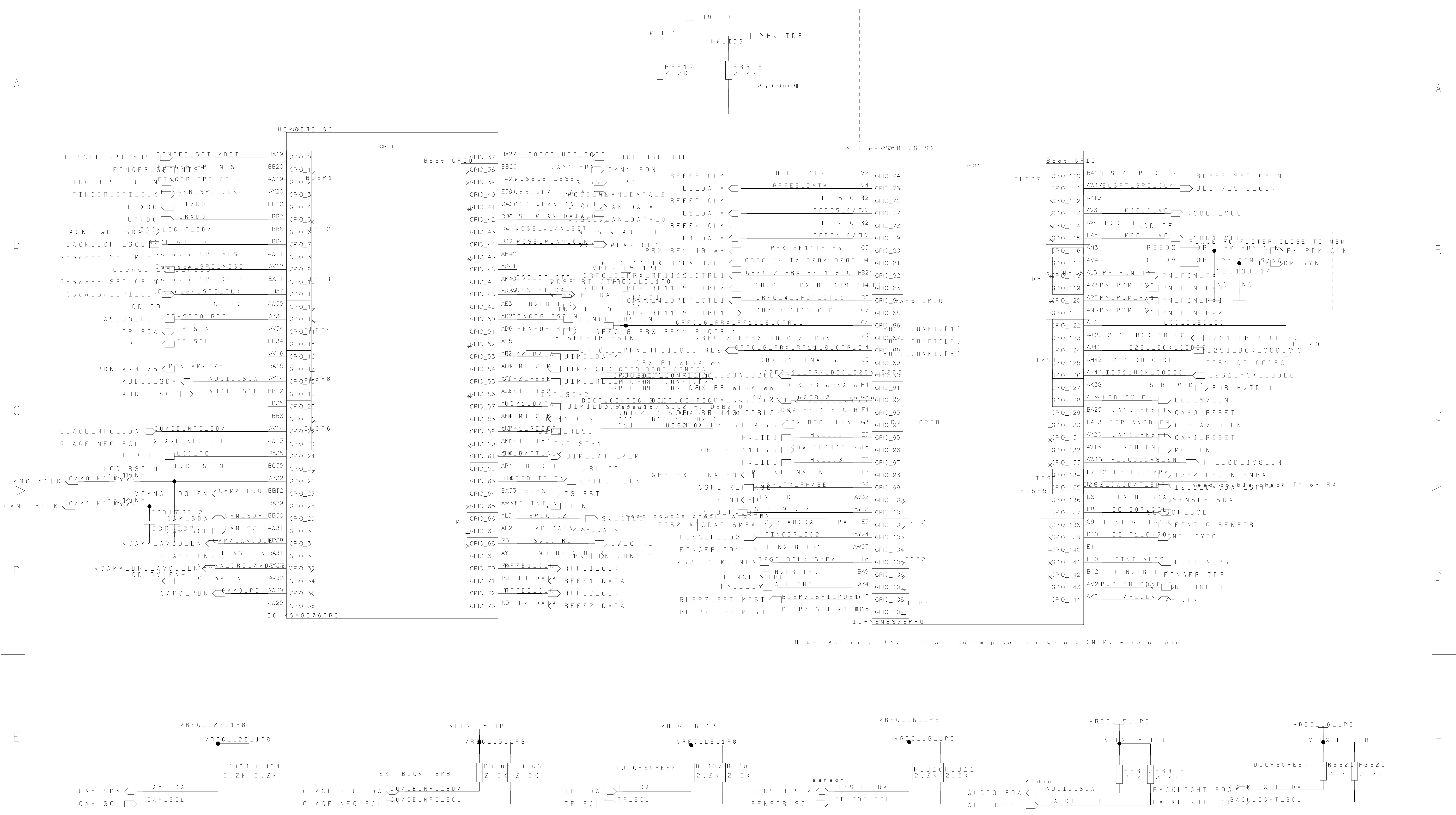
HW_ID1
HW_ID3
R3317 2.2K
R3319 2.2K
MSM8976-SG
GPIO1
Boot GPIO
FINGER_SPI_MOSI BA19 GPIO_0
FINGER_SPI_MISO BB20 GPIO_1
FINGER_SPI_CS_N AW19 GPIO_2
FINGER_SPI_CLK AY20 GPIO_3
BLSP1
UTXD0 BB10 GPIO_4
URXD0 BB2 GPIO_5
BACKLIGHT_SDA BB6 GPIO_6
BACKLIGHT_SCL BB4 GPIO_7
BLSP2
Gsensor_SPI_MOSI AW11 GPIO_8
Gsensor_SPI_MISO AV12 GPIO_9
Gsensor_SPI_CS_N BA11 GPIO_10
Gsensor_SPI_CLK BA7 GPIO_11
BLSP3
LCD_ID AW35 GPIO_12
TFA9890_RST AY34 GPIO_13
TP_SDA AV34 GPIO_14
TP_SCL BB34 GPIO_15
BLSP4
AV16 GPIO_16
PDN_AK4375 BA15 GPIO_17
AUDIO_SDA AY14 GPIO_18
AUDIO_SCL BB12 GPIO_19
BLSP8
BC5 GPIO_20
BB8 GPIO_21
GUAGE_NFC_SDA AV14 GPIO_22
GUAGE_NFC_SCL AW13 GPIO_23
BLSP6
LCD_TE BA35 GPIO_24
LCD_RST_N BC35 GPIO_25
CAM0_MCLK L3301 15NH AY32 GPIO_26
VCAMA_LDO_EN BB32 GPIO_27
CAM1_MCLK L3301 25NH BA29 GPIO_28
C3316 C3312 33P 33P
CAM_SDA BB30 GPIO_29
CAM_SCL AW31 GPIO_30
VCAMA_AVDD_EN BB28 GPIO_31
FLASH_EN BA31 GPIO_32
VCAMA_DRI_AVDD_EN AY30 GPIO_33
LCD_5V_EN- AV30 GPIO_34
CAM0_PDN AW29 GPIO_35
AW25 GPIO_36
IC-MSM8976PRO
GPIO_37 BA27 FORCE_USB_BOOT
GPIO_38 BB26 CAM1_PDN
GPIO_39 F42 WCSS_BT_SSBI
GPIO_40 E39 WCSS_WLAN_DATA_2
GPIO_41 C41 WCSS_WLAN_DATA_1
GPIO_42 D40 WCSS_WLAN_DATA_0
GPIO_43 D42 WCSS_WLAN_SET
GPIO_44 B42 WCSS_WLAN_CLK
GPIO_45 AH40
GPIO_46 AG41
GPIO_47 AK40 WCSS_BT_CTRL
GPIO_48 AG39 WCSS_BT_DAT
GPIO_49 AE3 FINGER_ID0
GPIO_50 AD2 FINGER_RST_N
GPIO_51 AD6 M_SENSOR_RSTN
GPIO_52 AC5
GPIO_53 AE2 UIM2_DATA
GPIO_54 AE5 UIM2_CLK
GPIO_55 AG1 UIM2_RESET
GPIO_56 AJ3 INT_SIM2
GPIO_57 AH2 UIM1_DATA
GPIO_58 AF4 UIM1_CLK
GPIO_59 AK2 UIM1_RESET
GPIO_60 AK4 INT_SIM1
GPIO_61 AB6 UIM_BATT_ALM
GPIO_62 AP4 BL_CTL
GPIO_63 D14 GPIO_TF_EN
GPIO_64 BA33 TS_RST
GPIO_65 AW33 TS_INT_N
DMIC
GPIO_66 AL3 SW_CTL2
GPIO_67 AP2 AP_DATA
GPIO_68 R5 SW_CTRL
GPIO_69 AY2 PWR_ON_CONF_1
GPIO_70 R3 RFFE1_CLK
GPIO_71 R2 RFFE1_DATA
GPIO_72 P4 RFFE2_CLK
GPIO_73 N3 RFFE2_DATA
VREG_L5_1P8
R3301 NC
GRFC_6_PRX_RF1118_CTRL1
GPIOs BOOT_CONFIG
GPIO_87 BOOT_CONFIG[1]
GPIO_88 BOOT_CONFIG[2]
GPIO_89 BOOT_CONFIG[3]
BOOT_CONFIG[3:1] BOOT_CONFIG
000 (default) SDC2 -> USB2.0
001 SDC2 -> SDC1 -> USB2.0
010 SDC1 -> USB2.0
011 USB2.0
Value=MSM8976-SG
U2501
GPIO2
RFFE3_CLK M2 GPIO_74
RFFE3_DATA M4 GPIO_75
RFFE5_CLK T2 GPIO_76
RFFE5_DATA M6 GPIO_77
RFFE4_CLK K2 GPIO_78
RFFE4_DATA H2 GPIO_79
PRX_RF1119_en C3 GPIO_80
GRFC_14_TX_B28A_B28B D4 GPIO_81
GRFC_2_PRX_RF1119_CTRL1 B2 GPIO_82
GRFC_3_PRX_RF1119_CTRL2 B4 GPIO_83
GRFC_4_DPDT_CTL1 B6 GPIO_84
DRX_RF1119_CTRL1 C7 GPIO_85
GRFC_6_PRX_RF1118_CTRL1 C5 GPIO_86
GRFC_7_FBRX J3 GPIO_87
GRFC_6_PRX_RF1118_CTRL2 K4 GPIO_88
DRX_B1_eLNA_en J5 GPIO_89
GRFC_11_PRX_B20_B28A_B28B K6 GPIO_90
DRX_B3_eLNA_en H4 GPIO_91
DA_switch&B8_2nd_isolation G5 GPIO_92
DRX_RF1119_CTRL2 F4 GPIO_93
DRX_B28_eLNA_en G3 GPIO_94
Boot GPIO
HW_ID1 E5 GPIO_95
DRx_RF1119_en F6 GPIO_96
HW_ID3 E3 GPIO_97
GPS_EXT_LNA_EN F2 GPIO_98
GSM_TX_PHASE D2 GPIO_99
EINT_SD AV32 GPIO_100
SUB_HWID_2 AY18 GPIO_101
need double check TX or RX
I2S2_ADCDAT_SMPA E7 GPIO_102
I2S2
FINGER_ID2 AY24 GPIO_103
FINGER_ID1 AW27 GPIO_104
I2S2_BCLK_SMPA F8 GPIO_105
FINGER_IRQ BA9 GPIO_106
HALL_INT AY4 GPIO_107
BLSP7_SPI_MOSI AY16 GPIO_108
BLSP7_SPI_MISO BB16 GPIO_109
BLSP7
IC-MSM8976PRO
GPIO_110 BA17 BLSP7_SPI_CS_N
GPIO_111 AW17 BLSP7_SPI_CLK
GPIO_112 AY10
GPIO_113 AV6 KCOL0_VOL+
GPIO_114 AV4 LCD_TE
GPIO_115 BA5 KCOL1_VOL-
PLACE RC FLITER CLOSE TO MSM
GPIO_116 AN3 R3309 0R PM_PDM_CLK
GPIO_117 AM4 C3309 0R PM_PDM_SYNC
C3310 C3314 NC NC
PDM
SLIMBUS
GPIO_118 AL5 PM_PDM_TX
GPIO_119 AR3 PM_PDM_RX0
GPIO_120 AR5 PM_PDM_RX1
GPIO_121 AN5 PM_PDM_RX2
GPIO_122 AL41 LCD_OLED_ID
I2S1
GPIO_123 AJ39 I2S1_LRCK_CODEC
GPIO_124 AJ41 I2S1_BCK_CODEC
GPIO_125 AH42 I2S1_DO_CODEC
GPIO_126 AK42 I2S1_MCK_CODEC
R3320 NC
GPIO_127 AK38 SUB_HWID_1
GPIO_128 AL39 LCD_5V_EN
GPIO_129 BA25 CAM0_RESET
GPIO_130 BA23 CTP_AVDD_EN
GPIO_131 AY26 CAM1_RESET
GPIO_132 AV18 MCU_EN
GPIO_133 AW15 TP_LCD_1V8_EN
I2S2
BLSP5
GPIO_134 E9 I2S2_LRCLK_SMPA
GPIO_135 F10 I2S2_DACDAT_SMPA
need double check TX or RX
GPIO_136 D8 SENSOR_SDA
GPIO_137 B8 SENSOR_SCL
GPIO_138 C9 EINT_G_SENSOR
GPIO_139 D10 EINT1_GYRO
GPIO_140 E11
GPIO_141 B10 EINT_ALPS
GPIO_142 B12 FINGER_ID3
GPIO_143 AM2 PWR_ON_CONF_0
GPIO_144 AK6 AP_CLK
VREG_L22_1P8
R3303 R3304 2.2K 2.2K
CAM_SDA
CAM_SCL
VREG_L5_1P8
EXT BUCK, SMB
R3305 R3306 2.2K 2.2K
GUAGE_NFC_SDA
GUAGE_NFC_SCL
VREG_L6_1P8
TOUCHSCREEN
R3307 R3308 2.2K 2.2K
TP_SDA
TP_SCL
VREG_L6_1P8
sensor
R3310 R3311 2.2K 2.2K
SENSOR_SDA
SENSOR_SCL
VREG_L5_1P8
Audio
R3312 R3313 2.2K 2.2K
AUDIO_SDA
AUDIO_SCL
VREG_L6_1P8
TOUCHSCREEN
R3321 R3322 2.2K 2.2K
BACKLIGHT_SDA
BACKLIGHT_SCL
1
2
3
4
5
6
7
8
A
B
C
D
E
F

Note: Asterisks (*) indicate modem power management (MPM) wake-up pins

CAM_I2C_SDA0

I2Cﾉｸ IIC2	ｶﾁｵﾘﾖｷ	ﾐｴｵﾘﾖｷ
MAIN CAMERA	0x35	
Sub Camera	0x21	
Flash Driver	0xC7	0xC6

I2Cﾉｸ	ｶﾁｵﾘﾖｷ	ﾐｴｵﾘﾖｷ
ﾉﾁｳ･ﾆｬｷU	0x6D	
ｵ ｿｼﾆ	0xAB	
FAN53526	0xC1	

TP_I2C_SDA

I2Cﾉｸ(I2C0 MT6755ﾐUｺﾅ)	ｶﾁｵﾘﾖｷ	ﾐｴｵﾘﾖｷ
TP	0x41	
TPS65132	0x7D	

I2Cﾉｸ	ｶﾁｵﾘﾖｷ	ﾐｴｵﾘﾖｷ
LSM6DS3	0xD5	
ALS+PS	0XA7	
M-sensor	0x19	

I2Cﾉｸ	ｶﾁｵﾘﾖｷ	ﾐｴｵﾘﾖｷ
Smart PA	0x6D	
AK4376	0x21	

I2Cﾉｸ	ｶﾁｵﾘﾖｷ	ﾐｴｵﾘﾖｷ
LM3697	0x41	0x40
KTD2026	0x61	0x60

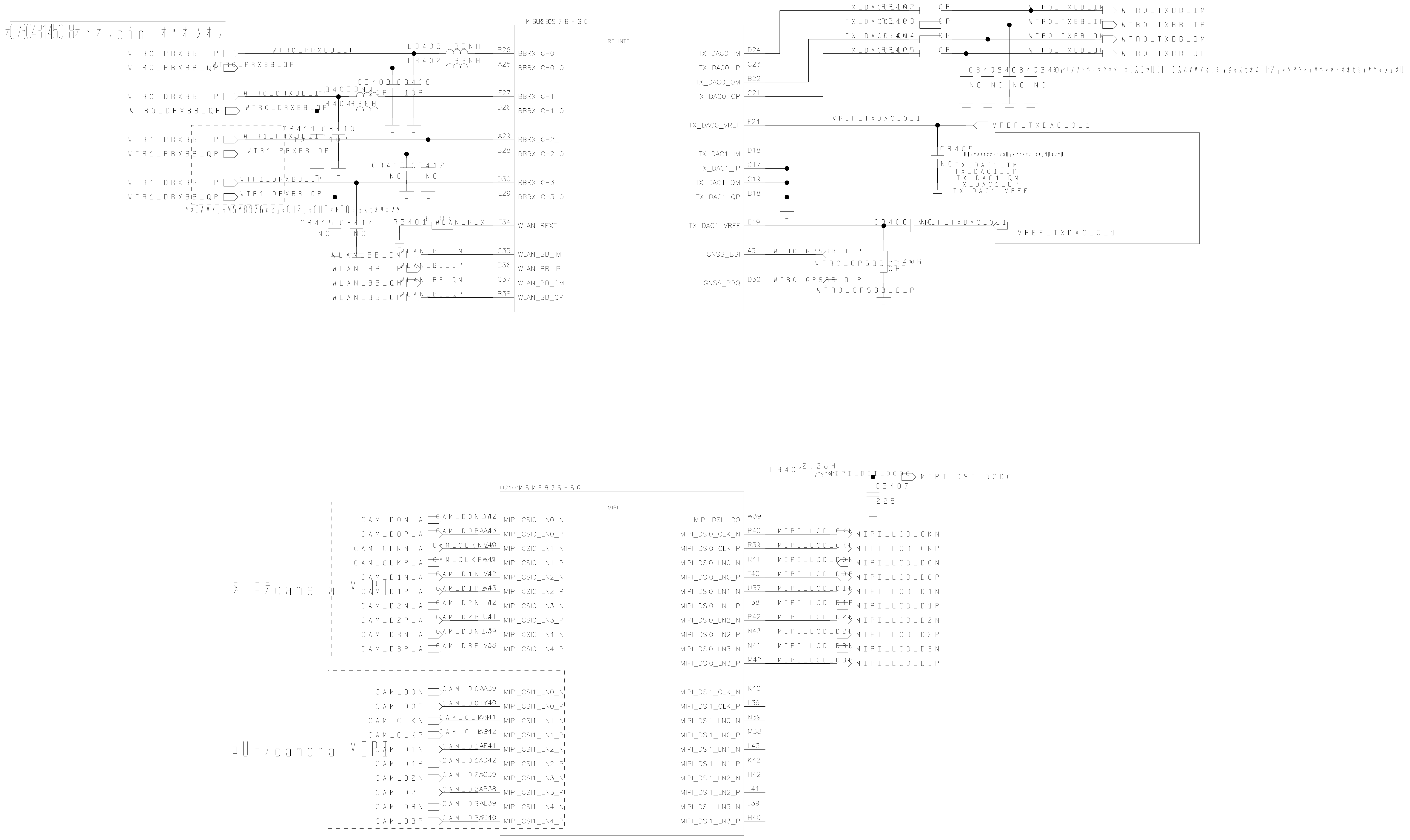
MSM8976-SG
RF_INTF
WTR0_PRXBB_IP
WTR0_PRXBB_QP
WTR0_DRXBB_IP
WTR0_DRXBB_QP
WTR1_PRXBB_IP
WTR1_PRXBB_QP
WTR1_DRXBB_IP
WTR1_DRXBB_QP
L3409 33NH
L3402 33NH
L3403 3NH
L3404 33NH
C3409 C3408 10P
C3411 C3410 10P
C3413 C3412 NC
C3415 C3414 NC
R3401 5.6K WLAN_REXT
B26 BBRX_CH0_I
A25 BBRX_CH0_Q
E27 BBRX_CH1_I
D26 BBRX_CH1_Q
A29 BBRX_CH2_I
B28 BBRX_CH2_Q
D30 BBRX_CH3_I
E29 BBRX_CH3_Q
F34 WLAN_REXT
C35 WLAN_BB_IM
B36 WLAN_BB_IP
C37 WLAN_BB_QM
B38 WLAN_BB_QP
WLAN_BB_IM
WLAN_BB_IP
WLAN_BB_QM
WLAN_BB_QP
D24 TX_DAC0_IM
C23 TX_DAC0_IP
B22 TX_DAC0_QM
C21 TX_DAC0_QP
F24 TX_DAC0_VREF
D18 TX_DAC1_IM
C17 TX_DAC1_IP
C19 TX_DAC1_QM
B18 TX_DAC1_QP
E19 TX_DAC1_VREF
A31 GNSS_BBI
D32 GNSS_BBQ
R3402 0R
R3403 0R
R3404 0R
R3405 0R
WTR0_TXBB_IM
WTR0_TXBB_IP
WTR0_TXBB_QM
WTR0_TXBB_QP
C3403 C3402 C3401 C3400 NC
VREF_TXDAC_0_1
C3405 NC
C3406
TX_DAC1_IM
TX_DAC1_IP
TX_DAC1_QM
TX_DAC1_QP
TX_DAC1_VREF
WTR0_GPSBB_I_P
WTR0_GPSBB_Q_P
R3406 0R
U2101 MSM8976-SG
MIPI
L3401 2.2uH
MIPI_DSI_DCDC
C3407 225
W39 MIPI_DSI_LDO
camera MIPI
CAM_D0N_A Y42 MIPI_CSI0_LN0_N
CAM_D0P_A AA43 MIPI_CSI0_LN0_P
CAM_CLKN_A V40 MIPI_CSI0_LN1_N
CAM_CLKP_A W41 MIPI_CSI0_LN1_P
CAM_D1N_A V42 MIPI_CSI0_LN2_N
CAM_D1P_A W43 MIPI_CSI0_LN2_P
CAM_D2N_A T42 MIPI_CSI0_LN3_N
CAM_D2P_A U41 MIPI_CSI0_LN3_P
CAM_D3N_A U39 MIPI_CSI0_LN4_N
CAM_D3P_A V38 MIPI_CSI0_LN4_P
CAM_D0N AA39 MIPI_CSI1_LN0_N
CAM_D0P Y40 MIPI_CSI1_LN0_P
CAM_CLKN AA41 MIPI_CSI1_LN1_N
CAM_CLKP AB42 MIPI_CSI1_LN1_P
CAM_D1N AE41 MIPI_CSI1_LN2_N
CAM_D1P AD42 MIPI_CSI1_LN2_P
CAM_D2N AC39 MIPI_CSI1_LN3_N
CAM_D2P AB38 MIPI_CSI1_LN3_P
CAM_D3N AE39 MIPI_CSI1_LN4_N
CAM_D3P AD40 MIPI_CSI1_LN4_P
P40 MIPI_DSI0_CLK_N MIPI_LCD_CKN
R39 MIPI_DSI0_CLK_P MIPI_LCD_CKP
R41 MIPI_DSI0_LN0_N MIPI_LCD_D0N
T40 MIPI_DSI0_LN0_P MIPI_LCD_D0P
U37 MIPI_DSI0_LN1_N MIPI_LCD_D1N
T38 MIPI_DSI0_LN1_P MIPI_LCD_D1P
P42 MIPI_DSI0_LN2_N MIPI_LCD_D2N
N43 MIPI_DSI0_LN2_P MIPI_LCD_D2P
N41 MIPI_DSI0_LN3_N MIPI_LCD_D3N
M42 MIPI_DSI0_LN3_P MIPI_LCD_D3P
K40 MIPI_DSI1_CLK_N
L39 MIPI_DSI1_CLK_P
N39 MIPI_DSI1_LN0_N
M38 MIPI_DSI1_LN0_P
L43 MIPI_DSI1_LN1_N
K42 MIPI_DSI1_LN1_P
H42 MIPI_DSI1_LN2_N
J41 MIPI_DSI1_LN2_P
J39 MIPI_DSI1_LN3_N
H40 MIPI_DSI1_LN3_P

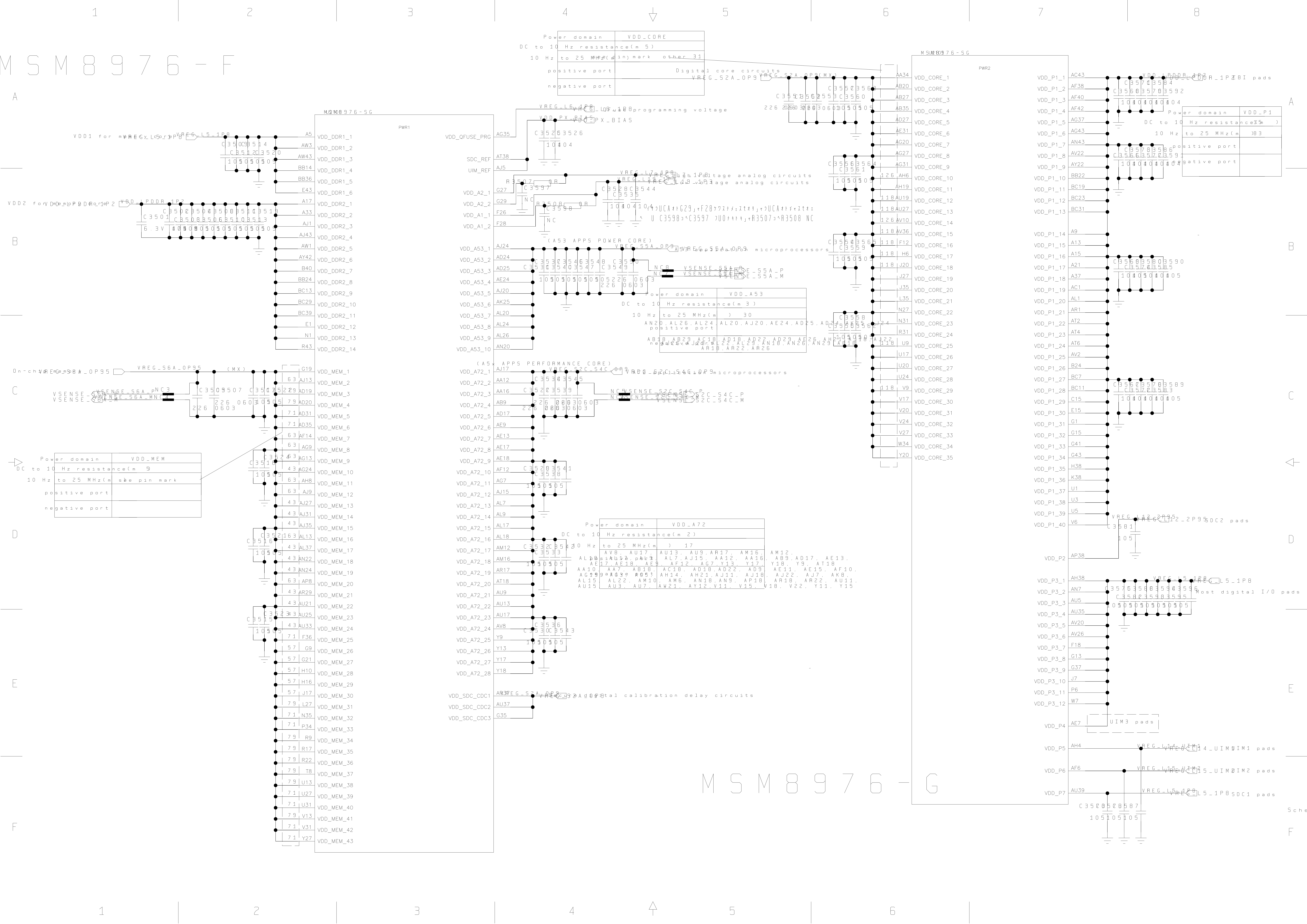
MSM8976-F
MSM8976-G
MSM8976-SG
PWR1
PWR2
Power domain | VDD_CORE
DC to 10 Hz resistance(mΩ) 5
10 Hz to 25 MHz(mΩ) pin mark other 31
positive port
negative port
Digital core circuits
VREG_S2A_0P9(MX)
VDD1 for memory LPDDR
VREG_L5_1P8
VDD2 for memory LPDDR
VREG_LPDDR_1P2
On-chip memories
VREG_S6A_0P95
VSENSE_S6A_P
VSENSE_S6A_M
Power domain | VDD_MEM
DC to 10 Hz resistance(mΩ) 9
10 Hz to 25 MHz(mΩ) see pin mark
VREG_L6_1P8
QFUSE programming voltage
VDD_PX_BIAS
VREG_L7_1P8
Low voltage analog circuits
VREG_L3_1P3
(A53 APPS POWER CORE)
VREG_S5A_0P9
A53 application microprocessors
VSENSE_S5A_P
VSENSE_S5A_M
Power domain | VDD_A53
DC to 10 Hz resistance(mΩ) 3
10 Hz to 25 MHz(mΩ) 30
(A5x APPS PERFORMANCE CORE)
VREG_S2C_S4C_0P9
A72 application microprocessors
VSENSE_S2C_S4C_P
VSENSE_S2C_S4C_M
Power domain | VDD_A72
DC to 10 Hz resistance(mΩ) 2
10 Hz to 25 MHz(mΩ) 17
Digital calibration delay circuits
VREG_LPDDR_1P2
EBI pads
Power domain | VDD_P1
DC to 10 Hz resistance(mΩ) 15
10 Hz to 25 MHz(mΩ) 83
VREG_L12_2P95
SDC2 pads
Most digital I/O pads
UIM3 pads
VREG_L14_UIM1
UIM1 pads
VREG_L15_UIM2
UIM2 pads
SDC1 pads
VDD_DDR1_1 … VDD_DDR1_6
VDD_DDR2_1 … VDD_DDR2_14
VDD_MEM_1 … VDD_MEM_43
VDD_QFUSE_PRG
SDC_REF
UIM_REF
VDD_A2_1
VDD_A2_2
VDD_A1_1
VDD_A1_2
VDD_A53_1 … VDD_A53_10
VDD_A72_1 … VDD_A72_28
VDD_SDC_CDC1
VDD_SDC_CDC2
VDD_SDC_CDC3
VDD_CORE_1 … VDD_CORE_35
VDD_P1_1 … VDD_P1_40
VDD_P2
VDD_P3_1 … VDD_P3_12
VDD_P4
VDD_P5
VDD_P6
VDD_P7
1 2 3 4 5 6 7 8
A B C D E F
Sche

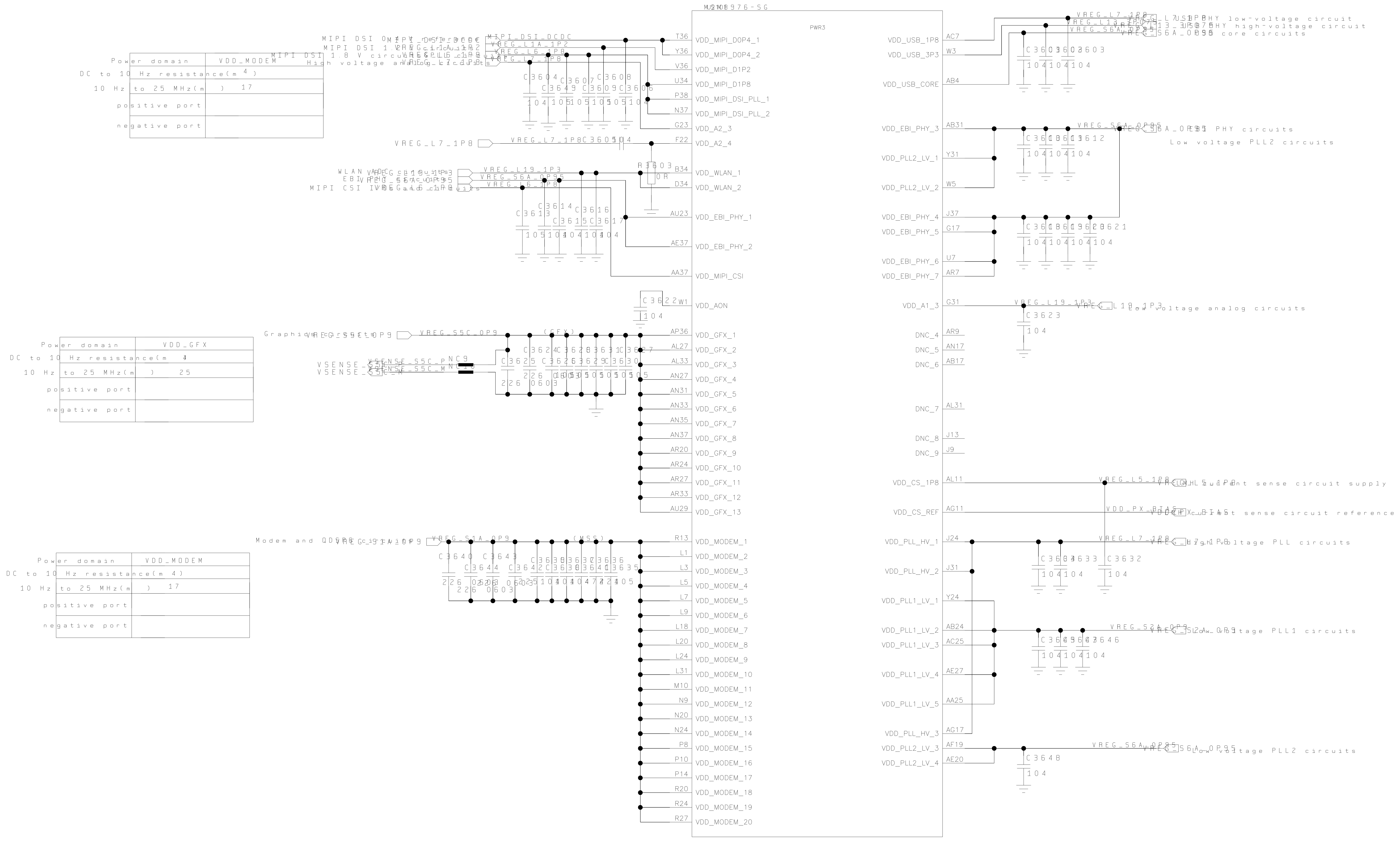
MSM8976-SG
PWR3
MIPI DSI 0.4 V reference
MIPI DSI 1.2 V circuits
MIPI DSI 1.8 V circuits & PLL circuits
High voltage analog circuits
MIPI_DSI_DCDC
VREG_L1A_1P2
VREG_L6_1P8
VREG_L7_1P8
C3604 104
C3649 105
C3607 105
C3609 105
C3608 105
C3606 104
C3605 104
R3603 0R
WLAN ADC circuits
EBI PHY circuits
MIPI CSI I/O and circuits
VREG_L19_1P3
VREG_S6A_0P95
C3613 105
C3614 104
C3615 104
C3616 104
C3617 104
C3622 104
Graphics circuits
VREG_S5C_0P9
(GFX)
VSENSE_S5C_P
VSENSE_S5C_M
NC9
NC10
C3625 226
C3624 226 0603
C3626 105
C3628 105
C3629 105
C3631 105
C3630 105
C3627 105
Modem and QDSP6 circuits
VREG_S1A_0P9
(MSS)
C3640 226
C3644 226 0603
C3643 226 0603
C3642 225
C3639 104
C3638 104
C3637 104
C3641 474
C3636 224
C3635 105
T36 VDD_MIPI_DOP4_1
Y36 VDD_MIPI_DOP4_2
V36 VDD_MIPI_D1P2
U34 VDD_MIPI_D1P8
P38 VDD_MIPI_DSI_PLL_1
N37 VDD_MIPI_DSI_PLL_2
G23 VDD_A2_3
F22 VDD_A2_4
B34 VDD_WLAN_1
D34 VDD_WLAN_2
AU23 VDD_EBI_PHY_1
AE37 VDD_EBI_PHY_2
AA37 VDD_MIPI_CSI
W1 VDD_AON
AP36 VDD_GFX_1
AL27 VDD_GFX_2
AL33 VDD_GFX_3
AN27 VDD_GFX_4
AN31 VDD_GFX_5
AN33 VDD_GFX_6
AN35 VDD_GFX_7
AN37 VDD_GFX_8
AR20 VDD_GFX_9
AR24 VDD_GFX_10
AR27 VDD_GFX_11
AR33 VDD_GFX_12
AU29 VDD_GFX_13
R13 VDD_MODEM_1
L1 VDD_MODEM_2
L3 VDD_MODEM_3
L5 VDD_MODEM_4
L7 VDD_MODEM_5
L9 VDD_MODEM_6
L18 VDD_MODEM_7
L20 VDD_MODEM_8
L24 VDD_MODEM_9
L31 VDD_MODEM_10
M10 VDD_MODEM_11
N9 VDD_MODEM_12
N20 VDD_MODEM_13
N24 VDD_MODEM_14
P8 VDD_MODEM_15
P10 VDD_MODEM_16
P14 VDD_MODEM_17
R20 VDD_MODEM_18
R24 VDD_MODEM_19
R27 VDD_MODEM_20
VDD_USB_1P8 AC7
VDD_USB_3P3 W3
VDD_USB_CORE AB4
VDD_EBI_PHY_3 AB31
VDD_PLL2_LV_1 Y31
VDD_PLL2_LV_2 W5
VDD_EBI_PHY_4 J37
VDD_EBI_PHY_5 G17
VDD_EBI_PHY_6 U7
VDD_EBI_PHY_7 AR7
VDD_A1_3 G31
DNC_4 AR9
DNC_5 AN17
DNC_6 AB17
DNC_7 AL31
DNC_8 J13
DNC_9 J9
VDD_CS_1P8 AL11
VDD_CS_REF AG11
VDD_PLL_HV_1 J24
VDD_PLL_HV_2 J31
VDD_PLL1_LV_1 Y24
VDD_PLL1_LV_2 AB24
VDD_PLL1_LV_3 AC25
VDD_PLL1_LV_4 AE27
VDD_PLL1_LV_5 AA25
VDD_PLL_HV_3 AG17
VDD_PLL2_LV_3 AF19
VDD_PLL2_LV_4 AE20
VREG_L7_1P8
VREG_L13_3P075
VREG_S6A_0P95
USB PHY low-voltage circuit
USB PHY high-voltage circuit
USB core circuits
C3601 104
C3602 104
C3603 104
EBI PHY circuits
Low voltage PLL2 circuits
C3610 104
C3611 104
C3612 104
C3618 104
C3619 104
C3620 104
C3621 104
VREG_L19_1P3
Low voltage analog circuits
C3623 104
VREG_L5_1P8
Current sense circuit supply
VDD_PX_BIAS
Current sense circuit reference
High voltage PLL circuits
C3634 104
C3633 104
C3632 104
VREG_S2A_0P9
Low voltage PLL1 circuits
C3645 104
C3647 104
C3646 104
Low voltage PLL2 circuits
C3648 104

Power domain	VDD_MODEM
DC to 10 Hz resistance(m)	4
10 Hz to 25 MHz(m)	17
positive port	
negative port	

Power domain	VDD_GFX
DC to 10 Hz resistance(m)	4
10 Hz to 25 MHz(m)	25
positive port	
negative port	

Power domain	VDD_MODEM
DC to 10 Hz resistance(m 4)	
10 Hz to 25 MHz(m)	17
positive port	
negative port	

MSM8976-H

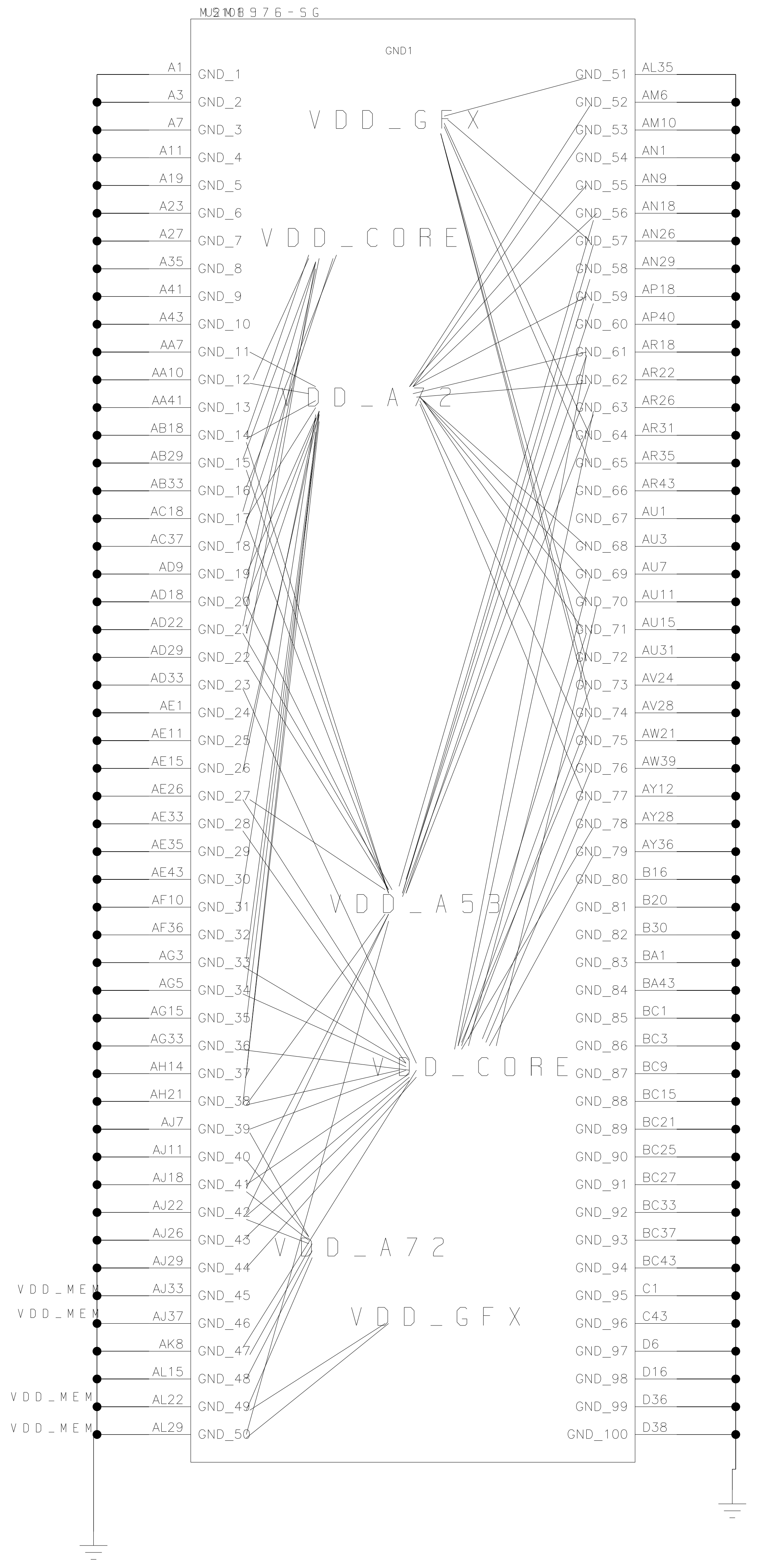
MSM8976-SG
GND1
A1 GND_1
A3 GND_2
A7 GND_3
A11 GND_4
A19 GND_5
A23 GND_6
A27 GND_7
A35 GND_8
A41 GND_9
A43 GND_10
AA7 GND_11
AA10 GND_12
AA41 GND_13
AB18 GND_14
AB29 GND_15
AB33 GND_16
AC18 GND_17
AC37 GND_18
AD9 GND_19
AD18 GND_20
AD22 GND_21
AD29 GND_22
AD33 GND_23
AE1 GND_24
AE11 GND_25
AE15 GND_26
AE26 GND_27
AE33 GND_28
AE35 GND_29
AE43 GND_30
AF10 GND_31
AF36 GND_32
AG3 GND_33
AG5 GND_34
AG15 GND_35
AG33 GND_36
AH14 GND_37
AH21 GND_38
AJ7 GND_39
AJ11 GND_40
AJ18 GND_41
AJ22 GND_42
AJ26 GND_43
AJ29 GND_44
VDD_MEM
AJ33 GND_45
VDD_MEM
AJ37 GND_46
AK8 GND_47
AL15 GND_48
VDD_MEM
AL22 GND_49
VDD_MEM
AL29 GND_50
GND_51 AL35
GND_52 AM6
GND_53 AM10
GND_54 AN1
GND_55 AN9
GND_56 AN18
GND_57 AN26
GND_58 AN29
GND_59 AP18
GND_60 AP40
GND_61 AR18
GND_62 AR22
GND_63 AR26
GND_64 AR31
GND_65 AR35
GND_66 AR43
GND_67 AU1
GND_68 AU3
GND_69 AU7
GND_70 AU11
GND_71 AU15
GND_72 AU31
GND_73 AV24
GND_74 AV28
GND_75 AW21
GND_76 AW39
GND_77 AY12
GND_78 AY28
GND_79 AY36
GND_80 B16
GND_81 B20
GND_82 B30
GND_83 BA1
GND_84 BA43
GND_85 BC1
GND_86 BC3
GND_87 BC9
GND_88 BC15
GND_89 BC21
GND_90 BC25
GND_91 BC27
GND_92 BC33
GND_93 BC37
GND_94 BC43
GND_95 C1
GND_96 C43
GND_97 D6
GND_98 D16
GND_99 D36
GND_100 D38
VDD_GFX
VDD_CORE
VDD_A72
VDD_A53
VDD_CORE
VDD_A72
VDD_GFX

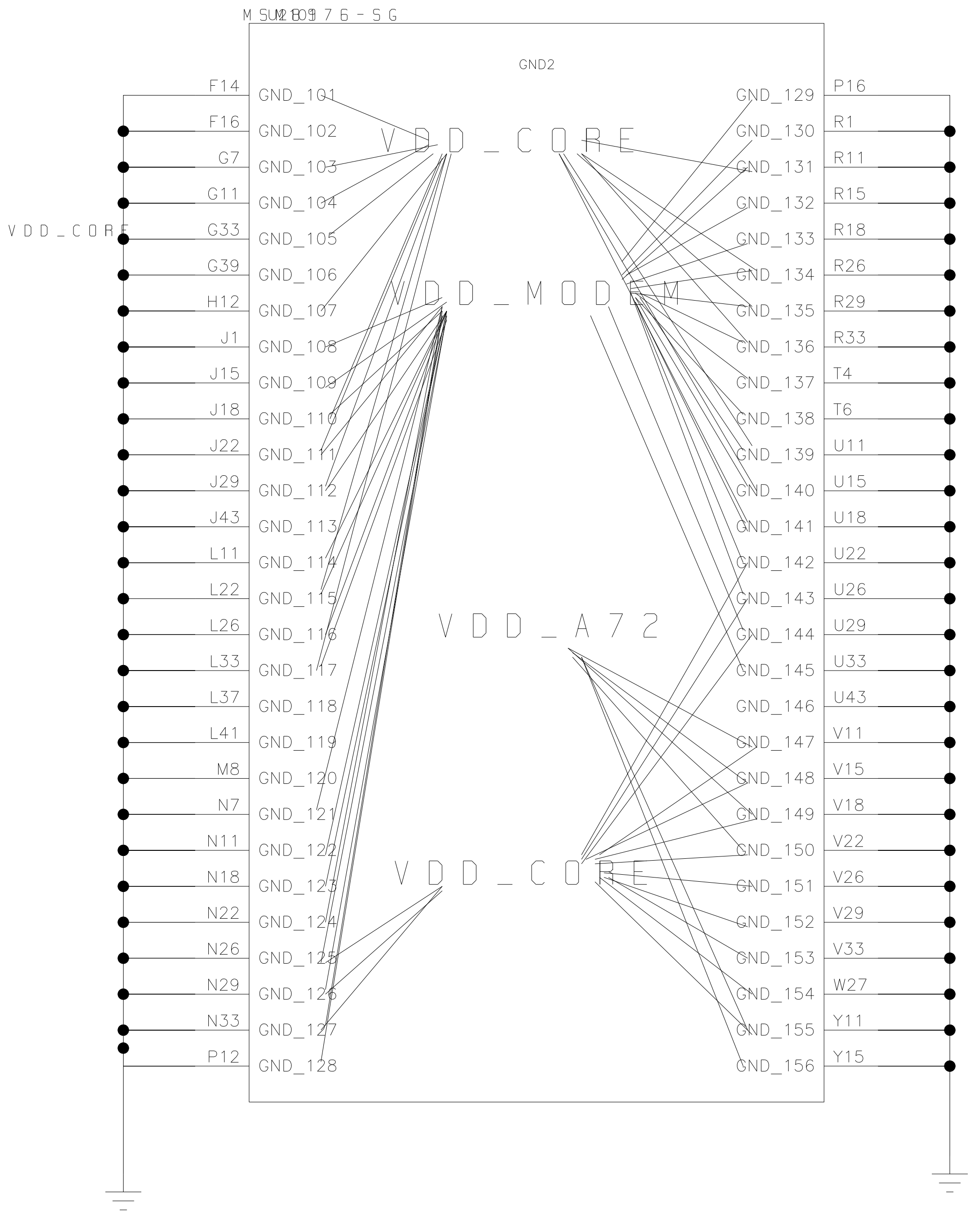
MSM8976-SG
GND2
F14 GND_101
F16 GND_102
G7 GND_103
G11 GND_104
VDD_CORE
G33 GND_105
G39 GND_106
H12 GND_107
J1 GND_108
J15 GND_109
J18 GND_110
J22 GND_111
J29 GND_112
J43 GND_113
L11 GND_114
L22 GND_115
L26 GND_116
L33 GND_117
L37 GND_118
L41 GND_119
M8 GND_120
N7 GND_121
N11 GND_122
N18 GND_123
N22 GND_124
N26 GND_125
N29 GND_126
N33 GND_127
P12 GND_128
GND_129 P16
GND_130 R1
GND_131 R11
GND_132 R15
GND_133 R18
GND_134 R26
GND_135 R29
GND_136 R33
GND_137 T4
GND_138 T6
GND_139 U11
GND_140 U15
GND_141 U18
GND_142 U22
GND_143 U26
GND_144 U29
GND_145 U33
GND_146 U43
GND_147 V11
GND_148 V15
GND_149 V18
GND_150 V22
GND_151 V26
GND_152 V29
GND_153 V33
GND_154 W27
GND_155 Y11
GND_156 Y15
VDD_CORE
VDD_MODEM
VDD_A72
VDD_CORE

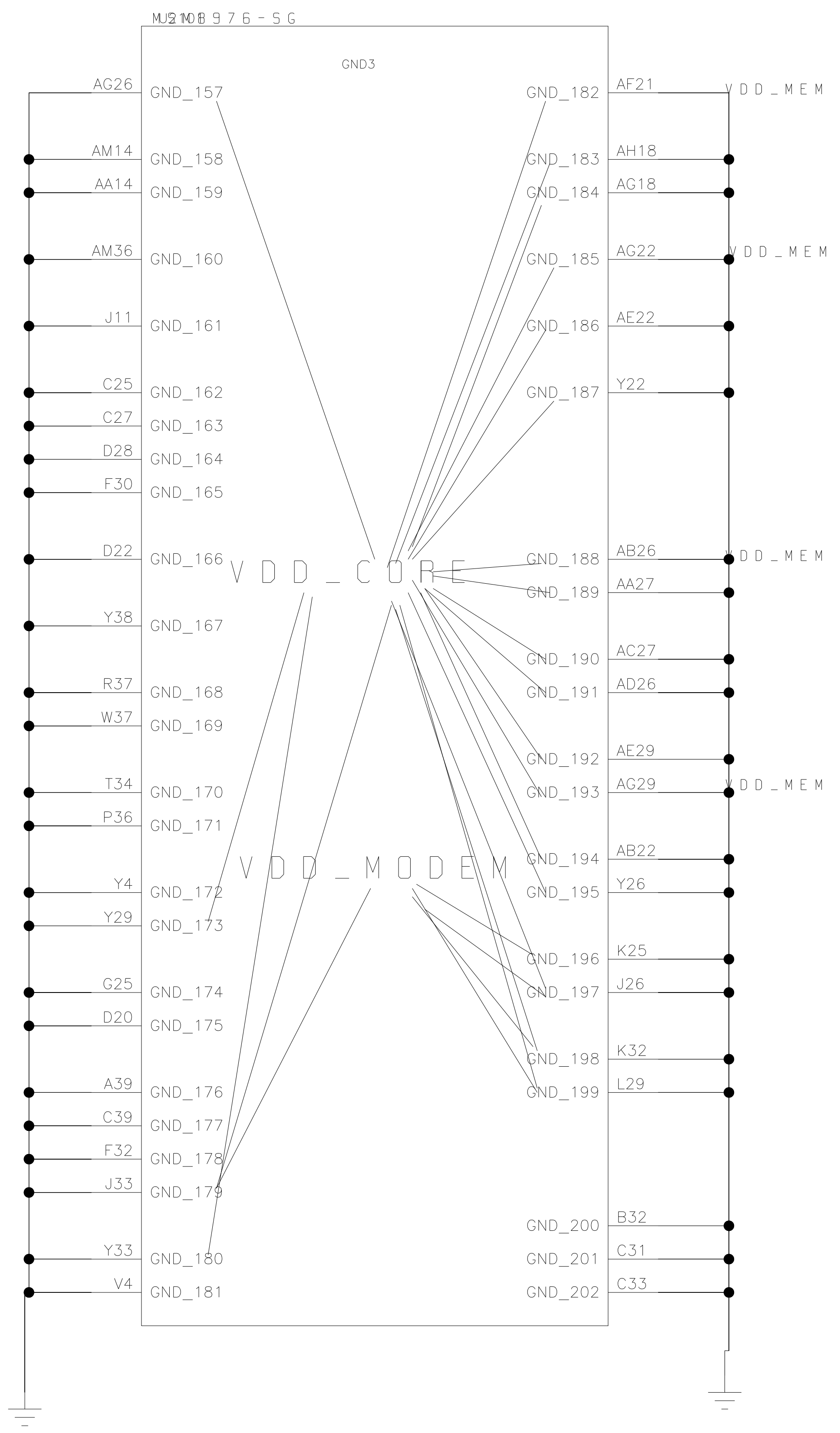
MSM8976-SG
GND3
AG26 GND_157
AM14 GND_158
AA14 GND_159
AM36 GND_160
J11 GND_161
C25 GND_162
C27 GND_163
D28 GND_164
F30 GND_165
D22 GND_166
Y38 GND_167
R37 GND_168
W37 GND_169
T34 GND_170
P36 GND_171
Y4 GND_172
Y29 GND_173
G25 GND_174
D20 GND_175
A39 GND_176
C39 GND_177
F32 GND_178
J33 GND_179
Y33 GND_180
V4 GND_181
GND_182 AF21 VDD_MEM
GND_183 AH18
GND_184 AG18
GND_185 AG22 VDD_MEM
GND_186 AE22
GND_187 Y22
GND_188 AB26 VDD_MEM
GND_189 AA27
GND_190 AC27
GND_191 AD26
GND_192 AE29
GND_193 AG29 VDD_MEM
GND_194 AB22
GND_195 Y26
GND_196 K25
GND_197 J26
GND_198 K32
GND_199 L29
GND_200 B32
GND_201 C31
GND_202 C33
VDD_CORE
VDD_MODEM

PMI8952-A

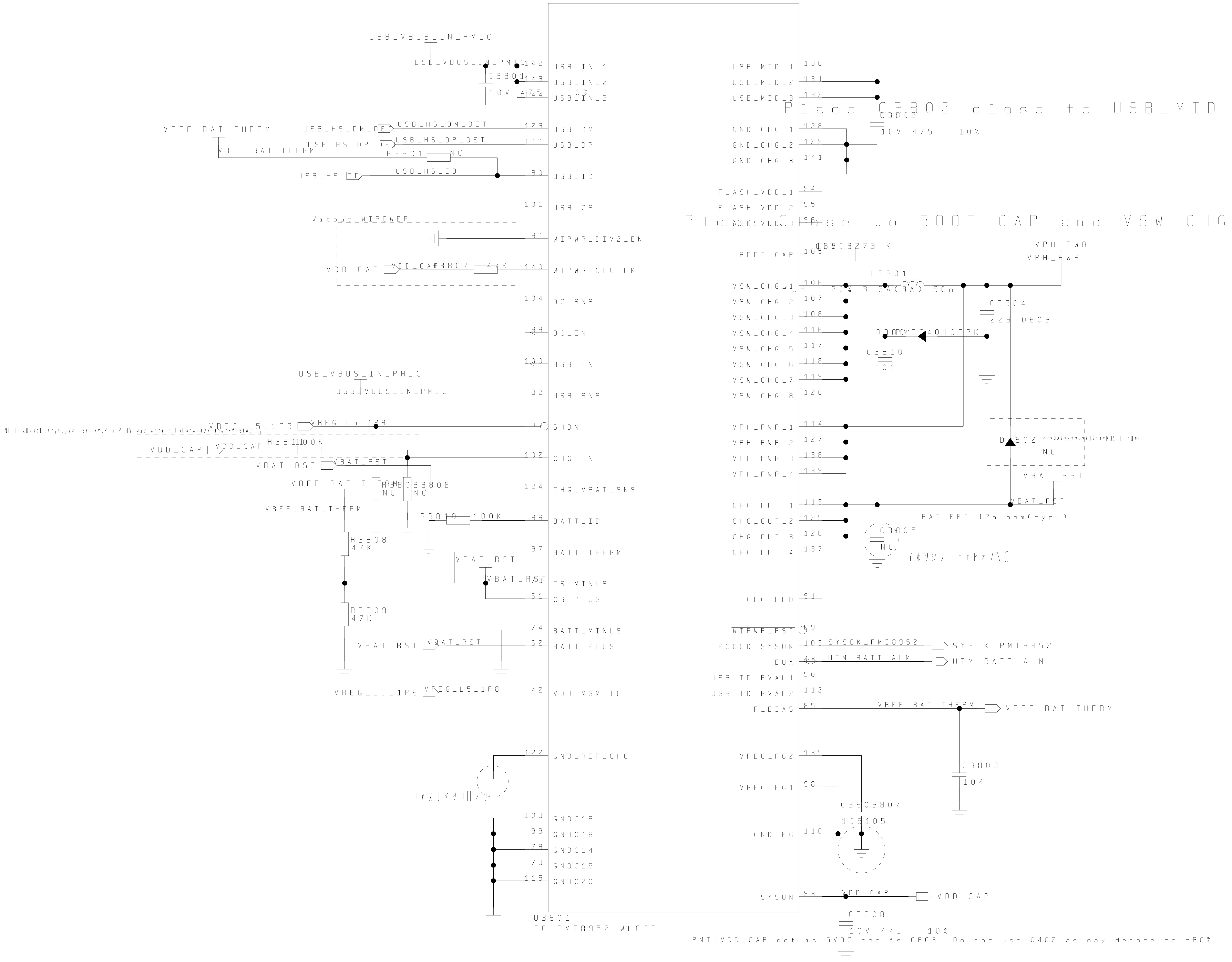
USB_VBUS_IN_PMIC
C3801
10V 475 10%
USB_IN_1
USB_IN_2
USB_IN_3
VREF_BAT_THERM
USB_HS_DM_DET
USB_HS_DP_DET
R3801 NC
USB_HS_ID
USB_DM
USB_DP
USB_ID
USB_CS
Witout WIPOWER
WIPWR_DIV2_EN
VDD_CAP
R3807 47K
WIPWR_CHG_OK
DC_SNS
DC_EN
USB_EN
USB_SNS
VREG_L5_1P8
SHDN
R3811 100K
CHG_EN
VBAT_RST
R3805 NC
R3806 NC
CHG_VBAT_SNS
R3810 100K
BATT_ID
R3808 47K
BATT_THERM
CS_MINUS
CS_PLUS
R3809 47K
BATT_MINUS
BATT_PLUS
VDD_MSM_IO
GND_REF_CHG
GNDC19
GNDC18
GNDC14
GNDC15
GNDC20
U3801
IC-PMI8952-WLCSP
USB_MID_1
USB_MID_2
USB_MID_3
Place C3802 close to USB_MID
C3802
10V 475 10%
GND_CHG_1
GND_CHG_2
GND_CHG_3
FLASH_VDD_1
FLASH_VDD_2
FLASH_VDD_3
Place Close to BOOT_CAP and VSW_CHG
C3803 273 K
BOOT_CAP
L3801
1UH 20% 3.6A(3A) 60m
VPH_PWR
VSW_CHG_1
VSW_CHG_2
VSW_CHG_3
VSW_CHG_4
VSW_CHG_5
VSW_CHG_6
VSW_CHG_7
VSW_CHG_8
C3804
226 0603
D3801 PDM1E C4010EPK
C3810
101
VPH_PWR_1
VPH_PWR_2
VPH_PWR_3
VPH_PWR_4
D3802
NC
CHG_OUT_1
CHG_OUT_2
CHG_OUT_3
CHG_OUT_4
BAT FET:12m ohm(typ.)
C3805
NC
CHG_LED
WIPWR_RST
PGOOD_SYSOK
SYSOK_PMI8952
BUA
UIM_BATT_ALM
USB_ID_RVAL1
USB_ID_RVAL2
R_BIAS
C3809
104
VREG_FG2
VREG_FG1
C3806 C3807
105 105
GND_FG
SYSON
C3808
10V 475 10%
PMI_VDD_CAP net is 5VDC.cap is 0603. Do not use 0402 as may derate to ~80%

PMI8952-B

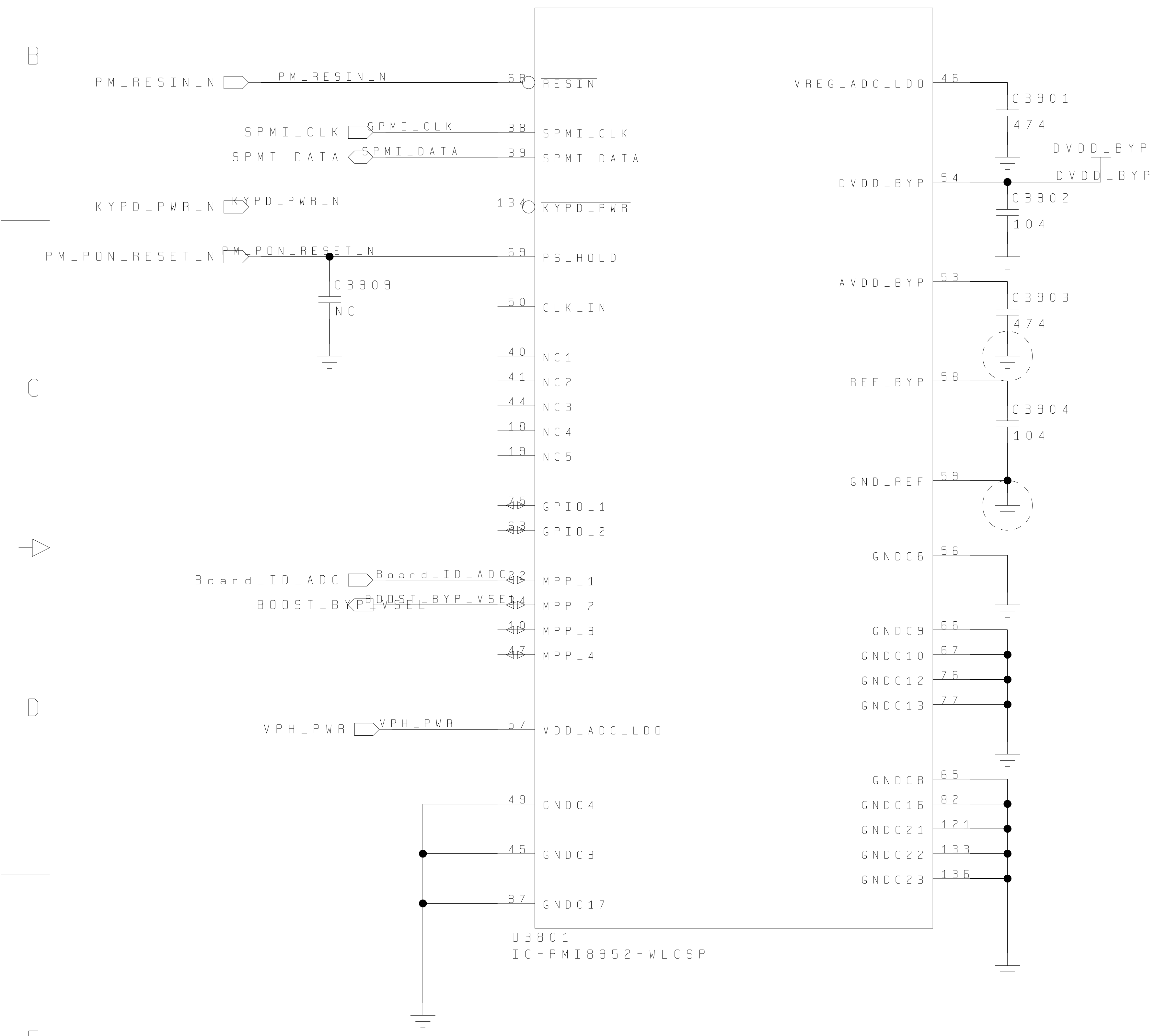
PM_RESIN_N
PM_RESIN_N
68
RESIN
SPMI_CLK
SPMI_CLK
38
SPMI_CLK
SPMI_DATA
SPMI_DATA
39
SPMI_DATA
KYPD_PWR_N
KYPD_PWR_N
134
KYPD_PWR
PM_PON_RESET_N
PM_PON_RESET_N
69
PS_HOLD
C3909
NC
50
CLK_IN
40
NC1
41
NC2
44
NC3
18
NC4
19
NC5
75
GPIO_1
63
GPIO_2
Board_ID_ADC
Board_ID_ADC
22
MPP_1
BOOST_BYP_VSEL
BOOST_BYP_VSEL
34
MPP_2
10
MPP_3
47
MPP_4
VPH_PWR
VPH_PWR
57
VDD_ADC_LDO
49
GNDC4
45
GNDC3
87
GNDC17
VREG_ADC_LDO
46
C3901
474
DVDD_BYP
DVDD_BYP
DVDD_BYP
54
C3902
104
AVDD_BYP
53
C3903
474
REF_BYP
58
C3904
104
GND_REF
59
GNDC6
56
GNDC9
66
GNDC10
67
GNDC12
76
GNDC13
77
GNDC8
65
GNDC16
82
GNDC21
121
GNDC22
133
GNDC23
136
U3801
IC-PMI8952-WLCSP

PMI8952-C

トレイソシッウノLCD/AMOLED DCDCオトイホソシオソ
LCD-472」ャAMOLED-151」ャイサモテハヌキUソノNC

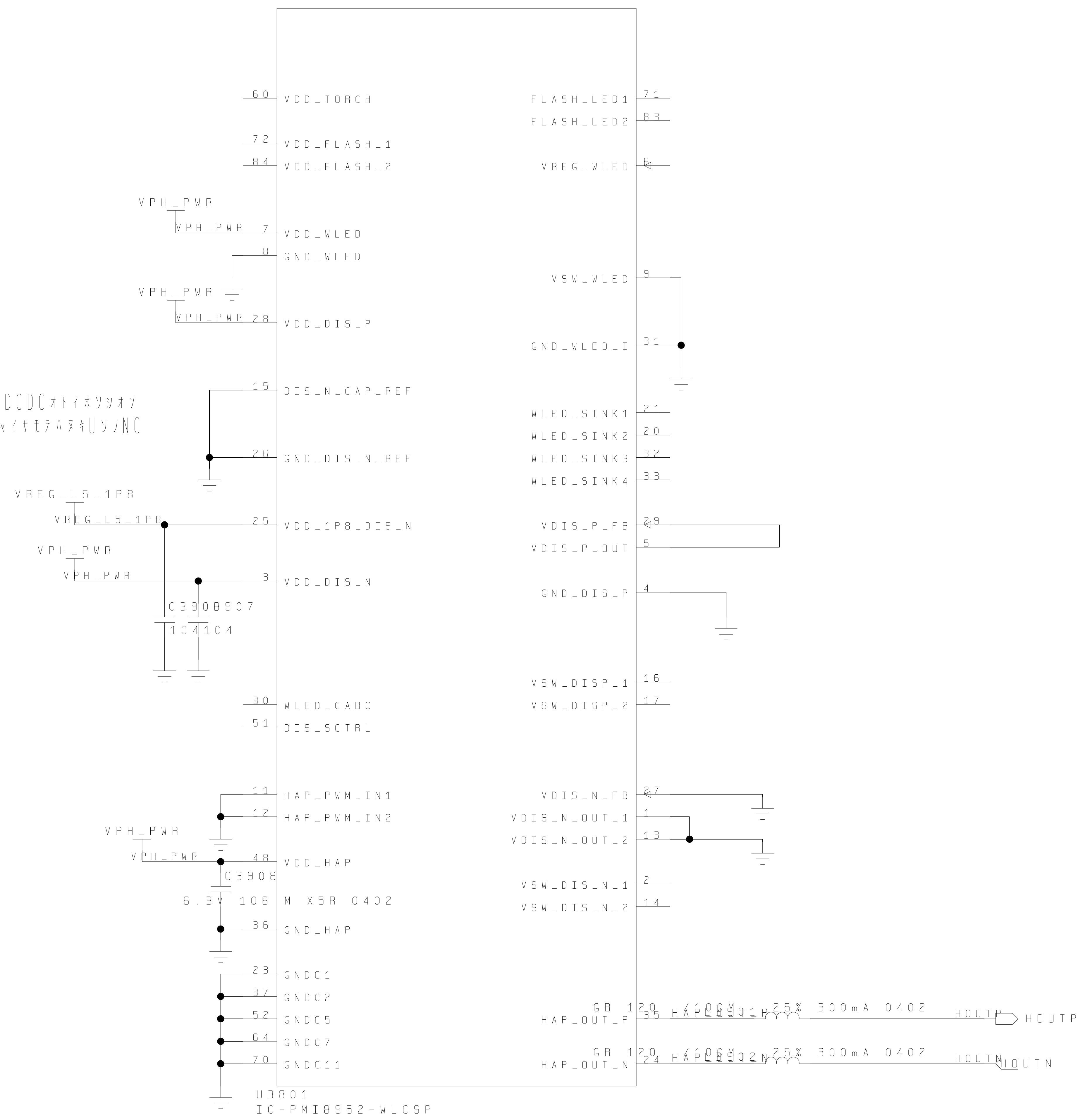
60
VDD_TORCH
72
VDD_FLASH_1
84
VDD_FLASH_2
VPH_PWR
VPH_PWR
7
VDD_WLED
8
GND_WLED
VPH_PWR
VPH_PWR
28
VDD_DIS_P
15
DIS_N_CAP_REF
26
GND_DIS_N_REF
VREG_L5_1P8
VREG_L5_1P8
25
VDD_1P8_DIS_N
VPH_PWR
VPH_PWR
3
VDD_DIS_N
C3906
C3907
104
104
30
WLED_CABC
51
DIS_SCTRL
11
HAP_PWM_IN1
12
HAP_PWM_IN2
VPH_PWR
VPH_PWR
48
VDD_HAP
C3908
6.3V 106 M X5R 0402
36
GND_HAP
23
GNDC1
37
GNDC2
52
GNDC5
64
GNDC7
70
GNDC11
U3801
IC-PMI8952-WLCSP
FLASH_LED1
71
FLASH_LED2
83
VREG_WLED
6
VSW_WLED
9
GND_WLED_I
31
WLED_SINK1
21
WLED_SINK2
20
WLED_SINK3
32
WLED_SINK4
33
VDIS_P_FB
29
VDIS_P_OUT
5
GND_DIS_P
4
VSW_DISP_1
16
VSW_DISP_2
17
VDIS_N_FB
27
VDIS_N_OUT_1
1
VDIS_N_OUT_2
13
VSW_DIS_N_1
2
VSW_DIS_N_2
14
GB 120 /100M 25% 300mA 0402
HAP_OUT_P
35
HAP_L3901_P
HOUTP
HOUTP
GB 120 /100M 25% 300mA 0402
HAP_OUT_N
24
HAP_L3902_N
HOUTN
HOUTN

ィノモテトレヨテモイシUクェホサーヤ、チU」ィrefer to 14049」ゥ

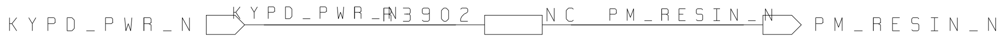
KYPD_PWR_N
KYPD_PWR_N
R3902
NC
PM_RESIN_N
PM_RESIN_N

PM8956-B

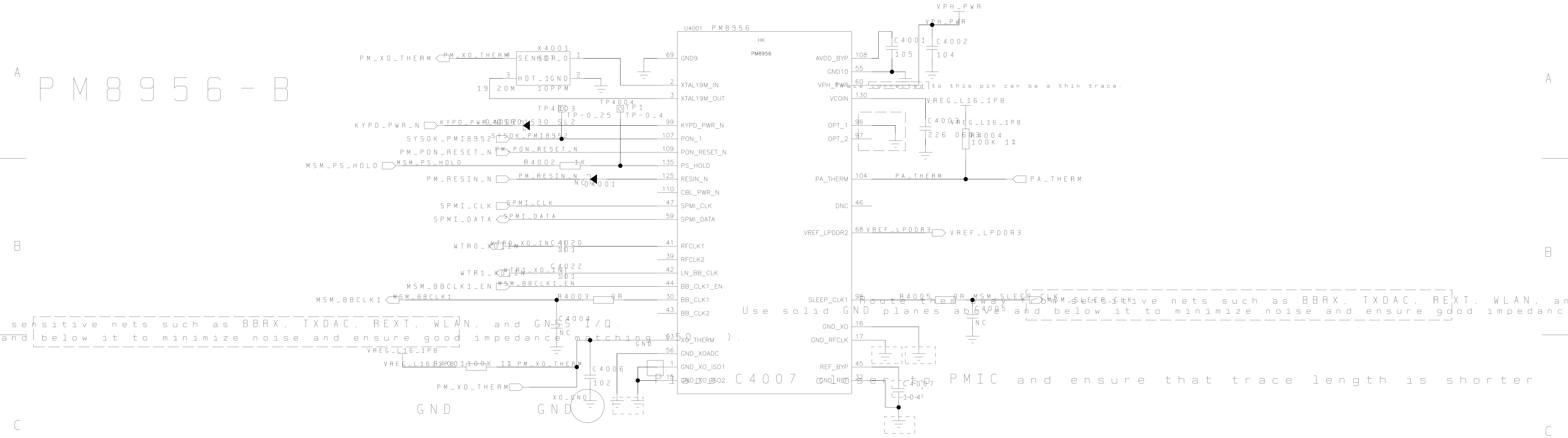
U4001 PM8956
HK
PM8956
GND9
XTAL19M_IN
XTAL19M_OUT
KYPD_PWR_N
PON_1
PON_RESET_N
PS_HOLD
RESIN_N
CBL_PWR_N
SPMI_CLK
SPMI_DATA
RFCLK1
RFCLK2
LN_BB_CLK
BB_CLK1_EN
BB_CLK1
BB_CLK2
XO_THERM
GND_XOADC
GND_XO_ISO1
GND_XO_ISO2
AVDD_BYP
GND10
VPH_PWR
VCOIN
OPT_1
OPT_2
PA_THERM
DNC
VREF_LPDDR2
SLEEP_CLK1
GND_XO
GND_RFCLK
REF_BYP
GND_REF
X4001
SENSOR_D
HOT_1GND
19.20M 10PPM
PM_XO_THERM
KYPD_PWR_N
SYS0K_PMI8952
PM_PON_RESET_N
MSM_PS_HOLD
PM_RESIN_N
SPMI_CLK
SPMI_DATA
WTR0_XO_IN
WTR1_XO_IN
MSM_BBCLK1_EN
MSM_BBCLK1
R4002 1K
R4003 0R
R4004 100K 1%
R4005 0R
D4001 NC
TP4003
TP4004
TP1
TP-0.25
TP-0.4
C4020 101
C4022 101
C4004 NC
C4001 105
C4002 104
C4003 226 0603
C4005 NC
C4006 102
C4007 104
VREG_L16_1P8
R4008 100K 1% PM_XO_THERM
VPH_PWR
PA_THERM
VREF_LPDDR3
MSM_SLEEP_CLK
XO_GND
GND

Trace connected to this pin can be a thin trace.

Route them away from sensitive nets such as BBRX, TXDAC, REXT, WLAN, and GNSS I/Q. Use solid GND planes above and below it to minimize noise and ensure good impedance matching (50 Ω).

Place C4007 close to PMIC and ensure that trace length is shorter

PM8956-D

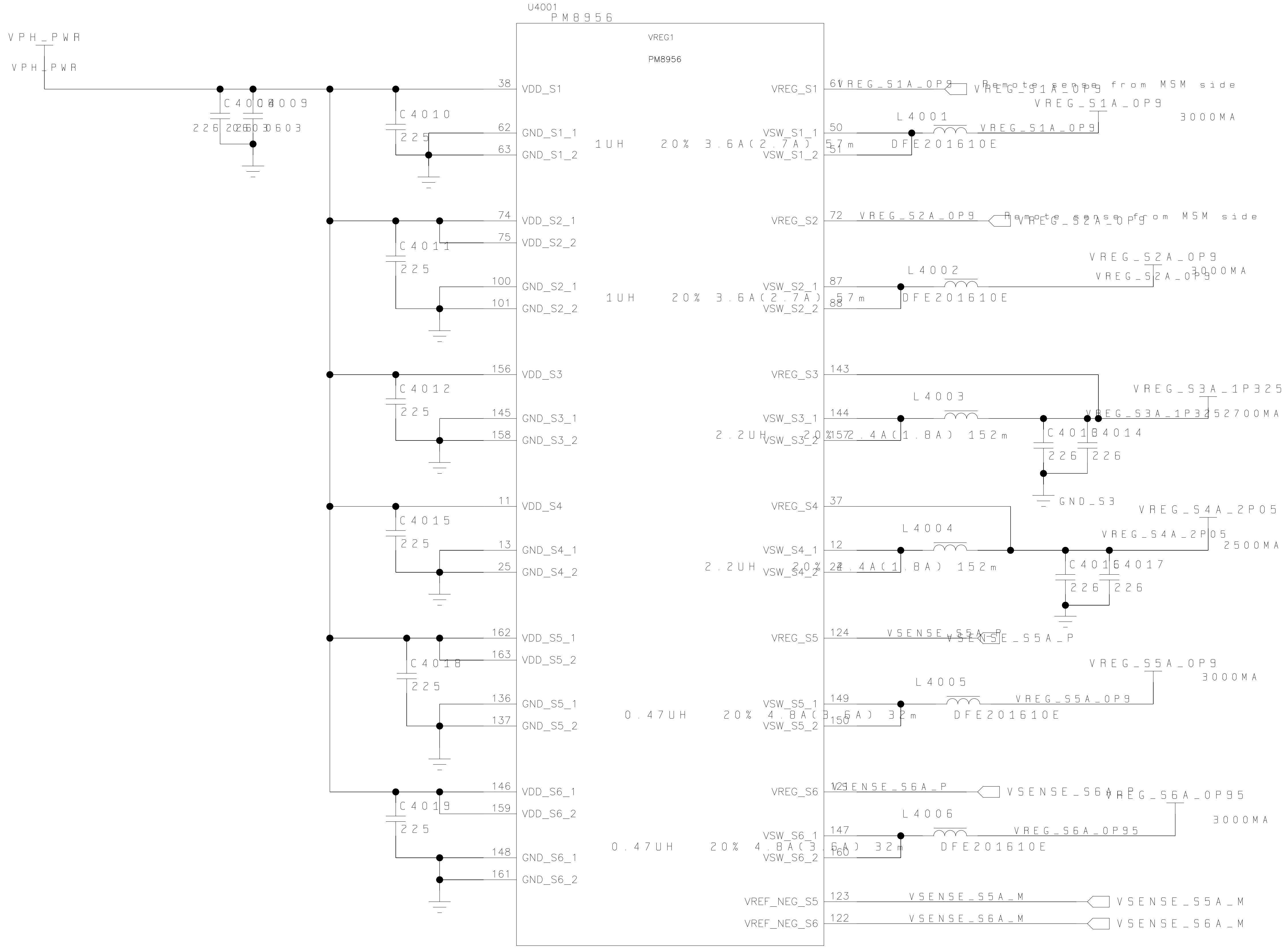
U4001 PM8956
VREG1
PM8956
VPH_PWR
VDD_S1
GND_S1_1
GND_S1_2
VDD_S2_1
VDD_S2_2
GND_S2_1
GND_S2_2
VDD_S3
GND_S3_1
GND_S3_2
VDD_S4
GND_S4_1
GND_S4_2
VDD_S5_1
VDD_S5_2
GND_S5_1
GND_S5_2
VDD_S6_1
VDD_S6_2
GND_S6_1
GND_S6_2
VREG_S1
VSW_S1_1
VSW_S1_2
VREG_S2
VSW_S2_1
VSW_S2_2
VREG_S3
VSW_S3_1
VSW_S3_2
VREG_S4
VSW_S4_1
VSW_S4_2
VREG_S5
VSW_S5_1
VSW_S5_2
VREG_S6
VSW_S6_1
VSW_S6_2
VREF_NEG_S5
VREF_NEG_S6
C4008 C4009 226 226 0603 0603
C4010 225
C4011 225
C4012 225
C4015 225
C4018 225
C4019 225
C4013 C4014 226 226
C4016 C4017 226 226
L4001 1UH 20% 3.6A(2.7A) 57m DFE201610E
L4002 1UH 20% 3.6A(2.7A) 57m DFE201610E
L4003 2.2UH 20% 2.4A(1.8A) 152m
L4004 2.2UH 20% 2.4A(1.8A) 152m
L4005 0.47UH 20% 4.8A(3.6A) 32m DFE201610E
L4006 0.47UH 20% 4.8A(3.6A) 32m DFE201610E
VREG_S1A_0P9
VREG_S2A_0P9
VREG_S3A_1P325
VREG_S4A_2P05
VREG_S5A_0P9
VREG_S6A_0P95
VSENSE_S5A_P
VSENSE_S6A_P
VSENSE_S5A_M
VSENSE_S6A_M
GND_S3
3000MA
2700MA
2500MA
Remote sense from MSM side

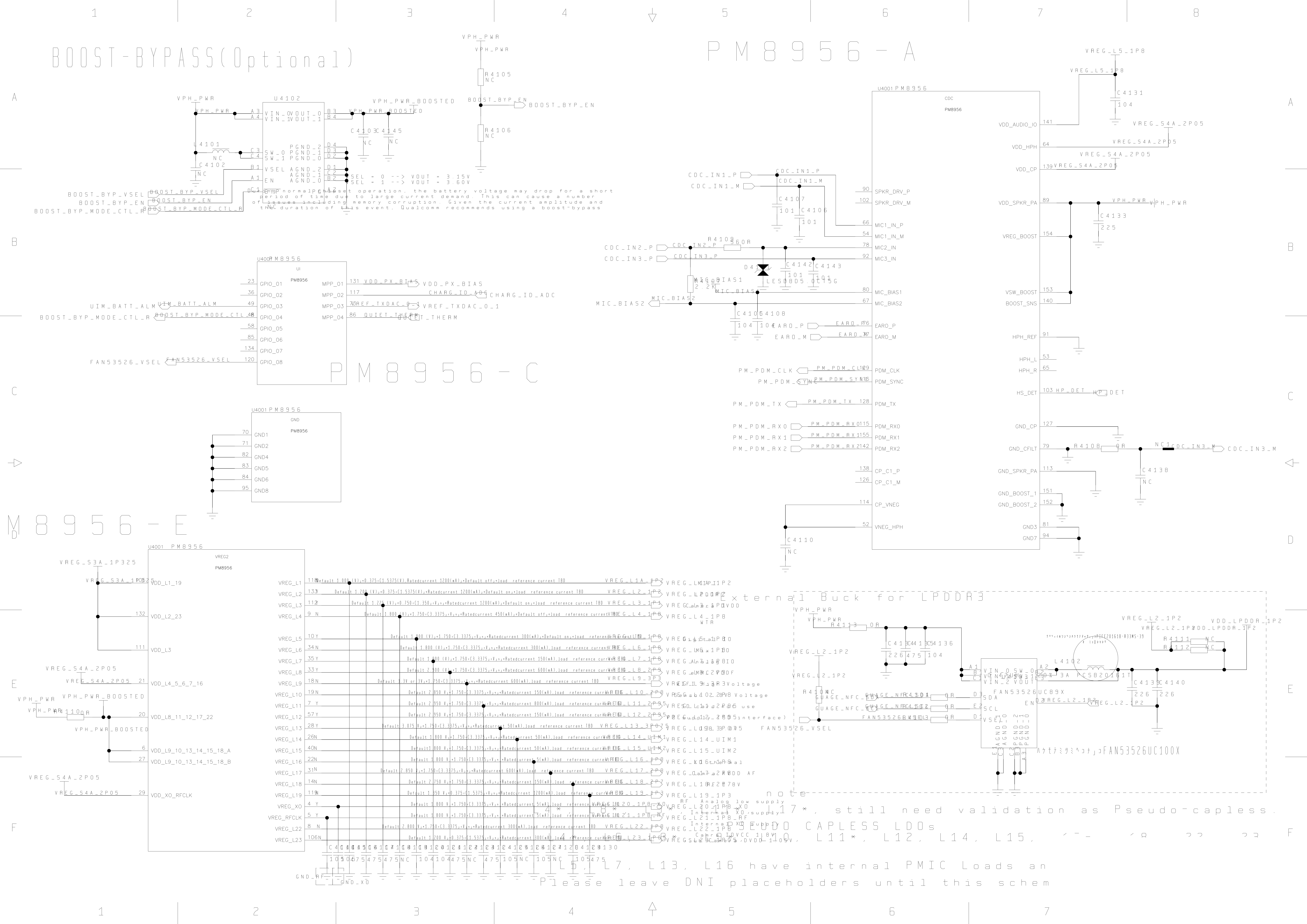
BOOST-BYPASS(Optional)
PM8956-A
PM8956-C
M8956-E
U4102
VPH_PWR
VPH_PWR_BOOSTED
VIN_0 VOUT_0
VIN_1 VOUT_1
SW_0 PGND_2
SW_1 PGND_1
PGND_0
VSEL AGND_2
EN AGND_1
AGND_0
L4101
C4102
C4103
C4145
NC
R4105
R4106
BOOST_BYP_EN
BOOST_BYP_VSEL
BOOST_BYP_MODE_CTL_R
VSEL = 0 --> VOUT = 3.15V
VSEL = 1 --> VOUT = 3.60V
During normal chipset operation, the battery voltage may drop for a short period of time due to large current demand. This can cause a number of issues including memory corruption. Given the current amplitude and the duration of this event, Qualcomm recommends using a boost-bypass
U4001 PM8956
CDC
PM8956
CDC_IN1_P
CDC_IN1_M
CDC_IN2_P
CDC_IN3_P
CDC_IN3_M
MIC_BIAS1
MIC_BIAS2
R4109
360R
R4100
2.2K
D4101
LESD8D5.0CT5G
C4107
C4106
C4142
C4143
C4105
C4108
C4110
101
104
EAR0_P
EAR0_M
PM_PDM_CLK
PM_PDM_SYNC
PM_PDM_TX
PM_PDM_RX0
PM_PDM_RX1
PM_PDM_RX2
SPKR_DRV_P
SPKR_DRV_M
MIC1_IN_P
MIC1_IN_M
MIC2_IN
MIC3_IN
MIC_BIAS1
MIC_BIAS2
EAR0_P
EAR0_M
PDM_CLK
PDM_SYNC
PDM_TX
PDM_RX0
PDM_RX1
PDM_RX2
CP_C1_P
CP_C1_M
CP_VNEG
VNEG_HPH
VDD_AUDIO_IO
VDD_HPH
VDD_CP
VDD_SPKR_PA
VREG_BOOST
VSW_BOOST
BOOST_SNS
HPH_REF
HPH_L
HPH_R
HS_DET
HP_DET
GND_CP
GND_CFILT
GND_SPKR_PA
GND_BOOST_1
GND_BOOST_2
GND3
GND7
VREG_L5_1P8
VREG_S4A_2P05
C4131
C4133
C4138
R4108
0R
225
UI
GPIO_01
GPIO_02
GPIO_03
GPIO_04
GPIO_05
GPIO_06
GPIO_07
GPIO_08
MPP_01
MPP_02
MPP_03
MPP_04
UIM_BATT_ALM
FAN53526_VSEL
VDD_PX_BIAS
CHARG_ID_ADC
VREF_TXDAC_0_1
QUIET_THERM
GND
GND1
GND2
GND4
GND5
GND6
GND8
VREG2
VREG_S3A_1P325
VDD_L1_19
VDD_L2_23
VDD_L3
VDD_L4_5_6_7_16
VDD_L8_11_12_17_22
VDD_L9_10_13_14_15_18_A
VDD_L9_10_13_14_15_18_B
VDD_XO_RFCLK
R4110
VREG_L1
VREG_L2
VREG_L3
VREG_L4
VREG_L5
VREG_L6
VREG_L7
VREG_L8
VREG_L9
VREG_L10
VREG_L11
VREG_L12
VREG_L13
VREG_L14
VREG_L15
VREG_L16
VREG_L17
VREG_L18
VREG_L19
VREG_XO
VREG_RFCLK
VREG_L22
VREG_L23
Default 1.800 (V);+0.375-[1.5375(V)];Ratedcurrent 1200(mA);+Default off;+load reference current TBD
VREG_L1_1P2
VREG_L2_1P2
VREG_L3_1P1
VREG_L4_1P8
WTR
VREG_L5_1P8
VREG_L6_1P8
VREG_L7_1P8
VREG_L8_2P9
VREG_L9_3P3
VREG_L10_2P8
VREG_L11_2P95
VREG_L12_2P95
VREG_L13_3P075
VREG_L14_UIM1
VREG_L15_UIM2
VREG_L16_1P8
VREG_L17_2P8
VREG_L18_2P7
VREG_L19_1P3
VREG_L20_1P8_XO
RF Analog low supply
Internal XO supply
VREG_L21_1P8_RF
VREG_L22_1P8
VREG_L23_1P05
Camera IOVCC 1.8V
DVDD 1.05V
GND_RF
GND_XO
External Buck for LPDDR3
R4113
C4134
C4135
C4136
226
475
VIN_0 SW_0
VIN_1 SW_1
VIN_2 VOUT
SDA
SCL
VSEL
EN
FAN53526UC89X
L4102
3A PCSB201E1T
C4139
C4140
R4111
R4112
VREG_L2_1P2
VDD_LPDDR_1P2
GUAGE_NFC_SDA
GUAGE_NFC_SCL
FAN53526UC100X
1
2
3
4
5
6
7
8
A
B
C
D
E
F

note
L4*, L8*, L9*, L11*, L17*, still need validation as Pseudo-capless.
PSEUDO CAPLESS LDOs
L4, L6, L8, L9, L10, L11*, L12, L14, L15,
L5, L7, L13, L16 have internal PMIC Loads an
Please leave DNI placeholders until this schem

PMI8004

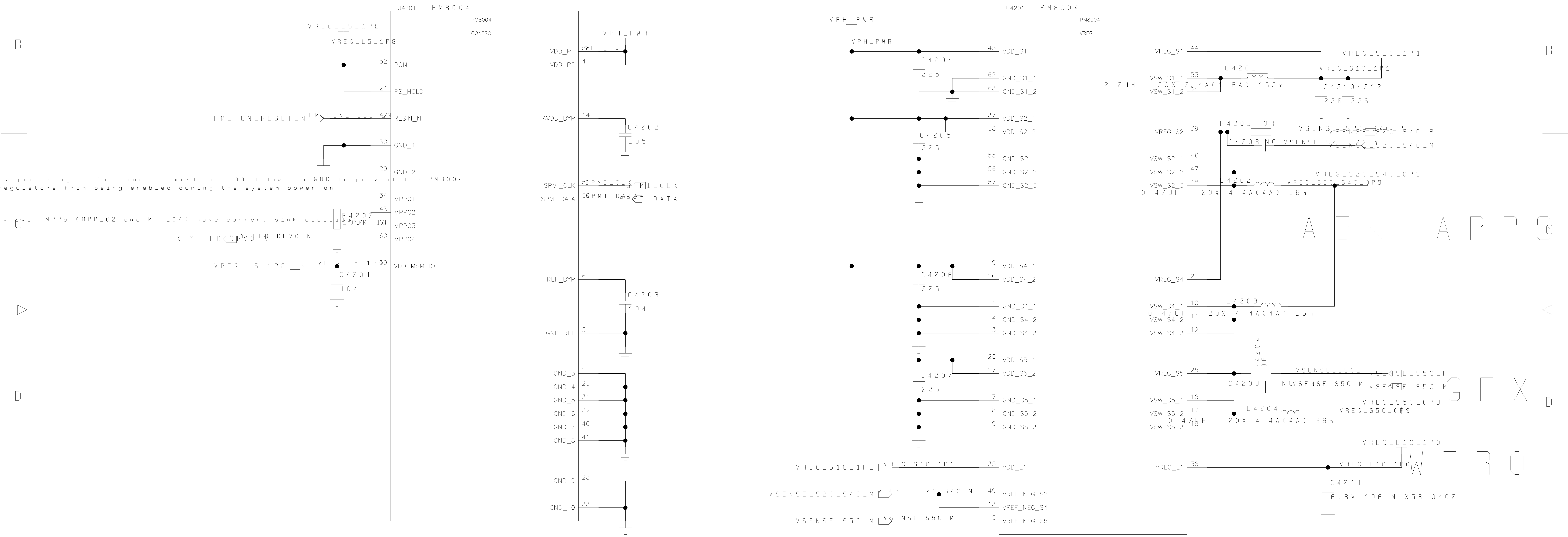
U4201 PM8004
PM8004
CONTROL
VREG_L5_1P8
PON_1
PS_HOLD
PM_PON_RESET_N
RESIN_N
GND_1
GND_2
a pre-assigned function, it must be pulled down to GND to prevent the PM8004
egulators from being enabled during the system power on
MPP01
MPP02
MPP03
MPP04
y even MPPs (MPP_02 and MPP_04) have current sink capability
R4202 100K 1%
KEY_LED_DRV0_N
VDD_MSM_IO
C4201 104
VPH_PWR
VDD_P1
VDD_P2
AVDD_BYP
C4202 105
SPMI_CLK
SPMI_DATA
REF_BYP
C4203 104
GND_REF
GND_3
GND_4
GND_5
GND_6
GND_7
GND_8
GND_9
GND_10
U4201 PM8004
PM8004
VREG
VPH_PWR
VDD_S1
C4204 225
GND_S1_1
GND_S1_2
VDD_S2_1
VDD_S2_2
C4205 225
GND_S2_1
GND_S2_2
GND_S2_3
VDD_S4_1
VDD_S4_2
C4206 225
GND_S4_1
GND_S4_2
GND_S4_3
VDD_S5_1
VDD_S5_2
C4207 225
GND_S5_1
GND_S5_2
GND_S5_3
VREG_S1C_1P1
VDD_L1
VSENSE_S2C_S4C_M
VREF_NEG_S2
VREF_NEG_S4
VSENSE_S5C_M
VREF_NEG_S5
VREG_S1
VSW_S1_1
VSW_S1_2
L4201 2.2UH 20% 2.4A(1.8A) 152m
C4210 C4212 226 226
VREG_S2
R4203 0R
VSENSE_S2C_S4C_P
C4208 NC
VSENSE_S2C_S4C_M
VSW_S2_1
VSW_S2_2
VSW_S2_3
L4202 0.47UH 20% 4.4A(4A) 36m
VREG_S2C_S4C_0P9
A5x APPS
VREG_S4
VSW_S4_1
VSW_S4_2
VSW_S4_3
L4203 0.47UH 20% 4.4A(4A) 36m
VREG_S5
R4204 0R
VSENSE_S5C_P
C4209 NC
VSENSE_S5C_M
GFX
VSW_S5_1
VSW_S5_2
VSW_S5_3
L4204 0.47UH 20% 4.4A(4A) 36m
VREG_S5C_0P9
VREG_L1
VREG_L1C_1P0
WTRO
C4211 6.3V 106 M X5R 0402

M Connector

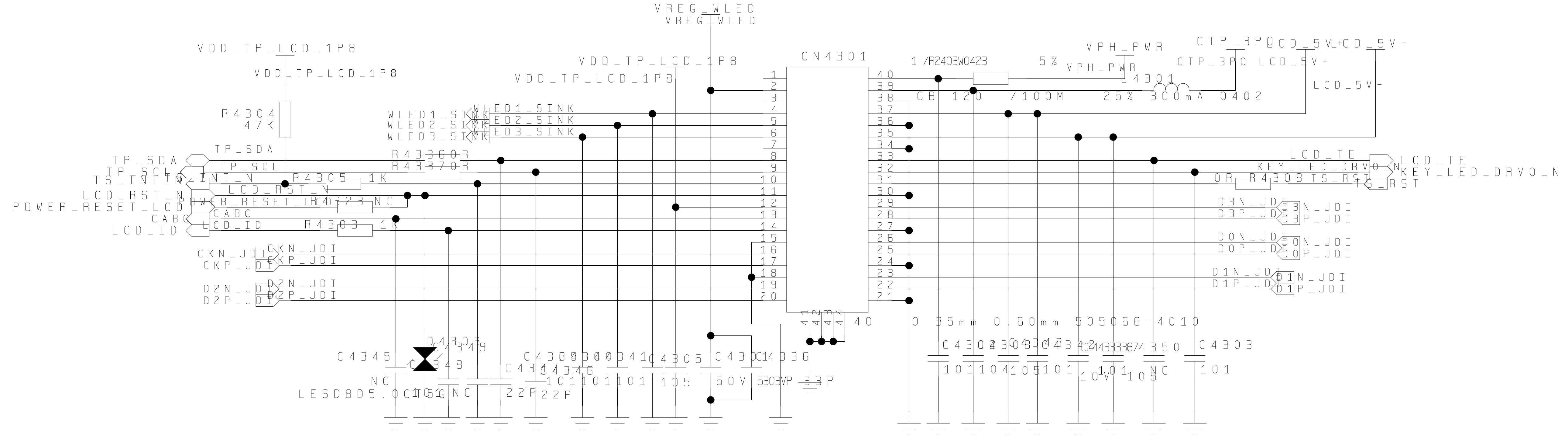
CN4301
VREG_WLED
VDD_TP_LCD_1P8
VPH_PWR
CTP_3P0
LCD_5V+
LCD_5V-
R4304 47K
TP_SDA
TP_SCL
TS_INT_N
LCD_RST_N
POWER_RESET_LCD
CABC
LCD_ID
CKN_JDI
CKP_JDI
D2N_JDI
D2P_JDI
WLED1_SINK
WLED2_SINK
WLED3_SINK
R4305 1K
R4303 1K
LCD_TE
KEY_LED_DRVO_N
TS_RST
D3N_JDI
D3P_JDI
D0N_JDI
D0P_JDI
D1N_JDI
D1P_JDI
L4301
GB 120 /100M 25% 300mA 0402
D4303
LESD8D5.0CT5G
C4345
C4305 105
C4303 101
0.35mm 0.60mm 505066-4010
10V 105
50V 33P

DSI CMF

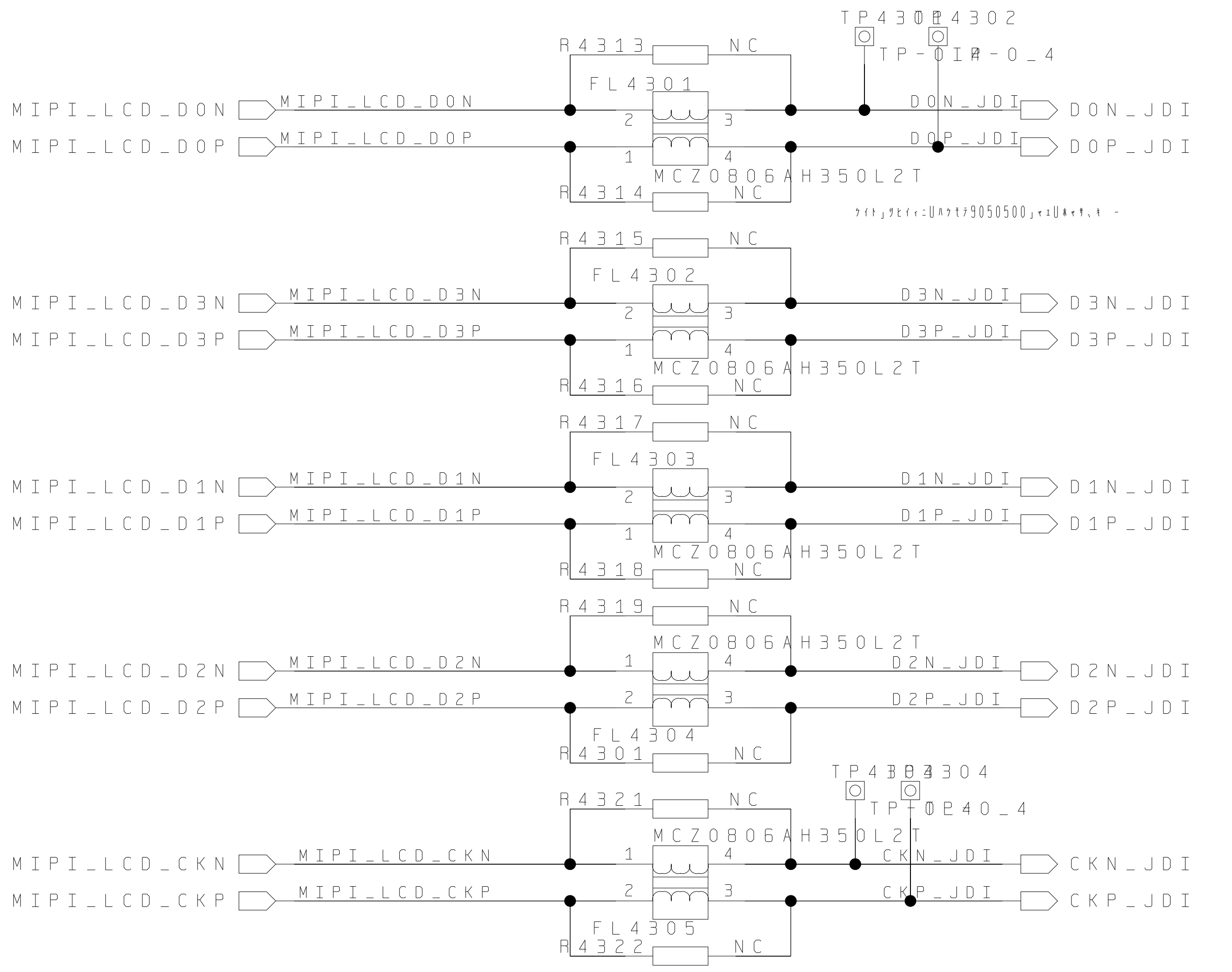
MIPI_LCD_D0N
MIPI_LCD_D0P
D0N_JDI
D0P_JDI
MIPI_LCD_D3N
MIPI_LCD_D3P
D3N_JDI
D3P_JDI
MIPI_LCD_D1N
MIPI_LCD_D1P
D1N_JDI
D1P_JDI
MIPI_LCD_D2N
MIPI_LCD_D2P
D2N_JDI
D2P_JDI
MIPI_LCD_CKN
MIPI_LCD_CKP
CKN_JDI
CKP_JDI
FL4301
FL4302
FL4303
FL4304
FL4305
MCZ0806AH350L2T
R4313 NC
R4314 NC
R4315 NC
R4316 NC
R4317 NC
R4318 NC
R4319 NC
R4301 NC
R4321 NC
R4322 NC
TP4301
TP4302
TP4303
TP4304
TP-0.4

WLED Driver

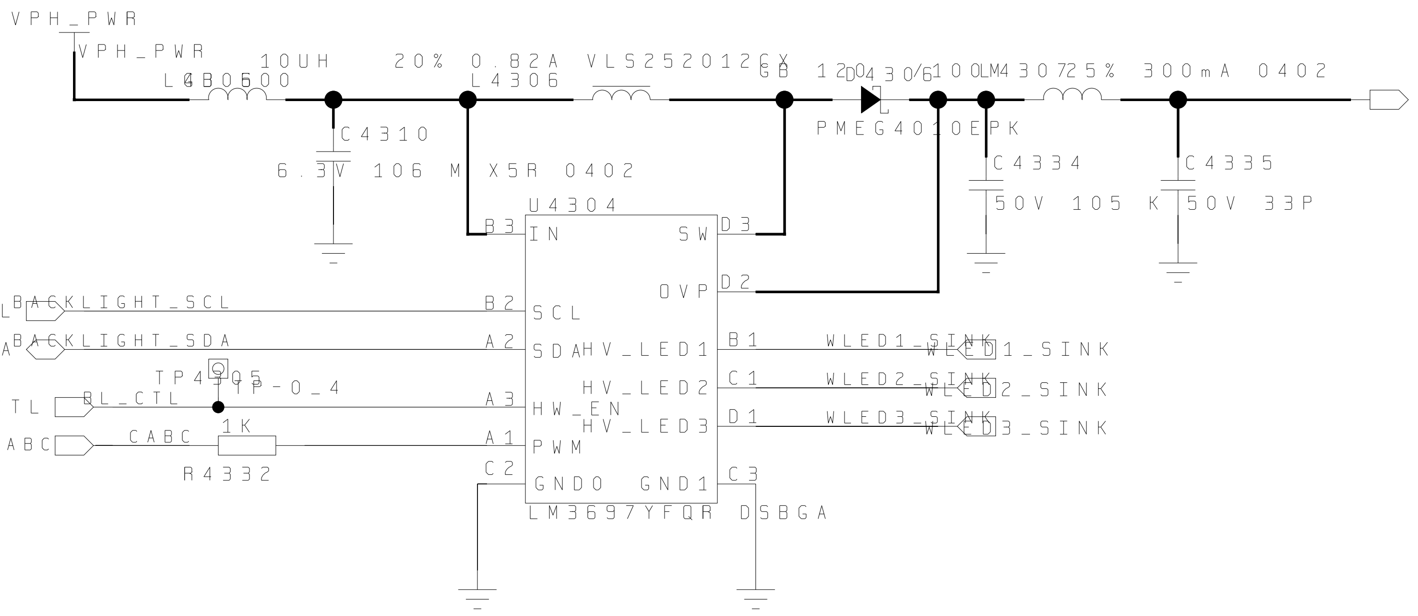
VPH_PWR
L4305 10UH 20% 0.82A VLS252012CX
C4310 6.3V 106 M X5R 0402
D4304 PMEG4010EPK
L4307 GB 120/100M 25% 300mA 0402
C4334 50V 105 K
C4335 50V 33P
VREG_WLED
U4304
IN
SW
OVP
SCL
SDA
HW_EN
PWM
HV_LED1
HV_LED2
HV_LED3
GND0
GND1
BACKLIGHT_SCL
BACKLIGHT_SDA
BL_CTL
CABC
TP4305 TP-0.4
R4332 1K
WLED1_SINK
WLED2_SINK
WLED3_SINK
LM3697YFQR DSBGA

LCD ±5V Driver

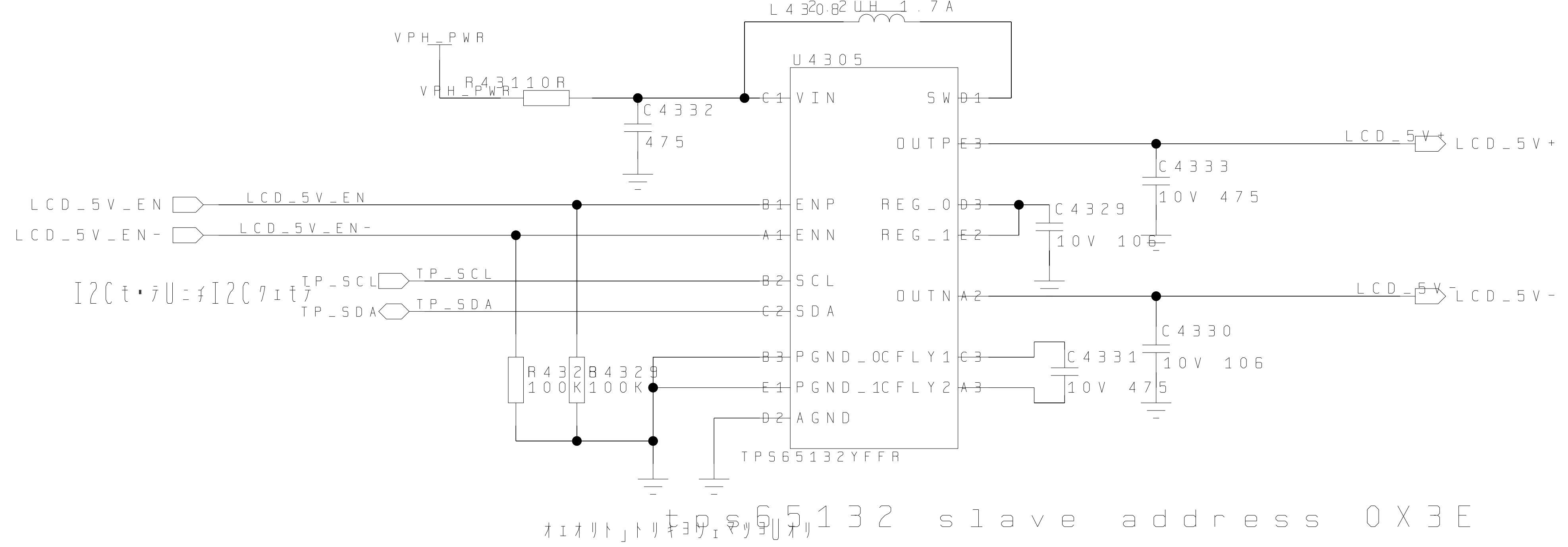
L4308 2UH 1.7A
VPH_PWR
R4311 0R
C4332 475
U4305
VIN
SW
OUTP
ENP
ENN
REG_0
REG_1
SCL
SDA
OUTN
PGND_0
PGND_1
CFLY1
CFLY2
AGND
LCD_5V_EN
LCD_5V_EN-
TP_SCL
TP_SDA
LCD_5V+
LCD_5V-
C4333 10V 475
C4329 10V 106
C4330 10V 106
C4331 10V 475
R4328 100K
R4325 100K
TPS65132YFFR

tps65132 slave address 0X3E

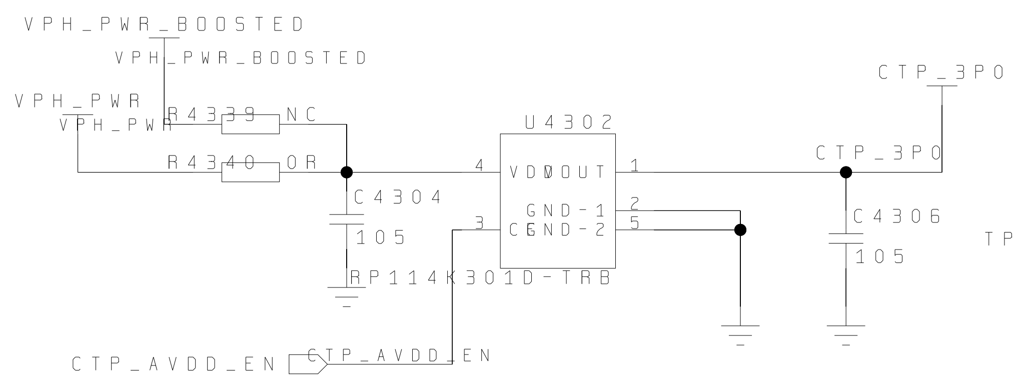
VPH_PWR_BOOSTED
VPH_PWR
R4339 NC
R4340 0R
U4302
VDD
VOUT
CE
GND-1
GND-2
C4304 105
C4306 105
CTP_3P0
CTP_AVDD_EN
RP114K301D-TRB

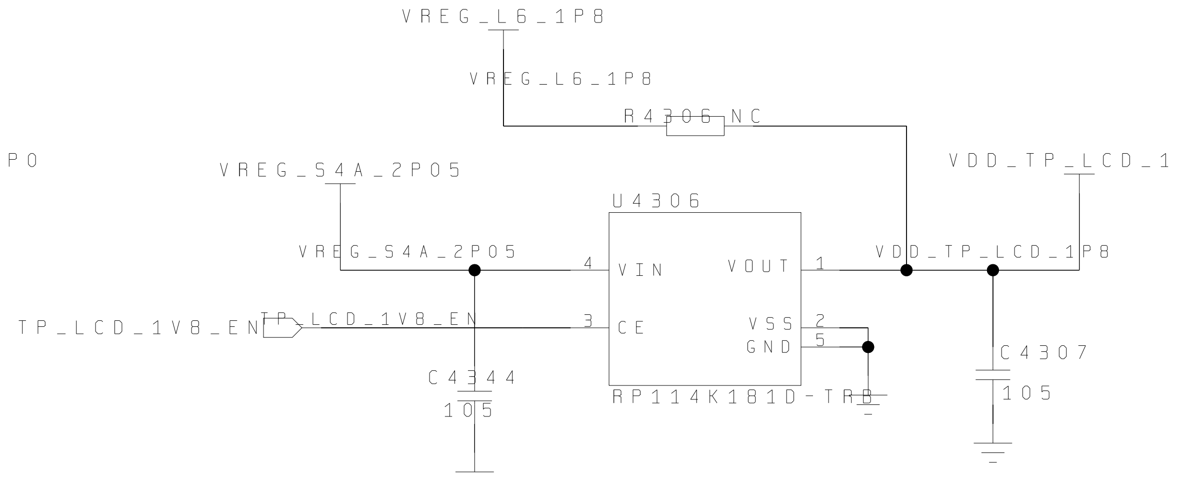
VREG_L6_1P8
R4306 NC
VREG_S4A_2P05
U4306
VIN
VOUT
CE
VSS
GND
TP_LCD_1V8_EN
C4344 105
C4307 105
VDD_TP_LCD_1P8
RP114K181D-TRB

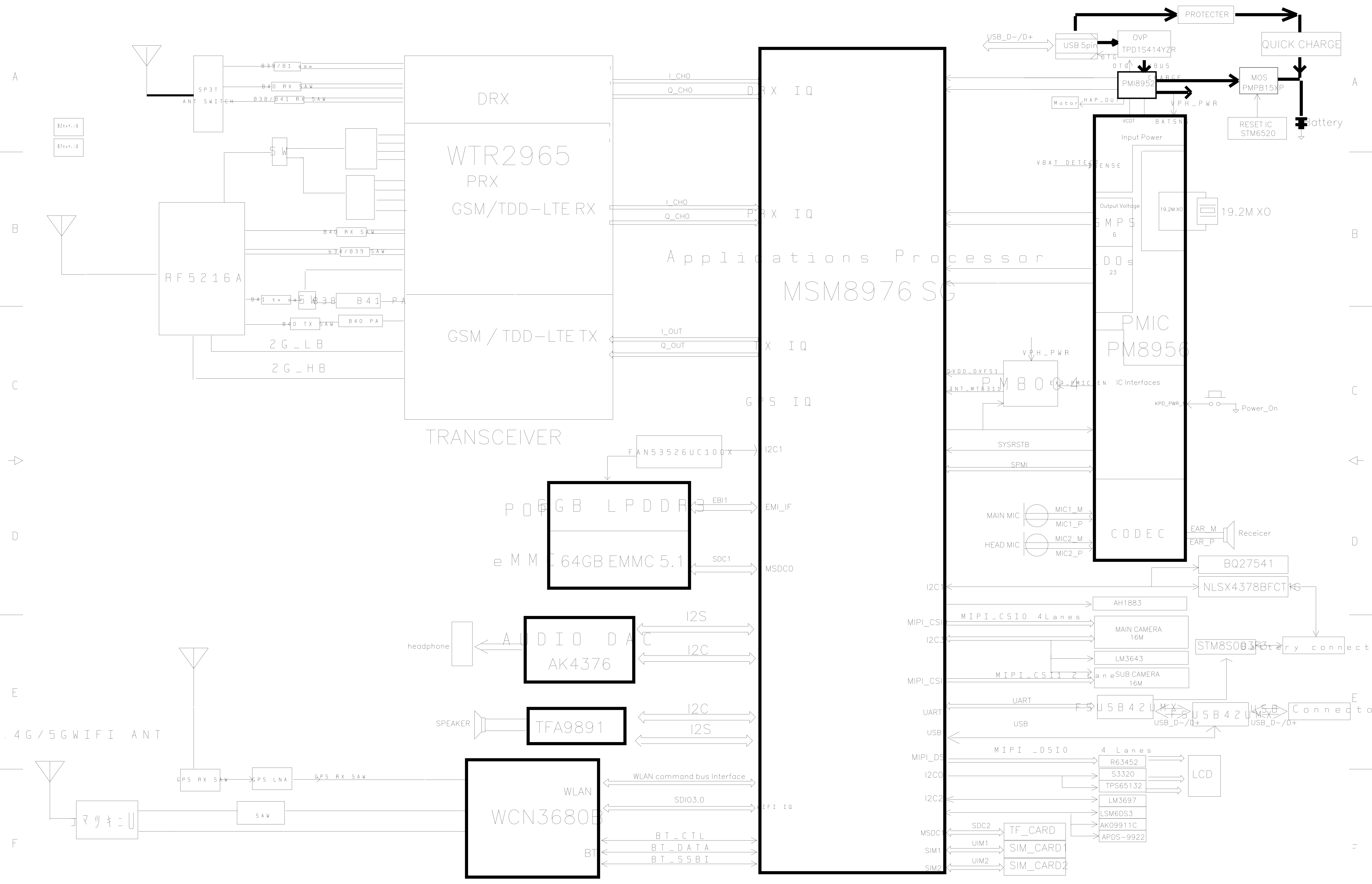
SP3T
ANT SWITCH
B39/B1 saw
B40 RX SAW
B38/B41 RX SAW
B2ﾋｮｳ､ﾆU
B7ﾋｮｳ､ﾆU
SW
RF5216A
B40 RX SAW
b34/B39 SAW
B41 tx saw
SW
B38
B41 PA
B40 TX SAW
B40 PA
2G_LB
2G_HB
DRX
WTR2965
PRX
GSM/TDD-LTE RX
GSM / TDD-LTE TX
TRANSCEIVER
I_CH0
Q_CH0
I_CH0
Q_CH0
I_OUT
Q_OUT
DRX IQ
PRX IQ
TX IQ
GPS IQ
Applications Processor
MSM8976 SG
FAN53526UC100X
I2C1
POP
3GB LPDDR3
EBI1
EMI_IF
eMMC
64GB EMMC 5.1
SDC1
MSDC0
headphone
AUDIO DAC
AK4376
I2S
I2C
SPEAKER
TFA9891
I2C
I2S
2.4G/5GWIFI ANT
GPS RX SAW
GPS LNA
GPS RX SAW
ﾀﾞﾏﾂｷﾆU
SAW
WCN3680B
WLAN
BT
WLAN command bus Interface
SDIO3.0
WIFI IQ
BT_CTL
BT_DATA
BT_SSBI
USB_D-/D+
USB 5pin
OVP
TPD1S414YZR
OTG
OTG
VBUS
PROTECTER
QUICK CHARGE
PMI8952
CHARGE
MOS
PMPB15XP
Motor
HAP_OUT
VPH_PWR
RESET IC
STM6520
Battery
VCDT
BATSNS
Input Power
VBAT DETECT
SENSE
Output Voltage
SMPS
6
LDOs
23
19.2M XO
19.2M XO
PMIC
PM8956
VPH_PWR
DVDD_DVFS1
INT_MT6311
PM8004
EXT_PMIC_EN
IC Interfaces
KPD_PWR_N
Power_On
SYSRSTB
SPMI
MAIN MIC
MIC1_M
MIC1_P
HEAD MIC
MIC2_M
MIC2_P
CODEC
EAR_M
EAR_P
Receicer
BQ27541
I2C1
NLSX4378BFCT1G
AH1883
MIPI_CSI0
MIPI_CSI0 4Lanes
MAIN CAMERA
16M
I2C3
LM3643
STM8S003F3
Battery connect
MIPI_CSI1
MIPI_CSI1 2 Lane
SUB CAMERA
16M
UART
UART
FSUSB42UMX
FSUSB42UMX
USB_D-/D+
USB
USB_D-/D+
Connector
USB
USB
MIPI_DSI0
MIPI _DSI0 4 Lanes
R63452
I2C0
S3320
TPS65132
LCD
I2C2
LM3697
LSM6DS3
AK09911C
APDS-9922
MSDC1
SDC2
TF_CARD
SIM1
UIM1
SIM_CARD1
SIM2
UIM2
SIM_CARD2