Oland DAC1

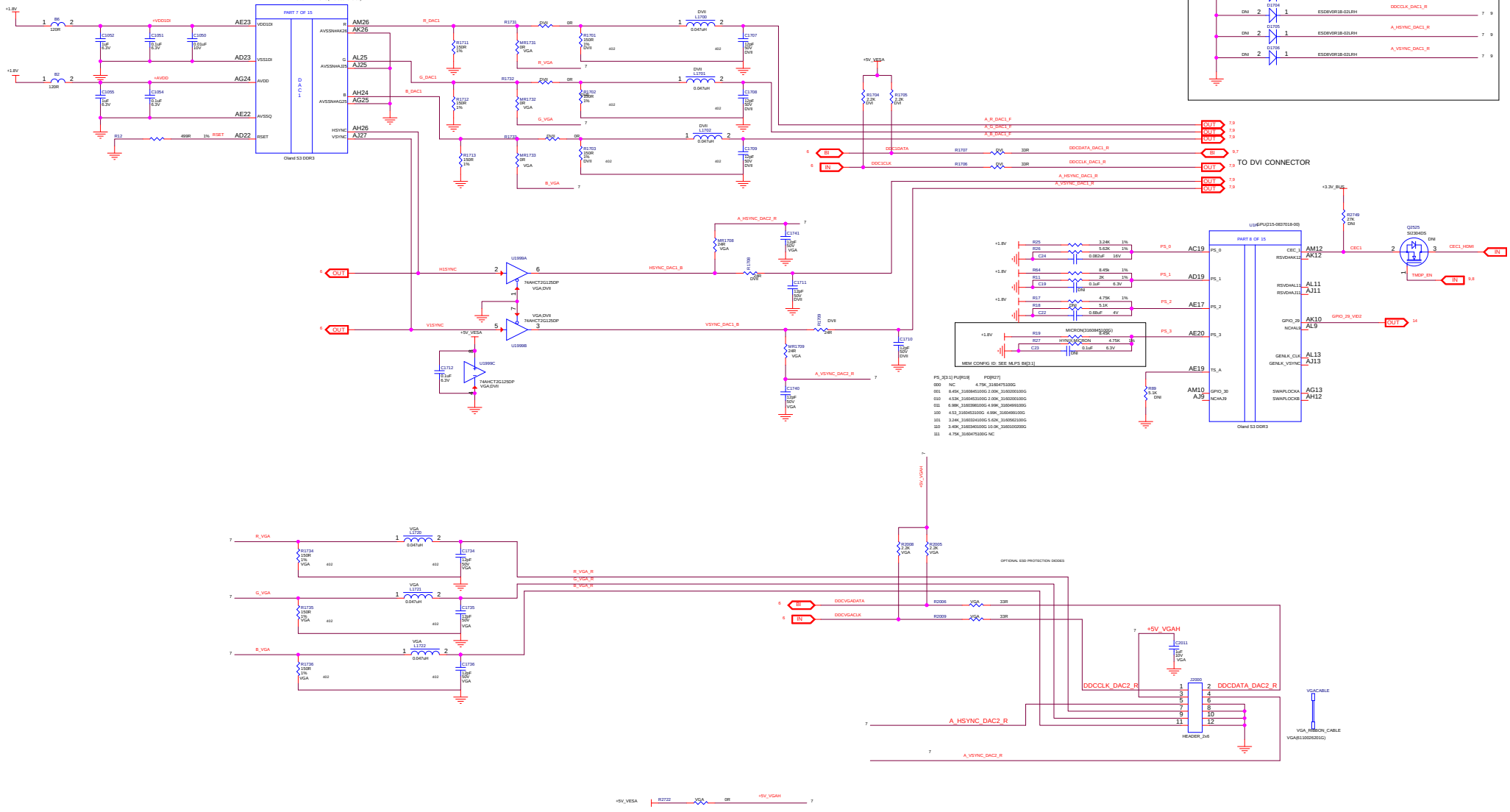
U1G
GPU(215-0837018-00)
PART 7 OF 15
Oland S3 DDR3
TO DVI CONNECTOR
OPTIONAL ESD PROTECTION DIODES
MEM CONFIG ID: SEE MLPS B#[3:1]
MICRON(316084510QG)
HYNIX(316084510QH)
U1999A
U1999B
U1999C
74AHCT2G125DP
VGA,DVII
U1J
PART 8 OF 15
Oland S3 DDR3
HEADER_2x6
VGACABLE
VGA_RIBBON_CABLE
VGA(B1100262G1G)
R_DAC1
G_DAC1
B_DAC1
HSYNC
VSYNC
R_VGA
G_VGA
B_VGA
A_HSYNC_DAC1_R
A_VSYNC_DAC1_R
DDCDATA_DAC1_R
DDCCLK_DAC1_R
DDCDATA_DAC2_R
DDCCLK_DAC2_R
A_HSYNC_DAC2_R
A_VSYNC_DAC2_R
+5V_VESA
+5V_VGAH
+3.3V_BUS
+1.8V
+VDD1DI
+AVDD
RSET
GPIO_29_VID2
CEC1_HDMI
TMDP_EN

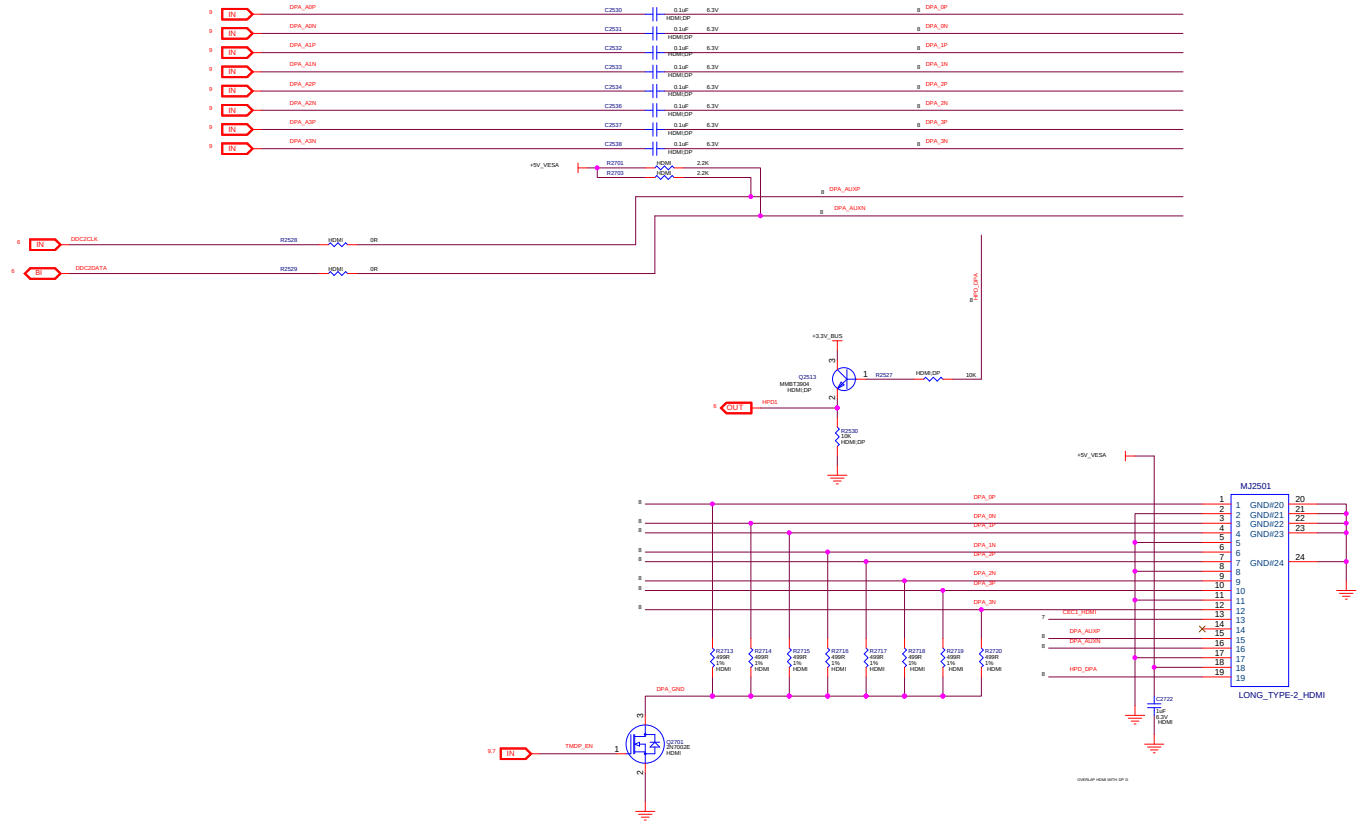
DPA_A0P
DPA_A0N
DPA_A1P
DPA_A1N
DPA_A2P
DPA_A2N
DPA_A3P
DPA_A3N
C2530
C2531
C2532
C2533
C2534
C2536
C2537
C2538
0.1uF
6.3V
HDMI:DP
DPA_0P
DPA_0N
DPA_1P
DPA_1N
DPA_2P
DPA_2N
DPA_3P
DPA_3N
+5V_VESA
R2701
R2703
HDMI
2.2K
DPA_AUXP
DPA_AUXN
DDC2CLK
DDC2DATA
R2528
R2529
0R
+3.3V_BUS
Q2513
MMBT3904
HDMI:DP
R2527
10K
HPD1
R2530
HPD_DPA
DPA_GND
TMDP_EN
Q2701
2N7002E
R2713
R2714
R2715
R2716
R2717
R2718
R2719
R2720
499R
1%
CEC1_HDMI
C2722
MJ2501
GND#20
GND#21
GND#22
GND#23
GND#24
LONG_TYPE-2_HDMI

(19) Debug Circuits

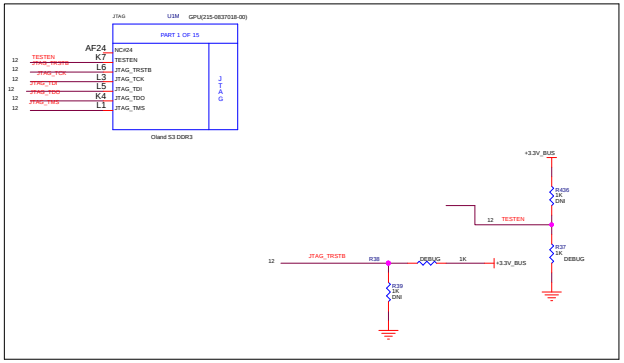

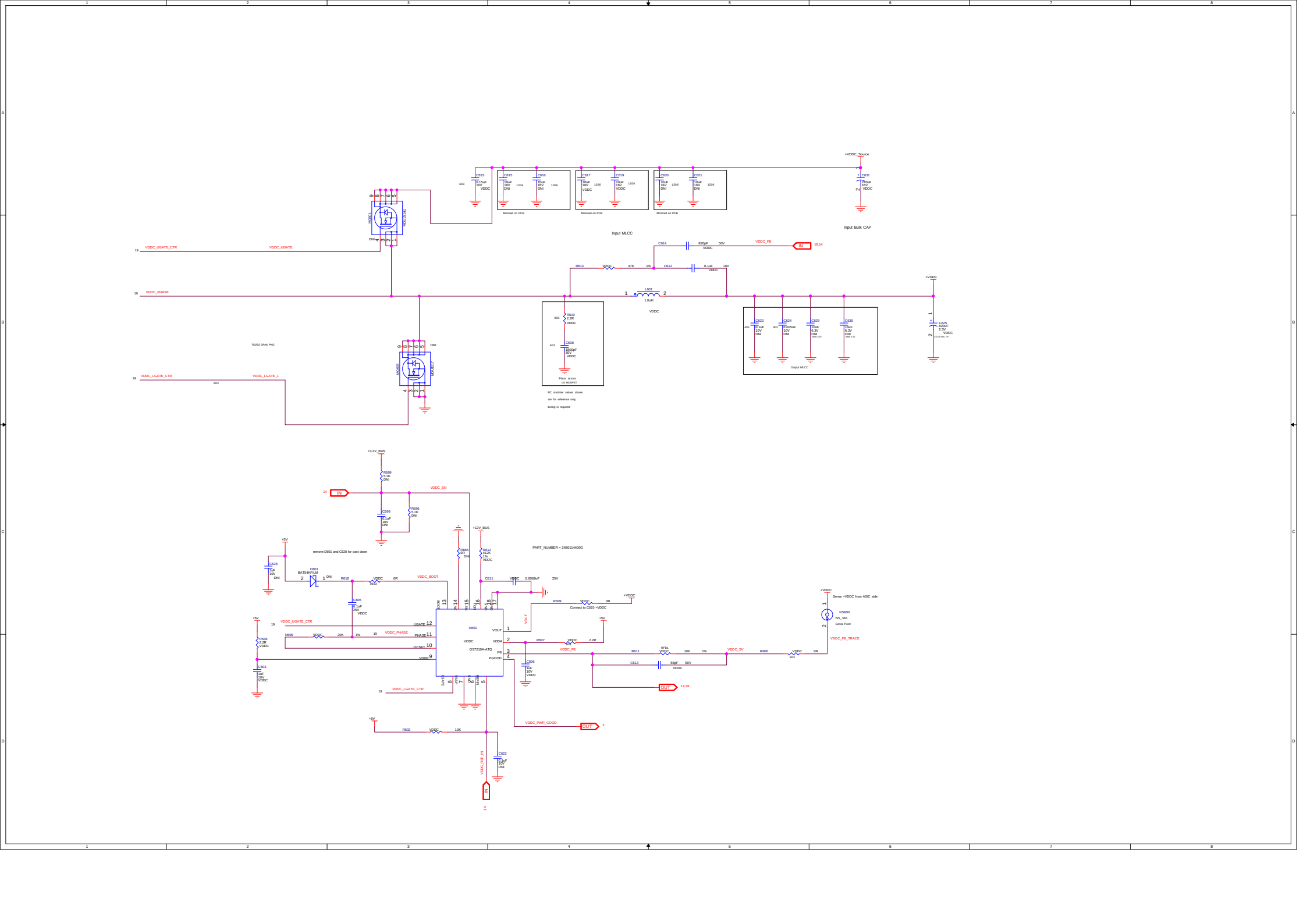
+VDDC_Source
Input Bulk CAP
Input MLCC
VDDC_UGATE_CTR
VDDC_UGATE
VDDC_PHASE
VDDC_LGATE_CTR
VDDC_LGATE_1
VDDC_FB
Output MLCC
Place across LS MOSFET
RC snubber values shown are for reference only, tuning is required
remove D601 and C628 for cost down
PART_NUMBER = 2480114400G
+3.3V_BUS
+12V_BUS
VDDC_EN
VDDC_BOOT
VDDC_PWR_GOOD
VDDC_FB_TRACE
Sense +VDDC from ASIC side
Connect to C625 +VDDC
GS7210A-ATQ

TABLE OF CONTENTS

SHEET NO.	SHEET NAME
1	TOC
2	PCI-E Edge Connector
3	Oland PCIEx8 Interface
4	Oland MEM I/F CHA
5	DDR3 CHA X16
6	Oland GPIO STRAP CF PLL
7	Oland DAC
8	Oland HDMI/DP
9	Oland sDVI-I CONN
10	Oland Power&GND
11	Oland Thermal&Mech
12	Oland Debug
13	Oland Unused Modules
14	PWR SEQ
15	Sub BOM
16	0.95V
17	1.8V
18	5V
19	VDDC
20	MVDD
21	Diagram
22	REVISION HISTORY

GROUP NAME DESCRIPTION	
COMMON	INSTALLED IN MAIN BOM
NOPN	NO PN,WON'T BE IN BOM
DNI	DON'T INSTALL
INT	INTERNAL BOM, WON'T BE IN PRODUCTION BOM
GPU	GPU PN
BK	BRACKET
HS	HEATSINK OR FANSINK
BACO	BACO circuit
SUBBOM	SUBBOM PN
2ND SOURCE	
ALT	ALTERNATIVE PN(FORMAT:ALT=ALTPN1/PN2;...)
SUB BOM	
MEM	MEMORY SUB BOM
DEBUG	DEBUG SUB BOM
POWER SUB BOM	
VDDC	VDDC SUB BOM
VDDCI	VDDCI SUB BOM
MVDD	MVDD SUB BOM
095	0.95V SUB BOM
1V8	1.8V SUB BOM

AMD - GRAPHICS
1 COMMERCE VALLEY
MARKHAM, ONTARIO, L3T 7X6

SHEET: TOC

DATE: Tue Dec 17 08:14:14 2013 REV: 1.0

SHEET NUMBER: 1 OF 22

DOCUMENT NUMBER: 105-C748xx-00A

NOTES: NOTE

CONFIDENTIAL AND PROPRIETARY TO ADVANCED MICRO DEVICES INC.

© 2013 Advanced Micro Devices

This AMD Board schematic and design is the exclusive property of AMD, and is provided only to entities under a non-disclosure agreement with AMD for evaluation purposes. Further distribution or disclosure is strictly prohibited. Use of this schematic and design for any purpose other than evaluation requires a Board Technology License Agreement with AMD. AMD makes no representations or warranties of any kind regarding this schematic and design, including, not limited to, any implied warranty of merchantability or fitness for a particular purpose, and disclaims responsibility for any consequences resulting from use of the information included herein.

TITLE: Oland Pro S3 DDR3 DVI+HDMI/DP+VGA 25W

PCI-EXPRESS EDGE CONNECTOR

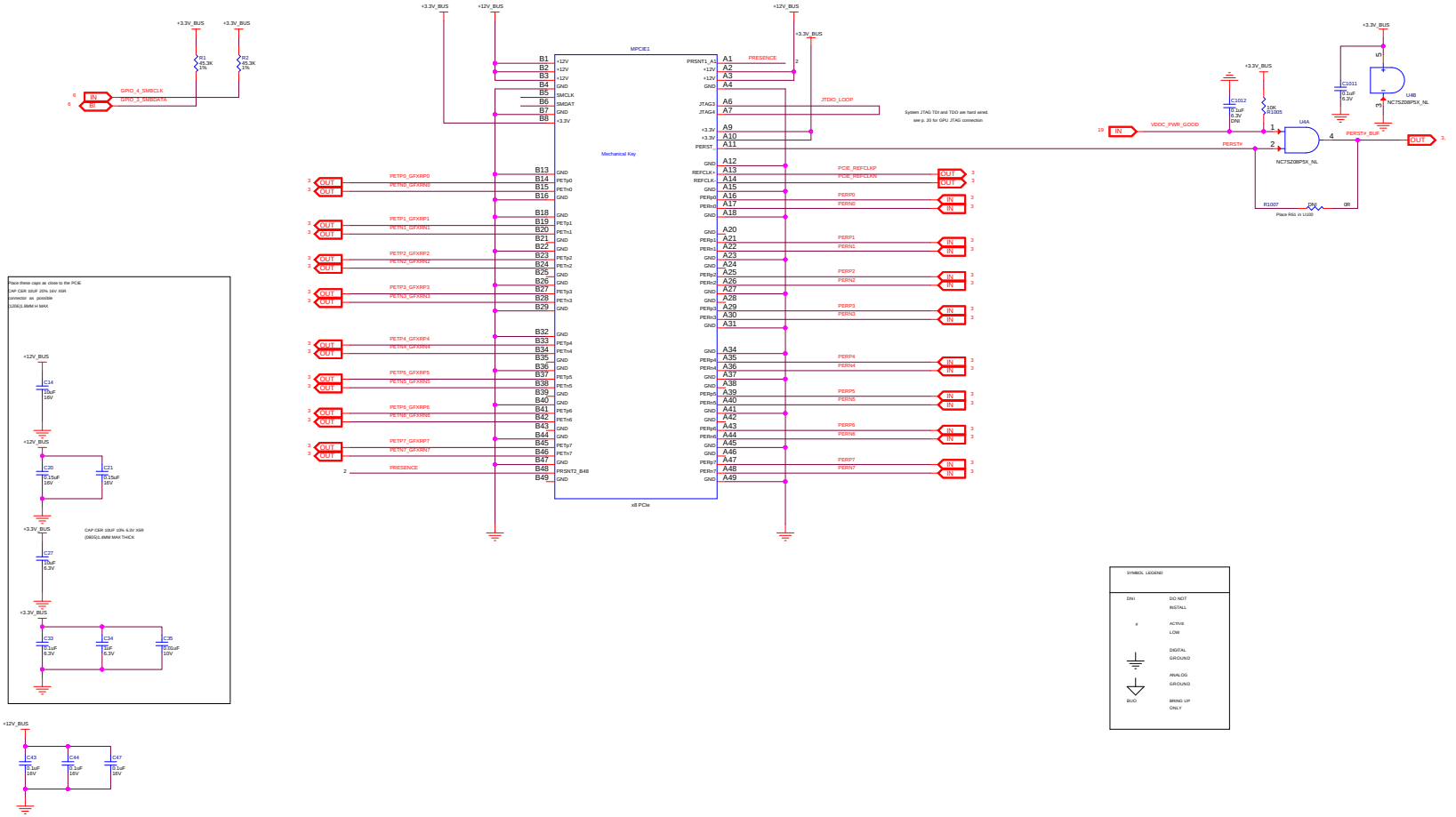

AMD - GRAPHICS
1 COMMERCE VALLEY
MARKHAM, ONTARIO, L3T 7X6

SHEET:	PCI-E Edge Connector
DATE:	Tue Dec 17 08:14:14 2013
REV:	1.0
SHEET NUMBER:	2 OF 22
DOCUMENT NUMBER:	105-C748xx-00A
TITLE:	Oland Pro S3 DDR3 DVI+HDMI/DP+VGA 25W

CONFIDENTIAL AND PROPRIETARY TO ADVANCED MICRO DEVICES INC.
© 2013 Advanced Micro Devices
This AMD Board schematic and design is the exclusive property of AMD, and is provided only to entities under a non-disclosure agreement with AMD for evaluation purposes. Further distribution or disclosure is strictly prohibited. Use of this schematic and design for any purpose other than evaluation requires a Board Technology License Agreement with AMD. AMD makes no representations or warranties of any kind regarding this schematic and design, including, not limited to, any implied warranty of merchantability or fitness for a particular purpose, and disclaims responsibility for any consequences resulting from use of the information included herein.

OLAND PCIe Interface

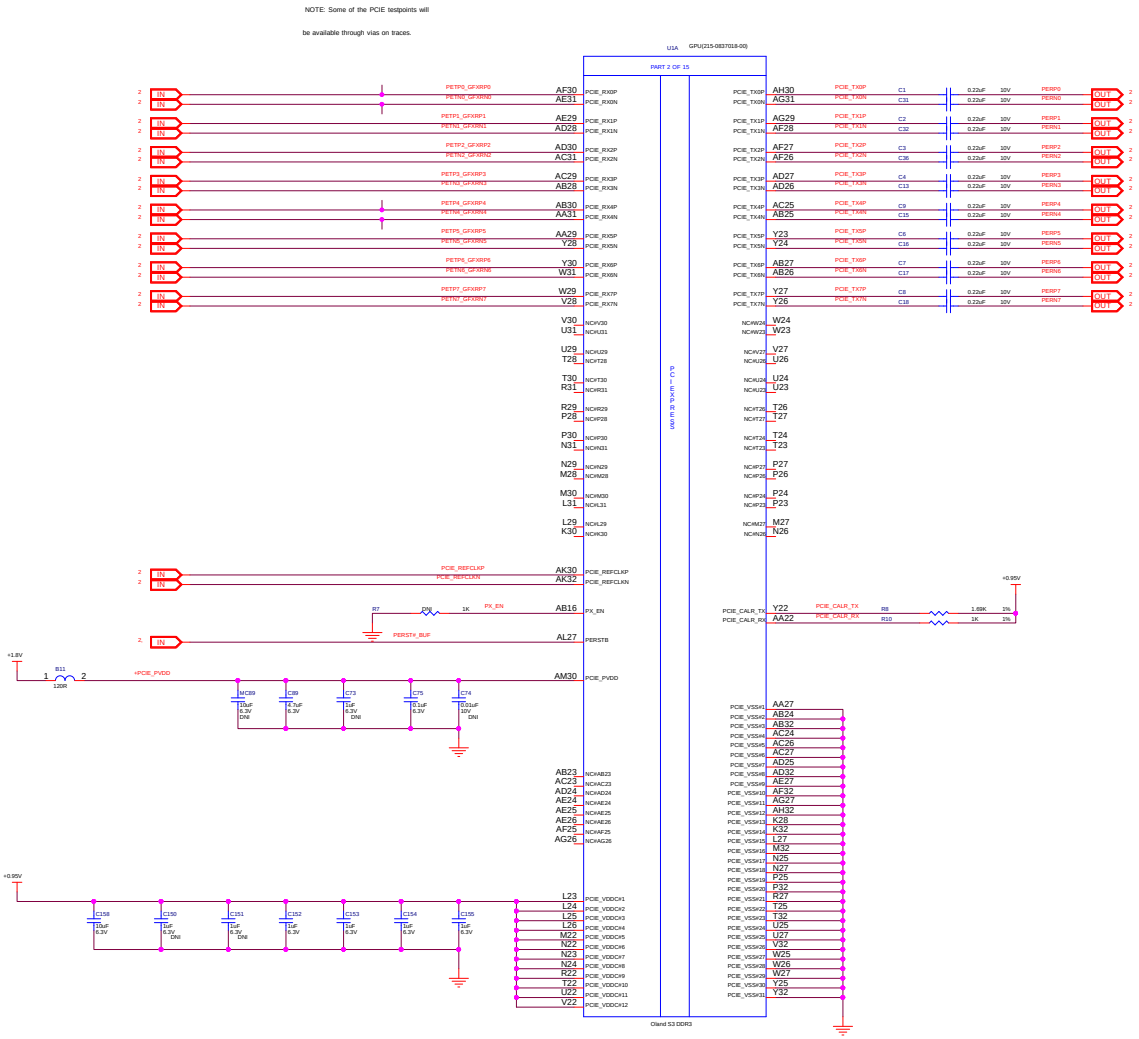

AMD - GRAPHICS 1 COMMERCE VALLEY MARKHAM, ONTARIO, L3T 7X6	
SHEET:	Oland PCIEx8 Interface
DATE:	Tue Dec 17 08:14:14 2013
REV:	1.0
SHEET NUMBER:	3 OF 22
DOCUMENT NUMBER:	105-C748xx-00A
TITLE:	Oland Pro S3 DDR3 DVI+HDMI/DP+VGA 25W

CONFIDENTIAL AND PROPRIETARY TO ADVANCED MICRO DEVICES INC.

© 2013 Advanced Micro Devices

This AMD Board schematic and design is the exclusive property of AMD, and is provided only to entities under a non-disclosure agreement with AMD for evaluation purposes. Further distribution or disclosure is strictly prohibited. Use of this schematic and design for any purpose other than evaluation requires a Board Technology License Agreement with AMD. AMD makes no representations or warranties of any kind regarding this schematic and design, including, not limited to, any implied warranty of merchantability or fitness for a particular purpose, and disclaims responsibility for any consequences resulting from use of the information included herein.

Oland S3 MEM Interface Ch A&B

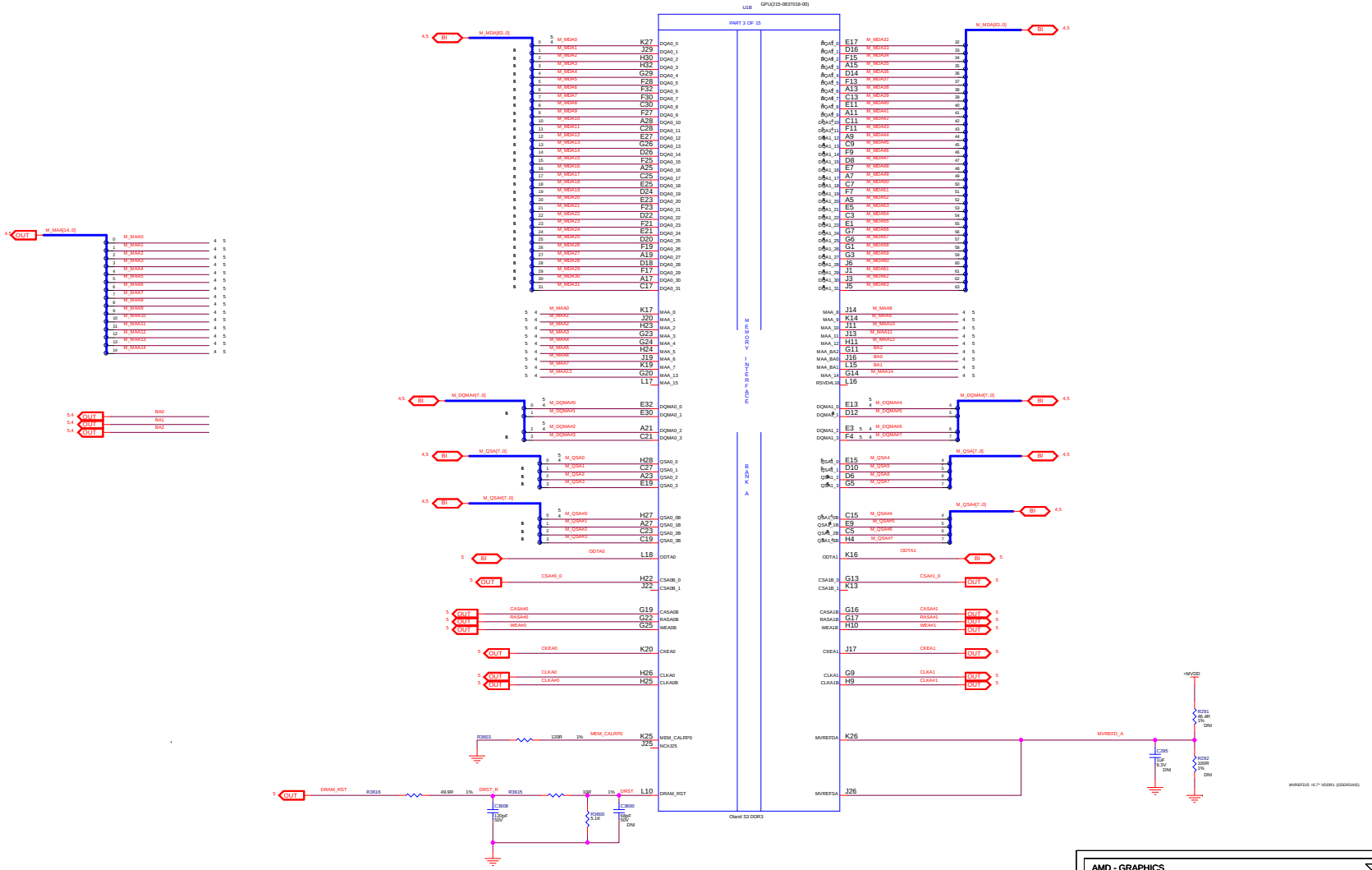

AMD - GRAPHICS 1 COMMERCE VALLEY MARKHAM, ONTARIO, L3T 7X6	
SHEET:	Oland MEM I/F CHA
DATE:	Tue Dec 17 08:14:15 2013
REV:	1.0
SHEET NUMBER:	4 OF 22
DOCUMENT NUMBER:	105-C748xx-00A
TITLE:	Oland Pro S3 DDR3 DVI+HDMI/DP+VGA 25W

CONFIDENTIAL AND PROPRIETARY TO ADVANCED MICRO DEVICES INC.

© 2013 Advanced Micro Devices

This AMD Board schematic and design is the exclusive property of AMD, and is provided only to entities under a non-disclosure agreement with AMD for evaluation purposes. Further distribution or disclosure is strictly prohibited. Use of this schematic and design for any purpose other than evaluation requires a Board Technology License Agreement with AMD. AMD makes no representations or warranties of any kind regarding this schematic and design, including, not limited to, any implied warranty of merchantability or fitness for a particular purpose, and disclaims responsibility for any consequences resulting from use of the information included herein.

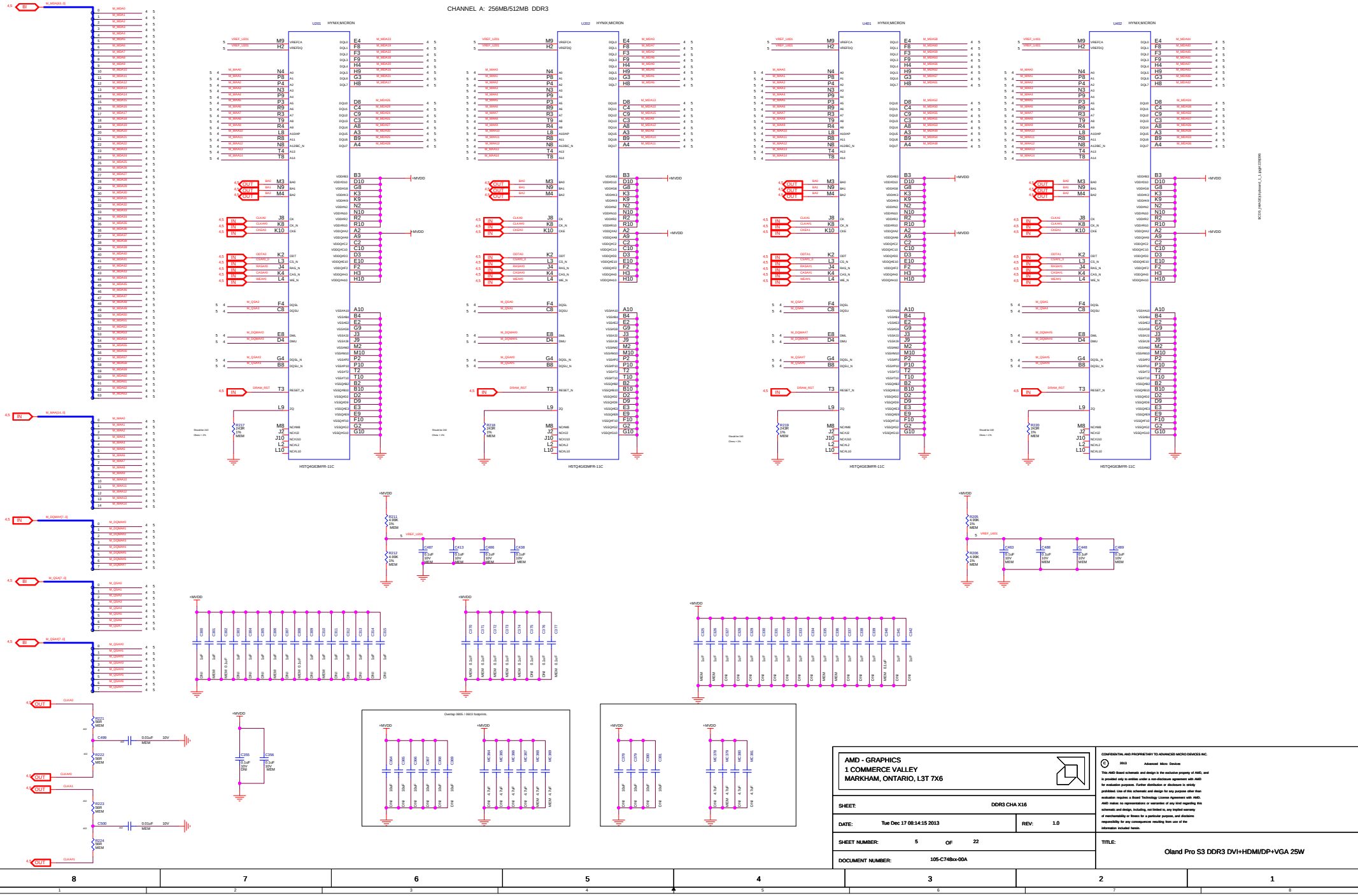
CHANNEL A: 256MB/512MB DDR3
U201 HYNIX/MICRON
U202 HYNIX/MICRON
U401 HYNIX/MICRON
U402 HYNIX/MICRON
H5TQ4G63MFR-11C
+MVDD
AMD - GRAPHICS
1 COMMERCE VALLEY
MARKHAM, ONTARIO, L3T 7X6
SHEET: DDR3 CHA X16
DATE: Tue Dec 17 08:14:15 2013
REV: 1.0
SHEET NUMBER: 5 OF 22
DOCUMENT NUMBER: 105-C748xx-00A
TITLE: Oland Pro S3 DDR3 DVI+HDMI/DP+VGA 25W
CONFIDENTIAL AND PROPRIETARY TO ADVANCED MICRO DEVICES INC.
© 2013 Advanced Micro Devices
The AMD Board schematic and design is the exclusive property of AMD, and is provided only to entities under a non-disclosure agreement with AMD for evaluation purposes. Further distribution or disclosure is strictly prohibited. Use of this schematic and design for any purpose other than evaluation requires a Board Technology License Agreement with AMD. AMD makes no representations or warranties of any kind regarding this schematic and design, including, not limited to, any implied warranty of merchantability or fitness for a particular purpose, and disclaims responsibility for any consequences resulting from use of the information included herein.

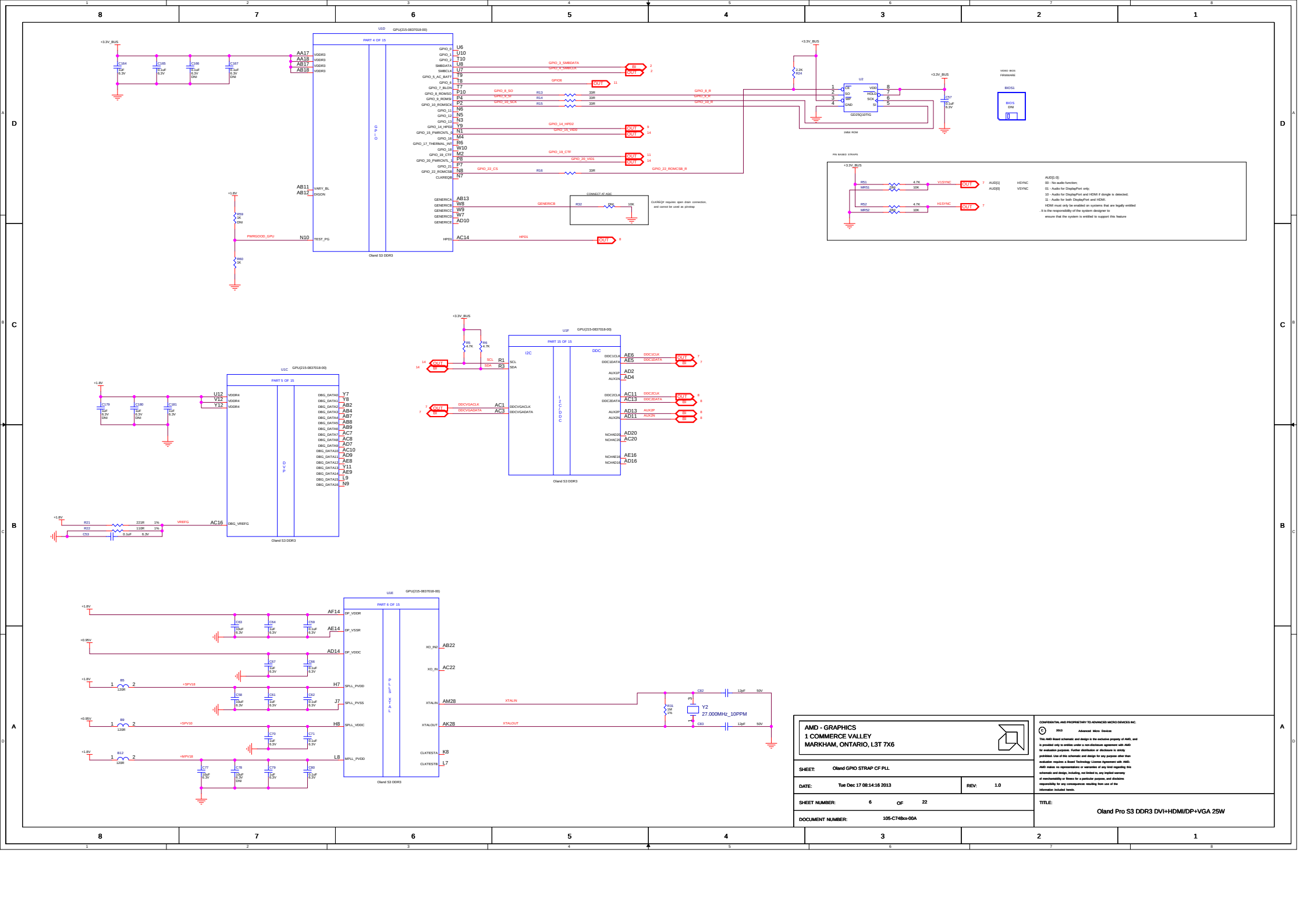
U1D GPU(215-0837018-00)
PART 4 OF 15
GPIO
Oland S3 DDR3
U2
GD25Q10TIG
1Mbit ROM
BIOS1
PIN BASED STRAPS
U1C GPU(215-0837018-00)
PART 5 OF 15
DVP
U1F GPU(215-0837018-00)
PART 15 OF 15
I2C
DDC
I2CDDC
U1E GPU(215-0837018-00)
PART 6 OF 15
PLLXTAL
Y2
27.000MHz_10PPM
AMD - GRAPHICS
1 COMMERCE VALLEY
MARKHAM, ONTARIO, L3T 7X6
SHEET: Oland GPIO STRAP CF PLL
DATE: Tue Dec 17 08:14:16 2013
REV: 1.0
SHEET NUMBER: 6 OF 22
DOCUMENT NUMBER: 105-C748xx-00A
TITLE: Oland Pro S3 DDR3 DVI+HDMI/DP+VGA 25W

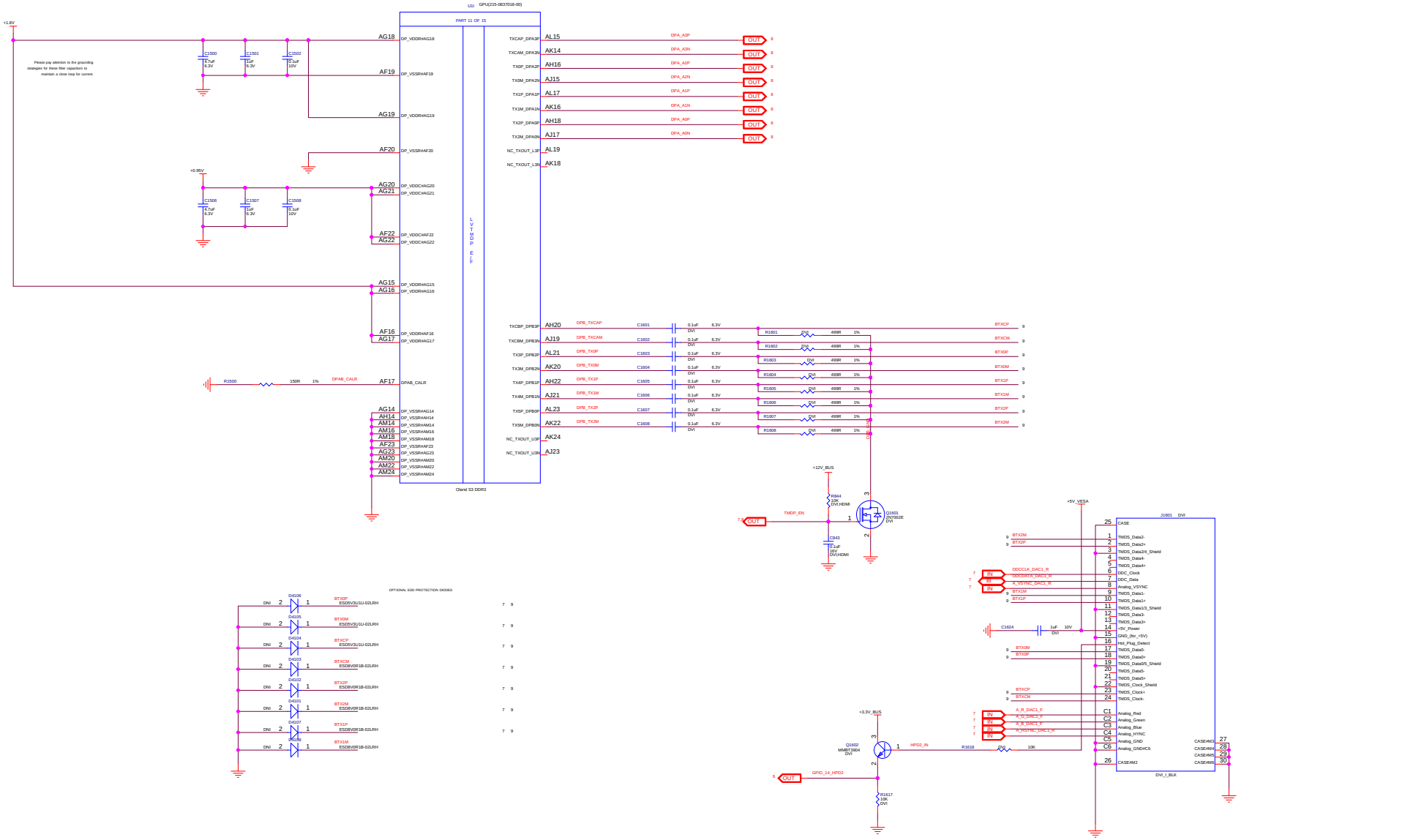

AMD - GRAPHICS 1 COMMERCE VALLEY MARKHAM, ONTARIO, L3T 7X6	
SHEET: Oland sDVI-I CONN	
DATE: Tue Dec 17 08:14:17 2013	REV: 1.0
SHEET NUMBER: 9 OF 22	
DOCUMENT NUMBER: 105-C748xx-00A	
NOTES: NOTE	

CONFIDENTIAL AND PROPRIETARY TO ADVANCED MICRO DEVICES INC.
© 2013 Advanced Micro Devices
This AMD Board schematic and design is the exclusive property of AMD, and is provided only to entities under a non-disclosure agreement with AMD for evaluation purposes. Further distribution or disclosure is strictly prohibited. Use of this schematic and design for any purpose other than evaluation requires a Board Technology License Agreement with AMD. AMD makes no representations or warranties of any kind regarding this schematic and design, including, not limited to, any implied warranty of merchantability or fitness for a particular purpose, and disclaims responsibility for any consequences resulting from use of the information included herein.

TITLE: Oland Pro S3 DDR3 DVI+HDMI/DP+VGA 25W

OLAND S3 Power & GND

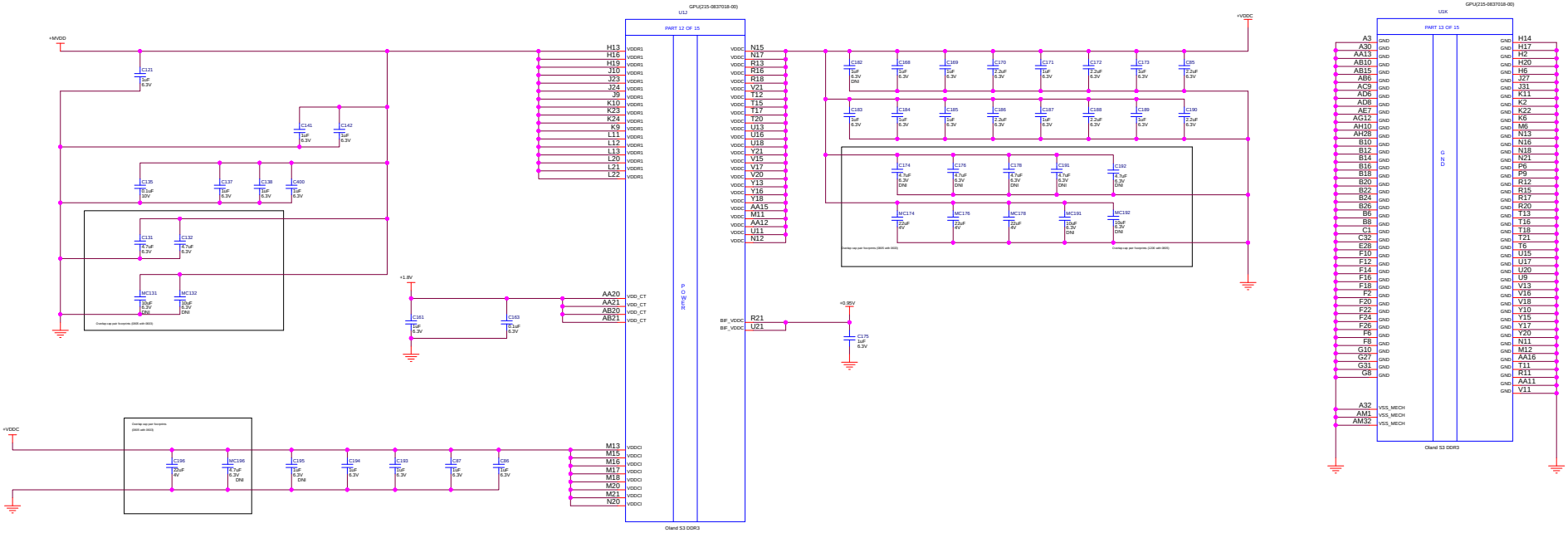

AMD - GRAPHICS 1 COMMERCE VALLEY MARKHAM, ONTARIO, L3T 7X6	
SHEET: Oland Power&GND	
DATE: Tue Dec 17 08:14:17 2013	REV: 1.0
SHEET NUMBER: 10 OF 22	
DOCUMENT NUMBER: 105-C748cx-00A	TITLE: Oland Pro S3 DDR3 DVI+HDMI/DP+VGA 25W

CONFIDENTIAL AND PROPRIETARY TO ADVANCED MICRO DEVICES INC.
© 2013 Advanced Micro Devices
The AMD Board schematic and design is the exclusive property of AMD, and is provided only to entities under a non-disclosure agreement with AMD for evaluation purposes. Further distribution or disclosure is strictly prohibited. Use of this schematic and design for any purpose other than evaluation requires a Board Technology License Agreement with AMD. AMD makes no representations or warranties of any kind regarding this schematic and design, including, not limited to, any implied warranty of merchantability or fitness for a particular purpose, and disclaims responsibility for any consequences resulting from use of the information included herein.

Mechanical and Thermal Management

Install R4520	GPIO6 is 0: Fan stop GPIO6 is PWM: Fan running
Install R4516 Q4511,R4519	GPIO6 is 1: Fan stop GPIO6 is PWM: Fan running

Fan Control

Critial Temperature Fault

Critial Temperature Fault

33W VC FANSINK

SHEET:	Oland Thermal&Mech					
DATE:	Tue Dec 17 08:14:17 2013		REV:	1.0		
SHEET NUMBER:	11	OF	22			
DOCUMENT NUMBER:	105-C748xx-00A					

AMD - GRAPHICS
1 COMMERCE VALLEY
MARKHAM, ONTARIO, L3T 7X6

TITLE: Oland Pro S3 DDR3 DVI+HDMI/DP+VGA 25W

CONFIDENTIAL AND PROPRIETARY TO ADVANCED MICRO DEVICES INC.
© 2013 Advanced Micro Devices
This AMD Board schematic and design is the exclusive property of AMD, and is provided only to entities under a non-disclosure agreement with AMD for evaluation purposes. Further distribution or disclosure is strictly prohibited. Use of this schematic and design for any purpose other than evaluation requires a Board Technology License Agreement with AMD. AMD makes no representations or warranties of any kind regarding this schematic and design, including, not limited to, any implied warranty of merchantability or fitness for a particular purpose, and disclaims responsibility for any consequences resulting from use of the information included herein.

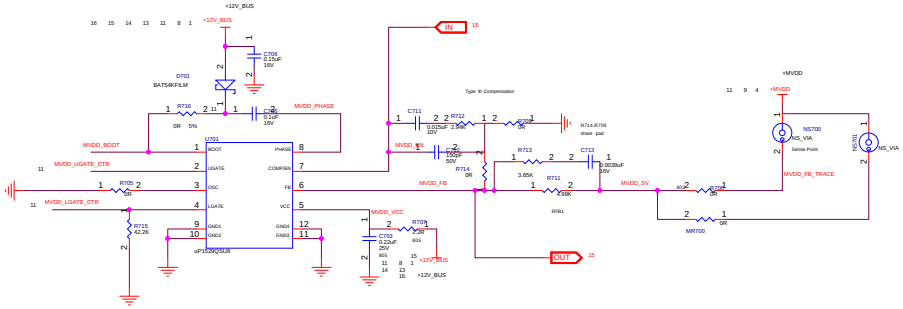

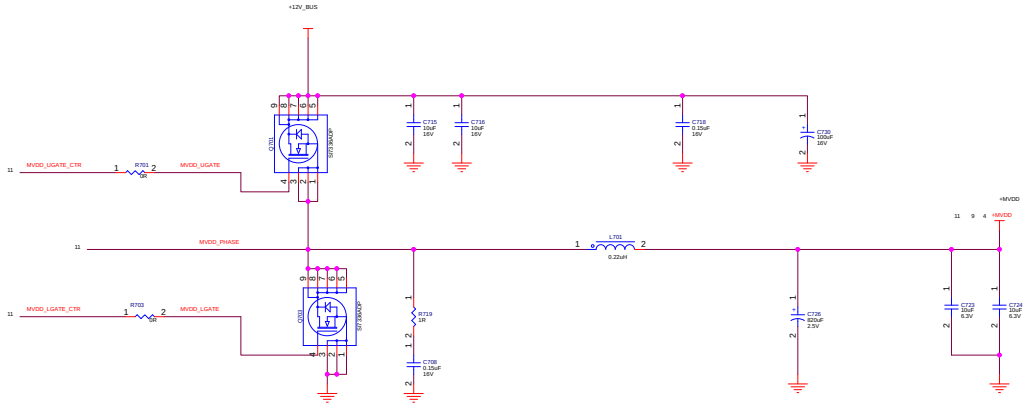

<ADDR1> <ADDR2> <ADDR3>	CONFIDENTIAL AND PROPRIETARY TO ADVANCED MICRO DEVICES INC. <COPYRIGHT> Advanced Micro Devices This AMD Board schematic and design is the exclusive property of AMD, and is provided only to entities under a non-disclosure agreement with AMD for evaluation purposes. Further distribution or disclosure is strictly prohibited. Use of this schematic and design for any purpose other than evaluation requires a Board Technology License Agreement with AMD. AMD makes no representations or warranties of any kind regarding this schematic and design, including, not limited to, any implied warranty of merchantability or fitness for a particular purpose, and disclaims responsibility for any consequences resulting from use of the information included herein.
SHEET: SHEET TITLE	
DATE: <CON_LAST_MODIFIED> REV: <REV>	
SHEET NUMBER: 11 OF 20	TITLE: <TITLE>
DOCUMENT NUMBER: <SCHEMATIC_NUMBER>	
NOTES: NOTE	

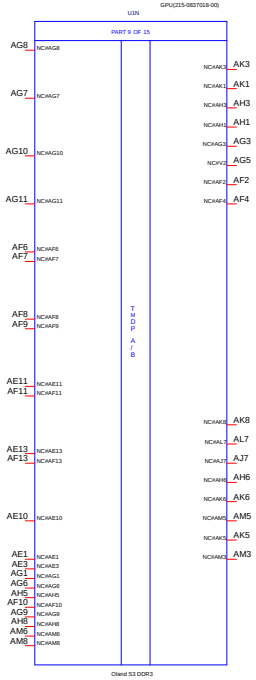

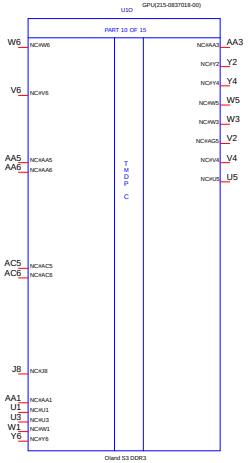

AMD - GRAPHICS 1 COMMERCE VALLEY MARKHAM, ONTARIO, L3T 7X6	CONFIDENTIAL AND PROPRIETARY TO ADVANCED MICRO DEVICES INC. © 2013 Advanced Micro Devices This AMD Board schematic and design is the exclusive property of AMD, and is provided only to entities under a non-disclosure agreement with AMD for evaluation purposes. Further distribution or disclosure is strictly prohibited. Use of this schematic and design for any purpose other than evaluation requires a Board Technology License Agreement with AMD. AMD makes no representations or warranties of any kind regarding this schematic and design, including, not limited to, any implied warranty of merchantability or fitness for a particular purpose, and disclaims responsibility for any consequences resulting from use of the information included herein.
SHEET: Oland Unused Modules	
DATE: Tue Dec 17 08:14:18 2013	REV: 1.0
SHEET NUMBER: 13 OF 22	TITLE: Oland Pro S3 DDR3 DVI+HDMI/DP+VGA 25W
DOCUMENT NUMBER: 105-C748cx-00A	
NOTES: NOTE	

Power Management - Power Gating and Dynamic Voltage Control

POWER SEQUENCE
+1.8V-2.8ms->MVDD-3.4ms->0.95V-4.3ms->VDDC

0.95V must ramp up before VDDC

Don't support BACO
Support CTF(Internal)

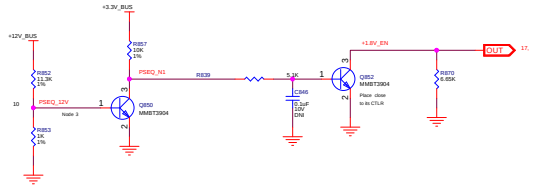

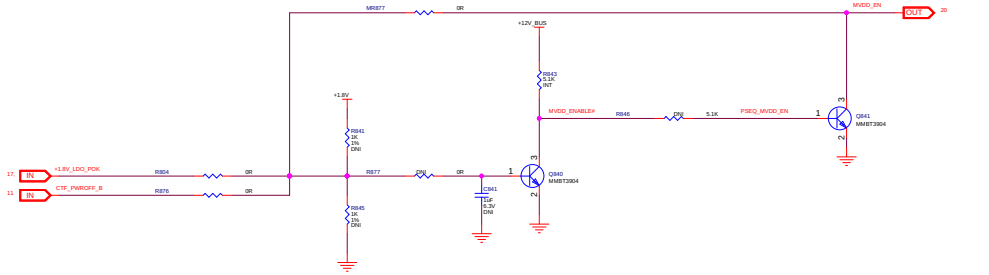

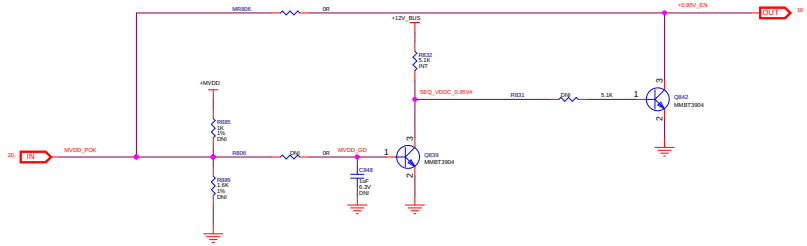

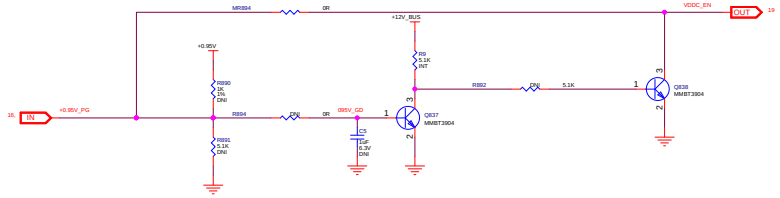

VDDC Low Side Divider

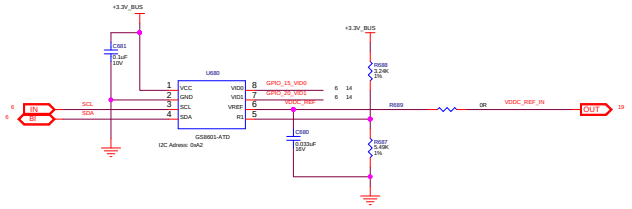

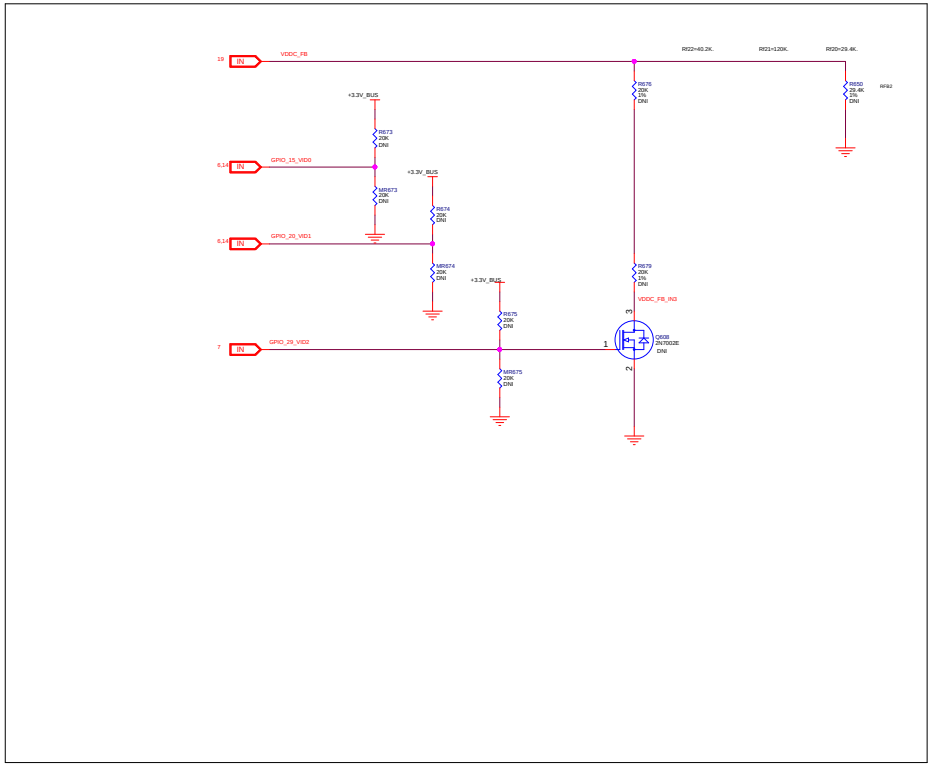

AMD - GRAPHICS 1 COMMERCE VALLEY MARKHAM, ONTARIO, L3T 7X6	
SHEET: PWR SEQ	
DATE: Tue Dec 17 08:14:18 2013	REV: 1.0
SHEET NUMBER: 14 OF 22	
DOCUMENT NUMBER: 105-C748xx-00A	

CONFIDENTIAL AND PROPRIETARY TO ADVANCED MICRO DEVICES INC.

© 2013 Advanced Micro Devices

This AMD Board schematic and design is the exclusive property of AMD, and is provided only to entities under a non-disclosure agreement with AMD for evaluation purposes. Further distribution or disclosure is strictly prohibited. Use of this schematic and design for any purpose other than evaluation requires a Board Technology License Agreement with AMD. AMD makes no representations or warranties of any kind regarding this schematic and design, including, not limited to, any implied warranty of merchantability or fitness for a particular purpose, and disclaims responsibility for any consequences resulting from use of the information included herein.

TITLE: Oland Pro S3 DDR3 DVI+HDMI/DP+VGA 25W

MEM

SUB BOM

SUBBOM(13B-00731)
ALT(13B-00732)
256Mx16 1.5V 900MHz
HYNIX(13B-00731)MICRON(13B-00732)

VDDC

SUB BOM

SUBBOM(13A-01405)

TOL: +/-3%

MVDD

SUB BOM

SUBBOM(13A-01406)

TOL: +/-3%

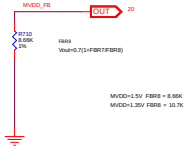

MVDD=1.5V FBR8 = 8.66K
MVDD=1.35V FBR8 = 10.7K

LDO +0.95V/+1.8V

SUB BOM

SUBBOM(13A-01394)

TOL: +/-3%

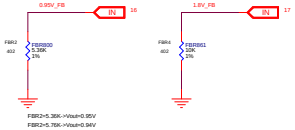

FBR2=5.36K->Vout=0.95V
FBR2=5.76K->Vout=0.94V

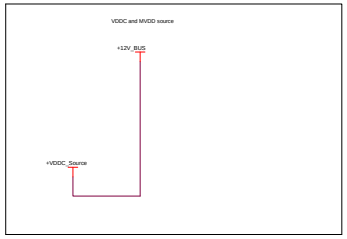

AMD - GRAPHICS 1 COMMERCE VALLEY MARKHAM, ONTARIO, L3T 7X6	
SHEET: Sub BOM	
DATE: Tue Dec 17 08:14:18 2013	REV: 1.0
SHEET NUMBER: 15 OF 22	
DOCUMENT NUMBER: 105-C748cx-00A	
NOTES: NOTE	

CONFIDENTIAL AND PROPRIETARY TO ADVANCED MICRO DEVICES INC.

© 2013 Advanced Micro Devices

This AMD Board schematic and design is the exclusive property of AMD, and is provided only to entities under a non-disclosure agreement with AMD for evaluation purposes. Further distribution or disclosure is strictly prohibited. Use of this schematic and design for any purpose other than evaluation requires a Board Technology License Agreement with AMD. AMD makes no representations or warranties of any kind regarding this schematic and design, including, not limited to, any implied warranty of merchantability or fitness for a particular purpose, and disclaims responsibility for any consequences resulting from use of the information included herein.

TITLE:

Oland Pro S3 DDR3 DVI+HDMI/DP+VGA 25W

Linear Regulators

LDO #1: Vin = +1.5V +/-2% Vout = +0.95V +/- 2%; Iout = 1.44A (TBV) RMS MAX

PCB: 50 to 70mm sq. copper area for cooling

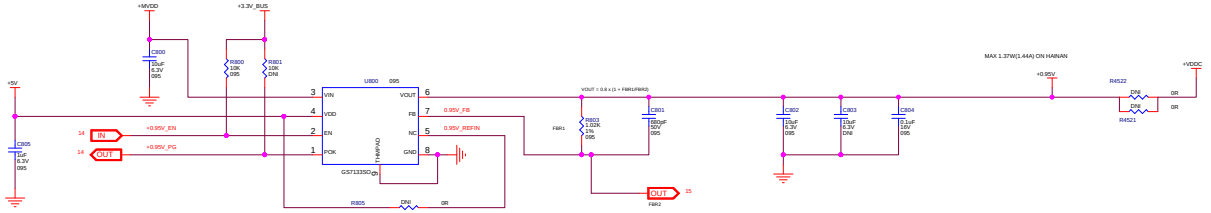

$CDS_IMAGE(clipboard_3.jpg[4028|3181

AMD - GRAPHICS 1 COMMERCE VALLEY MARKHAM, ONTARIO, L3T 7X6	CONFIDENTIAL AND PROPRIETARY TO ADVANCED MICRO DEVICES INC. © 2013 Advanced Micro Devices This AMD Board schematic and design is the exclusive property of AMD, and is provided only to entities under a non-disclosure agreement with AMD for evaluation purposes. Further distribution or disclosure is strictly prohibited. Use of this schematic and design for any purpose other than evaluation requires a Board Technology License Agreement with AMD. AMD makes no representations or warranties of any kind regarding this schematic and design, including, not limited to, any implied warranty of merchantability or fitness for a particular purpose, and disclaims responsibility for any consequences resulting from use of the information included herein.
SHEET: 0.95V	
DATE: Tue Dec 17 08:14:18 2013 REV: 1.0	
SHEET NUMBER: 16 OF 22	TITLE: Oland Pro S3 DDR3 DVI+HDMI/DP+VGA 25W
DOCUMENT NUMBER: 105-C748xx-00A	
NOTES: NOTE	

Linear Regulators

LDO #2: Vin = 3.00V to 3.60V (3.3V +/- 9%) Vout = +1.8V +/- 2%; Iout = 1.6A (TBV) RMS MAX

PCB: 50 to 70mm sq. copper area for cooling

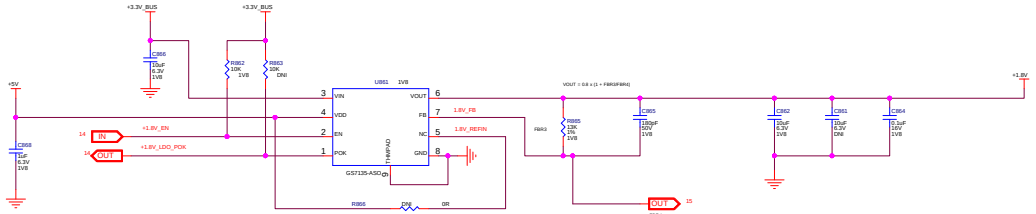

$CDS_IMAGE{clipboard_2.jpg|4028|3181}

AMD - GRAPHICS 1 COMMERCE VALLEY MARKHAM, ONTARIO, L3T 7X6	
SHEET: 1.8V	
DATE: Tue Dec 17 08:14:19 2013	REV: 1.0
SHEET NUMBER: 17 OF 22	
DOCUMENT NUMBER: 105-C748xx-00A	

CONFIDENTIAL AND PROPRIETARY TO ADVANCED MICRO DEVICES INC.

© 2013 Advanced Micro Devices

This AMD Board schematic and design is the exclusive property of AMD, and is provided only to entities under a non-disclosure agreement with AMD for evaluation purposes. Further distribution or disclosure is strictly prohibited. Use of this schematic and design for any purpose other than evaluation requires a Board Technology License Agreement with AMD. AMD makes no representations or warranties of any kind regarding this schematic and design, including, not limited to, any implied warranty of merchantability or fitness for a particular purpose, and disclaims responsibility for any consequences resulting from use of the information included herein.

TITLE: Oland Pro S3 DDR3 DVI+HDMI/DP+VGA 25W

+5V Power

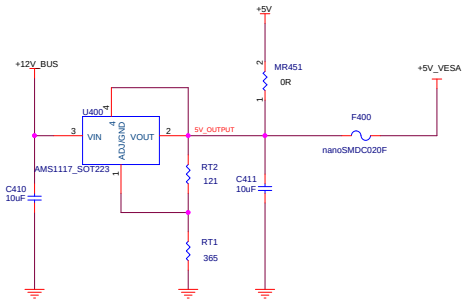

Vout=1.25V* [1+(RT1/RT2)]

AMD - GRAPHICS 1 COMMERCE VALLEY MARKHAM, ONTARIO, L3T 7X6	
SHEET: 5V	
DATE: Tue Dec 17 08:14:19 2013	REV: 1.0
SHEET NUMBER: 18 OF 22	
DOCUMENT NUMBER: 105-C748cx-00A	
NOTES: NOTE	

CONFIDENTIAL AND PROPRIETARY TO ADVANCED MICRO DEVICES INC.

© 2013 Advanced Micro Devices

This AMD Board schematic and design is the exclusive property of AMD, and is provided only to entities under a non-disclosure agreement with AMD for evaluation purposes. Further distribution or disclosure is strictly prohibited. Use of this schematic and design for any purpose other than evaluation requires a Board Technology License Agreement with AMD. AMD makes no representations or warranties of any kind regarding this schematic and design, including, not limited to, any implied warranty of merchantability or fitness for a particular purpose, and disclaims responsibility for any consequences resulting from use of the information included herein.

TITLE: Oland Pro S3 DDR3 DVI+HDMI/DP+VGA 25W

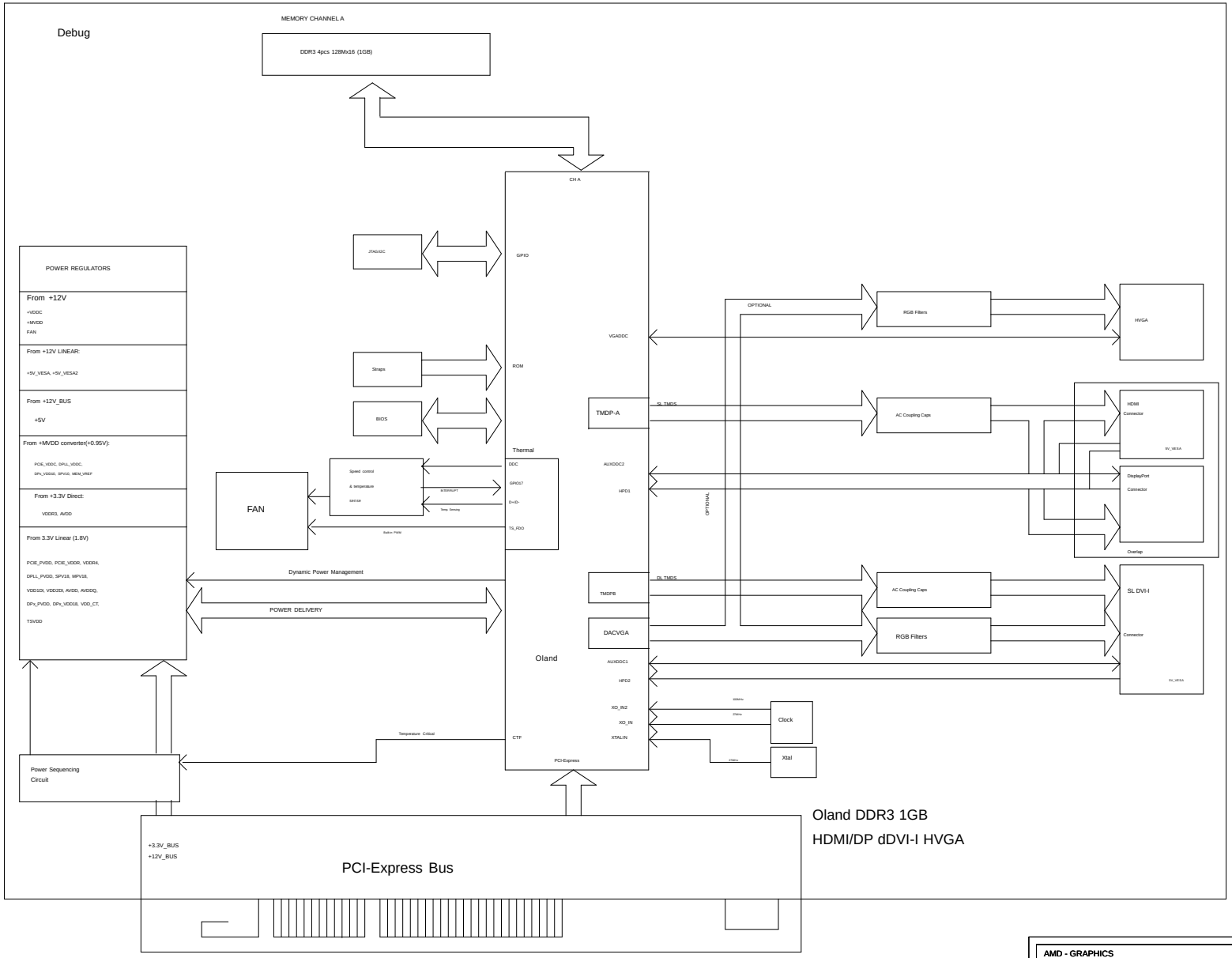

AMD - GRAPHICS 1 COMMERCE VALLEY MARKHAM, ONTARIO, L3T 7X6	
SHEET: Diagram	
DATE: Tue Dec 17 08:14:19 2013	REV: 1.0
SHEET NUMBER: 21 OF 22	
DOCUMENT NUMBER: 105-C748cx-00A	

CONFIDENTIAL AND PROPRIETARY TO ADVANCED MICRO DEVICES INC.

© 2013 Advanced Micro Devices

This AMD Board schematic and design is the exclusive property of AMD, and is provided only to entities under a non-disclosure agreement with AMD for evaluation purposes. Further distribution or disclosure is strictly prohibited. Use of this schematic and design for any purpose other than evaluation requires a Board Technology License Agreement with AMD. AMD makes no representations or warranties of any kind regarding this schematic and design, including, not limited to, any implied warranty of merchantability or fitness for a particular purpose, and disclaims responsibility for any consequences resulting from use of the information included herein.

TITLE: Oland Pro S3 DDR3 DVI+HDMI/DP+VGA 25W

AMD

TITLE: Oland Pro S3 DDR3 DVI+HDMI/DP+VGA 25W

DOCUMENT NUMBER: 105-C748xx-00A

DATE: Tue Dec 17 08:14:20 2013

SHEET NUMBER: 22 OF 22

REV: 1.0

REVISION HISTORY

ENGINEER: Tony Yang

NOTES: NOTE

CONFIDENTIAL AND PROPRIETARY TO ADVANCED MICRO DEVICES INC.
© 2013 Advanced Micro Devices
This AMD Board schematic and design is the exclusive property of AMD, and is provided only to entities under a non-disclosure agreement with AMD for evaluation purposes. Further distribution or disclosure is strictly prohibited. Use of this schematic and design for any purpose other than evaluation requires a Board Technology License Agreement with AMD. AMD makes no representations or warranties of any kind regarding this schematic and design, including, not limited to, any implied warranty of merchantability or fitness for a particular purpose, and disclaims responsibility for any consequences resulting from use of the information included herein.

AMD - GRAPHICS
1 COMMERCE VALLEY
MARKHAM, ONTARIO, L3T 7X6

SCH Rev	PCB Rev	Date	REVISION DESCRIPTON
1.00	00A	10/15/13	1. Initial release