Block Diagram

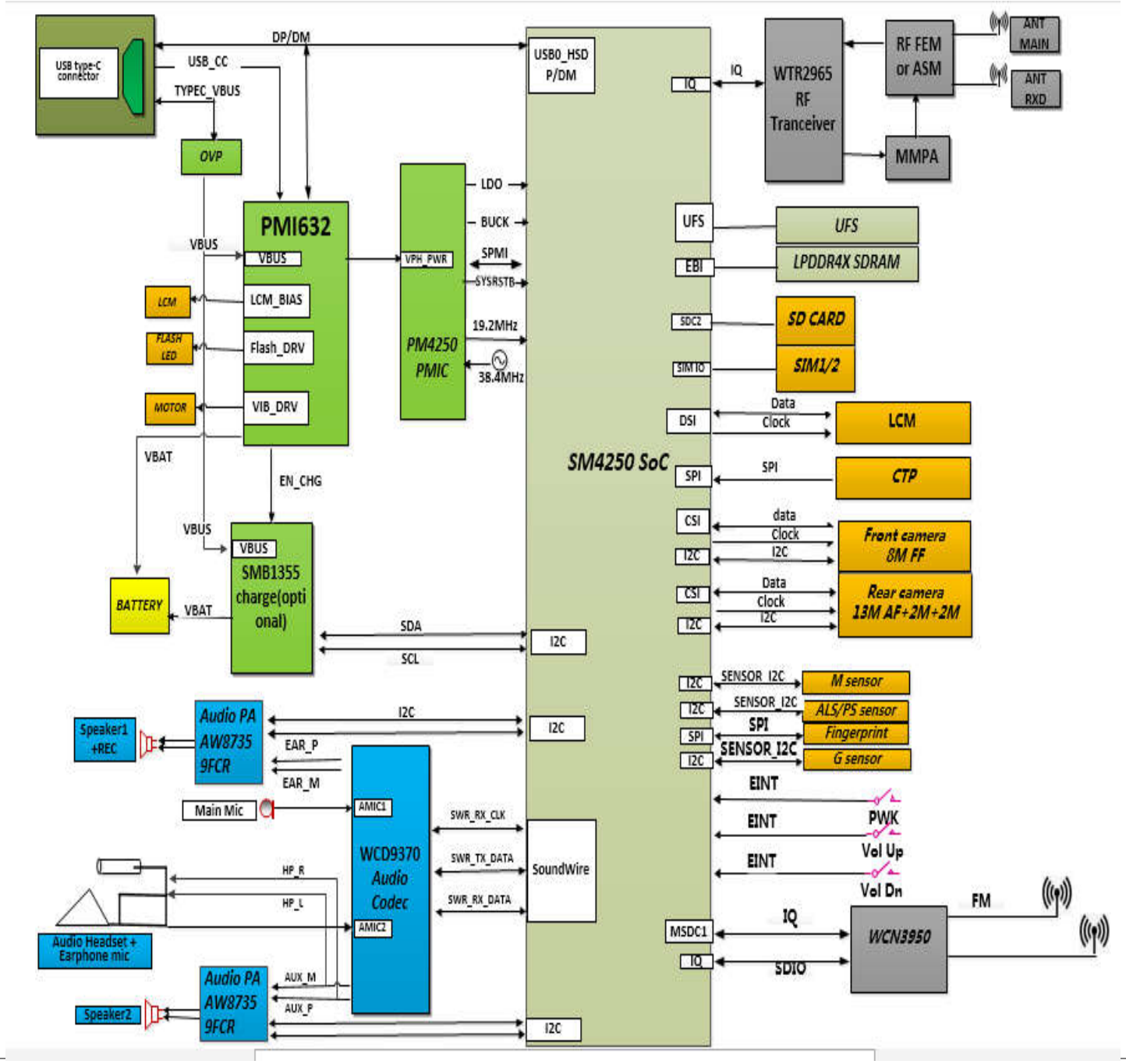

I2C Configuration Table

GPIO4 GPIO5	NFC/PM8008/SMB1355　I2C
GPIO22 GPIO23	SUB_CAM_I2C（虚化）
GPIO29 GPIO30	MAIN/FRONT/微距_CAM_I2C
GPIO96 GPIO97	SPK_PA　I2C
GPIO109 GPIO110	PL Sensor　I2C
LPI_GPIO21 LPI_GPIO22	G/M Sensor　I2C

Company: Huaqin		
Block Title	I2C Configuration Table	
Project T10_I-Shape_SM8115_MB_V1	Rev 1.0	
Date: Tuesday, June 30, 2020	Sheet 2 of 39	

Table of Content

Sheet	Content	Sheet	Content
01.	Block Diagram	24.	AUDIO_SPK PA
02.	I2C Configuration Table	25.	GP_MIC_REV
03.	Table of Content	26.	SENSORS_MOTOR
04.	GPIO MAP	27.	LCD_TP_BL
05.	SM4250 Control/UFS/SDC1/SDC2	28.	REAR&FRONT CAM/pm8008
06.	SM4250 LPDDR4X	29.	Fingerprint
07.	SM4250 CSI/DSI	30.	BTB_CONN_OVP
08.	SM4250 GPIO (Internal Codec)	31.	RF_WTR3925_Pin_Out
09.	SM4250 Power (Core)	32.	RF_WTR3925_RF_TX
10.	SM4250 Power (Other, LP4X)	33:	RF_WTR3925_RF_PRX
11.	SM4250 Ground	34:	RF_WTR3925_RF_DRX
12.	PM4250 CLKs/Control_GND	35:	RF_WIFI_BT_GPS
13.	PM4250 Buck Converter1	36:	RF_WCN3950
14.	PM4250 Buck Converter2	37:	RF_NFC
15.	PM4250 LDO	38:	QET
16.	SMB1355	39:	Test Points
17.	SD_SIM		
18.	PMI632 CHARGING_BATCON		
19	PMI632 Control/Display/GPIO		
20.	uFS		
21.	AUXADC_Thermal		
22.	Audio_CODEC WCD9370		
23.	Key PAD		

Company: Hasqin	
Block Title	Table of Content
Project T10_I-Shape_SM8115_MB_V1	Rev 1.0
Date: Tuesday, June 30, 2020	Sheet 3 of 39

GPIO MAP — SM4250 GPIO Configuration

GPIO_0	NFC_SPI_MISO	GPIO_42		GPIO_84	
GPIO_1	NFC_SPI_MOSI	GPIO_43	GRFC_6	GPIO_85	LCM_RST
GPIO_2	NFC_SPI_CLK	GPIO_44	GRFC_7	GPIO_86	**NFC_CLK_REQ**
GPIO_3	NFC_SPI_CS1_N	GPIO_45	GRFC_8	GPIO_87	**WCN_SW_CTRL**
GPIO_4	APPS_I2C_SDA	GPIO_46	GRFC_9	GPIO_88	SD_DET
GPIO_5	APPS_I2C_SCL	GPIO_47	GRFC_10	GPIO_89	Modem_ID3
GPIO_6	TP_SPI_MISO	GPIO_48		GPIO_90	MSS_LTE_COXM_TXD
GPIO_7	TP_SPI_MOSI	GPIO_49	GRFC_12	GPIO_91	MSS_LTE_COXM_RXD
GPIO_8	WCN_UART_CTS_N	GPIO_50		GPIO_92	**WCD9370_RST_N**
GPIO_9	WCN_UART_RFR_N	GPIO_51		GPIO_93	**FP_POWER_EN**
GPIO_10	WCN_UART_TX_N	GPIO_52		GPIO_94	**FORCED_USB_BOOT_POL_SEL**
GPIO_11	WCN_UART_RX_N	GPIO_53	RFFE1_DATA	GPIO_95	**FORCED_USB_BOOT**
GPIO_12	MSM_UART_TX	GPIO_54	RFFE1_CLK	GPIO_96	**PA_I2C_SDA**
GPIO_13	MSM_UART_RX	GPIO_55		GPIO_97	**PA_I2C_SCL**
GPIO_14	FP_SPI_MISO	GPIO_56		GPIO_98	**PA_SPK_RST**
GPIO_15	FP_SPI_MOSI	GPIO_57	RFFE3_DATA	GPIO_99	**LCD_ID0**
GPIO_16	FP_SPI_CLK	GPIO_58	RFFE3_CLK	GPIO_100	**LCD_ID1**
GPIO_17	FP_SPI_CS_N	GPIO_59		GPIO_101	**LCD_ID2**
GPIO_18	CAM_3_PDN	GPIO_60		GPIO_102	**USB_SS_SEL**
GPIO_19	CAM_F_RST	GPIO_61		GPIO_103	**CTP_RST**
GPIO_20	CAM_R_MCLK	GPIO_62	RFFE5_DATA	GPIO_104	**CTP_EINT**
GPIO_21	CAM_F_MCLK	GPIO_63	RFFE5_CLK	GPIO_105	**SMB_STAT**
GPIO_22	CAM_I2C_SDA0	GPIO_64	EXT_GPS_LNA_EN0	GPIO_106	**ALS_EINT**
GPIO_23	CAM_I2C_SCL0	GPIO_65	CH0_GSM_TX_PHASE_D0	GPIO_107	**PA_RSV_RST**
GPIO_24	CAM_2_RST	GPIO_66	CAM_R_RST	GPIO_108	**DSI_TE**
GPIO_25	PM8008_INT_N	GPIO_67	NC	GPIO_109	**Sensor_I2C_SDA**
GPIO_26	PM8008_RST_N	GPIO_68	Modem_ID1	GPIO_110	**Sensor_I2C_SCL**
GPIO_27	CAM_MCLK_2	GPIO_69	SUB_ID	GPIO_111	**CONFIG0**
GPIO_28	CAM_MCLK_3	GPIO_70	NFC_ENABLE	GPIO_112	**CONFIG1**
GPIO_29	CAM_I2C_SDA1	GPIO_71	NFC_INT_N	LPI_GPIO_0	SWR_TX_CLK
GPIO_30	CAM_I2C_SCL1	GPIO_72	TP_SPI_SCLK	LPI_GPIO_1	SWR_TX_DATA0
GPIO_31	NFC_DWL_REQ	GPIO_73	UIM2_DATA	LPI_GPIO_2	SWR_TX_DATA1
GPIO_32	FP_ID1	GPIO_74	UIM2_CLK	LPI_GPIO_3	SWR_RX_CLK
GPIO_33	FP_ID2	GPIO_75	UIM2_RESET	LPI_GPIO_4	SWR_RX_DATA0
GPIO_34	FP_EINT	GPIO_76	UIM2_DET	LPI_GPIO_5	SWR_RX_DATA1
GPIO_35	FP_RST	GPIO_77	UIM1_DATA	LPI_GPIO_14	QCA_SB_CLK
GPIO_36	G_EINT_ACC	GPIO_78	UIM1_CLK	LPI_GPIO_15	QCA_SB_DATA
GPIO_37	GRFC_0	GPIO_79	UIM1_RESET	LPI_GPIO_21	Sensor_I3C_SDA
GPIO_38	GRFC_1	GPIO_80	**UIM1_DET**	LPI_GPIO_22	Sensor_I3C_SCL
GPIO_39	GRFC_2	GPIO_81	**TP_SPI_CS_N**	LPI_GPIO_25	
GPIO_40	ANT_TEST	GPIO_82	Modem_ID2	LPI_GPIO_26	
GPIO_41		GPIO_83	Modem_ID4		

PM4250 GPIO Configuration

GPIO_1	DSP_CLK	GPIO_8	USB_MOS_CTRL
GPIO_2	FLASH_THERMAL	GPIO_9	
GPIO_3	USB1_THERM		
GPIO_4	USB2_THERM		
GPIO_5	KEY_VOL_UP		
GPIO_6	BB_THERM		
GPIO_7	Modem_ID5		

PMI632 GPIO Configuration

GPIO_1	NC	GPIO_8	ISNS_SMB_M
GPIO_2	STAT_CHG		
GPIO_3	PMI632_THERM		
GPIO_4			
GPIO_5			
GPIO_6			
GPIO_7	ISNS_SMB_P		

Company: Huaqin	
Block Title: GPIO MAP	
Project: T10_I-Shape_SM8115_MB_V1	Rev: 1.0
Date: Tuesday, June 30, 2020	Sheet 4 of 39

SM6125 Control/UFS/SDC1/SDC2

80-PJ285-41 Rev. A

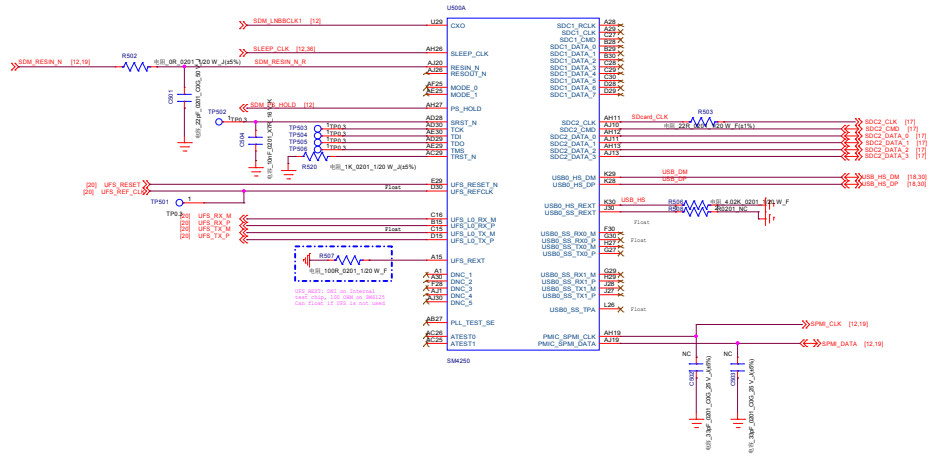

Company: Huaqin	
Block Title: SDM630 Control/UFS/SDC1/SDC2	
Project: T10_I-Shape_SM6115_MB_V1	Rev: 1.0
Date: Tuesday, June 30, 2020	Sheet 5 of 39

SM6125 LPDDR4

80-PJ285-41 Rev. A

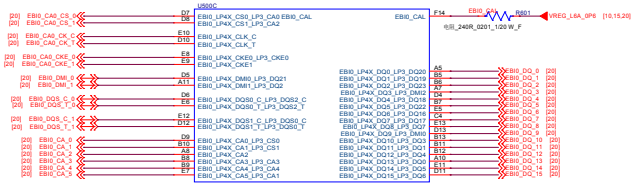

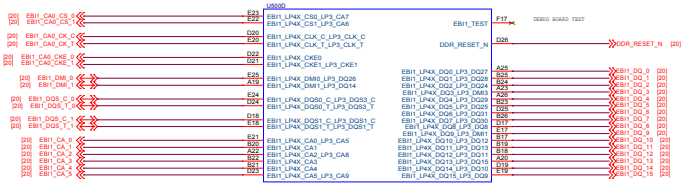

Company: Hasqin	
Block Title: SDM630 LPDDR4	
Project: T10_I-Shape_SM8115_MB_V1	Rev: 1.0
Date: Tuesday, June 30, 2020	Sheet: 8 of 39

SM6125 CSI/DSI

REF 701-799

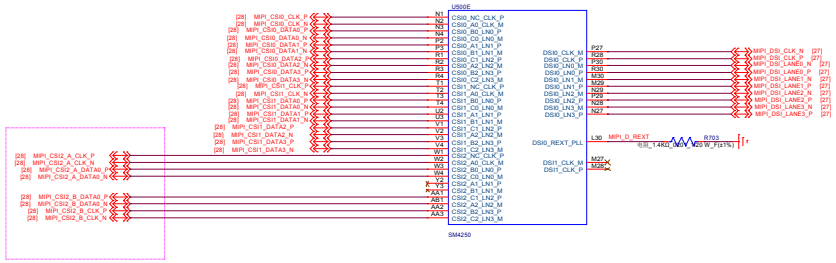

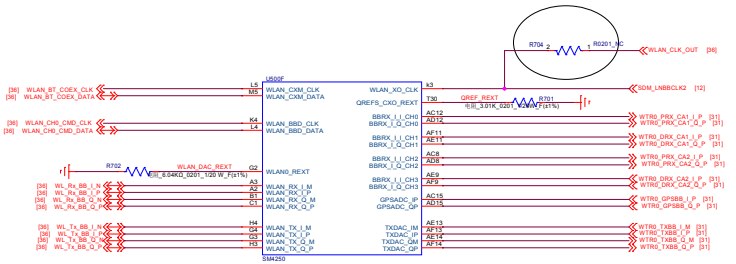

Company: Huaqin	
Block Title: SDM630 CSI/DSI	
Project: T10_I-Shape_SM6115_MB_V1	Rev: 1.0
Date: Tuesday, June 30, 2020	Sheet: 7 of 39

SM6125 GPIO (Internal Codec)

REF 801-899

BOOT Config GPIOs

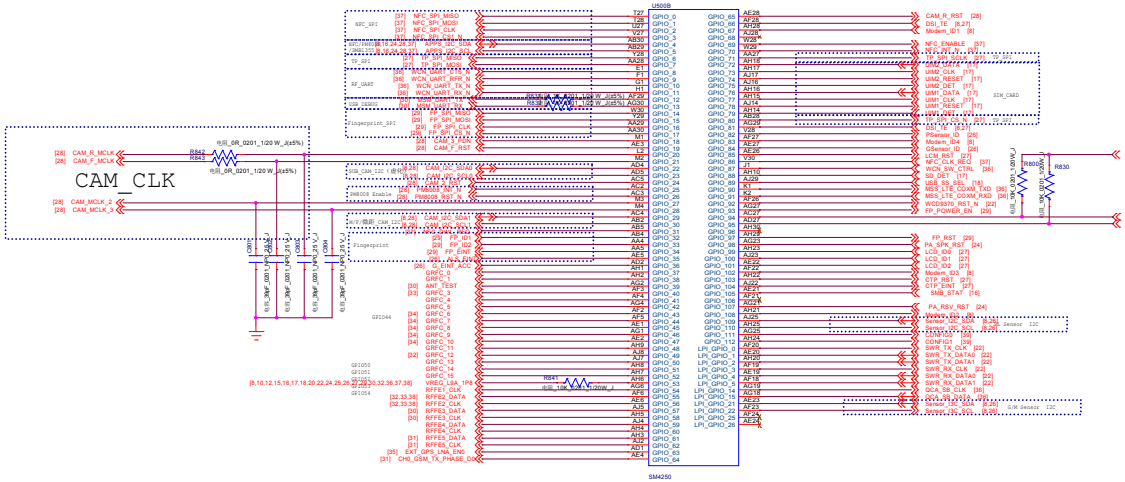

BOOT Config GPIOs	Functionality
GPIO_95	Forced_USB_BOOT
BOOT Config[0]:GPIO_48	WDOG_DISABLE
BOOT Config[1]:GPIO_50	FASTBOOT_SEL[0]
BOOT Config[2]:GPIO_51	FASTBOOT_SEL[1]
BOOT Config[3]:GPIO_53	FASTBOOT_SEL[2]
BOOT Config[4]:GPIO_55	FASTBOOT_SEL[3]
GPIO_94	Forced_USB_BOOT_POL_SEL

FASTBOOT_SEL[3:0]	BOOT OPTIONS
0b0000	0:Default(eMMC>SD>eDL(eDL path-USB only))
0b0001	1:SD>eMMC>eDL(eDL path-USB only))
0b0010	2:SD>eDL(eDL path-USB only)
0b0011	3:USB>eDL(eDL path-SD then USB)
0b0100	5:UFS HS G1>SD>eDL(eDL path-USB only))
0b0101	4:SD>UFS HS G1>eDL(eDL path-USB only))
0b1100	6:UFS HS G1>eDL(eDL path-USB only))
0b0111	7:eMMC>SD>eDL(eDL path-USB only))
0b1000	8:eMMC>eDL(eDL path-USB only))

I2C pull up

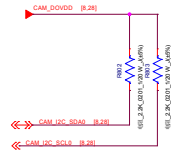

Camera0 I2C

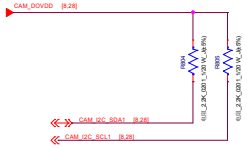

Camera1 I2C

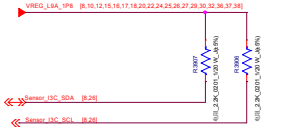

sensor I2C

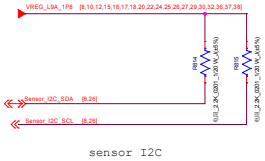

sensor I2C

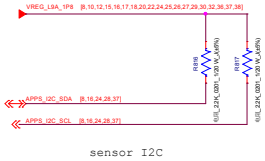

sensor I2C

Hardware ID

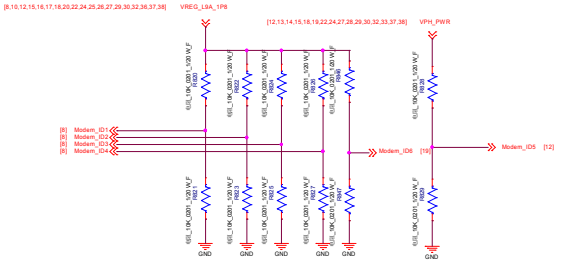

Company: Hasqin	
Block Title	SDM630 GPIO (Internal Codec)
Project	T18_I-Shape_SM6115_MBoard 1.0
Date: Tuesday, June 30, 2020	Sheet 8 of 39

SM6125 Power (Core)

REF 901-999

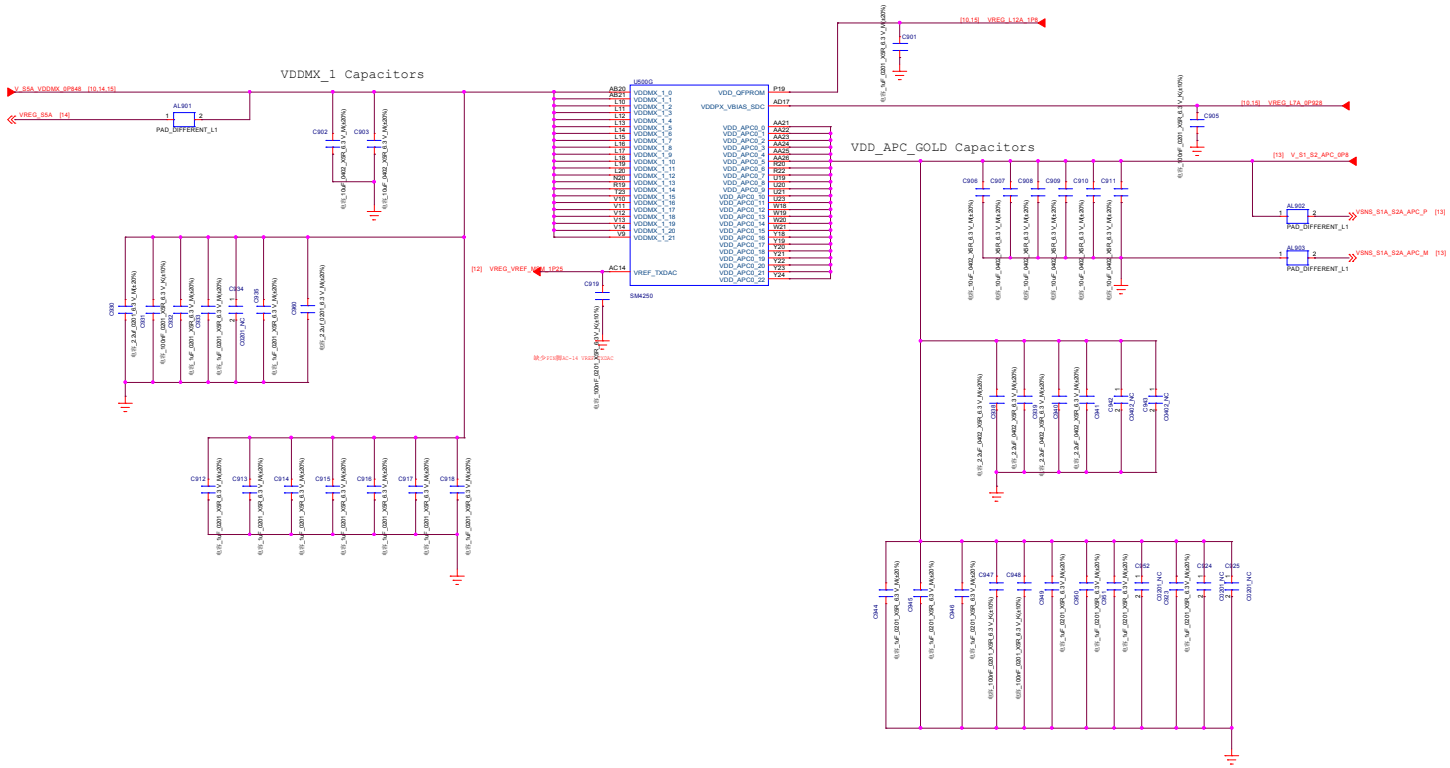

Company: Huaqin	
Block Title	SDM630 Power (Core)
Project	T10_I-Shape_SM6115_MB|V1 1.0
Date:	Tuesday, June 30, 2020 Sheet 9 of 39

SM6125 Power (Other, LP4X)

REF 1001-1099

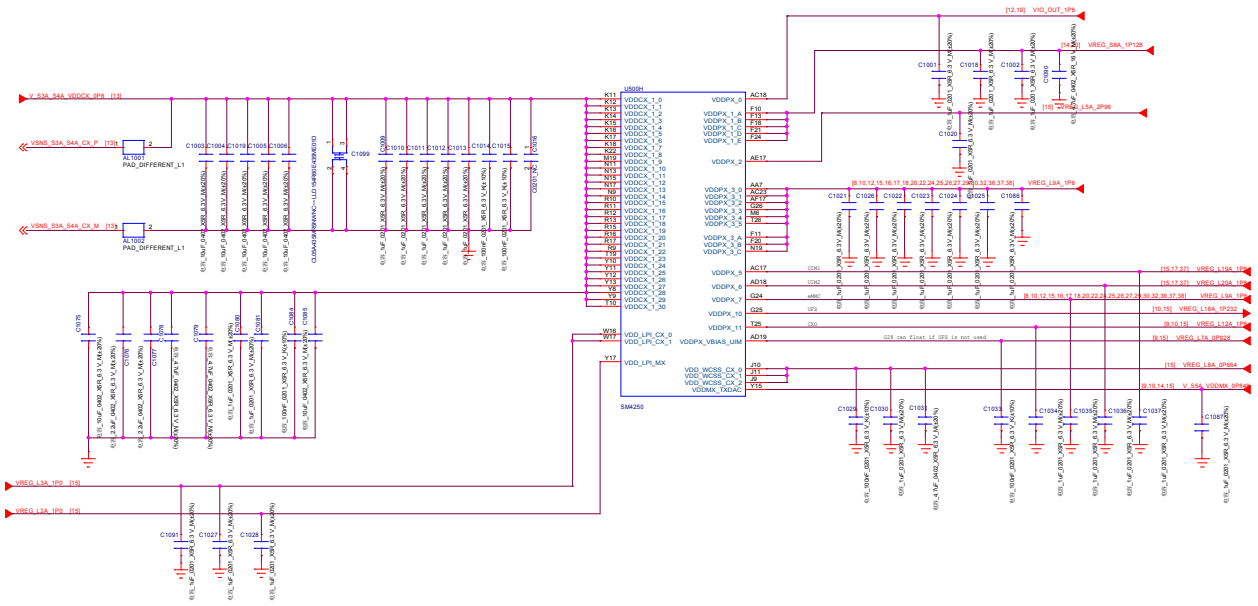

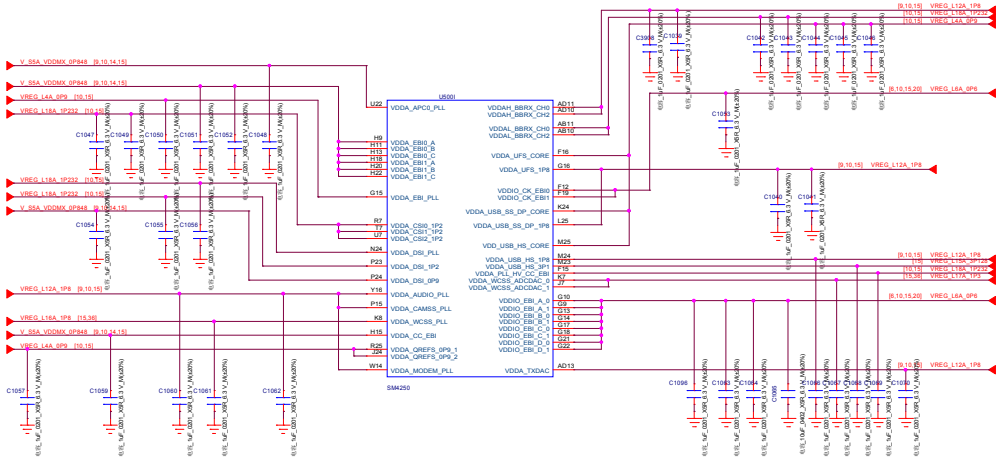

Company: Huaqin	
Block Title	SDM630 Power (Other, LP4X)
Project	T10_I-Shape_SM6115_MBoard1 1.0
Date: Tuesday, June 30, 2020	Sheet 10 of 39

SM6125 Ground

REF 1101-1199

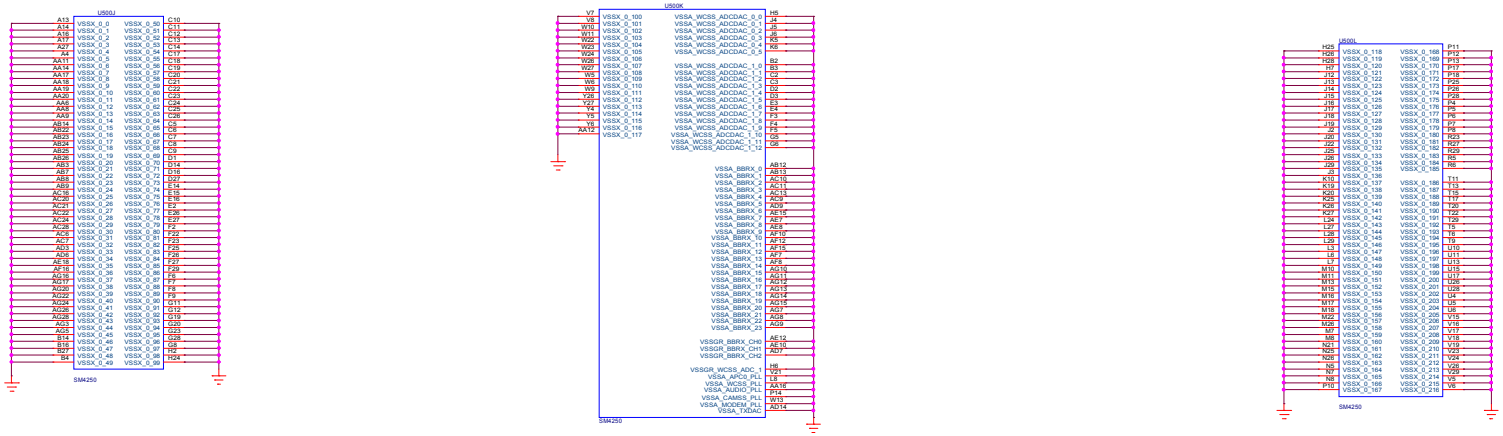

Company: Huaqin			
Block Title	SDM630 Ground		
Project	T10_I-Shape_SM6115_MB	Rev	1.0
Date:	Tuesday, June 30, 2020	Sheet 11 of 39	

PM6125 CLKs/Control_GND

REF 1201-1299

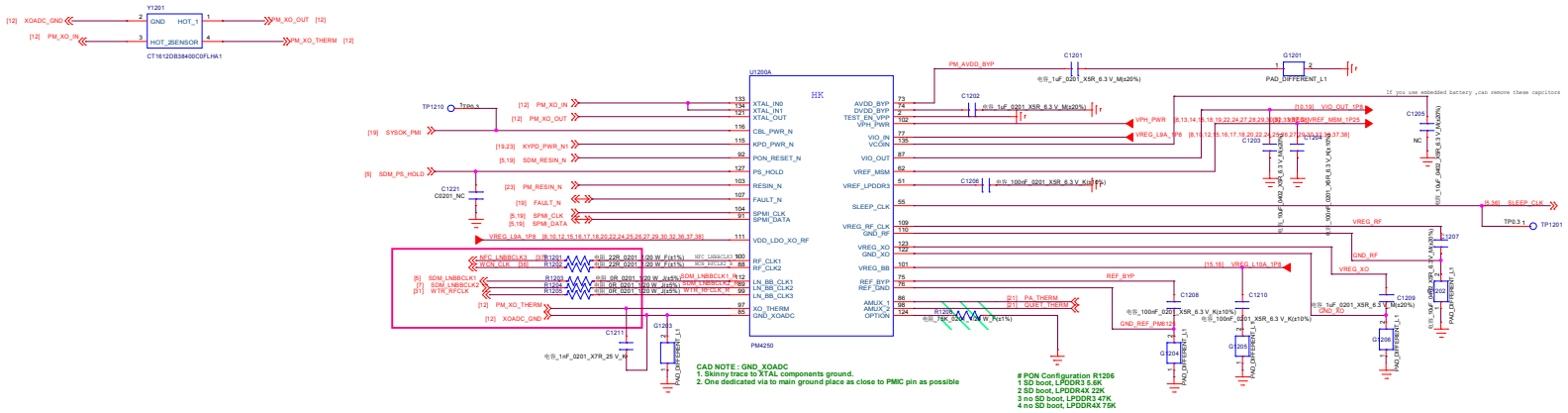

Option Pin Resistor Value	Configuration
5.6K	No External Boost Bypass, SD Card Boot, LPDDR3
22K	No External Boost Bypass, SD Card Boot, LPDDR4x
47K	No External Boost Bypass, No SD Card Boot, LPDDR3
75K	No External Boost Bypass, No SD Card Boot, LPDDR4x
130K	External Boost Bypass, SD Card Boot, LPDDR3
240K	External Boost Bypass, SD Card Boot, LPDDR4x
330K	External Boost Bypass, No SD Card Boot, LPDDR3
750K	External Boost Bypass, No SD Card Boot, LPDDR4x

Note: SD Card Boot implies the voltages for SD card will be enabled during Power On sequence
No SD Card Boot implies the voltages for SD card will be disabled during Power On sequence

Option Pin Resistor Value	Configuration
5.6K	No External Boost Bypass, SD Card Boot, LPDDR3
22K	No External Boost Bypass, SD Card Boot, LPDDR4x
47K	No External Boost Bypass, No SD Card Boot, LPDDR3
75K	No External Boost Bypass, No SD Card Boot, LPDDR4x
130K	External Boost Bypass, SD Card Boot, LPDDR3
240K	External Boost Bypass, SD Card Boot, LPDDR4x
330K	External Boost Bypass, No SD Card Boot, LPDDR3
750K	External Boost Bypass, No SD Card Boot, LPDDR4x

Note: SD Card Boot implies the voltages for SD card will be enabled during Power On sequence
No SD Card Boot implies the voltages for SD card will be disabled during Power On sequence

Company: Huaqin	
Block Title	PM660 CLKs/Control_GND
Project	T10_I-Shape_SM6115_MBoard 1.0
Date: Tuesday, June 30, 2020	Sheet 12 of 39

PM6125 Buck Converter

REF 1301-1399

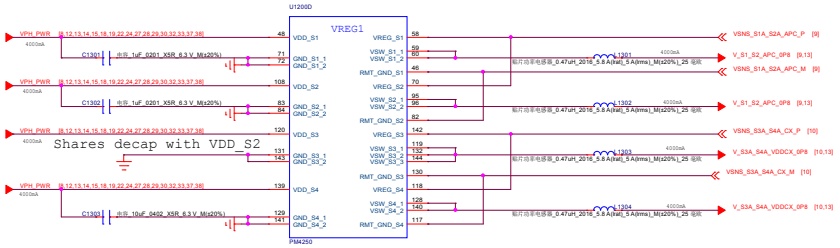

Nicobar Power Grid v1.31 10/31/2018

S1A-2A:	FTS510	0.8V default	8000mA Ipeak 8110.00mA	APC
S3A-4A:	FTS510	0.8V default	8000mA Ipeak 8480mA	CX, MODEM
S5A:	HFS510	0.912V default	4000mA Ipeak 3620.00mA	EBI, MX, nLDO
S6A:	HFS510	1.352V default	4000mA Ipeak 1560mA	LDO
S7A:	HFS510	2.04V default	2500mA Ipeak 2350mA	LDO
S8A:	FTS510	1.128V default	4000mA Ipeak 1790mA	LDO, LPDDR4x

Company: Hasqin	
Block Title	PM660 Buck Converter
Project	T18_I-Shape_SM8150_MBoard 1.0
Date: Tuesday, June 30, 2020	Sheet 13 of 39

PM6125 LDO Circuits

REF 1401-1499

Company: Huaqin	
Block Title	PM660 LDO Circuits
Project	T10_I-Shape_SM6115_MBoard 1.0
Date: Tuesday, June 30, 2020	Sheet 14 of 39

PM660 Charger_FG

REF 1501-1599

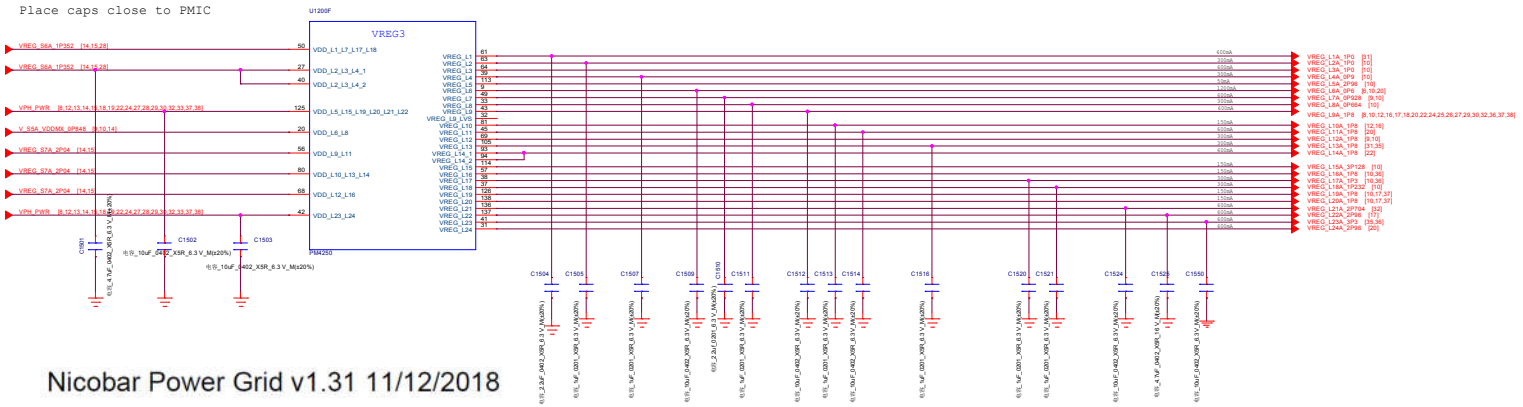

Nicobar Power Grid v1.31 11/12/2018

LDO	Type	Source	V_default (est)	Target Pin#
L1	N600	S6A	1.2V (625)	QLN,SDR 1,2 61
L2	N300	S8A	1V (320)	SDR VDD 1.0V 63
L3	N600	S8A	1V (370)	SDR VDD 1.0V 64
L4	N300	S8A	0.928V (126)	QLINK, EBI, MIPI 39
L5	MVP50	VPH	2.96V (22)	PX 113
L6	N1200	S5A	0.624V (1040)	VDDQ, EBI 9
L7	N600	S6A	0.928V (54.2)	USB 49
L8	N300	S5A	0.664V (81)	CX 33
L9	LVP600	S7A	1.8V (754)	Sensors, WCD, TMD, PMI_MSM, QET 43
L10	LVP150	S7A	1.8V (100)	QFPROM, USB,UFS, PX 81
L11	LVP600	S7A	1.8V (925)	EMMC/VCCQ 45
L12	LVP300	S7A	1.8V (121)	OV, USB_REDRIVER 69
L13	LVP300	S7A	1.8V (204)	QPM 1.8V, BBRX, GPS 105
L14	LVP600	S7A	1.8V (650)	WCD Buck 94,93
L15	MVP150	VPH	3.128V (5.28)	USB 3.1V, DP PHY 114
L16	LVP150	S7A	1.8V (92.5)	WCSS, WCN_XO 93
L17	N300	S6A	1.304V (246)	WCN, WCSS ADX DAC 38
L18	N300	S6A	1.232V (133)	MIPI, VDDPX 37
L19	MVP150	VPH/BB	1.8V (80.2)	Memory, SN100, PX 126
L20	MVP150	VPH/BB	1.8V (80.2)	Memory, SN100, PX 138
L21	MVP600	VPH/BB	2.704V (0.68)	QAT, DFE, RTC,QSW 136
L22	MVP600	VPH/BB	2.96V (800)	MMC 137
L23	MVP600	VPH/BB	3.304V (591)	WCN 3.3V 41
L24	MVP600	VPH/BB	2.96V (1170)	EMMC 31

LDO L5/L9/L10/L11/L12/L13/L14/L15/L16/L19/L20/L21/L22/L23/L24 is the Pseudo-capless LDO, so can dni CAP in BOM

PSEUDO CAPLESS LDOs
P-type are pseudo-capless, cap can be at load
For CAPLESS LDOs: if decaps on the load side do not
add up to LDO spec, then install the cap close to the PMIC

Company: Hasqin	
Block Title	PM660 Charger_FG
Project	T18_I-Shape_SM8150_MTP
Date: Tuesday, June 30, 2020	Sheet 15 of 39

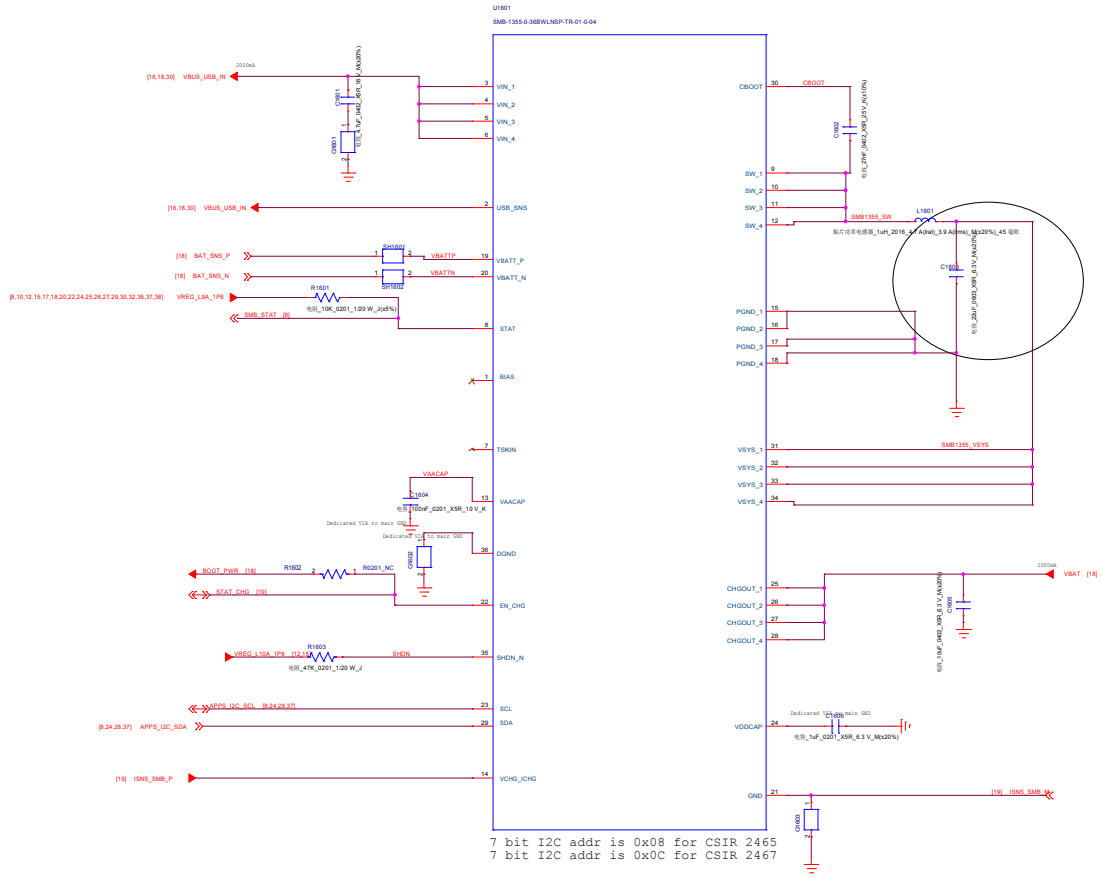

Company: Huaqin	
Block Title	PM660L Control and Bob_Flash
Project	T10_I-Shape_SM8150_MBoard 1.0
Date: Tuesday, June 30, 2020	Sheet 16 of 39

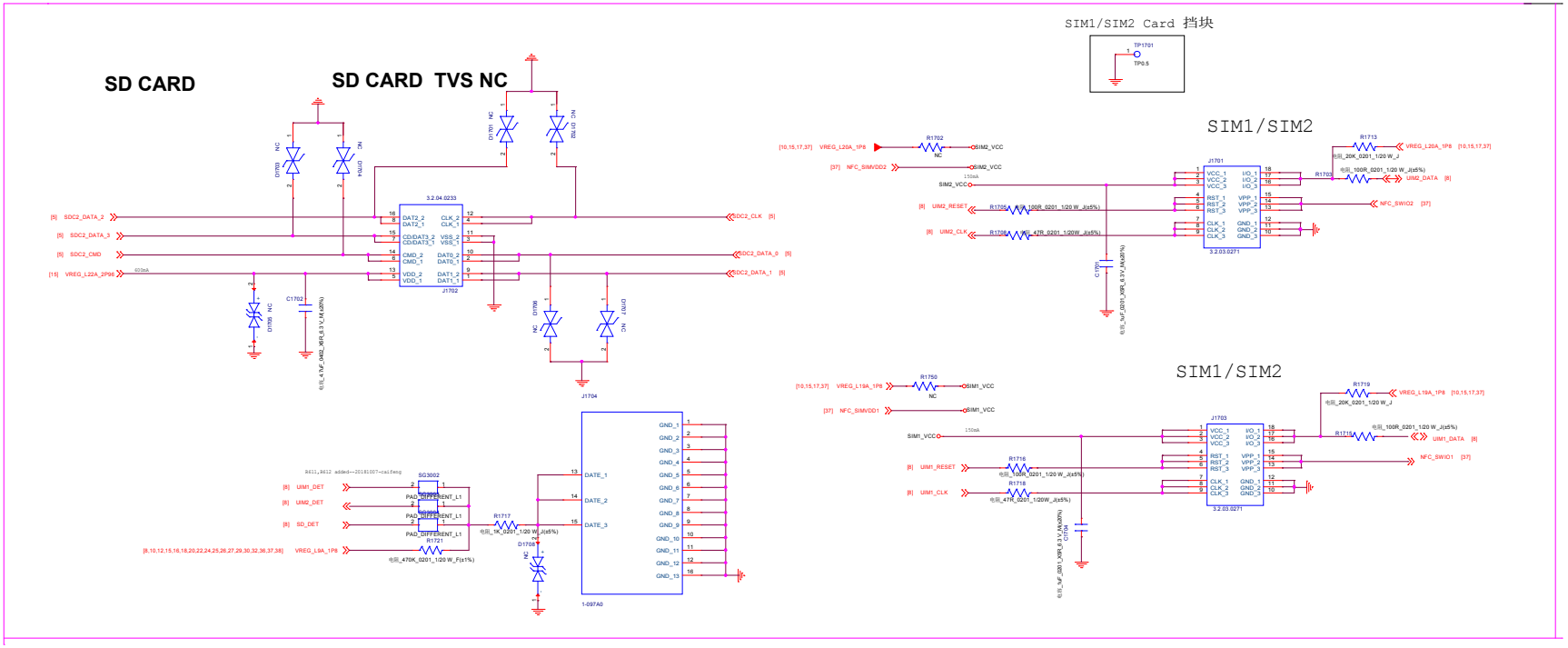

Schematic design notice of "46_MEMORY_SD Card" page.

Note 46-1: For better ESD performance, please select suitable components for system protection.

Company: Huaqin			
Block Title	PM660L Buck and LDO		
Project	T10_I-Shape_SM8115_MB	Rev	1.0
Date:	Tuesday, June 30, 2020	Sheet	17 of 39

PMI_PIN	connection on device without Hipower	connection on device with Hipower
CHG_OK	Pull up to VDD_CAP with 51kohm	Stark PMU CHG_OK
DIV2_EN	Pull down to GND with 0ohm	Stark PMU DIV2_EN
GPIO2	NC Connect For parallel charging: Connects to SMB EN pin. DO NOT pull up to VDD_CAP	100kOhm pull down to gnd For parallel charging: Connects to SMB EN pin. DO NOT pull up to VDD_CAP

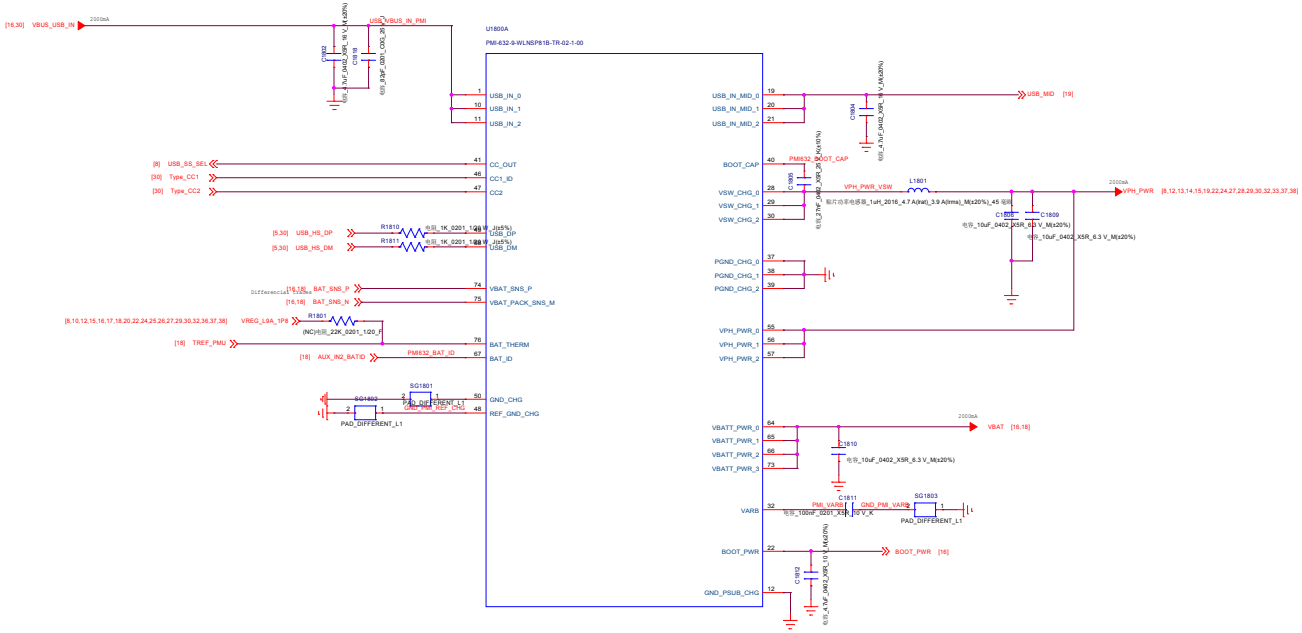

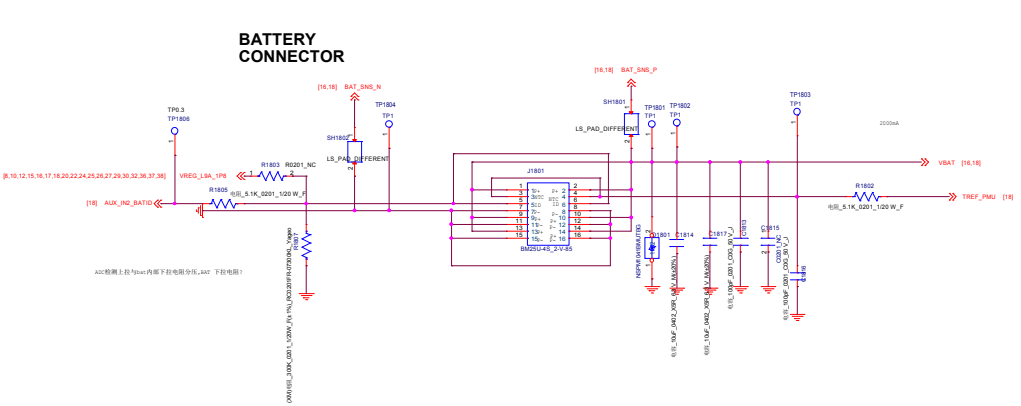

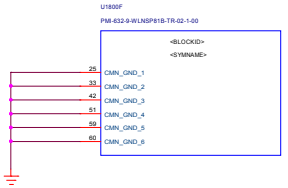

Schematic design notice of "26_POWER_SubPMIC-Charger + PP" page.

Note 26-1: For better ESD or surge performance we need choose suitable device for system protection. Please refer to [Surge device selection guide V2.0] provide by MTK.

PMI632 Charger

Company: Huaqin	
Block Title	PM660L CODEC
Project	T18_I-Shape_SM8150_MBoard 1.0
Date: Tuesday, June 30, 2020	Sheet 18 of 39

PMI632 Display

REF 80-PG427-41 Rev. B

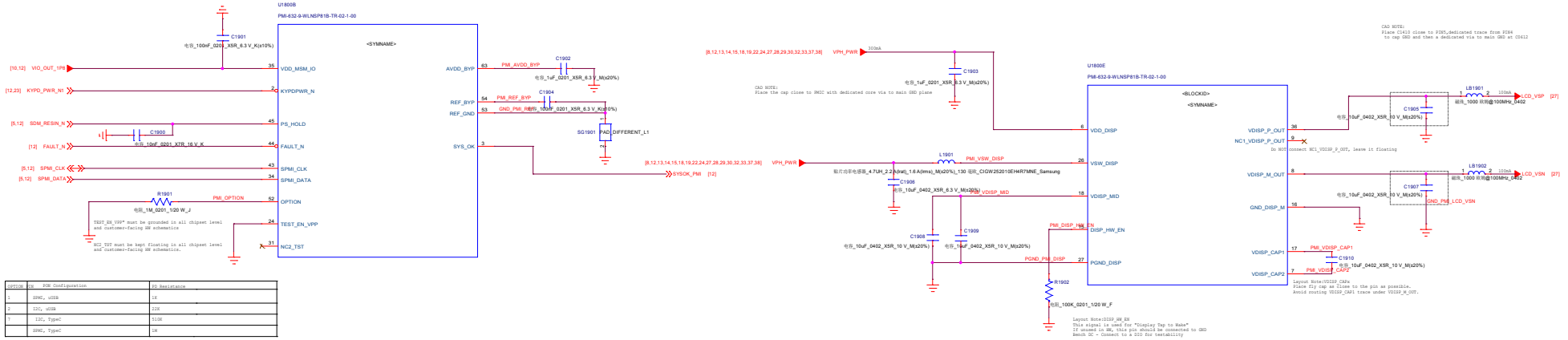

OPTION	ID	PON Configuration	PD Resistance
1		SPMI, uUSB	1M
2		I2C, uUSB	330K
3		I2C, TypeC	510K
		SPMI, TypeC	1M

Company: Huaqin	
Block Title	PM660L Display
Project	T10_I-Shape_SM8150_MBoard 1.0
Date: Tuesday, June 30, 2020	Sheet 19 of 39

UFS MEMORY

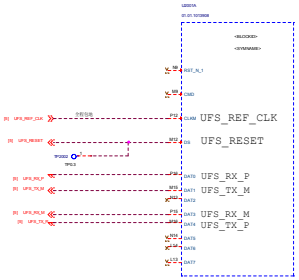

uMCP:LPDDR4x

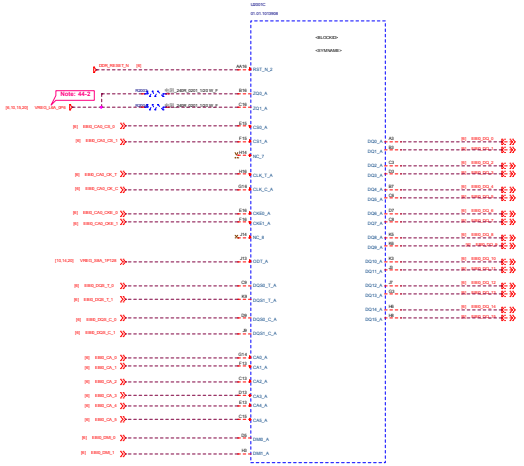

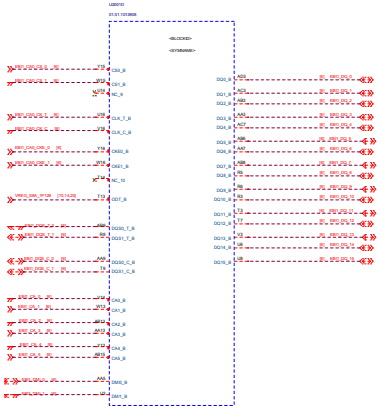

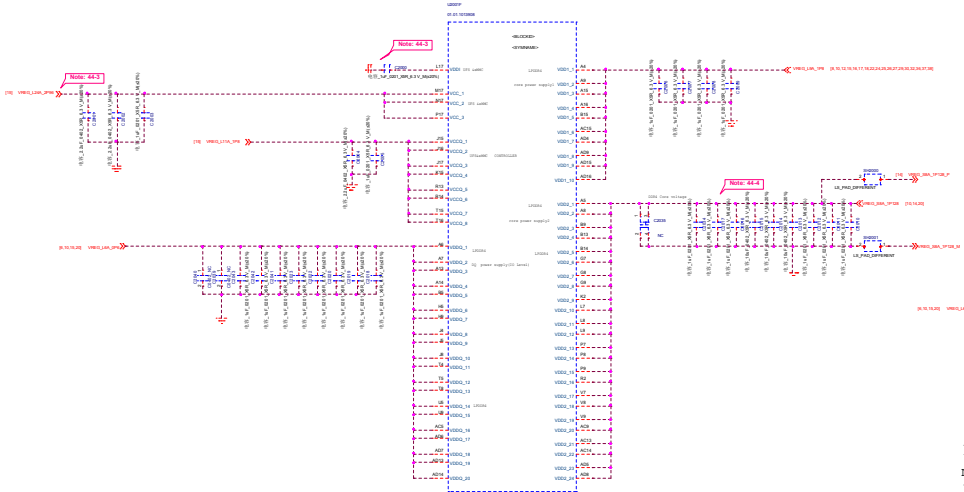

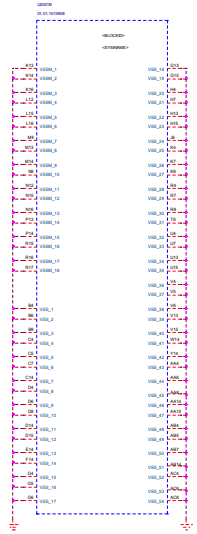

hynix是0.22uF，最大不超过1uF，
micron是1uF，
三星的不需要贴。
但是为了避免项目使用几家的uMCP时bom出错，统一贴1uF

4G PA_THERMAL

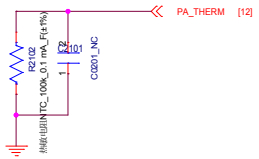

QUIET_THERM

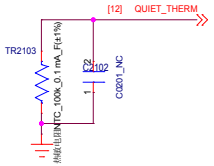

Charger_THERMAL

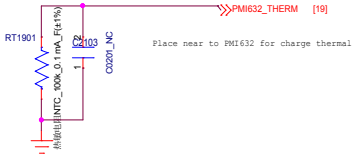

BB_THERMAL

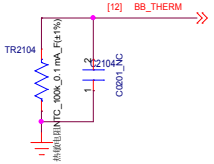

FLASH_THERMAL

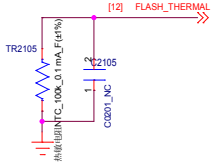

Company: Huaqin	
Block Title	30W CHARGE
Project	T10_I-Shape_SM6115_MBRW 1.0
Date: Tuesday, June 30, 2020	Sheet 21 of 39

WCD9370

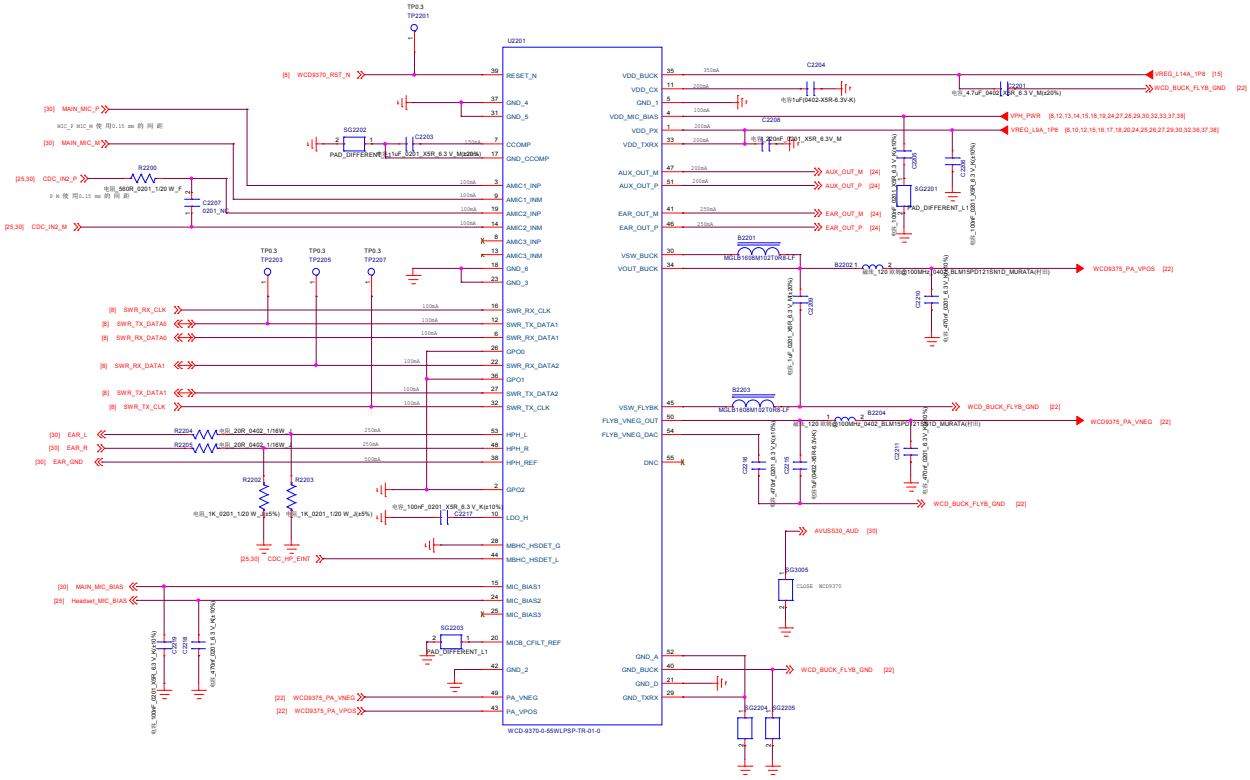

Company: Huaqin	
Block Title	Wipower
Project	T18_I-Shape_SM8150_MP_V1 1.0
Date: Tuesday, June 30, 2020	Sheet 22 of 39

Test Points

REF 2301-2399

Power Key => PWRKEY + GND
Volume Up => COL0 + GND (Download Key)
Volume Down => FCHR_ENB + GND

DO NOT put pull-up resistor on PWRKEY

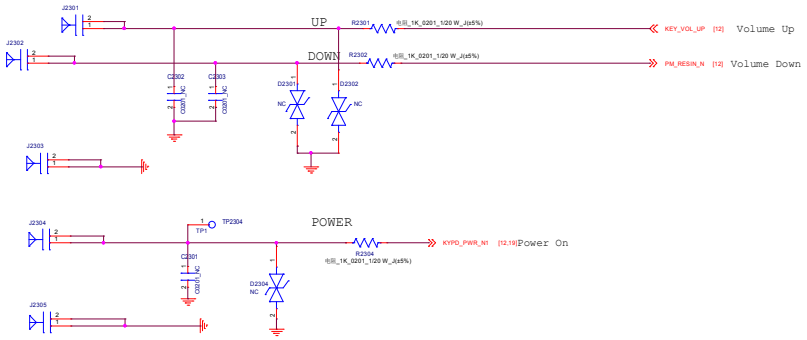

TP/GND/Shielding

Company: Hasqin	
Block Title	Test Points
Project	T18_I-Shape_SM8115_MB
Date: Tuesday, June 30, 2020	Sheet 23 of 39

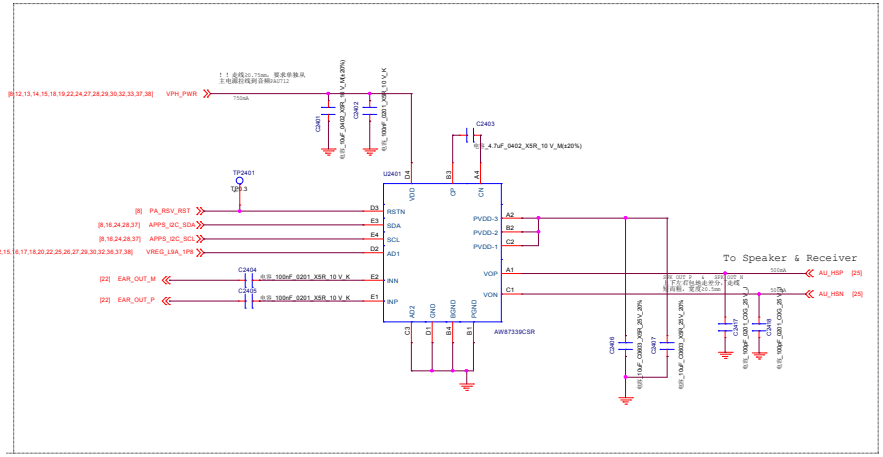

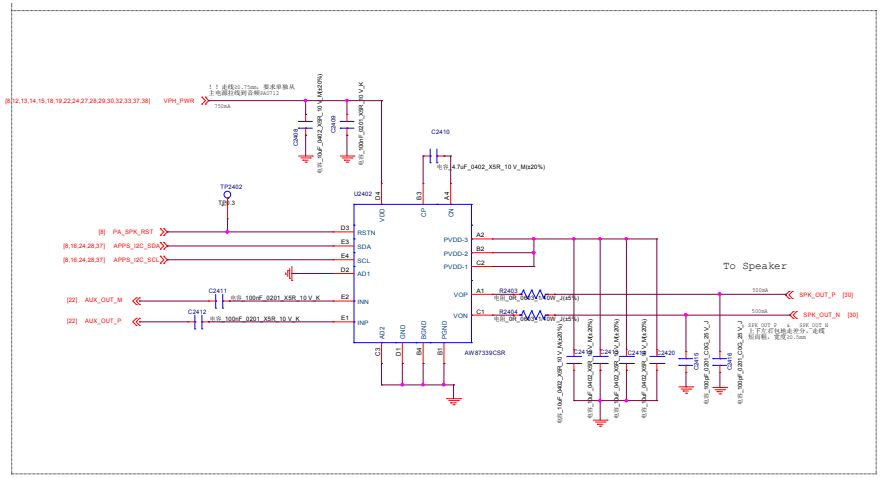

Company: Huaqin	
Block Title	AUDIO_MIC_RCV_SPK
Project	T10_I-Shape_SM8115_MBgW1 1.0
Date:	Tuesday, June 30, 2020 Sheet 24 of 39

Earphone Microphone

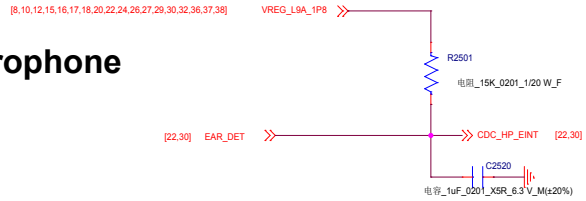

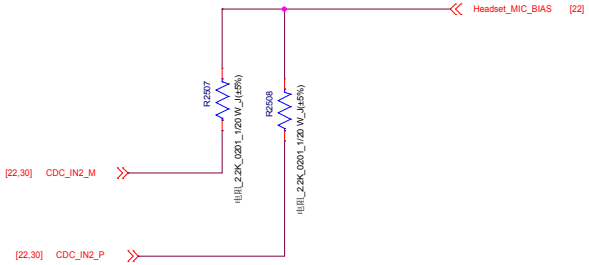

Receiver

close to RSV

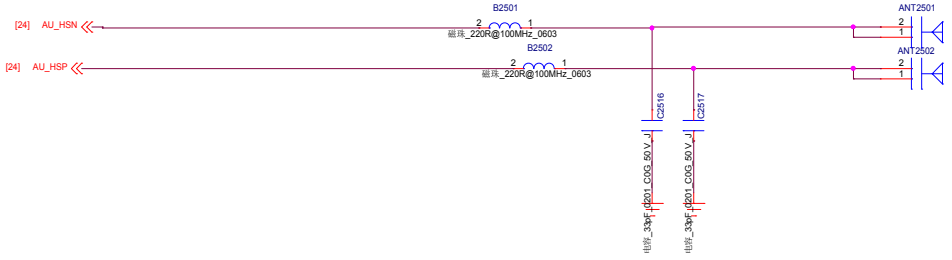

Company: Huaqin			
Block Title	AUDIO_HEADSET		
Project	T10_I-Shape_SM6115_MBRW	Rev	1.0
Date:	Tuesday, June 30, 2020	Sheet	25 of 39

单点下地

M-Sensor

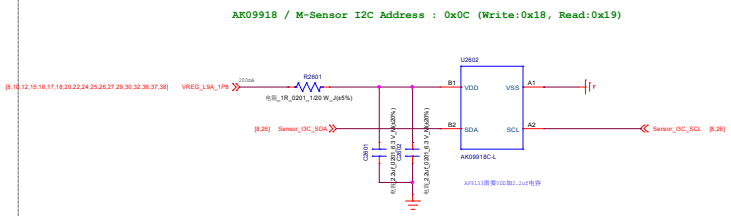

G Sensor

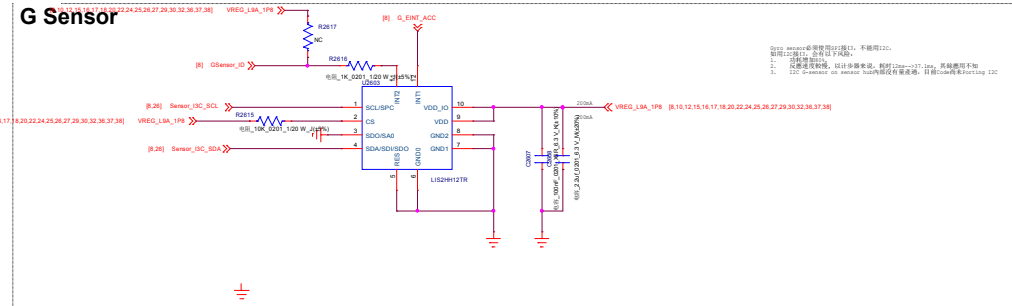

ALS SENSOR

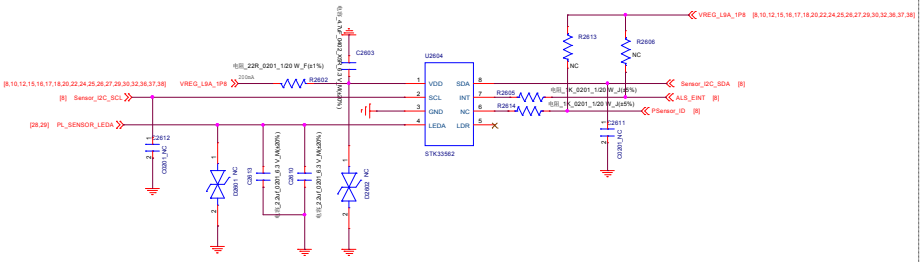

Company: Huaqin	
Block Title	SENSORS_MOTOR
Project	T10_I-Shape_SM8150_MP_V1 1.0
Date: Tuesday, June 30, 2020	Sheet 26 of 39

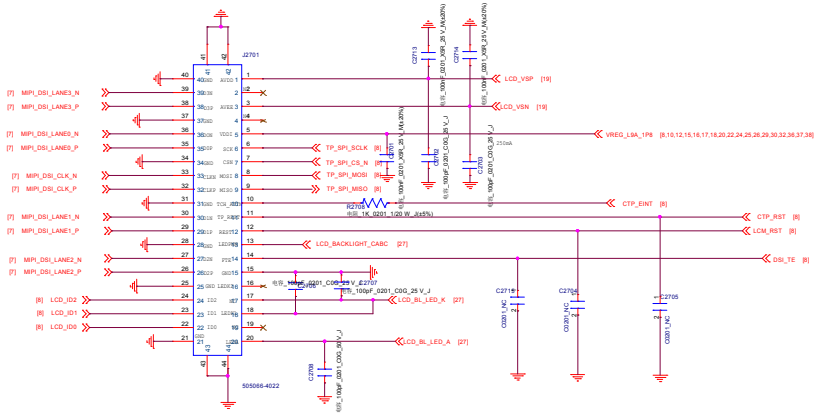

LCD-BACKLIGHT

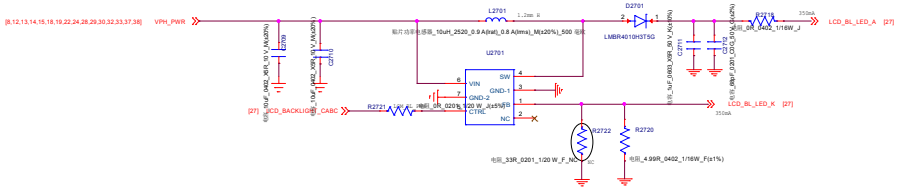

Company: Huaqin			
Block Title	LCD_TP		
Project	T10_I-Shape_SM8115_MBgA/1 1.0		
Date:	Tuesday, June 30, 2020	Sheet 27 of 39	

Rear Camera

注意：AGND AFGND都要单独下主地

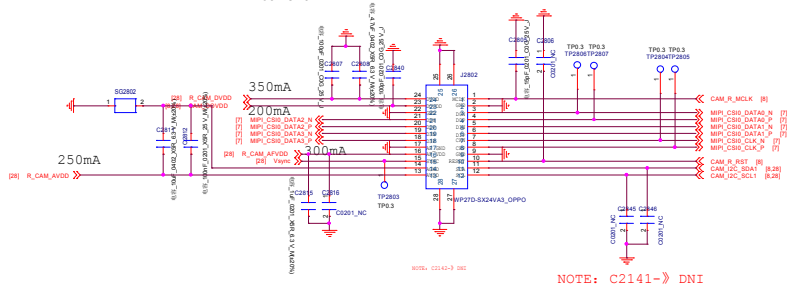

NOTE: C2141-》DNI

Front Camera - 8M

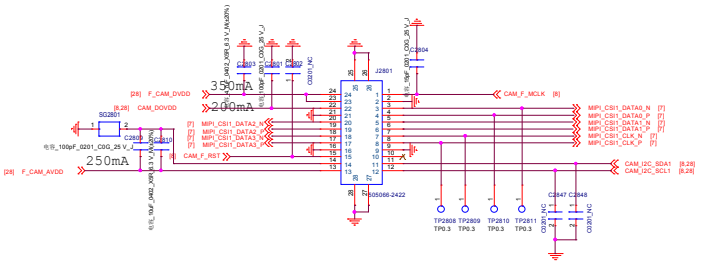

微距 Camera

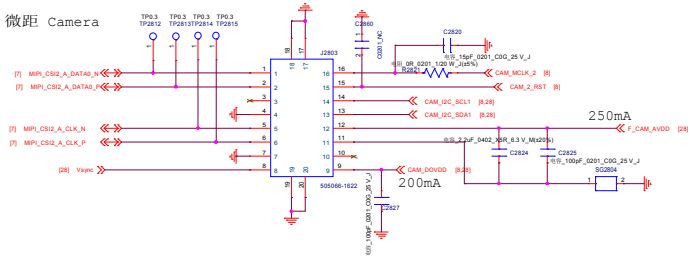

虚化 Camera

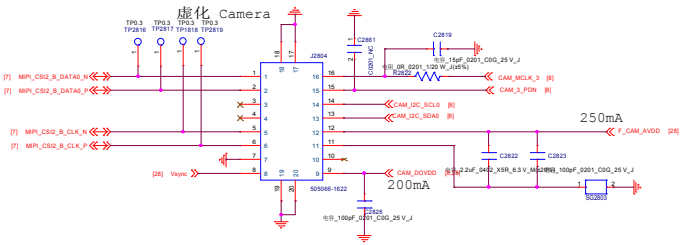

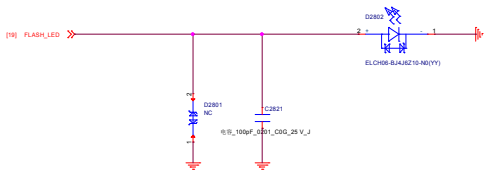

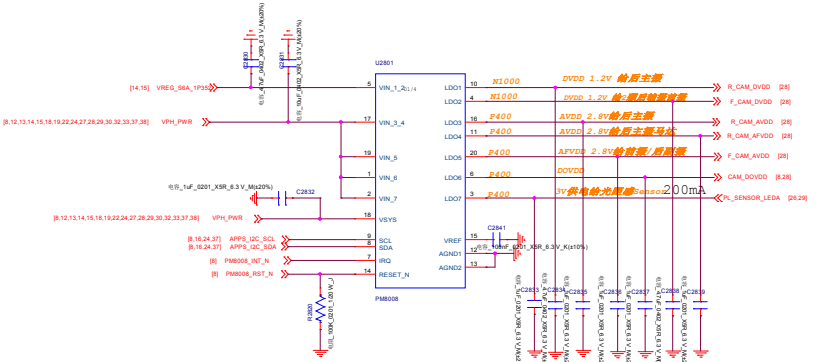

PM8008 I2C address: (Write:0x13, Read:0x12)

Company: Hoopin	
Block Title	REAR_CAM/FLASH
Project	T18_I-Shape_SM8115_MB
Rev	1.0
Date:	Tuesday, June 30, 2020
Sheet	28 of 39

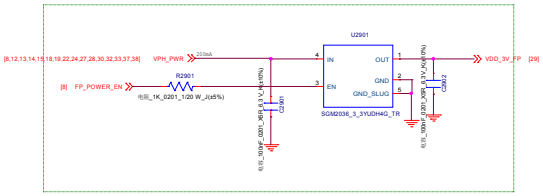

Fingerprint

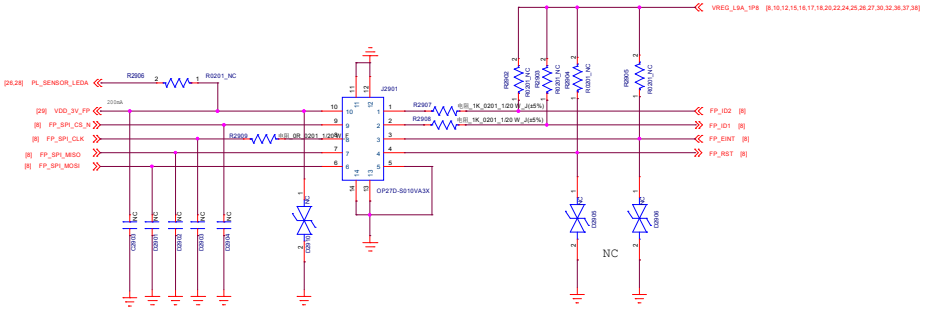

Title	Basin 10inch	
Size: D	Document Number: T10_I-Shape_SM8115_MB_V1	Rev: 1.0
Date:	Sheet 29 of 39	

Schematic design notice of "71_PERI_USB 2.0" page.

Note 71-1: For better ESD or surge performance we need choose suitable device for system protection. Please refer to [Surge device selection guide V2.0] provide by MTK.

BTB Connector

Grond protected separately each lane
90Ohm Differential impedance

Grond protected separately each lane
90Ohm Differential impedance

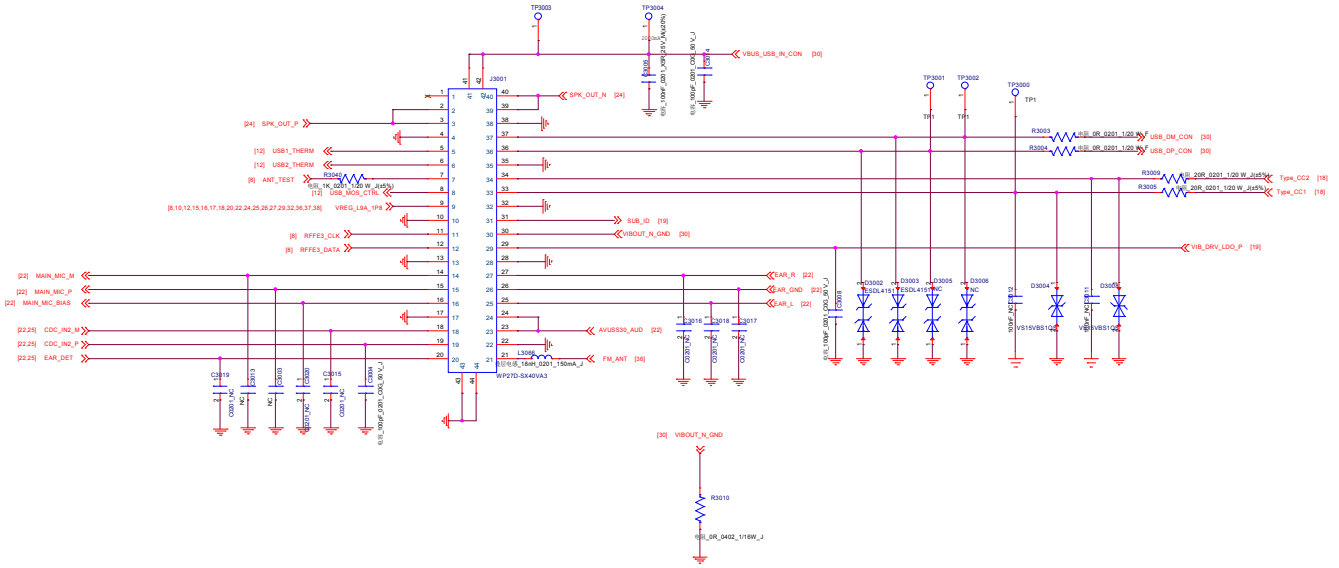

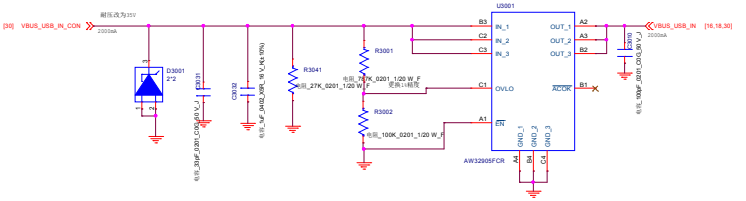

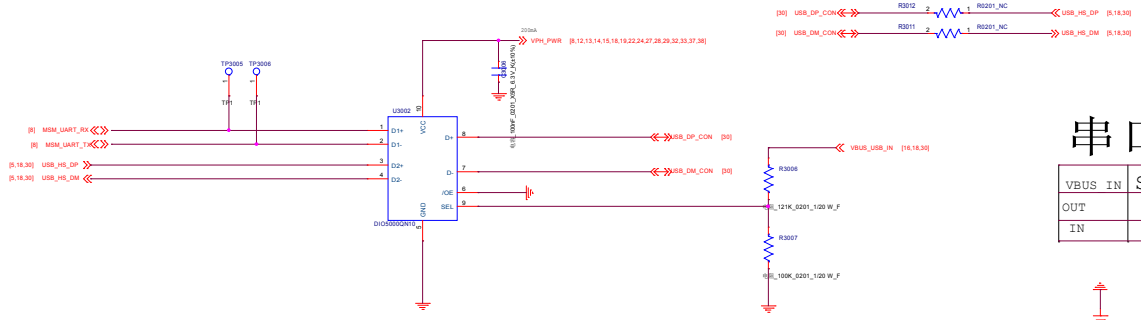

串口开关

VBUS IN	SEL	SELECT(default PD)
OUT	0	D=D1
IN	1	D=D2

Company: Huaqin	
Block Title	SIM_SD_KEY_LINK_BATT
Project	T18_I-Shape_SM8150_MBoard 1.0
Date: Tuesday, June 30, 2020	Sheet 30 of 39

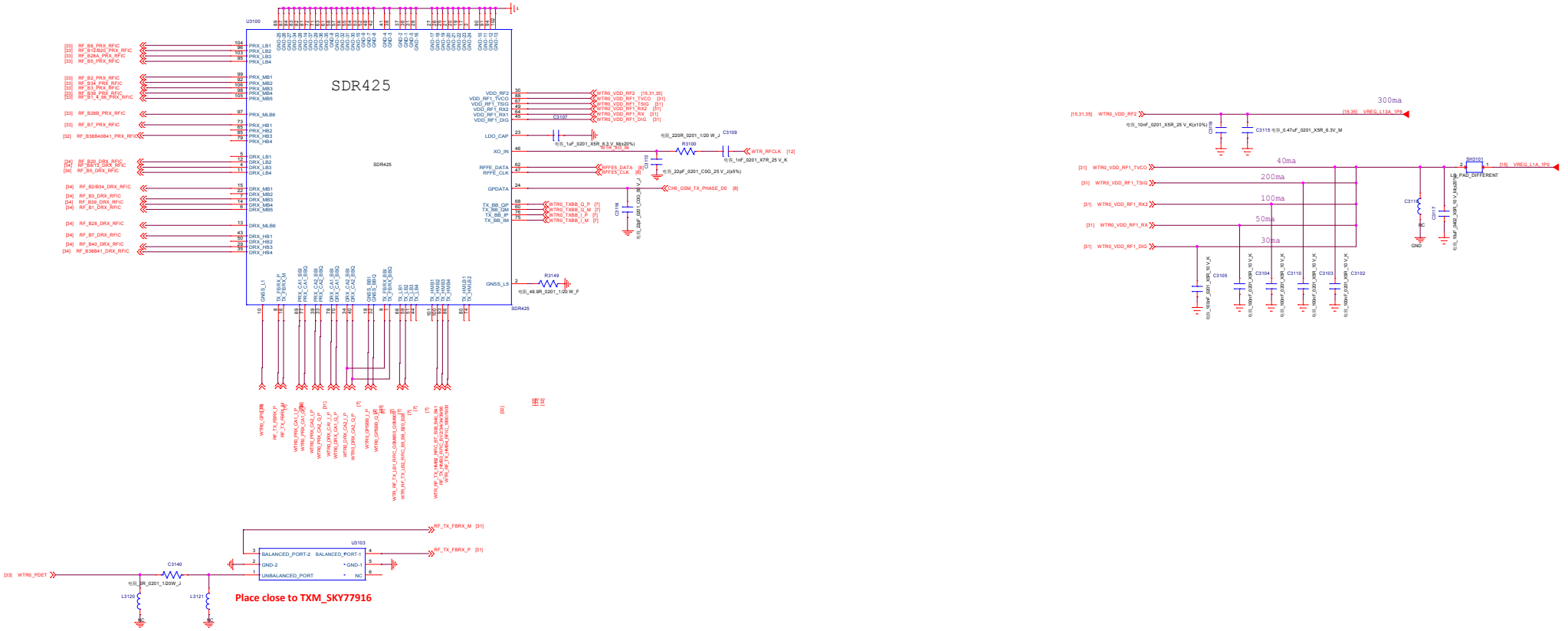

华勤通讯 Huaqin Telecom Technology Com.,Ltd		
Title	31_RF_SDR425_Pin_Out	
Size D	Project Soda_MB_V1	Rev V1
Date: Tuesday, June 30, 2020	Sheet 31 of 39	

PA & PA THERMAL

REF 3401-3499

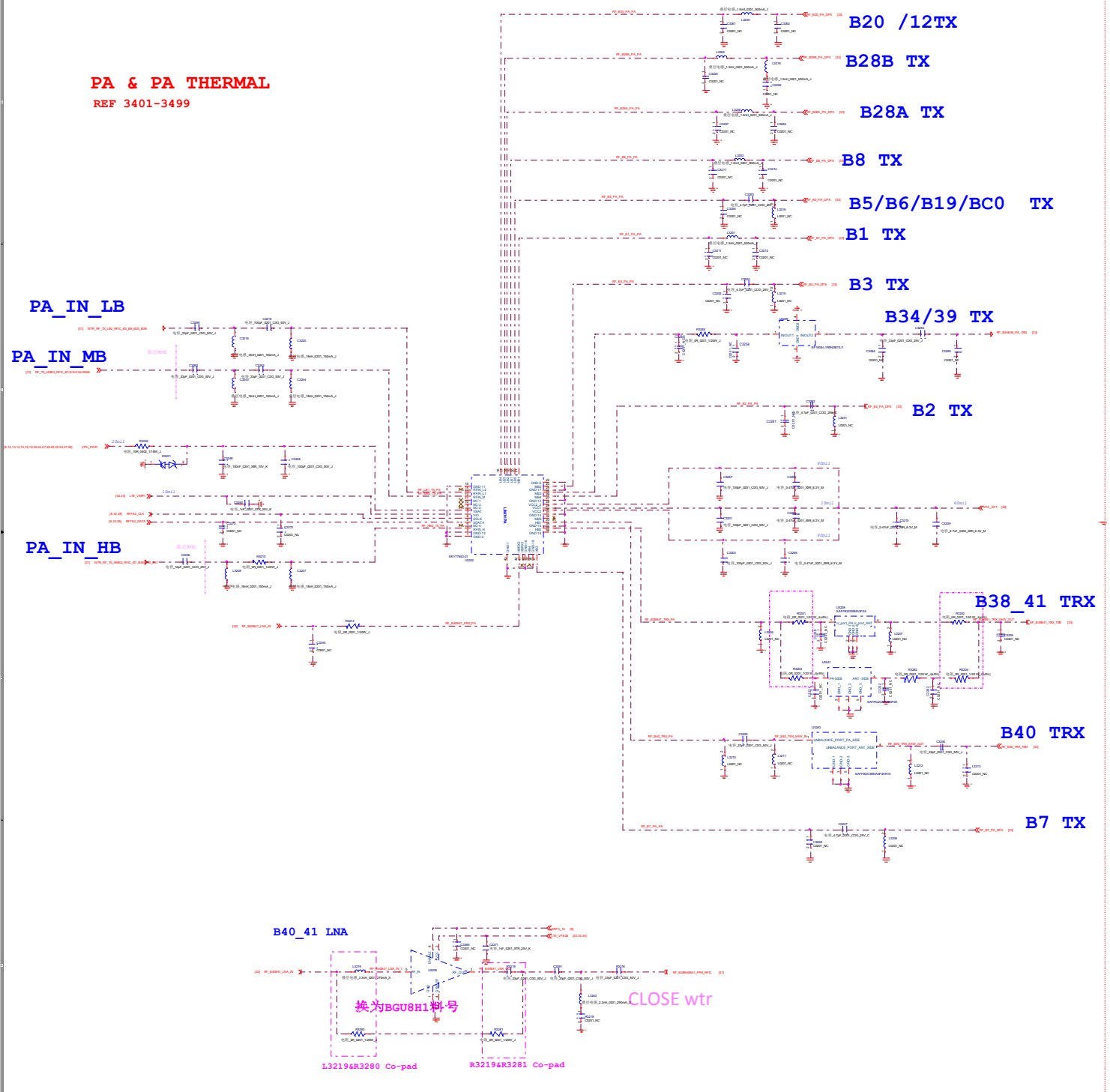

RF Power Supply

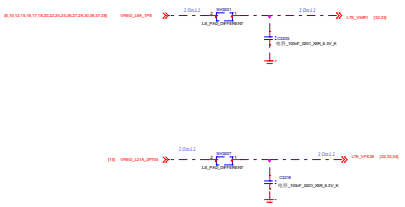

华勤通讯 Huaqin Telecom Technology Com.,Ltd			
Title	32_RF_SDR425_RF_TX		
Size E	Project	Soda_MB_V1	Rev V1
Date: Tuesday, June 30, 2020		Sheet 32 of 39	

DPDT SWITCH

优先保证射频走线，兼容通路，不要有断头线

空口检测

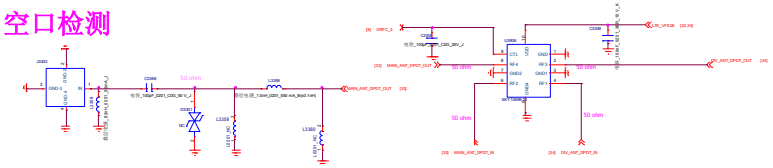

ASM SWITCH

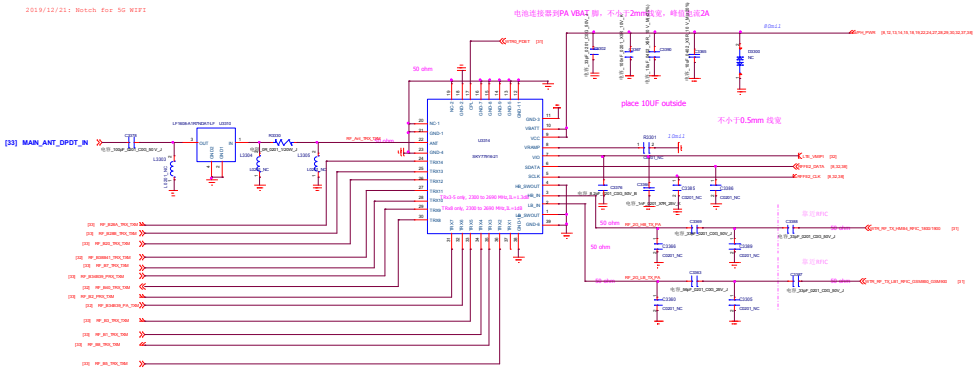

HMB TRX

HMB TRX

B7 DPX

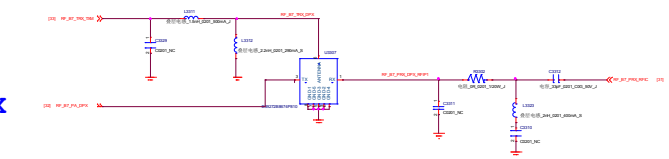

B1 DPX

B3/4 DPX

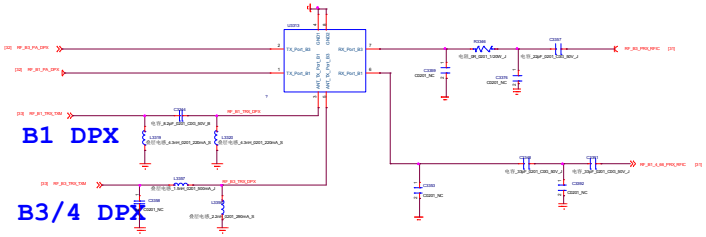

LB TRX

B5/B6/B19 BCO DPX

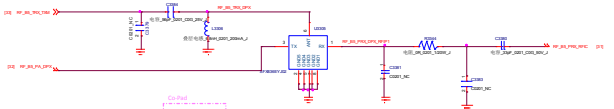

B8 DPX

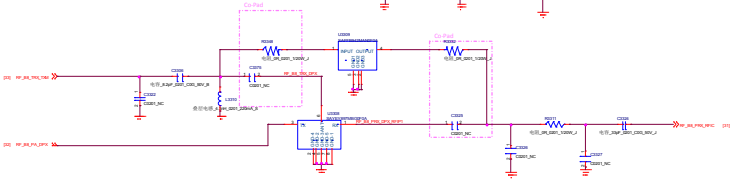

B12/20 DPX

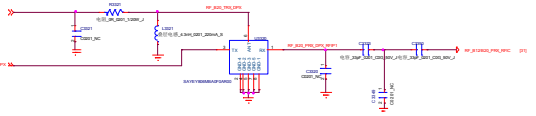

B34B39/PCS_PRX

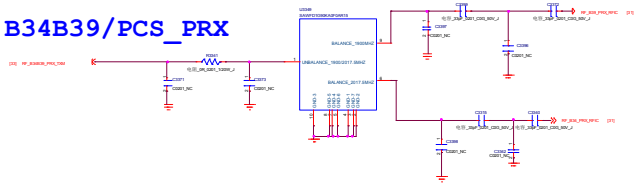

B28B DPX

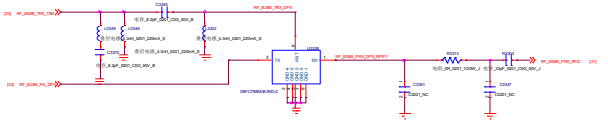

B28A DPX

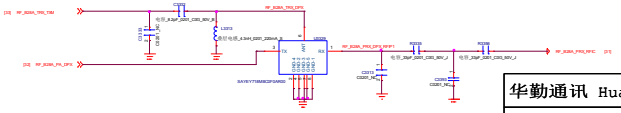

B2 SAW

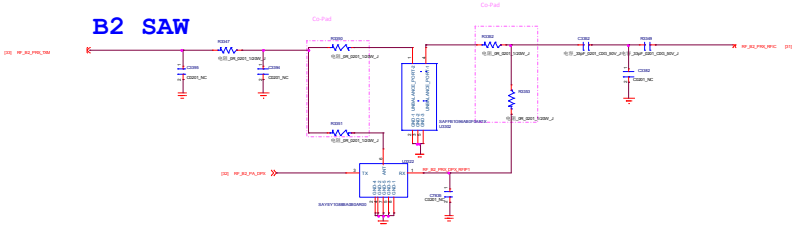

B2 DPX

华勤通讯 Huaqin Telecom Technology Com.,Ltd			
Title	33_RF_SDR425_RF_PRX		
Size E	Project Soda_MB_V1		Rev V1
Date: Tuesday, June 30, 2020		Sheet 33 of 39	

DIV_ANT

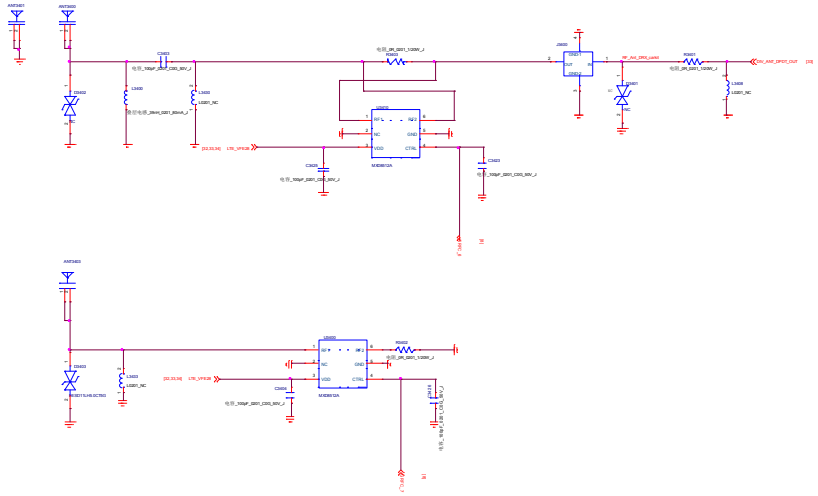

DRX Switch

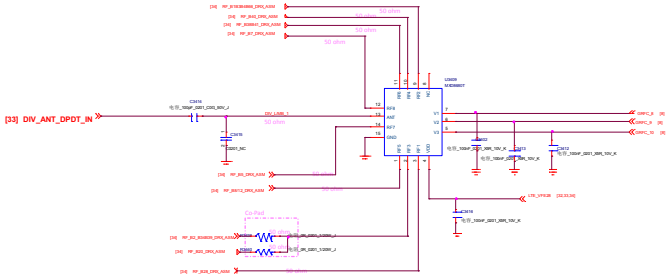

B1/B3 DRX

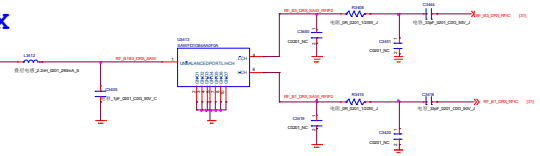

B28 DRX

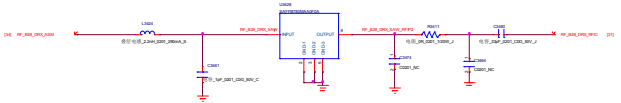

B34/B39 DRX

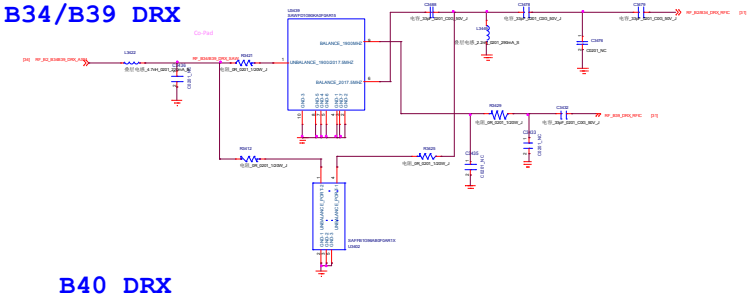

B20 DRX

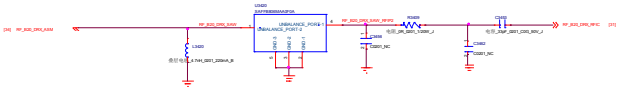

B40 DRX

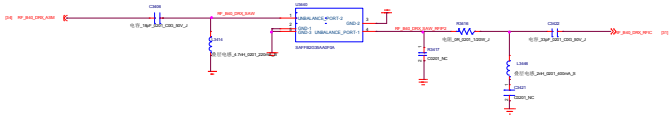

B8/12 DRX

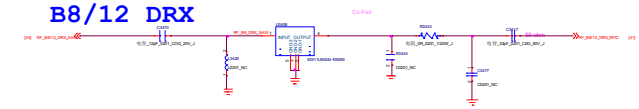

B38/B41 DRX

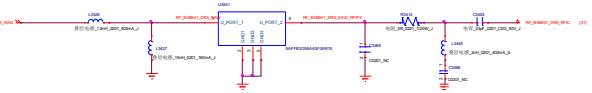

B5/B6/B19/BCO DRX

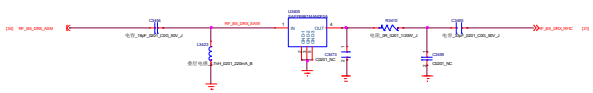

B7 DRX

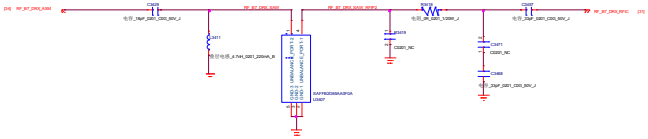

华勤通讯 Huaqin Telecom Technology Com.,Ltd			
Title	34_RF_SDR425_RF_DRX		
Size E	Project Soda_MB_V1		Rev V1
Date: Tuesday, June 30, 2020		Sheet 34 of 39	

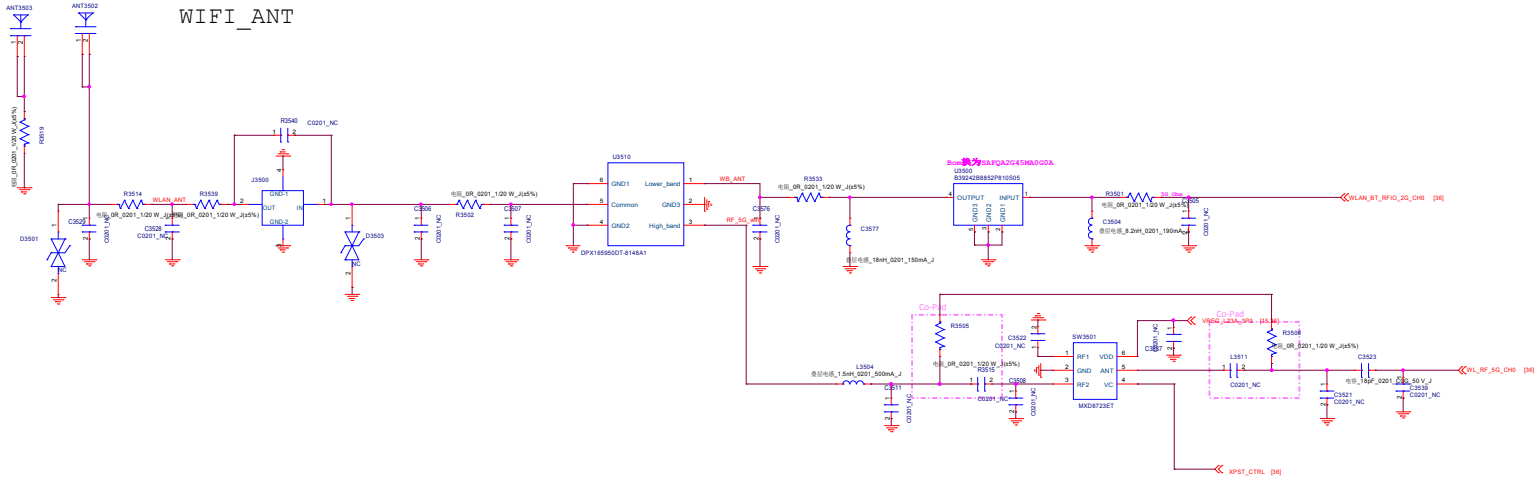

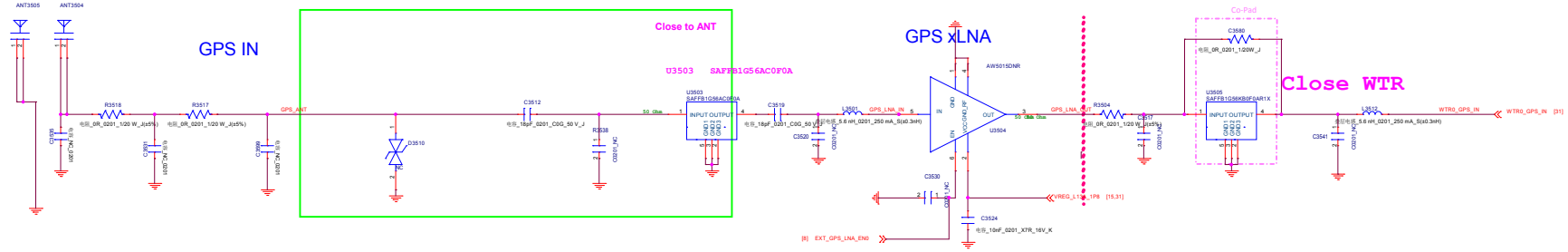

Schematic design notice of "51_CONNECTIVITY_CONSYS_MT6631"	
Note 51-1:	For R5015 size, please select 0402 size or larger one
Note 51-2:	Please refer to MT6765 Baseband design notice for VCN33 LDO selection guide
Note 51-3:	If WiFi 5G not support, connect pin 34(WF_RF_5G) to GND
Note 51-4:	Pin 36 (AVDD28_FM) must be connected to VCN28 even if FM not support

华勤通讯 Huaqin Telecom Technology Com.,Ltd		
Title	35_CONNECTIVITY_CONSYS_WCN3950	
Size D	Project Soda_MB_V1	Rev V1
Date: Tuesday, June 30, 2020	Sheet 35 of 39	

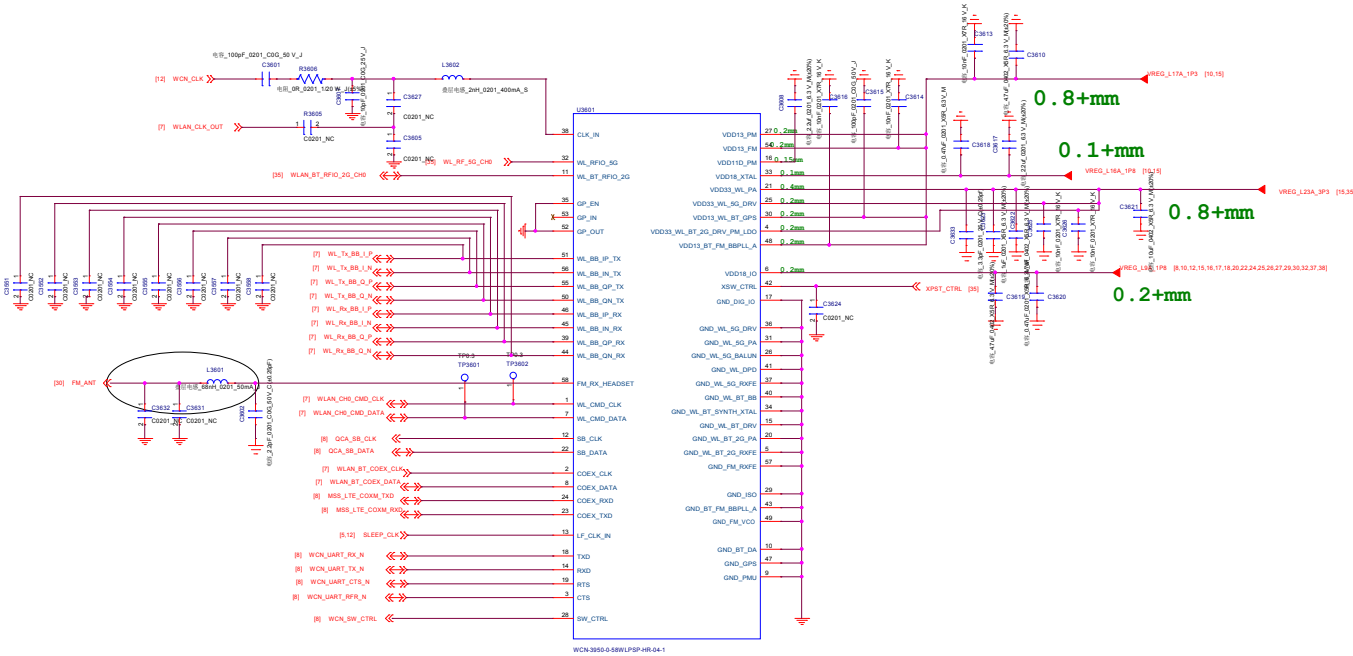

华勤通讯 Huaqin Telecom Technology Com.,Ltd		
Title	35_CONNECTIVITY_CONSYS_WCN3950	
Size D	Project BACON_MB_V3	Rev V1
Date: Tuesday, June 30, 2020	Sheet 36 of 39	

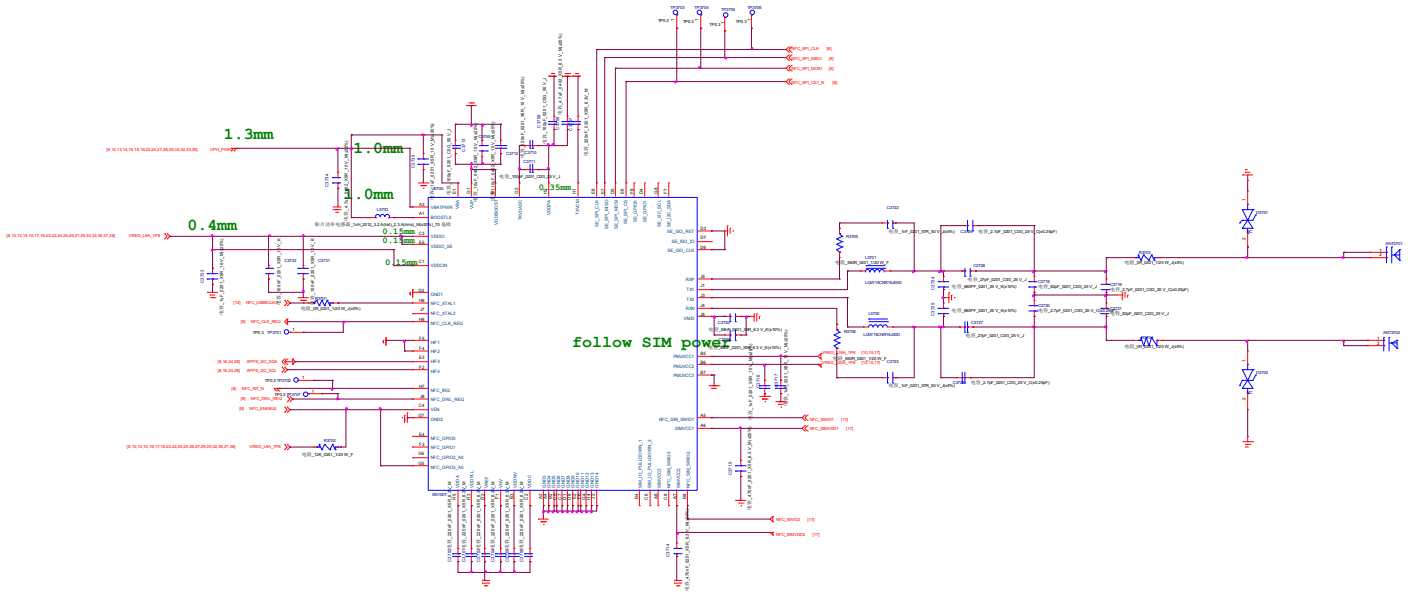

华勤通讯 Huaqin Telecom Technology Com.,Ltd		
Title	37_NFC	
Size E	Project Soda_MB_V1	Rev V1
Date: Tuesday, June 30, 2020	Sheet 37 of 39	

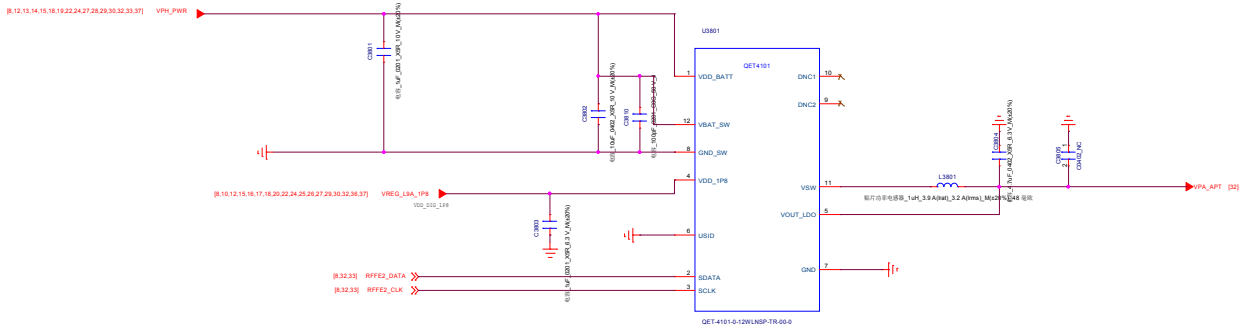

华勤通讯 Huaqin Telecom Technology Com.,Ltd		
Title 38_QET		
Size D	Project Soda_MB_V1	Rev V1
Date: Tuesday, June 30, 2020		Sheet 38 of 39

Test Points

REF 2301-2399

GND

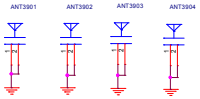

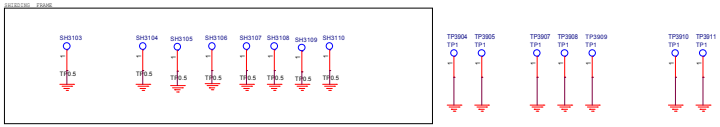

光学定位孔

Screw gasket

SMT Downlond Mode

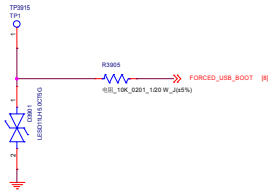

TP/GND/Shielding

Company: Hasqin	
Block Title	Test Points
Project	T18_I-Shape_SM8115_MB
Rev	1.0
Date:	Tuesday, June 30, 2020
Sheet	39 of 39