P684-A01 GT216 DESKTOP Low Profile
PCI-EXPRESSx16 DL-DVI HDMI VGA DDR3

Page 1: P684-A01 OVERVIEW
Page 2: PCI-EXPRESS INTERFACE
Page 3: PARTITION A FRAME BUFFER INTERFACE
Page 4: PARTITION A MEMORIES
Page 5: FBA DECOUPLING CAPS & NVVDD DECOUPLING CAPS
Page 6: PARTITION C FRAME BUFFER INTERFACE
Page 7: PARTITION C MEMORIES
Page 8: FBC DECOUPLING CAPS
Page 9: DACA (SOUTH DVI-I)
Page 10: DACB (cable up VGA)
Page 11: IFP AB (SOUTH DVI-I)
Page 12: IFP C (NORTH HDMI)
Page 13: IFP D (UNUSED)
Page 14: IFP EF (UNUSED)
Page 15: MIOA & MIOB
Page 16: XTAL, MECHANICALS, THERMALS
Page 17: FAN CONTROL, GPIO, JTAG
Page 18: BIOS ROM, HDCP ROM, STRAPPING OPTIONS
Page 19: LINEAR POWER SUPPLIES
Page 20: FBVDDQ/PEXVDD POWER SUPPLY
Page 21: NVVDD POWER SUPPLY

5.0

Page 21: PWM Change to UP6205 ; Add UP6262 Circuit

Page 20: Removed GPIO7_FBVDD_MODE Circuit
Removed GPIO13

Page 19: Removed 3V3 change to 1.8V IFP_PLLVDD SUPPLY

Page 18: Removed INFO ROM, HDCP ROM

Page 17: Removed 2Pin FAN CONTROL
Removed JTAG

5.1

Page 20: Changed L10 Footprint,removed Q5,Q15 co-layout Powerpak MOS
Page 12: Changed J1 Footprint

MSIS-RMA
夏舒萍
20100601

REV	VARIANT	NVPN	ASSEMBLY
B	BASE	600-10684-base-100	BASE LEVEL GENERIC SCHEMATIC ONLY, COMMON & NO_STUFF ASSEMBLY NOTES AND BOM NOT FINAL
1	SKU0000	600-10684-0000-100	GT216-350 600/1500MHz 1024MB 64Mx16 BGA100 800MHz DDR3 DVI-I/DP/HDMI/VGA
2	<UNDEFINED>	<UNDEFINED>	<UNDEFINED>
3	<UNDEFINED>	<UNDEFINED>	<UNDEFINED>
4	<UNDEFINED>	<UNDEFINED>	<UNDEFINED>
5	<UNDEFINED>	<UNDEFINED>	<UNDEFINED>
6	<UNDEFINED>	<UNDEFINED>	<UNDEFINED>
7	<UNDEFINED>	<UNDEFINED>	<UNDEFINED>
8	<UNDEFINED>	<UNDEFINED>	<UNDEFINED>
9	<UNDEFINED>	<UNDEFINED>	<UNDEFINED>
10	<UNDEFINED>	<UNDEFINED>	<UNDEFINED>
11	<UNDEFINED>	<UNDEFINED>	<UNDEFINED>
12	<UNDEFINED>	<UNDEFINED>	<UNDEFINED>
13	<UNDEFINED>	<UNDEFINED>	<UNDEFINED>
14	<UNDEFINED>	<UNDEFINED>	<UNDEFINED>
15	<UNDEFINED>	<UNDEFINED>	<UNDEFINED>

ASSEMBLY	BASE LEVEL GENERIC SCHEMATIC ONLY, COMMON & NO_STUFF ASSEMBLY NOTES AND BOM NOT FINAL
PAGE DETAIL	P684-A01 OVERVIEW

ALL NVIDIA DESIGN SPECIFICATIONS, REFERENCE SPECIFICATIONS, REFERENCE BOARDS, FILES, DRAWINGS, DIAGNOSTICS, LISTS AND OTHER DOCUMENTS OR INFORMATION (TOGETHER AND SEPARATELY, 'MATERIALS') ARE BEING PROVIDED 'AS IS'. THE MATERIALS MAY CONTAIN KNOWN AND UNKNOWN VIOLATIONS OR DEVIATIONS OF INDUSTRY STANDARDS AND SPECIFICATIONS. NVIDIA MAKES NO WARRANTIES, EXPRESSED, IMPLIED, STATUTORY OR OTHERWISE WITH RESPECT TO THE MATERIALS OR OTHERWISE, AND EXPRESSLY DISCLAIMS ALL IMPLIED WARRANTIES INCLUDING, WITHOUT LIMITATION, THE WARRANTIES OF DESIGN, OF NONINFRINGEMENT, MERCHANTABILITY OR FITNESS FOR A PARTICULAR PURPOSE, OR ARISING FROM A COURSE OF DEALING, TRADE USAGE, TRADE PRACTICE, OR INDUSTRY STANDARDS.

NVIDIA CORPORATION
2701 SAN TOMAS EXPRESSWAY
SANTA CLARA, CA 95050, USA

NV_PN	600-10684-base-100 C		
ID		PAGE	
NAME		DATE	13-FEB-2009

PCI-EXPRESS INTERFACE

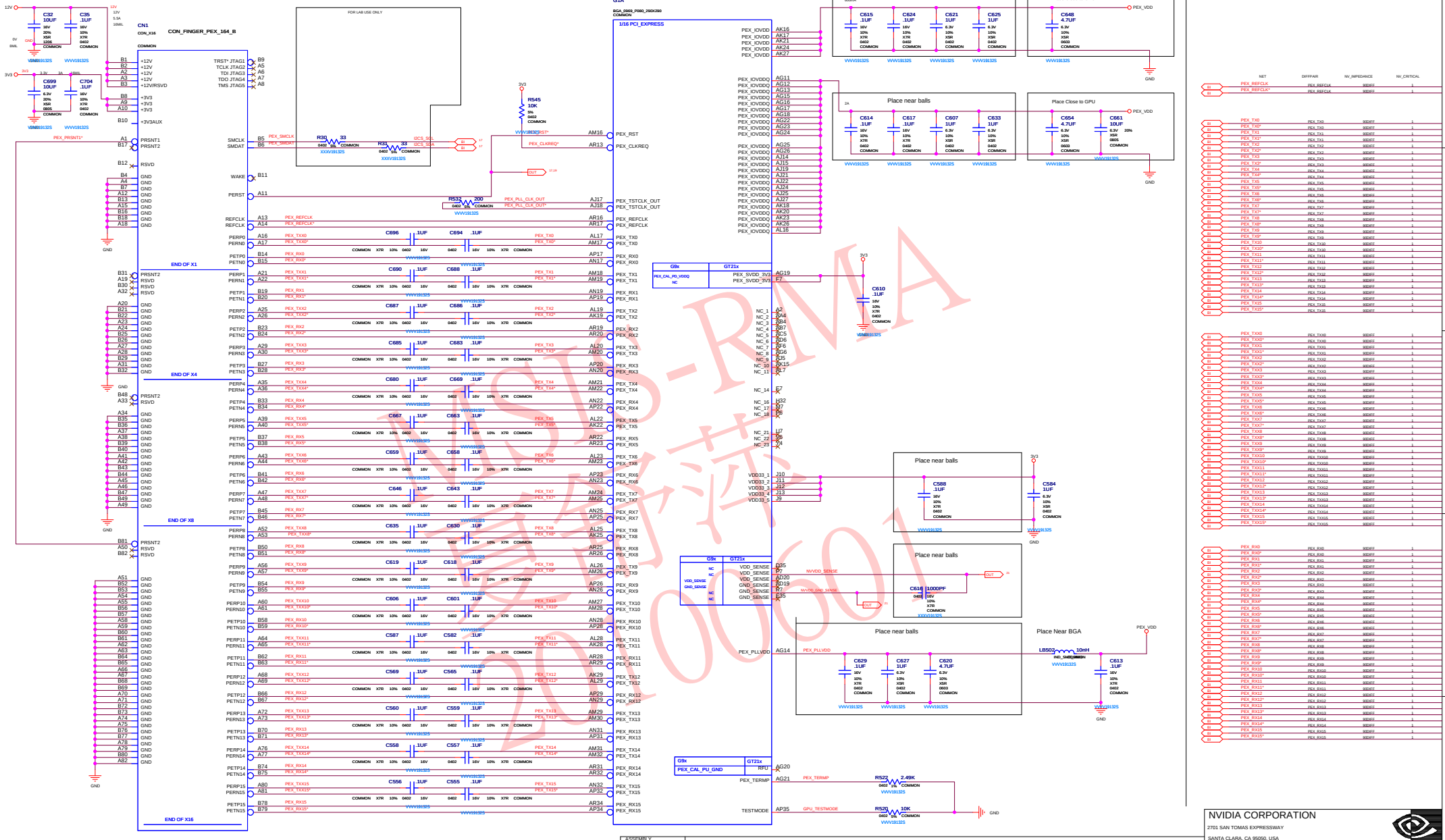

ALL NVIDIA DESIGN SPECIFICATIONS, REFERENCE SPECIFICATIONS, REFERENCE BOARDS, FILES, DRAWINGS, DIAGNOSTICS, LISTS AND OTHER DOCUMENTS OR INFORMATION (TOGETHER AND SEPARATELY, 'MATERIALS') ARE BEING PROVIDED 'AS IS'. THE MATERIALS MAY CONTAIN KNOWN AND UNKNOWN VIOLATIONS OR DEVIATIONS OF INDUSTRY STANDARDS AND SPECIFICATIONS. NVIDIA MAKES NO WARRANTIES, EXPRESSED, IMPLIED, STATUTORY OR OTHERWISE WITH RESPECT TO THE MATERIALS OR OTHERWISE, AND EXPRESSLY DISCLAIMS ALL IMPLIED WARRANTIES INCLUDING, WITHOUT LIMITATION, THE WARRANTIES OF DESIGN, OF NONINFRINGEMENT, MERCHANTABILITY OR FITNESS FOR A PARTICULAR PURPOSE, OR ARISING FROM A COURSE OF DEALING, TRADE USAGE, TRADE PRACTICE, OR INDUSTRY STANDARDS.

PARTITION A FRAME BUFFER INTERFACE

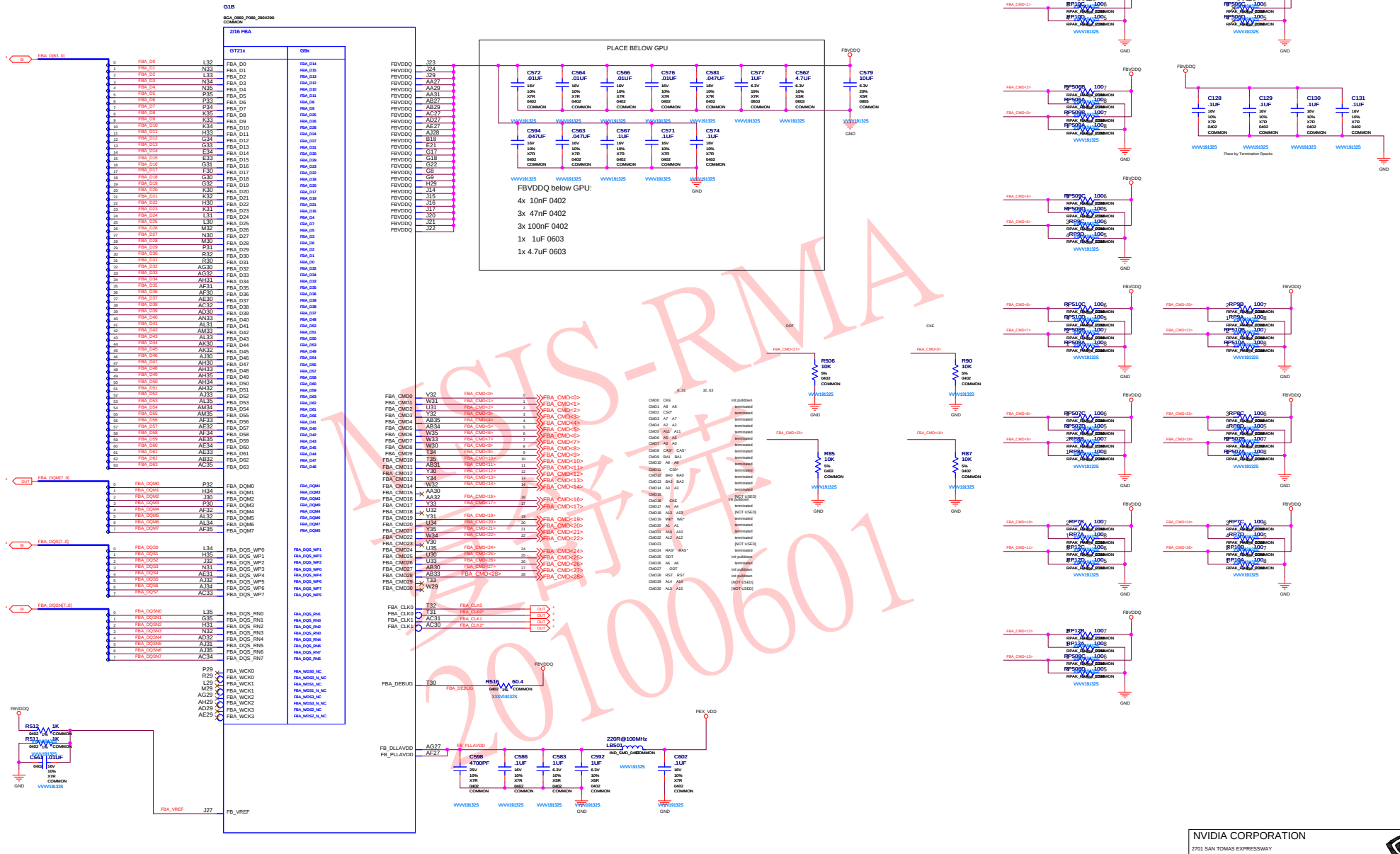

MSIS-RMA 20100601

NVIDIA CORPORATION	
2701 SAN TOMAS EXPRESSWAY	
SANTA CLARA, CA 95050, USA	
NV_PN	600-10684-base-100 C
ID	PAGE
NAME	DATE 13-FEB-2009
ASSEMBLY	
PAGE DETAIL	PARTITION A FRAME BUFFER INTERFACE

ALL NVIDIA DESIGN SPECIFICATIONS, REFERENCE SPECIFICATIONS, REFERENCE BOARDS, FILES, DRAWINGS, DIAGNOSTICS, LISTS AND OTHER DOCUMENTS OR INFORMATION (TOGETHER AND SEPARATELY, 'MATERIALS') ARE BEING PROVIDED 'AS IS'. THE MATERIALS MAY CONTAIN KNOWN AND UNKNOWN VIOLATIONS OR DEVIATIONS OF INDUSTRY STANDARDS AND SPECIFICATIONS. NVIDIA MAKES NO WARRANTIES, EXPRESSED, IMPLIED, STATUTORY OR OTHERWISE WITH RESPECT TO THE MATERIALS OR OTHERWISE, AND EXPRESSLY DISCLAIMS ALL IMPLIED WARRANTIES INCLUDING, WITHOUT LIMITATION, THE WARRANTIES OF DESIGN, OF NONINFRINGEMENT, MERCHANTABILITY OR FITNESS FOR A PARTICULAR PURPOSE, OR ARISING FROM A COURSE OF DEALING, TRADE USAGE, TRADE PRACTICE, OR INDUSTRY STANDARDS.

PARTITION A MEMORY

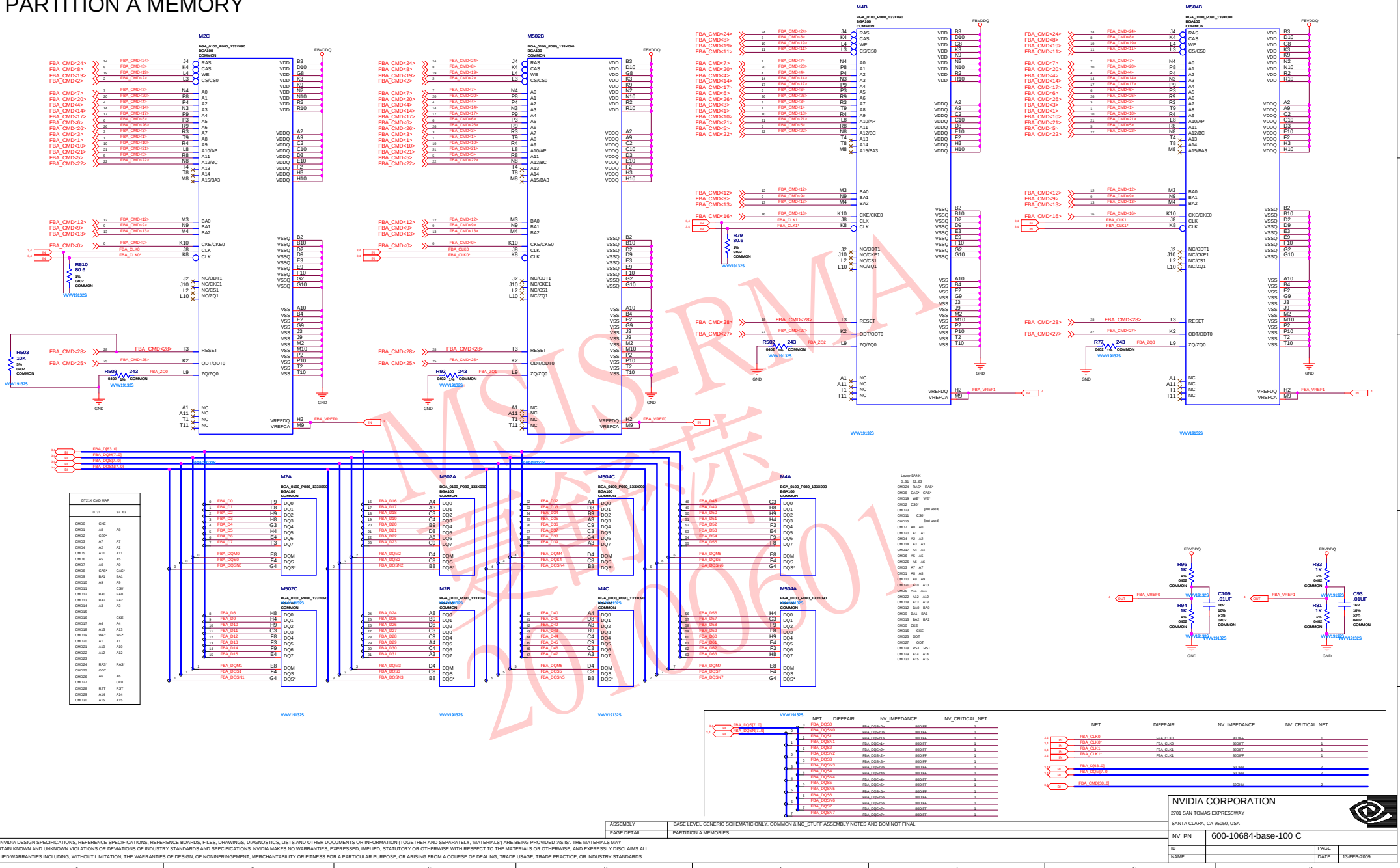

MSI-RMA 2010061

ASSEMBLY	BASE LEVEL GENERIC SCHEMATIC ONLY, COMMON & NO_STUFF ASSEMBLY NOTES AND BOM NOT FINAL
PAGE DETAIL	PARTITION A MEMORIES

ALL NVIDIA DESIGN SPECIFICATIONS, REFERENCE SPECIFICATIONS, REFERENCE BOARDS, FILES, DRAWINGS, DIAGNOSTICS, LISTS AND OTHER DOCUMENTS OR INFORMATION (TOGETHER AND SEPARATELY, 'MATERIALS') ARE BEING PROVIDED 'AS IS'. THE MATERIALS MAY CONTAIN KNOWN AND UNKNOWN VIOLATIONS OR DEVIATIONS OF INDUSTRY STANDARDS AND SPECIFICATIONS. NVIDIA MAKES NO WARRANTIES, EXPRESSED, IMPLIED, STATUTORY OR OTHERWISE WITH RESPECT TO THE MATERIALS OR OTHERWISE, AND EXPRESSLY DISCLAIMS ALL IMPLIED WARRANTIES INCLUDING, WITHOUT LIMITATION, THE WARRANTIES OF DESIGN, OF NONINFRINGEMENT, MERCHANTABILITY OR FITNESS FOR A PARTICULAR PURPOSE, OR ARISING FROM A COURSE OF DEALING, TRADE USAGE, TRADE PRACTICE, OR INDUSTRY STANDARDS.

NVIDIA CORPORATION
2701 SAN TOMAS EXPRESSWAY
SANTA CLARA, CA 95050, USA

NV_PN	600-10684-base-100 C	
ID		PAGE
NAME		DATE 13-FEB-2009

FBA DECOUPLING CAPS & NVVDD DECOUPLING CAPS

Decoupling for FBA 0..15

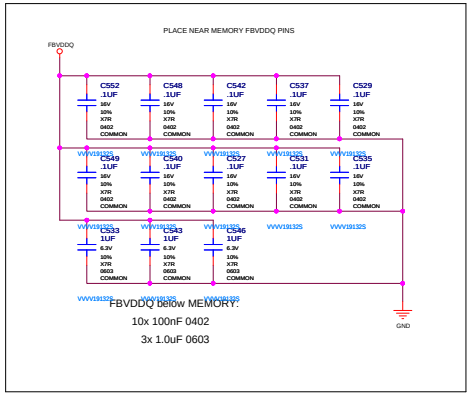

Decoupling for FBA 16..31

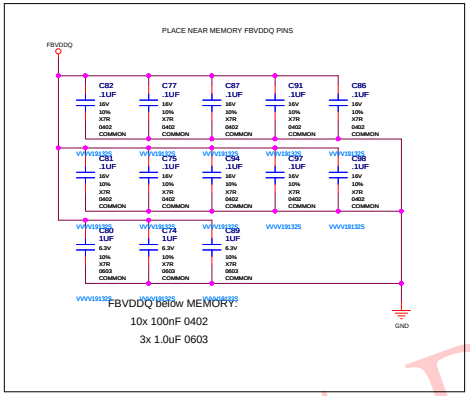

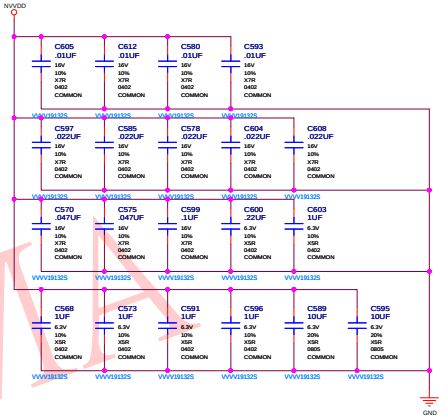

NVVDD under GPU:

4x 0.01uF 0402 X7R
5x 0.022uF 0402 X7R
2x 0.047uF 0402 X7R
1x 0.1uF 0402 X7R
1x 0.22uF 0402 X7R
4x 1.0uF 0402 X5R
2x 2.2uF 0402 X5R
2x 10uF 0805 X5R

Decoupling for FBA 32..47

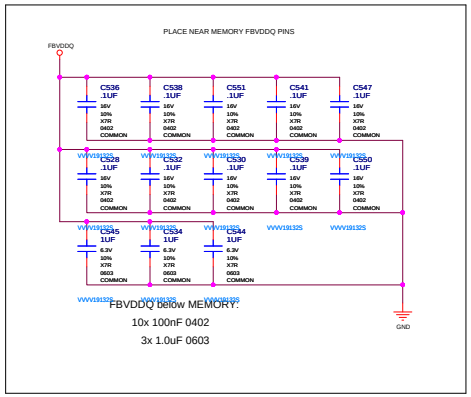

Decoupling for FBA 48..63

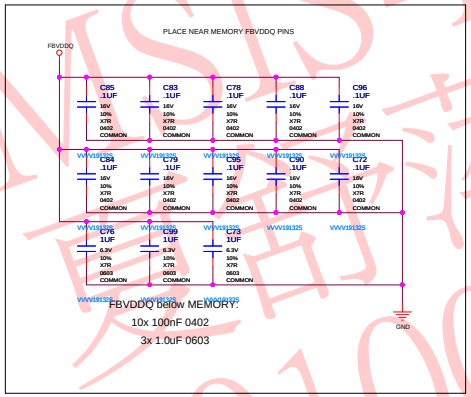

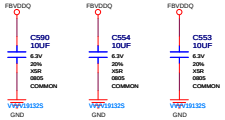

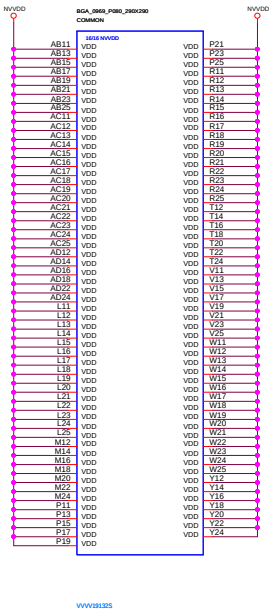

NVIS-RMA 黄启萍 20100601

ASSEMBLY	BASE LEVEL GENERIC SCHEMATIC ONLY, COMMON & NO_STUFF ASSEMBLY NOTES AND BOM NOT FINAL
PAGE DETAIL	FBA DECOUPLING CAPS & NVVDD DECOUPLING CAPS

ALL NVIDIA DESIGN SPECIFICATIONS, REFERENCE SPECIFICATIONS, REFERENCE BOARDS, FILES, DRAWINGS, DIAGNOSTICS, LISTS AND OTHER DOCUMENTS OR INFORMATION (TOGETHER AND SEPARATELY, 'MATERIALS') ARE BEING PROVIDED 'AS IS'. THE MATERIALS MAY CONTAIN KNOWN AND UNKNOWN VIOLATIONS OR DEVIATIONS OF INDUSTRY STANDARDS AND SPECIFICATIONS. NVIDIA MAKES NO WARRANTIES, EXPRESSED, IMPLIED, STATUTORY OR OTHERWISE WITH RESPECT TO THE MATERIALS OR OTHERWISE, AND EXPRESSLY DISCLAIMS ALL IMPLIED WARRANTIES INCLUDING, WITHOUT LIMITATION, THE WARRANTIES OF DESIGN, OF NONINFRINGEMENT, MERCHANTABILITY OR FITNESS FOR A PARTICULAR PURPOSE, OR ARISING FROM A COURSE OF DEALING, TRADE USAGE, TRADE PRACTICE, OR INDUSTRY STANDARDS.

NVIDIA CORPORATION
2701 SAN TOMAS EXPRESSWAY
SANTA CLARA, CA 95050, USA

NV_PN	600-10684-base-100 C		
ID		PAGE	
NAME		DATE	13-FEB-2009

PARTITION C FRAME BUFFER INTERFACE

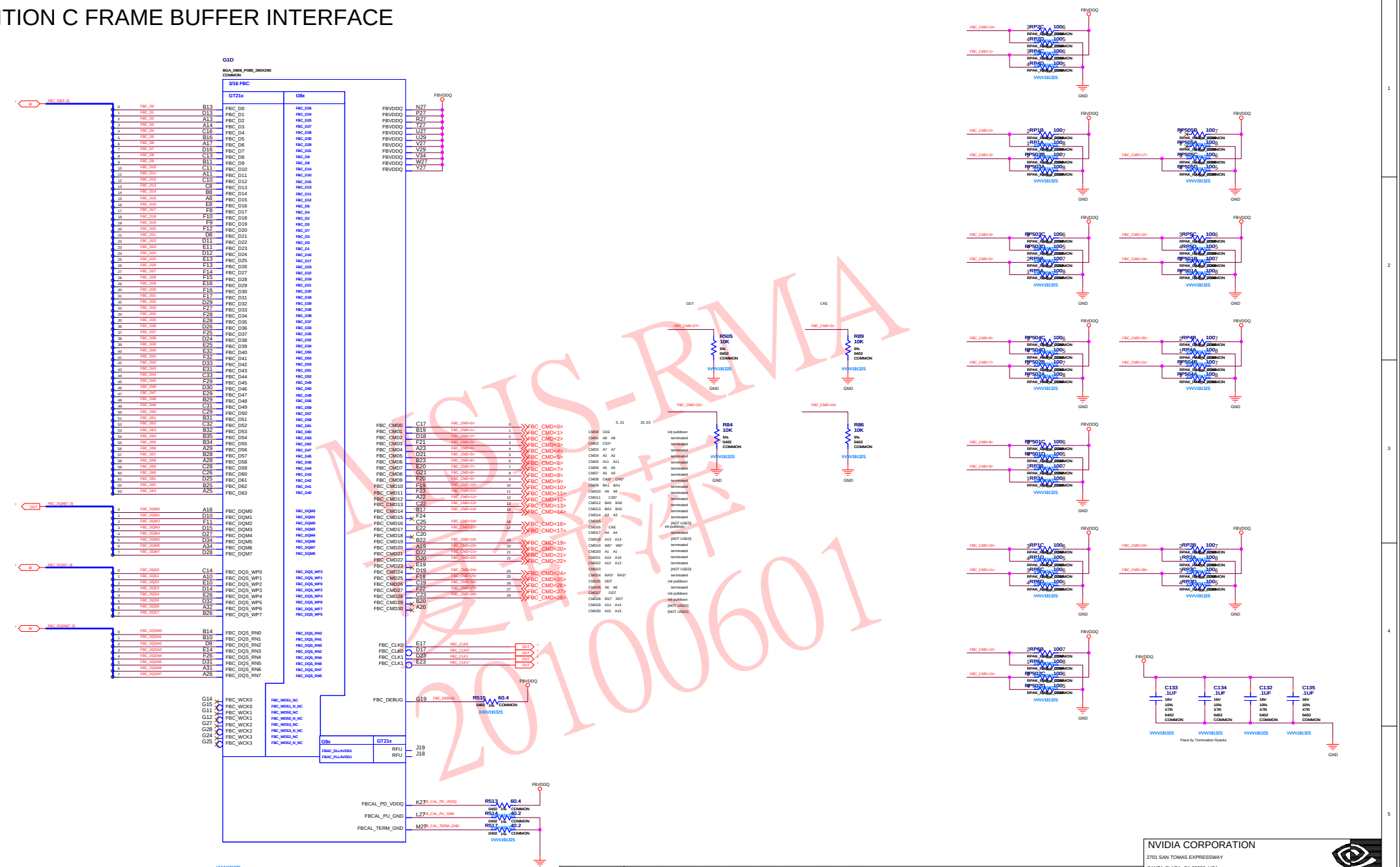

NVIDIA-RMA 2010060 1

ASSEMBLY	BASE LEVEL GENERIC SCHEMATIC ONLY, COMMON & NO_STUFF ASSEMBLY NOTES AND BOM NOT FINAL
PAGE DETAIL	PARTITION C FRAME BUFFER INTERFACE

ALL NVIDIA DESIGN SPECIFICATIONS, REFERENCE SPECIFICATIONS, REFERENCE BOARDS, FILES, DRAWINGS, DIAGNOSTICS, LISTS AND OTHER DOCUMENTS OR INFORMATION (TOGETHER AND SEPARATELY, 'MATERIALS') ARE BEING PROVIDED 'AS IS'. THE MATERIALS MAY CONTAIN KNOWN AND UNKNOWN VIOLATIONS OR DEVIATIONS OF INDUSTRY STANDARDS AND SPECIFICATIONS. NVIDIA MAKES NO WARRANTIES, EXPRESSED, IMPLIED, STATUTORY OR OTHERWISE WITH RESPECT TO THE MATERIALS OR OTHERWISE, AND EXPRESSLY DISCLAIMS ALL IMPLIED WARRANTIES INCLUDING, WITHOUT LIMITATION, THE WARRANTIES OF DESIGN, OF NONINFRINGEMENT, MERCHANTABILITY OR FITNESS FOR A PARTICULAR PURPOSE, OR ARISING FROM A COURSE OF DEALING, TRADE USAGE, TRADE PRACTICE, OR INDUSTRY STANDARDS.

NVIDIA CORPORATION
2701 SAN TOMAS EXPRESSWAY
SANTA CLARA, CA 95050, USA

NV_PN	600-10684-base-100 C		
ID		PAGE	
NAME		DATE	13-FEB-2009

PARTITION C MEMORY

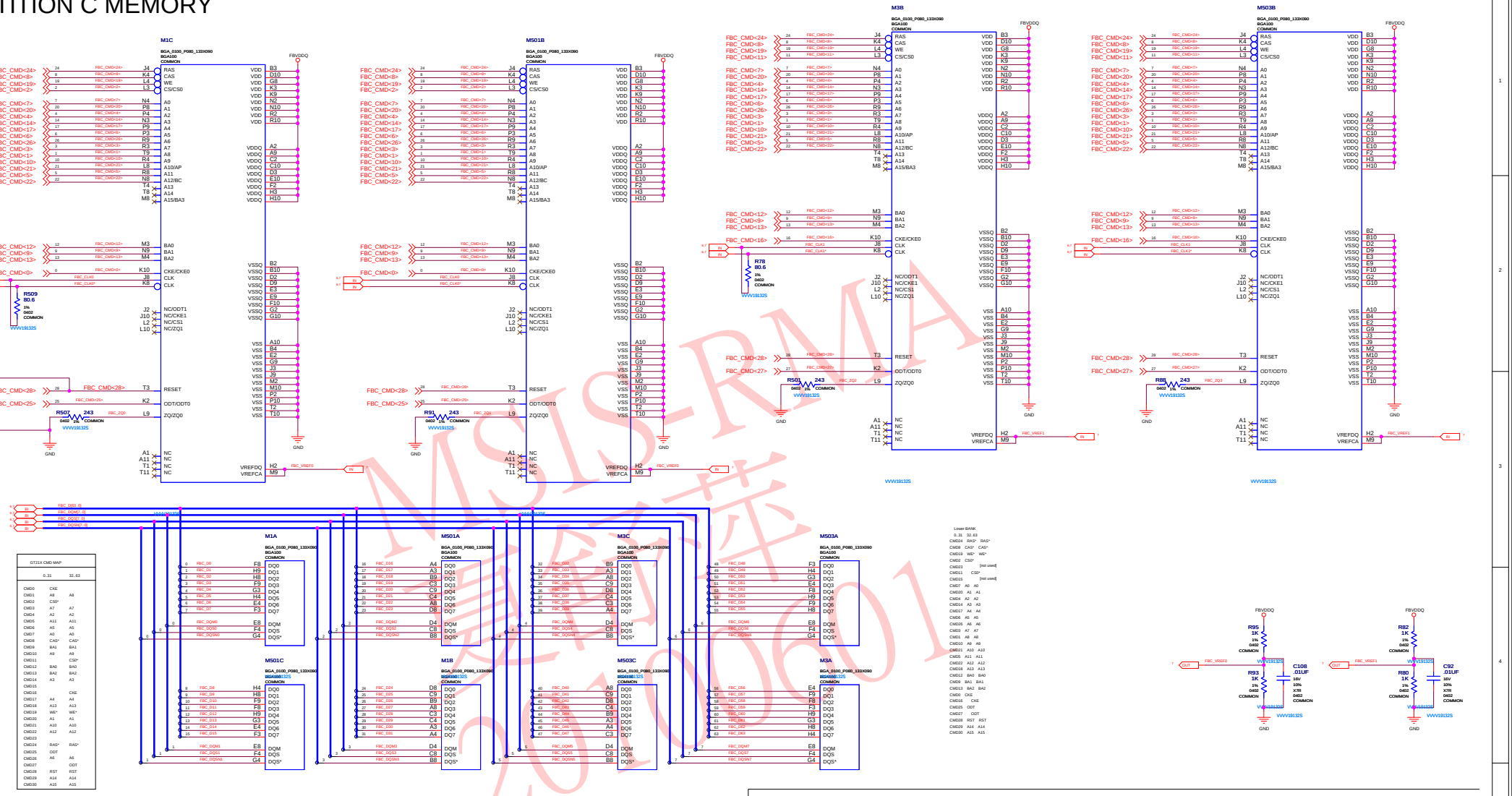

ALL NVIDIA DESIGN SPECIFICATIONS, REFERENCE SPECIFICATIONS, REFERENCE BOARDS, FILES, DRAWINGS, DIAGNOSTICS, LISTS AND OTHER DOCUMENTS OR INFORMATION (TOGETHER AND SEPARATELY, 'MATERIALS') ARE BEING PROVIDED 'AS IS'. THE MATERIALS MAY CONTAIN KNOWN AND UNKNOWN VIOLATIONS OR DEVIATIONS OF INDUSTRY STANDARDS AND SPECIFICATIONS. NVIDIA MAKES NO WARRANTIES, EXPRESSED, IMPLIED, STATUTORY OR OTHERWISE WITH RESPECT TO THE MATERIALS OR OTHERWISE, AND EXPRESSLY DISCLAIMS ALL IMPLIED WARRANTIES INCLUDING, WITHOUT LIMITATION, THE WARRANTIES OF DESIGN, OF NONINFRINGEMENT, MERCHANTABILITY OR FITNESS FOR A PARTICULAR PURPOSE, OR ARISING FROM A COURSE OF DEALING, TRADE USAGE, TRADE PRACTICE, OR INDUSTRY STANDARDS.

FBC DECOUPLING CAPS & NVVDD DECOUPLING CAPS

Decoupling for FBC 0..15

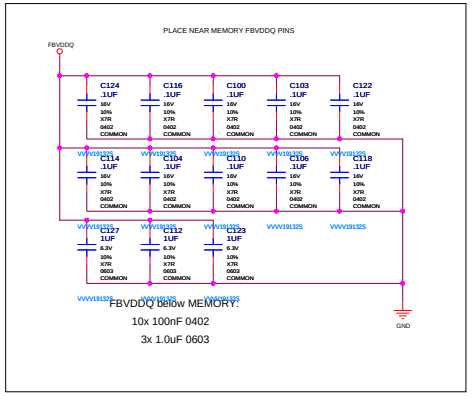

Decoupling for FBC 16..31

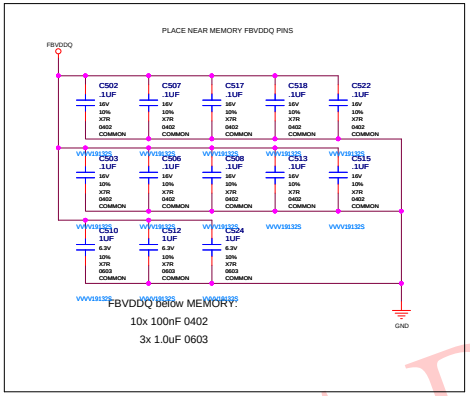

Decoupling for FBC 32..47

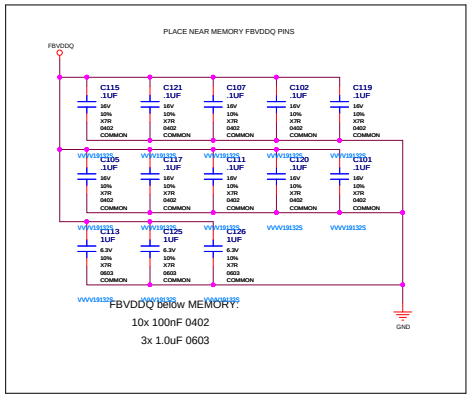

Decoupling for FBC 48..63

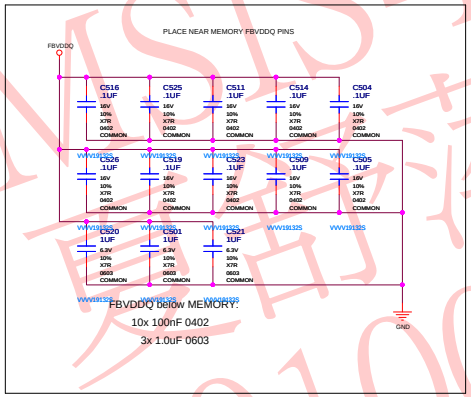

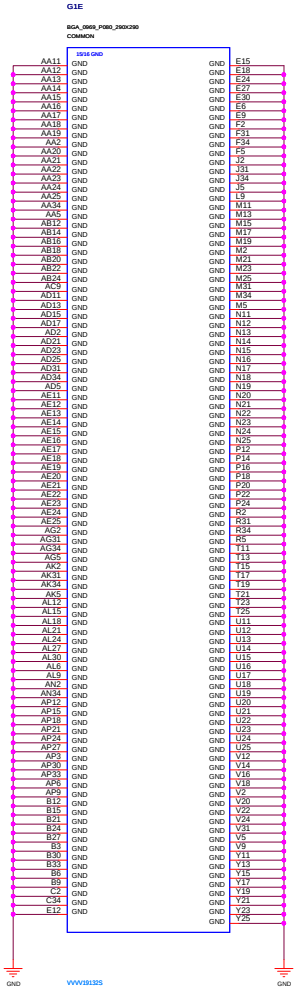

NVIS-RMA 夏昌萍 20100601

ASSEMBLY	BASE LEVEL GENERIC SCHEMATIC ONLY, COMMON & NO_STUFF ASSEMBLY NOTES AND BOM NOT FINAL
PAGE DETAIL	FBC DECOUPLING CAPS

ALL NVIDIA DESIGN SPECIFICATIONS, REFERENCE SPECIFICATIONS, REFERENCE BOARDS, FILES, DRAWINGS, DIAGNOSTICS, LISTS AND OTHER DOCUMENTS OR INFORMATION (TOGETHER AND SEPARATELY, 'MATERIALS') ARE BEING PROVIDED 'AS IS'. THE MATERIALS MAY CONTAIN KNOWN AND UNKNOWN VIOLATIONS OR DEVIATIONS OF INDUSTRY STANDARDS AND SPECIFICATIONS. NVIDIA MAKES NO WARRANTIES, EXPRESSED, IMPLIED, STATUTORY OR OTHERWISE WITH RESPECT TO THE MATERIALS OR OTHERWISE, AND EXPRESSLY DISCLAIMS ALL IMPLIED WARRANTIES INCLUDING, WITHOUT LIMITATION, THE WARRANTIES OF DESIGN, OF NONINFRINGEMENT, MERCHANTABILITY OR FITNESS FOR A PARTICULAR PURPOSE, OR ARISING FROM A COURSE OF DEALING, TRADE USAGE, TRADE PRACTICE, OR INDUSTRY STANDARDS.

NVIDIA CORPORATION
2701 SAN TOMAS EXPRESSWAY
SANTA CLARA, CA 95050, USA

NV_PN	600-10684-base-100 C		
ID		PAGE	
NAME		DATE	13-FEB-2009

DACA (SOUTH DVI-I)

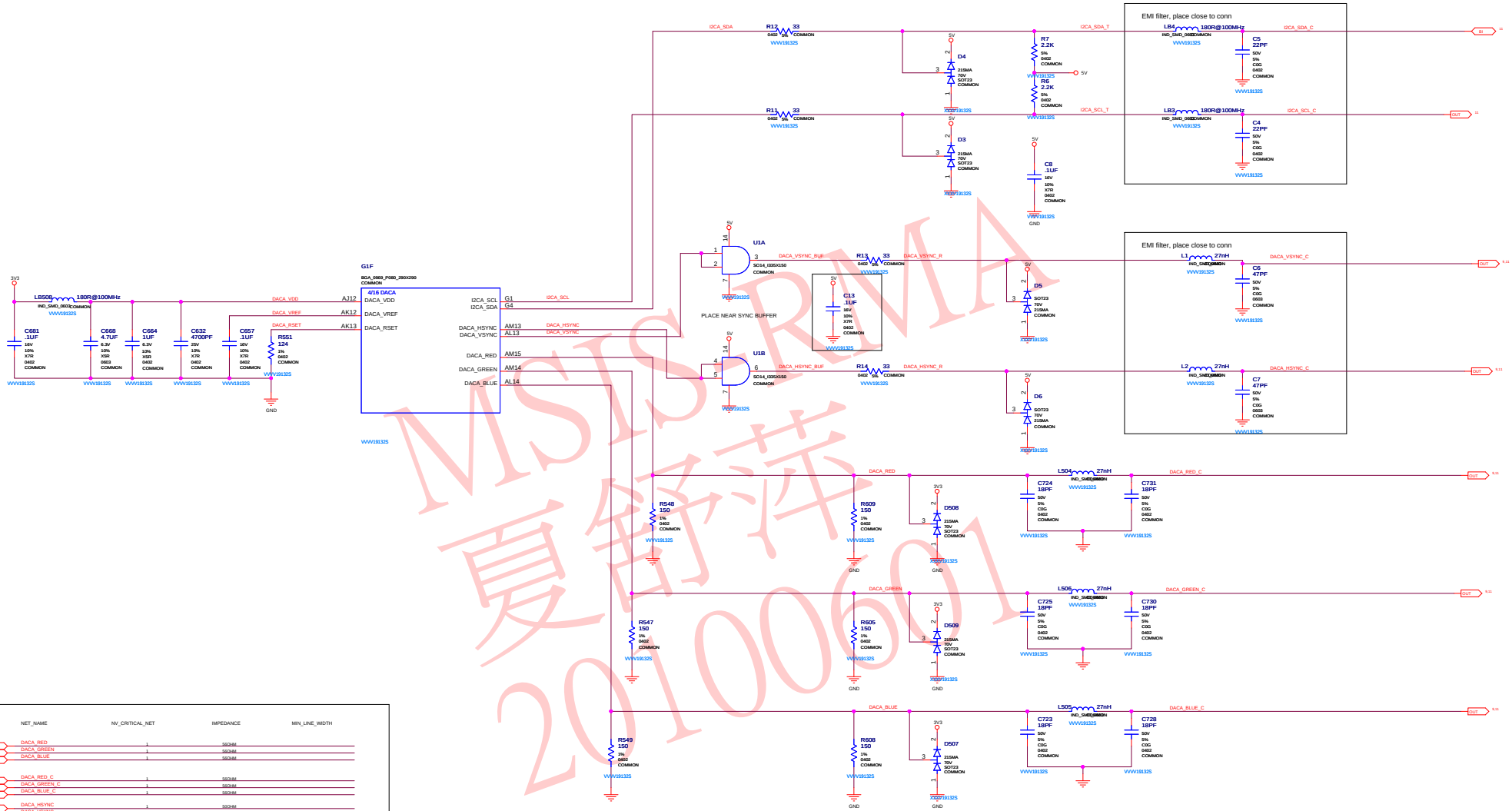

NET_NAME	NV_CRITICAL_NET	IMPEDANCE	MIN_LINE_WIDTH
DACA_RED	1	50OHM	
DACA_GREEN	1	50OHM	
DACA_BLUE	1	50OHM	
DACA_RED_C	1	50OHM	
DACA_GREEN_C	1	50OHM	
DACA_BLUE_C	1	50OHM	
DACA_HSYNC	1	50OHM	
DACA_VSYNC	1	50OHM	
DACA_HSYNC_R	1	50OHM	
DACA_VSYNC_R	1	50OHM	
DACA_VSYNC_BUF	1	50OHM	
DACA_HSYNC_BUF	1	50OHM	
DACA_VSYNC_C	1	50OHM	
DACA_HSYNC_C	1	50OHM	

ASSEMBLY	BASE LEVEL GENERIC SCHEMATIC ONLY, COMMON & NO_STUFF ASSEMBLY NOTES AND BOM NOT FINAL
PAGE DETAIL	DACA (SOUTH DVI-I)

ALL NVIDIA DESIGN SPECIFICATIONS, REFERENCE SPECIFICATIONS, REFERENCE BOARDS, FILES, DRAWINGS, DIAGNOSTICS, LISTS AND OTHER DOCUMENTS OR INFORMATION (TOGETHER AND SEPARATELY, 'MATERIALS') ARE BEING PROVIDED 'AS IS'. THE MATERIALS MAY CONTAIN KNOWN AND UNKNOWN VIOLATIONS OR DEVIATIONS OF INDUSTRY STANDARDS AND SPECIFICATIONS. NVIDIA MAKES NO WARRANTIES, EXPRESSED, IMPLIED, STATUTORY OR OTHERWISE WITH RESPECT TO THE MATERIALS OR OTHERWISE, AND EXPRESSLY DISCLAIMS ALL IMPLIED WARRANTIES INCLUDING, WITHOUT LIMITATION, THE WARRANTIES OF DESIGN, OF NONINFRINGEMENT, MERCHANTABILITY OR FITNESS FOR A PARTICULAR PURPOSE, OR ARISING FROM A COURSE OF DEALING, TRADE USAGE, TRADE PRACTICE, OR INDUSTRY STANDARDS.

NVIDIA CORPORATION
2701 SAN TOMAS EXPRESSWAY
SANTA CLARA, CA 95050, USA

NV_PN	600-10684-base-100 C		
ID		PAGE	
NAME		DATE	13-FEB-2009

MSP-RMA
夏舒萍
20100601

DACB (cable-up VGA)

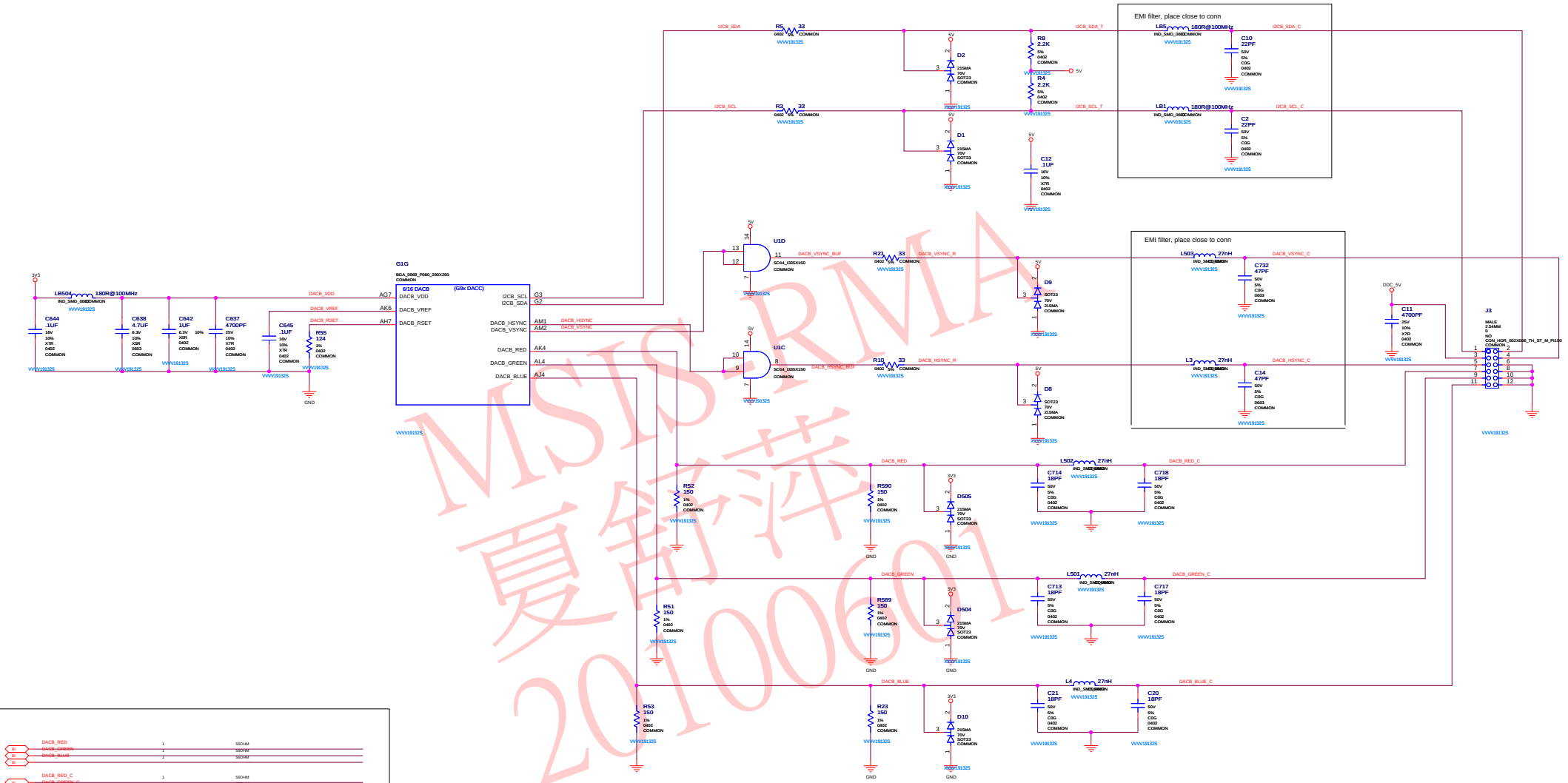

MSI-RMA
夏哲萍
20100601

ASSEMBLY	BASE LEVEL GENERIC SCHEMATIC ONLY, COMMON & NO_STUFF ASSEMBLY NOTES AND BOM NOT FINAL
PAGE DETAIL	DACB (MID DVI-I)

ALL NVIDIA DESIGN SPECIFICATIONS, REFERENCE SPECIFICATIONS, REFERENCE BOARDS, FILES, DRAWINGS, DIAGNOSTICS, LISTS AND OTHER DOCUMENTS OR INFORMATION (TOGETHER AND SEPARATELY, 'MATERIALS') ARE BEING PROVIDED 'AS IS'. THE MATERIALS MAY CONTAIN KNOWN AND UNKNOWN VIOLATIONS OR DEVIATIONS OF INDUSTRY STANDARDS AND SPECIFICATIONS. NVIDIA MAKES NO WARRANTIES, EXPRESSED, IMPLIED, STATUTORY OR OTHERWISE WITH RESPECT TO THE MATERIALS OR OTHERWISE, AND EXPRESSLY DISCLAIMS ALL IMPLIED WARRANTIES INCLUDING, WITHOUT LIMITATION, THE WARRANTIES OF DESIGN, OF NONINFRINGEMENT, MERCHANTABILITY OR FITNESS FOR A PARTICULAR PURPOSE, OR ARISING FROM A COURSE OF DEALING, TRADE USAGE, TRADE PRACTICE, OR INDUSTRY STANDARDS.

NVIDIA CORPORATION
2701 SAN TOMAS EXPRESSWAY
SANTA CLARA, CA 95050, USA

NV_PN	600-10684-base-100 C		
ID		PAGE	
NAME		DATE	13-FEB-2009

IFP AB (SOUTH DVI-I)

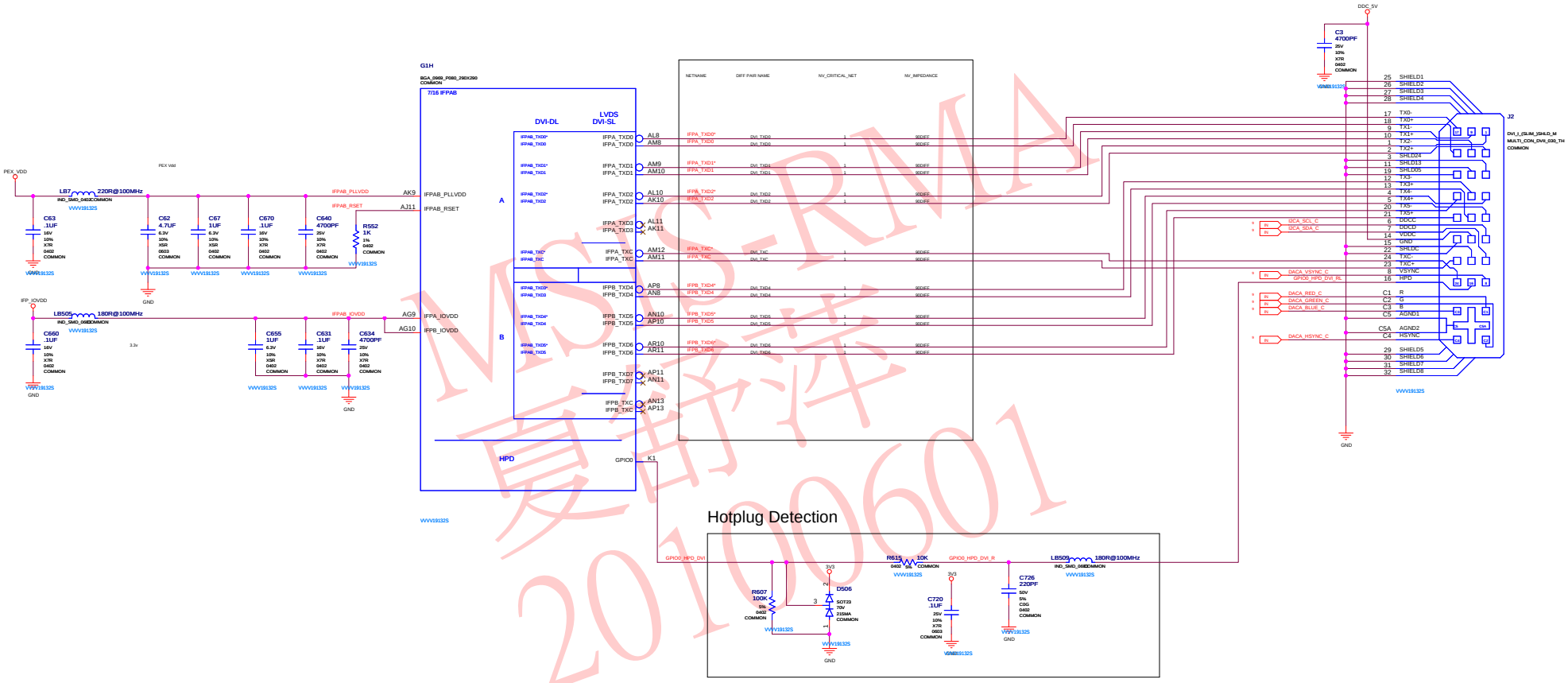

MSI-RMA
夏轩洋
20100601

ASSEMBLY	BASE LEVEL GENERIC SCHEMATIC ONLY, COMMON & NO_STUFF ASSEMBLY NOTES AND BOM NOT FINAL
PAGE DETAIL	IFP AB (SOUTH DVI-I)

ALL NVIDIA DESIGN SPECIFICATIONS, REFERENCE SPECIFICATIONS, REFERENCE BOARDS, FILES, DRAWINGS, DIAGNOSTICS, LISTS AND OTHER DOCUMENTS OR INFORMATION (TOGETHER AND SEPARATELY, 'MATERIALS') ARE BEING PROVIDED 'AS IS'. THE MATERIALS MAY CONTAIN KNOWN AND UNKNOWN VIOLATIONS OR DEVIATIONS OF INDUSTRY STANDARDS AND SPECIFICATIONS. NVIDIA MAKES NO WARRANTIES, EXPRESSED, IMPLIED, STATUTORY OR OTHERWISE WITH RESPECT TO THE MATERIALS OR OTHERWISE, AND EXPRESSLY DISCLAIMS ALL IMPLIED WARRANTIES INCLUDING, WITHOUT LIMITATION, THE WARRANTIES OF DESIGN, OF NONINFRINGEMENT, MERCHANTABILITY OR FITNESS FOR A PARTICULAR PURPOSE, OR ARISING FROM A COURSE OF DEALING, TRADE USAGE, TRADE PRACTICE, OR INDUSTRY STANDARDS.

NVIDIA CORPORATION
2701 SAN TOMAS EXPRESSWAY
SANTA CLARA, CA 95050, USA

NV_PN	600-10684-base-100 C		
ID		PAGE	
NAME		DATE	13-FEB-2009

IFP C (NORTH HDMI)

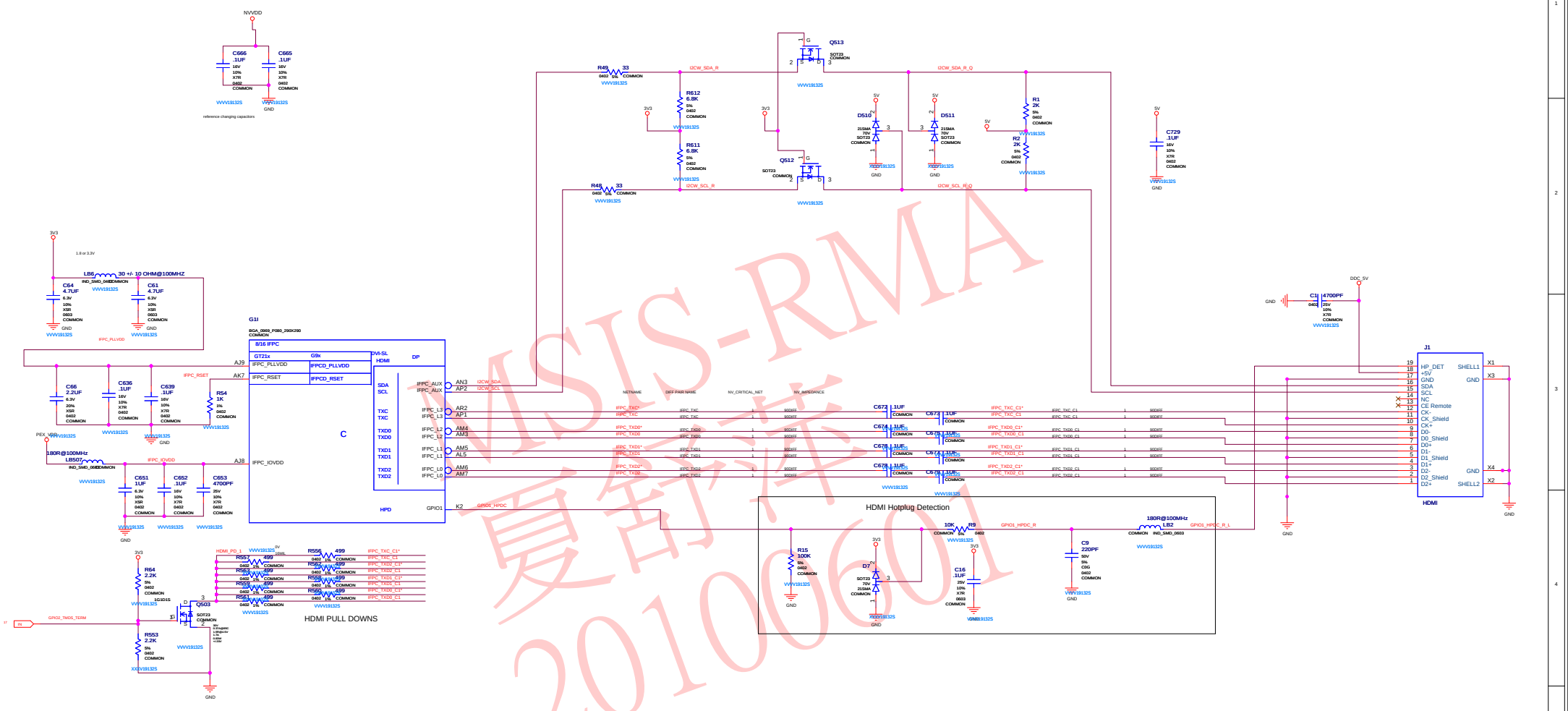

MSIS-RMA
夏舒祥
20100601

ASSEMBLY	BASE LEVEL GENERIC SCHEMATIC ONLY, COMMON & NO_STUFF ASSEMBLY NOTES AND BOM NOT FINAL
PAGE DETAIL	IFP C (NORTH mHDMI)

ALL NVIDIA DESIGN SPECIFICATIONS, REFERENCE SPECIFICATIONS, REFERENCE BOARDS, FILES, DRAWINGS, DIAGNOSTICS, LISTS AND OTHER DOCUMENTS OR INFORMATION (TOGETHER AND SEPARATELY, 'MATERIALS') ARE BEING PROVIDED 'AS IS'. THE MATERIALS MAY CONTAIN KNOWN AND UNKNOWN VIOLATIONS OR DEVIATIONS OF INDUSTRY STANDARDS AND SPECIFICATIONS. NVIDIA MAKES NO WARRANTIES, EXPRESSED, IMPLIED, STATUTORY OR OTHERWISE WITH RESPECT TO THE MATERIALS OR OTHERWISE, AND EXPRESSLY DISCLAIMS ALL IMPLIED WARRANTIES INCLUDING, WITHOUT LIMITATION, THE WARRANTIES OF DESIGN, OF NONINFRINGEMENT, MERCHANTABILITY OR FITNESS FOR A PARTICULAR PURPOSE, OR ARISING FROM A COURSE OF DEALING, TRADE USAGE, TRADE PRACTICE, OR INDUSTRY STANDARDS.

NVIDIA CORPORATION
2701 SAN TOMAS EXPRESSWAY
SANTA CLARA, CA 95050, USA

NV_PN	600-10684-base-100 C		
ID		PAGE	
NAME		DATE	13-FEB-2009

IFP D (UNUSED)

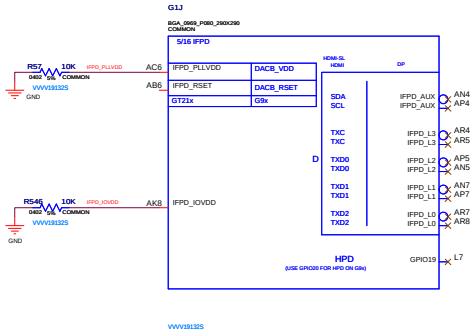

MSIS-RMA
夏舒萍
20100601

NET	PAIR	NV_CRITICAL	IMPEDANCE
IFPE_AUX_BYP	IFPE_AUX_BYP	1	90DIFF
IFPE_AUX_BYP*	IFPE_AUX_BYP	1	90DIFF

ASSEMBLY	BASE LEVEL GENERIC SCHEMATIC ONLY, COMMON & NO_STUFF ASSEMBLY NOTES AND BOM NOT FINAL
PAGE DETAIL	IFP D (UNUSED) & MID DISPLAYPORT

ALL NVIDIA DESIGN SPECIFICATIONS, REFERENCE SPECIFICATIONS, REFERENCE BOARDS, FILES, DRAWINGS, DIAGNOSTICS, LISTS AND OTHER DOCUMENTS OR INFORMATION (TOGETHER AND SEPARATELY, 'MATERIALS') ARE BEING PROVIDED 'AS IS'. THE MATERIALS MAY CONTAIN KNOWN AND UNKNOWN VIOLATIONS OR DEVIATIONS OF INDUSTRY STANDARDS AND SPECIFICATIONS. NVIDIA MAKES NO WARRANTIES, EXPRESSED, IMPLIED, STATUTORY OR OTHERWISE WITH RESPECT TO THE MATERIALS OR OTHERWISE, AND EXPRESSLY DISCLAIMS ALL IMPLIED WARRANTIES INCLUDING, WITHOUT LIMITATION, THE WARRANTIES OF DESIGN, OF NONINFRINGEMENT, MERCHANTABILITY OR FITNESS FOR A PARTICULAR PURPOSE, OR ARISING FROM A COURSE OF DEALING, TRADE USAGE, TRADE PRACTICE, OR INDUSTRY STANDARDS.

NVIDIA CORPORATION
2701 SAN TOMAS EXPRESSWAY
SANTA CLARA, CA 95050, USA

NV_PN	600-10684-base-100 C		
ID		PAGE	
NAME		DATE	13-FEB-2009

IFP EF (unused)

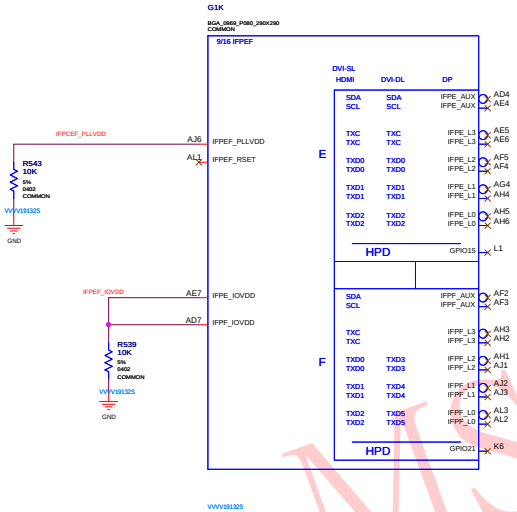

MSIS-RMA
夏舒萍
20100601

NET	PAIR	NV_CRITICAL	IMPEDANCE
IFPEF_TXC* / IFPEF_TXC	IFPEF_TXC	1	90DIFF
IFPE_TXC* / IFPE_TXC	IFPE_TXC	1	90DIFF
IFPE_TXD0* / IFPE_TXD0	IFPE_TXD0	1	90DIFF
IFPE_TXD1* / IFPE_TXD1	IFPE_TXD1	1	90DIFF
IFPE_TXD2* / IFPE_TXD2	IFPE_TXD2	1	90DIFF
IFPF_TXD3* / IFPF_TXD3	IFPF_TXD3	1	90DIFF
IFPF_TXD4* / IFPF_TXD4	IFPF_TXD4	1	90DIFF
IFPF_TXD5* / IFPF_TXD5	IFPF_TXD5	1	90DIFF
IFPEF_TXD3* / IFPEF_TXD3	IFPEF_TXD3	1	90DIFF
IFPEF_TXD4* / IFPEF_TXD4	IFPEF_TXD4	1	90DIFF
IFPEF_TXD5* / IFPEF_TXD5	IFPEF_TXD5	1	90DIFF
IFPEF_TXD0* / IFPEF_TXD0	IFPEF_TXD0	1	90DIFF
IFPEF_TXD1* / IFPEF_TXD1	IFPEF_TXD1	1	90DIFF
IFPEF_TXD2* / IFPEF_TXD2	IFPEF_TXD2	1	90DIFF
IFPE_AUX* / IFPE_AUX	IFPE_AUX	1	90DIFF

ASSEMBLY	BASE LEVEL GENERIC SCHEMATIC ONLY, COMMON & NO_STUFF ASSEMBLY NOTES AND BOM NOT FINAL
PAGE DETAIL	IFP EF (MID DVI-I)

ALL NVIDIA DESIGN SPECIFICATIONS, REFERENCE SPECIFICATIONS, REFERENCE BOARDS, FILES, DRAWINGS, DIAGNOSTICS, LISTS AND OTHER DOCUMENTS OR INFORMATION (TOGETHER AND SEPARATELY, 'MATERIALS') ARE BEING PROVIDED 'AS IS'. THE MATERIALS MAY CONTAIN KNOWN AND UNKNOWN VIOLATIONS OR DEVIATIONS OF INDUSTRY STANDARDS AND SPECIFICATIONS. NVIDIA MAKES NO WARRANTIES, EXPRESSED, IMPLIED, STATUTORY OR OTHERWISE WITH RESPECT TO THE MATERIALS OR OTHERWISE, AND EXPRESSLY DISCLAIMS ALL IMPLIED WARRANTIES INCLUDING, WITHOUT LIMITATION, THE WARRANTIES OF DESIGN, OF NONINFRINGEMENT, MERCHANTABILITY OR FITNESS FOR A PARTICULAR PURPOSE, OR ARISING FROM A COURSE OF DEALING, TRADE USAGE, TRADE PRACTICE, OR INDUSTRY STANDARDS.

NVIDIA CORPORATION
2701 SAN TOMAS EXPRESSWAY
SANTA CLARA, CA 95050, USA

NV_PN	600-10684-base-100 C		
ID		PAGE	
NAME		DATE	13-FEB-2009

MIOA & MIOB

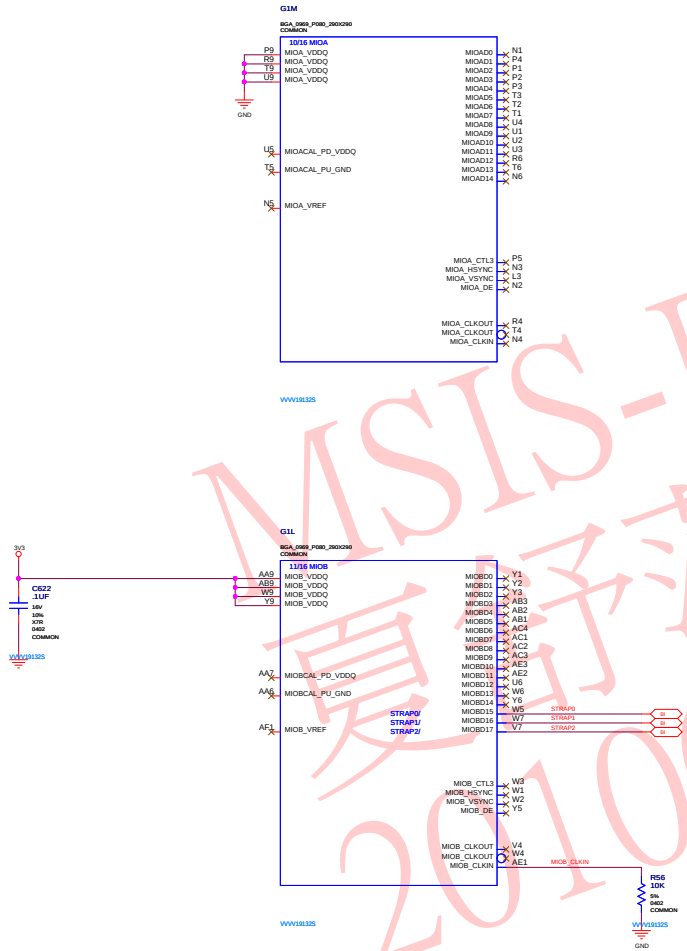

MSIS-RMA
夏舒萍
20100601

ASSEMBLY	BASE LEVEL GENERIC SCHEMATIC ONLY, COMMON & NO_STUFF ASSEMBLY NOTES AND BOM NOT FINAL
PAGE DETAIL	MIOA & MIOB

ALL NVIDIA DESIGN SPECIFICATIONS, REFERENCE SPECIFICATIONS, REFERENCE BOARDS, FILES, DRAWINGS, DIAGNOSTICS, LISTS AND OTHER DOCUMENTS OR INFORMATION (TOGETHER AND SEPARATELY, 'MATERIALS') ARE BEING PROVIDED 'AS IS'. THE MATERIALS MAY CONTAIN KNOWN AND UNKNOWN VIOLATIONS OR DEVIATIONS OF INDUSTRY STANDARDS AND SPECIFICATIONS. NVIDIA MAKES NO WARRANTIES, EXPRESSED, IMPLIED, STATUTORY OR OTHERWISE WITH RESPECT TO THE MATERIALS OR OTHERWISE, AND EXPRESSLY DISCLAIMS ALL IMPLIED WARRANTIES INCLUDING, WITHOUT LIMITATION, THE WARRANTIES OF DESIGN, OF NONINFRINGEMENT, MERCHANTABILITY OR FITNESS FOR A PARTICULAR PURPOSE, OR ARISING FROM A COURSE OF DEALING, TRADE USAGE, TRADE PRACTICE, OR INDUSTRY STANDARDS.

NVIDIA CORPORATION
2701 SAN TOMAS EXPRESSWAY
SANTA CLARA, CA 95050, USA

NV_PN	600-10684-base-100 C		
ID		PAGE	
NAME		DATE	13-FEB-2009

XTAL, MECHANICALS, THERMALS

XTAL/GPU_PLLVDD

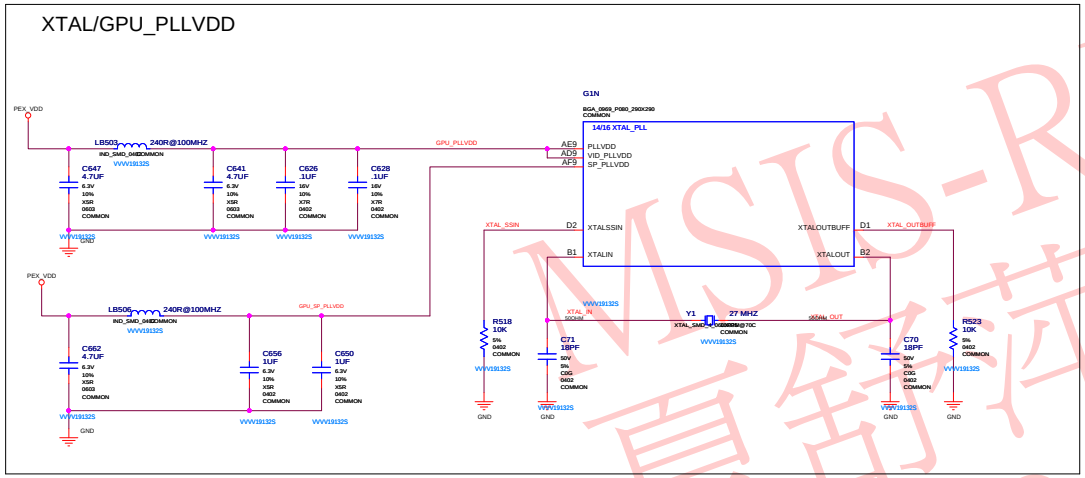

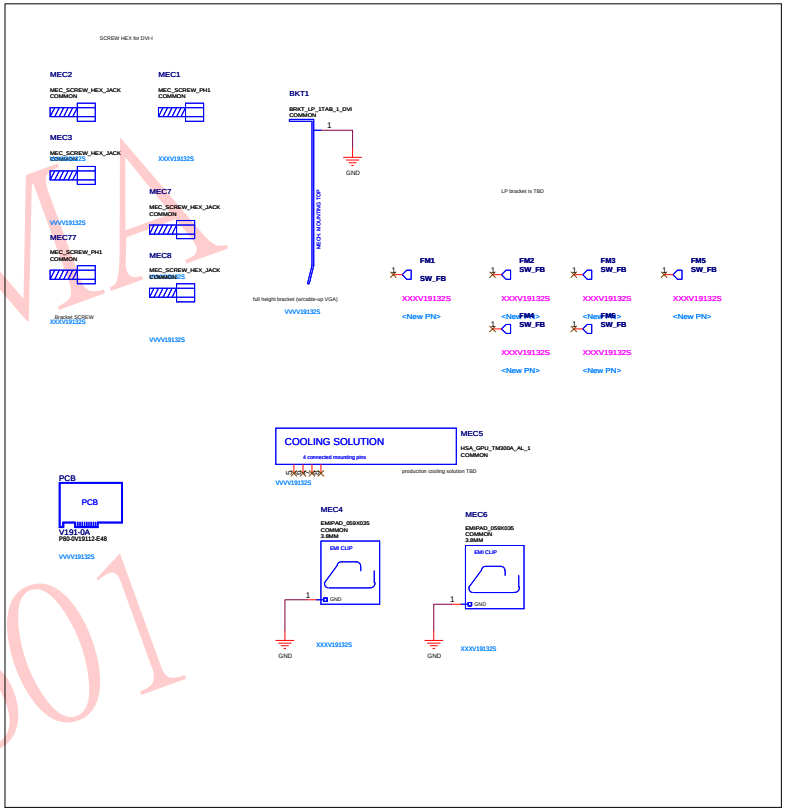

MSIS-RMA
夏舒萍
20100601

ASSEMBLY	BASE LEVEL GENERIC SCHEMATIC ONLY, COMMON & NO_STUFF ASSEMBLY NOTES AND BOM NOT FINAL
PAGE DETAIL	XTAL, MECHANICALS, THERMALS

ALL NVIDIA DESIGN SPECIFICATIONS, REFERENCE SPECIFICATIONS, REFERENCE BOARDS, FILES, DRAWINGS, DIAGNOSTICS, LISTS AND OTHER DOCUMENTS OR INFORMATION (TOGETHER AND SEPARATELY, 'MATERIALS') ARE BEING PROVIDED 'AS IS'. THE MATERIALS MAY CONTAIN KNOWN AND UNKNOWN VIOLATIONS OR DEVIATIONS OF INDUSTRY STANDARDS AND SPECIFICATIONS. NVIDIA MAKES NO WARRANTIES, EXPRESSED, IMPLIED, STATUTORY OR OTHERWISE WITH RESPECT TO THE MATERIALS OR OTHERWISE, AND EXPRESSLY DISCLAIMS ALL IMPLIED WARRANTIES INCLUDING, WITHOUT LIMITATION, THE WARRANTIES OF DESIGN, OF NONINFRINGEMENT, MERCHANTABILITY OR FITNESS FOR A PARTICULAR PURPOSE, OR ARISING FROM A COURSE OF DEALING, TRADE USAGE, TRADE PRACTICE, OR INDUSTRY STANDARDS.

NVIDIA CORPORATION
2701 SAN TOMAS EXPRESSWAY
SANTA CLARA, CA 95050, USA

NV_PN	600-10684-base-100 C		
ID		PAGE	
NAME		DATE	13-FEB-2009

FAN CONTROL, GPIO, JTAG

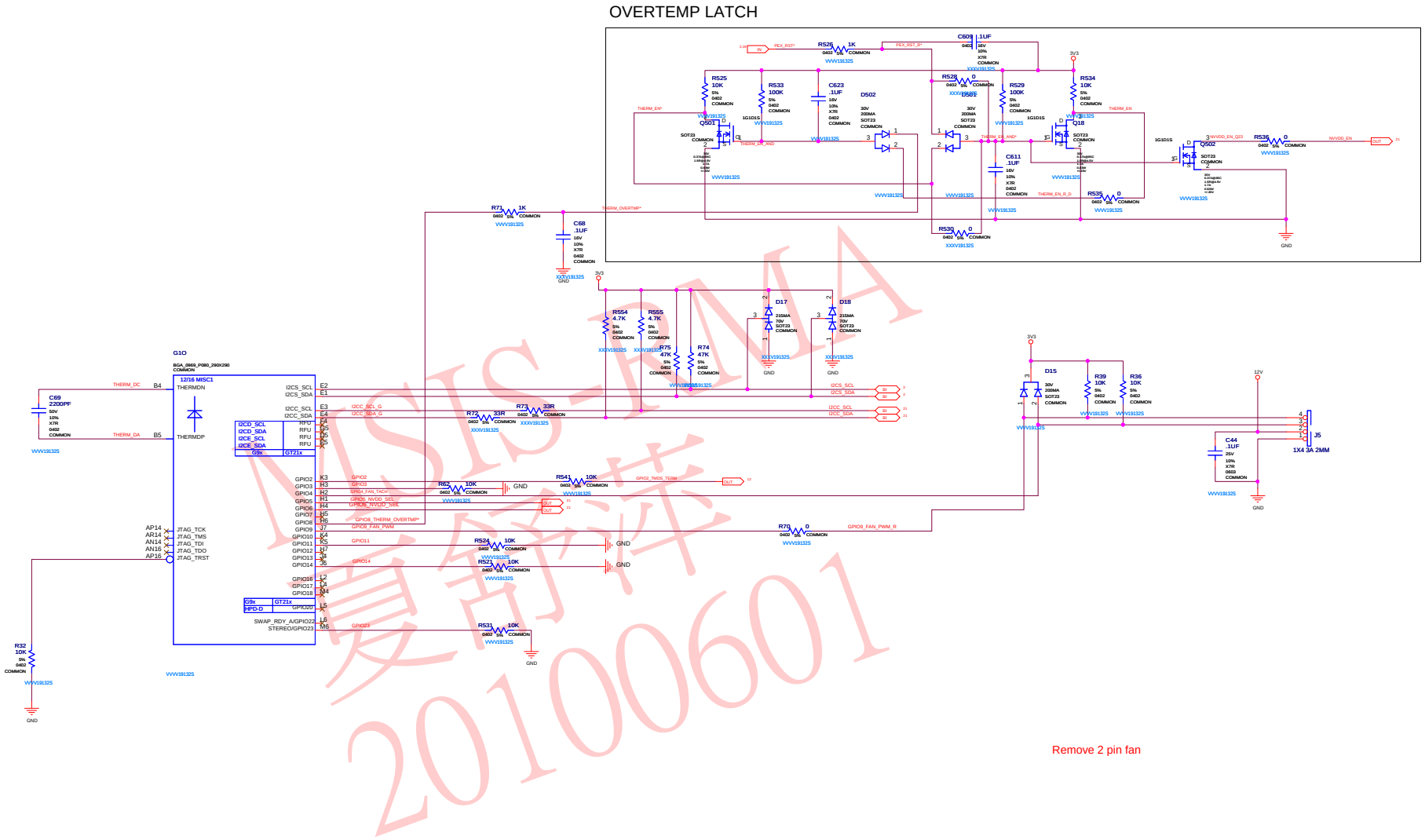

NSIS-PMA
复部法
20100601

ASSEMBLY	BASE LEVEL GENERIC SCHEMATIC ONLY, COMMON & NO_STUFF ASSEMBLY NOTES AND BOM NOT FINAL
PAGE DETAIL	FAN CONTROL, GPIO, JTAG

ALL NVIDIA DESIGN SPECIFICATIONS, REFERENCE SPECIFICATIONS, REFERENCE BOARDS, FILES, DRAWINGS, DIAGNOSTICS, LISTS AND OTHER DOCUMENTS OR INFORMATION (TOGETHER AND SEPARATELY, 'MATERIALS') ARE BEING PROVIDED 'AS IS'. THE MATERIALS MAY CONTAIN KNOWN AND UNKNOWN VIOLATIONS OR DEVIATIONS OF INDUSTRY STANDARDS AND SPECIFICATIONS. NVIDIA MAKES NO WARRANTIES, EXPRESSED, IMPLIED, STATUTORY OR OTHERWISE WITH RESPECT TO THE MATERIALS OR OTHERWISE, AND EXPRESSLY DISCLAIMS ALL IMPLIED WARRANTIES INCLUDING, WITHOUT LIMITATION, THE WARRANTIES OF DESIGN, OF NONINFRINGEMENT, MERCHANTABILITY OR FITNESS FOR A PARTICULAR PURPOSE, OR ARISING FROM A COURSE OF DEALING, TRADE USAGE, TRADE PRACTICE, OR INDUSTRY STANDARDS.

NVIDIA CORPORATION
2701 SAN TOMAS EXPRESSWAY
SANTA CLARA, CA 95050, USA

NV_PN	600-10684-base-100 C		
ID		PAGE	
NAME		DATE	13-FEB-2009

BIOS ROM, HDCP ROM, STRAPPING OPTIONS

STRAPPING OPTIONS

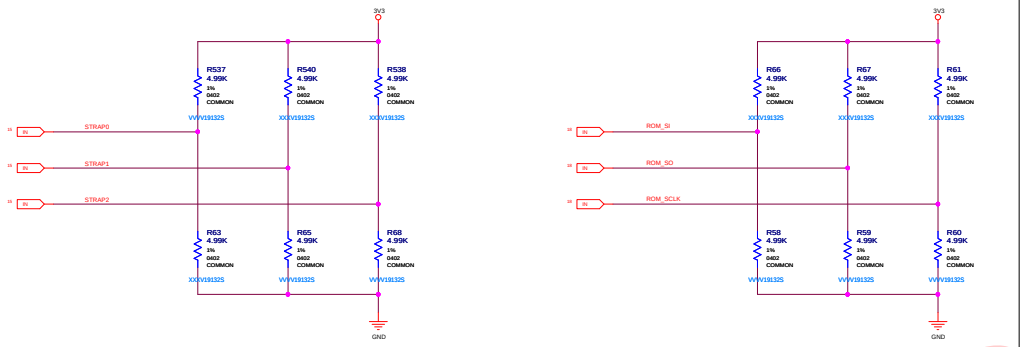

Strap0	USER[3:0]	EDID: 1111	45k pullup
Strap1	3GIOPADCFG[3:0]	Desktop: 0000	5k pulldown
Strap2	PCI_DEVID[3:0]	GT216-350: 0A20	5k pulldown
ROM_SI	RAMCFG[3:0]	64Mx16 DDR3 Hynix: 0010 64Mx16 DDR3 Samsung: 0011	15k pulldown 20k pulldown
ROM_SO	3: XCLK_417 2: FB[] 1: SMB_ALT_ADDR 0: VGA_DEVICE	0010	10k PD
ROM_SCLK	3: PCI_DEV_EXT 2: SUB_VENDOR 1: SLOT_CLK_CFG 0: PEX_PLL_EN_TERM100	0110	35k PD

0: 5k PD	1: 10k PD	2: 15k PD	3: 20k PD
4: 25k PD	5: 30k PD	6: 35k PD	7: 45k PD
8: 5k PU	9: 10k PU	10: 15k PU	11: 20k PU
12: 25k PU	13: 30k PU	14: 35k PU	15: 45k PU

MSIS-RMA
官样
20100601

BIOS ROM(serial)

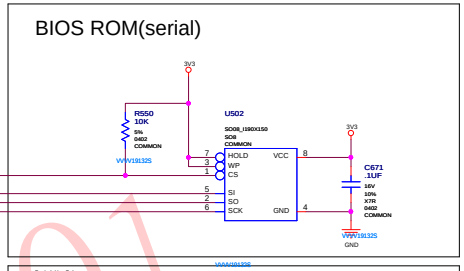

HDCP I2C EEROM

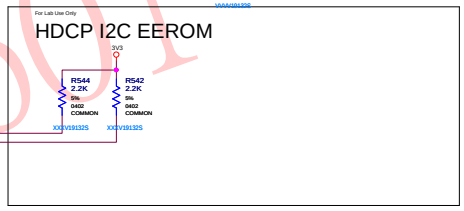

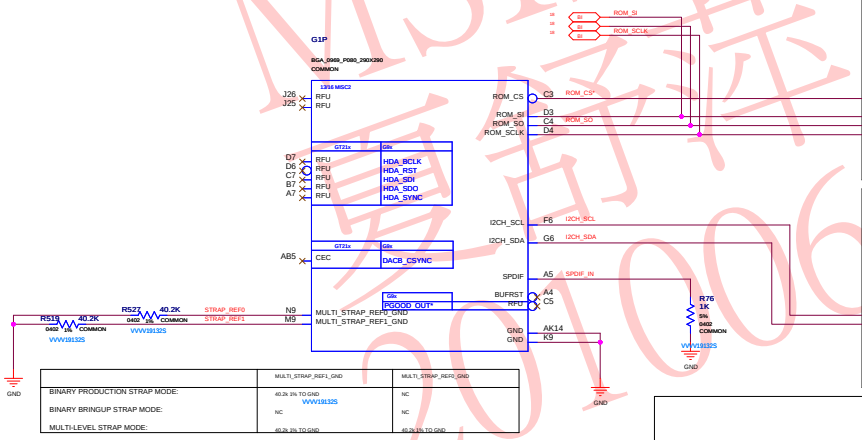

	MULTI_STRAP_REF1_GND	MULTI_STRAP_REF0_GND
BINARY PRODUCTION STRAP MODE:	40.2k 1% TO GND	NC
BINARY BRINGUP STRAP MODE:	NC	NC
MULTI-LEVEL STRAP MODE:	40.2k 1% TO GND	40.2k 1% TO GND

INFOROM

I2C ADDRESS: 0XA8

For Lab Use Only

ASSEMBLY	BASE LEVEL GENERIC SCHEMATIC ONLY, COMMON & NO_STUFF ASSEMBLY NOTES AND BOM NOT FINAL
PAGE DETAIL	BIOS ROM, HDCP ROM, STRAPPING OPTIONS

ALL NVIDIA DESIGN SPECIFICATIONS, REFERENCE SPECIFICATIONS, REFERENCE BOARDS, FILES, DRAWINGS, DIAGNOSTICS, LISTS AND OTHER DOCUMENTS OR INFORMATION (TOGETHER AND SEPARATELY, 'MATERIALS') ARE BEING PROVIDED 'AS IS'. THE MATERIALS MAY CONTAIN KNOWN AND UNKNOWN VIOLATIONS OR DEVIATIONS OF INDUSTRY STANDARDS AND SPECIFICATIONS. NVIDIA MAKES NO WARRANTIES, EXPRESSED, IMPLIED, STATUTORY OR OTHERWISE WITH RESPECT TO THE MATERIALS OR OTHERWISE, AND EXPRESSLY DISCLAIMS ALL IMPLIED WARRANTIES INCLUDING, WITHOUT LIMITATION, THE WARRANTIES OF DESIGN, OF NONINFRINGEMENT, MERCHANTABILITY OR FITNESS FOR A PARTICULAR PURPOSE, OR ARISING FROM A COURSE OF DEALING, TRADE USAGE, TRADE PRACTICE, OR INDUSTRY STANDARDS.

NVIDIA CORPORATION
2701 SAN TOMAS EXPRESSWAY
SANTA CLARA, CA 95050, USA

NV_PN	600-10684-base-100 C		
ID		PAGE	
NAME		DATE	13-FEB-2009

LINEAR POWER SUPPLIES

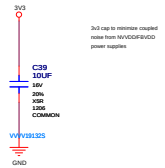

IFP_PLLVDD SUPPLY

VOUT = Vref * (1 + Rbot / Rtop)
1.793V = 0.8V * (1 + 1k / 0.806k)

5V & DDC_5V REGULATOR

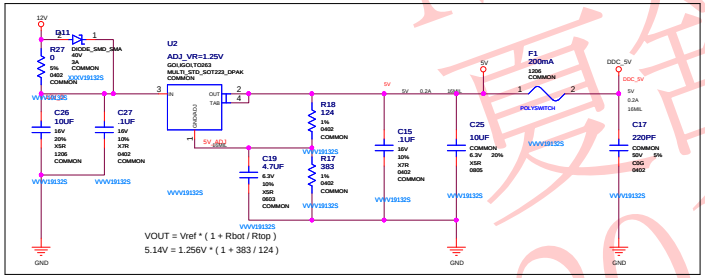

IFP_IOVDD BACKDRIVE PREVENTION

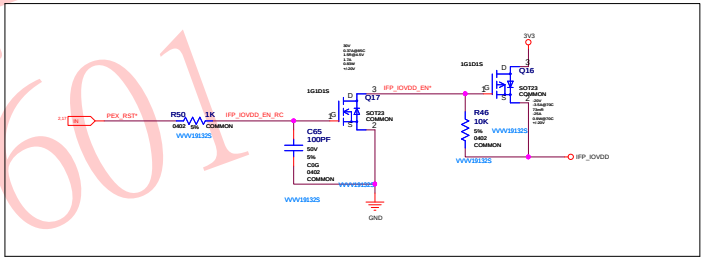

MSIS-RMA
夏舒萍
20100601

ASSEMBLY	BASE LEVEL GENERIC SCHEMATIC ONLY, COMMON & NO_STUFF ASSEMBLY NOTES AND BOM NOT FINAL
PAGE DETAIL	LINEAR POWER SUPPLIES

ALL NVIDIA DESIGN SPECIFICATIONS, REFERENCE SPECIFICATIONS, REFERENCE BOARDS, FILES, DRAWINGS, DIAGNOSTICS, LISTS AND OTHER DOCUMENTS OR INFORMATION (TOGETHER AND SEPARATELY, 'MATERIALS') ARE BEING PROVIDED 'AS IS'. THE MATERIALS MAY CONTAIN KNOWN AND UNKNOWN VIOLATIONS OR DEVIATIONS OF INDUSTRY STANDARDS AND SPECIFICATIONS. NVIDIA MAKES NO WARRANTIES, EXPRESSED, IMPLIED, STATUTORY OR OTHERWISE WITH RESPECT TO THE MATERIALS OR OTHERWISE, AND EXPRESSLY DISCLAIMS ALL IMPLIED WARRANTIES INCLUDING, WITHOUT LIMITATION, THE WARRANTIES OF DESIGN, OF NONINFRINGEMENT, MERCHANTABILITY OR FITNESS FOR A PARTICULAR PURPOSE, OR ARISING FROM A COURSE OF DEALING, TRADE USAGE, TRADE PRACTICE, OR INDUSTRY STANDARDS.

NVIDIA CORPORATION
2701 SAN TOMAS EXPRESSWAY
SANTA CLARA, CA 95050, USA

NV_PN	600-10684-base-100 C		
ID		PAGE	
NAME		DATE	13-FEB-2009

FBVDDQ/PEXVDD POWER SUPPLY

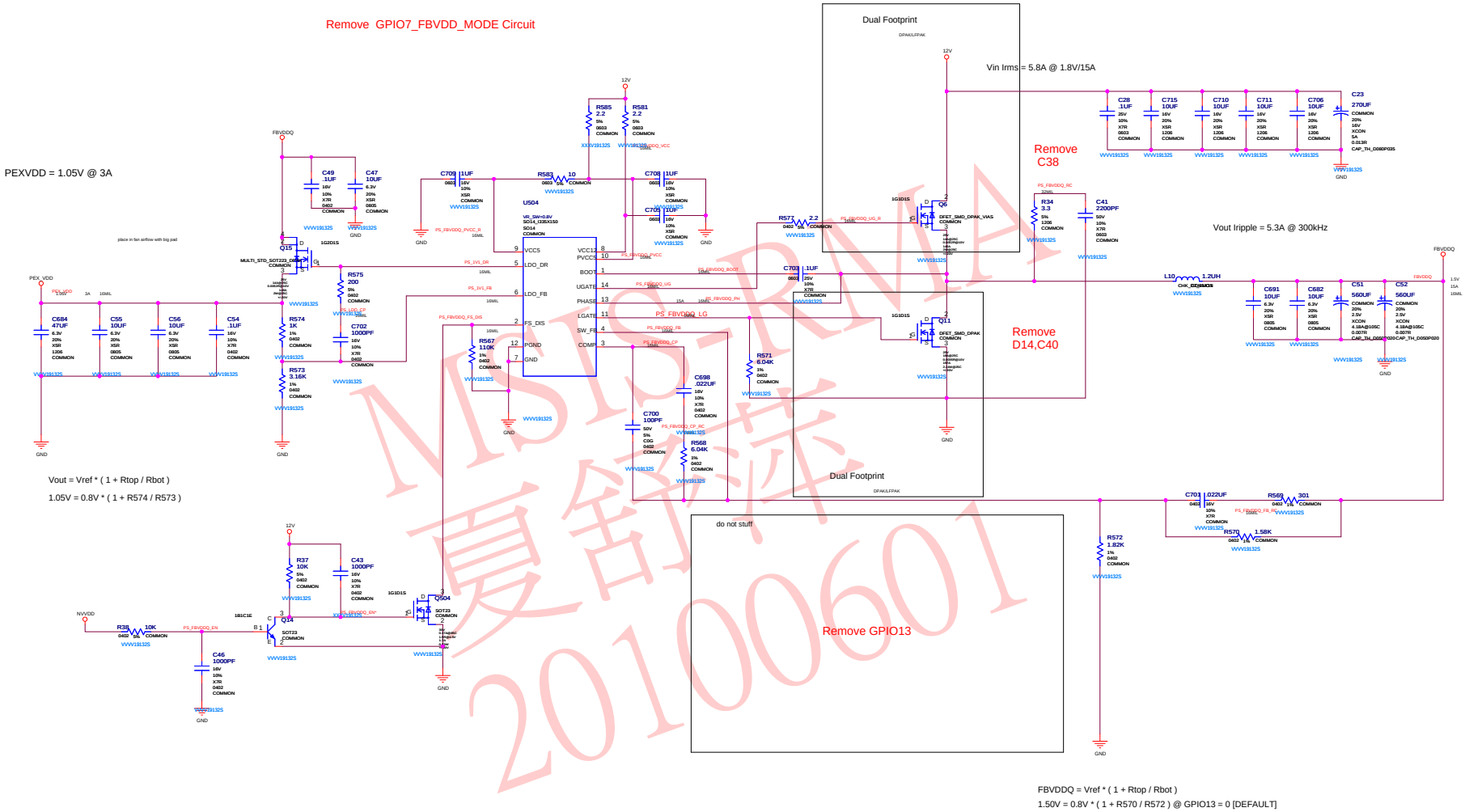

MSI-RMA
复制无效
20100601

ASSEMBLY	BASE LEVEL GENERIC SCHEMATIC ONLY, COMMON & NO_STUFF ASSEMBLY NOTES AND BOM NOT FINAL
PAGE DETAIL	FBVDDQ/PEXVDD POWER SUPPLY

ALL NVIDIA DESIGN SPECIFICATIONS, REFERENCE SPECIFICATIONS, REFERENCE BOARDS, FILES, DRAWINGS, DIAGNOSTICS, LISTS AND OTHER DOCUMENTS OR INFORMATION (TOGETHER AND SEPARATELY, 'MATERIALS') ARE BEING PROVIDED 'AS IS'. THE MATERIALS MAY CONTAIN KNOWN AND UNKNOWN VIOLATIONS OR DEVIATIONS OF INDUSTRY STANDARDS AND SPECIFICATIONS. NVIDIA MAKES NO WARRANTIES, EXPRESSED, IMPLIED, STATUTORY OR OTHERWISE WITH RESPECT TO THE MATERIALS OR OTHERWISE, AND EXPRESSLY DISCLAIMS ALL IMPLIED WARRANTIES INCLUDING, WITHOUT LIMITATION, THE WARRANTIES OF DESIGN, OF NONINFRINGEMENT, MERCHANTABILITY OR FITNESS FOR A PARTICULAR PURPOSE, OR ARISING FROM A COURSE OF DEALING, TRADE USAGE, TRADE PRACTICE, OR INDUSTRY STANDARDS.

NVIDIA CORPORATION
2701 SAN TOMAS EXPRESSWAY
SANTA CLARA, CA 95050, USA

NV_PN	600-10684-base-100 C		
ID		PAGE	
NAME		DATE	13-FEB-2009

NVVDD POWER SUPPLY

NETNAME	MAX_CURRENT	MIN_LINE_WIDTH	VOLTAGE
NVVDD	38A	20MIL	1.05V

Irms = 7.2A @ 1V/38A/Two phase

NVVDD Power Supply

NVVDD = 1V @ 35-40A

I_ripple=6.49A

V_ripple=22mv

300KHz per phase

NVVDD ENABLE

NVVDD = 0.6 * (1 + Rtop/Rbot)

GPIO6	GPIO5	NVVDD
0	0	0.95V (Low perfmode)
1	0	1.0V
1	1	1.05V

MSIS-RMA 夏舒萍 20100601

ASSEMBLY	BASE LEVEL GENERIC SCHEMATIC ONLY, COMMON & NO_STUFF ASSEMBLY NOTES AND BOM NOT FINAL
PAGE DETAIL	NVVDD POWER SUPPLY

ALL NVIDIA DESIGN SPECIFICATIONS, REFERENCE SPECIFICATIONS, REFERENCE BOARDS, FILES, DRAWINGS, DIAGNOSTICS, LISTS AND OTHER DOCUMENTS OR INFORMATION (TOGETHER AND SEPARATELY, 'MATERIALS') ARE BEING PROVIDED 'AS IS'. THE MATERIALS MAY CONTAIN KNOWN AND UNKNOWN VIOLATIONS OR DEVIATIONS OF INDUSTRY STANDARDS AND SPECIFICATIONS. NVIDIA MAKES NO WARRANTIES, EXPRESSED, IMPLIED, STATUTORY OR OTHERWISE WITH RESPECT TO THE MATERIALS OR OTHERWISE, AND EXPRESSLY DISCLAIMS ALL IMPLIED WARRANTIES INCLUDING, WITHOUT LIMITATION, THE WARRANTIES OF DESIGN, OF NONINFRINGEMENT, MERCHANTABILITY OR FITNESS FOR A PARTICULAR PURPOSE, OR ARISING FROM A COURSE OF DEALING, TRADE USAGE, TRADE PRACTICE, OR INDUSTRY STANDARDS.

NVIDIA CORPORATION
2701 SAN TOMAS EXPRESSWAY
SANTA CLARA, CA 95050, USA

NV_PN	600-10684-base-100 C		
ID		PAGE	
NAME		DATE	13-FEB-2009