V075 0A : G78, DDR2 MEMORY 32Mx16

Page 1: P383 Overview

Page 2: PCI Express Interface

Page 3: Frame Buffer Interface

Page 4: Memory 1st bank 0..31

Page 5: Memory 1st bank 32..63

Page 6: DACA

Page 7: DACB

Page 8: TMDS-A,DAC-A

Page 9: TMDS-C,DAC-B

Page 10: MIOA, MIOB Interface

Page 11: STRAPS, Mechanical Parts

Page 12: XTAL, GPIO, BIOS, FAN, JTAG, THERMAL

Page 13: PowerSupplyI: NVVDD, 5V

Page 14: PowerSupplyII: 5V_CLAMP, F3V3

Page 15: PowerSupplyIII: FBVDDQ, FBVTT, PLLVDD

REV HISTORY

A01

SKU	VARIANT	NVPN	ASSEMBLY
B	BASE	600-10383-xxxx-100	BASE LEVEL GENERIC SCHEMATIC ONLY, COMMON & NO_STUFF ASSEMBLY NOTES AND BOM NOT FINAL
1	SKU0000	600-10383-0000-100	P383: G72, 450/333, 128MB/64bit, 16Mx16 DDR2, DMS-59, Desktop
2	SKU0001	600-50383-0000-100	P383: NV44NVS, 275/266, 128MB/64bit, 16Mx16 DDR2, DMS-59, Workstation
3	SKU0002	600-10383-0001-100	P383: G72, 450/333, 64MB/32bit, 16Mx16 DDR2, DMS-59, Desktop
4	SKU0003	600-50383-0001-100	P383: G72NVS, 275/266, 128MB/64bit, 16Mx16 DDR2, DMS-59, Workstation
5	<UNDEFINED>	<UNDEFINED>	<UNDEFINED>
6	<UNDEFINED>	<UNDEFINED>	<UNDEFINED>
7	<UNDEFINED>	<UNDEFINED>	<UNDEFINED>
8	<UNDEFINED>	<UNDEFINED>	<UNDEFINED>
9	<UNDEFINED>	<UNDEFINED>	<UNDEFINED>
10	<UNDEFINED>	<UNDEFINED>	<UNDEFINED>
11	<UNDEFINED>	<UNDEFINED>	<UNDEFINED>
12	<UNDEFINED>	<UNDEFINED>	<UNDEFINED>
13	<UNDEFINED>	<UNDEFINED>	<UNDEFINED>
14	<UNDEFINED>	<UNDEFINED>	<UNDEFINED>
15	<UNDEFINED>	<UNDEFINED>	<UNDEFINED>

ASSEMBLY	BASE LEVEL GENERIC SCHEMATIC ONLY, COMMON & NO_STUFF ASSEMBLY NOTES AND BOM NOT FINAL
PAGE DETAIL	P383 Overview

ALL NVIDIA DESIGN SPECIFICATIONS, REFERENCE SPECIFICATIONS, REFERENCE BOARDS, FILES, DRAWINGS, DIAGNOSTICS, LISTS AND OTHER DOCUMENTS OR INFORMATION (TOGETHER AND SEPARATELY, MATERIALS) ARE BEING PROVIDED 'AS IS'. THE MATERIALS MAY CONTAIN KNOWN AND UNKNOWN VIOLATIONS OR DEVIATIONS OF INDUSTRY STANDARDS AND SPECIFICATIONS. NVIDIA MAKES NO WARRANTIES, EXPRESSED, IMPLIED, STATUTORY OR OTHERWISE WITH RESPECT TO THE MATERIALS OR OTHERWISE, AND EXPRESSLY DISCLAIMS ALL IMPLIED WARRANTIES INCLUDING, WITHOUT LIMITATION, THE WARRANTIES OF DESIGN, OF NONINFRINGEMENT, MERCHANTABILITY OR FITNESS FOR A PARTICULAR PURPOSE, OR ARISING FROM A COURSE OF DEALING, TRADE USAGE, TRADE PRACTICE, OR INDUSTRY STANDARDS.

NVIDIA CORPORATION

2701 SAN TOMAS EXPRESSWAY

SANTA CLARA, CA 95050, USA

NV_PN	600-10383-xxxx-100		
ID		PAGE	
NAME		DATE	5-OCT-2005

PEX-Interface

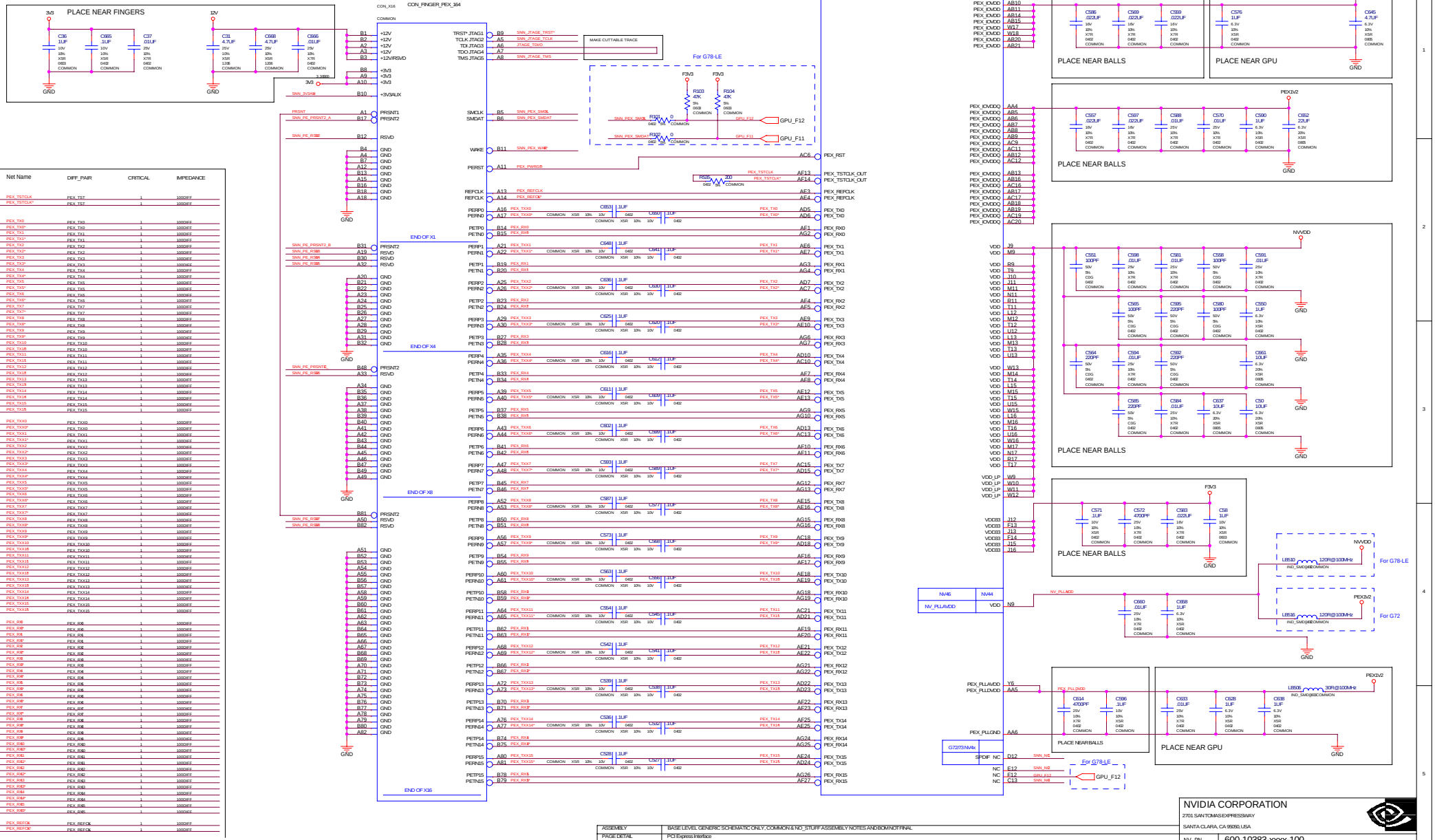

Net Name	DIFF_PAIR	CRITICAL	IMPEDANCE
PEX_TSTCLK	PEX_TST	1	100OHF
PEX_TSTCLK*	PEX_TST	1	100OHF
PEX_TX0	PEX_TX0	1	100OHF
PEX_TX0*	PEX_TX0	1	100OHF
PEX_TX1	PEX_TX1	1	100OHF
PEX_TX1*	PEX_TX1	1	100OHF
PEX_TX2	PEX_TX2	1	100OHF
PEX_TX2*	PEX_TX2	1	100OHF
PEX_TX3	PEX_TX3	1	100OHF
PEX_TX3*	PEX_TX3	1	100OHF
PEX_TX4	PEX_TX4	1	100OHF
PEX_TX4*	PEX_TX4	1	100OHF
PEX_TX5	PEX_TX5	1	100OHF
PEX_TX5*	PEX_TX5	1	100OHF
PEX_TX6	PEX_TX6	1	100OHF
PEX_TX6*	PEX_TX6	1	100OHF
PEX_TX7	PEX_TX7	1	100OHF
PEX_TX7*	PEX_TX7	1	100OHF
PEX_TX8	PEX_TX8	1	100OHF
PEX_TX8*	PEX_TX8	1	100OHF
PEX_TX9	PEX_TX9	1	100OHF
PEX_TX9*	PEX_TX9	1	100OHF
PEX_TX10	PEX_TX10	1	100OHF
PEX_TX10*	PEX_TX10	1	100OHF
PEX_TX11	PEX_TX11	1	100OHF
PEX_TX11*	PEX_TX11	1	100OHF
PEX_TX12	PEX_TX12	1	100OHF
PEX_TX12*	PEX_TX12	1	100OHF
PEX_TX13	PEX_TX13	1	100OHF
PEX_TX13*	PEX_TX13	1	100OHF
PEX_TX14	PEX_TX14	1	100OHF
PEX_TX14*	PEX_TX14	1	100OHF
PEX_TX15	PEX_TX15	1	100OHF
PEX_TX15*	PEX_TX15	1	100OHF
PEX_TX0	PEX_TX0	1	100OHF
PEX_TX0*	PEX_TX0	1	100OHF
PEX_TX1	PEX_TX1	1	100OHF
PEX_TX1*	PEX_TX1	1	100OHF
PEX_TX2	PEX_TX2	1	100OHF
PEX_TX2*	PEX_TX2	1	100OHF
PEX_TX3	PEX_TX3	1	100OHF
PEX_TX3*	PEX_TX3	1	100OHF
PEX_TX4	PEX_TX4	1	100OHF
PEX_TX4*	PEX_TX4	1	100OHF
PEX_TX5	PEX_TX5	1	100OHF
PEX_TX5*	PEX_TX5	1	100OHF
PEX_TX6	PEX_TX6	1	100OHF
PEX_TX6*	PEX_TX6	1	100OHF
PEX_TX7	PEX_TX7	1	100OHF
PEX_TX7*	PEX_TX7	1	100OHF
PEX_TX8	PEX_TX8	1	100OHF
PEX_TX8*	PEX_TX8	1	100OHF
PEX_TX9	PEX_TX9	1	100OHF
PEX_TX9*	PEX_TX9	1	100OHF
PEX_TX10	PEX_TX10	1	100OHF
PEX_TX10*	PEX_TX10	1	100OHF
PEX_TX11	PEX_TX11	1	100OHF
PEX_TX11*	PEX_TX11	1	100OHF
PEX_TX12	PEX_TX12	1	100OHF
PEX_TX12*	PEX_TX12	1	100OHF
PEX_TX13	PEX_TX13	1	100OHF
PEX_TX13*	PEX_TX13	1	100OHF
PEX_TX14	PEX_TX14	1	100OHF
PEX_TX14*	PEX_TX14	1	100OHF
PEX_TX15	PEX_TX15	1	100OHF
PEX_TX15*	PEX_TX15	1	100OHF
PEX_R0	PEX_R0	1	100OHF
PEX_R0*	PEX_R0	1	100OHF
PEX_R4	PEX_R4	1	100OHF
PEX_R4*	PEX_R4	1	100OHF
PEX_R8	PEX_R8	1	100OHF
PEX_R8*	PEX_R8	1	100OHF
PEX_R9	PEX_R9	1	100OHF
PEX_R9*	PEX_R9	1	100OHF
PEX_R14	PEX_R14	1	100OHF
PEX_R14*	PEX_R14	1	100OHF
PEX_R16	PEX_R16	1	100OHF
PEX_R16*	PEX_R16	1	100OHF
PEX_R6	PEX_R6	1	100OHF
PEX_R6*	PEX_R6	1	100OHF
PEX_R9	PEX_R9	1	100OHF
PEX_R9*	PEX_R9	1	100OHF
PEX_R8	PEX_R8	1	100OHF
PEX_R8*	PEX_R8	1	100OHF
PEX_R8	PEX_R8	1	100OHF
PEX_R8*	PEX_R8	1	100OHF
PEX_R9	PEX_R9	1	100OHF
PEX_R9*	PEX_R9	1	100OHF
PEX_R80	PEX_R80	1	100OHF
PEX_R80*	PEX_R80	1	100OHF
PEX_R81	PEX_R81	1	100OHF
PEX_R81*	PEX_R81	1	100OHF
PEX_R82	PEX_R82	1	100OHF
PEX_R82*	PEX_R82	1	100OHF
PEX_R83	PEX_R83	1	100OHF
PEX_R83*	PEX_R83	1	100OHF
PEX_R84	PEX_R84	1	100OHF
PEX_R84*	PEX_R84	1	100OHF
PEX_R85	PEX_R85	1	100OHF
PEX_R85*	PEX_R85	1	100OHF
PEX_REFCIK	PEX_REFCIK	1	100OHF
PEX_REFCIK*	PEX_REFCIK	1	100OHF

ASSEMBLY	BASE LEVEL GENERIC SCHEMATIC ONLY, COMMON & NO_STUFF ASSEMBLY NOTES AND BOM NOT FINAL
PAGE DETAIL	PCI Express Interface

ALL NVIDIA DESIGN SPECIFICATIONS, REFERENCE SPECIFICATIONS, REFERENCE BOARDS, FILES, DRAWINGS, DIAGNOSTICS, LISTS AND OTHER DOCUMENTS OR INFORMATION (TOGETHER AND SEPARATELY, "MATERIALS") ARE BEING PROVIDED "AS IS". THE MATERIALS MAY CONTAIN KNOWN AND UNKNOWN VIOLATIONS OR DEVIATIONS OF INDUSTRY STANDARDS AND SPECIFICATIONS. NVIDIA MAKES NO WARRANTIES, EXPRESSED, IMPLIED, STATUTORY OR OTHERWISE WITH RESPECT TO THE MATERIALS OR OTHERWISE, AND EXPRESSLY DISCLAIMS ALL IMPLIED WARRANTIES INCLUDING, WITHOUT LIMITATION, THE WARRANTIES OF DESIGN, OF NONINFRINGEMENT, MERCHANTABILITY OR FITNESS FOR A PARTICULAR PURPOSE, OR ARISING FROM A COURSE OF DEALING, TRADE USAGE, TRADE PRACTICE, OR INDUSTRY STANDARDS.

NVIDIA CORPORATION
2701 SANTOMAS EXPRESSWAY
SANTA CLARA, CA 95050 USA

NV_PN	600-10383-xxxx-100		
ID		PAGE	
NAME		DATE	5-OCT-2005

GPU: FB-Interface

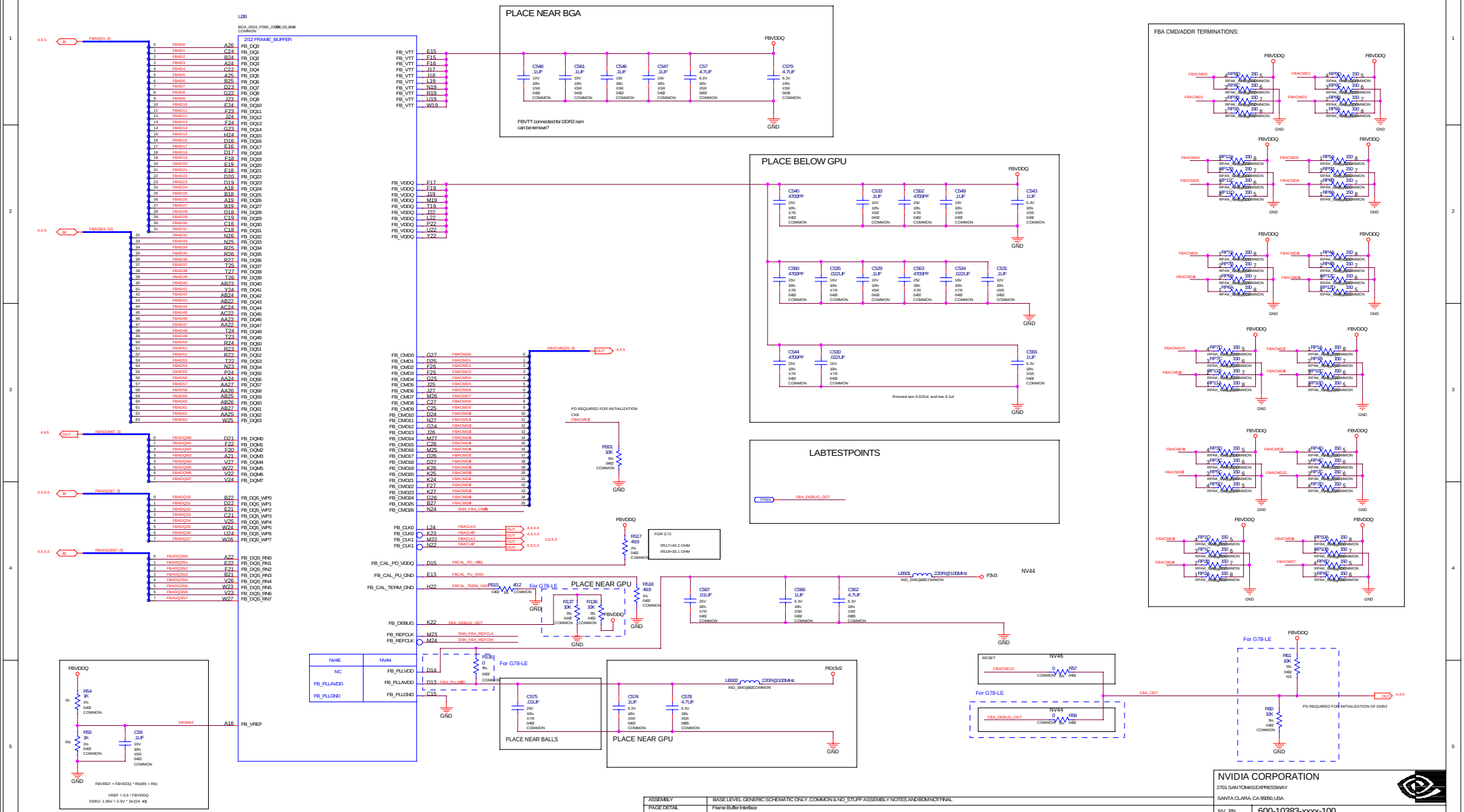

NV46	NV44
NC	FB_PLLAVDD
FB_PLLAVDD	FB_PLLAVDD
FB_PLLGND	FB_PLLGND

ASSEMBLY	BASE LEVEL GENERIC SCHEMATIC ONLY, COMMON & NO_STUFF ASSEMBLY NOTES AND BOM NOT FINAL
PAGE DETAIL	Frame Buffer Interface

ALL NVIDIA DESIGN SPECIFICATIONS, REFERENCE SPECIFICATIONS, REFERENCE BOARDS, FILES, DRAWINGS, DIAGNOSTICS, LISTS AND OTHER DOCUMENTS OR INFORMATION (TOGETHER AND SEPARATELY, "MATERIALS") ARE BEING PROVIDED "AS IS". THE MATERIALS MAY CONTAIN KNOWN AND UNKNOWN VIOLATIONS OR DEVIATIONS OF INDUSTRY STANDARDS AND SPECIFICATIONS. NVIDIA MAKES NO WARRANTIES, EXPRESSED, IMPLIED, STATUTORY OR OTHERWISE WITH RESPECT TO THE MATERIALS OR OTHERWISE, AND EXPRESSLY DISCLAIMS ALL IMPLIED WARRANTIES INCLUDING, WITHOUT LIMITATION, THE WARRANTIES OF DESIGN, OF NONINFRINGEMENT, MERCHANTABILITY OR FITNESS FOR A PARTICULAR PURPOSE, OR ARISING FROM A COURSE OF DEALING, TRADE USAGE, TRADE PRACTICE, OR INDUSTRY STANDARDS.

NVIDIA CORPORATION
2701 SANTOMAS EXPRESSWAY
SANTA CLARA, CA 95050 USA

NV_PN	600-10383-xxxx-100		
ID		PAGE	
NAME		DATE	5-OCT-2005

Memory Bit 0..31

PLACE ALL DISCRETE COMPONENTS AS NEAR AS POSSIBLE TO MEMORY

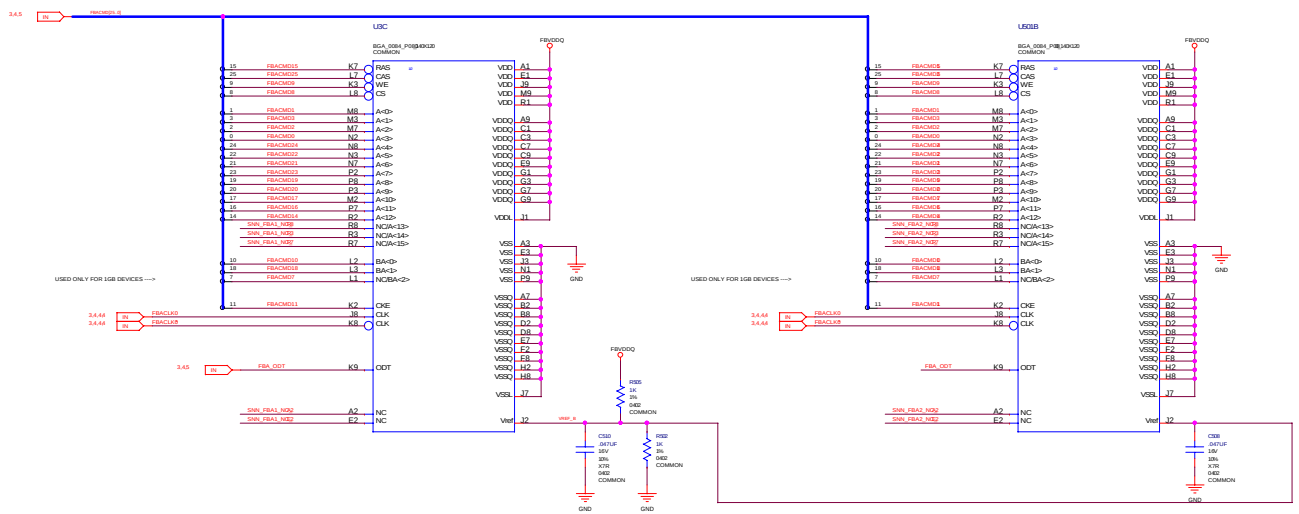

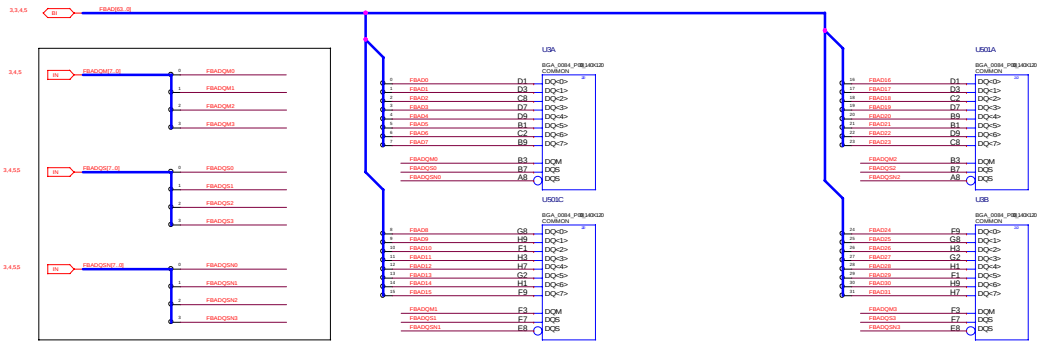

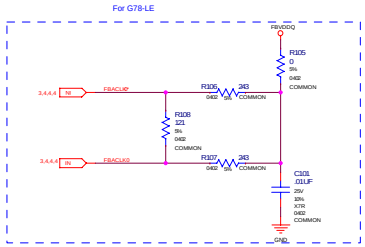

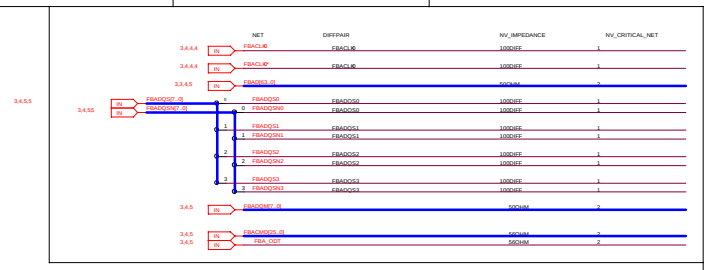

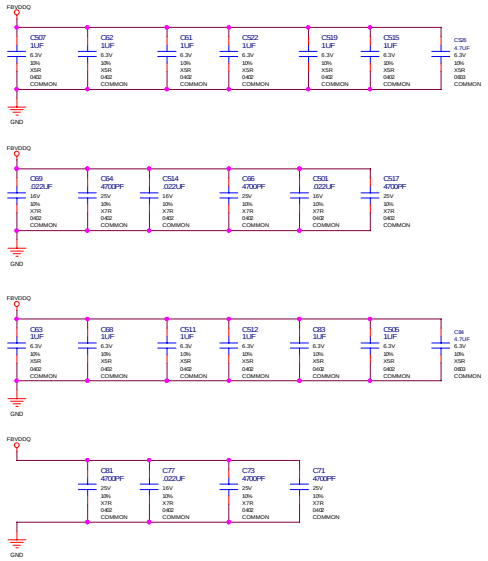

ASSEMBLY	BASE LEVEL GENERIC SCHEMATIC ONLY, COMMON & NO_STUFF ASSEMBLY NOTES AND BOM NOT FINAL
PAGE DETAIL	Memory 1st bank 0..31

ALL NVIDIA DESIGN SPECIFICATIONS, REFERENCE SPECIFICATIONS, REFERENCE BOARDS, FILES, DRAWINGS, DIAGNOSTICS, LISTS AND OTHER DOCUMENTS OR INFORMATION (TOGETHER AND SEPARATELY, "MATERIALS") ARE BEING PROVIDED "AS IS". THE MATERIALS MAY CONTAIN KNOWN AND UNKNOWN VIOLATIONS OR DEVIATIONS OF INDUSTRY STANDARDS AND SPECIFICATIONS. NVIDIA MAKES NO WARRANTIES, EXPRESSED, IMPLIED, STATUTORY OR OTHERWISE WITH RESPECT TO THE MATERIALS OR OTHERWISE, AND EXPRESSLY DISCLAIMS ALL IMPLIED WARRANTIES INCLUDING, WITHOUT LIMITATION, THE WARRANTIES OF DESIGN, OF NONINFRINGEMENT, MERCHANTABILITY OR FITNESS FOR A PARTICULAR PURPOSE, OR ARISING FROM A COURSE OF DEALING, TRADE USAGE, TRADE PRACTICE, OR INDUSTRY STANDARDS.

NVIDIA CORPORATION
2701 SANTOMAS EXPRESSWAY
SANTA CLARA, CA 95050 USA

NV_PN	600-10383-xxxx-100		
ID		PAGE	
NAME		DATE	5-OCT-2005

Memory Bit 32..63

PLACE ALL DISCRETE COMPONENTS AS NEAR AS POSSIBLE TO MEMORY

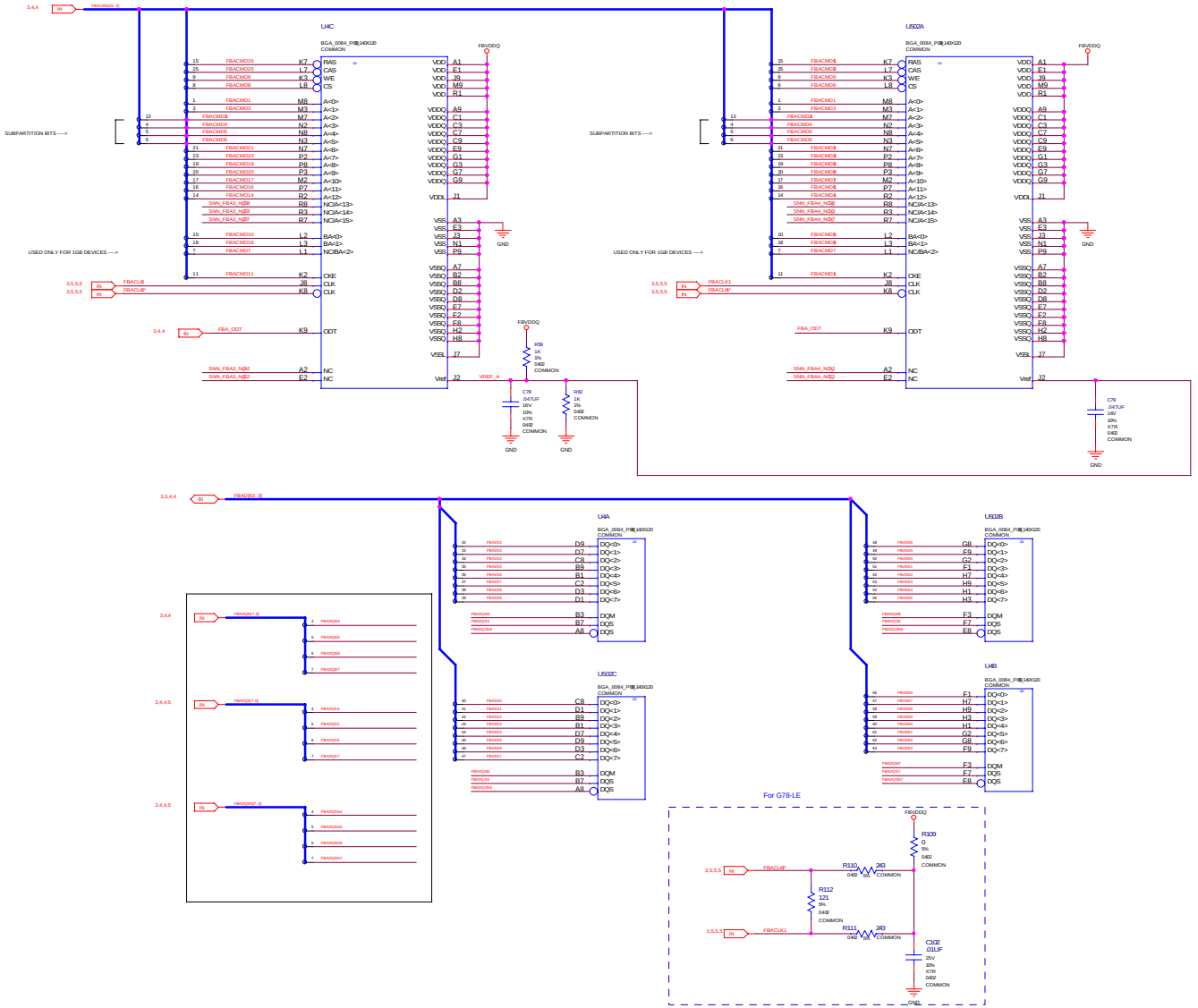

NET	DIFFPAIR	NV_IMPEDANCE	NV_CRITICAL_NET
FBACLK	FBACLK	100DIFF	1
FBACLK*	FBACLK	100DIFF	1
FBADQS4	FBADQS4	100DIFF	1
FBADQSN4	FBADQS4	100DIFF	1
FBADQS5	FBADQS5	100DIFF	1
FBADQSN5	FBADQS5	100DIFF	1
FBADQS6	FBADQS6	100DIFF	1
FBADQSN6	FBADQS6	100DIFF	1
FBADQS7	FBADQS7	100DIFF	1
FBADQSN7	FBADQS7	100DIFF	1

ALL NVIDIA DESIGN SPECIFICATIONS, REFERENCE SPECIFICATIONS, REFERENCE BOARDS, FILES, DRAWINGS, DIAGNOSTICS, LISTS AND OTHER DOCUMENTS OR INFORMATION (TOGETHER AND SEPARATELY, "MATERIALS") ARE BEING PROVIDED "AS IS". THE MATERIALS MAY CONTAIN KNOWN AND UNKNOWN VIOLATIONS OR DEVIATIONS OF INDUSTRY STANDARDS AND SPECIFICATIONS. NVIDIA MAKES NO WARRANTIES, EXPRESSED, IMPLIED, STATUTORY OR OTHERWISE WITH RESPECT TO THE MATERIALS OR OTHERWISE, AND EXPRESSLY DISCLAIMS ALL IMPLIED WARRANTIES INCLUDING, WITHOUT LIMITATION, THE WARRANTIES OF DESIGN, OF NONINFRINGEMENT, MERCHANTABILITY OR FITNESS FOR A PARTICULAR PURPOSE, OR ARISING FROM A COURSE OF DEALING, TRADE USAGE, TRADE PRACTICE, OR INDUSTRY STANDARDS.

ASSEMBLY	BASE LEVEL GENERIC SCHEMATIC ONLY, COMMON & NO_STUFF ASSEMBLY NOTES AND BOM NOT FINAL
PAGE DETAIL	Memory 1st bank 32..63

NVIDIA CORPORATION
2701 SANTOMAS EXPRESSWAY
SANTA CLARA, CA 95050 USA

NV_PN	600-10383-xxxx-100		
ID		PAGE	
NAME		DATE	5-OCT-2005

DAC-A

Net Name	CRITICAL_NET	IMPEDANCE
DACA_HSNC	2	50OHM
DACA_VSNC	2	50OHM
DACA_HSYNCM	2	50OHM
DACA_VSYNCM	2	50OHM
DACA_HSNC_C	2	50OHM
DACA_VSNC_C	2	50OHM
DAC_A_RED_L	1	75OHM
DAC_A_GREEN_L	1	75OHM
DAC_A_BLUE_L	1	75OHM
DACA_RED_C	1	75OHM
DACA_GREEN_C	1	75OHM
DACA_BLUE_C	1	75OHM

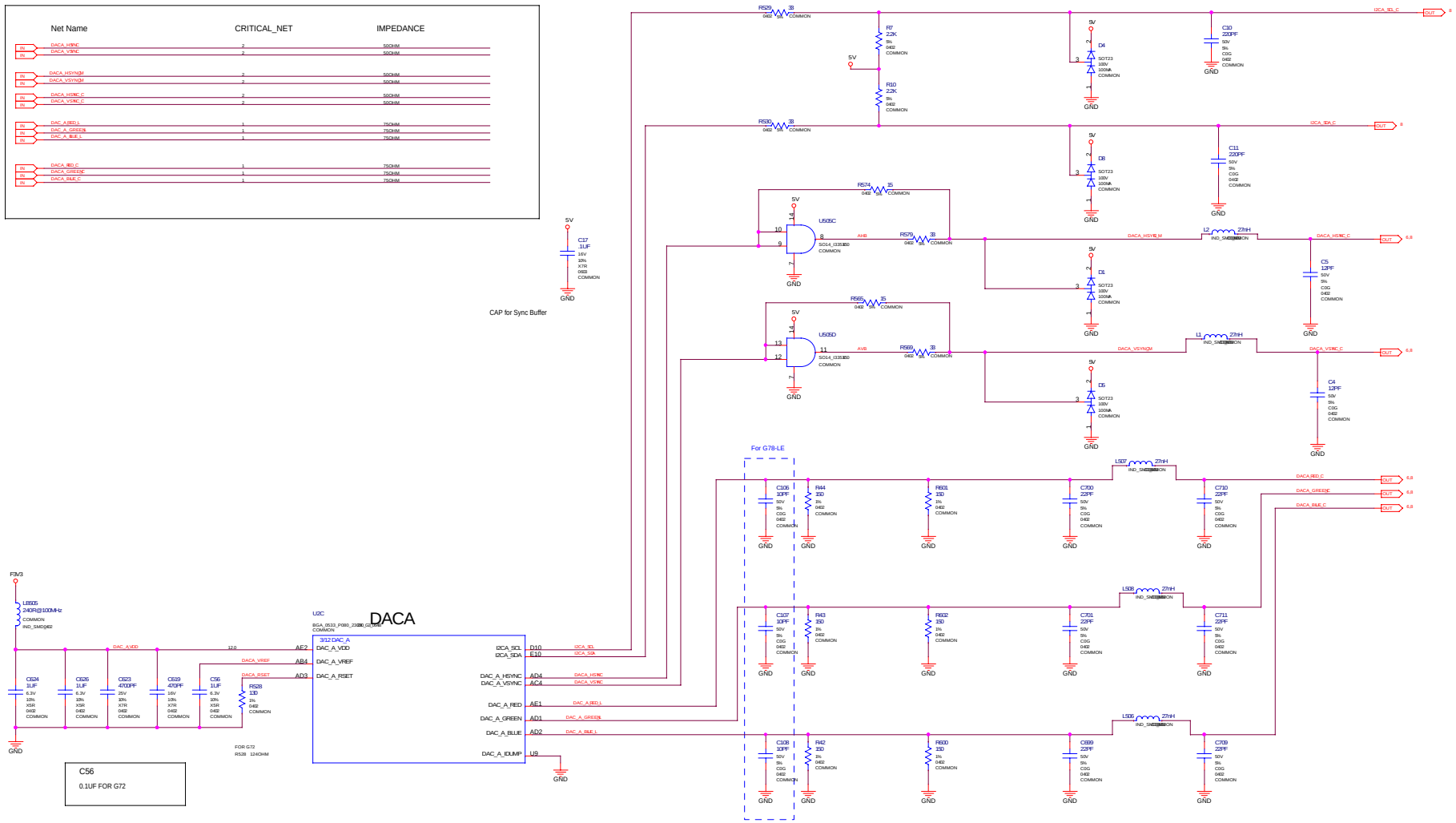

ALL NVIDIA DESIGN SPECIFICATIONS, REFERENCE SPECIFICATIONS, REFERENCE BOARDS, FILES, DRAWINGS, DIAGNOSTICS, LISTS AND OTHER DOCUMENTS OR INFORMATION (TOGETHER AND SEPARATELY, "MATERIALS") ARE BEING PROVIDED "AS IS". THE MATERIALS MAY CONTAIN KNOWN AND UNKNOWN VIOLATIONS OR DEVIATIONS OF INDUSTRY STANDARDS AND SPECIFICATIONS. NVIDIA MAKES NO WARRANTIES, EXPRESSED, IMPLIED, STATUTORY OR OTHERWISE WITH RESPECT TO THE MATERIALS OR OTHERWISE, AND EXPRESSLY DISCLAIMS ALL IMPLIED WARRANTIES INCLUDING, WITHOUT LIMITATION, THE WARRANTIES OF DESIGN, OF NONINFRINGEMENT, MERCHANTABILITY OR FITNESS FOR A PARTICULAR PURPOSE, OR ARISING FROM A COURSE OF DEALING, TRADE USAGE, TRADE PRACTICE, OR INDUSTRY STANDARDS.

ASSEMBLY	BASE LEVEL GENERIC SCHEMATIC ONLY, COMMON & NO_STUFF ASSEMBLY NOTES AND BOM NOT FINAL
PAGE DETAIL	DACA

NVIDIA CORPORATION
2701 SANTOMAS EXPRESSWAY
SANTA CLARA, CA 95050 USA

NV_PN	600-10383-xxxx-100		
ID		PAGE	
NAME		DATE	5-OCT-2005

DAC-B

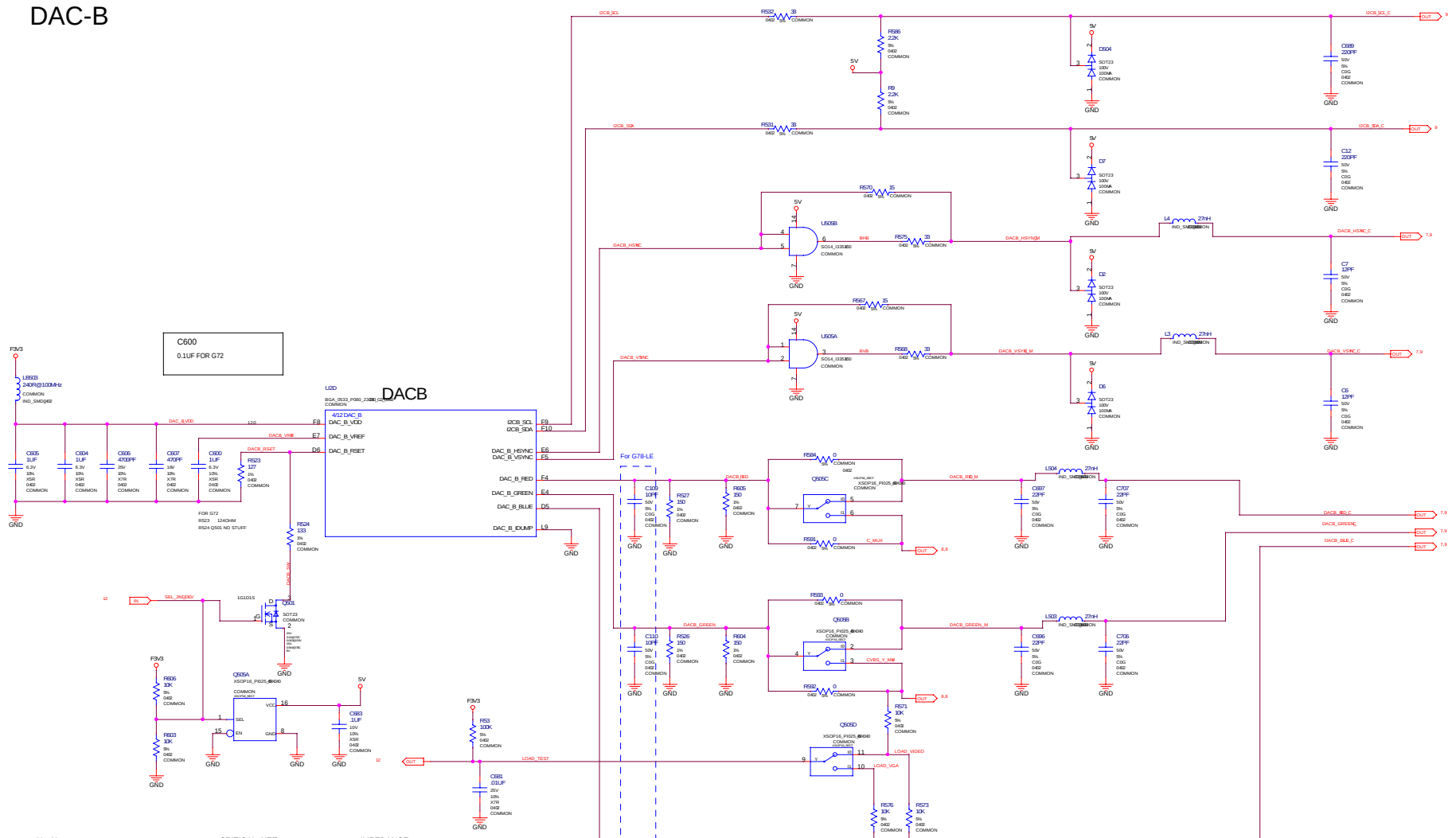

Net Name	MIN_LINE_WIDTH	CRITICAL_NET	IMPEDANCE
DACB_RED		1	75OHM
DACB_GREEN		1	75OHM
DACB_BLUE		1	75OHM
DACB_RIB_M		1	75OHM
DACB_GREEN_M		1	75OHM
DACB_BLUBM		1	75OHM
DACB_VRE	12MIL		
DACB_RSET	12MIL		
DACB_HSNC		2	50OHM
DACB_VSNC		2	50OHM
DACB_HSNC_C		2	50OHM
DACB_VSNC_C		2	50OHM
DACB_HSLYEM		2	50OHM
DACB_VSYIE_M		2	50OHM
DACB_RED_C		1	75OHM
DACB_GREEDE		1	75OHM
DACB_BLUE_C		1	75OHM

ALL NVIDIA DESIGN SPECIFICATIONS, REFERENCE SPECIFICATIONS, REFERENCE BOARDS, FILES, DRAWINGS, DIAGNOSTICS, LISTS AND OTHER DOCUMENTS OR INFORMATION (TOGETHER AND SEPARATELY, "MATERIALS") ARE BEING PROVIDED "AS IS". THE MATERIALS MAY CONTAIN KNOWN AND UNKNOWN VIOLATIONS OR DEVIATIONS OF INDUSTRY STANDARDS AND SPECIFICATIONS. NVIDIA MAKES NO WARRANTIES, EXPRESSED, IMPLIED, STATUTORY OR OTHERWISE WITH RESPECT TO THE MATERIALS OR OTHERWISE, AND EXPRESSLY DISCLAIMS ALL IMPLIED WARRANTIES INCLUDING, WITHOUT LIMITATION, THE WARRANTIES OF DESIGN, OF NONINFRINGEMENT, MERCHANTABILITY OR FITNESS FOR A PARTICULAR PURPOSE, OR ARISING FROM A COURSE OF DEALING, TRADE USAGE, TRADE PRACTICE, OR INDUSTRY STANDARDS.

Internal TMDS-A, DAC-A

Net Name	Diff	CRITICAL	IMPEDANCE	Voltage
ATXC	ATXC	1	100DIFF	
ATXC*	ATXC	1	100DIFF	
ATXD0	ATXD0	1	100DIFF	
ATXD0*	ATXD0	1	100DIFF	
ATXD1	ATXD1	1	100DIFF	
ATXD1*	ATXD1	1	100DIFF	
ATXD2	ATXD2	1	100DIFF	
ATXD2*	ATXD2	1	100DIFF	
C_MUX		1	75OHM	
CVBS_Y_MM		1	75OHM	
CVBS_OUT		1	75OHM	

Net Name	MIN_LINE_WIDTH	Voltage
IFP_AB/PLLVD	16MIL	3.3V
IFP_AB_VD	16MIL	3.3V

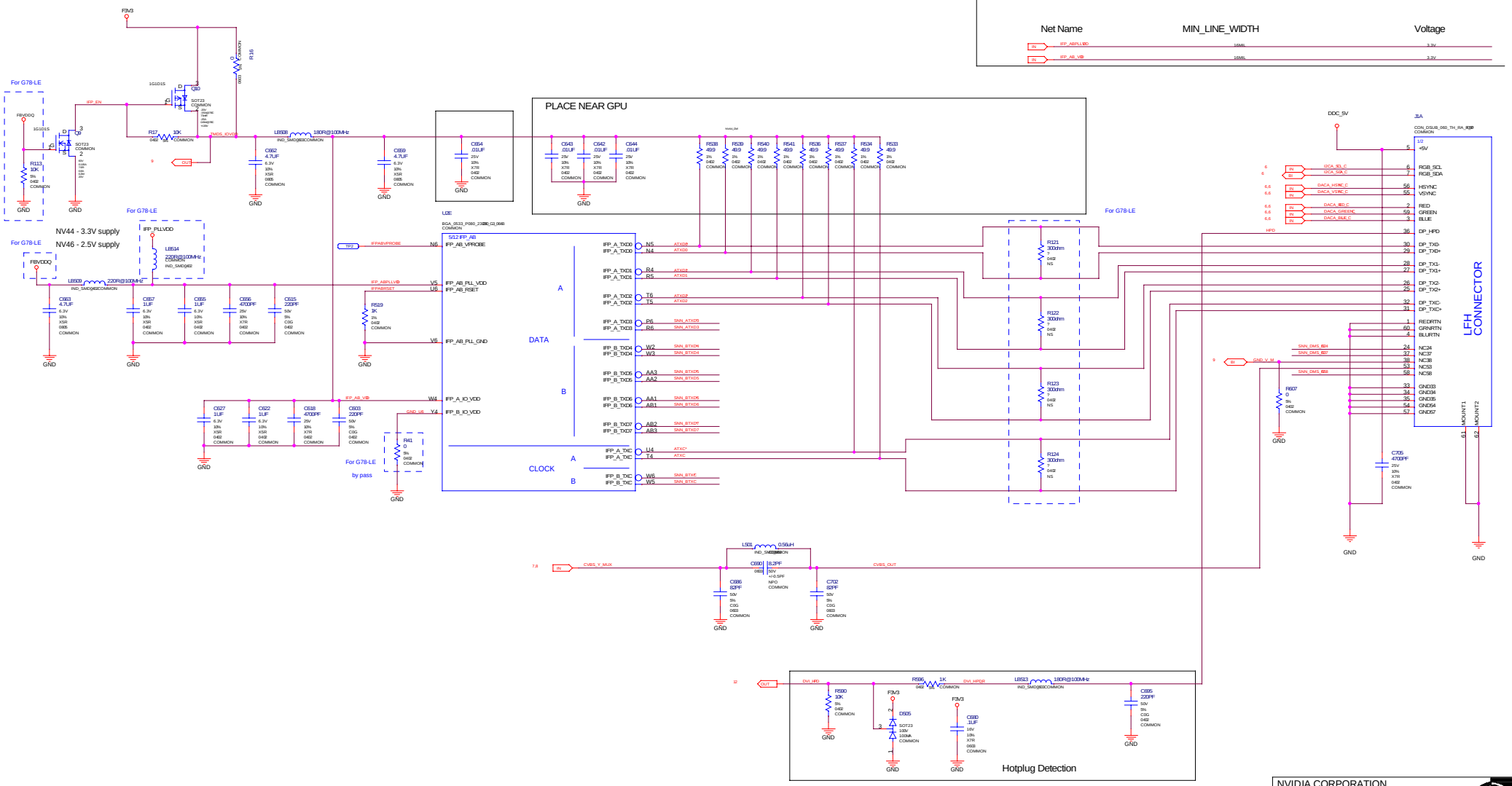

ALL NVIDIA DESIGN SPECIFICATIONS, REFERENCE SPECIFICATIONS, REFERENCE BOARDS, FILES, DRAWINGS, DIAGNOSTICS, LISTS AND OTHER DOCUMENTS OR INFORMATION (TOGETHER AND SEPARATELY, "MATERIALS") ARE BEING PROVIDED "AS IS". THE MATERIALS MAY CONTAIN KNOWN AND UNKNOWN VIOLATIONS OR DEVIATIONS OF INDUSTRY STANDARDS AND SPECIFICATIONS. NVIDIA MAKES NO WARRANTIES, EXPRESSED, IMPLIED, STATUTORY OR OTHERWISE WITH RESPECT TO THE MATERIALS OR OTHERWISE, AND EXPRESSLY DISCLAIMS ALL IMPLIED WARRANTIES INCLUDING, WITHOUT LIMITATION, THE WARRANTIES OF DESIGN, OF NONINFRINGEMENT, MERCHANTABILITY OR FITNESS FOR A PARTICULAR PURPOSE, OR ARISING FROM A COURSE OF DEALING, TRADE USAGE, TRADE PRACTICE, OR INDUSTRY STANDARDS.

Internal TMDS-C, DAC-B

Net Name	Diff	CRITICAL	IMPEDANCE	Voltage
CTXC	CTXC	1	100DIFF	
CTXC*	CTXC*	1	100DIFF	
CTXD0	CTXD0	1	100DIFF	
CTXD0*	CTXD0*	1	100DIFF	
CTXD1	CTXD1	1	100DIFF	
CTXD1*	CTXD1*	1	100DIFF	
CTXD2	CTXD2	1	100DIFF	
CTXD2*	CTXD2*	1	100DIFF	
COUT		1	75OHM	

Net Name	MIN_LINE_WIDTH	Voltage
IFPC_PLLVDD	16MIL	3.3V
IFP_C_VDD	16MIL	3.3V

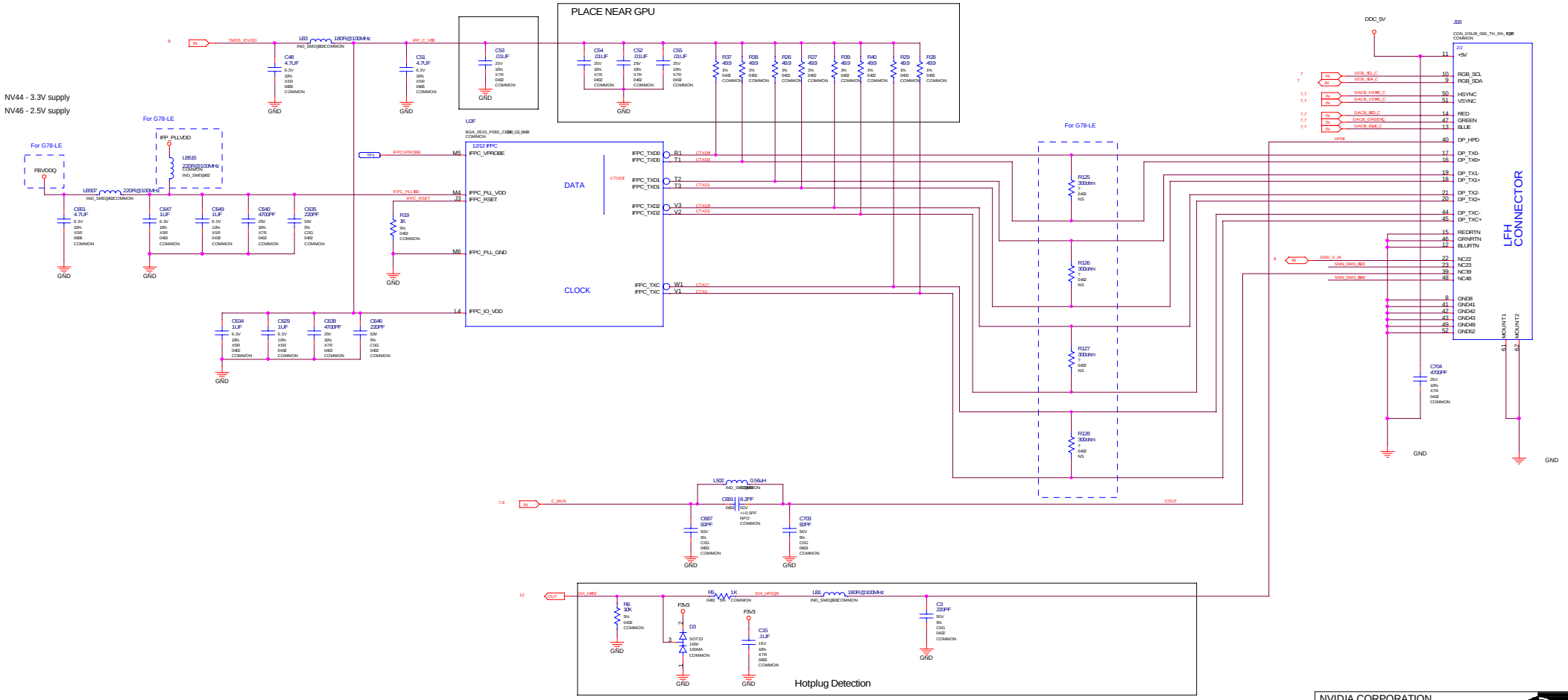

ALL NVIDIA DESIGN SPECIFICATIONS, REFERENCE SPECIFICATIONS, REFERENCE BOARDS, FILES, DRAWINGS, DIAGNOSTICS, LISTS AND OTHER DOCUMENTS OR INFORMATION (TOGETHER AND SEPARATELY, "MATERIALS") ARE BEING PROVIDED "AS IS". THE MATERIALS MAY CONTAIN KNOWN AND UNKNOWN VIOLATIONS OR DEVIATIONS OF INDUSTRY STANDARDS AND SPECIFICATIONS. NVIDIA MAKES NO WARRANTIES, EXPRESSED, IMPLIED, STATUTORY OR OTHERWISE WITH RESPECT TO THE MATERIALS OR OTHERWISE, AND EXPRESSLY DISCLAIMS ALL IMPLIED WARRANTIES INCLUDING, WITHOUT LIMITATION, THE WARRANTIES OF DESIGN, OF NONINFRINGEMENT, MERCHANTABILITY OR FITNESS FOR A PARTICULAR PURPOSE, OR ARISING FROM A COURSE OF DEALING, TRADE USAGE, TRADE PRACTICE, OR INDUSTRY STANDARDS.

ASSEMBLY	BASE LEVEL GENERIC SCHEMATIC ONLY, COMMON & NO_STUFF ASSEMBLY NOTES AND BOM NOT FINAL
PAGE DETAIL	TMDS C,DAC-B

NVIDIA CORPORATION
2701 SANTOMAS EXPRESSWAY
SANTA CLARA, CA 95050 USA

NV_PN	600-10383-xxxx-100		
ID		PAGE	
NAME		DATE	5-OCT-2005

MIOA, MIOB Interface

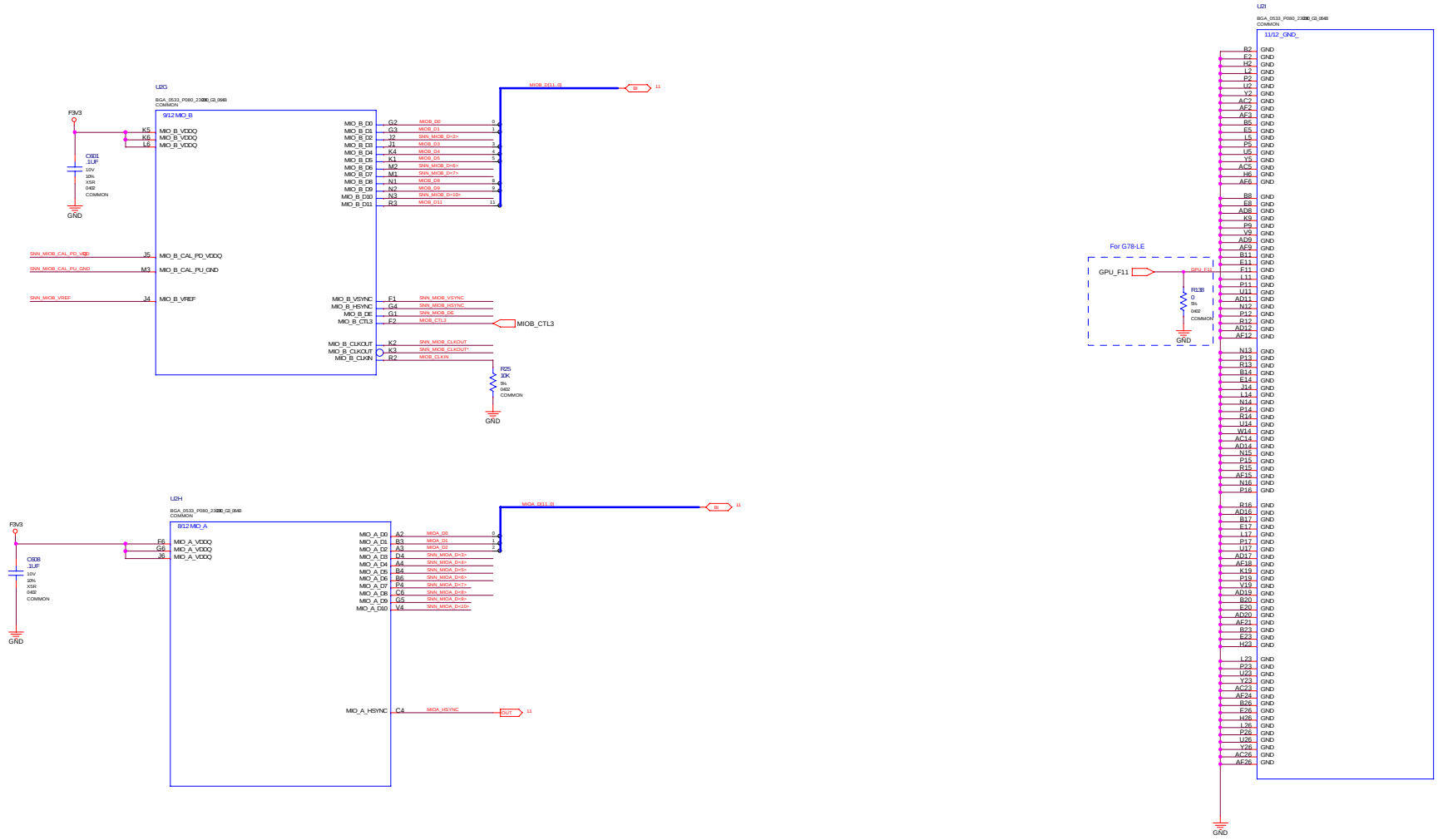

ASSEMBLY	BASE LEVEL GENERIC SCHEMATIC ONLY, COMMON & NO_STUFF ASSEMBLY NOTES AND BOM NOT FINAL
PAGE DETAIL	MIOA, MIOB Interface

ALL NVIDIA DESIGN SPECIFICATIONS, REFERENCE SPECIFICATIONS, REFERENCE BOARDS, FILES, DRAWINGS, DIAGNOSTICS, LISTS AND OTHER DOCUMENTS OR INFORMATION (TOGETHER AND SEPARATELY, "MATERIALS") ARE BEING PROVIDED "AS IS". THE MATERIALS MAY CONTAIN KNOWN AND UNKNOWN VIOLATIONS OR DEVIATIONS OF INDUSTRY STANDARDS AND SPECIFICATIONS. NVIDIA MAKES NO WARRANTIES, EXPRESSED, IMPLIED, STATUTORY OR OTHERWISE WITH RESPECT TO THE MATERIALS OR OTHERWISE, AND EXPRESSLY DISCLAIMS ALL IMPLIED WARRANTIES INCLUDING, WITHOUT LIMITATION, THE WARRANTIES OF DESIGN, OF NONINFRINGEMENT, MERCHANTABILITY OR FITNESS FOR A PARTICULAR PURPOSE, OR ARISING FROM A COURSE OF DEALING, TRADE USAGE, TRADE PRACTICE, OR INDUSTRY STANDARDS.

NVIDIA CORPORATION
2701 SANTOMAS EXPRESSWAY
SANTA CLARA, CA 95050 USA

NV_PN	600-10383-xxxx-100		
ID		PAGE	
NAME		DATE	5-OCT-2005

STRAPS, Mechanical Parts

Bit	Signal	Values
00:	PCI_AD_SWAP	0 REVERSED 1 NORMAL
01:	SUB_VENDOR	0 NO_BIOS 1 READ FROM BIOS
02:	RAM_CFG_0	0000 8MX16DDR2,64bit 0001 16MX16DDR2,64bit SAMSUNG 0010 16MX16DDR2,64bit HYNIX 0011 16MX16DDR2,64bit NANYA 0100 RFU 0101 RFU 0110 32MX8 DDR2,64bit INFINEON 0111 32MX16DDR2,64bit HYNIX 1000 8MX16DDR2,32bit 1001 16MX16DDR2,32bit SAMSUNG 1010 16MX16DDR2,32bit HYNIX 1011 16MX16DDR2,32bit NANYA 1100 RFU 1101 RFU 1110 RFU 1111 32MX16DDR2,32bit
03:	RAM_CFG_1	
04:	RAM_CFG_2	
05:	RAM_CFG_3	
06:	CRYSTAL_0	00 13.500 MHz 01 14.318180 MHz 10 27.000 MHz 11 UNKNOWN
22:	CRYSTAL_1	
07:	TV_MODE_0	00 SECAM 01 NTSC 10 PAL 11 CRT
08:	TV_MODE_1	
09:	AGP_30_8x	0 AGP8x ENABLED 1 AGP8x DISABLED
10:	AGP_SBA	0 SBA ENABLED 0 SBA DISABLED
11:	AGP_FASTWR	0 FW ENABLED 0 FW DISABLED
12:	PCI_DEVID_0	0101 (0x0165 NV44) 0001 (0x01D1 NV46)
13:	PCI_DEVID_1	
20:	PCI_DEVID_2	
21:	PCI_DEVID_3	
	PCI_DEVID_4	
14:	BUS_TYPE	0 PCI 1 AGP
15:	FP_IFACE	0 24Bit 1 12Bit (DEFAULT)
23:	FB_0	00 64M 01 128M 10 256M (DEFAULT) 11 512M
24:	FB_1	
25:	BR	0 BRIDGE DISABLED 1 BRIDGE ENABLED
26:	BR_128M	BR BITS IGNORED IF BRIDGE IS DISABLED
27:	BR_AGP	
28:	BR_IO	
29:	ROM_TYPE_0	00 PARALLEL 01 SERIAL_AT25F 10 SERIAL_SST45VF 11 LPC
30:	ROM_TYPE_1	
16:	USER_0	0000 (DEFAULT)
17:	USER_1	
18:	USER_2	
19:	USER_3	
	PEX_PLL_EN_TERM	01
	3GIO_PADCFG_LUT_ADDR[0]	
	3GIO_PADCFG_LUT_ADDR[1]	
	hostd2w_slot_clock_configuration	

ALL NVIDIA DESIGN SPECIFICATIONS, REFERENCE SPECIFICATIONS, REFERENCE BOARDS, FILES, DRAWINGS, DIAGNOSTICS, LISTS AND OTHER DOCUMENTS OR INFORMATION (TOGETHER AND SEPARATELY, "MATERIALS") ARE BEING PROVIDED "AS IS". THE MATERIALS MAY CONTAIN KNOWN AND UNKNOWN VIOLATIONS OR DEVIATIONS OF INDUSTRY STANDARDS AND SPECIFICATIONS. NVIDIA MAKES NO WARRANTIES, EXPRESSED, IMPLIED, STATUTORY OR OTHERWISE WITH RESPECT TO THE MATERIALS OR OTHERWISE, AND EXPRESSLY DISCLAIMS ALL IMPLIED WARRANTIES INCLUDING, WITHOUT LIMITATION, THE WARRANTIES OF DESIGN, OF NONINFRINGEMENT, MERCHANTABILITY OR FITNESS FOR A PARTICULAR PURPOSE, OR ARISING FROM A COURSE OF DEALING, TRADE USAGE, TRADE PRACTICE, OR INDUSTRY STANDARDS.

ASSEMBLY	BASE LEVEL GENERIC SCHEMATIC ONLY, COMMON & NO_STUFF ASSEMBLY NOTES AND BOM NOT FINAL
PAGE DETAIL	STRAPS, Mechanical Parts

NVIDIA CORPORATION
2701 SANTOMAS EXPRESSWAY
SANTA CLARA, CA 95050 USA

NV_PN	600-10383-xxxx-100		
ID		PAGE	
NAME		DATE	5-OCT-2005

XTAL, GPIO, BIOS, FAN, JTAG, THERMAL

Net Name	LINE_WIDTH	Voltage
5V_CLAMP	16MIL	5.0000
PLL_VDD	12MIL	3.3V

CRITICAL_NET	IMPEDANCE
XTALIN	50OHM
XTALOUT	50OHM

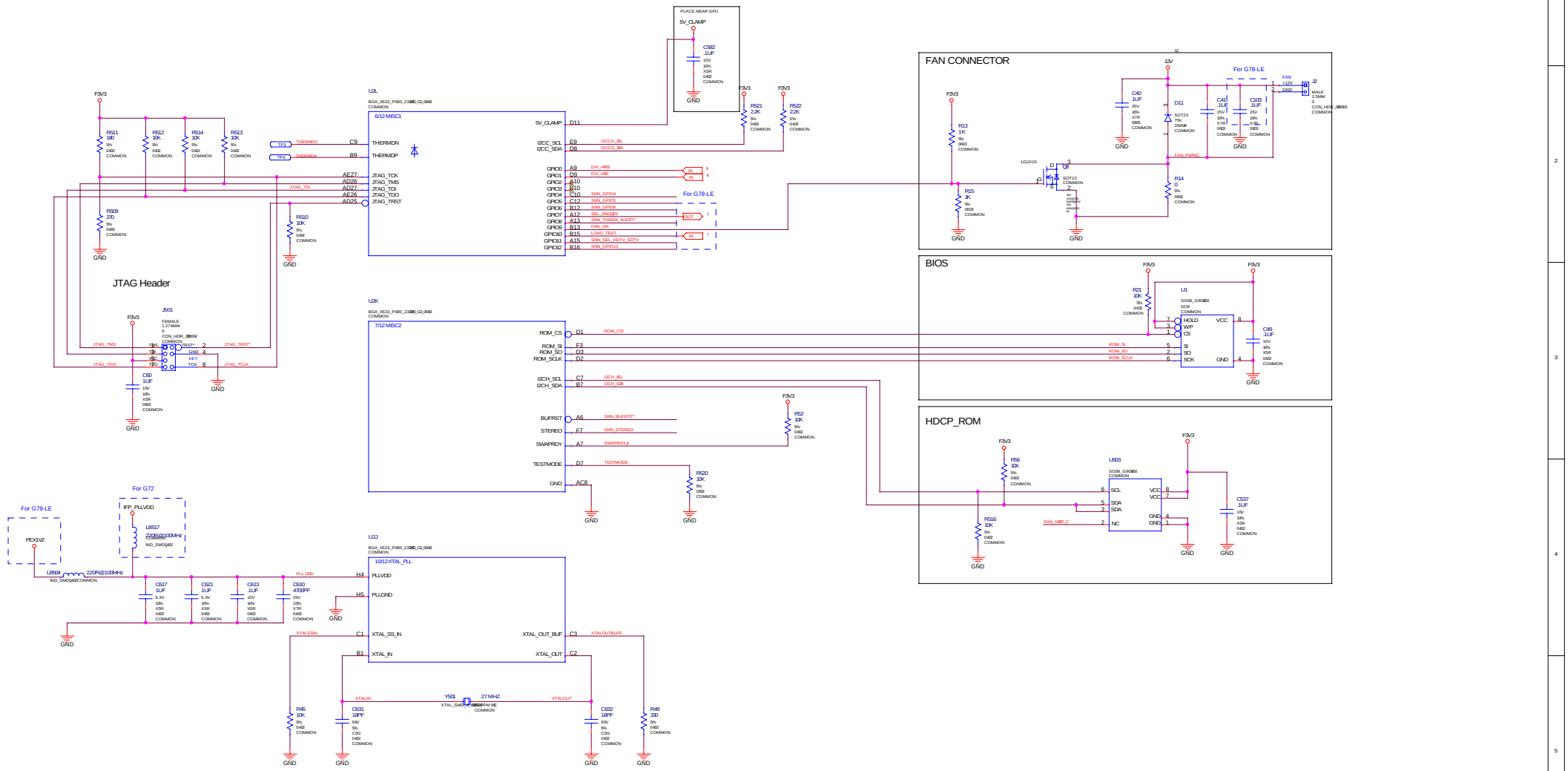

ALL NVIDIA DESIGN SPECIFICATIONS, REFERENCE SPECIFICATIONS, REFERENCE BOARDS, FILES, DRAWINGS, DIAGNOSTICS, LISTS AND OTHER DOCUMENTS OR INFORMATION (TOGETHER AND SEPARATELY, "MATERIALS") ARE BEING PROVIDED "AS IS". THE MATERIALS MAY CONTAIN KNOWN AND UNKNOWN VIOLATIONS OR DEVIATIONS OF INDUSTRY STANDARDS AND SPECIFICATIONS. NVIDIA MAKES NO WARRANTIES, EXPRESSED, IMPLIED, STATUTORY OR OTHERWISE WITH RESPECT TO THE MATERIALS OR OTHERWISE, AND EXPRESSLY DISCLAIMS ALL IMPLIED WARRANTIES INCLUDING, WITHOUT LIMITATION, THE WARRANTIES OF DESIGN, OF NONINFRINGEMENT, MERCHANTABILITY OR FITNESS FOR A PARTICULAR PURPOSE, OR ARISING FROM A COURSE OF DEALING, TRADE USAGE, TRADE PRACTICE, OR INDUSTRY STANDARDS.

ASSEMBLY	BASE LEVEL GENERIC SCHEMATIC ONLY, COMMON & NO_STUFF ASSEMBLY NOTES AND BOM NOT FINAL
PAGE DETAIL	XTAL, GPIO, BIOS, FAN, JTAG, THERMAL

NVIDIA CORPORATION
2701 SANTOMAS EXPRESSWAY
SANTA CLARA, CA 95050 USA

NV_PN	600-10383-xxxx-100		
ID		PAGE	
NAME		DATE	5-OCT-2005

PowerSupplyI: NVVDD, 5V

Net Name	LINE_WIDTH	Current	Voltage
12V	36MIL	4	12
12V_F	36MIL	3	12.0000
NVVDD	36MIL	15	1.20000
PEX1V2	16MIL	1.5	1.20000

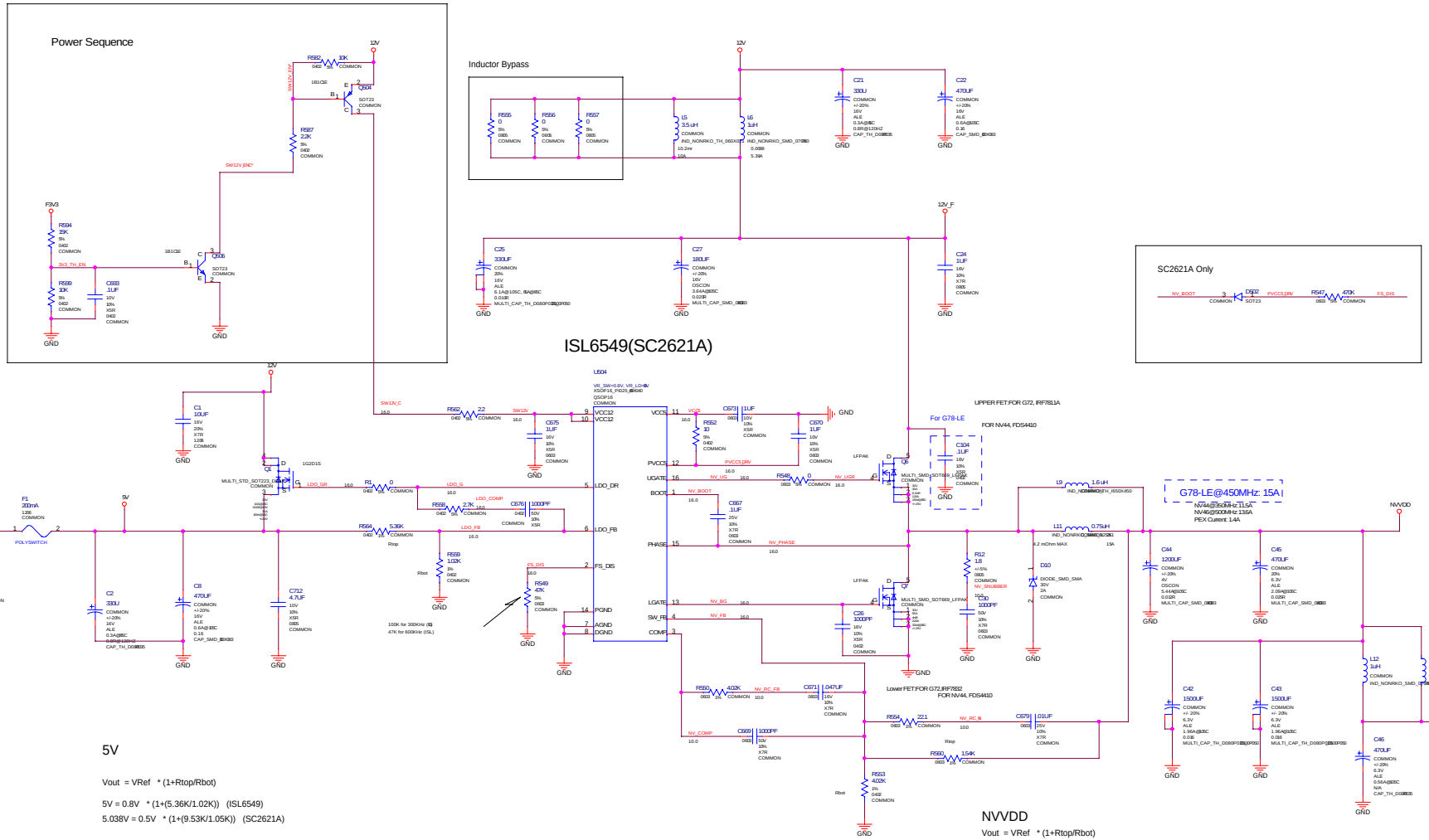

5V

Vout = VRef * (1+Rtop/Rbot)

5V = 0.8V * (1+(5.36K/1.02K)) (ISL6549)

5.038V = 0.5V * (1+(9.53K/1.05K)) (SC2621A)

NVVDD

Vout = VRef * (1+Rtop/Rbot)

1.1V = 0.8V * (1+(1.54k/4.02k)) (ISL6549)

1.2V = 0.8V * (1+(1.54k/3.09k)) (ISL6549)

1.26V = 0.8V * (1+(1.54k/2.67k)) (ISL6549)

1.2V = 0.5V * (1+(14.7k/10.5k)) (SC2621A)

ASSEMBLY	BASE LEVEL GENERIC SCHEMATIC ONLY, COMMON & NO_STUFF ASSEMBLY NOTES AND BOM NOT FINAL
PAGE DETAIL	PowerSupplyI: NVVDD,5V

ALL NVIDIA DESIGN SPECIFICATIONS, REFERENCE SPECIFICATIONS, REFERENCE BOARDS, FILES, DRAWINGS, DIAGNOSTICS, LISTS AND OTHER DOCUMENTS OR INFORMATION (TOGETHER AND SEPARATELY, "MATERIALS") ARE BEING PROVIDED "AS IS". THE MATERIALS MAY CONTAIN KNOWN AND UNKNOWN VIOLATIONS OR DEVIATIONS OF INDUSTRY STANDARDS AND SPECIFICATIONS. NVIDIA MAKES NO WARRANTIES, EXPRESSED, IMPLIED, STATUTORY OR OTHERWISE WITH RESPECT TO THE MATERIALS OR OTHERWISE, AND EXPRESSLY DISCLAIMS ALL IMPLIED WARRANTIES INCLUDING, WITHOUT LIMITATION, THE WARRANTIES OF DESIGN, OF NONINFRINGEMENT, MERCHANTABILITY OR FITNESS FOR A PARTICULAR PURPOSE, OR ARISING FROM A COURSE OF DEALING, TRADE USAGE, TRADE PRACTICE, OR INDUSTRY STANDARDS.

NVIDIA CORPORATION
2701 SANTOMAS EXPRESSWAY
SANTA CLARA, CA 95050 USA

NV_PN	600-10383-xxxx-100		
ID		PAGE	
NAME		DATE	5-OCT-2005

PowerSupplyII: 5V_CLAMP, F3V3

Net Name	LINE_WIDTH	Current	Voltage
5V	20MIL	1	5.0000
DDC_5V	20MIL	0.2	5.0000
3V3	36MIL	3	3.3
F3V3	36MIL	3	3.3

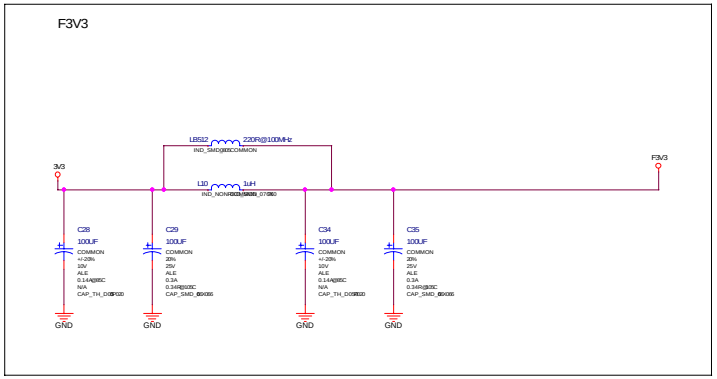

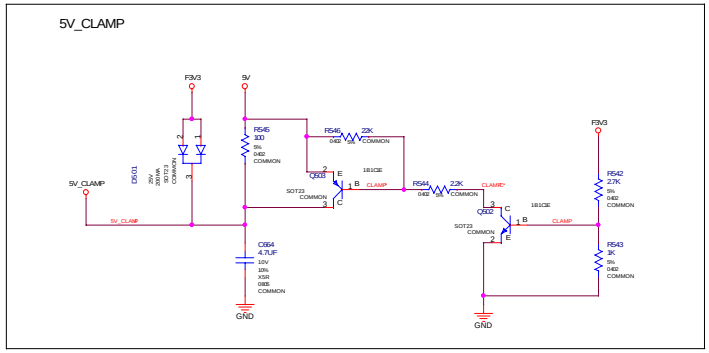

ASSEMBLY	BASE LEVEL GENERIC SCHEMATIC ONLY, COMMON & NO_STUFF ASSEMBLY NOTES AND BOM NOT FINAL
PAGE DETAIL	PowerSupplyII: 5V_CLAMP, F3V3

ALL NVIDIA DESIGN SPECIFICATIONS, REFERENCE SPECIFICATIONS, REFERENCE BOARDS, FILES, DRAWINGS, DIAGNOSTICS, LISTS AND OTHER DOCUMENTS OR INFORMATION (TOGETHER AND SEPARATELY, "MATERIALS") ARE BEING PROVIDED "AS IS". THE MATERIALS MAY CONTAIN KNOWN AND UNKNOWN VIOLATIONS OR DEVIATIONS OF INDUSTRY STANDARDS AND SPECIFICATIONS. NVIDIA MAKES NO WARRANTIES, EXPRESSED, IMPLIED, STATUTORY OR OTHERWISE WITH RESPECT TO THE MATERIALS OR OTHERWISE, AND EXPRESSLY DISCLAIMS ALL IMPLIED WARRANTIES INCLUDING, WITHOUT LIMITATION, THE WARRANTIES OF DESIGN, OF NONINFRINGEMENT, MERCHANTABILITY OR FITNESS FOR A PARTICULAR PURPOSE, OR ARISING FROM A COURSE OF DEALING, TRADE USAGE, TRADE PRACTICE, OR INDUSTRY STANDARDS.

NVIDIA CORPORATION
2701 SANTOMAS EXPRESSWAY
SANTA CLARA, CA 95050 USA

NV_PN	600-10383-xxxx-100		
ID		PAGE	
NAME		DATE	5-OCT-2005

PowerSupplyIII: FBVDDQ, FBVTT, PLLVDD

Net Name	LINE_WIDTH	Voltage
FBVDDQ	12MIL	2.0000
PLLVDD	16MIL	2.5V
GND	16MIL	0.00000

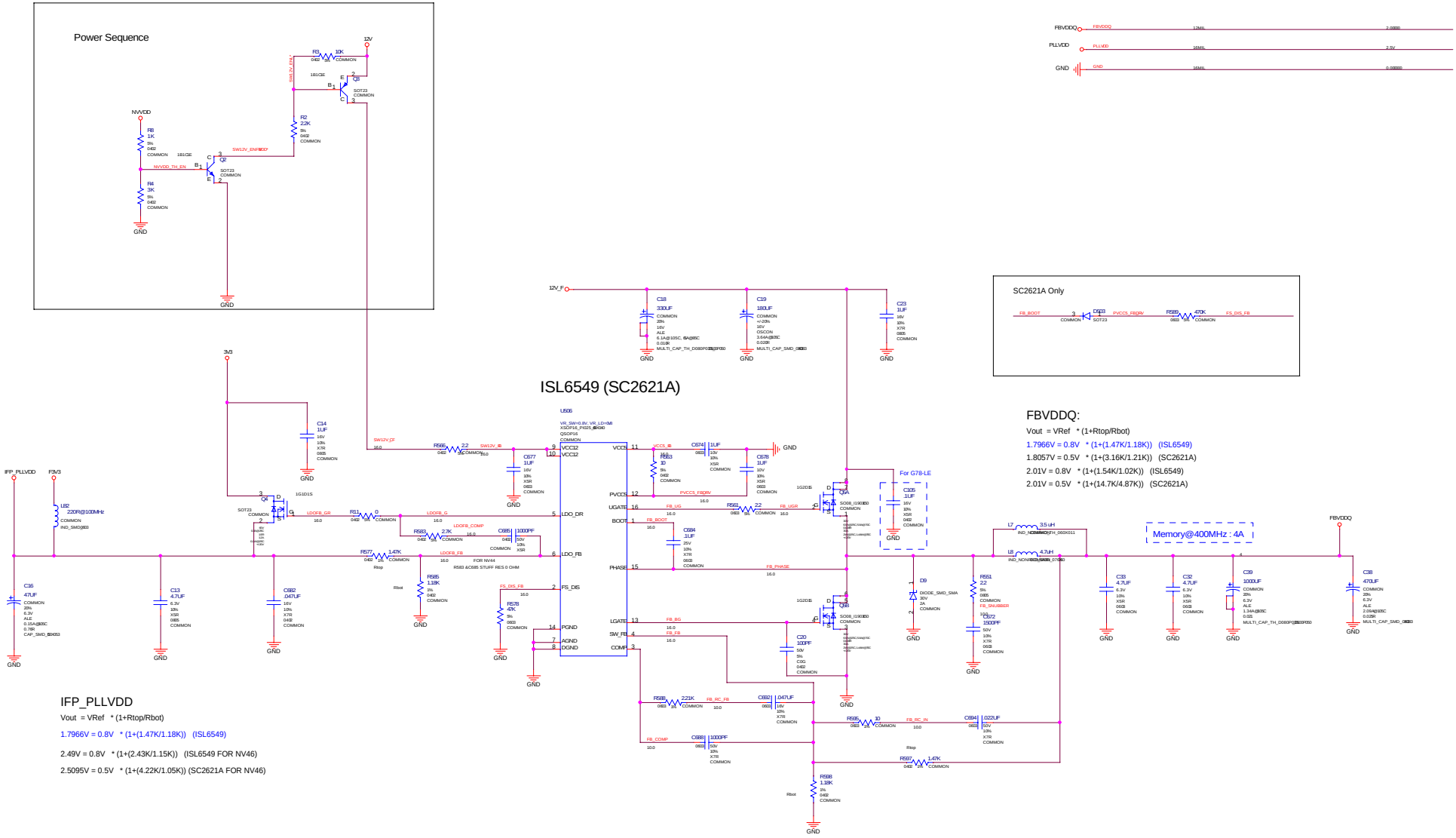

ALL NVIDIA DESIGN SPECIFICATIONS, REFERENCE SPECIFICATIONS, REFERENCE BOARDS, FILES, DRAWINGS, DIAGNOSTICS, LISTS AND OTHER DOCUMENTS OR INFORMATION (TOGETHER AND SEPARATELY, "MATERIALS") ARE BEING PROVIDED "AS IS". THE MATERIALS MAY CONTAIN KNOWN AND UNKNOWN VIOLATIONS OR DEVIATIONS OF INDUSTRY STANDARDS AND SPECIFICATIONS. NVIDIA MAKES NO WARRANTIES, EXPRESSED, IMPLIED, STATUTORY OR OTHERWISE WITH RESPECT TO THE MATERIALS OR OTHERWISE, AND EXPRESSLY DISCLAIMS ALL IMPLIED WARRANTIES INCLUDING, WITHOUT LIMITATION, THE WARRANTIES OF DESIGN, OF NONINFRINGEMENT, MERCHANTABILITY OR FITNESS FOR A PARTICULAR PURPOSE, OR ARISING FROM A COURSE OF DEALING, TRADE USAGE, TRADE PRACTICE, OR INDUSTRY STANDARDS.

ASSEMBLY	BASE LEVEL GENERIC SCHEMATIC ONLY, COMMON & NO_STUFF ASSEMBLY NOTES AND BOM NOT FINAL
PAGE DETAIL	PowerSupplyIII: FBVDDQ, FBVTT, PLLVDD

NVIDIA CORPORATION
2701 SANTOMAS EXPRESSWAY
SANTA CLARA, CA 95050 USA

NV_PN	600-10383-xxxx-100		
ID		PAGE	
NAME		DATE	5-OCT-2005

Title: Cref Part Report
Design: p383_00
Date: Sep 23 14:15:13 2005

BKT1 BRACKET_LOW_1X_TOP_A [11.2F]
LT
C1 C_1206 [13.3B]
C2 C_POL_TH_D80P35 [13.4B]
C3 C_0402 [9.4F]
C4 C_0402 [6.3G]
C5 C_0402 [6.3G]
C6 C_0402 [7.3G]
C7 C_0402 [7.2G]
C8 C_POL_SMD_D80 [13.4B]
C9 C_0603 [13.4A]
C10 C_0402 [6.1F]
C11 C_0402 [6.2F]
C12 C_0402 [7.1G]
C13 C_0805 [15.4B]
C14 C_0805 [15.3B]
C15 C_0603 [9.4F]
C16 C_POL_SMD_D50 [15.4A]
C17 C_0603 [6.2C]
C18 C_POL_COMBI_TH_D80_D [15.2D]
100
C19 C_POL_COMBI_7343_D80 [15.2E]
_D100
C20 C_0402 [15.4E]
C21 C_POL_TH_D80P35 [13.2E]
C22 C_POL_SMD_D80 [13.2E]
C23 C_0805 [15.2E]
C24 C_0805 [13.2E]
C25 C_POL_COMBI_TH_D80_D [13.2C]
100
C26 C_0402 [13.4E]
C27 C_POL_COMBI_7343_D80 [13.2D]
_D100
C28 C_POL_TH_D50P20 [14.3B]
C29 C_POL_SMD_D60 [14.3B]
C30 C_0603 [13.4E]
C31 C_1206 [2.1B]
C32 C_0603 [15.4G]
C33 C_0603 [15.4F]
C34 C_POL_TH_D50P20 [14.3C]
C35 C_POL_SMD_D60 [14.3C]
C36 C_0603 [2.1A]
C37 C_0402 [2.1A]
C38 C_POL_COMBI_7343_D80 [15.4H]
_D100
C39 C_POL_COMBI_TH_D80_D [15.4G]
100
C40 C_0805 [12.2F]
C41 C_0603 [12.2G]
C42 C_POL_COMBI_TH_D80_D [13.4F]
100
C43 C_POL_COMBI_TH_D80_D [13.4G]
100
C44 C_POL_COMBI_7343_D80 [13.4F]
_D100
C45 C_POL_COMBI_7343_D80 [13.4G]
_D100
C46 C_POL_TH_D80P35 [13.5G]
C47 C_POL_SMD_D80 [13.5H]
C48 C_0805 [9.2B]
C49 C_0402 [12.3G]
C50 C_0805 [2.3H]
C51 C_0805 [9.2C]
C52 C_0402 [9.2D]
C53 C_0402 [9.2C]
C54 C_0402 [9.2D]
C55 C_0402 [9.2D]
C56 C_0402 [6.4B]
C57 C_0603 [3.1D]
C58 C_0603 [2.4G]
C59 C_0402 [3.5A]
C60 C_0603 [12.3A]
C61 C_0402 [4.2G]
C62 C_0402 [4.2G]
C63 C_0402 [4.3F]
C64 C_0402 [4.2G]
C65 C_0402 [5.2G]
C66 C_0402 [4.2G]
C67 C_0402 [5.2F]
C68 C_0402 [4.3G]
C69 C_0402 [4.2F]
C70 C_0402 [5.2G]
C71 C_0402 [4.3G]
C72 C_0402 [5.2G]
C73 C_0402 [4.3G]
C74 C_0402 [5.2G]
C75 C_0402 [5.2G]
C76 C_0402 [5.2H]
C77 C_0402 [4.3G]
C78 C_0402 [5.3C]
C79 C_0402 [5.3E]
C80 C_0402 [5.2G]
C81 C_0402 [4.3G]
C82 C_0402 [5.2H]
C83 C_0402 [4.3G]
C84 C_0603 [4.3H]
C85 C_0603 [5.2H]
C501 C_0402 [4.2G]
C502 C_0402 [5.4G]
C503 C_0402 [5.4G]
C504 C_0402 [5.4G]
C505 C_0402 [4.3H]
C506 C_0402 [5.3F]
C507 C_0402 [4.2F]
C508 C_0402 [4.3E]
C509 C_0402 [5.3G]
C510 C_0402 [4.3C]
C511 C_0402 [4.3G]
C512 C_0402 [4.3G]
C513 C_0402 [5.3G]
C514 C_0402 [4.2G]
C515 C_0402 [4.2H]
C516 C_0402 [5.3G]
C517 C_0402 [4.2H]
C518 C_0402 [5.2F]
C519 C_0402 [4.2G]
C520 C_0402 [5.4F]
C521 C_0402 [5.3H]
C522 C_0402 [4.2G]
C523 C_0402 [5.3H]
C524 C_0402 [5.3H]
C525 C_0603 [5.3H]
C526 C_0603 [4.2H]
C527 C_0402 [2.5D]
C528 C_0402 [2.5D]
C529 C_0402 [3.2E]
C530 C_0402 [3.3E]
C531 C_0402 [3.2F]
C532 C_0402 [2.5D]
C533 C_0402 [3.2E]
C534 C_0402 [3.2F]
C535 C_0402 [3.2E]
C536 C_0402 [2.5D]
C537 C_0402 [12.4G]
C538 C_0402 [2.5D]
C539 C_0402 [2.5D]
C540 C_0402 [3.2E]
C541 C_0402 [2.4D]
C542 C_0402 [2.4D]
C543 C_0402 [3.2F]
C544 C_0402 [3.3E]
C545 C_0402 [2.4D]
C546 C_0402 [3.1D]
C547 C_0402 [3.1D]
C548 C_0402 [3.1C]
C549 C_0402 [3.2F]
C550 C_0402 [2.2H]
C551 C_0402 [2.2G]
C552 C_0402 [3.2E]
C553 C_0402 [3.2E]
C554 C_0402 [2.4D]
C555 C_0402 [3.3F]
C556 C_0402 [2.4D]
C557 C_0402 [2.1G]
C558 C_0402 [2.2G]
C559 C_0402 [2.1G]
C560 C_0402 [3.2E]
C561 C_0402 [3.1D]
C562 C_0805 [3.4E]

ASSEMBLY	BASE LEVEL GENERIC SCHEMATIC ONLY, COMMON & NO_STUFF ASSEMBLY NOTES AND BOM NOT FINAL
PAGE DETAIL	<edit here to insert page detail>

ALL NVIDIA DESIGN SPECIFICATIONS, REFERENCE SPECIFICATIONS, REFERENCE BOARDS, FILES, DRAWINGS, DIAGNOSTICS, LISTS AND OTHER DOCUMENTS OR INFORMATION (TOGETHER AND SEPARATELY, MATERIALS) ARE BEING PROVIDED AS IS. THE MATERIALS MAY CONTAIN KNOWN AND UNKNOWN VIOLATIONS OR DEVIATIONS OF INDUSTRY STANDARDS AND SPECIFICATIONS. NVIDIA MAKES NO WARRANTIES, EXPRESSED, IMPLIED, STATUTORY OR OTHERWISE WITH RESPECT TO THE MATERIALS OR OTHERWISE, AND EXPRESSLY DISCLAIMS ALL IMPLIED WARRANTIES INCLUDING, WITHOUT LIMITATION, THE WARRANTIES OF DESIGN, OF NONINFRINGEMENT, MERCHANTABILITY OR FITNESS FOR A PARTICULAR PURPOSE, OR ARISING FROM A COURSE OF DEALING, TRADE USAGE, TRADE PRACTICE, OR INDUSTRY STANDARDS.

NVIDIA CORPORATION
2701 SAN TOMAS EXPRESSWAY
SANTA CLARA, CA 95050, USA

NV_PN	600-10383-xxxx-100		
ID		PAGE	<CON_PAGE_NUM> OF <CON_TOTAL_PAGES>
NAME		DATE	5-OCT-2005

C563	C_0402	[2.4D]
C564	C_0402	[2.3G]
C565	C_0402	[2.2G]
C566	C_0402	[3.4E]
C567	C_0402	[3.4D]
C568	C_0402	[2.4D]
C569	C_0402	[2.1G]
C570	C_0402	[2.1G]
C571	C_0402	[2.4G]
C572	C_0402	[2.4G]
C573	C_0402	[2.4D]
C574	C_0402	[3.5D]
C575	C_0402	[3.5C]
C576	C_0402	[2.1G]
C577	C_0402	[2.4D]
C578	C_0805	[3.5D]
C579	C_0603	[3.1E]
C580	C_0402	[2.2G]
C581	C_0402	[2.2G]
C582	C_0402	[12.1D]
C583	C_0402	[2.4G]
C584	C_0402	[2.3G]
C585	C_0402	[2.3G]
C586	C_0402	[2.1G]
C587	C_0402	[2.4D]
C588	C_0402	[2.1G]
C589	C_0402	[2.3D]
C590	C_0402	[2.1H]
C591	C_0402	[2.2H]
C592	C_0402	[2.3G]
C593	C_0402	[2.3D]
C594	C_0402	[2.3G]
C595	C_0402	[2.2G]
C596	C_0402	[2.5G]
C597	C_0402	[2.1G]
C598	C_0402	[2.2G]
C599	C_0402	[2.3D]
C600	C_0402	[7.3B]
C601	C_0402	[10.2B]
C602	C_0402	[2.3D]
C603	C_0402	[8.3B]
C604	C_0402	[7.3A]
C605	C_0402	[7.3A]
C606	C_0402	[7.3A]
C607	C_0402	[7.3A]
C608	C_0402	[10.4B]
C609	C_0402	[2.3D]
C610	C_0402	[12.4B]
C611	C_0402	[2.3D]
C612	C_0402	[2.3D]
C613	C_0402	[12.4B]
C614	C_0402	[2.5G]
C615	C_0402	[8.3B]
C616	C_0402	[2.3D]
C617	C_0402	[12.4A]
C618	C_0402	[8.3B]
C619	C_0402	[6.4A]
C620	C_0402	[2.3D]
C621	C_0402	[12.4B]
C622	C_0402	[8.3B]
C623	C_0402	[6.4A]
C624	C_0402	[6.4A]
C625	C_0402	[2.3D]
C626	C_0402	[6.4A]
C627	C_0402	[8.3B]
C628	C_0402	[2.5G]
C629	C_0402	[9.3B]
C630	C_0402	[2.2D]
C631	C_0402	[12.5B]
C632	C_0402	[12.5D]
C633	C_0402	[2.5G]
C634	C_0402	[9.3B]
C635	C_0402	[9.3B]
C636	C_0402	[2.2D]
C637	C_0805	[2.3G]
C638	C_0402	[2.5H]
C639	C_0402	[9.3B]
C640	C_0402	[9.3B]
C641	C_0402	[2.2D]
C642	C_0402	[8.2D]
C643	C_0402	[8.2D]
C644	C_0402	[8.2D]

C645	C_0805	[2.1H]
C646	C_0402	[9.3B]
C647	C_0402	[9.3A]
C648	C_0402	[2.2D]
C649	C_0402	[9.3B]
C650	C_0402	[2.2D]
C651	C_0805	[9.3A]
C652	C_0805	[2.1H]
C653	C_0402	[2.2D]
C654	C_0402	[8.2C]
C655	C_0402	[8.3B]
C656	C_0402	[8.3B]
C657	C_0402	[8.3A]
C658	C_0402	[2.4G]
C659	C_0805	[8.2C]
C660	C_0402	[2.4G]
C661	C_0805	[2.3H]
C662	C_0805	[8.2B]
C663	C_0805	[8.3A]
C664	C_0805	[14.3F]
C665	C_0402	[2.1A]
C666	C_0402	[2.1B]
C667	C_0603	[13.3D]
C668	C_1206	[2.1B]
C669	C_0603	[13.4E]
C670	C_0603	[13.3E]
C671	C_0603	[13.4E]
C672	C_0603	[15.4F]
C673	C_0603	[13.3D]
C674	C_0603	[15.3D]
C675	C_0603	[13.3D]
C676	C_0402	[13.3C]
C677	C_0603	[15.3C]
C678	C_0603	[15.3E]
C679	C_0603	[13.4F]
C680	C_0603	[8.5F]
C681	C_0402	[7.4C]
C682	C_0402	[15.4B]
C683	C_0402	[7.4B]
C684	C_0603	[15.4D]
C685	C_0402	[15.4C]
C686	C_0603	[8.4D]
C687	C_0603	[9.3E]
C688	C_0603	[15.5D]
C689	C_0402	[7.1G]
C690	C_0603	[8.4E]
C691	C_0603	[9.3E]
C692	C_0603	[15.4E]
C693	C_0402	[13.2B]
C694	C_0603	[15.4F]
C695	C_0402	[8.5F]
C696	C_0402	[7.4E]
C697	C_0402	[7.3E]
C698	C_0402	[7.5E]
C699	C_0402	[6.5F]
C700	C_0402	[6.4F]
C701	C_0402	[6.4F]
C702	C_0603	[8.4E]
C703	C_0603	[9.3F]
C704	C_0402	[9.4G]
C705	C_0402	[8.4G]
C706	C_0402	[7.4F]
C707	C_0402	[7.3F]
C708	C_0402	[7.5F]
C709	C_0402	[6.5F]
C710	C_0402	[6.4F]
C711	C_0402	[6.4F]
C712	C_0805	[13.4B]
CN1	CON_PCI_EXPRESS_NONP	[2.3C]
	HY-X16	
D1	D_3PIN_AC_SOT23	[6.3F]
D2	D_3PIN_AC_SOT23	[7.2F]
D3	D_3PIN_AC_SOT23	[9.4E]
D4	D_3PIN_AC_SOT23	[6.2F]
D5	D_3PIN_AC_SOT23	[6.3F]
D6	D_3PIN_AC_SOT23	[7.3F]
D7	D_3PIN_AC_SOT23	[7.1F]
D8	D_3PIN_AC_SOT23	[6.2F]
D9	D_SCHOTTKY_SMA	[15.4E]
D10	D_SCHOTTKY_SMA	[13.4F]
D11	D_SOT23	[12.2G]
D501	D_3PIN_CC_SOT23	[14.3F]

ASSEMBLY	BASE LEVEL GENERIC SCHEMATIC ONLY, COMMON & NO_STUFF ASSEMBLY NOTES AND BOM NOT FINAL
PAGE DETAIL	<edit here to insert page detail>

ALL NVIDIA DESIGN SPECIFICATIONS, REFERENCE SPECIFICATIONS, REFERENCE BOARDS, FILES, DRAWINGS, DIAGNOSTICS, LISTS AND OTHER DOCUMENTS OR INFORMATION (TOGETHER AND SEPARATELY, MATERIALS) ARE BEING PROVIDED AS IS. THE MATERIALS MAY CONTAIN KNOWN AND UNKNOWN VIOLATIONS OR DEVIATIONS OF INDUSTRY STANDARDS AND SPECIFICATIONS. NVIDIA MAKES NO WARRANTIES, EXPRESSED, IMPLIED, STATUTORY OR OTHERWISE WITH RESPECT TO THE MATERIALS OR OTHERWISE, AND EXPRESSLY DISCLAIMS ALL IMPLIED WARRANTIES INCLUDING, WITHOUT LIMITATION, THE WARRANTIES OF DESIGN, OF NONINFRINGEMENT, MERCHANTABILITY OR FITNESS FOR A PARTICULAR PURPOSE, OR ARISING FROM A COURSE OF DEALING, TRADE USAGE, TRADE PRACTICE, OR INDUSTRY STANDARDS.

NVIDIA CORPORATION
2701 SAN TOMAS EXPRESSWAY
SANTA CLARA, CA 95050, USA

NV_PN	600-10383-xxxx-100		
ID		PAGE	<CON_PAGE_NUM> OF <CON_TOTAL_PAGES>
NAME		DATE	5-OCT-2005

D502	D_SOT23	[13.2G]
D503	D_SOT23	[15.2F]
D504	D_3PIN_AC_SOT23	[7.1F]
D505	D_3PIN_AC_SOT23	[8.5E]
F1	F_POLYSW_1206	[13.3A]
J1	CON_LFH_DMS59	[8.3H]
J1	CON_LFH_DMS59	[9.3H]
J2	HDR_1X2_NORM	[12.2G]
J501	HDR_2X4_KEY6	[12.3A]
L1	L_0603	[6.3F]
L2	L_0603	[6.2F]
L3	L_0603	[7.2F]
L4	L_0603	[7.2F]
L5	L_TH	[13.2D]
L6	L_7_6X7_6	[13.2D]
L7	L_TH	[15.3F]
L8	L_7_6X7_6	[15.4F]
L9	L_TH	[13.3F]
L10	L_7_6X7_6	[14.3C]
L11	L_SMD_12XS	[13.3F]
L12	L_7_6X7_6	[13.4G]
L501	L_0603	[8.4E]
L502	L_0603	[9.3E]
L503	L_0603	[7.4F]
L504	L_0603	[7.3F]
L505	L_0603	[7.5F]
L506	L_0603	[6.5F]
L507	L_0603	[6.3F]
L508	L_0603	[6.4F]
LB1	L_BEAD_0603	[9.4F]
LB2	L_BEAD_0603	[15.3A]
LB3	L_BEAD_0603	[9.2B]
LB501	L_BEAD_0402	[3.4F]
LB502	L_BEAD_0402	[3.5E]
LB503	L_BEAD_0402	[7.2A]
LB504	L_BEAD_0402	[12.4A]
LB505	L_BEAD_0402	[6.4A]
LB506	L_BEAD_0603	[2.5H]
LB507	L_BEAD_0402	[9.3A]
LB508	L_BEAD_0603	[8.2B]
LB509	L_BEAD_0402	[8.3A]
LB510	L_Bead_0402	[2.4G]
LB511	L_BEAD_0805	[13.4H]
LB512	L_BEAD_0805	[14.3C]
LB513	L_BEAD_0603	[8.5F]
MEC1	MEC_SCREW_STD	[11.3G]
MEC2	MEC_SCREW_STD	[11.3G]
MEC3	MEC_SCREW_STD	[11.2G]
MEC4	HEATSINK_GPU	[11.3F]
MEC5	HEATSINK_GPU	[11.3G]
Q1	Q_FET_N_ENH_COMBI_MO NO_1G2D1S	[13.3B]
Q2	Q_NPN_SOT23_1B1C1E	[15.2B]
Q3	Q_PNP_SOT23_1B1C1E	[15.1C]
Q4	Q_FET_N_ENH_SOT23_1G 1D1S	[15.3B]
Q5	Q_FET_N_ENH_SO8_DUAL _1G2D1S	[15.3E 15.4E]
Q6	Q_FET_N_ENH_LFPAK	[13.3E]
Q7	Q_FET_N_ENH_LFPAK	[13.4E]
Q8	Q_FET_N_ENH_SOT23_1G 1D1S	[12.2F]
Q9	Q_FET_N_ENH_SOT23_1G 1D1S	[8.2A]
Q10	Q_FET_P_ENH_SOT23_1G 1D1S	[8.2B]
Q501	Q_FET_N_ENH_SOT23_1G 1D1S	[7.4B]
Q502	Q_NPN_SOT23_1B1C1E	[14.3G]
Q503	Q_PNP_SOT23_1B1C1E	[14.3F]
Q504	Q_PNP_SOT23_1B1C1E	[13.2C]
Q505	U_SW_ANA_3257_XSOP16 _SECT	[7.3E 7.5E 7.4E 7.4E 7.4B]
Q506	Q_NPN_SOT23_1B1C1E	[13.2B]
R1	R_0402	[13.3C]
R2	R_0402	[15.1B]
R3	R_0402	[15.1C]
R4	R_0402	[15.2B]
R5	R_0402	[9.4E]
R6	R_0402	[9.4E]
R7	R_0402	[6.1E]
R8	R_0402	[15.2B]
R9	R_0402	[7.1E]
R10	R_0402	[6.2E]
R11	R_0402	[15.3C]
R12	R_0805	[13.4E]
R13	R_0603	[12.2E]
R14	R_0603	[12.2G]
R15	R_0603	[12.2F]
R16	R_0603	[8.1B]
R17	R_0402	[8.2A]
R18	R_0402	[11.2C]
R19	R_0402	[9.3C]
R20	R_0402	[11.3C]
R21	R_0402	[12.3F]
R22	R_0402	[11.2C]
R23	R_0402	[11.2B]
R24	R_0402	[11.1C]
R25	R_0402	[10.3D]
R26	R_0402	[9.2E]
R27	R_0402	[9.2E]
R28	R_0402	[9.2F]
R29	R_0402	[9.2F]
R30	R_0402	[11.1C]
R31	R_0402	[11.1C]
R32	R_0402	[11.1B]
R33	R_0402	[11.1B]
R34	R_0402	[11.2C]
R35	R_0402	[11.1B]
R36	R_0402	[11.3C]
R37	R_0402	[9.2D]
R38	R_0402	[9.2E]
R39	R_0402	[9.2E]
R40	R_0402	[9.2F]
R41	R_0402	[8.4C]
R42	R_0402	[6.5D]
R43	R_0402	[6.4D]
R44	R_0402	[6.4D]
R45	R_0402	[12.5B]
R46	R_0402	[11.1B]
R47	R_0402	[11.4C]
R48	R_0402	[11.4B]
R49	R_0402	[12.5D]
R50	R_0402	[11.4C]
R51	R_0402	[11.5B]
R52	R_0402	[12.3E]
R53	R_0402	[7.4C]
R54	R_0402	[3.5A]
R55	R_0402	[3.5A]
R56	R_0402	[12.4F]
R57	R_0402	[3.5F]
R58	R_0402	[3.5F]
R59	R_0402	[5.2C]
R60	R_0402	[3.5H]
R61	R_0402	[3.5H]
R62	R_0402	[5.3C]
R63	R_0402	[4.5B]
R64	R_0402	[4.5B]
R65	R_0603	[4.5B]
R66	R_0402	[4.5B]
R67	R_0402	[4.5B]
R501	R_0402	[3.3D]
R502	R_0402	[4.3C]
R503	R_0402	[5.5E]
R504	R_0402	[5.5E]
R505	R_0402	[4.3C]
R506	R_0603	[5.5D]
R507	R_0402	[5.5D]
R508	R_0402	[5.5D]
R509	R_0402	[12.2A]
R510	R_0402	[12.2B]
R511	R_0402	[12.2A]
R512	R_0402	[12.2A]
R513	R_0402	[12.2B]
R514	R_0402	[12.2B]
R515	R_0402	[3.4C]
R516	R_0402	[12.4F]
R517	R_0402	[3.4D]
R518	R_0402	[3.4D]
R519	R_0402	[8.3C]
R520	R_0402	[12.4D]
R521	R_0402	[12.2D]
R522	R_0402	[12.2E]
R523	R_0402	[7.3B]

ASSEMBLY	BASE LEVEL GENERIC SCHEMATIC ONLY, COMMON & NO_STUFF ASSEMBLY NOTES AND BOM NOT FINAL
PAGE DETAIL	<edit here to insert page detail>

NVIDIA CORPORATION
2701 SAN TOMAS EXPRESSWAY
SANTA CLARA, CA 95050, USA

NV_PN	600-10383-xxxx-100		
ID		PAGE	<CON_PAGE_NUM> OF <CON_TOTAL_PAGES>
NAME		DATE	5-OCT-2005

ALL NVIDIA DESIGN SPECIFICATIONS, REFERENCE SPECIFICATIONS, REFERENCE BOARDS, FILES, DRAWINGS, DIAGNOSTICS, LISTS AND OTHER DOCUMENTS OR INFORMATION (TOGETHER AND SEPARATELY, MATERIALS) ARE BEING PROVIDED AS IS. THE MATERIALS MAY CONTAIN KNOWN AND UNKNOWN VIOLATIONS OR DEVIATIONS OF INDUSTRY STANDARDS AND SPECIFICATIONS. NVIDIA MAKES NO WARRANTIES, EXPRESSED, IMPLIED, STATUTORY OR OTHERWISE WITH RESPECT TO THE MATERIALS OR OTHERWISE, AND EXPRESSLY DISCLAIMS ALL IMPLIED WARRANTIES INCLUDING, WITHOUT LIMITATION, THE WARRANTIES OF DESIGN, OF NONINFRINGEMENT, MERCHANTABILITY OR FITNESS FOR A PARTICULAR PURPOSE, OR ARISING FROM A COURSE OF DEALING, TRADE USAGE, TRADE PRACTICE, OR INDUSTRY STANDARDS.

R524	R_0402	[7.3B]
R525	R_0402	[7.5D]
R526	R_0402	[7.4D]
R527	R_0402	[7.3D]
R528	R_0402	[6.5B]
R529	R_0402	[6.1D]
R530	R_0402	[6.2D]
R531	R_0402	[7.1D]
R532	R_0402	[7.1D]
R533	R_0402	[8.2F]
R534	R_0402	[8.2F]
R535	R_0402	[2.2E]
R536	R_0402	[8.2E]
R537	R_0402	[8.2F]
R538	R_0402	[8.2D]
R539	R_0402	[8.2E]
R540	R_0402	[8.2E]
R541	R_0402	[8.2E]
R542	R_0402	[14.3G]
R543	R_0402	[14.3G]
R544	R_0402	[14.3G]
R545	R_0402	[14.3F]
R546	R_0402	[14.3G]
R547	R_0603	[13.2G]
R548	R_0402	[13.3E]
R549	R_0603	[13.4C]
R550	R_0603	[13.4D]
R551	R_0805	[15.4F]
R552	R_0402	[13.3D]
R553	R_0402	[13.5E]
R554	R_0603	[13.4E]
R555	R_0805	[13.2C]
R556	R_0805	[13.2D]
R557	R_0805	[13.2D]
R558	R_0402	[13.3C]
R559	R_0402	[13.4C]
R560	R_0603	[13.5E]
R561	R_0402	[15.3E]
R562	R_0402	[13.3C]
R563	R_0402	[15.3D]
R564	R_0402	[13.3C]
R565	R_0402	[6.3E]
R566	R_0402	[15.3C]
R567	R_0402	[7.2E]
R568	R_0402	[7.2E]
R569	R_0402	[6.3E]
R570	R_0402	[7.2E]
R571	R_0402	[7.4E]
R572	R_0402	[7.5D]
R573	R_0402	[7.4E]
R574	R_0402	[6.2E]
R575	R_0402	[7.2E]
R576	R_0402	[7.4E]
R577	R_0402	[15.4C]
R578	R_0603	[15.4C]
R579	R_0402	[6.2E]
R580	R_0402	[7.5E]
R581	R_0402	[7.5E]
R582	R_0402	[13.1C]
R583	R_0402	[15.4C]
R584	R_0402	[7.3E]
R585	R_0402	[15.4C]
R586	R_0402	[7.1E]
R587	R_0402	[13.2B]
R588	R_0603	[15.4D]
R589	R_0603	[15.2G]
R590	R_0402	[8.5E]
R591	R_0402	[7.3E]
R592	R_0402	[7.4E]
R593	R_0402	[7.3E]
R594	R_0402	[13.2A]
R595	R_0603	[15.4E]
R596	R_0402	[8.5E]
R597	R_0402	[15.5E]
R598	R_0402	[15.5E]
R599	R_0402	[13.2A]
R600	R_0402	[6.5E]
R601	R_0402	[6.4E]
R602	R_0402	[6.4E]
R603	R_0402	[7.4A]
R604	R_0402	[7.4D]
R605	R_0402	[7.3D]

R606	R_0402	[7.4A]
R607	R_0402	[8.4G]
RP1	R_PAK_0402X4	[3.3H 3.4G 3.3H 3.4G]
RP2	R_PAK_0402X4	[3.4G 3.3H 3.4G 3.4H]
RP3	R_PAK_0402X4	[3.1G 3.3G 3.1G 3.3G]
RP4	R_PAK_0402X4	[3.3H 3.2H 3.3H 3.2H]
RP5	R_PAK_0402X4	[3.3G 3.2H 3.2H 3.4G]
RP6	R_PAK_0402X4	[3.2G 3.2G 3.4H 3.4H]
RP7	R_PAK_0402X4	[3.2G 3.3G 3.2G 3.3G]
RP8	R_PAK_0402X4	[3.1G 3.2H 3.2H 3.1G]
RP9	R_PAK_0402X4	[3.1H 3.1H 3.1H 3.1H]
RP10	R_PAK_0402X4	[3.3H 3.3H 3.4H 3.4H]
RP11	R_PAK_0402X4	[3.3G 3.2G 3.2G 3.3G]
RP12	R_PAK_0402X4	[3.2H 3.2H 3.2G 3.2G]
TP1	LABTESTPOINT_PIN	[8.2B]
TP2	LABTESTPOINT_PIN	[8.2B]
TP3	LABTESTPOINT_PIN	[12.2B]
TP4	LABTESTPOINT_PIN	[12.2B]
TP501	LABTESTPOINT_PIN	[3.4E]
U1	U_MEM_FL_SER_128KX8_SO8	[12.3G]
U2	U_GPU_G3_64_BGA533	[2.3F]
U2	U_GPU_G3_64_BGA533	[3.3B]
U2	U_GPU_G3_64_BGA533	[6.5C]
U2	U_GPU_G3_64_BGA533	[7.3C]
U2	U_GPU_G3_64_BGA533	[8.3C]
U2	U_GPU_G3_64_BGA533	[9.3C]
U2	U_GPU_G3_64_BGA533	[10.3H 10.2C 10.4C]
U2	U_GPU_G3_64_BGA533	[12.3C 12.4C 12.2C]
U3	U_MEM_SD_DDR2_X16_BGA84	[4.3C 4.2B 4.4E]
U4	U_MEM_SD_DDR2_X16_BGA84	[5.2B 5.3C 5.4E]
U501	U_MEM_SD_DDR2_X16_BGA84	[4.3E 4.2E 4.4C]
U502	U_MEM_SD_DDR2_X16_BGA84	[5.2E 5.4C 5.3E]
U503	U_MEM_EE_CRYPT_8X128_SO8	[12.4F]
U504	U_SWREG_ISL6549_QSOP16	[13.3D]
U505	U_AND_2IN_74ACT_SO	[6.2D 6.3D]
U505	U_AND_2IN_74ACT_SO	[7.2D 7.2D]
U506	U_SWREG_ISL6549_QSOP16	[15.4D]
Y501	XTAL_4PIN_H10SSMD	[12.5C]

ASSEMBLY	BASE LEVEL GENERIC SCHEMATIC ONLY, COMMON & NO_STUFF ASSEMBLY NOTES AND BOM NOT FINAL
PAGE DETAIL	<edit here to insert page detail>

ALL NVIDIA DESIGN SPECIFICATIONS, REFERENCE SPECIFICATIONS, REFERENCE BOARDS, FILES, DRAWINGS, DIAGNOSTICS, LISTS AND OTHER DOCUMENTS OR INFORMATION (TOGETHER AND SEPARATELY, MATERIALS) ARE BEING PROVIDED AS IS. THE MATERIALS MAY CONTAIN KNOWN AND UNKNOWN VIOLATIONS OR DEVIATIONS OF INDUSTRY STANDARDS AND SPECIFICATIONS. NVIDIA MAKES NO WARRANTIES, EXPRESSED, IMPLIED, STATUTORY OR OTHERWISE WITH RESPECT TO THE MATERIALS OR OTHERWISE, AND EXPRESSLY DISCLAIMS ALL IMPLIED WARRANTIES INCLUDING, WITHOUT LIMITATION, THE WARRANTIES OF DESIGN, OF NONINFRINGEMENT, MERCHANTABILITY OR FITNESS FOR A PARTICULAR PURPOSE, OR ARISING FROM A COURSE OF DEALING, TRADE USAGE, TRADE PRACTICE, OR INDUSTRY STANDARDS.

NVIDIA CORPORATION
2701 SAN TOMAS EXPRESSWAY
SANTA CLARA, CA 95050, USA

NV_PN	600-10383-xxxx-100		
ID		PAGE	<CON_PAGE_NUM> OF <CON_TOTAL_PAGES>
NAME		DATE	5-OCT-2005