PG132-A02

370W, FH Std PCB, 384b, GDDR6x 2CH X16
DP + DP + DP + HDMI/DP

TABLE OF CONTENTS

Page	Description
1	Table of Contents
2	BLOCK DIAGRAM
3	PCI EXPRESS
4	MEMORY: GPU PARTITION A/B
5	MEMORY: FBA PARTITION[31:0]
6	MEMORY: FBA PARTITION[63:32]
7	MEMORY: FBB PARTITION[31:0]
8	MEMORY: FBB PARTITION[63:32]
9	MEMORY: GPU PARTITION C/D
10	MEMORY: FBC PARTITION[31:0]
11	MEMORY: FBC PARTITION[63:32]
12	MEMORY: FBD PARTITION[31:0]
13	MEMORY: FBD PARTITION[63:32]
14	MEMORY: GPU PARTITION E/F
15	MEMORY: FBE PARTITION[31:0]
16	MEMORY: FBE PARTITION[63:32]
17	MEMORY: FBF PARTITION[31:0]
18	MEMORY: FBF PARTITION[63:32]
19	GPU GND, RFUs & RSVD
20	GPU POWERS
21	GPU DECOUPLING NVVDD
22	GPU DECOUPLING FBVDDQ
23	GPU DECOUPLING MSVDD
24	BLANK
25	NVHS x16
26	MISC: THERMAL, JTAG, GPIO
27	IFPA UNUSED, IFPB UNUSED
28	IFPE DP
29	IFPD DP
30	IFPC HDMI/DP
31	IFPF DP
32	MISC. ROM, STRAPS
33	MISC. XTAL, PLL
34	PS: 5V
35	PS: PEX_DVDD and 1V8
36	BLANK
37	PS: FBVDD Controller OVR3
38	PS: FBVDDQ OVR4
39	PS: FBVDD PH1
40	PS: FBVDD PH3
41	PS: FBVDD PH2
42	PS: FBVDD PH4
43	PS: FBVDD OUTPUT CAP
44	PS: FBVDD_OUTPUT_CAP_NEAR_MEMORY
45	PS: MSVDD CONTROLLER
46	PS: MSVDD PH1
47	PS: MSVDD PH2
48	PS: MSVDD PH3 and PH5
49	PS: MSVDD PH4 and PH6
50	PS: MSVDD OUTPUT CAP(TOP)
51	BLANK
52	PS: NVVDD Controller_OVR8
53	PS: NVVDD PH1 (PWM1)
54	PS: NVVDD PH2(PWM6)
55	PS: NVVDD PH3 (PWM3) and PH4 (PWM3)
56	PS: NVVDD PH5(PWM7) and PH7(PWM8)
57	PS: NVVDD PH6 (PWM7)
58	PS: NVVDD PH8(PWM5) and PH9(PWM2)
59	PS: NVVDD PH10 (PWM4)
60	Colayout_Notes
61	BLANK
62	PS: NVVDD OUTPUT CAP(TOP)
63	BLANK
64	PS: INPUT SWITCH RTD3
65	BLANK
66	PS: INPUTS, FILTERING, and, MONITORING
67	PS: HOT UNPLUG
68	PS: Discrete Power Steering
69	PS: PREFILTER
70	PS: PREFILTER B
71	Sequence: 5V, 1V8, 3V3_SEQ
72	Sequence: NV, PEX, FB EN
73	Sequence: 3V3 MONITOR
74	Sequence: MISC
75	MISC: LED & FAN

Gigabyte Confidential
Do not Copy

ALL NVIDIA DESIGN SPECIFICATIONS, REFERENCE SPECIFICATIONS, REFERENCE BOARDS, FILES, DRAWINGS, DIAGNOSTICS, LISTS AND OTHER DOCUMENTS OR INFORMATION (TOGETHER AND SEPARATELY, 'MATERIALS') ARE BEING PROVIDED 'AS IS'. THE MATERIALS MAY CONTAIN KNOWN AND UNKNOWN VIOLATIONS OR DEVIATIONS OF INDUSTRY STANDARDS AND SPECIFICATIONS. NVIDIA MAKES NO WARRANTIES, EXPRESSED, IMPLIED, STATUTORY OR OTHERWISE WITH RESPECT TO THE MATERIALS OR OTHERWISE, AND EXPRESSLY DISCLAIMS ALL IMPLIED WARRANTIES INCLUDING, WITHOUT LIMITATION, THE WARRANTIES OF DESIGN, OF NONINFRINGEMENT, MERCHANTABILITY OR FITNESS FOR A PARTICULAR PURPOSE, OR ARISING FROM A COURSE OF DEALING, TRADE USAGE, TRADE PRACTICE, OR INDUSTRY STANDARDS.

ASSEMBLY
PAGE DETAIL

<ASSEMBLY_DESCRIPTION>
Table of Contents

GIGABYTE

Title: TABLE CONTENT

Size: Custom | Document Number: GV-N3080AORUSX W-10GD | Rev: 1.0

Date: Wednesday, September 30, 2020 | Sheet 1 of 75

Block Diagram

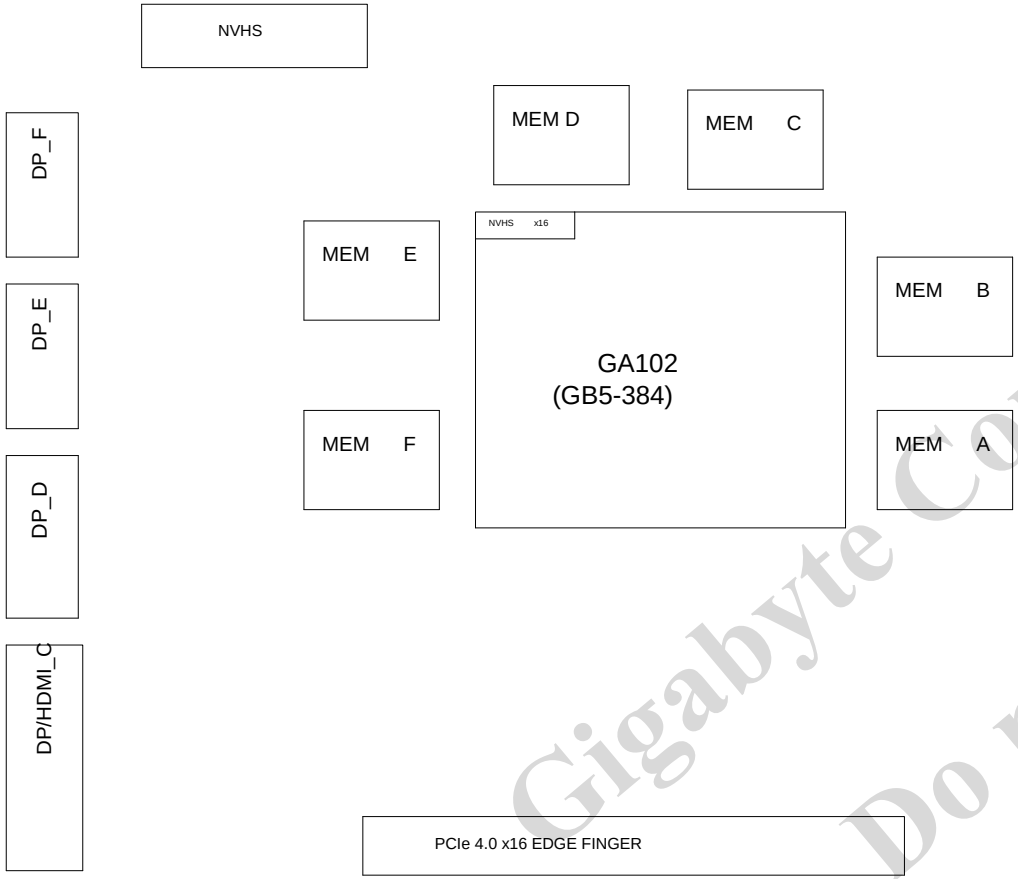

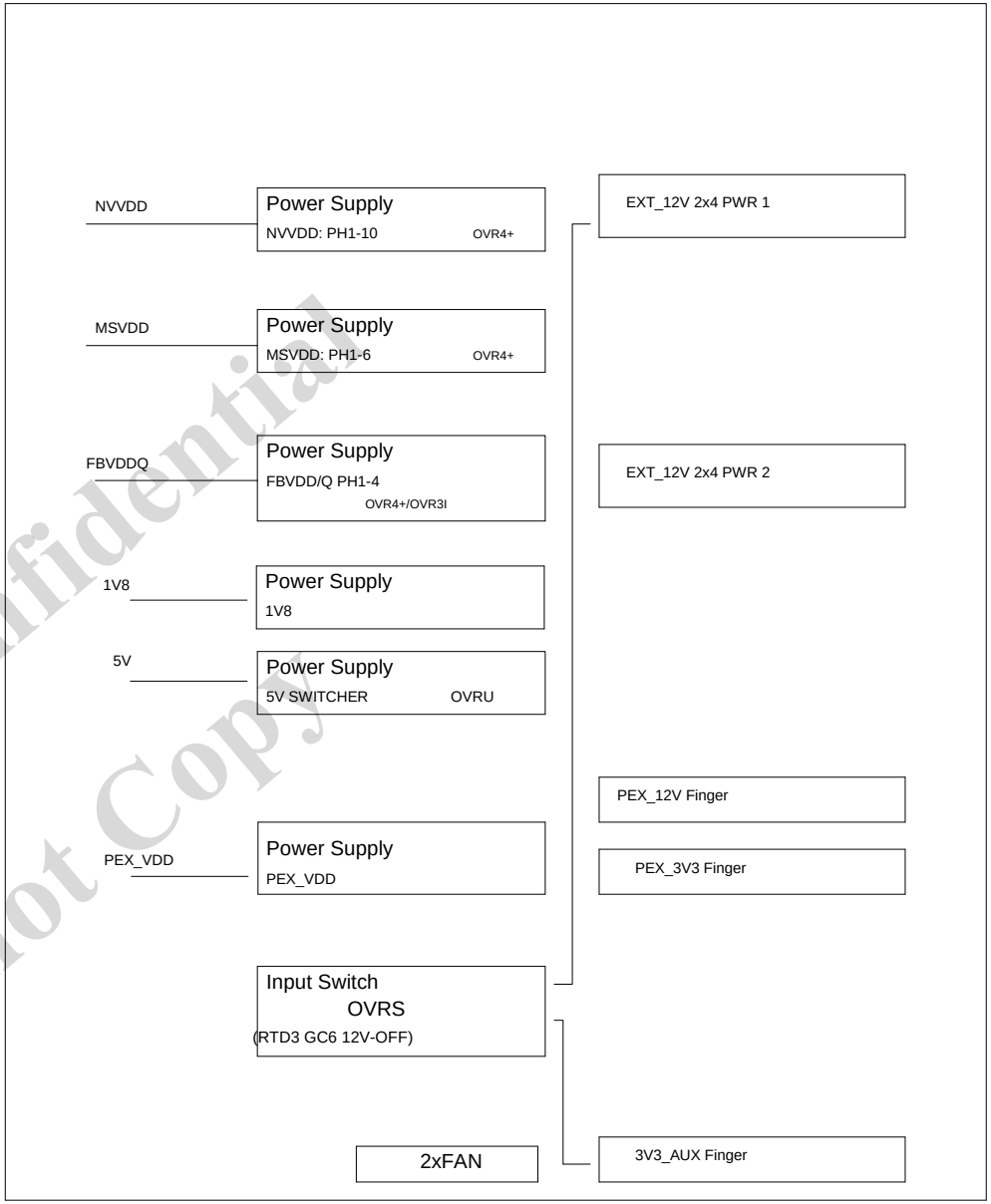

Gigabyte Confidential
Do not Copy

ALL NVIDIA DESIGN SPECIFICATIONS, REFERENCE SPECIFICATIONS, REFERENCE BOARDS, FILES, DRAWINGS, DIAGNOSTICS, LISTS AND OTHER DOCUMENTS OR INFORMATION (TOGETHER AND SEPARATELY, 'MATERIALS') ARE BEING PROVIDED 'AS IS'. THE MATERIALS MAY CONTAIN KNOWN AND UNKNOWN VIOLATIONS OR DEVIATIONS OF INDUSTRY STANDARDS AND SPECIFICATIONS. NVIDIA MAKES NO WARRANTIES, EXPRESSED, IMPLIED, STATUTORY OR OTHERWISE WITH RESPECT TO THE MATERIALS OR OTHERWISE, AND EXPRESSLY DISCLAIMS ALL IMPLIED WARRANTIES INCLUDING, WITHOUT LIMITATION, THE WARRANTIES OF DESIGN, OF NONINFRINGEMENT, MERCHANTABILITY OR FITNESS FOR A PARTICULAR PURPOSE, OR ARISING FROM A COURSE OF DEALING, TRADE USAGE, TRADE PRACTICE, OR INDUSTRY STANDARDS.

ASSEMBLY
PAGE DETAIL

<ASSEMBLY_DESCRIPTION>
BLOCK DIAGRAM

GIGABYTE		
Title: Block Diagram		
Size: Custom	Document Number: GV-N3080AORUSX W-10GD	Rev: 1.0
Date: Wednesday, September 30, 2020	Sheet 2 of 79	

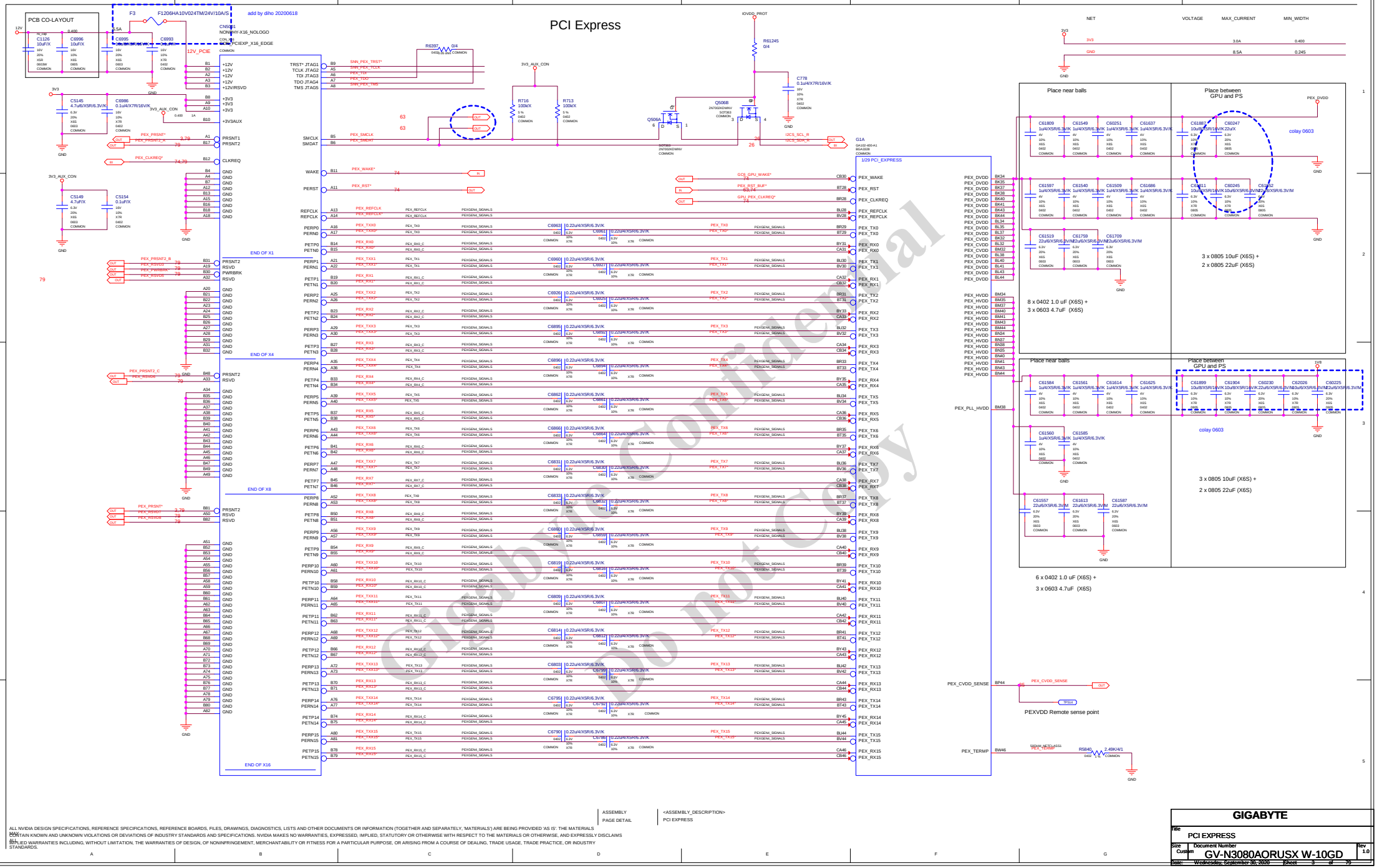

Gigabyte Confidential
Do not Copy

ASSEMBLY
PAGE DETAIL
<ASSEMBLY_DESCRIPTION>
PCI EXPRESS

ALL NVIDIA DESIGN SPECIFICATIONS, REFERENCE SPECIFICATIONS, REFERENCE BOARDS, FILES, DRAWINGS, DIAGNOSTICS, LISTS AND OTHER DOCUMENTS OR INFORMATION (TOGETHER AND SEPARATELY, 'MATERIALS') ARE BEING PROVIDED 'AS IS'. THE MATERIALS MAY CONTAIN KNOWN AND UNKNOWN VIOLATIONS OR DEVIATIONS OF INDUSTRY STANDARDS AND SPECIFICATIONS. NVIDIA MAKES NO WARRANTIES, EXPRESSED, IMPLIED, STATUTORY OR OTHERWISE WITH RESPECT TO THE MATERIALS OR OTHERWISE, AND EXPRESSLY DISCLAIMS ALL IMPLIED WARRANTIES INCLUDING, WITHOUT LIMITATION, THE WARRANTIES OF DESIGN, OF NONINFRINGEMENT, MERCHANTABILITY OR FITNESS FOR A PARTICULAR PURPOSE, OR ARISING FROM A COURSE OF DEALING, TRADE USAGE, TRADE PRACTICE, OR INDUSTRY STANDARDS.

GIGABYTE

Title: PCI EXPRESS

Size: Custom | Document Number: GV-N3080AORUSX W-10GD | Rev: 1.0

Date: Wednesday, September 30, 2020 | Sheet 3 of 79

MEMORY: GPU Partition A/B

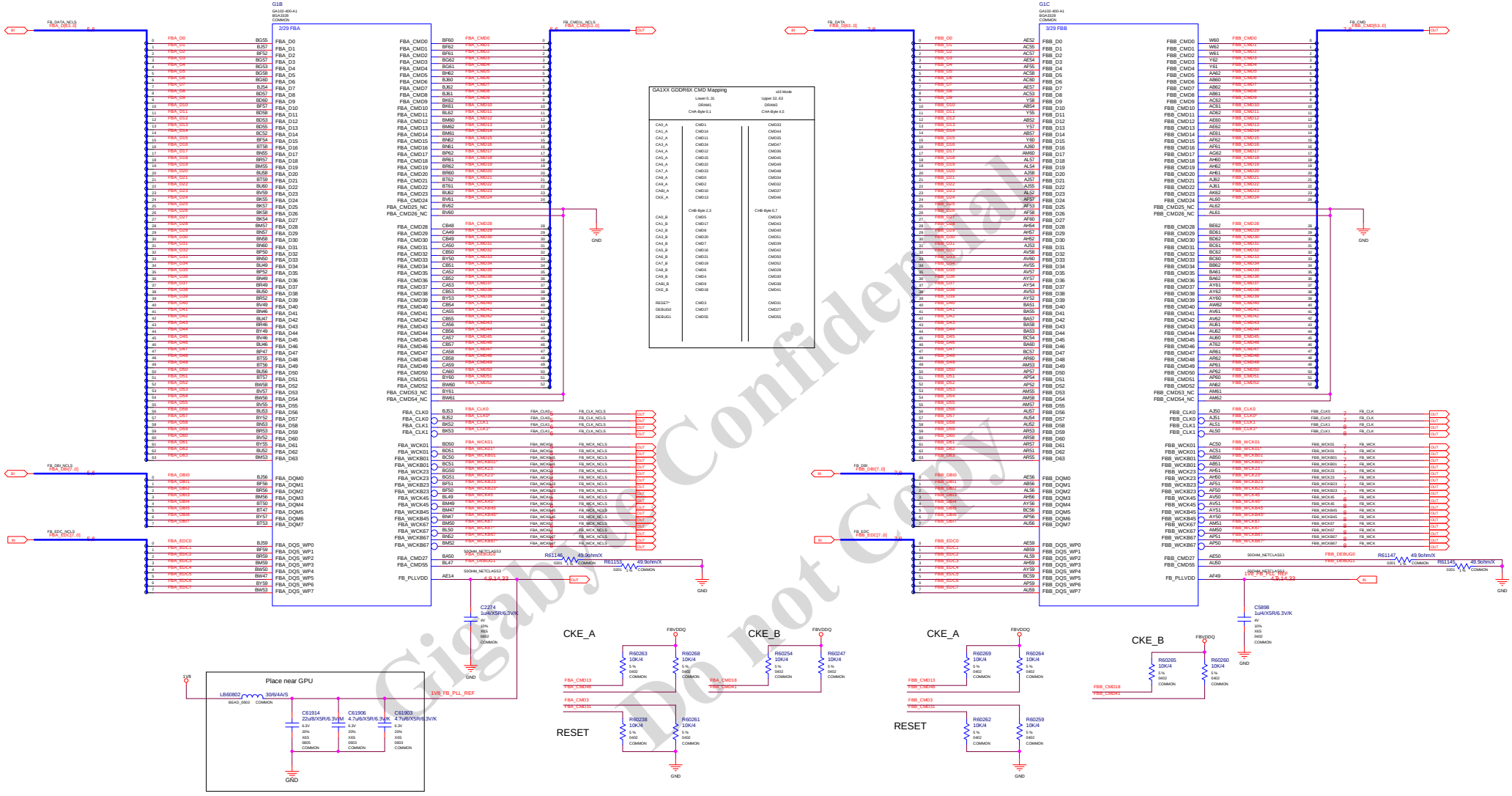

Gigabyte Confidential
Do not Copy

ALL NVIDIA DESIGN SPECIFICATIONS, REFERENCE SPECIFICATIONS, REFERENCE BOARDS, FILES, DRAWINGS, DIAGNOSTICS, LISTS AND OTHER DOCUMENTS OR INFORMATION (TOGETHER AND SEPARATELY, 'MATERIALS') ARE BEING PROVIDED 'AS IS'. THE MATERIALS MAY CONTAIN KNOWN AND UNKNOWN VIOLATIONS OR DEVIATIONS OF INDUSTRY STANDARDS AND SPECIFICATIONS. NVIDIA MAKES NO WARRANTIES, EXPRESSED, IMPLIED, STATUTORY OR OTHERWISE WITH RESPECT TO THE MATERIALS OR OTHERWISE, AND EXPRESSLY DISCLAIMS ALL IMPLIED WARRANTIES INCLUDING, WITHOUT LIMITATION, THE WARRANTIES OF DESIGN, OF NONINFRINGEMENT, MERCHANTABILITY OR FITNESS FOR A PARTICULAR PURPOSE, OR ARISING FROM A COURSE OF DEALING, TRADE USAGE, TRADE PRACTICE, OR INDUSTRY STANDARDS.

ASSEMBLY	<ASSEMBLY_DESCRIPTION>
PAGE DETAIL	MEMORY: GPU PARTITION A/B

GIGABYTE

Title	MEMORY: GPU Partition A/B	
Size: Custom	Document Number: GV-N3080AORUSX W-10GD	Rev: 1.0
Date: Wednesday, September 30, 2020	Sheet 4 of 79	

MEMORY: FBA Partition 31..0

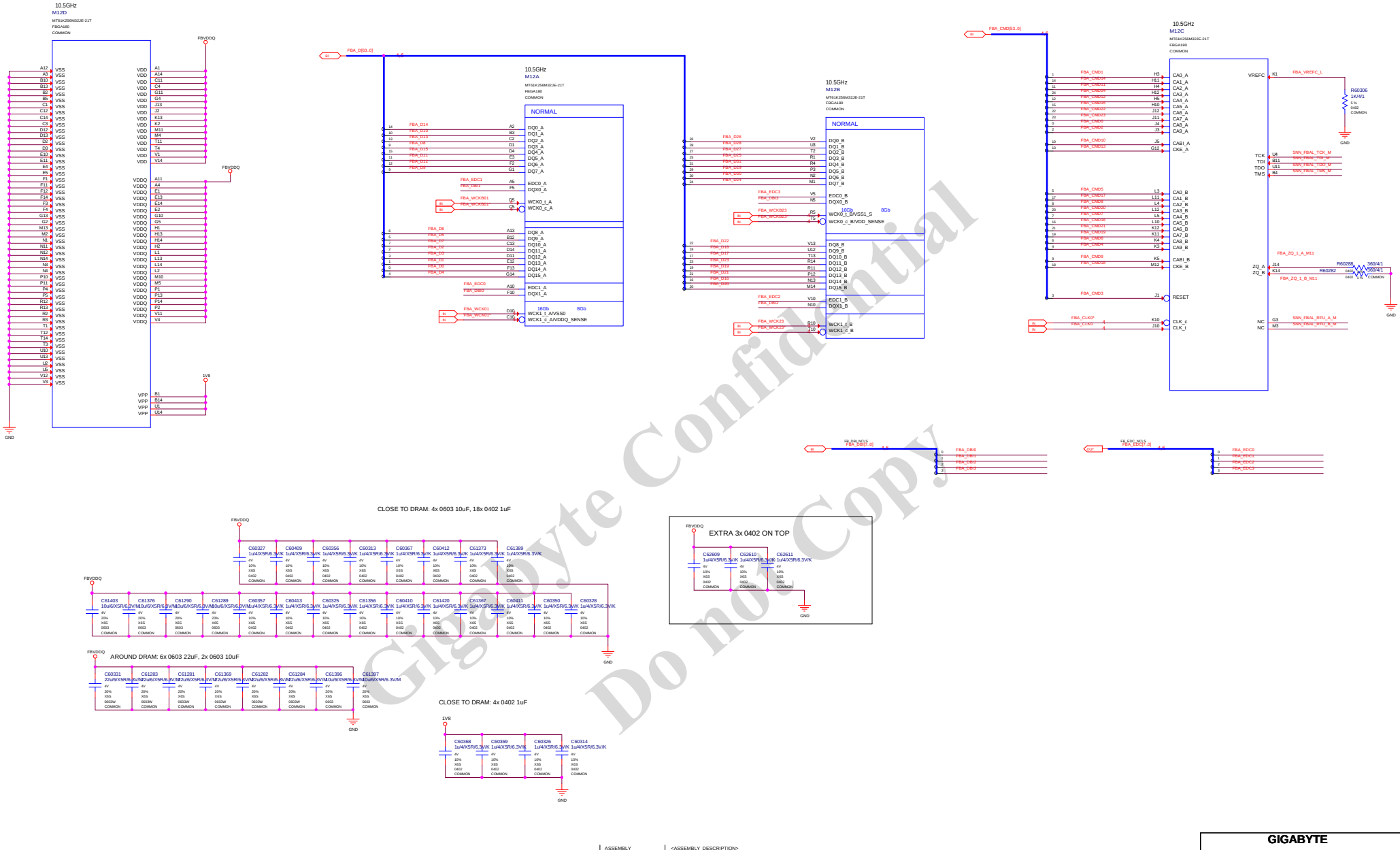

Gigabyte Confidential
Do not Copy

ASSEMBLY <ASSEMBLY_DESCRIPTION>
PAGE DETAIL MEMORY: FBA PARTITION[31:0]

ALL NVIDIA DESIGN SPECIFICATIONS, REFERENCE SPECIFICATIONS, REFERENCE BOARDS, FILES, DRAWINGS, DIAGNOSTICS, LISTS AND OTHER DOCUMENTS OR INFORMATION (TOGETHER AND SEPARATELY, 'MATERIALS') ARE BEING PROVIDED 'AS IS'. THE MATERIALS MAY CONTAIN KNOWN AND UNKNOWN VIOLATIONS OR DEVIATIONS OF INDUSTRY STANDARDS AND SPECIFICATIONS. NVIDIA MAKES NO WARRANTIES, EXPRESSED, IMPLIED, STATUTORY OR OTHERWISE WITH RESPECT TO THE MATERIALS OR OTHERWISE, AND EXPRESSLY DISCLAIMS ANY IMPLIED WARRANTIES INCLUDING, WITHOUT LIMITATION, THE WARRANTIES OF DESIGN, OF NONINFRINGEMENT, MERCHANTABILITY OR FITNESS FOR A PARTICULAR PURPOSE, OR ARISING FROM A COURSE OF DEALING, TRADE USAGE, TRADE PRACTICE, OR INDUSTRY STANDARDS.

GIGABYTE

Title: MEMORY: FBA Partition 31..0

Size	Document Number	Rev
Custom	GV-N3080AORUSX W-10GD	1.0

Date: Wednesday, September 30, 2020 Sheet 5 of 79

MEMORY: FBA Partition 63..32

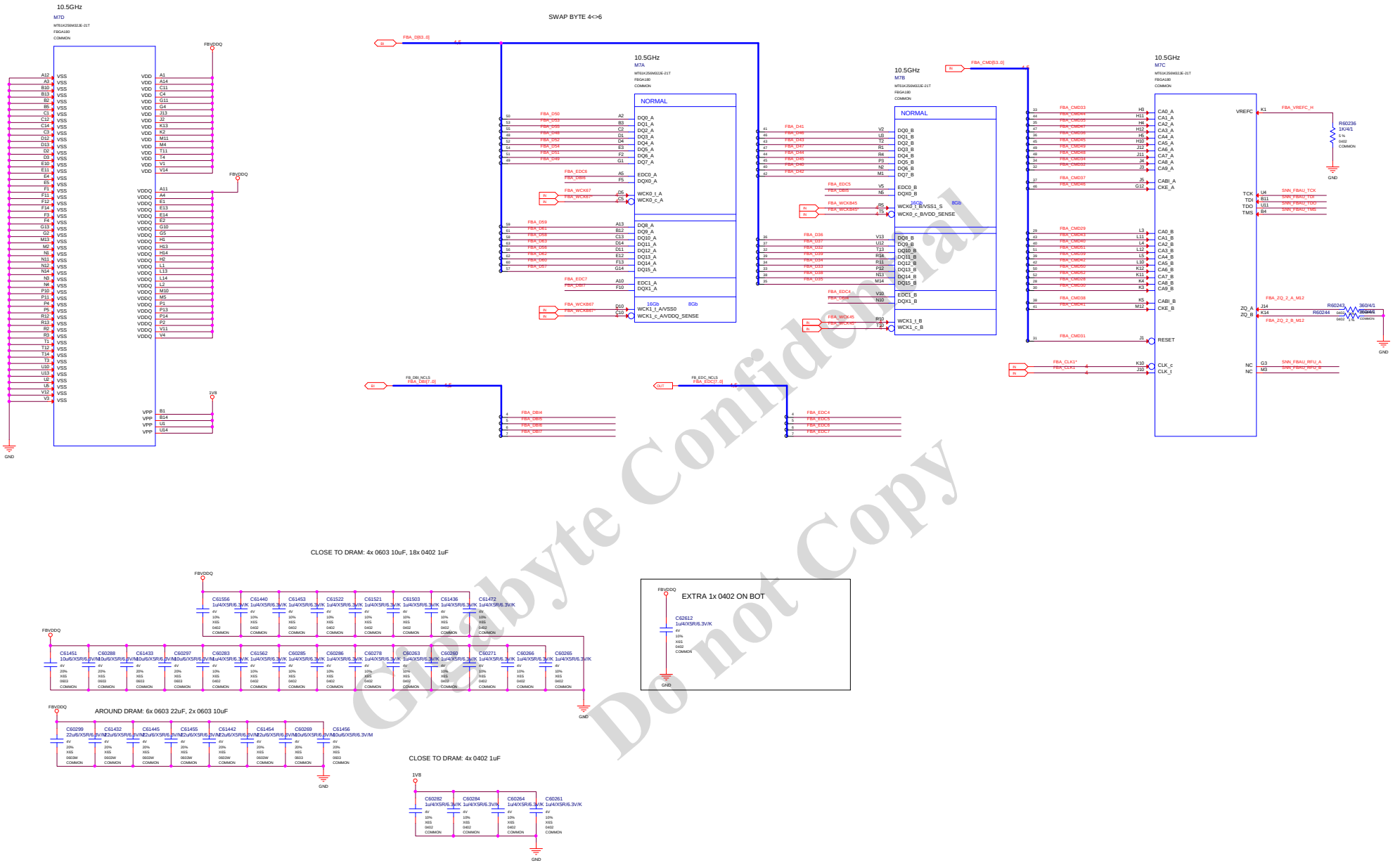

Gigabyte Confidential
Do not Copy

ASSEMBLY <ASSEMBLY_DESCRIPTION>
PAGE DETAIL MEMORY: FBA PARTITION[63:32]

ALL NVIDIA DESIGN SPECIFICATIONS, REFERENCE SPECIFICATIONS, REFERENCE BOARDS, FILES, DRAWINGS, DIAGNOSTICS, LISTS AND OTHER DOCUMENTS OR INFORMATION (TOGETHER AND SEPARATELY, 'MATERIALS') ARE BEING PROVIDED 'AS IS'. THE MATERIALS MAY CONTAIN KNOWN AND UNKNOWN VIOLATIONS OR DEVIATIONS OF INDUSTRY STANDARDS AND SPECIFICATIONS. NVIDIA MAKES NO WARRANTIES, EXPRESSED, IMPLIED, STATUTORY OR OTHERWISE WITH RESPECT TO THE MATERIALS OR OTHERWISE, AND EXPRESSLY DISCLAIMS ALL IMPLIED WARRANTIES INCLUDING, WITHOUT LIMITATION, THE WARRANTIES OF DESIGN, OF NONINFRINGEMENT, MERCHANTABILITY OR FITNESS FOR A PARTICULAR PURPOSE, OR ARISING FROM A COURSE OF DEALING, TRADE USAGE, TRADE PRACTICE, OR INDUSTRY STANDARDS.

GIGABYTE

Title	MEMORY: FBA Partition 63..32		
Size: Custom	Document Number: GV-N3080AORUSX W-10GD		Rev: 1.0
Date: Wednesday, September 30, 2020	Sheet 6 of 79		

MEMORY: FBB Partition 31..0

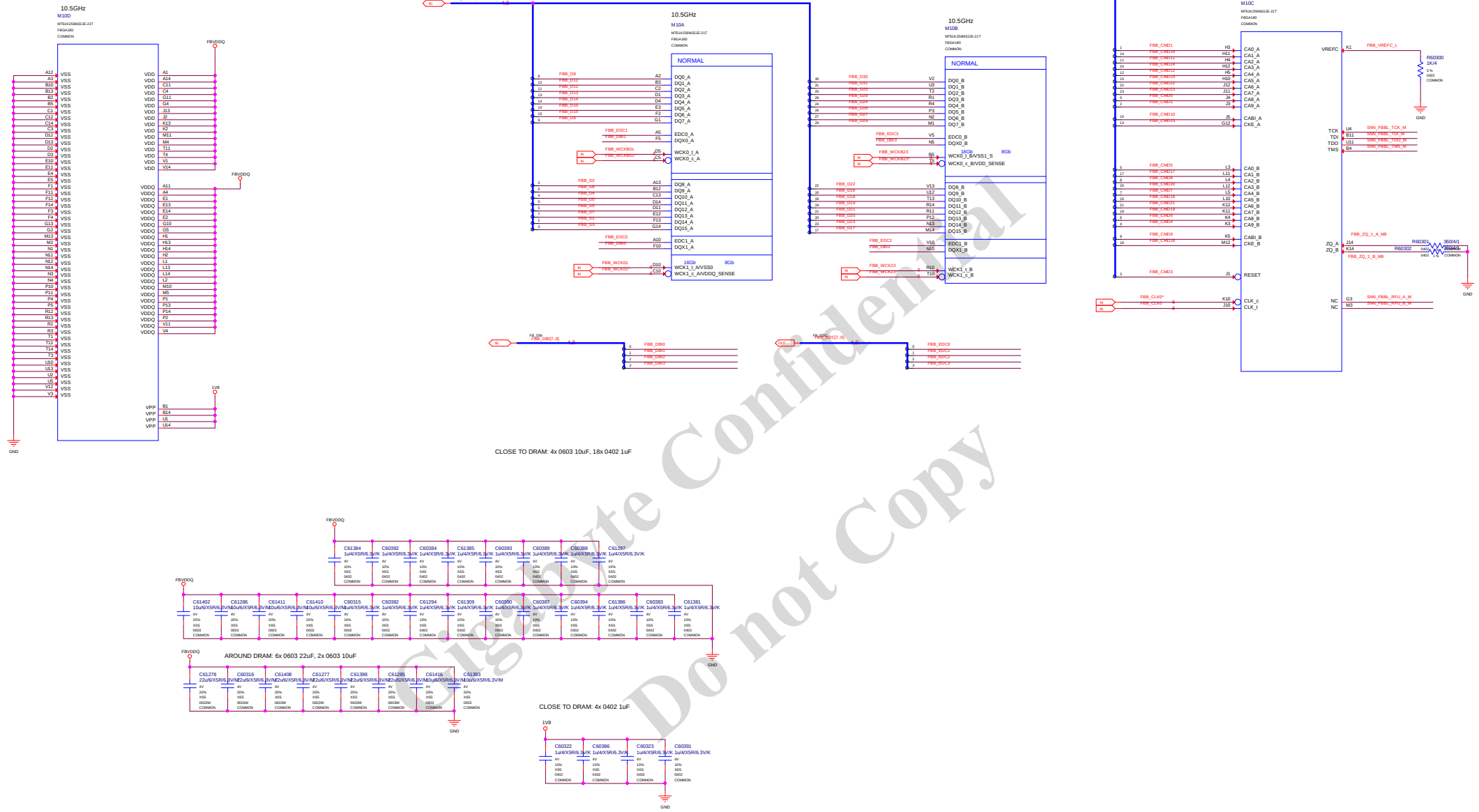

Gigabyte Confidential
Do not Copy

ASSEMBLY
PAGE DETAIL

<ASSEMBLY_DESCRIPTION>
MEMORY: FBB PARTITION[31:0]

ALL NVIDIA DESIGN SPECIFICATIONS, REFERENCE SPECIFICATIONS, REFERENCE BOARDS, FILES, DRAWINGS, DIAGNOSTICS, LISTS AND OTHER DOCUMENTS OR INFORMATION (TOGETHER AND SEPARATELY, 'MATERIALS') ARE BEING PROVIDED 'AS IS'. THE MATERIALS MAY CONTAIN KNOWN AND UNKNOWN VIOLATIONS OR DEVIATIONS OF INDUSTRY STANDARDS AND SPECIFICATIONS. NVIDIA MAKES NO WARRANTIES, EXPRESSED, IMPLIED, STATUTORY OR OTHERWISE WITH RESPECT TO THE MATERIALS OR OTHERWISE, AND EXPRESSLY DISCLAIMS ANY IMPLIED WARRANTIES INCLUDING, WITHOUT LIMITATION, THE WARRANTIES OF DESIGN, OF NONINFRINGEMENT, MERCHANTABILITY OR FITNESS FOR A PARTICULAR PURPOSE, OR ARISING FROM A COURSE OF DEALING, TRADE USAGE, TRADE PRACTICE, OR INDUSTRY STANDARDS.

GIGABYTE

Title: MEMORY: FBB Partition 31..0

Size	Document Number	Rev
Custom	GV-N3080AORUSX W-10GD	1.0

Date: Wednesday, September 30, 2020 Sheet 7 of 79

MEMORY: FBB Partition 63..32

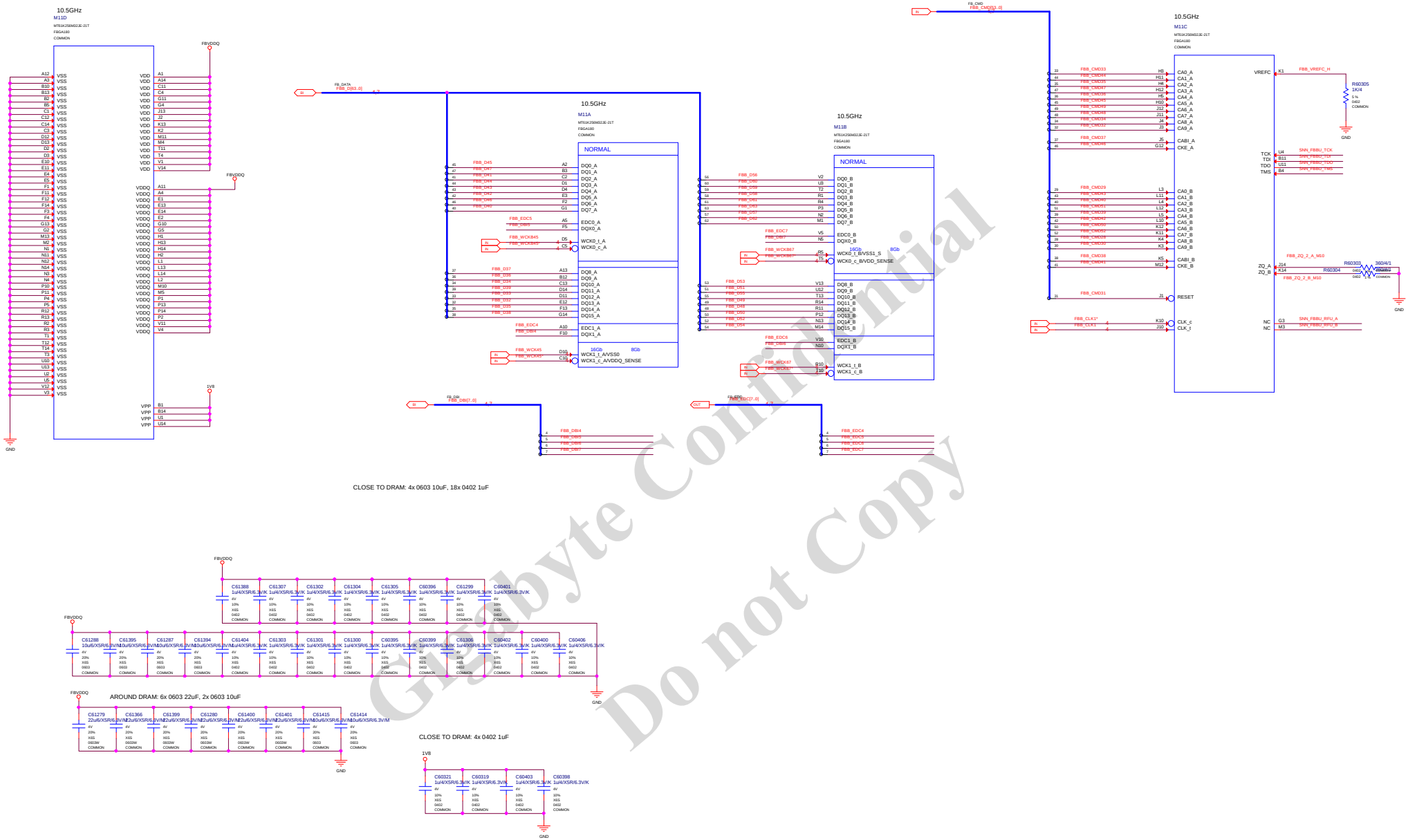

Gigabyte Confidential
Do not Copy

ASSEMBLY	<ASSEMBLY_DESCRIPTION>
PAGE DETAIL	MEMORY: FBB PARTITION[63:32]

ALL NVIDIA DESIGN SPECIFICATIONS, REFERENCE SPECIFICATIONS, REFERENCE BOARDS, FILES, DRAWINGS, DIAGNOSTICS, LISTS AND OTHER DOCUMENTS OR INFORMATION (TOGETHER AND SEPARATELY, 'MATERIALS') ARE BEING PROVIDED 'AS IS'. THE MATERIALS MAY CONTAIN KNOWN AND UNKNOWN VIOLATIONS OR DEVIATIONS OF INDUSTRY STANDARDS AND SPECIFICATIONS. NVIDIA MAKES NO WARRANTIES, EXPRESSED, IMPLIED, STATUTORY OR OTHERWISE WITH RESPECT TO THE MATERIALS OR OTHERWISE, AND EXPRESSLY DISCLAIMS ANY IMPLIED WARRANTIES INCLUDING, WITHOUT LIMITATION, THE WARRANTIES OF DESIGN, OF NONINFRINGEMENT, MERCHANTABILITY OR FITNESS FOR A PARTICULAR PURPOSE, OR ARISING FROM A COURSE OF DEALING, TRADE USAGE, TRADE PRACTICE, OR INDUSTRY STANDARDS.

GIGABYTE

Title	MEMORY: FBB Partition 63..32	
Size: Custom	Document Number: GV-N3080AORUSX W-10GD	Rev: 1.0
Date: Wednesday, September 30, 2020	Sheet 8 of 79	

MEMORY: GPU Partition C/D

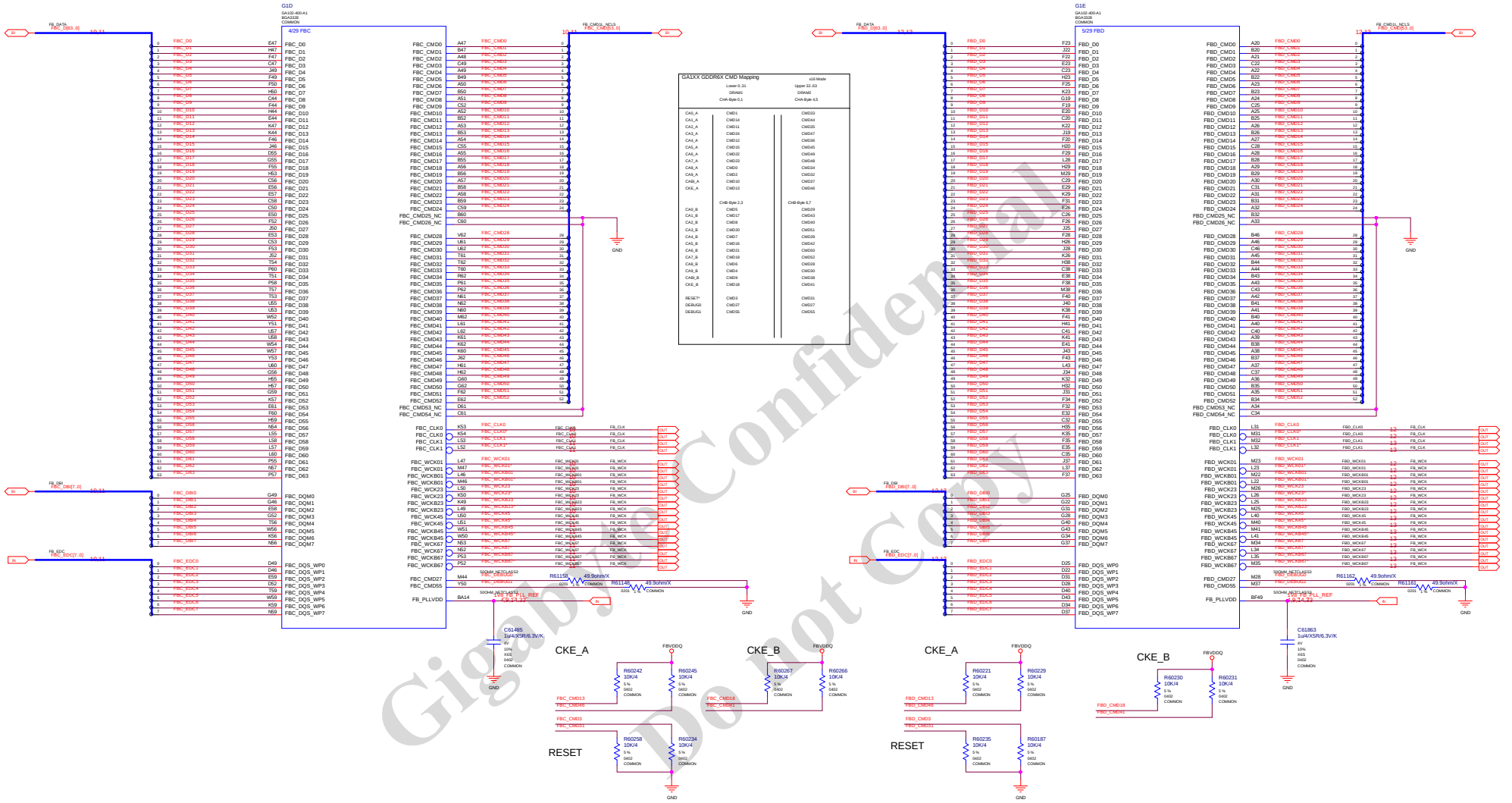

Gigabyte Confidential
Do not Copy

ASSEMBLY	<ASSEMBLY_DESCRIPTION>
PAGE DETAIL	MEMORY: GPU PARTITION C/D

ALL NVIDIA DESIGN SPECIFICATIONS, REFERENCE SPECIFICATIONS, REFERENCE BOARDS, FILES, DRAWINGS, DIAGNOSTICS, LISTS AND OTHER DOCUMENTS OR INFORMATION (TOGETHER AND SEPARATELY, 'MATERIALS') ARE BEING PROVIDED 'AS IS'. THE MATERIALS MAY CONTAIN KNOWN AND UNKNOWN VIOLATIONS OR DEVIATIONS OF INDUSTRY STANDARDS AND SPECIFICATIONS. NVIDIA MAKES NO WARRANTIES, EXPRESSED, IMPLIED, STATUTORY OR OTHERWISE WITH RESPECT TO THE MATERIALS OR OTHERWISE, AND EXPRESSLY DISCLAIMS ALL IMPLIED WARRANTIES INCLUDING, WITHOUT LIMITATION, THE WARRANTIES OF DESIGN, OF NONINFRINGEMENT, MERCHANTABILITY OR FITNESS FOR A PARTICULAR PURPOSE, OR ARISING FROM A COURSE OF DEALING, TRADE USAGE, TRADE PRACTICE, OR INDUSTRY STANDARDS.

GIGABYTE

Title	MEMORY: GPU Partition C/D	
Size: Custom	Document Number: GV-N3080AORUSX W-10GD	Rev: 1.0
Date: Wednesday, September 30, 2020	Sheet 9 of 79	

MEMORY: FBC Partition 31..0

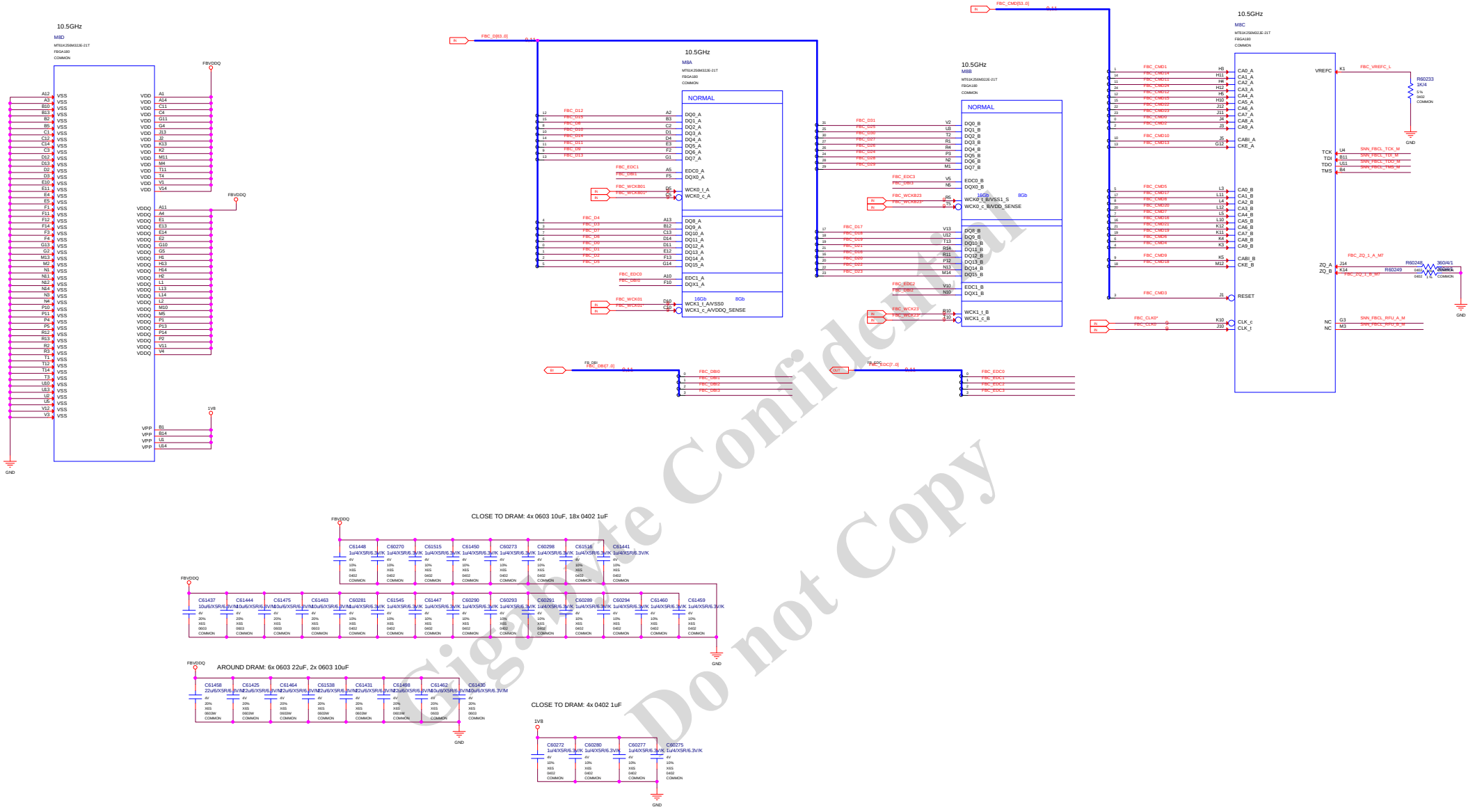

CLOSE TO DRAM: 4x 0603 10uF, 18x 0402 1uF

AROUND DRAM: 6x 0603 22uF, 2x 0603 10uF

CLOSE TO DRAM: 4x 0402 1uF

Gigabyte Confidential
Do not Copy

ASSEMBLY	<ASSEMBLY_DESCRIPTION>
PAGE DETAIL	MEMORY: FBC PARTITION[31:0]

ALL NVIDIA DESIGN SPECIFICATIONS, REFERENCE SPECIFICATIONS, REFERENCE BOARDS, FILES, DRAWINGS, DIAGNOSTICS, LISTS AND OTHER DOCUMENTS OR INFORMATION (TOGETHER AND SEPARATELY, 'MATERIALS') ARE BEING PROVIDED 'AS IS'. THE MATERIALS CONTAIN KNOWN AND UNKNOWN VIOLATIONS OR DEVIATIONS OF INDUSTRY STANDARDS AND SPECIFICATIONS. NVIDIA MAKES NO WARRANTIES, EXPRESSED, IMPLIED, STATUTORY OR OTHERWISE WITH RESPECT TO THE MATERIALS OR OTHERWISE, AND EXPRESSLY DISCLAIMS ALL IMPLIED WARRANTIES INCLUDING, WITHOUT LIMITATION, THE WARRANTIES OF DESIGN, OF NONINFRINGEMENT, MERCHANTABILITY OR FITNESS FOR A PARTICULAR PURPOSE, OR ARISING FROM A COURSE OF DEALING, TRADE USAGE, TRADE PRACTICE, OR INDUSTRY STANDARDS.

GIGABYTE

Title	MEMORY: FBC Partition 31..0	
Size: Custom	Document Number: GV-N3080AORUSX W-10GD	Rev: 1.0
Date: Wednesday, September 30, 2020	Sheet 10 of 79	

MEMORY: FBC Partition 63..32

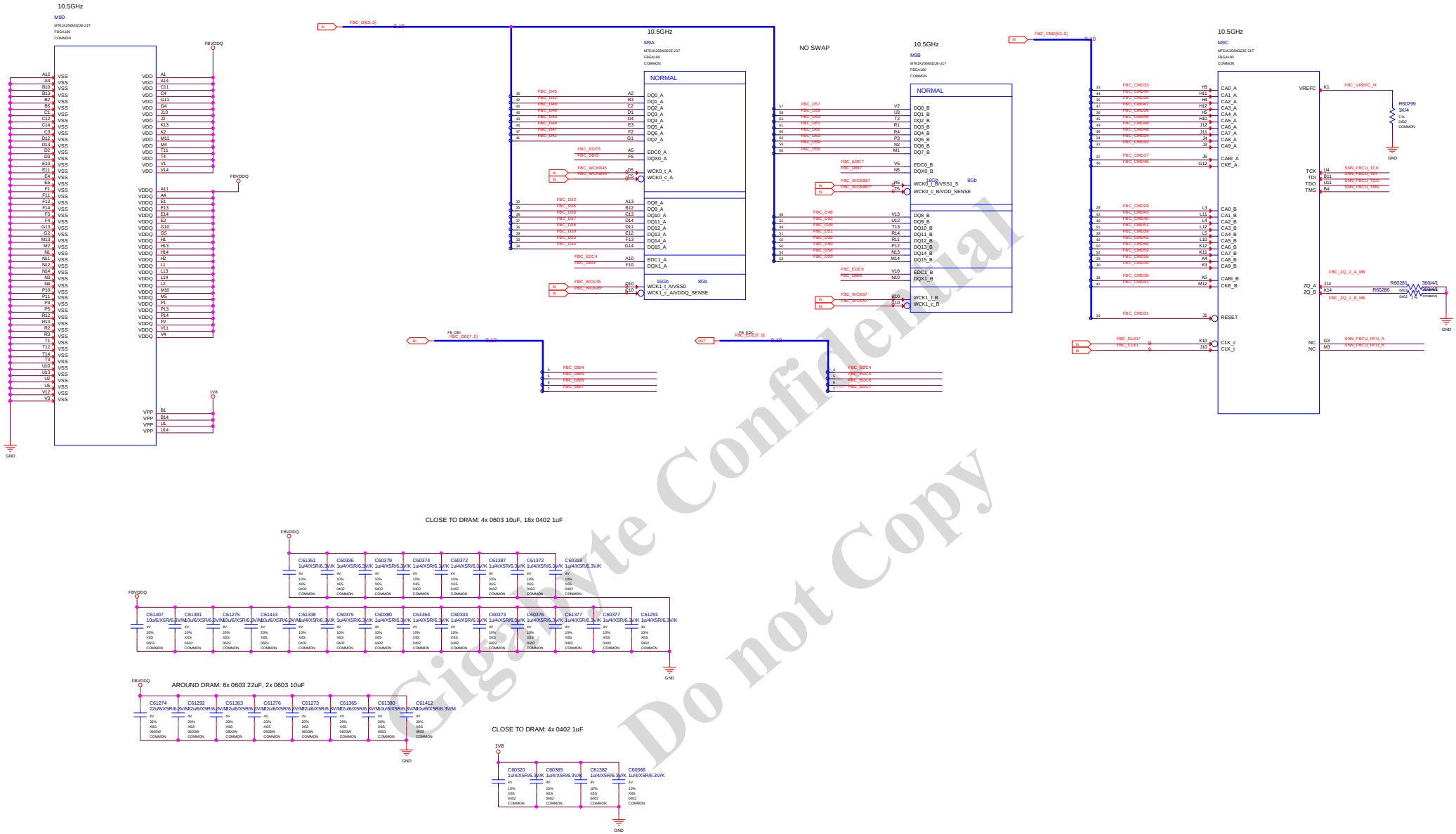

CLOSE TO DRAM: 4x 0603 10uF, 18x 0402 1uF

AROUND DRAM: 6x 0603 22uF, 2x 0603 10uF

CLOSE TO DRAM: 4x 0402 1uF

Gigabyte Confidential
Do not Copy

ASSEMBLY	<ASSEMBLY_DESCRIPTION>
PAGE DETAIL	MEMORY: FBC PARTITION[63:32]

ALL NVIDIA DESIGN SPECIFICATIONS, REFERENCE SPECIFICATIONS, REFERENCE BOARDS, FILES, DRAWINGS, DIAGNOSTICS, LISTS AND OTHER DOCUMENTS OR INFORMATION (TOGETHER AND SEPARATELY, 'MATERIALS') ARE BEING PROVIDED 'AS IS'. THE MATERIALS MAY CONTAIN KNOWN AND UNKNOWN VIOLATIONS OR DEVIATIONS OF INDUSTRY STANDARDS AND SPECIFICATIONS. NVIDIA MAKES NO WARRANTIES, EXPRESSED, IMPLIED, STATUTORY OR OTHERWISE WITH RESPECT TO THE MATERIALS OR OTHERWISE, AND EXPRESSLY DISCLAIMS ALL IMPLIED WARRANTIES INCLUDING, WITHOUT LIMITATION, THE WARRANTIES OF DESIGN, OF NONINFRINGEMENT, MERCHANTABILITY OR FITNESS FOR A PARTICULAR PURPOSE, OR ARISING FROM A COURSE OF DEALING, TRADE USAGE, TRADE PRACTICE, OR INDUSTRY STANDARDS.

GIGABYTE

Title: MEMORY: FBC Partition 63..32

Size	Document Number	Rev
Custom	GV-N3080AORUSX W-10GD	1.0

Date: Wednesday, September 30, 2020 Sheet 11 of 79

MEMORY: FBD Partition 31..0

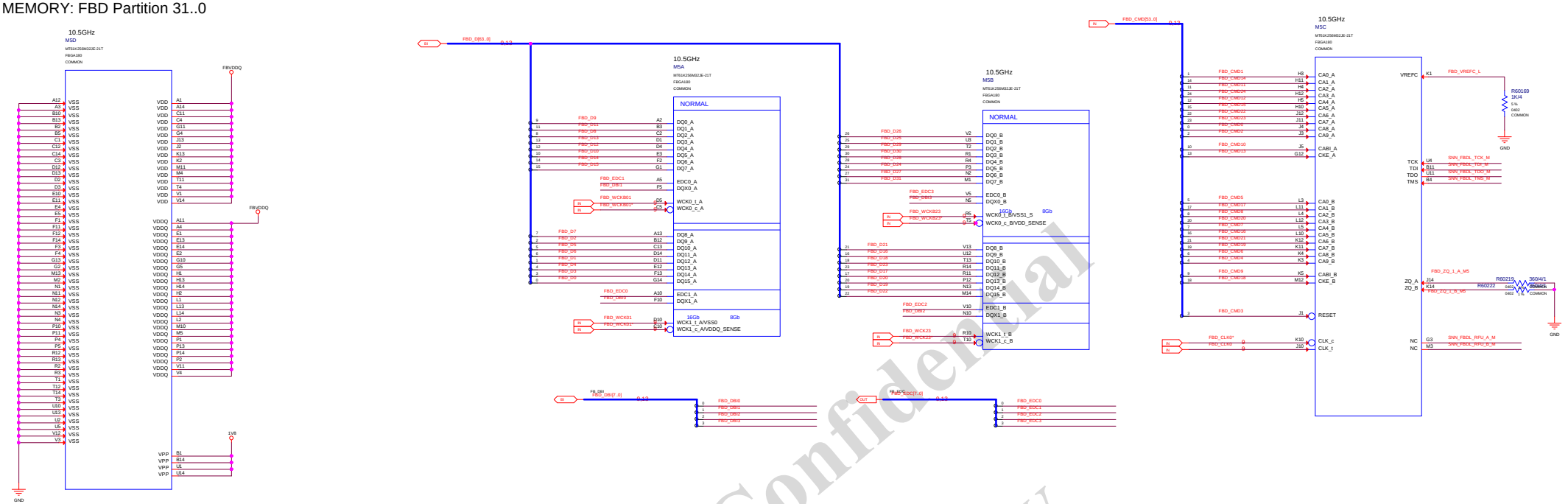

CLOSE TO DRAM: 4x 0603 10uF, 18x 0402 1uF

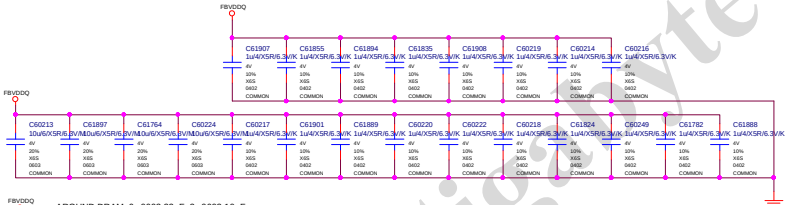

AROUND DRAM: 6x 0603 22uF, 2x 0603 10uF

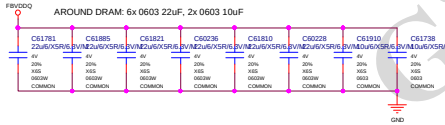

CLOSE TO DRAM: 4x 0402 1uF

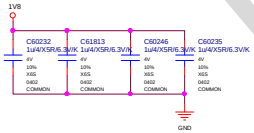

Gigabyte Confidential
Do not Copy

ASSEMBLY <ASSEMBLY_DESCRIPTION>
PAGE DETAIL MEMORY: FBD PARTITION[31:0]

ALL NVIDIA DESIGN SPECIFICATIONS, REFERENCE SPECIFICATIONS, REFERENCE BOARDS, FILES, DRAWINGS, DIAGNOSTICS, LISTS AND OTHER DOCUMENTS OR INFORMATION (TOGETHER AND SEPARATELY, 'MATERIALS') ARE BEING PROVIDED 'AS IS'. THE MATERIALS MAY CONTAIN KNOWN AND UNKNOWN VIOLATIONS OR DEVIATIONS OF INDUSTRY STANDARDS AND SPECIFICATIONS. NVIDIA MAKES NO WARRANTIES, EXPRESSED, IMPLIED, STATUTORY OR OTHERWISE WITH RESPECT TO THE MATERIALS OR OTHERWISE, AND EXPRESSLY DISCLAIMS ANY IMPLIED WARRANTIES INCLUDING, WITHOUT LIMITATION, THE WARRANTIES OF DESIGN, OF NONINFRINGEMENT, MERCHANTABILITY OR FITNESS FOR A PARTICULAR PURPOSE, OR ARISING FROM A COURSE OF DEALING, TRADE USAGE, TRADE PRACTICE, OR INDUSTRY STANDARDS.

GIGABYTE			
Title: MEMORY: FBD Partition 31..0			
Size: Custom	Document Number: GV-N3080AORUSX W-10GD		Rev: 1.0
Date: Wednesday, September 30, 2020	Sheet 12 of 79		

MEMORY: FBD Partition 63..32

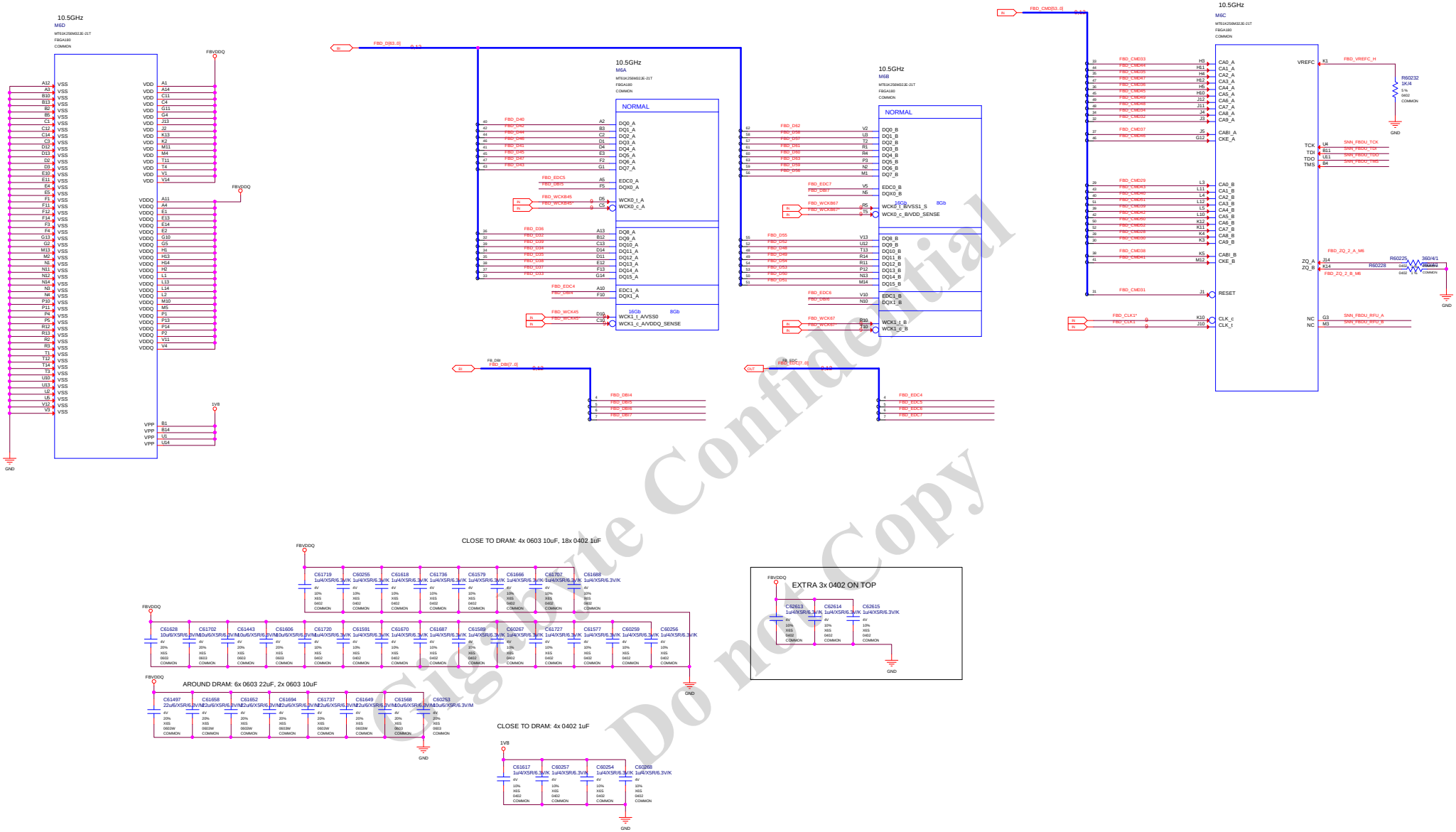

Gigabyte Confidential
Do not Copy

ASSEMBLY
PAGE DETAIL

<ASSEMBLY_DESCRIPTION>
MEMORY: FBD PARTITION[63:32]

ALL NVIDIA DESIGN SPECIFICATIONS, REFERENCE SPECIFICATIONS, REFERENCE BOARDS, FILES, DRAWINGS, DIAGNOSTICS, LISTS AND OTHER DOCUMENTS OR INFORMATION (TOGETHER AND SEPARATELY, 'MATERIALS') ARE BEING PROVIDED 'AS IS'. THE MATERIALS CONTAIN KNOWN AND UNKNOWN VIOLATIONS OR DEVIATIONS OF INDUSTRY STANDARDS AND SPECIFICATIONS. NVIDIA MAKES NO WARRANTIES, EXPRESSED, IMPLIED, STATUTORY OR OTHERWISE WITH RESPECT TO THE MATERIALS OR OTHERWISE, AND EXPRESSLY DISCLAIMS ALL IMPLIED WARRANTIES INCLUDING, WITHOUT LIMITATION, THE WARRANTIES OF DESIGN, OF NONINFRINGEMENT, MERCHANTABILITY OR FITNESS FOR A PARTICULAR PURPOSE, OR ARISING FROM A COURSE OF DEALING, TRADE USAGE, TRADE PRACTICE, OR INDUSTRY STANDARDS.

GIGABYTE

Title: MEMORY: FBD Partition 63..32

Size	Document Number	Rev
Custom	GV-N3080AORUSX W-10GD	1.0

Date: Wednesday, September 30, 2020 Sheet 13 of 79

MEMORY: GPU Partition E/F

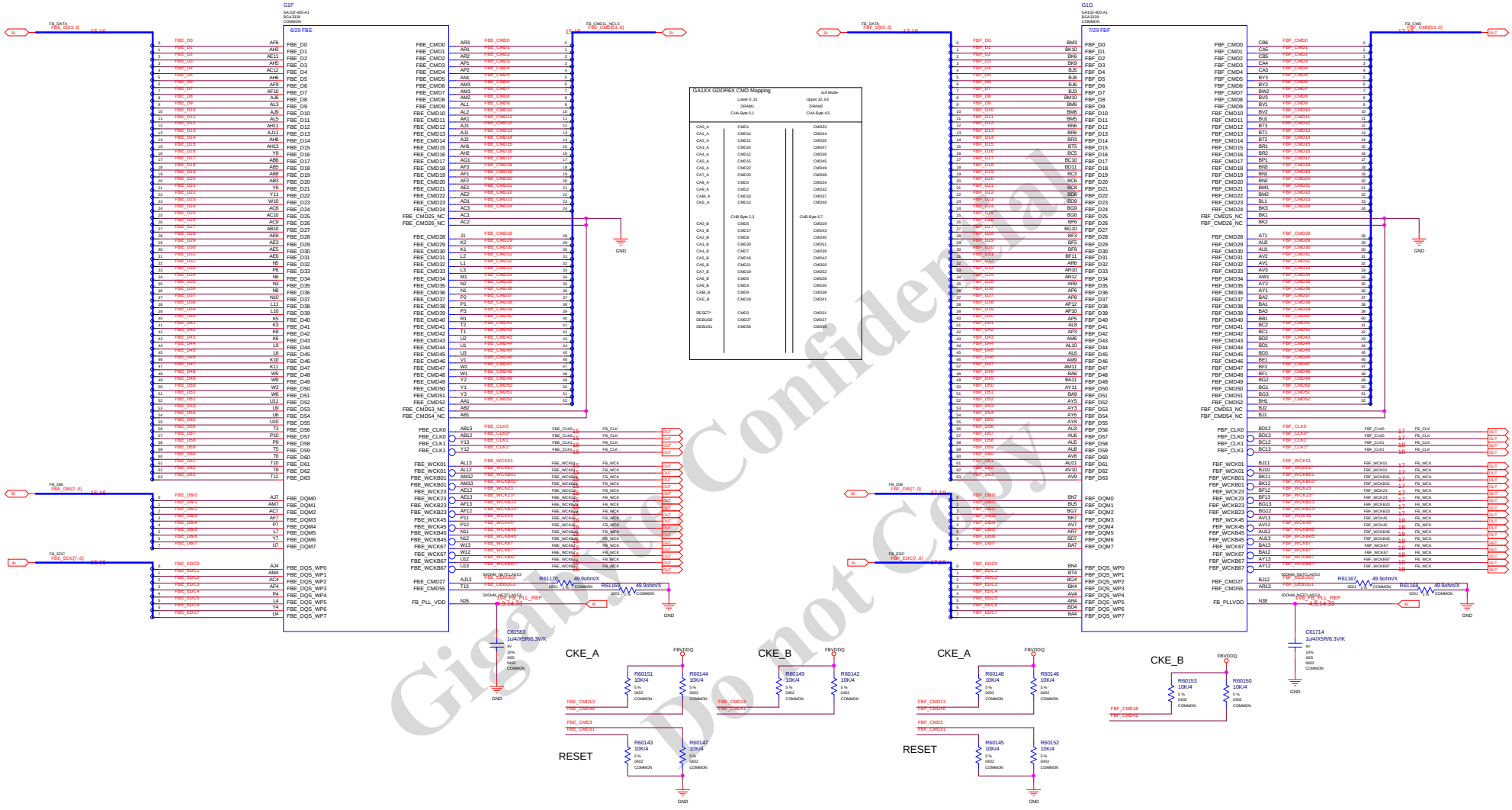

Gigabyte Confidential
Do not Copy

ASSEMBLY
PAGE DETAIL
<ASSEMBLY_DESCRIPTION>
MEMORY: GPU PARTITION E/F

ALL NVIDIA DESIGN SPECIFICATIONS, REFERENCE SPECIFICATIONS, REFERENCE BOARDS, FILES, DRAWINGS, DIAGNOSTICS, LISTS AND OTHER DOCUMENTS OR INFORMATION (TOGETHER AND SEPARATELY, 'MATERIALS') ARE BEING PROVIDED 'AS IS'. THE MATERIALS MAY CONTAIN KNOWN AND UNKNOWN VIOLATIONS OR DEVIATIONS OF INDUSTRY STANDARDS AND SPECIFICATIONS. NVIDIA MAKES NO WARRANTIES, EXPRESSED, IMPLIED, STATUTORY OR OTHERWISE WITH RESPECT TO THE MATERIALS OR OTHERWISE, AND EXPRESSLY DISCLAIMS ANY IMPLIED WARRANTIES INCLUDING, WITHOUT LIMITATION, THE WARRANTIES OF DESIGN, OF NONINFRINGEMENT, MERCHANTABILITY OR FITNESS FOR A PARTICULAR PURPOSE, OR ARISING FROM A COURSE OF DEALING, TRADE USAGE, TRADE PRACTICE, OR INDUSTRY STANDARDS.

GIGABYTE

Title	MEMORY: GPU Partition E/F	
Size: Custom	Document Number: GV-N3080AORUSX W-10GD	Rev: 1.0
Date: Wednesday, September 30, 2020	Sheet 14 of 79	

MEMORY: FBE Partition 31..0

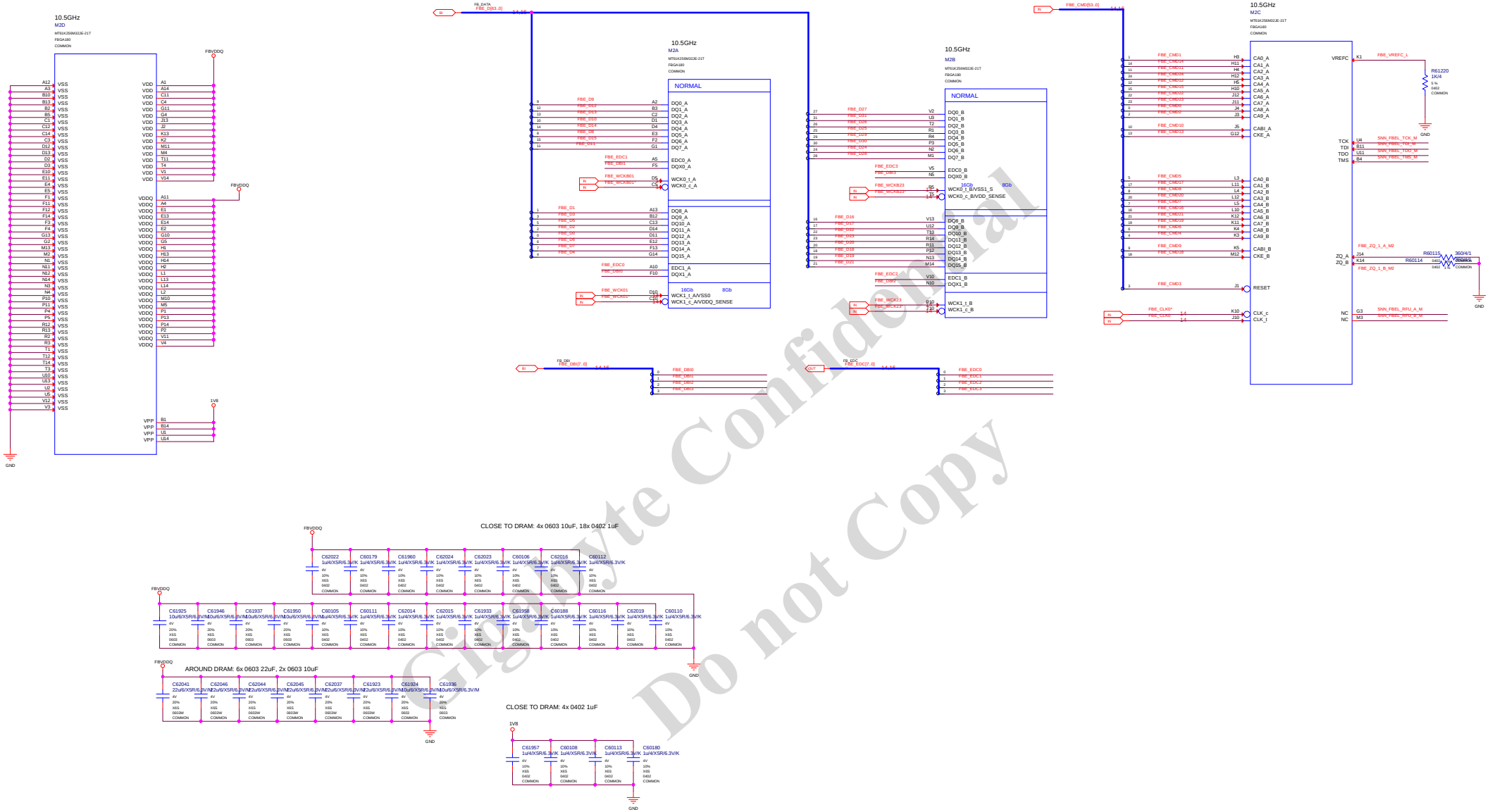

Gigabyte Confidential
Do not Copy

ASSEMBLY	<ASSEMBLY_DESCRIPTION>
PAGE DETAIL	MEMORY: FBE PARTITION[31:0]

ALL NVIDIA DESIGN SPECIFICATIONS, REFERENCE SPECIFICATIONS, REFERENCE BOARDS, FILES, DRAWINGS, DIAGNOSTICS, LISTS AND OTHER DOCUMENTS OR INFORMATION (TOGETHER AND SEPARATELY, 'MATERIALS') ARE BEING PROVIDED 'AS IS'. THE MATERIALS MAY CONTAIN KNOWN AND UNKNOWN VIOLATIONS OR DEVIATIONS OF INDUSTRY STANDARDS AND SPECIFICATIONS. NVIDIA MAKES NO WARRANTIES, EXPRESSED, IMPLIED, STATUTORY OR OTHERWISE WITH RESPECT TO THE MATERIALS OR OTHERWISE, AND EXPRESSLY DISCLAIMS ANY IMPLIED WARRANTIES INCLUDING, WITHOUT LIMITATION, THE WARRANTIES OF DESIGN, OF NONINFRINGEMENT, MERCHANTABILITY OR FITNESS FOR A PARTICULAR PURPOSE, OR ARISING FROM A COURSE OF DEALING, TRADE USAGE, TRADE PRACTICE, OR INDUSTRY STANDARDS.

GIGABYTE

Title	MEMORY: FBE Partition 31..0	
Size: Custom	Document Number: GV-N3080AORUSX W-10GD	Rev: 1.0
Date: Wednesday, September 30, 2020	Sheet 15 of 79	

MEMORY: FBE Partition 63..32

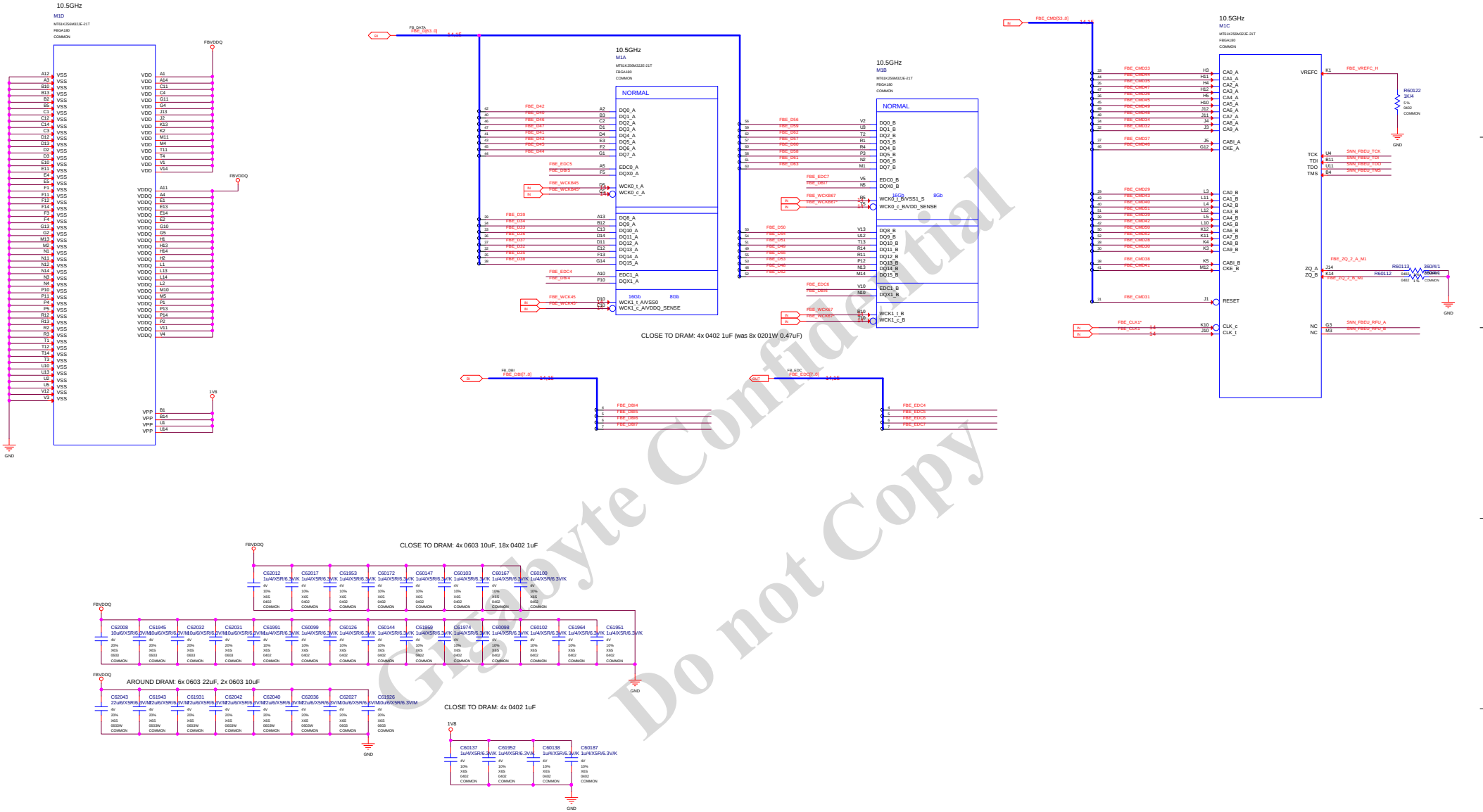

Gigabyte Confidential
Do not Copy

ASSEMBLY <ASSEMBLY_DESCRIPTION>
PAGE DETAIL MEMORY: FBE PARTITION[63:32]

ALL NVIDIA DESIGN SPECIFICATIONS, REFERENCE SPECIFICATIONS, REFERENCE BOARDS, FILES, DRAWINGS, DIAGNOSTICS, LISTS AND OTHER DOCUMENTS OR INFORMATION (TOGETHER AND SEPARATELY, 'MATERIALS') ARE BEING PROVIDED 'AS IS'. THE MATERIALS MAY CONTAIN KNOWN AND UNKNOWN VIOLATIONS OR DEVIATIONS OF INDUSTRY STANDARDS AND SPECIFICATIONS. NVIDIA MAKES NO WARRANTIES, EXPRESSED, IMPLIED, STATUTORY OR OTHERWISE WITH RESPECT TO THE MATERIALS OR OTHERWISE, AND EXPRESSLY DISCLAIMS ANY IMPLIED WARRANTIES INCLUDING, WITHOUT LIMITATION, THE WARRANTIES OF DESIGN, OF NONINFRINGEMENT, MERCHANTABILITY OR FITNESS FOR A PARTICULAR PURPOSE, OR ARISING FROM A COURSE OF DEALING, TRADE USAGE, TRADE PRACTICE, OR INDUSTRY STANDARDS.

GIGABYTE

Title	MEMORY: FBE Partition 63..32	
Size: Custom	Document Number: GV-N3080AORUSX W-10GD	Rev: 1.0
Date: Wednesday, September 30, 2020	Sheet 16 of 79	

MEMORY: FBF Partition 31..0

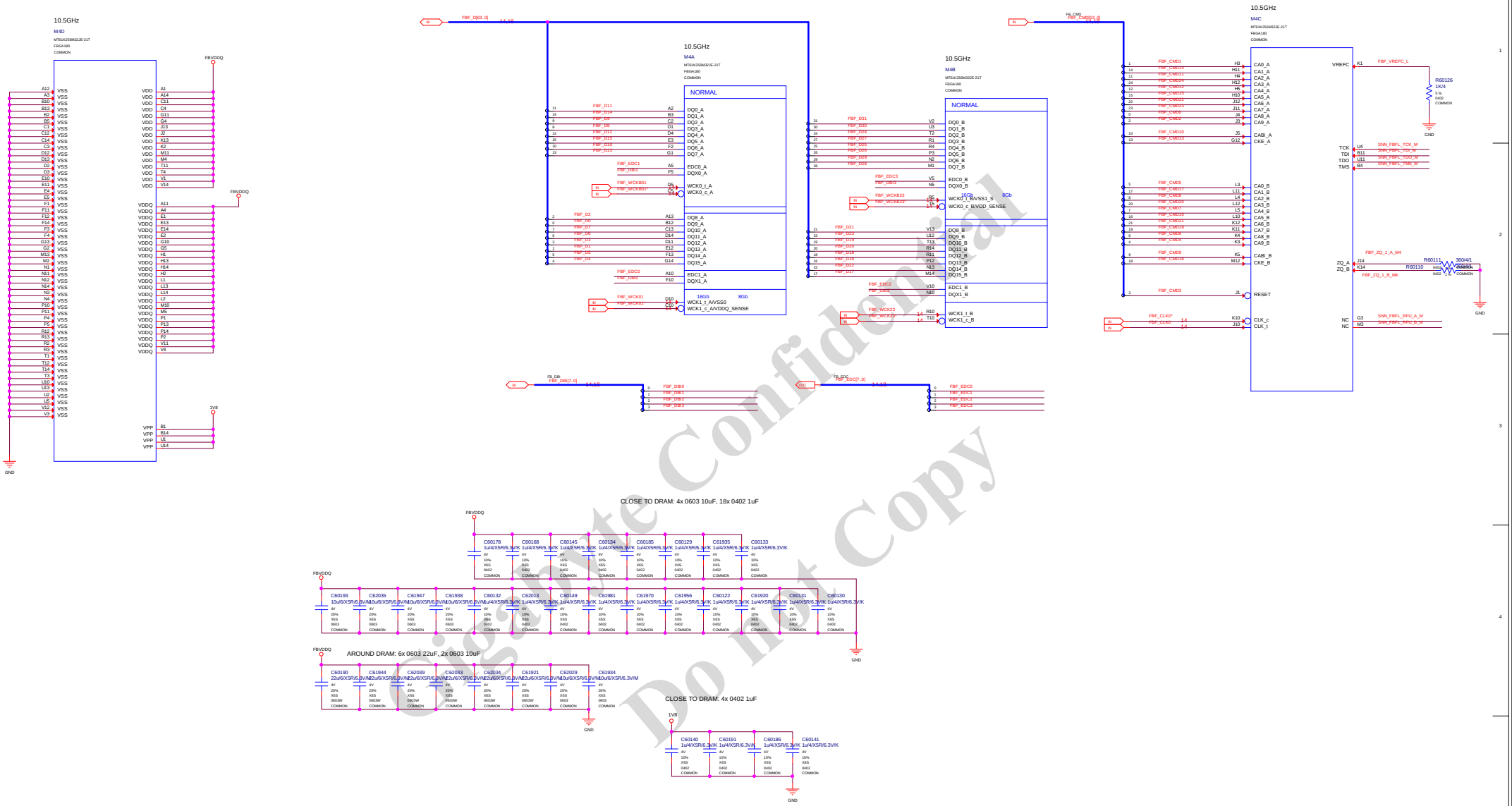

Gigabyte Confidential
Do not Copy

ASSEMBLY	<ASSEMBLY_DESCRIPTION>
PAGE DETAIL	MEMORY: FBF PARTITION[31:0]

ALL NVIDIA DESIGN SPECIFICATIONS, REFERENCE SPECIFICATIONS, REFERENCE BOARDS, FILES, DRAWINGS, DIAGNOSTICS, LISTS AND OTHER DOCUMENTS OR INFORMATION (TOGETHER AND SEPARATELY, 'MATERIALS') ARE BEING PROVIDED 'AS IS'. THE MATERIALS MAY CONTAIN KNOWN AND UNKNOWN VIOLATIONS OR DEVIATIONS OF INDUSTRY STANDARDS AND SPECIFICATIONS. NVIDIA MAKES NO WARRANTIES, EXPRESSED, IMPLIED, STATUTORY OR OTHERWISE WITH RESPECT TO THE MATERIALS OR OTHERWISE, AND EXPRESSLY DISCLAIMS ANY IMPLIED WARRANTIES INCLUDING, WITHOUT LIMITATION, THE WARRANTIES OF DESIGN, OF NONINFRINGEMENT, MERCHANTABILITY OR FITNESS FOR A PARTICULAR PURPOSE, OR ARISING FROM A COURSE OF DEALING, TRADE USAGE, TRADE PRACTICE, OR INDUSTRY STANDARDS.

GIGABYTE

Title	MEMORY: FBF Partition 31..0	
Size: Custom	Document Number: GV-N3080AORUSX W-10GD	Rev: 1.0
Date: Wednesday, September 30, 2020	Sheet 17 of 79	

MEMORY: FBF Partition 63..32

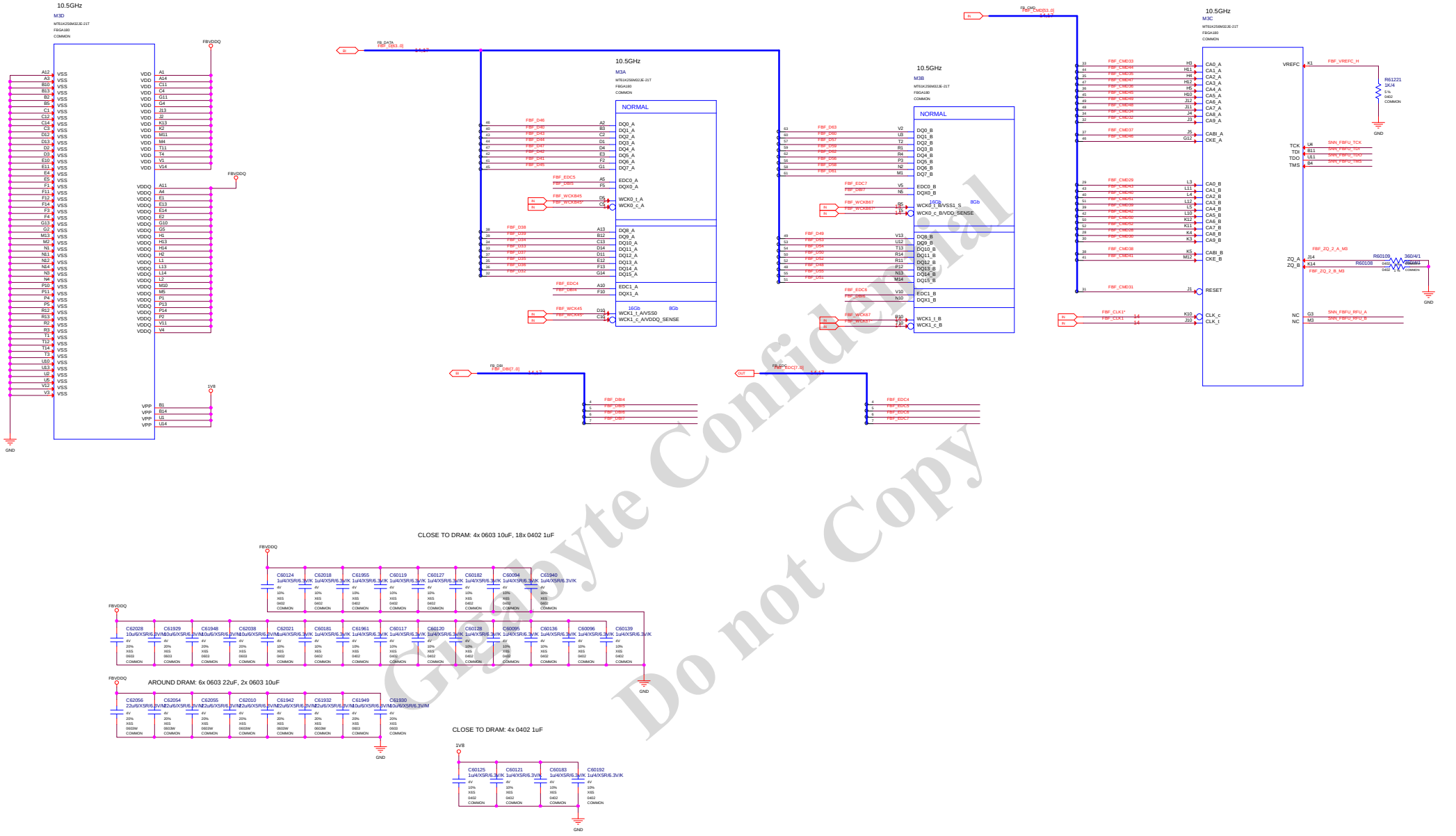

Gigabyte Confidential
Do not Copy

ASSEMBLY	<ASSEMBLY_DESCRIPTION>
PAGE DETAIL	MEMORY: FBF PARTITION[63:32]

ALL NVIDIA DESIGN SPECIFICATIONS, REFERENCE SPECIFICATIONS, REFERENCE BOARDS, FILES, DRAWINGS, DIAGNOSTICS, LISTS AND OTHER DOCUMENTS OR INFORMATION (TOGETHER AND SEPARATELY, 'MATERIALS') ARE BEING PROVIDED 'AS IS'. THE MATERIALS MAY CONTAIN KNOWN AND UNKNOWN VIOLATIONS OR DEVIATIONS OF INDUSTRY STANDARDS AND SPECIFICATIONS. NVIDIA MAKES NO WARRANTIES, EXPRESSED, IMPLIED, STATUTORY OR OTHERWISE WITH RESPECT TO THE MATERIALS OR OTHERWISE, AND EXPRESSLY DISCLAIMS ANY IMPLIED WARRANTIES INCLUDING, WITHOUT LIMITATION, THE WARRANTIES OF DESIGN, OF NONINFRINGEMENT, MERCHANTABILITY OR FITNESS FOR A PARTICULAR PURPOSE, OR ARISING FROM A COURSE OF DEALING, TRADE USAGE, TRADE PRACTICE, OR INDUSTRY STANDARDS.

GIGABYTE

Title	MEMORY: FBF Partition 63..32	
Size: Custom	Document Number: GV-N3080AORUSX W-10GD	Rev: 1.0
Date: Wednesday, September 30, 2020	Sheet 18 of 79	

GPU GND, RFUs & RSVD

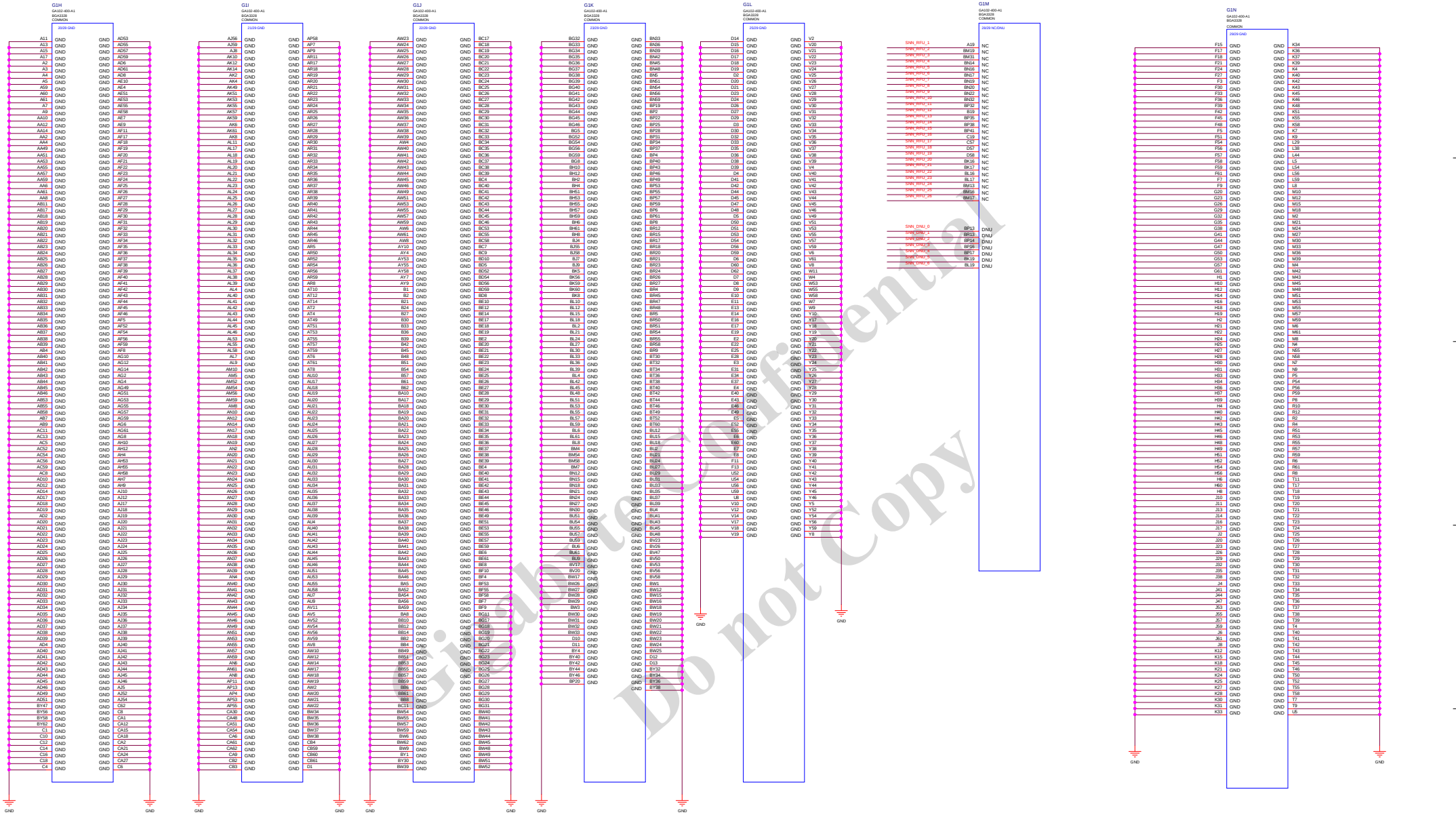

Gigabyte Confidential
Do not Copy

ASSEMBLY	<ASSEMBLY_DESCRIPTION>
PAGE DETAIL	GPU GND, RFUs & RSVD

ALL NVIDIA DESIGN SPECIFICATIONS, REFERENCE SPECIFICATIONS, REFERENCE BOARDS, FILES, DRAWINGS, DIAGNOSTICS, LISTS AND OTHER DOCUMENTS OR INFORMATION (TOGETHER AND SEPARATELY, 'MATERIALS') ARE BEING PROVIDED 'AS IS'. THE MATERIALS MAY CONTAIN KNOWN AND UNKNOWN VIOLATIONS OR DEVIATIONS OF INDUSTRY STANDARDS AND SPECIFICATIONS. NVIDIA MAKES NO WARRANTIES, EXPRESSED, IMPLIED, STATUTORY OR OTHERWISE WITH RESPECT TO THE MATERIALS OR OTHERWISE, AND EXPRESSLY DISCLAIMS ALL IMPLIED WARRANTIES INCLUDING, WITHOUT LIMITATION, THE WARRANTIES OF DESIGN, OF NONINFRINGEMENT, MERCHANTABILITY OR FITNESS FOR A PARTICULAR PURPOSE, OR ARISING FROM A COURSE OF DEALING, TRADE USAGE, TRADE PRACTICE, OR INDUSTRY STANDARDS.

GIGABYTE

Title	GPU GND, RFUs & RSVD	
Size: Custom	Document Number: GV-N3080AORUSX W-10GD	Rev: 1.0
Date: Wednesday, September 30, 2020	Sheet 19 of 79	

GPU PWR and GND

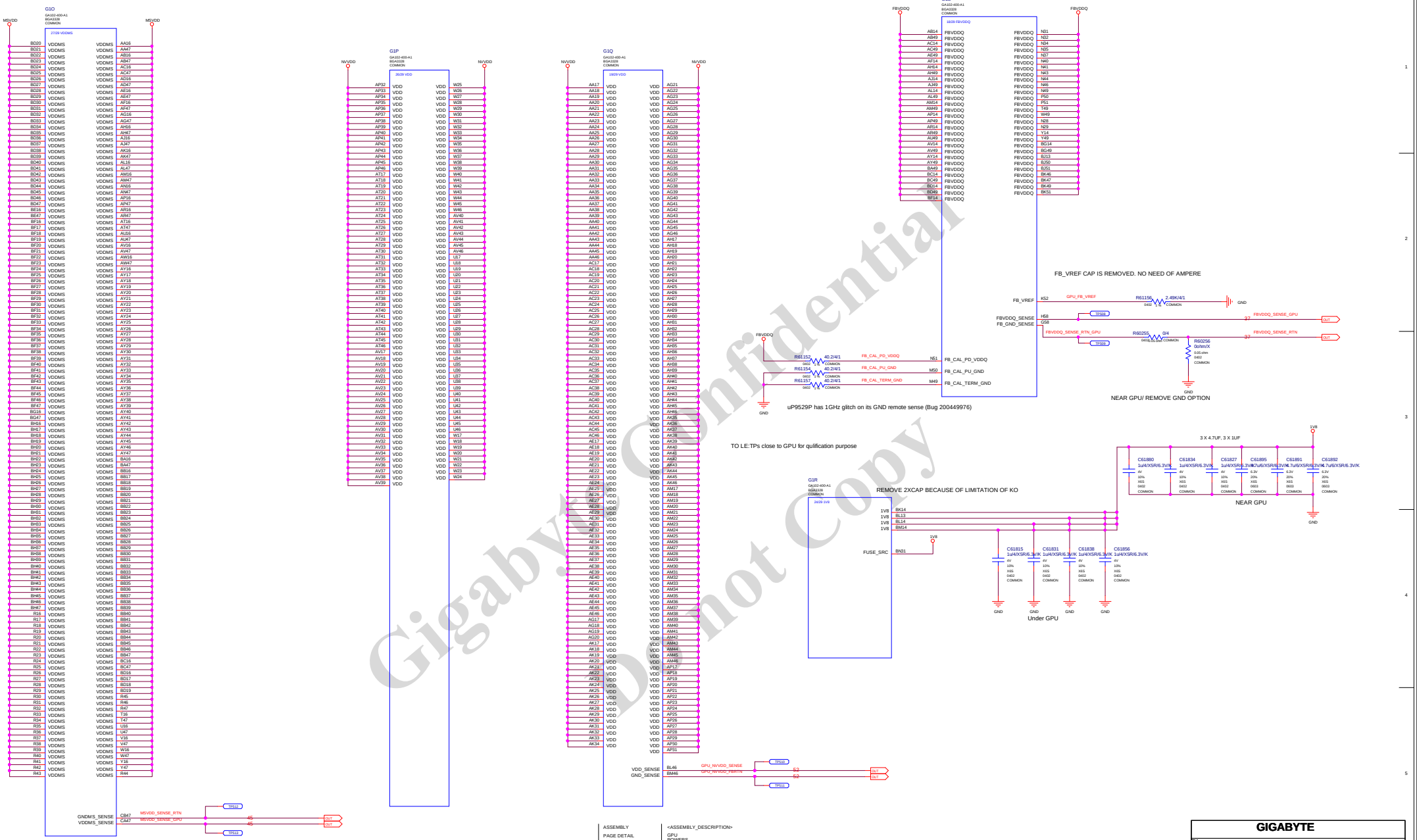

Gigabyte Confidential
Do not Copy

ALL NVIDIA DESIGN SPECIFICATIONS, REFERENCE SPECIFICATIONS, REFERENCE BOARDS, FILES, DRAWINGS, DIAGNOSTICS, LISTS AND OTHER DOCUMENTS OR INFORMATION (TOGETHER AND SEPARATELY, 'MATERIALS') ARE BEING PROVIDED 'AS IS'. THE MATERIALS MAY CONTAIN KNOWN AND UNKNOWN VIOLATIONS OR DEVIATIONS OF INDUSTRY STANDARDS AND SPECIFICATIONS. NVIDIA MAKES NO WARRANTIES, EXPRESSED, IMPLIED, STATUTORY OR OTHERWISE WITH RESPECT TO THE MATERIALS OR OTHERWISE, AND EXPRESSLY DISCLAIMS ANY IMPLIED WARRANTIES INCLUDING, WITHOUT LIMITATION, THE WARRANTIES OF DESIGN, OF NONINFRINGEMENT, MERCHANTABILITY OR FITNESS FOR A PARTICULAR PURPOSE, OR ARISING FROM A COURSE OF DEALING, TRADE USAGE, TRADE PRACTICE, OR INDUSTRY STANDARDS.

ASSEMBLY	<ASSEMBLY_DESCRIPTION>
PAGE DETAIL	GPU POWERS

GIGABYTE

Title	GPU PWR and GND	
Size: Custom	Document Number: GV-N3080AORUSX W-10GD	Rev: 1.0
Date: Wednesday, September 30, 2020	Sheet 20 of 79	

NVVDD

UNDER GPU

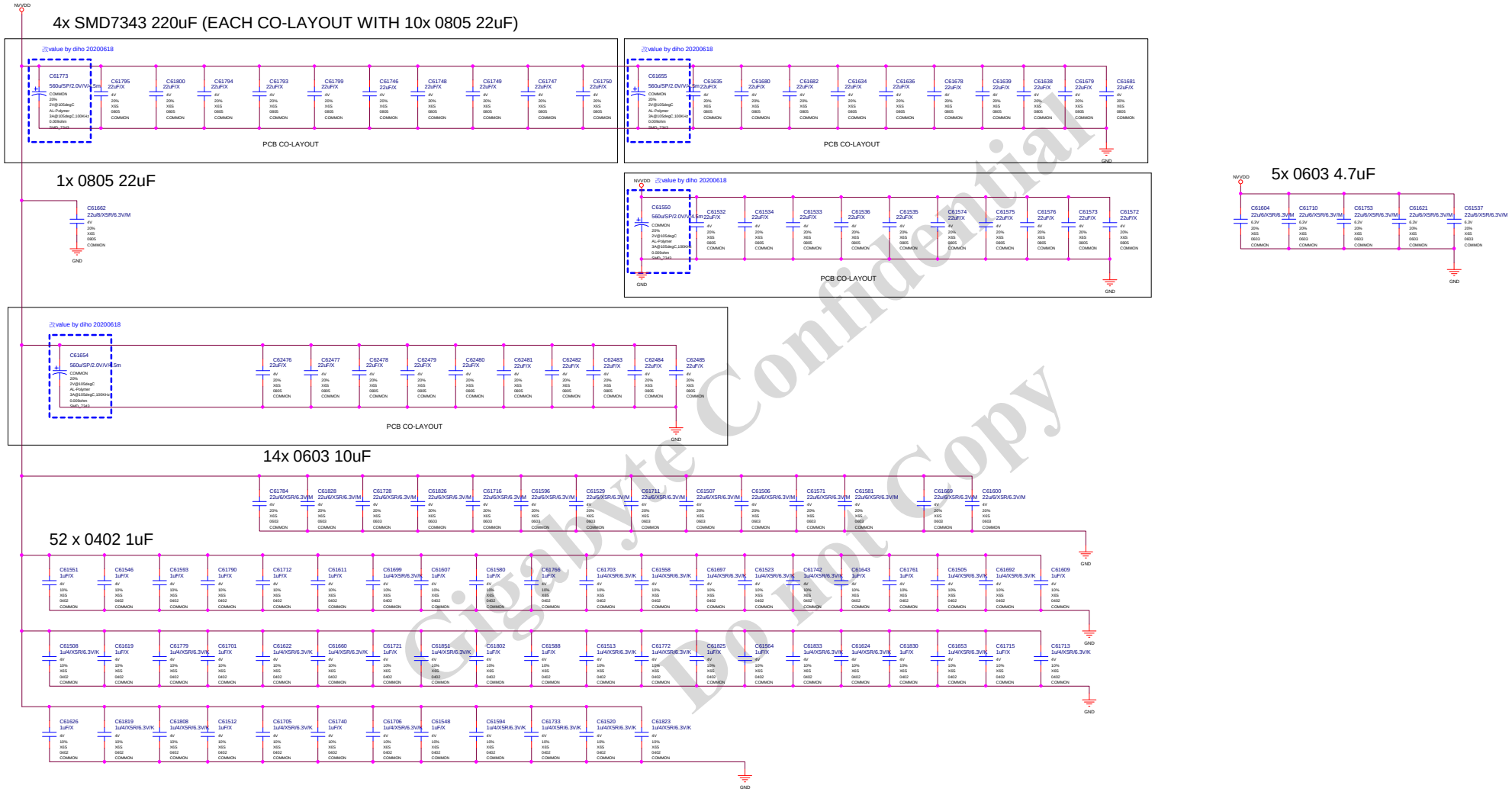

Gigabyte Confidential
Do not Copy

ALL NVIDIA DESIGN SPECIFICATIONS, REFERENCE SPECIFICATIONS, REFERENCE BOARDS, FILES, DRAWINGS, DIAGNOSTICS, LISTS AND OTHER DOCUMENTS OR INFORMATION (TOGETHER AND SEPARATELY, 'MATERIALS') ARE BEING PROVIDED 'AS IS'. THE MATERIALS MAY CONTAIN KNOWN AND UNKNOWN VIOLATIONS OR DEVIATIONS OF INDUSTRY STANDARDS AND SPECIFICATIONS. NVIDIA MAKES NO WARRANTIES, EXPRESSED, IMPLIED, STATUTORY OR OTHERWISE WITH RESPECT TO THE MATERIALS OR OTHERWISE, AND EXPRESSLY DISCLAIMS ALL IMPLIED WARRANTIES INCLUDING, WITHOUT LIMITATION, THE WARRANTIES OF DESIGN, OF NONINFRINGEMENT, MERCHANTABILITY OR FITNESS FOR A PARTICULAR PURPOSE, OR ARISING FROM A COURSE OF DEALING, TRADE USAGE, TRADE PRACTICE, OR INDUSTRY STANDARDS.

ASSEMBLY <ASSEMBLY_DESCRIPTION>
PAGE DETAIL GPU DECOUPLING NVVDD

GIGABYTE		
Title: Page 21: GPU: NVVDD DECOUPLING		
Size: Custom	Document Number: GV-N3080AORUSX W-10GD	Rev: 1.0
Date: Wednesday, September 30, 2020	Sheet 21 of 79	

FBVDDQ

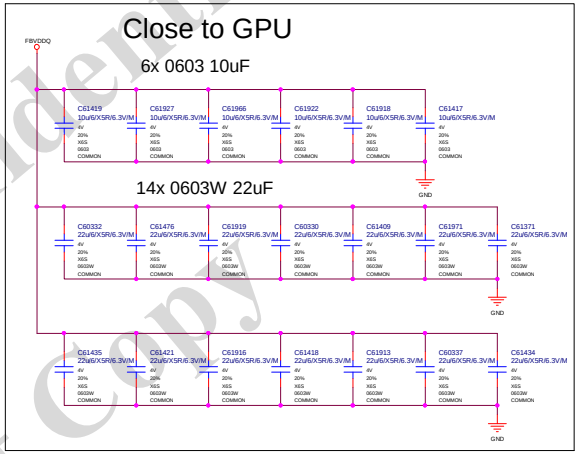

Gigabyte Confidential
Do not Copy

ASSEMBLY <ASSEMBLY_DESCRIPTION>
PAGE DETAIL GPU DECOUPLING FBVDDQ

ALL NVIDIA DESIGN SPECIFICATIONS, REFERENCE SPECIFICATIONS, REFERENCE BOARDS, FILES, DRAWINGS, DIAGNOSTICS, LISTS AND OTHER DOCUMENTS OR INFORMATION (TOGETHER AND SEPARATELY, 'MATERIALS') ARE BEING PROVIDED 'AS IS'. THE MATERIALS MAY CONTAIN KNOWN AND UNKNOWN VIOLATIONS OR DEVIATIONS OF INDUSTRY STANDARDS AND SPECIFICATIONS. NVIDIA MAKES NO WARRANTIES, EXPRESSED, IMPLIED, STATUTORY OR OTHERWISE WITH RESPECT TO THE MATERIALS OR OTHERWISE, AND EXPRESSLY DISCLAIMS ALL IMPLIED WARRANTIES INCLUDING, WITHOUT LIMITATION, THE WARRANTIES OF DESIGN, OF NONINFRINGEMENT, MERCHANTABILITY OR FITNESS FOR A PARTICULAR PURPOSE, OR ARISING FROM A COURSE OF DEALING, TRADE USAGE, TRADE PRACTICE, OR INDUSTRY STANDARDS.

GIGABYTE		
Title: Page 22: GPU: FBVDD DECOUPLING		
Size: Custom	Document Number: GV-N3080AORUSX W-10GD	Rev: 1.0
Date: Wednesday, September 30, 2020	Sheet 22 of 79	

Page 23: GPU: MSVDD DECOUPLING

MSVDD

UNDER GPU

14x 0603 10uF

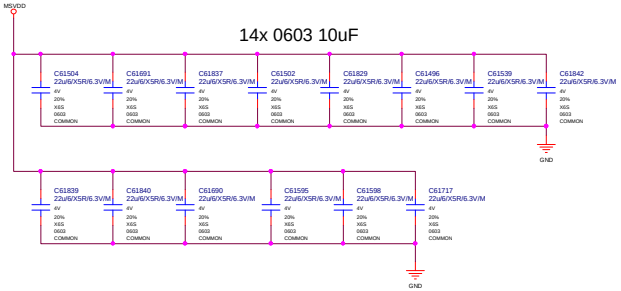

2x SMD7343 220uF (EACH CO-LAYOUT WITH 10x 22uF 0805)

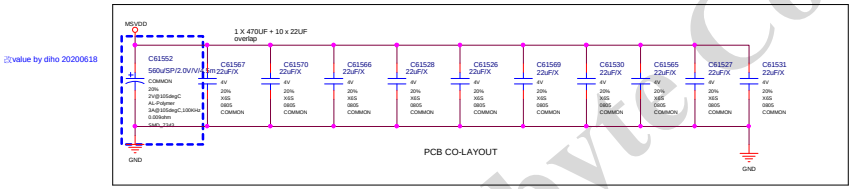

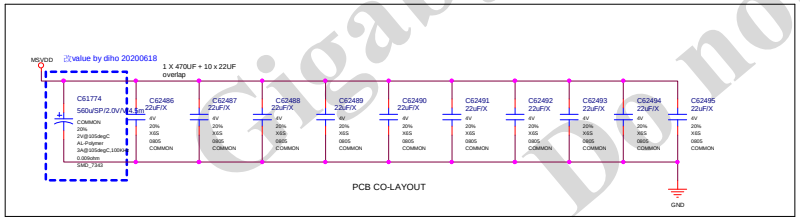

47x 0402 1uF

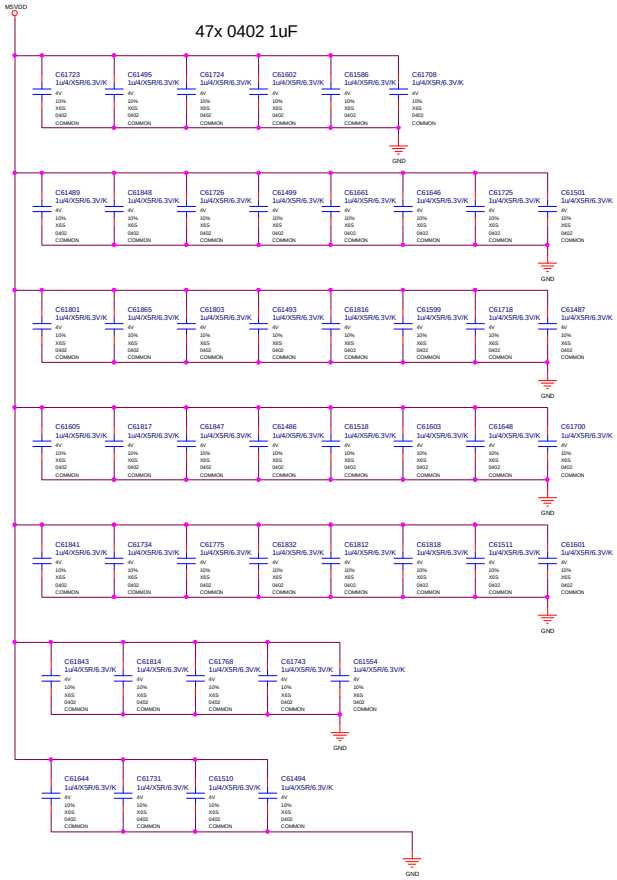

REMOVED 3X 1uF 0402 DUE TO SPACE RESTRICTION

Gigabyte Confidential
Do not Copy

ASSEMBLY	<ASSEMBLY_DESCRIPTION>
PAGE DETAIL	GPU DECOUPLING MSVDD

ALL NVIDIA DESIGN SPECIFICATIONS, REFERENCE SPECIFICATIONS, REFERENCE BOARDS, FILES, DRAWINGS, DIAGNOSTICS, LISTS AND OTHER DOCUMENTS OR INFORMATION (TOGETHER AND SEPARATELY, 'MATERIALS') ARE BEING PROVIDED 'AS IS'. THE MATERIALS MAY CONTAIN KNOWN AND UNKNOWN VIOLATIONS OR DEVIATIONS OF INDUSTRY STANDARDS AND SPECIFICATIONS. NVIDIA MAKES NO WARRANTIES, EXPRESSED, IMPLIED, STATUTORY OR OTHERWISE WITH RESPECT TO THE MATERIALS OR OTHERWISE, AND EXPRESSLY DISCLAIMS ALL IMPLIED WARRANTIES INCLUDING, WITHOUT LIMITATION, THE WARRANTIES OF DESIGN, OF NONINFRINGEMENT, MERCHANTABILITY OR FITNESS FOR A PARTICULAR PURPOSE, OR ARISING FROM A COURSE OF DEALING, TRADE USAGE, TRADE PRACTICE, OR INDUSTRY STANDARDS.

	GIGABYTE
Title	Page 23: GPU: MSVDD DECOUPLING
Size	Custom
Document Number	GV-N3080AORUSX W-10GD
Rev	1.0
Date:	Wednesday, September 30, 2020
Sheet	23 of 79

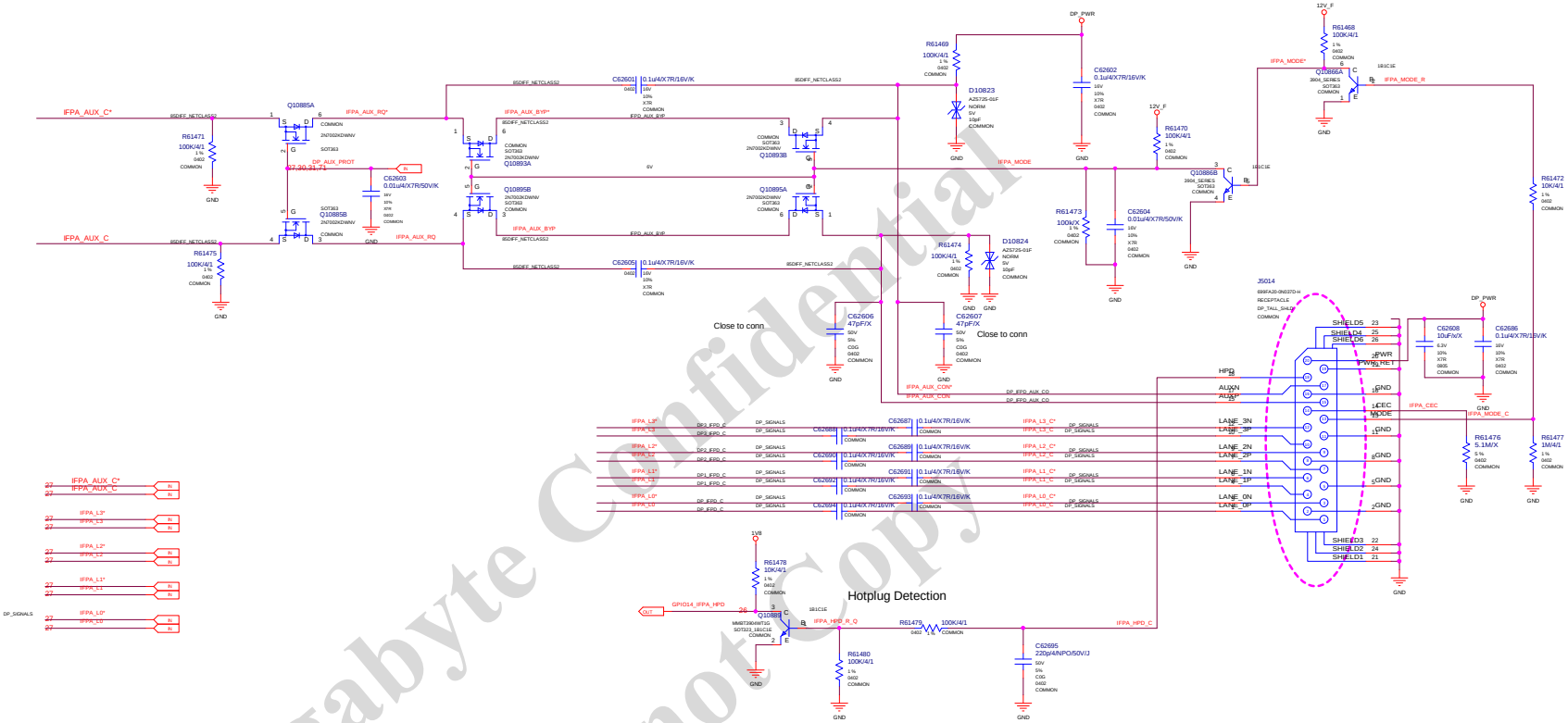

Gigabyte Confidential
Do not Copy

ASSEMBLY	<ASSEMBLY_DESCRIPTION>		
PAGE DETAIL	BLANK		

ALL NVIDIA DESIGN SPECIFICATIONS, REFERENCE SPECIFICATIONS, REFERENCE BOARDS, FILES, DRAWINGS, DIAGNOSTICS, LISTS AND OTHER DOCUMENTS OR INFORMATION (TOGETHER AND SEPARATELY, 'MATERIALS') ARE BEING PROVIDED 'AS IS'. THE MATERIALS CONTAIN KNOWN AND UNKNOWN VIOLATIONS OR DEVIATIONS OF INDUSTRY STANDARDS AND SPECIFICATIONS. NVIDIA MAKES NO WARRANTIES, EXPRESSED, IMPLIED, STATUTORY OR OTHERWISE WITH RESPECT TO THE MATERIALS OR OTHERWISE, AND EXPRESSLY DISCLAIMS ALL IMPLIED WARRANTIES INCLUDING, WITHOUT LIMITATION, THE WARRANTIES OF DESIGN, OF NONINFRINGEMENT, MERCHANTABILITY OR FITNESS FOR A PARTICULAR PURPOSE, OR ARISING FROM A COURSE OF DEALING, TRADE USAGE, TRADE PRACTICE, OR INDUSTRY STANDARDS.

GIGABYTE

Title	Page 24 blank	
Size: Custom	Document Number: GV-N3080AORUSX W-10GD	Rev: 1.0
Date: Wednesday, September 30, 2020	Sheet 24 of 79	

NVHS Interface and FRAME LOCK

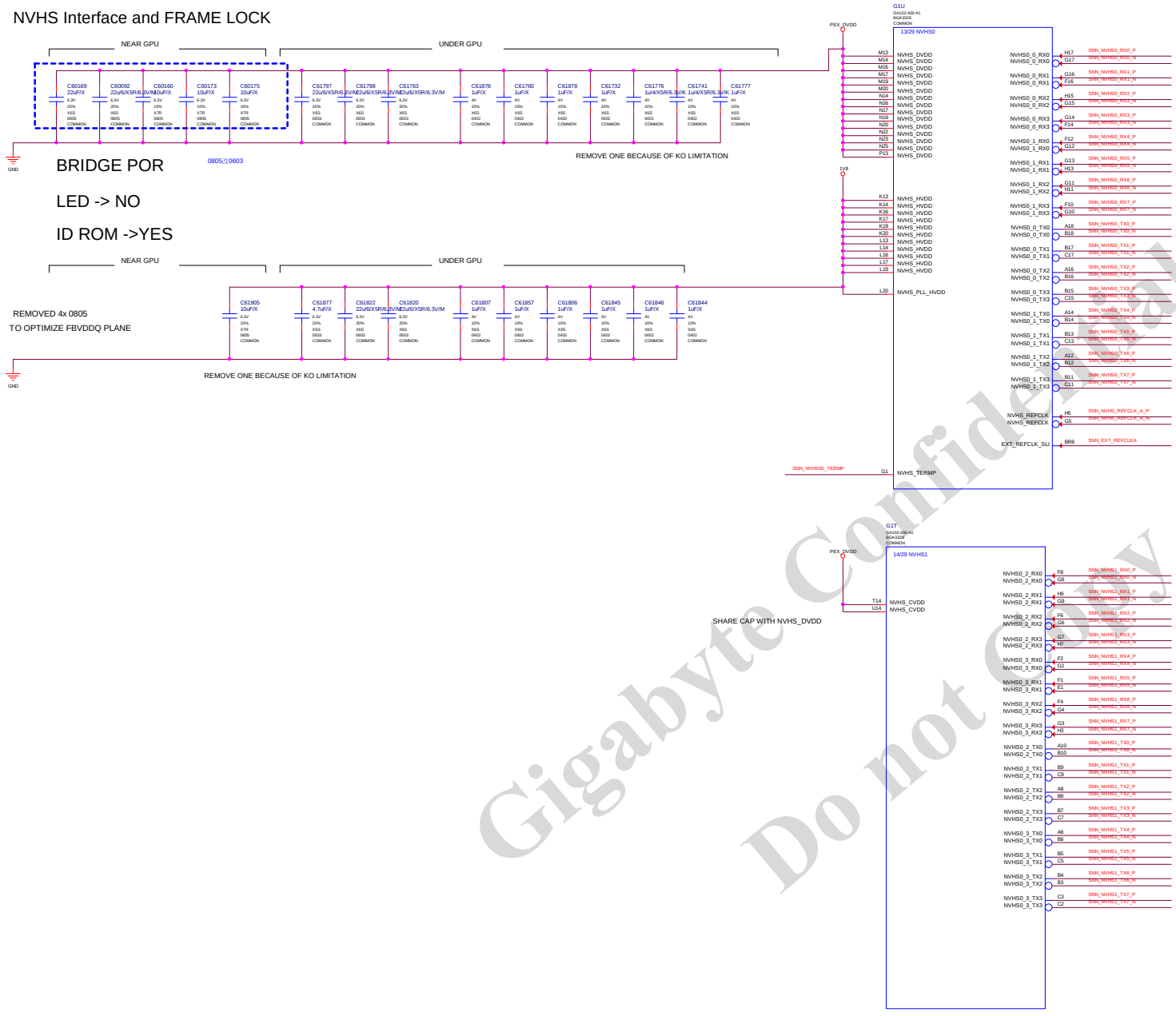

Gigabyte Confidential
Do not Copy

ASSEMBLY <ASSEMBLY_DESCRIPTION>
PAGE DETAIL NVHS x16

ALL NVIDIA DESIGN SPECIFICATIONS, REFERENCE SPECIFICATIONS, REFERENCE BOARDS, FILES, DRAWINGS, DIAGNOSTICS, LISTS AND OTHER DOCUMENTS OR INFORMATION (TOGETHER AND SEPARATELY, 'MATERIALS') ARE BEING PROVIDED 'AS IS'. THE MATERIALS MAY CONTAIN KNOWN AND UNKNOWN VIOLATIONS OR DEVIATIONS OF INDUSTRY STANDARDS AND SPECIFICATIONS. NVIDIA MAKES NO WARRANTIES, EXPRESSED, IMPLIED, STATUTORY OR OTHERWISE WITH RESPECT TO THE MATERIALS OR OTHERWISE, AND EXPRESSLY DISCLAIMS ALL IMPLIED WARRANTIES INCLUDING, WITHOUT LIMITATION, THE WARRANTIES OF DESIGN, OF NONINFRINGEMENT, MERCHANTABILITY OR FITNESS FOR A PARTICULAR PURPOSE, OR ARISING FROM A COURSE OF DEALING, TRADE USAGE, TRADE PRACTICE, OR INDUSTRY STANDARDS.

GIGABYTE

Title: NVHS Interface and FRAME LOCK

Size: Custom | Document Number: GV-N3080AORUSX W-10GD | Rev: 1.0

Date: Wednesday, September 30, 2020 | Sheet 25 of 79

MISC1: Fan, Thermal, JTAG, GPIO, STEREO

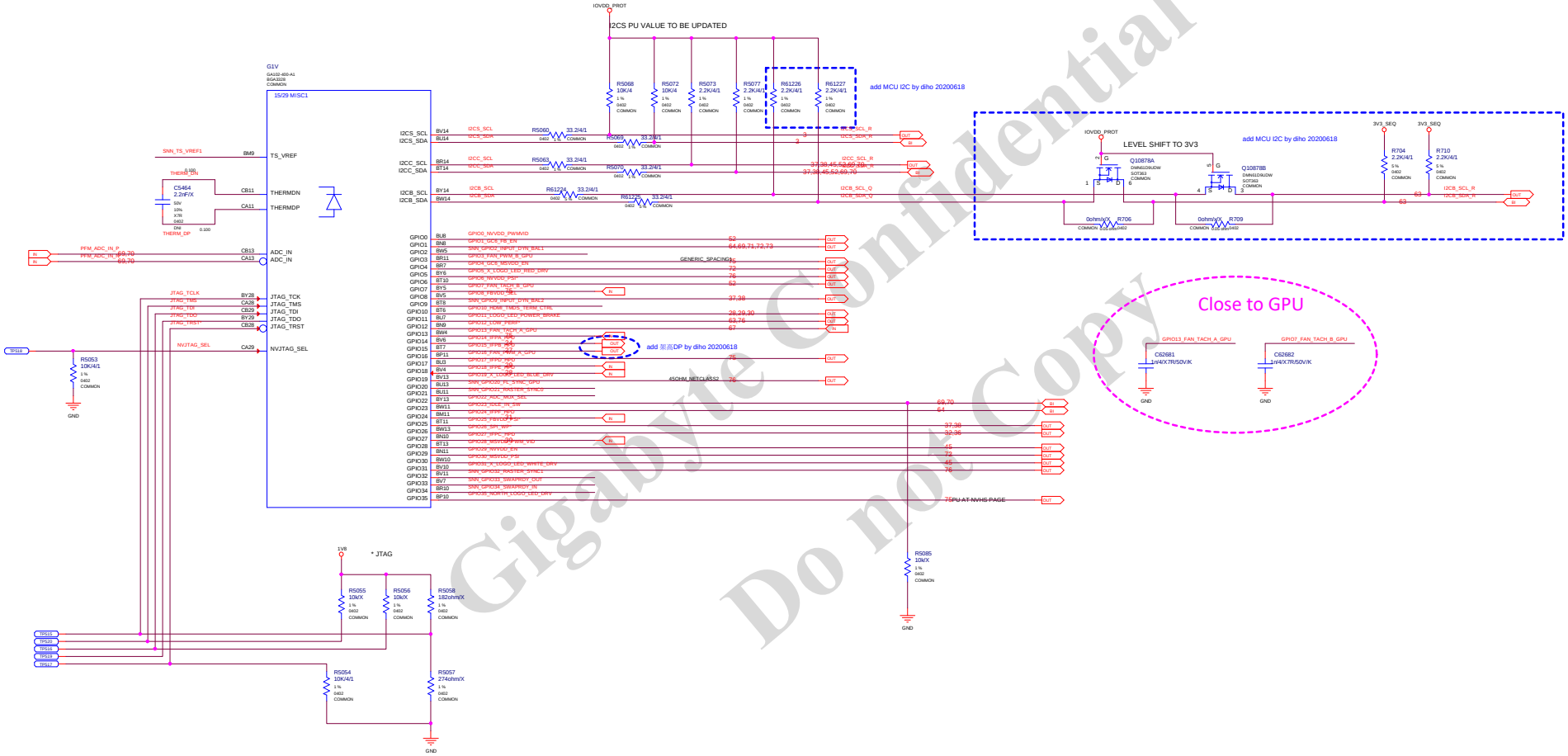

Gigabyte Confidential
Do not Copy

ASSEMBLY | <ASSEMBLY_DESCRIPTION>
PAGE DETAIL | MISC: THERMAL, JTAG, GPIO

ALL NVIDIA DESIGN SPECIFICATIONS, REFERENCE SPECIFICATIONS, REFERENCE BOARDS, FILES, DRAWINGS, DIAGNOSTICS, LISTS AND OTHER DOCUMENTS OR INFORMATION (TOGETHER AND SEPARATELY, 'MATERIALS') ARE BEING PROVIDED 'AS IS'. THE MATERIALS MAY CONTAIN KNOWN AND UNKNOWN VIOLATIONS OR DEVIATIONS OF INDUSTRY STANDARDS AND SPECIFICATIONS. NVIDIA MAKES NO WARRANTIES, EXPRESSED, IMPLIED, STATUTORY OR OTHERWISE WITH RESPECT TO THE MATERIALS OR OTHERWISE, AND EXPRESSLY DISCLAIMS ALL IMPLIED WARRANTIES INCLUDING, WITHOUT LIMITATION, THE WARRANTIES OF DESIGN, OF NONINFRINGEMENT, MERCHANTABILITY OR FITNESS FOR A PARTICULAR PURPOSE, OR ARISING FROM A COURSE OF DEALING, TRADE USAGE, TRADE PRACTICE, OR INDUSTRY STANDARDS.

GIGABYTE

Title: MISC1: Fan, Thermal, JTAG, GPIO, STEREO

Size	Document Number	Rev
Custom	GV-N3080AORUSX W-10GD	1.0

Date: Wednesday, September 30, 2020 | Sheet 28 of 79

IFPA UNUSED, IFPB UNUSED

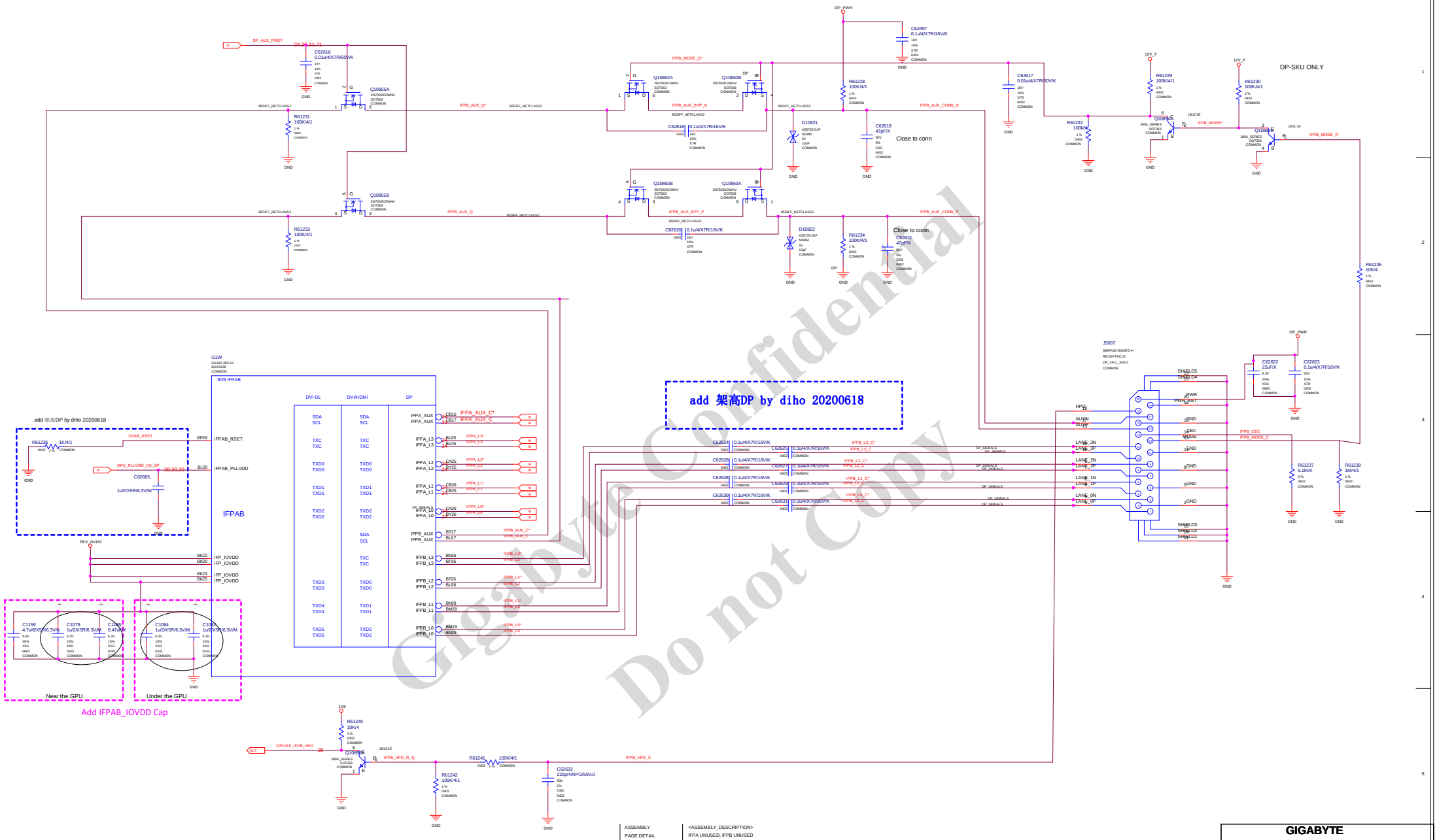

Gigabyte Confidential
Do not Copy

ASSEMBLY
PAGE DETAIL
<ASSEMBLY_DESCRIPTION>
IFPA UNUSED, IFPB UNUSED

ALL NVIDIA DESIGN SPECIFICATIONS, REFERENCE SPECIFICATIONS, REFERENCE BOARDS, FILES, DRAWINGS, DIAGNOSTICS, LISTS AND OTHER DOCUMENTS OR INFORMATION (TOGETHER AND SEPARATELY, 'MATERIALS') ARE BEING PROVIDED 'AS IS'. THE MATERIALS MAY CONTAIN KNOWN AND UNKNOWN VIOLATIONS OR DEVIATIONS OF INDUSTRY STANDARDS AND SPECIFICATIONS. NVIDIA MAKES NO WARRANTIES, EXPRESSED, IMPLIED, STATUTORY OR OTHERWISE WITH RESPECT TO THE MATERIALS OR OTHERWISE, AND EXPRESSLY DISCLAIMS ALL IMPLIED WARRANTIES INCLUDING, WITHOUT LIMITATION, THE WARRANTIES OF DESIGN, OF NONINFRINGEMENT, MERCHANTABILITY OR FITNESS FOR A PARTICULAR PURPOSE, OR ARISING FROM A COURSE OF DEALING, TRADE USAGE, TRADE PRACTICE, OR INDUSTRY STANDARDS.

Title	GIGABYTE
	IFPA RISE DP, IFPB UNUSED
Size	Custom
Document Number	GV-N3080AORUSX W-10GD
Rev	1.0
Date:	Wednesday, September 30, 2020
Sheet	27 of 79

IFPE DP

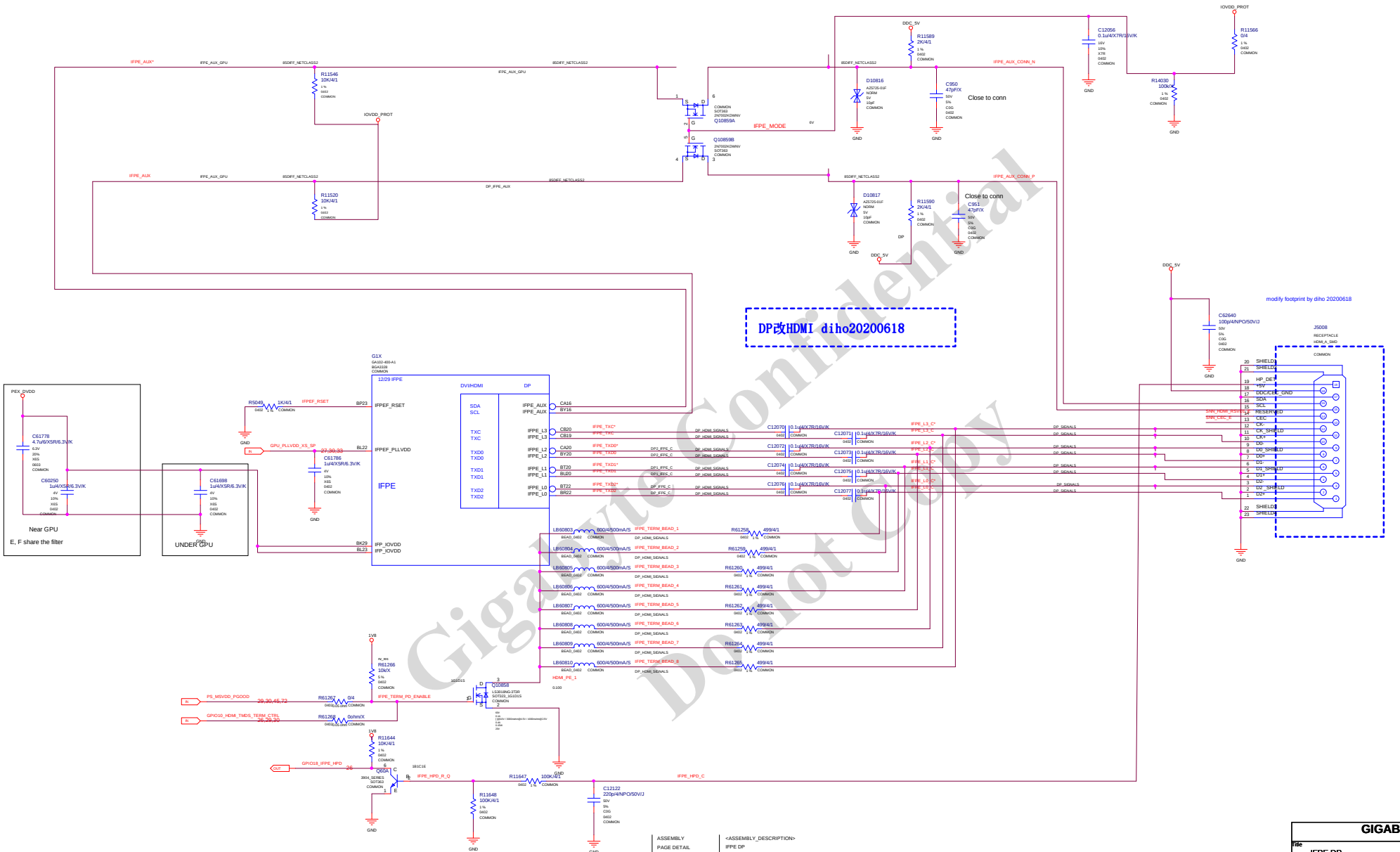

Gigabyte Confidential
Do not Copy

ASSEMBLY	<ASSEMBLY_DESCRIPTION>
PAGE DETAIL	IFPE DP

ALL NVIDIA DESIGN SPECIFICATIONS, REFERENCE SPECIFICATIONS, REFERENCE BOARDS, FILES, DRAWINGS, DIAGNOSTICS, LISTS AND OTHER DOCUMENTS OR INFORMATION (TOGETHER AND SEPARATELY, 'MATERIALS') ARE BEING PROVIDED 'AS IS'. THE MATERIALS MAY CONTAIN KNOWN AND UNKNOWN VIOLATIONS OR DEVIATIONS OF INDUSTRY STANDARDS AND SPECIFICATIONS. NVIDIA MAKES NO WARRANTIES, EXPRESSED, IMPLIED, STATUTORY OR OTHERWISE WITH RESPECT TO THE MATERIALS OR OTHERWISE, AND EXPRESSLY DISCLAIMS ANY IMPLIED WARRANTIES INCLUDING, WITHOUT LIMITATION, THE WARRANTIES OF DESIGN, OF NONINFRINGEMENT, MERCHANTABILITY OR FITNESS FOR A PARTICULAR PURPOSE, OR ARISING FROM A COURSE OF DEALING, TRADE USAGE, TRADE PRACTICE, OR INDUSTRY STANDARDS.

GIGABYTE

Title	IFPE DP	
Size: Custom	Document Number: GV-N3080AORUSX W-10GD	Rev: 1.0
Date: Wednesday, September 30, 2020	Sheet 28 of 79	

IFPD DP

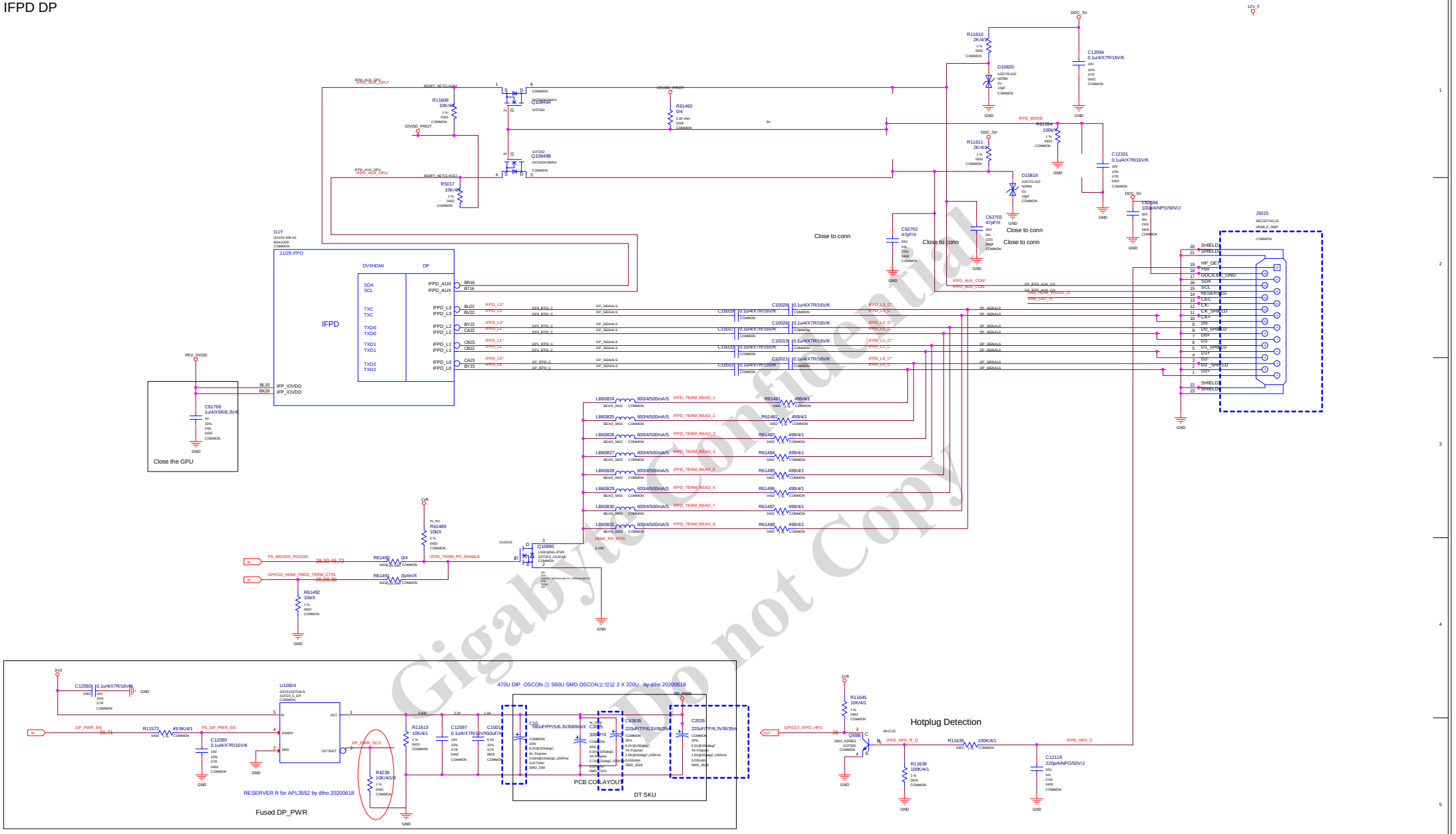

Gigabyte Confidential
Do not Copy

ASSEMBLY <ASSEMBLY_DESCRIPTION>
PAGE DETAIL IFPD DP

ALL NVIDIA DESIGN SPECIFICATIONS, REFERENCE SPECIFICATIONS, REFERENCE BOARDS, FILES, DRAWINGS, DIAGNOSTICS, LISTS AND OTHER DOCUMENTS OR INFORMATION (TOGETHER AND SEPARATELY, 'MATERIALS') ARE BEING PROVIDED 'AS IS'. THE MATERIALS MAY CONTAIN KNOWN AND UNKNOWN VIOLATIONS OR DEVIATIONS OF INDUSTRY STANDARDS AND SPECIFICATIONS. NVIDIA MAKES NO WARRANTIES, EXPRESSED, IMPLIED, STATUTORY OR OTHERWISE WITH RESPECT TO THE MATERIALS OR OTHERWISE, AND EXPRESSLY DISCLAIMS ANY IMPLIED WARRANTIES INCLUDING, WITHOUT LIMITATION, THE WARRANTIES OF DESIGN, OF NONINFRINGEMENT, MERCHANTABILITY OR FITNESS FOR A PARTICULAR PURPOSE, OR ARISING FROM A COURSE OF DEALING, TRADE USAGE, TRADE PRACTICE, OR INDUSTRY STANDARDS.

GIGABYTE

Title	IFPD DP		
Size	Document Number		Rev
Custom	GV-N3080AORUSX W-10GD		1.0
Date:	Wednesday, September 30, 2020	Sheet 29 of 79	

IFPC HDMI/DP

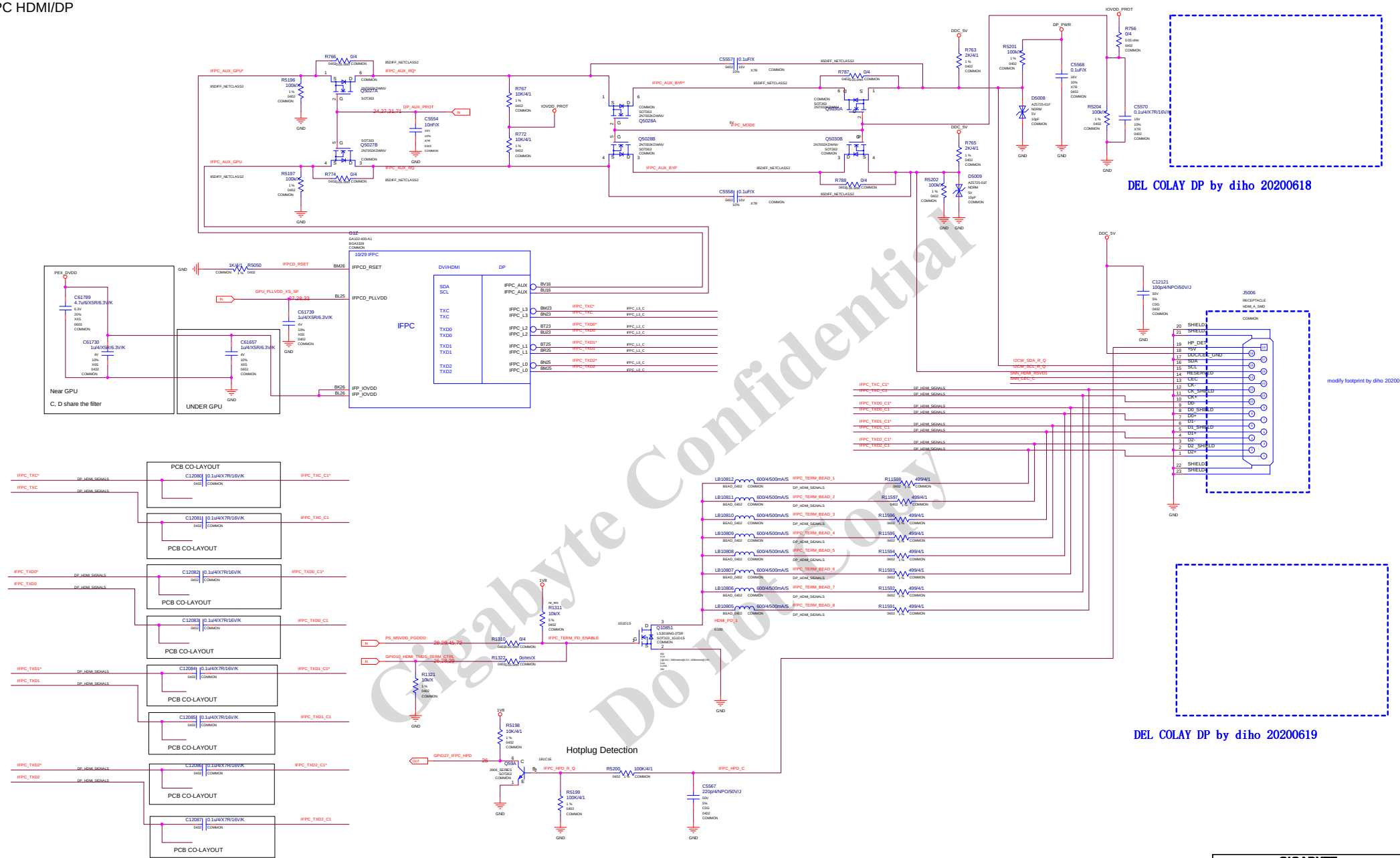

Gigabyte Confidential
Do not Copy

ALL NVIDIA DESIGN SPECIFICATIONS, REFERENCE SPECIFICATIONS, REFERENCE BOARDS, FILES, DRAWINGS, DIAGNOSTICS, LISTS AND OTHER DOCUMENTS OR INFORMATION (TOGETHER AND SEPARATELY, 'MATERIALS') ARE BEING PROVIDED 'AS IS'. THE MATERIALS MAY CONTAIN KNOWN AND UNKNOWN VIOLATIONS OR DEVIATIONS OF INDUSTRY STANDARDS AND SPECIFICATIONS. NVIDIA MAKES NO WARRANTIES, EXPRESSED, IMPLIED, STATUTORY OR OTHERWISE WITH RESPECT TO THE MATERIALS OR OTHERWISE, AND EXPRESSLY DISCLAIMS ALL IMPLIED WARRANTIES INCLUDING, WITHOUT LIMITATION, THE WARRANTIES OF DESIGN, OF NONINFRINGEMENT, MERCHANTABILITY OR FITNESS FOR A PARTICULAR PURPOSE, OR ARISING FROM A COURSE OF DEALING, TRADE USAGE, TRADE PRACTICE, OR INDUSTRY STANDARDS.

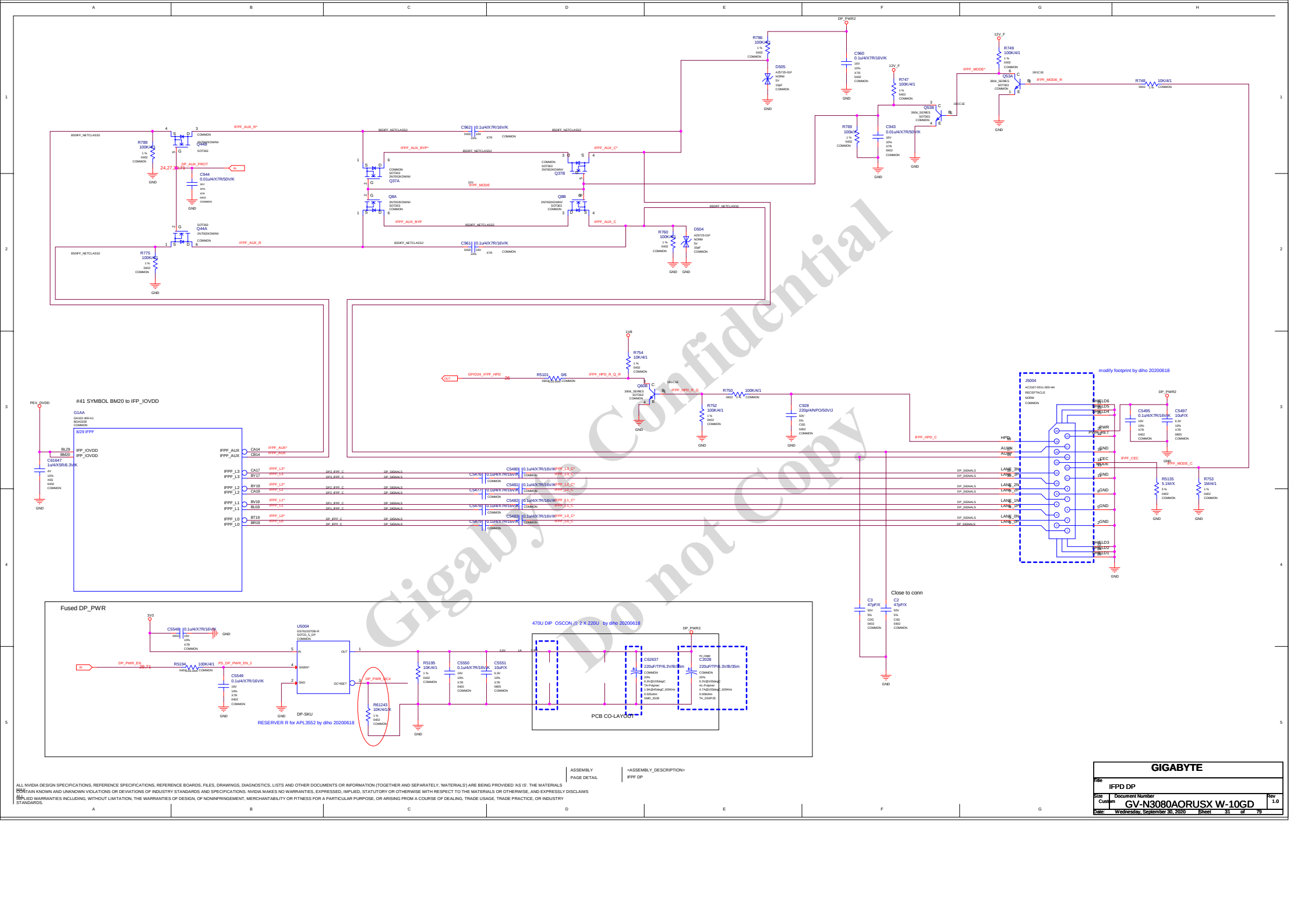

Gigabyte Confidential
Do not Copy

ASSEMBLY
PAGE DETAIL
<ASSEMBLY_DESCRIPTION>
IFPP DP

ALL NVIDIA DESIGN SPECIFICATIONS, REFERENCE SPECIFICATIONS, REFERENCE BOARDS, FILES, DRAWINGS, DIAGNOSTICS, LISTS AND OTHER DOCUMENTS OR INFORMATION (TOGETHER AND SEPARATELY, 'MATERIALS') ARE BEING PROVIDED 'AS IS'. THE MATERIALS MAY CONTAIN KNOWN AND UNKNOWN VIOLATIONS OR DEVIATIONS OF INDUSTRY STANDARDS AND SPECIFICATIONS. NVIDIA MAKES NO WARRANTIES, EXPRESSED, IMPLIED, STATUTORY OR OTHERWISE WITH RESPECT TO THE MATERIALS OR OTHERWISE, AND EXPRESSLY DISCLAIMS ALL IMPLIED WARRANTIES INCLUDING, WITHOUT LIMITATION, THE WARRANTIES OF DESIGN, OF NONINFRINGEMENT, MERCHANTABILITY OR FITNESS FOR A PARTICULAR PURPOSE, OR ARISING FROM A COURSE OF DEALING, TRADE USAGE, TRADE PRACTICE, OR INDUSTRY STANDARDS.

GIGABYTE

Title: IFPD DP

Size: Custom | Document Number: GV-N3080AORUSX W-10GD | Rev: 1.0

Date: Wednesday, September 30, 2020 | Sheet 31 of 79

MISC: ROM, Straps

H=High :Tied to 1.8V
M=Middle:Tied to 0.9V
L=Low :Tied to 0V

GROUP0

STRAP2	STRAP1	STRAP0	RAMCFG[4:0]		
L	L	L	00000	RAMCFG MICRON 8Gb G6X 19Gbps x16 (161-0430-900)	<-A01 PCB
H	L	L	00100	RAMCFG MICRON 8Gb G6X 19Gbps x8 (161-0430-900)	
H	L	H	00101	RAMCFG MICRON 8Gb G6X 21Gbps x8 (161-0431-900)	
L	L	M	01000	RAMCFG MICRON 8Gb G6X 20Gbps x16 (161-0424-900)	
L	L	H	00001	RAMCFG MICRON 8Gb G6X 21Gbps x16 (161-0431-900)	<-OLD
L	M	H	01010	RAMCFG MICRON 8Gb G6X 19Gbps x16 (161-0430-900)	<-LATEST A02 PCB

ROM_SO	ROM_SI	ROM_SCLK	SMARTFAN[2:0],FS_OVERT	1:ENABLE 0:DISABLE	
H	H	H	0111	FS_OVERT ENABLE	DEFAULT
L	L	L	0000	FS_OVERT DISABLE	

1:SMB_ALT_ADDR ENABLE
0:SMB_ALT_ADDR DISABLE

1:DEVID_SEL REBRAND
0:DEVID_SEL ORIGNAL

1:PCIE_CFG LOW POWER
0:PCIE_CFG HIGH POWER

1:VGA_DEVICE ENABLE
0:VGA_DEVICE DISABLE

STRAP5	STRAP4	STRAP3	SMB_ALT_ADDR	DEVID_SEL	PCIE_CFG	VGA_DEVICE	
M	H	H	1	1	1	1	
M	H	L	1	1	1	0	
M	L	H	1	1	0	1	
M	L	L	1	1	0	0	
L	H	M	1	0	1	1	
L	M	H	1	0	1	0	
L	M	L	1	0	0	1	
L	L	M	1	0	0	0	
H	H	H	0	1	1	1	
H	H	L	0	1	1	0	
H	L	H	0	1	0	1	
H	L	L	0	1	0	0	
L	H	H	0	0	1	1	
L	H	L	0	0	1	0	
L	L	H	0	0	0	1	Default
L	L	L	0	0	0	0	

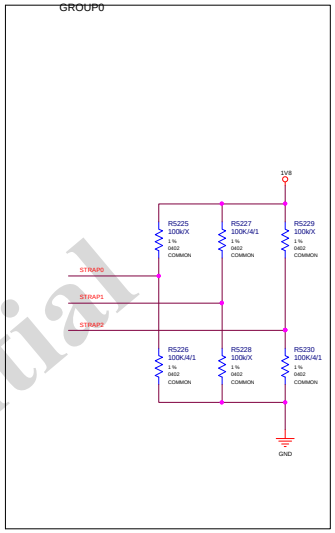

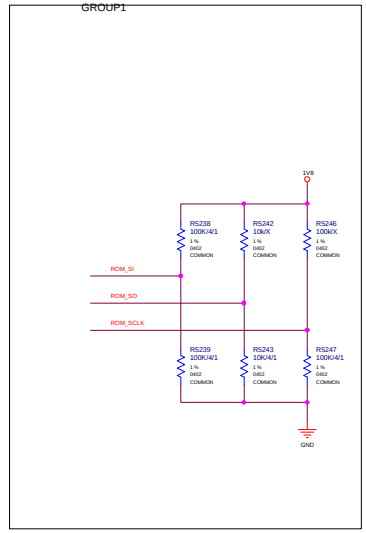

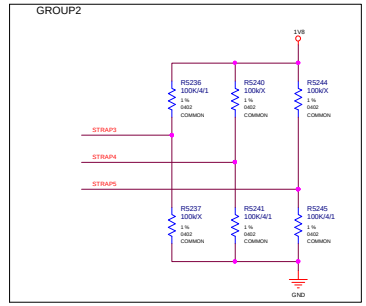

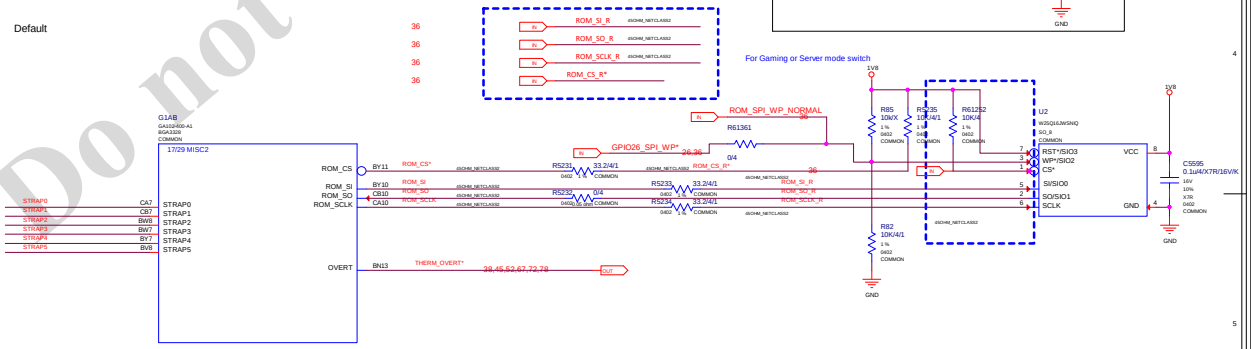

ALL NVIDIA DESIGN SPECIFICATIONS, REFERENCE SPECIFICATIONS, REFERENCE BOARDS, FILES, DRAWINGS, DIAGNOSTICS, LISTS AND OTHER DOCUMENTS OR INFORMATION (TOGETHER AND SEPARATELY, 'MATERIALS') ARE BEING PROVIDED 'AS IS'. THE MATERIALS CONTAIN KNOWN AND UNKNOWN VIOLATIONS OR DEVIATIONS OF INDUSTRY STANDARDS AND SPECIFICATIONS. NVIDIA MAKES NO WARRANTIES, EXPRESSED, IMPLIED, STATUTORY OR OTHERWISE WITH RESPECT TO THE MATERIALS OR OTHERWISE, AND EXPRESSLY DISCLAIMS IMPLIED WARRANTIES INCLUDING, WITHOUT LIMITATION, THE WARRANTIES OF DESIGN, OF NONINFRINGEMENT, MERCHANTABILITY OR FITNESS FOR A PARTICULAR PURPOSE, OR ARISING FROM A COURSE OF DEALING, TRADE USAGE, TRADE PRACTICE, OR INDUSTRY STANDARDS.

ASSEMBLY <ASSEMBLY_DESCRIPTION>
PAGE DETAIL MISC. ROM, STRAPS

GIGABYTE

Title: MISC: ROM, Straps

Size: Custom | Document Number: GV-N3080AORUSX W-10GD | Rev: 1.0

Date: Wednesday, September 30, 2020 | Sheet 32 of 79

Gigabyte Confidential
Do not Copy

MISC: XTAL. PLL

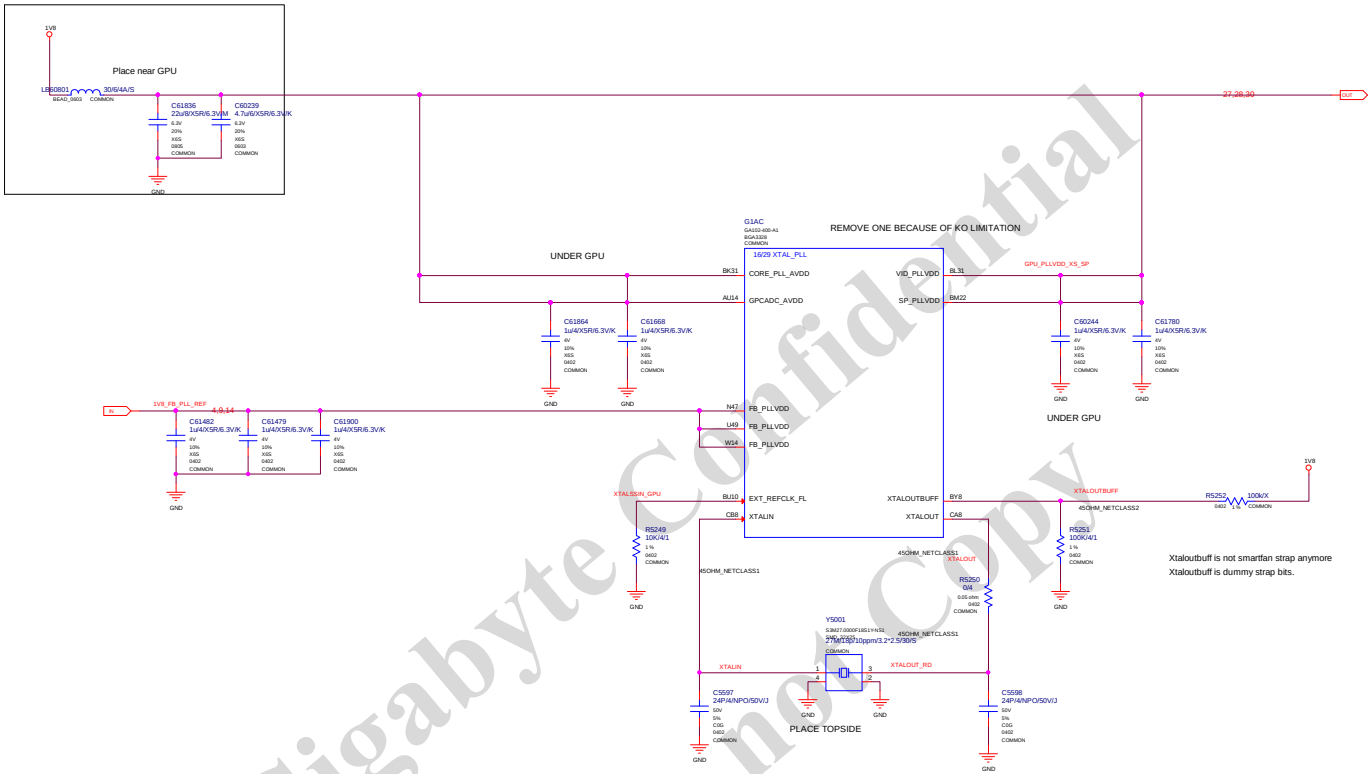

Gigabyte Confidential
Do not Copy

ASSEMBLY <ASSEMBLY_DESCRIPTION>
PAGE DETAIL MISC. XTAL. PLL

ALL NVIDIA DESIGN SPECIFICATIONS, REFERENCE SPECIFICATIONS, REFERENCE BOARDS, FILES, DRAWINGS, DIAGNOSTICS, LISTS AND OTHER DOCUMENTS OR INFORMATION (TOGETHER AND SEPARATELY, 'MATERIALS') ARE BEING PROVIDED 'AS IS'. THE MATERIALS MAY CONTAIN KNOWN AND UNKNOWN VIOLATIONS OR DEVIATIONS OF INDUSTRY STANDARDS AND SPECIFICATIONS. NVIDIA MAKES NO WARRANTIES, EXPRESSED, IMPLIED, STATUTORY OR OTHERWISE WITH RESPECT TO THE MATERIALS OR OTHERWISE, AND EXPRESSLY DISCLAIMS ALL IMPLIED WARRANTIES INCLUDING, WITHOUT LIMITATION, THE WARRANTIES OF DESIGN, OF NONINFRINGEMENT, MERCHANTABILITY OR FITNESS FOR A PARTICULAR PURPOSE, OR ARISING FROM A COURSE OF DEALING, TRADE USAGE, TRADE PRACTICE, OR INDUSTRY STANDARDS.

GIGABYTE			
Title: MISC: XTAL. PLL			
Size: Custom	Document Number: GV-N3080AORUSX W-10GD		Rev: 1.0
Date: Wednesday, September 30, 2020	Sheet 33 of 79		

PS: 5V, 5V_BACKUP

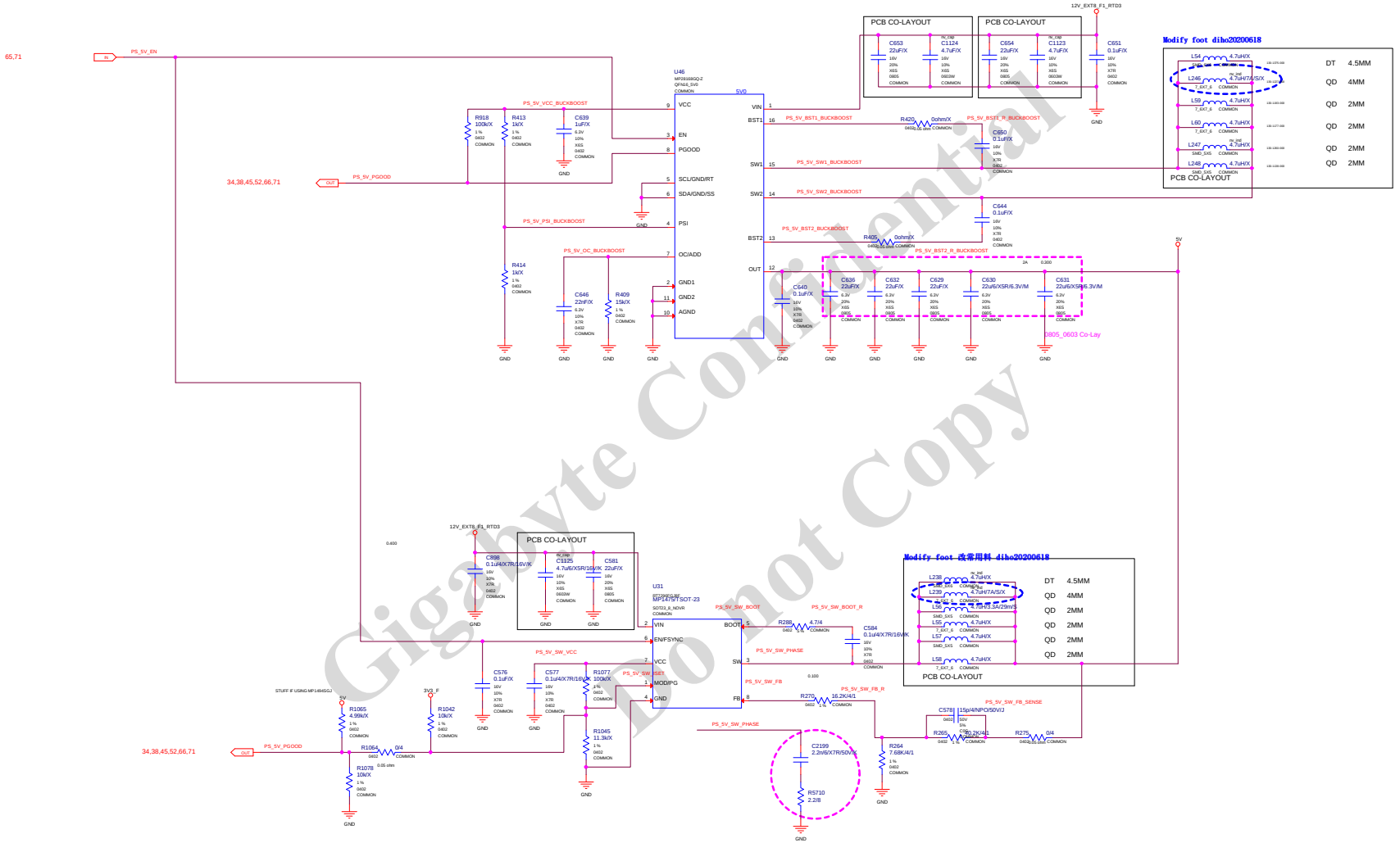

Gigabyte Confidential
Do not Copy

ASSEMBLY	<ASSEMBLY_DESCRIPTION>
PAGE DETAIL	PS: 5V

ALL NVIDIA DESIGN SPECIFICATIONS, REFERENCE SPECIFICATIONS, REFERENCE BOARDS, FILES, DRAWINGS, DIAGNOSTICS, LISTS AND OTHER DOCUMENTS OR INFORMATION (TOGETHER AND SEPARATELY, 'MATERIALS') ARE BEING PROVIDED 'AS IS'. THE MATERIALS MAY CONTAIN KNOWN AND UNKNOWN VIOLATIONS OR DEVIATIONS OF INDUSTRY STANDARDS AND SPECIFICATIONS. NVIDIA MAKES NO WARRANTIES, EXPRESSED, IMPLIED, STATUTORY OR OTHERWISE WITH RESPECT TO THE MATERIALS OR OTHERWISE, AND EXPRESSLY DISCLAIMS ANY IMPLIED WARRANTIES INCLUDING, WITHOUT LIMITATION, THE WARRANTIES OF DESIGN, OF NONINFRINGEMENT, MERCHANTABILITY OR FITNESS FOR A PARTICULAR PURPOSE, OR ARISING FROM A COURSE OF DEALING, TRADE USAGE, TRADE PRACTICE, OR INDUSTRY STANDARDS.

GIGABYTE

Title	PS: 5V, 5V_BACKUP	
Size: Custom	Document Number: GV-N3080AORUSX W-10GD	Rev: 1.0
Date: Wednesday, September 30, 2020	Sheet 34 of 79	

PS: PEX_DVDD 1V8 Rail

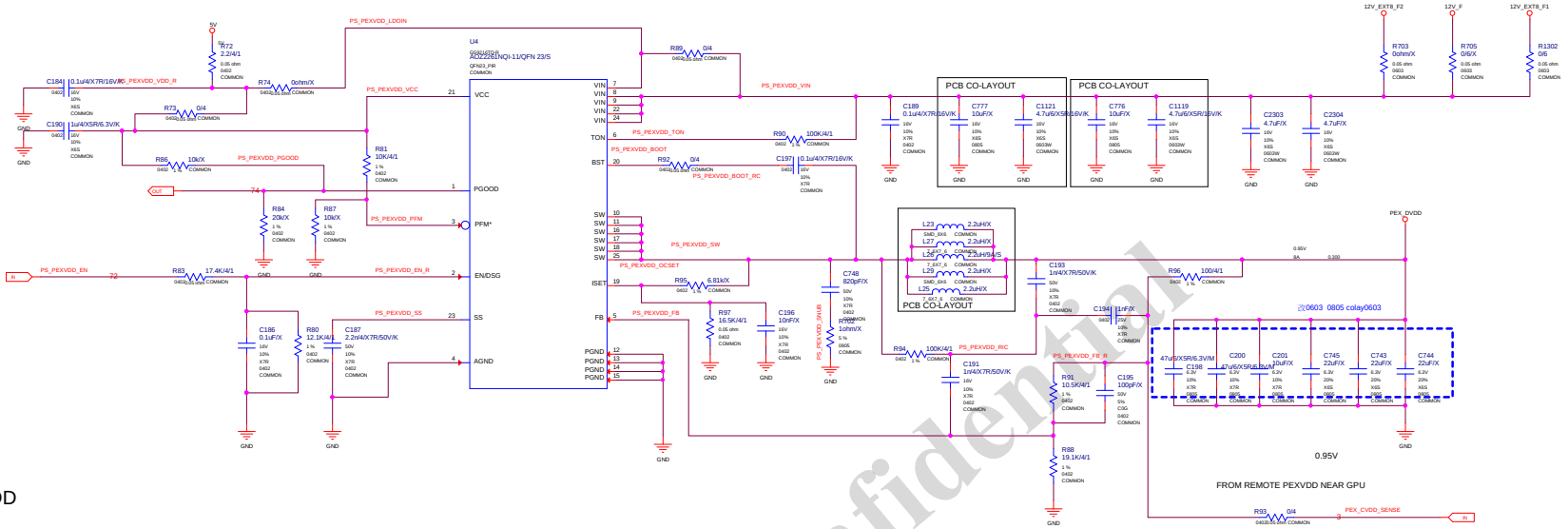

PEX_DVDD

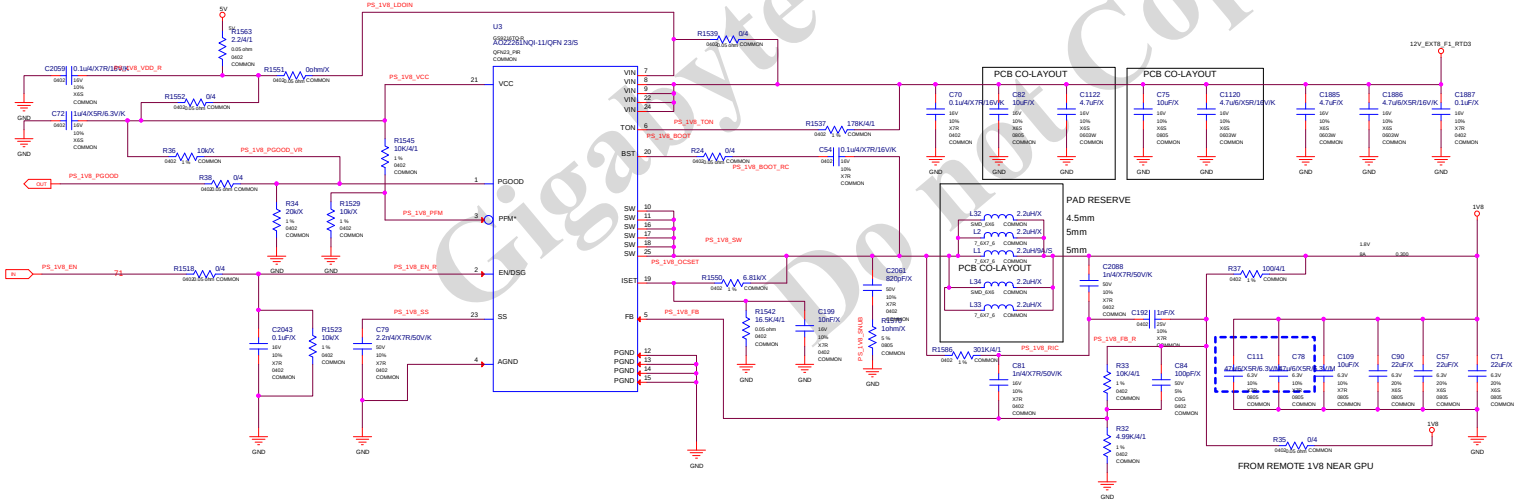

1V8

Gigabyte Confidential
Do not Copy

ASSEMBLY	<ASSEMBLY_DESCRIPTION>
PAGE DETAIL	PS: PEX_DVDD and 1V8

ALL NVIDIA DESIGN SPECIFICATIONS, REFERENCE SPECIFICATIONS, REFERENCE BOARDS, FILES, DRAWINGS, DIAGNOSTICS, LISTS AND OTHER DOCUMENTS OR INFORMATION (TOGETHER AND SEPARATELY, 'MATERIALS') ARE BEING PROVIDED 'AS IS'. THE MATERIALS MAY CONTAIN KNOWN AND UNKNOWN VIOLATIONS OR DEVIATIONS OF INDUSTRY STANDARDS AND SPECIFICATIONS. NVIDIA MAKES NO WARRANTIES, EXPRESSED, IMPLIED, STATUTORY OR OTHERWISE WITH RESPECT TO THE MATERIALS OR OTHERWISE, AND EXPRESSLY DISCLAIMS ALL IMPLIED WARRANTIES INCLUDING, WITHOUT LIMITATION, THE WARRANTIES OF DESIGN, OF NONINFRINGEMENT, MERCHANTABILITY OR FITNESS FOR A PARTICULAR PURPOSE, OR ARISING FROM A COURSE OF DEALING, TRADE USAGE, TRADE PRACTICE, OR INDUSTRY STANDARDS.

GIGABYTE

Title	PS: PEX_DVDD 1V8 Rail	
Size: Custom	Document Number: GV-N3080AORUSX W-10GD	Rev: 1.0
Date: Wednesday, September 30, 2020	Sheet 35 of 79	

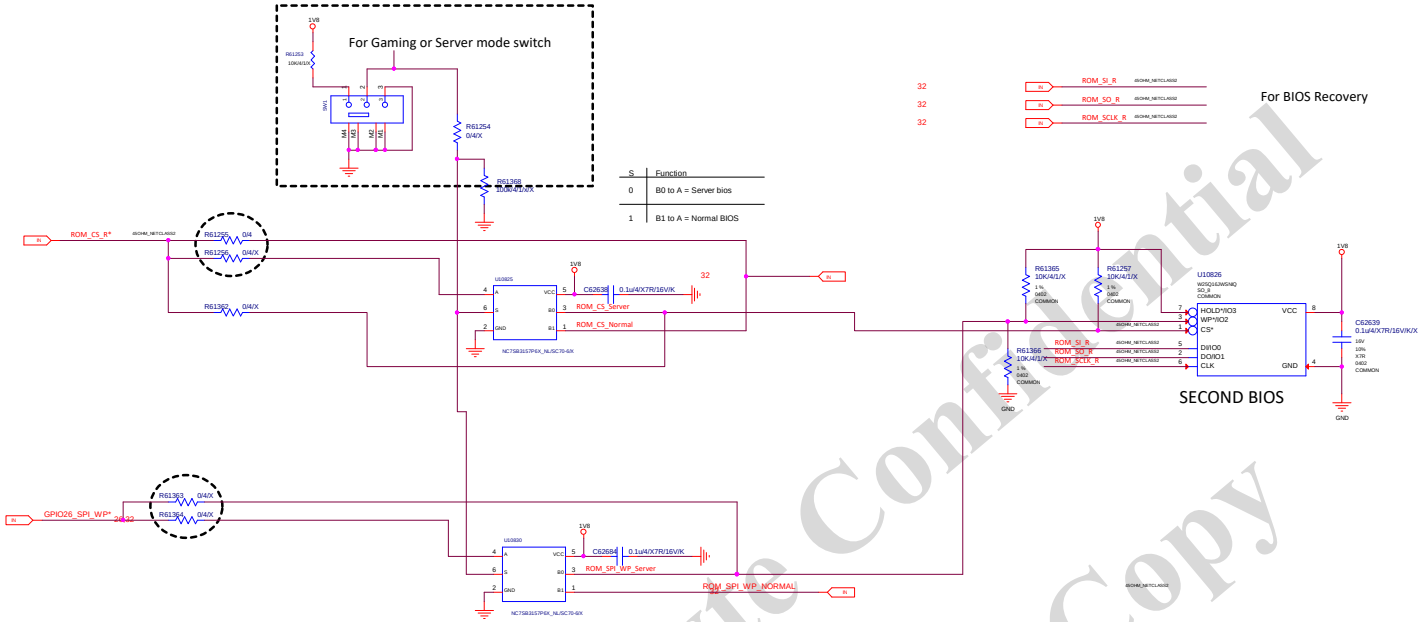

Gigabyte Confidential
Do not Copy

ASSEMBLY | <ASSEMBLY_DESCRIPTION>
PAGE DETAIL | BLANK

ALL NVIDIA DESIGN SPECIFICATIONS, REFERENCE SPECIFICATIONS, REFERENCE BOARDS, FILES, DRAWINGS, DIAGNOSTICS, LISTS AND OTHER DOCUMENTS OR INFORMATION (TOGETHER AND SEPARATELY, 'MATERIALS') ARE BEING PROVIDED 'AS IS'. THE MATERIALS CONTAIN KNOWN AND UNKNOWN VIOLATIONS OR DEVIATIONS OF INDUSTRY STANDARDS AND SPECIFICATIONS. NVIDIA MAKES NO WARRANTIES, EXPRESSED, IMPLIED, STATUTORY OR OTHERWISE WITH RESPECT TO THE MATERIALS OR OTHERWISE, AND EXPRESSLY DISCLAIMS IMPLIED WARRANTIES INCLUDING, WITHOUT LIMITATION, THE WARRANTIES OF DESIGN, OF NONINFRINGEMENT, MERCHANTABILITY OR FITNESS FOR A PARTICULAR PURPOSE, OR ARISING FROM A COURSE OF DEALING, TRADE USAGE, TRADE PRACTICE, OR INDUSTRY STANDARDS.

	GIGABYTE
Title	DUAL BIOS
Size: Custom	Document Number: GV-N3080AORUSX W-10GD
Rev: 1.0	
Date: Wednesday, September 30, 2020	Sheet 38 of 79

PS: FBVDD Controller OVR3

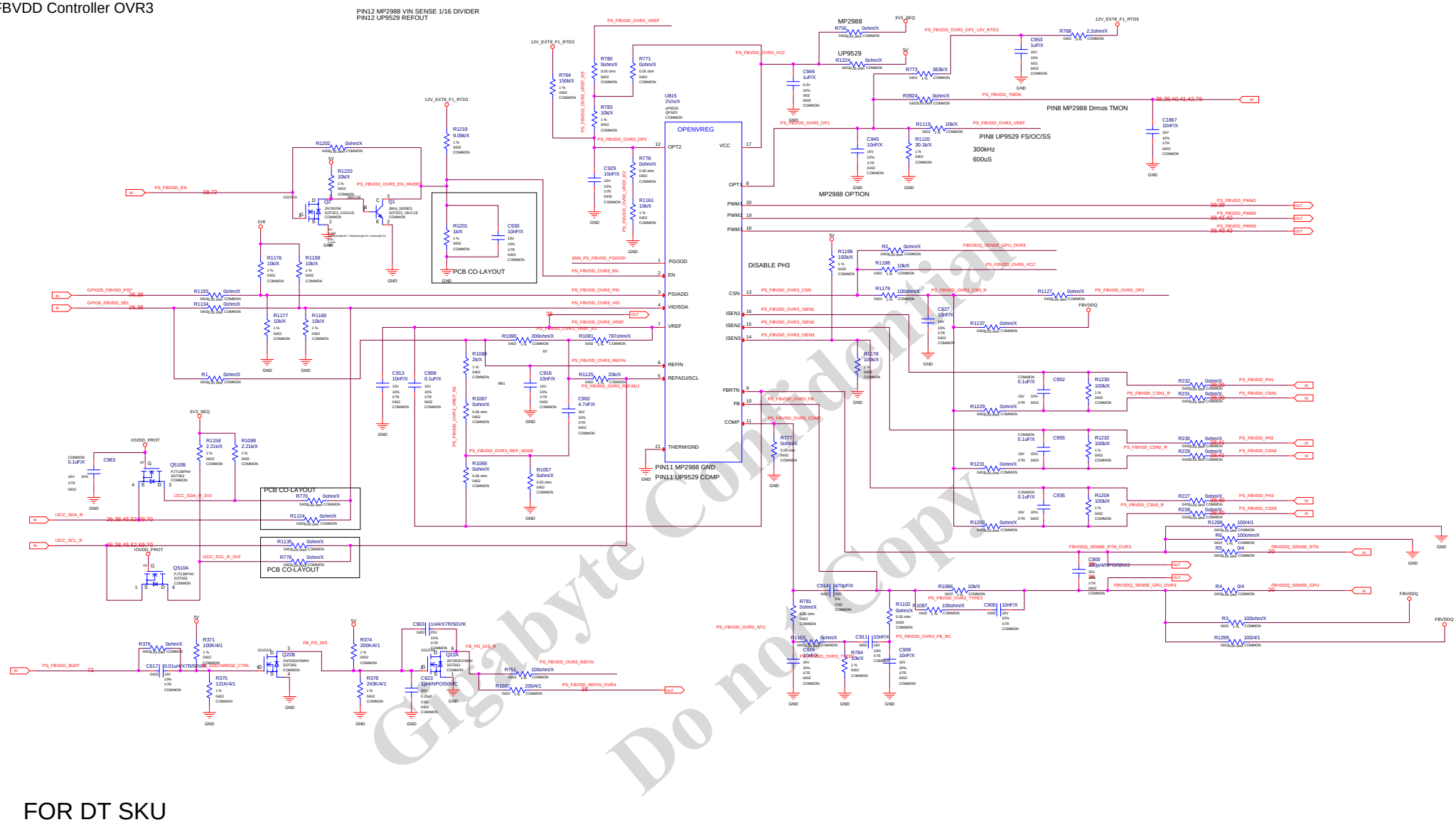

FOR DT SKU

Gigabyte Confidential
Do not Copy

ALL NVIDIA DESIGN SPECIFICATIONS, REFERENCE SPECIFICATIONS, REFERENCE BOARDS, FILES, DRAWINGS, DIAGNOSTICS, LISTS AND OTHER DOCUMENTS OR INFORMATION (TOGETHER AND SEPARATELY, "MATERIALS") ARE BEING PROVIDED 'AS IS'. THE MATERIALS CONTAIN KNOWN AND UNKNOWN VIOLATIONS OR DEVIATIONS OF INDUSTRY STANDARDS AND SPECIFICATIONS. NVIDIA MAKES NO WARRANTIES, EXPRESSED, IMPLIED, STATUTORY OR OTHERWISE WITH RESPECT TO THE MATERIALS OR OTHERWISE, AND EXPRESSLY DISCLAIMS ALL IMPLIED WARRANTIES INCLUDING, WITHOUT LIMITATION, THE WARRANTIES OF DESIGN, OF NONINFRINGEMENT, MERCHANTABILITY OR FITNESS FOR A PARTICULAR PURPOSE, OR ARISING FROM A COURSE OF DEALING, TRADE USAGE, TRADE PRACTICE, OR INDUSTRY STANDARDS.

ASSEMBLY <ASSEMBLY_DESCRIPTION>
PAGE DETAIL PS: FBVDD Controller OVR3

GIGABYTE		
Title: PS: FBVDD Controller OVR3		
Size: Custom	Document Number: GV-N3080AORUSX W-10GD	Rev: 1.0
Date: Wednesday, September 30, 2020	Sheet 37 of 79	

PS:FBVDDQ OVR4

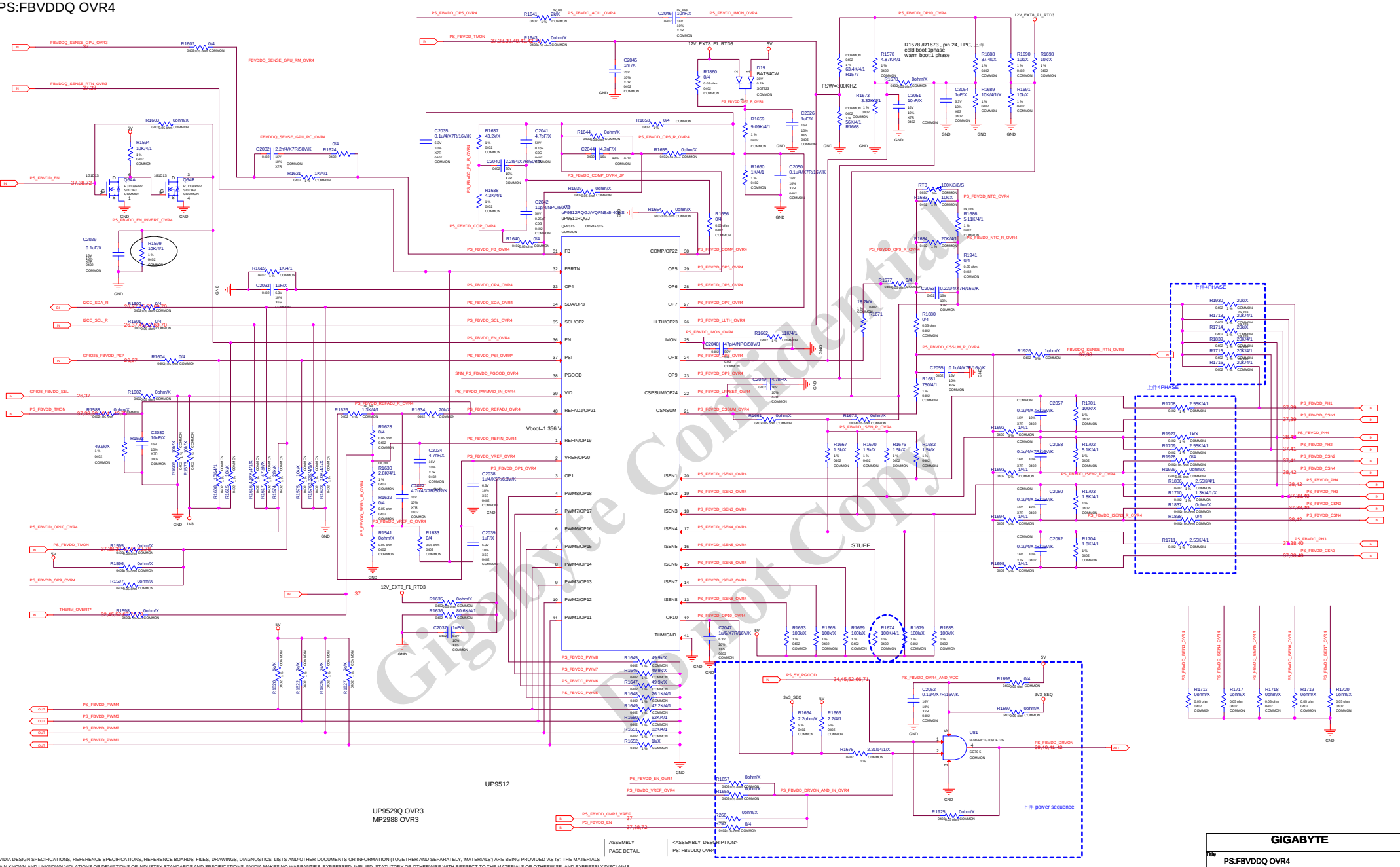
UP9512
UP9529Q OVR3
MP2988 OVR3
FSW=300KHZ
STUFF
Vboot=1.356 V
12V_EXT8_F1_RTD3
PS_FBVDD_DRVON
PS_FBVDD_DRVON_AND_IN_OVR4
PS_FBVDD_VREF_OVR4
PS_FBVDD_EN_OVR4
PS_FBVDD_VREF_C_OVR4
PS_FBVDD_REFIN_R_OVR4
PS_FBVDD_REFADJ_R_OVR4
PS_FBVDD_ISEN_R_OVR4
PS_FBVDD_CSSUM_R_OVR4
PS_FBVDD_NTC_R_OVR4
PS_FBVDD_OPS_R_OVR4
PS_FBVDD_FB_R_OVR4
PS_FBVDD_COMP_OVR4_JP
PS_FBVDD_OPS_R_OVR4
PS_FBVDD_OPS_OVR4
PS_FBVDD_OPS_OVR4
PS_FBVDD_OPS

PS: FBVDD PH1

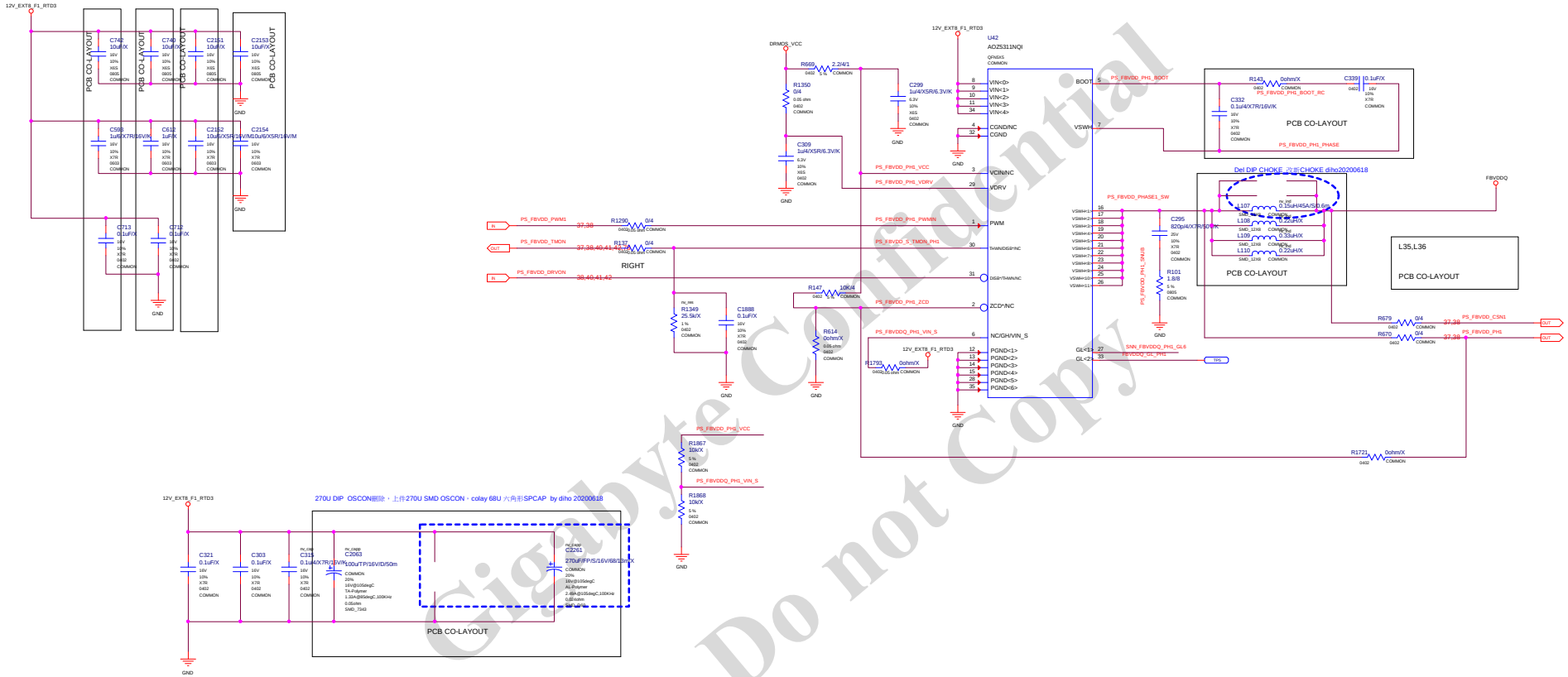

Gigabyte Confidential
Do not Copy

ASSEMBLY <ASSEMBLY_DESCRIPTION>
PAGE DETAIL PS: FBVDD PH1

ALL NVIDIA DESIGN SPECIFICATIONS, REFERENCE SPECIFICATIONS, REFERENCE BOARDS, FILES, DRAWINGS, DIAGNOSTICS, LISTS AND OTHER DOCUMENTS OR INFORMATION (TOGETHER AND SEPARATELY, 'MATERIALS') ARE BEING PROVIDED 'AS IS'. THE MATERIALS MAY CONTAIN KNOWN AND UNKNOWN VIOLATIONS OR DEVIATIONS OF INDUSTRY STANDARDS AND SPECIFICATIONS. NVIDIA MAKES NO WARRANTIES, EXPRESSED, IMPLIED, STATUTORY OR OTHERWISE WITH RESPECT TO THE MATERIALS OR OTHERWISE, AND EXPRESSLY DISCLAIMS ALL IMPLIED WARRANTIES INCLUDING, WITHOUT LIMITATION, THE WARRANTIES OF DESIGN, OF NONINFRINGEMENT, MERCHANTABILITY OR FITNESS FOR A PARTICULAR PURPOSE, OR ARISING FROM A COURSE OF DEALING, TRADE USAGE, TRADE PRACTICE, OR INDUSTRY STANDARDS.

GIGABYTE		
Title: PS: FBVDD PH1		
Size: Custom	Document Number: GV-N3080AORUSX W-10GD	Rev: 1.0
Date: Wednesday, September 30, 2020	Sheet 39 of 79	

PS: FBVDD PH3

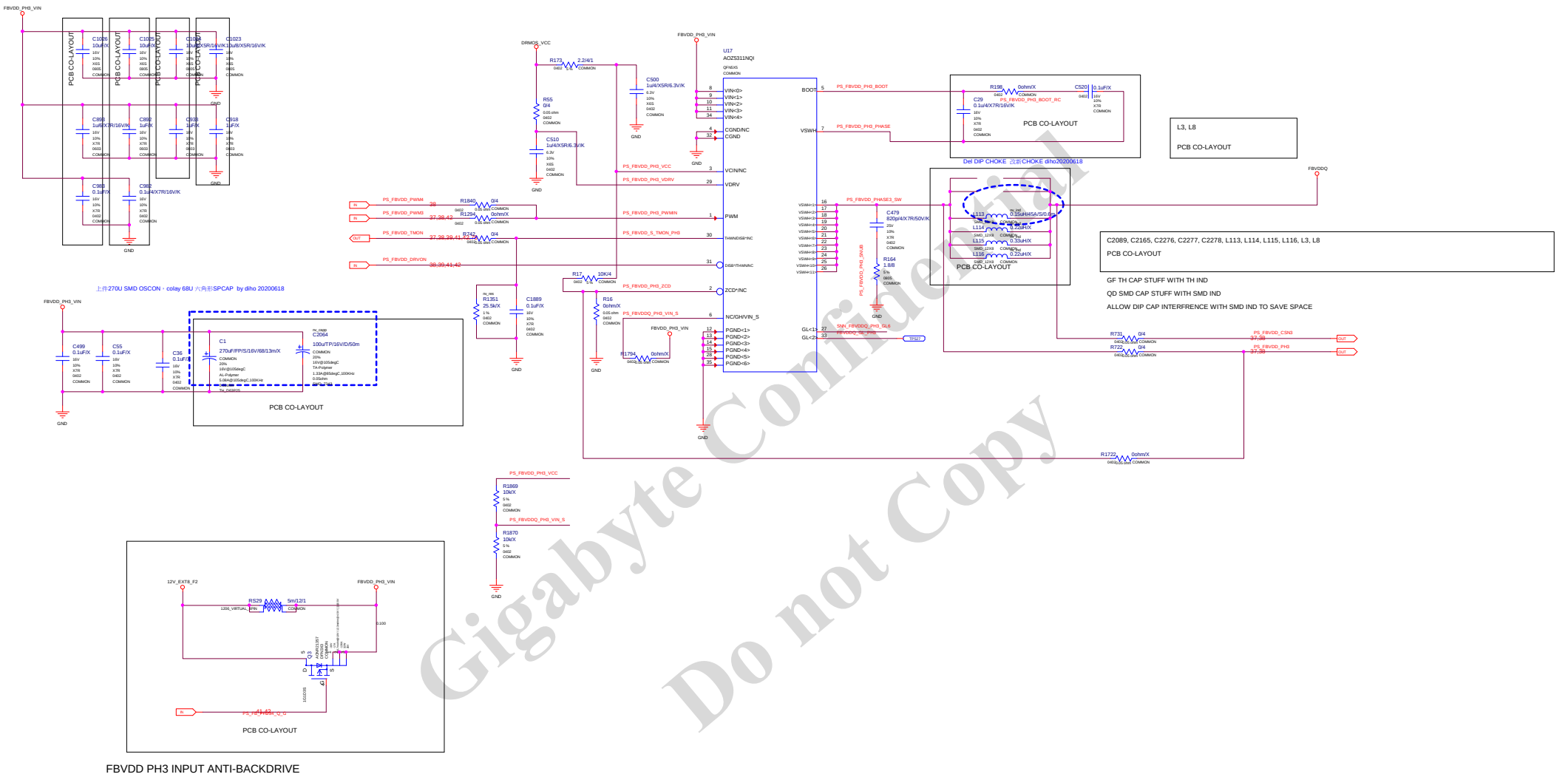

Gigabyte Confidential
Do not Copy

ASSEMBLY	<ASSEMBLY_DESCRIPTION>
PAGE DETAIL	PS: FBVDD PH3

ALL NVIDIA DESIGN SPECIFICATIONS, REFERENCE SPECIFICATIONS, REFERENCE BOARDS, FILES, DRAWINGS, DIAGNOSTICS, LISTS AND OTHER DOCUMENTS OR INFORMATION (TOGETHER AND SEPARATELY, 'MATERIALS') ARE BEING PROVIDED 'AS IS'. THE MATERIALS MAY CONTAIN KNOWN AND UNKNOWN VIOLATIONS OR DEVIATIONS OF INDUSTRY STANDARDS AND SPECIFICATIONS. NVIDIA MAKES NO WARRANTIES, EXPRESSED, IMPLIED, STATUTORY OR OTHERWISE WITH RESPECT TO THE MATERIALS OR OTHERWISE, AND EXPRESSLY DISCLAIMS ANY IMPLIED WARRANTIES INCLUDING, WITHOUT LIMITATION, THE WARRANTIES OF DESIGN, OF NONINFRINGEMENT, MERCHANTABILITY OR FITNESS FOR A PARTICULAR PURPOSE, OR ARISING FROM A COURSE OF DEALING, TRADE USAGE, TRADE PRACTICE, OR INDUSTRY STANDARDS.

GIGABYTE

Title: PS: FBVDD PH3		
Size: Custom	Document Number: GV-N3080AORUSX W-10GD	Rev: 1.0
Date: Wednesday, September 30, 2020	Sheet 40 of 79	

PS: FBVDD PH2

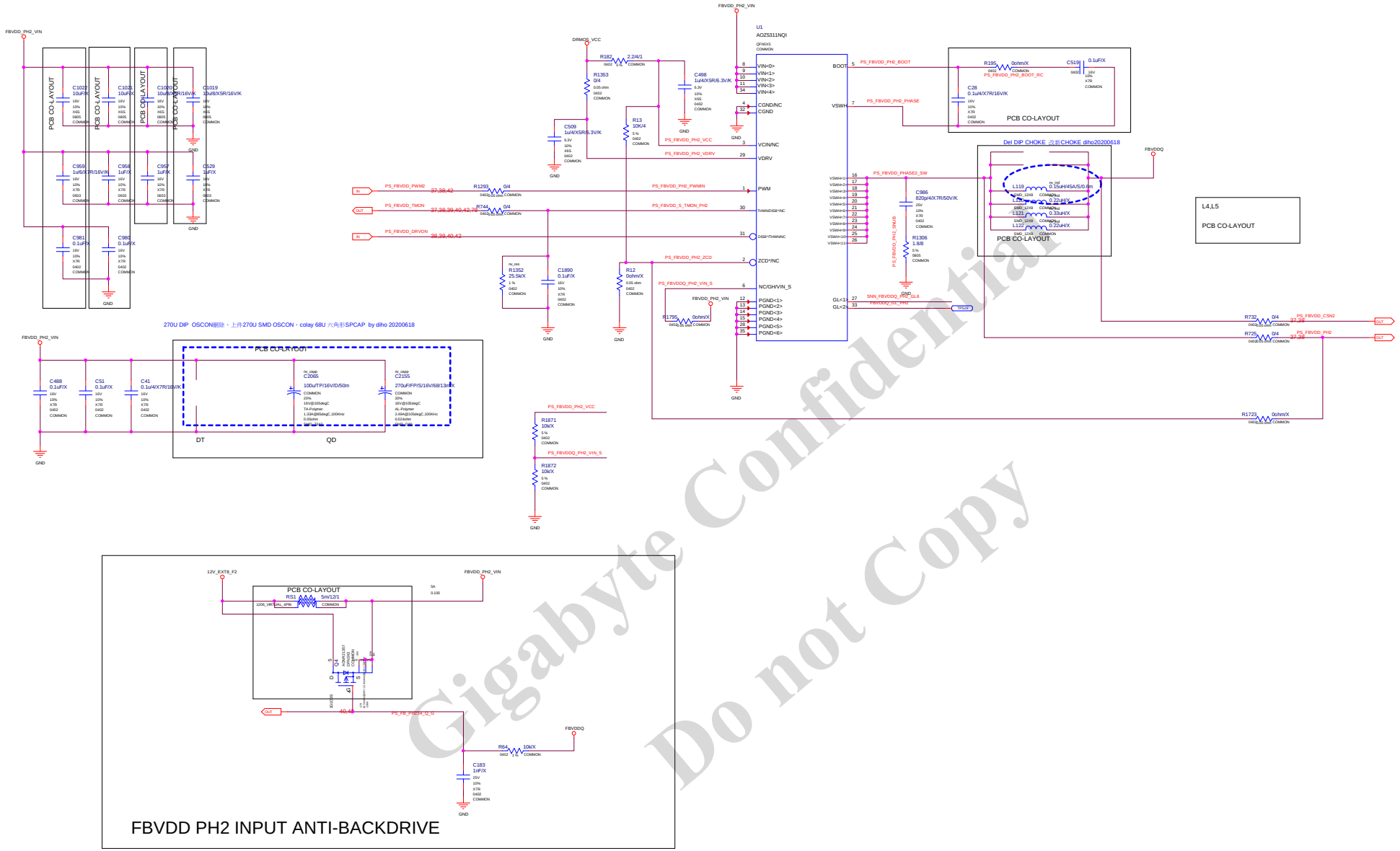

Gigabyte Confidential
Do not Copy

ASSEMBLY	<ASSEMBLY_DESCRIPTION>
PAGE DETAIL	PS: FBVDD PH2

ALL NVIDIA DESIGN SPECIFICATIONS, REFERENCE SPECIFICATIONS, REFERENCE BOARDS, FILES, DRAWINGS, DIAGNOSTICS, LISTS AND OTHER DOCUMENTS OR INFORMATION (TOGETHER AND SEPARATELY, 'MATERIALS') ARE BEING PROVIDED 'AS IS'. THE MATERIALS MAY CONTAIN KNOWN AND UNKNOWN VIOLATIONS OR DEVIATIONS OF INDUSTRY STANDARDS AND SPECIFICATIONS. NVIDIA MAKES NO WARRANTIES, EXPRESSED, IMPLIED, STATUTORY OR OTHERWISE WITH RESPECT TO THE MATERIALS OR OTHERWISE, AND EXPRESSLY DISCLAIMS ANY IMPLIED WARRANTIES INCLUDING, WITHOUT LIMITATION, THE WARRANTIES OF DESIGN, OF NONINFRINGEMENT, MERCHANTABILITY OR FITNESS FOR A PARTICULAR PURPOSE, OR ARISING FROM A COURSE OF DEALING, TRADE USAGE, TRADE PRACTICE, OR INDUSTRY STANDARDS.

GIGABYTE			
Title: PS: FBVDD PH2			
Size: Custom	Document Number: GV-N3080AORUSX W-10GD		Rev: 1.0
Date: Wednesday, September 30, 2020	Sheet: 41 of 79		

PS: FBVDD PH4

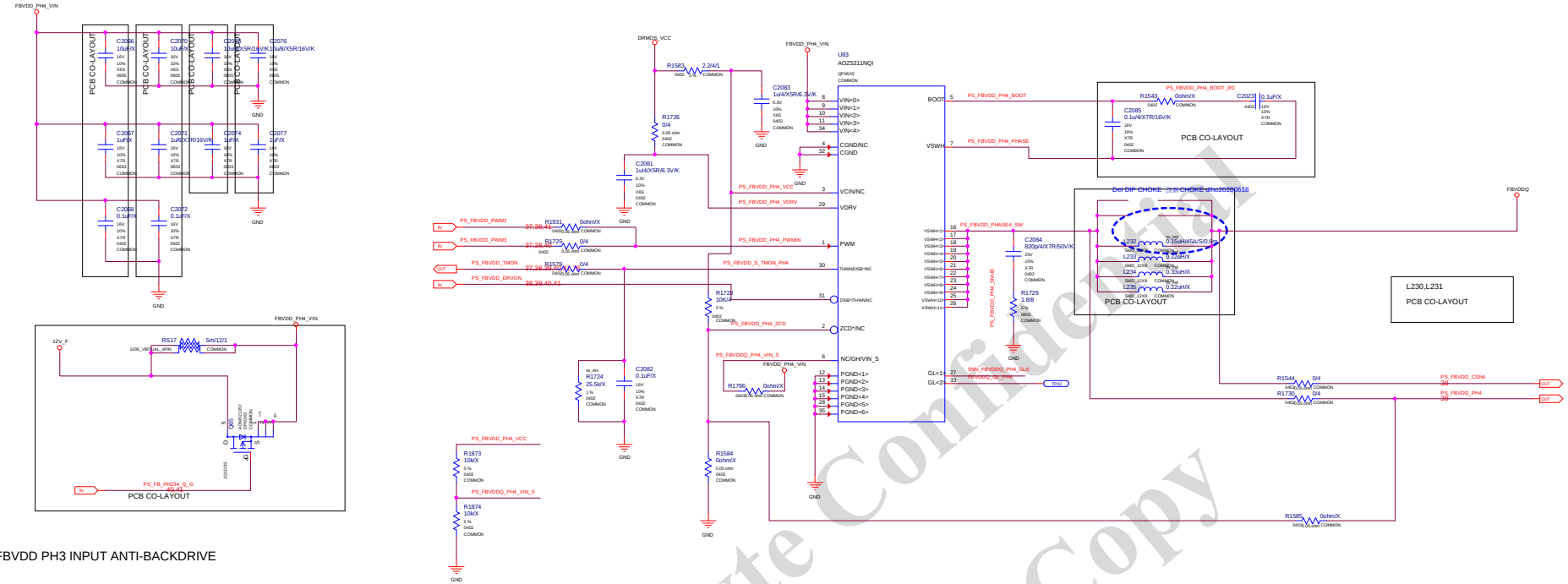

FBVDD PH3 INPUT ANTI-BACKDRIVE

270U DIP OSCON 改2700U SMD OSCON並留留 2 X 100U by dho 20200618

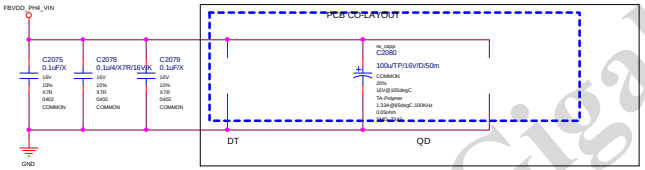

上件4PHASE

Gigabyte Confidential
Do not Copy

ASSEMBLY <ASSEMBLY_DESCRIPTION>
PAGE DETAIL PS: FBVDD PH4

ALL NVIDIA DESIGN SPECIFICATIONS, REFERENCE SPECIFICATIONS, REFERENCE BOARDS, FILES, DRAWINGS, DIAGNOSTICS, LISTS AND OTHER DOCUMENTS OR INFORMATION (TOGETHER AND SEPARATELY, 'MATERIALS') ARE BEING PROVIDED 'AS IS'. THE MATERIALS MAY CONTAIN KNOWN AND UNKNOWN VIOLATIONS OR DEVIATIONS OF INDUSTRY STANDARDS AND SPECIFICATIONS. NVIDIA MAKES NO WARRANTIES, EXPRESSED, IMPLIED, STATUTORY OR OTHERWISE WITH RESPECT TO THE MATERIALS OR OTHERWISE, AND EXPRESSLY DISCLAIMS ANY IMPLIED WARRANTIES INCLUDING, WITHOUT LIMITATION, THE WARRANTIES OF DESIGN, OF NONINFRINGEMENT, MERCHANTABILITY OR FITNESS FOR A PARTICULAR PURPOSE, OR ARISING FROM A COURSE OF DEALING, TRADE USAGE, TRADE PRACTICE, OR INDUSTRY STANDARDS.

GIGABYTE		
Title: PS: FBVDD PH4		
Size: Custom	Document Number: GV-N3080AORUSX W-10GD	Rev: 1.0
Date: Wednesday, September 30, 2020	Sheet 42 of 79	

PS: FBVDD OUTPUT CAP

3x 820uF TH FBVDD OUTPUT BULK CAPS

820U DIP OSCON 改330U 預留在BOT，原SMD OSCON改常用footprint上件820U by diho 20200619

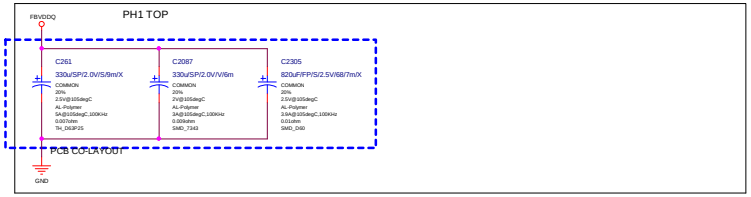

820U DIP OSCON 改330U SMD 7343 by diho 20200619

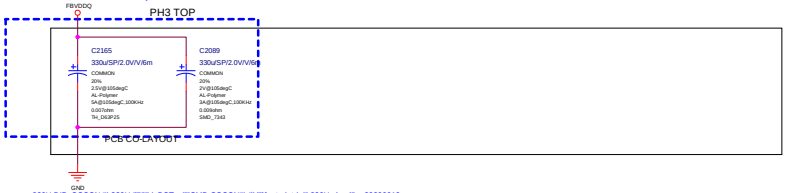

820U DIP OSCON 改330U 預留在BOT，原SMD OSCON改常用footprint上件820U by diho 20200619

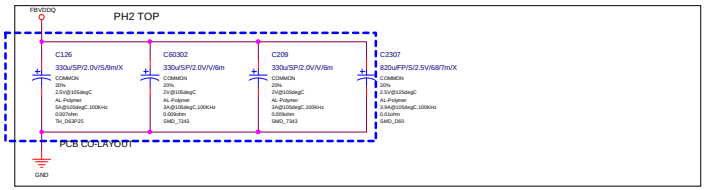

820U DIP OSCON 改330U 預留在BOT，原SMD OSCON改常用footprint上件820U by diho 20200619

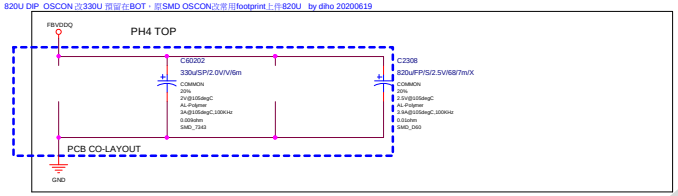

新增1顆 330U 預留在BOT，原SMD OSCON改常用footprint上件820U by diho 20200620

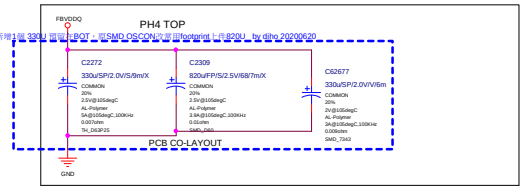

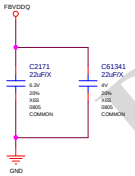

CLOSE TO FB PH3 OUTPUT STUFF

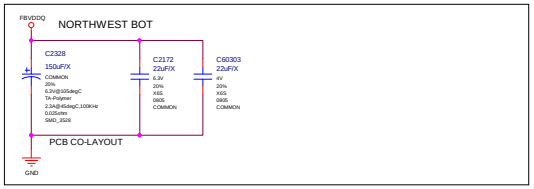

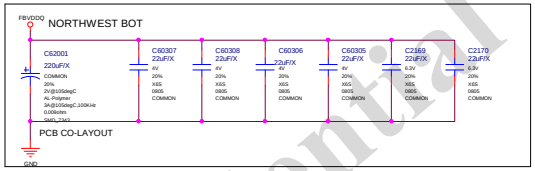

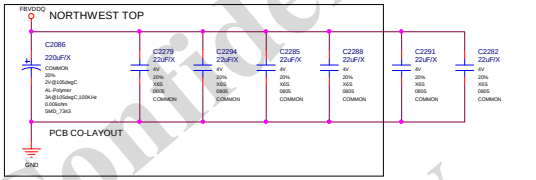

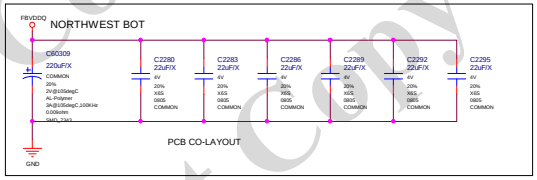

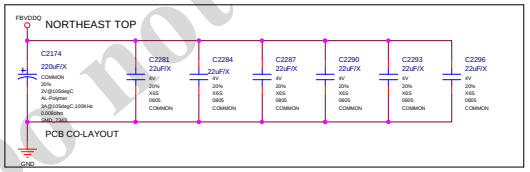

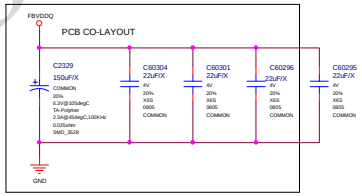

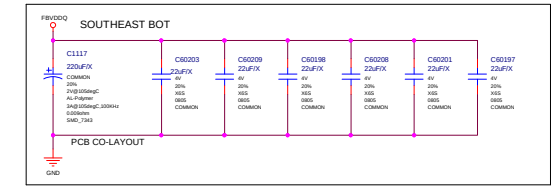

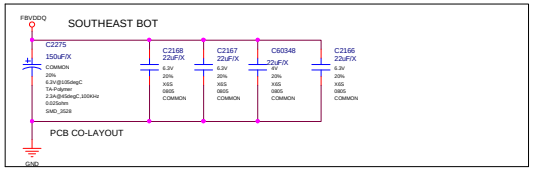

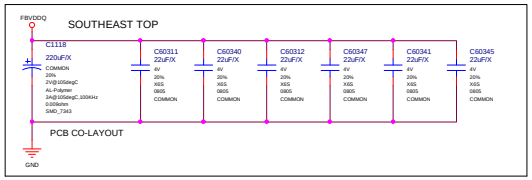

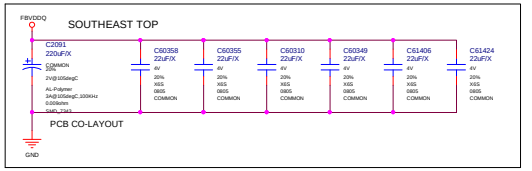

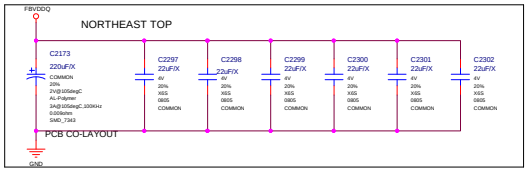

Gigabyte Confidential
Do not Copy

ASSEMBLY	<ASSEMBLY_DESCRIPTION>
PAGE DETAIL	PS: FBVDD OUTPUT CAP

ALL NVIDIA DESIGN SPECIFICATIONS, REFERENCE SPECIFICATIONS, REFERENCE BOARDS, FILES, DRAWINGS, DIAGNOSTICS, LISTS AND OTHER DOCUMENTS OR INFORMATION (TOGETHER AND SEPARATELY, 'MATERIALS') ARE BEING PROVIDED 'AS IS'. THE MATERIALS MAY CONTAIN KNOWN AND UNKNOWN VIOLATIONS OR DEVIATIONS OF INDUSTRY STANDARDS AND SPECIFICATIONS. NVIDIA MAKES NO WARRANTIES, EXPRESSED, IMPLIED, STATUTORY OR OTHERWISE WITH RESPECT TO THE MATERIALS OR OTHERWISE, AND EXPRESSLY DISCLAIMS ALL IMPLIED WARRANTIES INCLUDING, WITHOUT LIMITATION, THE WARRANTIES OF DESIGN, OF NONINFRINGEMENT, MERCHANTABILITY OR FITNESS FOR A PARTICULAR PURPOSE, OR ARISING FROM A COURSE OF DEALING, TRADE USAGE, TRADE PRACTICE, OR INDUSTRY STANDARDS.

GIGABYTE

Title	PS: FBVDD OUTPUT CAP	
Size: Custom	Document Number: GV-N3080AORUSX W-10GD	Rev: 1.0
Date: Wednesday, September 30, 2020	Sheet 43 of 79	

Added for A01 x16

ADDED FOR A00 X16 DESIGN: PLACE UNDER MEMORIES

Gigabyte Confidential
Do Not Copy

ASSEMBLY	<ASSEMBLY_DESCRIPTION>
PAGE DETAIL	PS: FBVDD_OUTPUT_CAP_NEAR_MEMORY

ALL NVIDIA DESIGN SPECIFICATIONS, REFERENCE SPECIFICATIONS, REFERENCE BOARDS, FILES, DRAWINGS, DIAGNOSTICS, LISTS AND OTHER DOCUMENTS OR INFORMATION (TOGETHER AND SEPARATELY, 'MATERIALS') ARE BEING PROVIDED 'AS IS'. THE MATERIALS MAY CONTAIN KNOWN AND UNKNOWN VIOLATIONS OR DEVIATIONS OF INDUSTRY STANDARDS AND SPECIFICATIONS. NVIDIA MAKES NO WARRANTIES, EXPRESSED, IMPLIED, STATUTORY OR OTHERWISE WITH RESPECT TO THE MATERIALS OR OTHERWISE, AND EXPRESSLY DISCLAIMS ALL IMPLIED WARRANTIES INCLUDING, WITHOUT LIMITATION, THE WARRANTIES OF DESIGN, OF NONINFRINGEMENT, MERCHANTABILITY OR FITNESS FOR A PARTICULAR PURPOSE, OR ARISING FROM A COURSE OF DEALING, TRADE USAGE, TRADE PRACTICE, OR INDUSTRY STANDARDS.

GIGABYTE

Title: PS: FBVDD OUTPUT CAP_NEAR

Size	Document Number	Rev
Custom	GV-N3080AORUSX W-10GD	1.0

Date: Wednesday, September 30, 2020 Sheet 44 of 79

PS: MSVDD

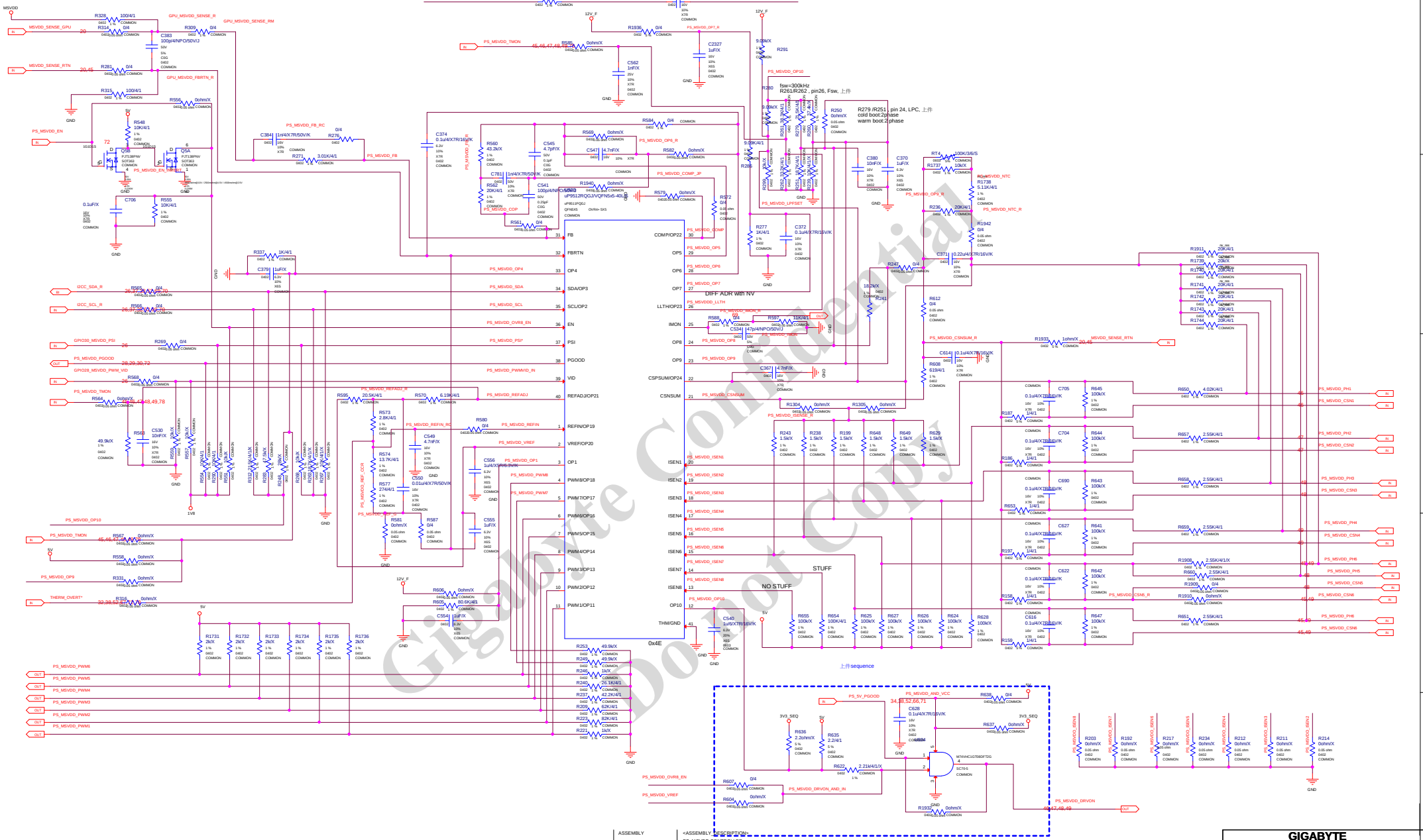

Gigabyte Confidential
Do not Copy

ASSEMBLY
PAGE DETAIL

<ASSEMBLY DESCRIPTION>
PS: MSVDD CONTROLLER

ALL NVIDIA DESIGN SPECIFICATIONS, REFERENCE SPECIFICATIONS, REFERENCE BOARDS, FILES, DRAWINGS, DIAGNOSTICS, LISTS AND OTHER DOCUMENTS OR INFORMATION (TOGETHER AND SEPARATELY, 'MATERIALS') ARE BEING PROVIDED 'AS IS'. THE MATERIALS MAY CONTAIN KNOWN AND UNKNOWN VIOLATIONS OR DEVIATIONS OF INDUSTRY STANDARDS AND SPECIFICATIONS. NVIDIA MAKES NO WARRANTIES, EXPRESSED, IMPLIED, STATUTORY OR OTHERWISE WITH RESPECT TO THE MATERIALS OR OTHERWISE, AND EXPRESSLY DISCLAIMS ANY IMPLIED WARRANTIES INCLUDING, WITHOUT LIMITATION, THE WARRANTIES OF DESIGN, OF NONINFRINGEMENT, MERCHANTABILITY OR FITNESS FOR A PARTICULAR PURPOSE, OR ARISING FROM A COURSE OF DEALING, TRADE USAGE, TRADE PRACTICE, OR INDUSTRY STANDARDS.

GIGABYTE

Title	PS: MSVDD	
Size: Custom	Document Number: GV-N3080AORUSX W-10GD	Rev: 1.0
Date: Wednesday, September 30, 2020	Sheet 45 of 79	

PS: MSVDD Phase 1

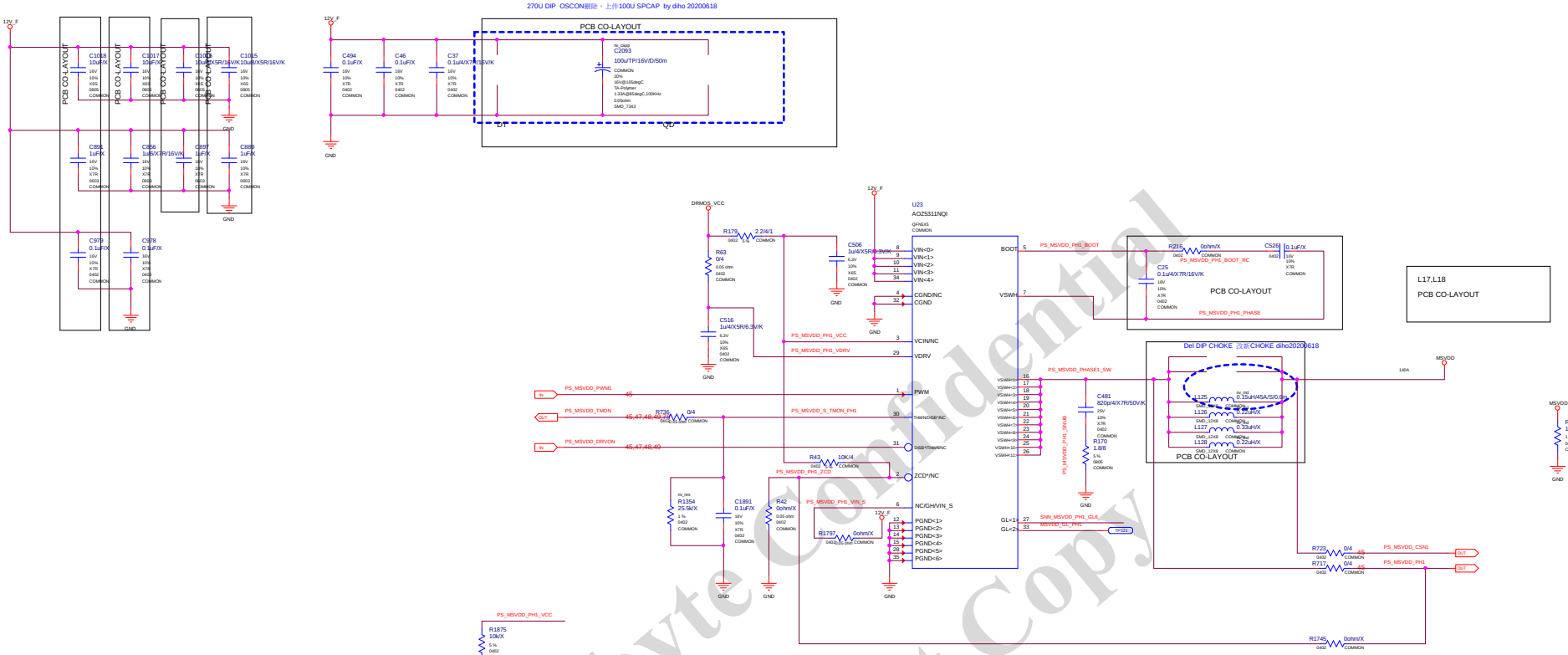

Gigabyte Confidential
Do not Copy

ASSEMBLY <ASSEMBLY_DESCRIPTION>
PAGE DETAIL PS: MSVDD PH1

ALL NVIDIA DESIGN SPECIFICATIONS, REFERENCE SPECIFICATIONS, REFERENCE BOARDS, FILES, DRAWINGS, DIAGNOSTICS, LISTS AND OTHER DOCUMENTS OR INFORMATION (TOGETHER AND SEPARATELY, 'MATERIALS') ARE BEING PROVIDED 'AS IS'. THE MATERIALS MAY CONTAIN KNOWN AND UNKNOWN VIOLATIONS OR DEVIATIONS OF INDUSTRY STANDARDS AND SPECIFICATIONS. NVIDIA MAKES NO WARRANTIES, EXPRESSED, IMPLIED, STATUTORY OR OTHERWISE WITH RESPECT TO THE MATERIALS OR OTHERWISE, AND EXPRESSLY DISCLAIMS ANY IMPLIED WARRANTIES INCLUDING, WITHOUT LIMITATION, THE WARRANTIES OF DESIGN, OF NONINFRINGEMENT, MERCHANTABILITY OR FITNESS FOR A PARTICULAR PURPOSE, OR ARISING FROM A COURSE OF DEALING, TRADE USAGE, TRADE PRACTICE, OR INDUSTRY STANDARDS.

GIGABYTE

Title: PS: MSVDD Phase 1

Size	Document Number	Rev
Custom	GV-N3080AORUSX W-10GD	1.0

Date: Wednesday, September 30, 2020 Sheet 46 of 79

PS: MSVDD PH 2

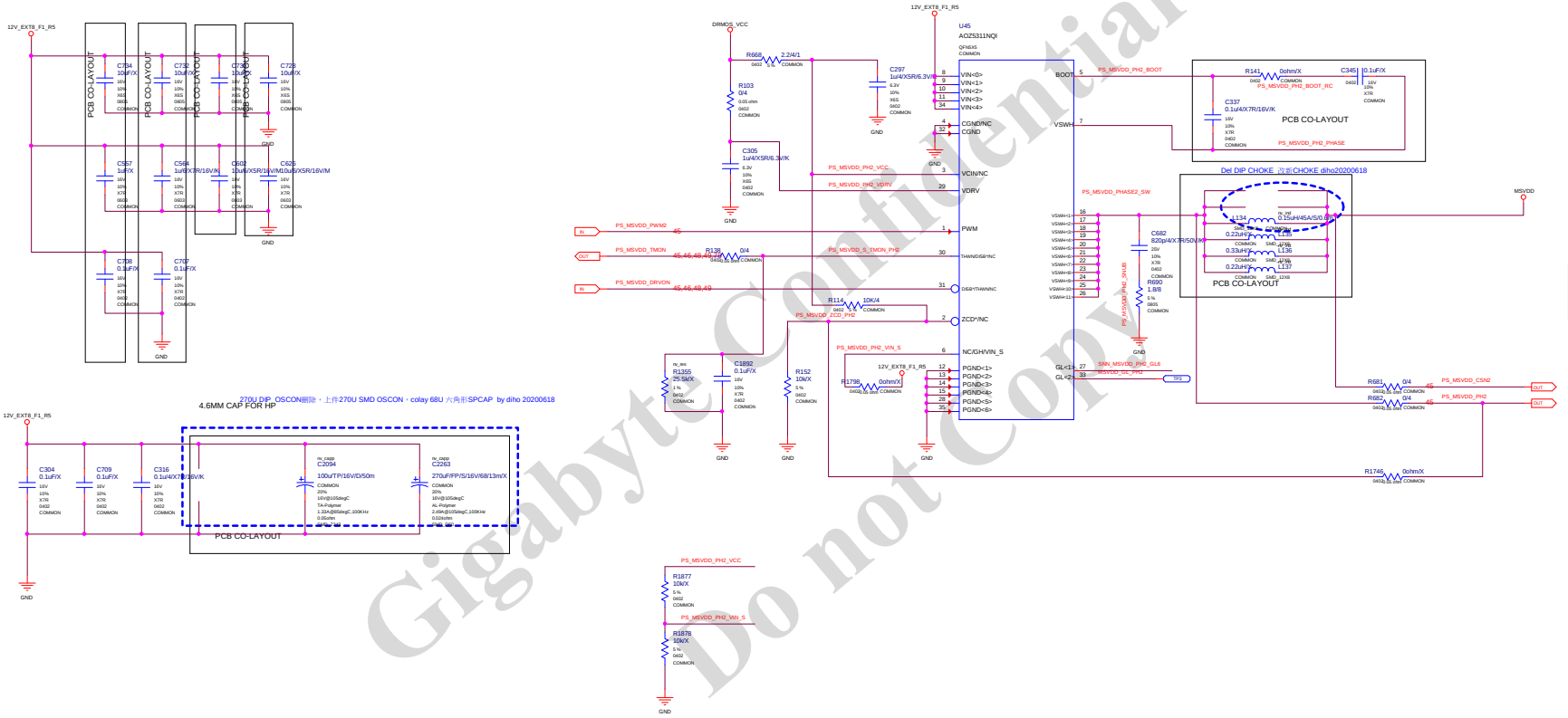

Gigabyte Confidential
Do not Copy

ALL NVIDIA DESIGN SPECIFICATIONS, REFERENCE SPECIFICATIONS, REFERENCE BOARDS, FILES, DRAWINGS, DIAGNOSTICS, LISTS AND OTHER DOCUMENTS OR INFORMATION (TOGETHER AND SEPARATELY, 'MATERIALS') ARE BEING PROVIDED 'AS IS'. THE MATERIALS MAY CONTAIN KNOWN AND UNKNOWN VIOLATIONS OR DEVIATIONS OF INDUSTRY STANDARDS AND SPECIFICATIONS. NVIDIA MAKES NO WARRANTIES, EXPRESSED, IMPLIED, STATUTORY OR OTHERWISE WITH RESPECT TO THE MATERIALS OR OTHERWISE, AND EXPRESSLY DISCLAIMS ALL IMPLIED WARRANTIES INCLUDING, WITHOUT LIMITATION, THE WARRANTIES OF DESIGN, OF NONINFRINGEMENT, MERCHANTABILITY OR FITNESS FOR A PARTICULAR PURPOSE, OR ARISING FROM A COURSE OF DEALING, TRADE USAGE, TRADE PRACTICE, OR INDUSTRY STANDARDS.

ASSEMBLY	<ASSEMBLY_DESCRIPTION>
PAGE DETAIL	PS: MSVDD PH2

GIGABYTE

Title: PS: MSVDD Phase 2		
Size: Custom	Document Number: GV-N3080AORUSX W-10GD	Rev: 1.0
Date: Wednesday, September 30, 2020	Sheet: 47 of 79	

PS:MSVDD Phase 3, 5

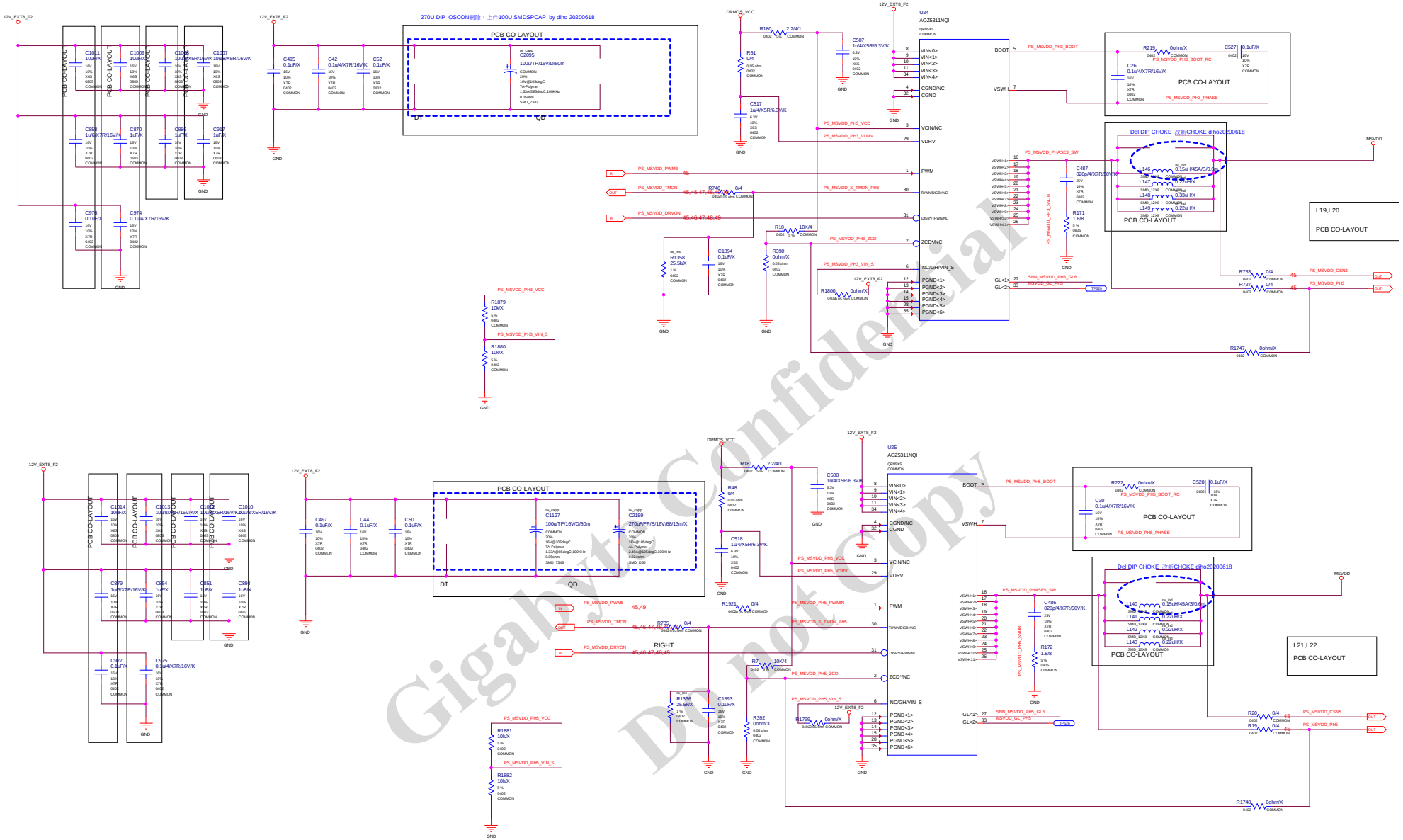

Gigabyte Confidential
Do not Copy

ASSEMBLY	<ASSEMBLY_DESCRIPTION>
PAGE DETAIL	PS: MSVDD PH3 and PH5

ALL NVIDIA DESIGN SPECIFICATIONS, REFERENCE SPECIFICATIONS, REFERENCE BOARDS, FILES, DRAWINGS, DIAGNOSTICS, LISTS AND OTHER DOCUMENTS OR INFORMATION (TOGETHER AND SEPARATELY, 'MATERIALS') ARE BEING PROVIDED 'AS IS'. THE MATERIALS MAY CONTAIN KNOWN AND UNKNOWN VIOLATIONS OR DEVIATIONS OF INDUSTRY STANDARDS AND SPECIFICATIONS. NVIDIA MAKES NO WARRANTIES, EXPRESSED, IMPLIED, STATUTORY OR OTHERWISE WITH RESPECT TO THE MATERIALS OR OTHERWISE, AND EXPRESSLY DISCLAIMS ALL IMPLIED WARRANTIES INCLUDING, WITHOUT LIMITATION, THE WARRANTIES OF DESIGN, OF NONINFRINGEMENT, MERCHANTABILITY OR FITNESS FOR A PARTICULAR PURPOSE, OR ARISING FROM A COURSE OF DEALING, TRADE USAGE, TRADE PRACTICE, OR INDUSTRY STANDARDS.

GIGABYTE

Title: PS: MSVDD Phase 3,5

Size	Document Number	Rev
Custom	GV-N3080AORUSX W-10GD	1.0

Date: Wednesday, September 30, 2020 Sheet 48 of 79

PS: MSVDD PH 4,6

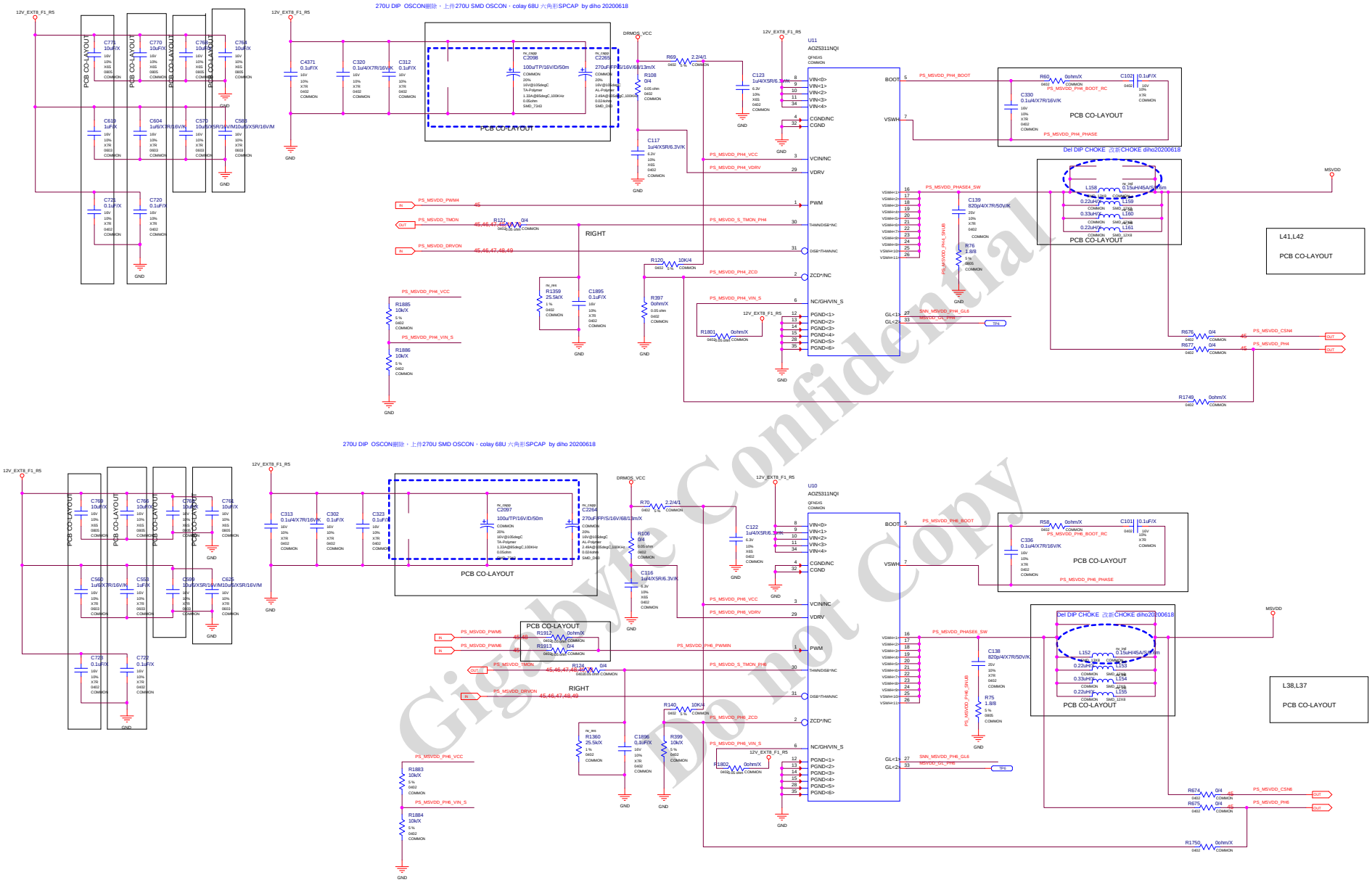

Gigabyte Confidential
Do not Copy

ASSEMBLY | <ASSEMBLY_DESCRIPTION>
PAGE DETAIL | PS: MSVDD PH4 and PH6

ALL NVIDIA DESIGN SPECIFICATIONS, REFERENCE SPECIFICATIONS, REFERENCE BOARDS, FILES, DRAWINGS, DIAGNOSTICS, LISTS AND OTHER DOCUMENTS OR INFORMATION (TOGETHER AND SEPARATELY, 'MATERIALS') ARE BEING PROVIDED 'AS IS'. THE MATERIALS MAY CONTAIN KNOWN AND UNKNOWN VIOLATIONS OR DEVIATIONS OF INDUSTRY STANDARDS AND SPECIFICATIONS. NVIDIA MAKES NO WARRANTIES, EXPRESSED, IMPLIED, STATUTORY OR OTHERWISE WITH RESPECT TO THE MATERIALS OR OTHERWISE, AND EXPRESSLY DISCLAIMS ALL IMPLIED WARRANTIES INCLUDING, WITHOUT LIMITATION, THE WARRANTIES OF DESIGN, OF NONINFRINGEMENT, MERCHANTABILITY OR FITNESS FOR A PARTICULAR PURPOSE, OR ARISING FROM A COURSE OF DEALING, TRADE USAGE, TRADE PRACTICE, OR INDUSTRY STANDARDS.

	GIGABYTE		
Title	PS: MSVDD Phase 4,6		
Size: Custom	Document Number: GV-N3080AORUSX W-10GD		Rev: 1.0
Date: Wednesday, September 30, 2020	Sheet: 49	of: 79	

PS:MSVDD OUTPUT CAP (TOP)

820U DIP OSCON 改330U 預留在BOT，原SMD OSCON改常用footprint上件820U by diho 20200619

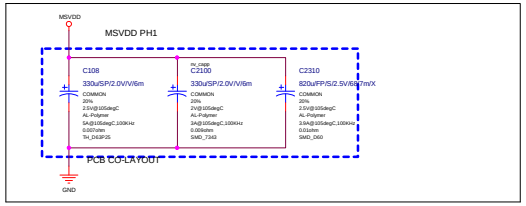

820U DIP OSCON 改330U 預留在BOT，原SMD OSCON改常用footprint上件820U by diho 20200619

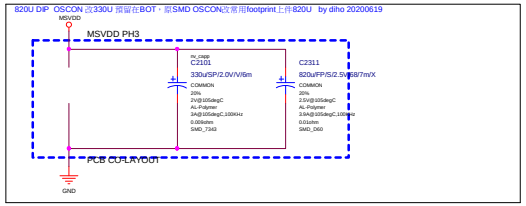

820U DIP OSCON 改330U 預留在BOT，原SMD OSCON改常用footprint上件820U by diho 20200619

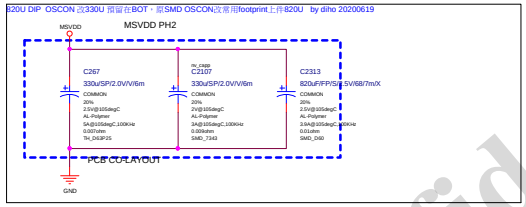

820U DIP OSCON 改330U 預留在BOT，原SMD OSCON改常用footprint上件820U by diho 20200619

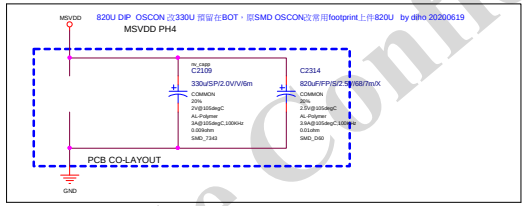

820U DIP OSCON 改330U 預留在BOT，原SMD OSCON改常用footprint上件820U by diho 20200619

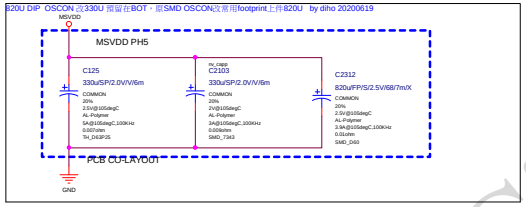

820U DIP OSCON 改330U 預留在BOT，原SMD OSCON改常用footprint上件820U by diho 20200619

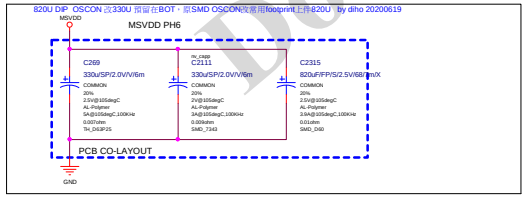

Gigabyte Confidential
Do not Copy

ASSEMBLY	<ASSEMBLY_DESCRIPTION>
PAGE DETAIL	PS: MSVDD OUTPUT CAP(TOP)

ALL NVIDIA DESIGN SPECIFICATIONS, REFERENCE SPECIFICATIONS, REFERENCE BOARDS, FILES, DRAWINGS, DIAGNOSTICS, LISTS AND OTHER DOCUMENTS OR INFORMATION (TOGETHER AND SEPARATELY, 'MATERIALS') ARE BEING PROVIDED 'AS IS'. THE MATERIALS MAY CONTAIN KNOWN AND UNKNOWN VIOLATIONS OR DEVIATIONS OF INDUSTRY STANDARDS AND SPECIFICATIONS. NVIDIA MAKES NO WARRANTIES, EXPRESSED, IMPLIED, STATUTORY OR OTHERWISE WITH RESPECT TO THE MATERIALS OR OTHERWISE, AND EXPRESSLY DISCLAIMS ALL IMPLIED WARRANTIES INCLUDING, WITHOUT LIMITATION, THE WARRANTIES OF DESIGN, OF NONINFRINGEMENT, MERCHANTABILITY OR FITNESS FOR A PARTICULAR PURPOSE, OR ARISING FROM A COURSE OF DEALING, TRADE USAGE, TRADE PRACTICE, OR INDUSTRY STANDARDS.

GIGABYTE			
Title: PS:MSVDD OUTPUT CAP (TOP)			
Size: Custom	Document Number: GV-N3080AORUSX W-10GD		Rev: 1.0
Date: Wednesday, September 30, 2020	Sheet 50 of 79		

BLANK

Gigabyte Confidential
Do not Copy

ASSEMBLY <ASSEMBLY_DESCRIPTION>
PAGE DETAIL BLANK

ALL NVIDIA DESIGN SPECIFICATIONS, REFERENCE SPECIFICATIONS, REFERENCE BOARDS, FILES, DRAWINGS, DIAGNOSTICS, LISTS AND OTHER DOCUMENTS OR INFORMATION (TOGETHER AND SEPARATELY, 'MATERIALS') ARE BEING PROVIDED 'AS IS'. THE MATERIALS MAY CONTAIN KNOWN AND UNKNOWN VIOLATIONS OR DEVIATIONS OF INDUSTRY STANDARDS AND SPECIFICATIONS. NVIDIA MAKES NO WARRANTIES, EXPRESSED, IMPLIED, STATUTORY OR OTHERWISE WITH RESPECT TO THE MATERIALS OR OTHERWISE, AND EXPRESSLY DISCLAIMS ALL IMPLIED WARRANTIES INCLUDING, WITHOUT LIMITATION, THE WARRANTIES OF DESIGN, OF NONINFRINGEMENT, MERCHANTABILITY OR FITNESS FOR A PARTICULAR PURPOSE, OR ARISING FROM A COURSE OF DEALING, TRADE USAGE, TRADE PRACTICE, OR INDUSTRY STANDARDS.

GIGABYTE		
Title: BLANK		
Size: Custom	Document Number: GV-N3080AORUSX W-10GD	Rev: 1.0
Date: Wednesday, September 30, 2020	Sheet 51 of 79	

PS: NVVDD Controller_OVR8

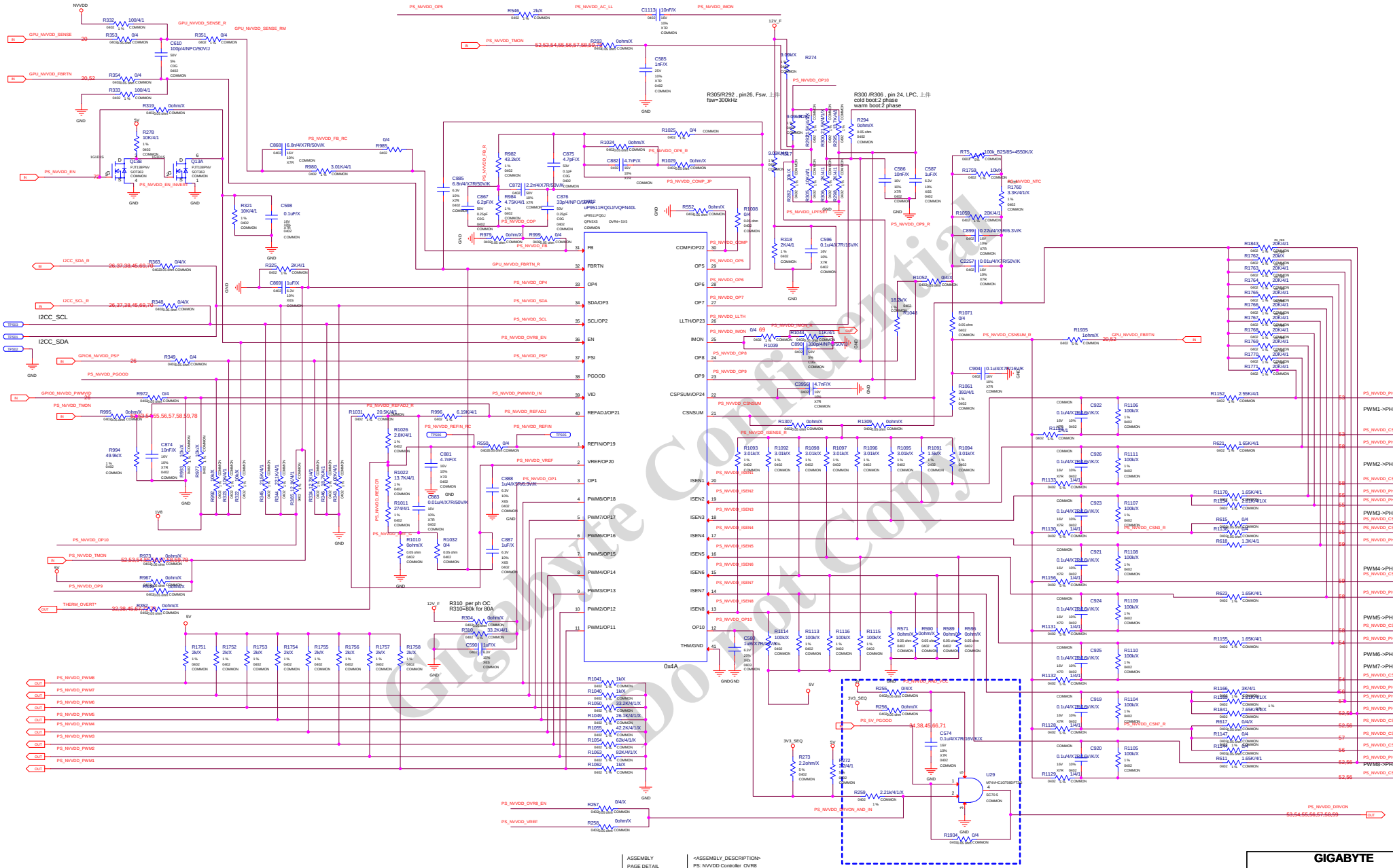

Gigabyte Confidential
Do not Copy

ASSEMBLY	<ASSEMBLY_DESCRIPTION>
PAGE DETAIL	PS: NVVDD Controller_OVR8

ALL NVIDIA DESIGN SPECIFICATIONS, REFERENCE SPECIFICATIONS, REFERENCE BOARDS, FILES, DRAWINGS, DIAGNOSTICS, LISTS AND OTHER DOCUMENTS OR INFORMATION (TOGETHER AND SEPARATELY, 'MATERIALS') ARE BEING PROVIDED 'AS IS'. THE MATERIALS MAY CONTAIN KNOWN AND UNKNOWN VIOLATIONS OR DEVIATIONS OF INDUSTRY STANDARDS AND SPECIFICATIONS. NVIDIA MAKES NO WARRANTIES, EXPRESSED, IMPLIED, STATUTORY OR OTHERWISE WITH RESPECT TO THE MATERIALS OR OTHERWISE, AND EXPRESSLY DISCLAIMS ALL IMPLIED WARRANTIES INCLUDING, WITHOUT LIMITATION, THE WARRANTIES OF DESIGN, OF NONINFRINGEMENT, MERCHANTABILITY OR FITNESS FOR A PARTICULAR PURPOSE, OR ARISING FROM A COURSE OF DEALING, TRADE USAGE, TRADE PRACTICE, OR INDUSTRY STANDARDS.

GIGABYTE

Title	PS: NVVDD Controller_OVR8	
Size: Custom	Document Number: GV-N3080AORUSX W-10GD	Rev: 1.0
Date: Wednesday, September 30, 2020	Sheet 52 of 79	

PS: NVVDD Phase 1

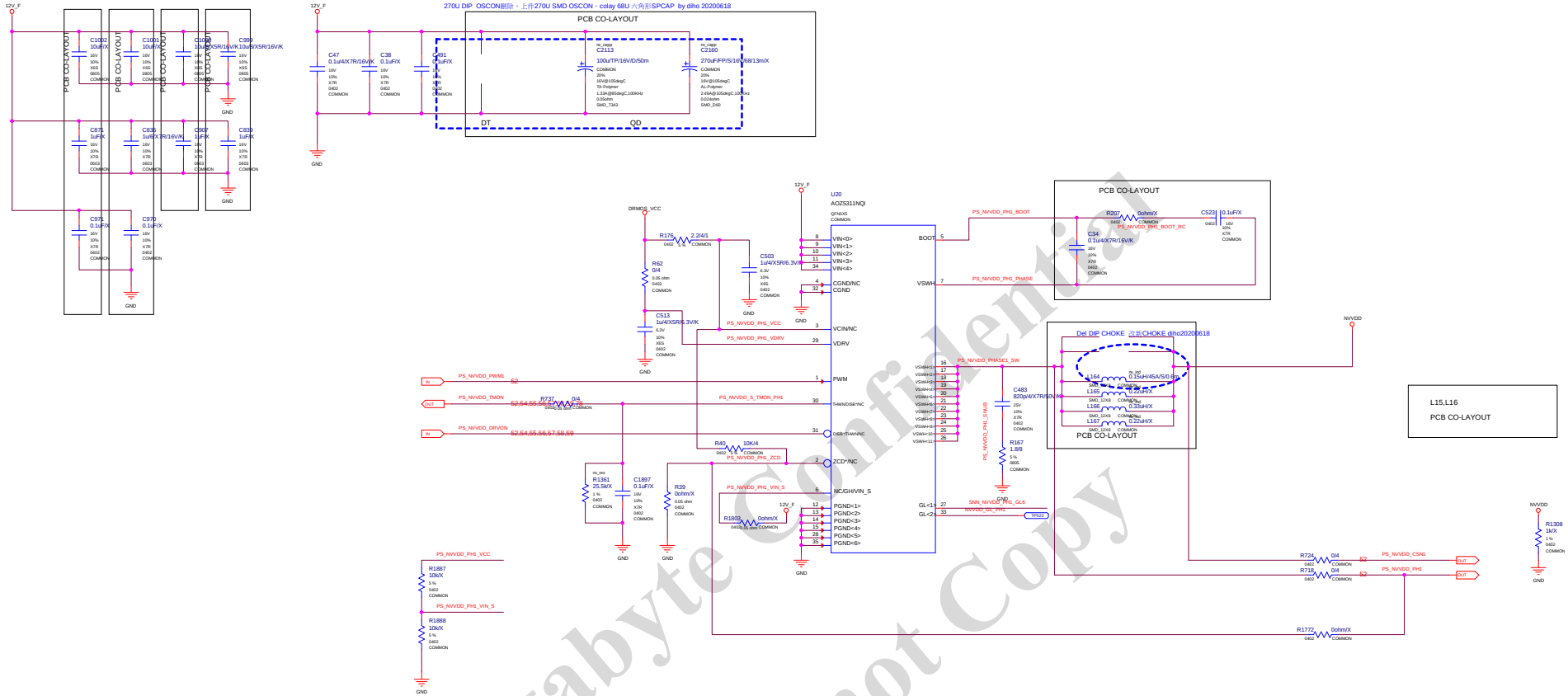

Gigabyte Confidential
Do not Copy

ASSEMBLY	<ASSEMBLY_DESCRIPTION>
PAGE DETAIL	PS: NVVDD PH1 (PWM1)

ALL NVIDIA DESIGN SPECIFICATIONS, REFERENCE SPECIFICATIONS, REFERENCE BOARDS, FILES, DRAWINGS, DIAGNOSTICS, LISTS AND OTHER DOCUMENTS OR INFORMATION (TOGETHER AND SEPARATELY, 'MATERIALS') ARE BEING PROVIDED 'AS IS'. THE MATERIALS MAY CONTAIN KNOWN AND UNKNOWN VIOLATIONS OR DEVIATIONS OF INDUSTRY STANDARDS AND SPECIFICATIONS. NVIDIA MAKES NO WARRANTIES, EXPRESSED, IMPLIED, STATUTORY OR OTHERWISE WITH RESPECT TO THE MATERIALS OR OTHERWISE, AND EXPRESSLY DISCLAIMS ALL IMPLIED WARRANTIES INCLUDING, WITHOUT LIMITATION, THE WARRANTIES OF DESIGN, OF NONINFRINGEMENT, MERCHANTABILITY OR FITNESS FOR A PARTICULAR PURPOSE, OR ARISING FROM A COURSE OF DEALING, TRADE USAGE, TRADE PRACTICE, OR INDUSTRY STANDARDS.

GIGABYTE

Title	PS: NVVDD Phase 1	
Size: Custom	Document Number: GV-N3080AORUSX W-10GD	Rev: 1.0
Date: Wednesday, September 30, 2020	Sheet 53 of 79	

PS: NVVDD Phase 2

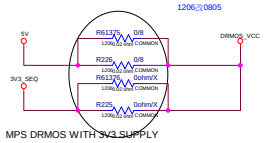

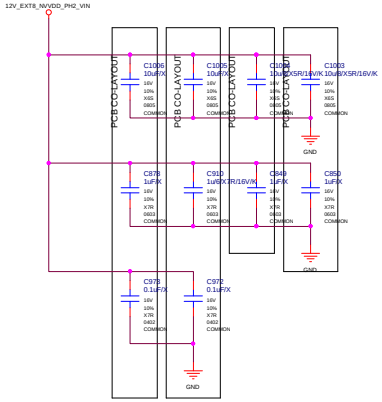

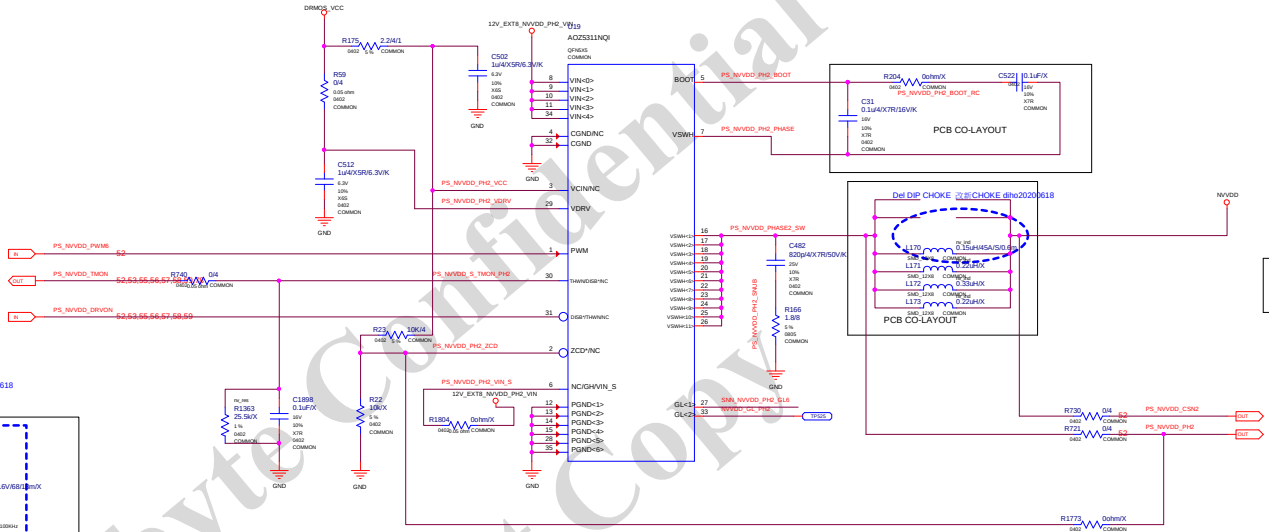

L13,L14

PCB CO-LAYOUT

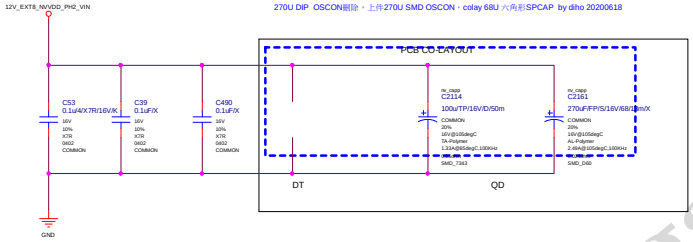

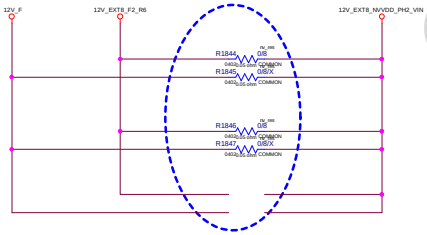

Gigabyte Confidential
Do not Copy

ASSEMBLY	<ASSEMBLY_DESCRIPTION>
PAGE DETAIL	PS: NVVDD PH2(PWM6)

ALL NVIDIA DESIGN SPECIFICATIONS, REFERENCE SPECIFICATIONS, REFERENCE BOARDS, FILES, DRAWINGS, DIAGNOSTICS, LISTS AND OTHER DOCUMENTS OR INFORMATION (TOGETHER AND SEPARATELY, 'MATERIALS') ARE BEING PROVIDED 'AS IS'. THE MATERIALS MAY CONTAIN KNOWN AND UNKNOWN VIOLATIONS OR DEVIATIONS OF INDUSTRY STANDARDS AND SPECIFICATIONS. NVIDIA MAKES NO WARRANTIES, EXPRESSED, IMPLIED, STATUTORY OR OTHERWISE WITH RESPECT TO THE MATERIALS OR OTHERWISE, AND EXPRESSLY DISCLAIMS ANY IMPLIED WARRANTIES INCLUDING, WITHOUT LIMITATION, THE WARRANTIES OF DESIGN, OF NONINFRINGEMENT, MERCHANTABILITY OR FITNESS FOR A PARTICULAR PURPOSE, OR ARISING FROM A COURSE OF DEALING, TRADE USAGE, TRADE PRACTICE, OR INDUSTRY STANDARDS.

GIGABYTE

Title: PS: NVVDD Phase 2

Size	Document Number	Rev
Custom	GV-N3080AORUSX W-10GD	1.0

Date: Wednesday, September 30, 2020 Sheet 54 of 79

PS: NVVDD Phase 3 (PWM6), PHASE 4(PWM2)

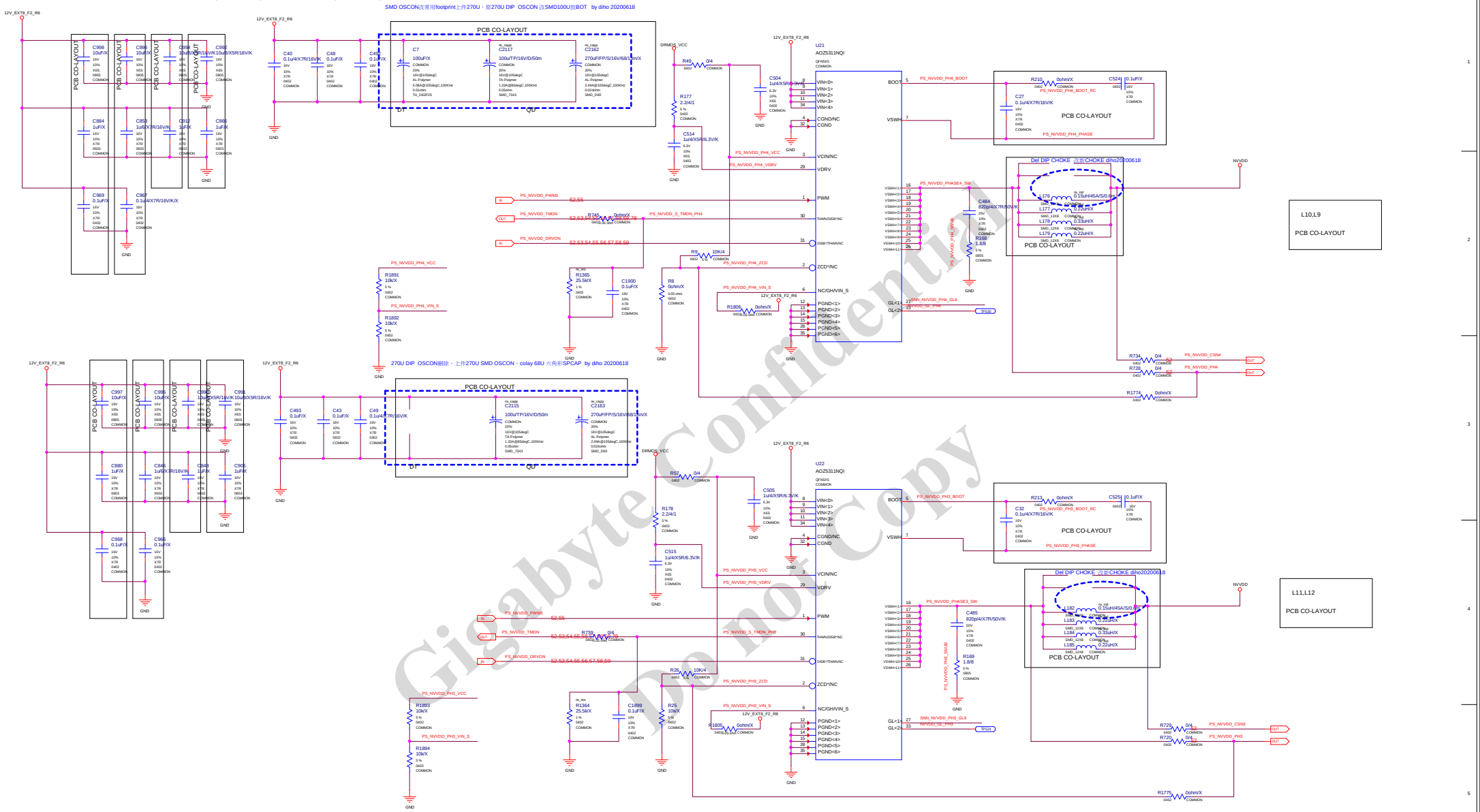

Gisabyte Confidential
Do not Copy

ASSEMBLY
PAGE DETAIL

<ASSEMBLY_DESCRIPTION>
PS: NVVDD PH3 (PWM3) and PH4 (PWM3)

ALL NVIDIA DESIGN SPECIFICATIONS, REFERENCE SPECIFICATIONS, REFERENCE BOARDS, FILES, DRAWINGS, DIAGNOSTICS, LISTS AND OTHER DOCUMENTS OR INFORMATION (TOGETHER AND SEPARATELY, 'MATERIALS') ARE BEING PROVIDED 'AS IS'. THE MATERIALS MAY CONTAIN KNOWN AND UNKNOWN VIOLATIONS OR DEVIATIONS OF INDUSTRY STANDARDS AND SPECIFICATIONS. NVIDIA MAKES NO WARRANTIES, EXPRESSED, IMPLIED, STATUTORY OR OTHERWISE WITH RESPECT TO THE MATERIALS OR OTHERWISE, AND EXPRESSLY DISCLAIMS ALL IMPLIED WARRANTIES INCLUDING, WITHOUT LIMITATION, THE WARRANTIES OF DESIGN, OF NONINFRINGEMENT, MERCHANTABILITY OR FITNESS FOR A PARTICULAR PURPOSE, OR ARISING FROM A COURSE OF DEALING, TRADE USAGE, TRADE PRACTICE, OR INDUSTRY STANDARDS.

Title	PS: NVVDD Phase 3,4
Size	Custom
Document Number	GV-N3080AORUSX W-10GD
Rev	1.0
Date:	Wednesday, September 30, 2020
Sheet	55 of 79

GIGABYTE

PS: NVDD PH 5(PWM2), PH7(PWM3)

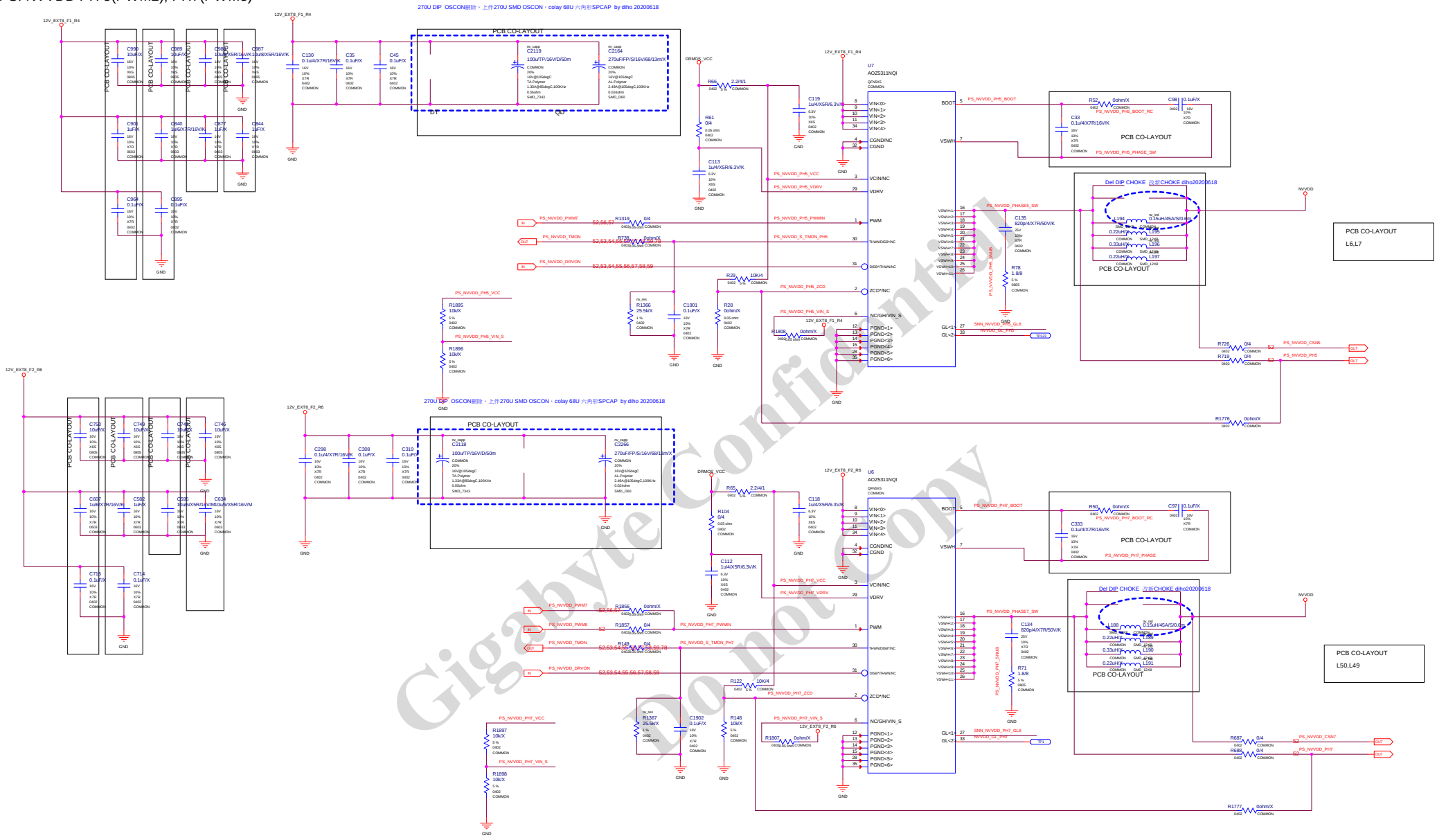

Gigabyte Confidential
Do not Copy

ALL NVIDIA DESIGN SPECIFICATIONS, REFERENCE SPECIFICATIONS, REFERENCE BOARDS, FILES, DRAWINGS, DIAGNOSTICS, LISTS AND OTHER DOCUMENTS OR INFORMATION (TOGETHER AND SEPARATELY, 'MATERIALS') ARE BEING PROVIDED 'AS IS'. THE MATERIALS MAY CONTAIN KNOWN AND UNKNOWN VIOLATIONS OR DEVIATIONS OF INDUSTRY STANDARDS AND SPECIFICATIONS. NVIDIA MAKES NO WARRANTIES, EXPRESSED, IMPLIED, STATUTORY OR OTHERWISE WITH RESPECT TO THE MATERIALS OR OTHERWISE, AND EXPRESSLY DISCLAIMS ALL IMPLIED WARRANTIES INCLUDING, WITHOUT LIMITATION, THE WARRANTIES OF DESIGN, OF NONINFRINGEMENT, MERCHANTABILITY OR FITNESS FOR A PARTICULAR PURPOSE, OR ARISING FROM A COURSE OF DEALING, TRADE USAGE, TRADE PRACTICE, OR INDUSTRY STANDARDS.

ASSEMBLY	<ASSEMBLY_DESCRIPTION>
PAGE DETAIL	PS: NVVDD PH5(PWM7) and PH7(PWM8)

GIGABYTE

Title	PS: NVVDD Phase 5,7	
Size: Custom	Document Number: GV-N3080AORUSX W-10GD	Rev: 1.0
Date: Wednesday, September 30, 2020	Sheet 56 of 79	

PS: NVVDD Phase 6(PWM7)

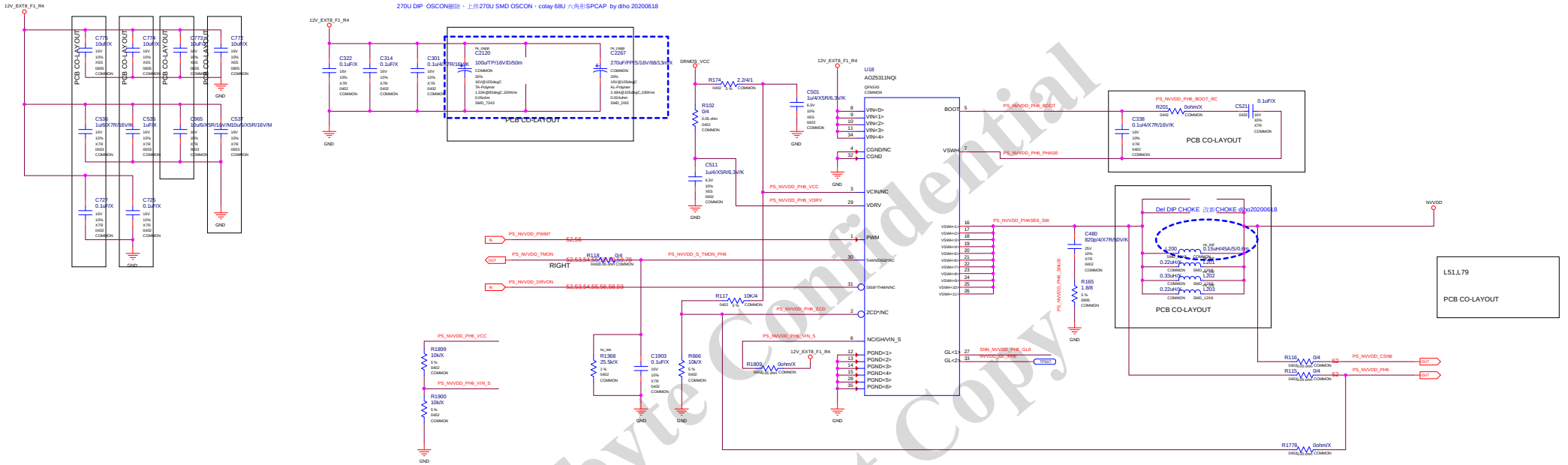

Gigabyte Confidential
Do not Copy

ASSEMBLY <ASSEMBLY_DESCRIPTION>
PAGE DETAIL PS: NVVDD PH6 (PWM7)

ALL NVIDIA DESIGN SPECIFICATIONS, REFERENCE SPECIFICATIONS, REFERENCE BOARDS, FILES, DRAWINGS, DIAGNOSTICS, LISTS AND OTHER DOCUMENTS OR INFORMATION (TOGETHER AND SEPARATELY, 'MATERIALS') ARE BEING PROVIDED 'AS IS'. THE MATERIALS MAY CONTAIN KNOWN AND UNKNOWN VIOLATIONS OR DEVIATIONS OF INDUSTRY STANDARDS AND SPECIFICATIONS. NVIDIA MAKES NO WARRANTIES, EXPRESSED, IMPLIED, STATUTORY OR OTHERWISE WITH RESPECT TO THE MATERIALS OR OTHERWISE, AND EXPRESSLY DISCLAIMS ALL IMPLIED WARRANTIES INCLUDING, WITHOUT LIMITATION, THE WARRANTIES OF DESIGN, OF NONINFRINGEMENT, MERCHANTABILITY OR FITNESS FOR A PARTICULAR PURPOSE, OR ARISING FROM A COURSE OF DEALING, TRADE USAGE, TRADE PRACTICE, OR INDUSTRY STANDARDS.

GIGABYTE			
Title: PS: NVVDD Phase6			
Size: Custom	Document Number: GV-N3080AORUSX W-10GD		Rev: 1.0
Date: Wednesday, September 30, 2020	Sheet 57 of 79		

PS: NVVDD PH 8 (PWM5), PH 9(PWM8)

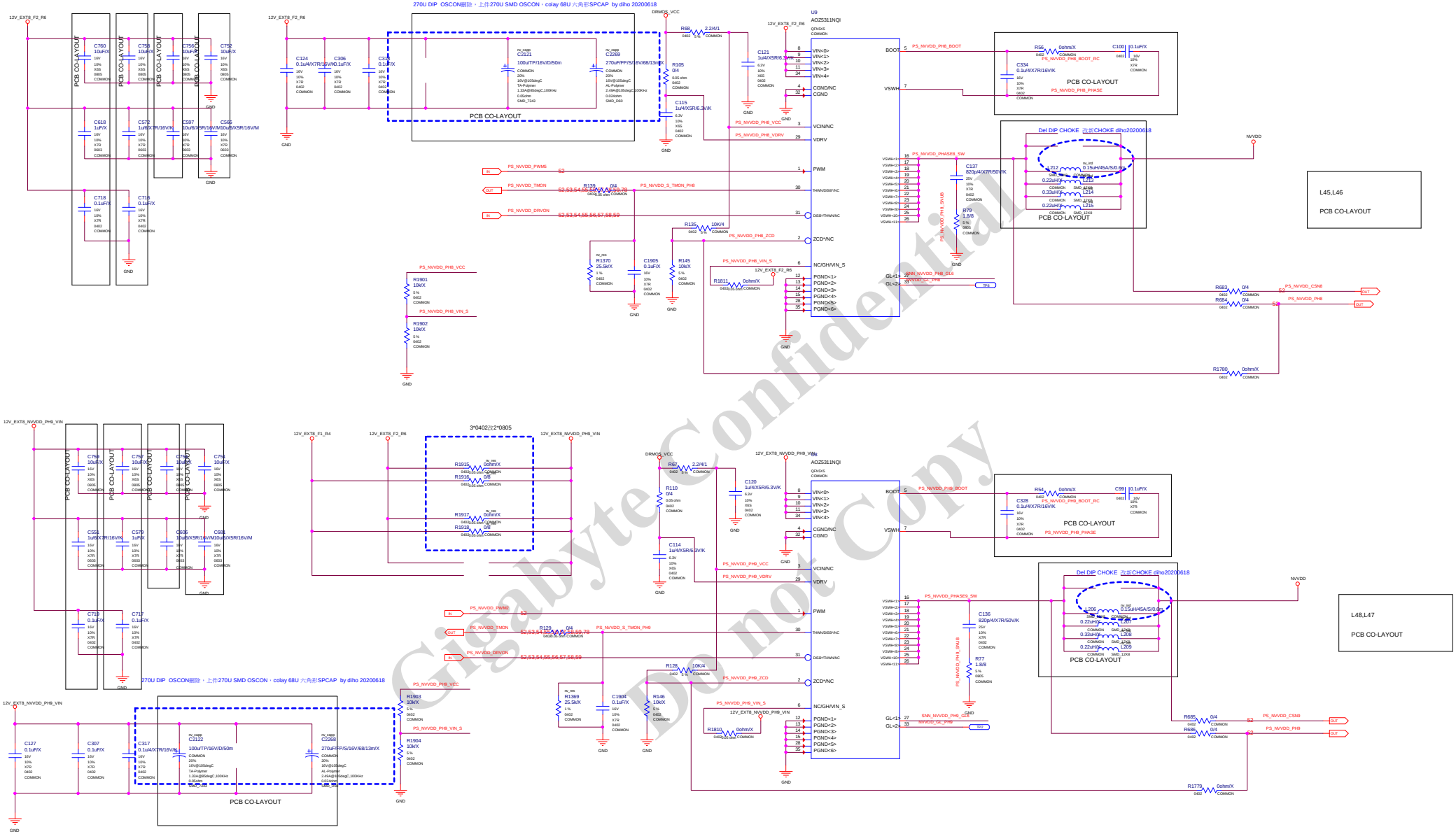

Gigabyte Confidential
Do not Copy

ALL NVIDIA DESIGN SPECIFICATIONS, REFERENCE SPECIFICATIONS, REFERENCE BOARDS, FILES, DRAWINGS, DIAGNOSTICS, LISTS AND OTHER DOCUMENTS OR INFORMATION (TOGETHER AND SEPARATELY, 'MATERIALS') ARE BEING PROVIDED 'AS IS'. THE MATERIALS MAY CONTAIN KNOWN AND UNKNOWN VIOLATIONS OR DEVIATIONS OF INDUSTRY STANDARDS AND SPECIFICATIONS. NVIDIA MAKES NO WARRANTIES, EXPRESSED, IMPLIED, STATUTORY OR OTHERWISE WITH RESPECT TO THE MATERIALS OR OTHERWISE, AND EXPRESSLY DISCLAIMS ANY IMPLIED WARRANTIES INCLUDING, WITHOUT LIMITATION, THE WARRANTIES OF DESIGN, OF NONINFRINGEMENT, MERCHANTABILITY OR FITNESS FOR A PARTICULAR PURPOSE, OR ARISING FROM A COURSE OF DEALING, TRADE USAGE, TRADE PRACTICE, OR INDUSTRY STANDARDS.

ASSEMBLY	<ASSEMBLY_DESCRIPTION>
PAGE DETAIL	PS: NVVDD PH8(PWM5) and PH9(PWM2)

GIGABYTE

Title: PS: NVVDD Phase8

Size	Document Number	Rev
Custom	GV-N3080AORUSX W-10GD	1.0

Date: Wednesday, September 30, 2020 Sheet 58 of 79

PS: NVVDD Phase 10 (PWM8)

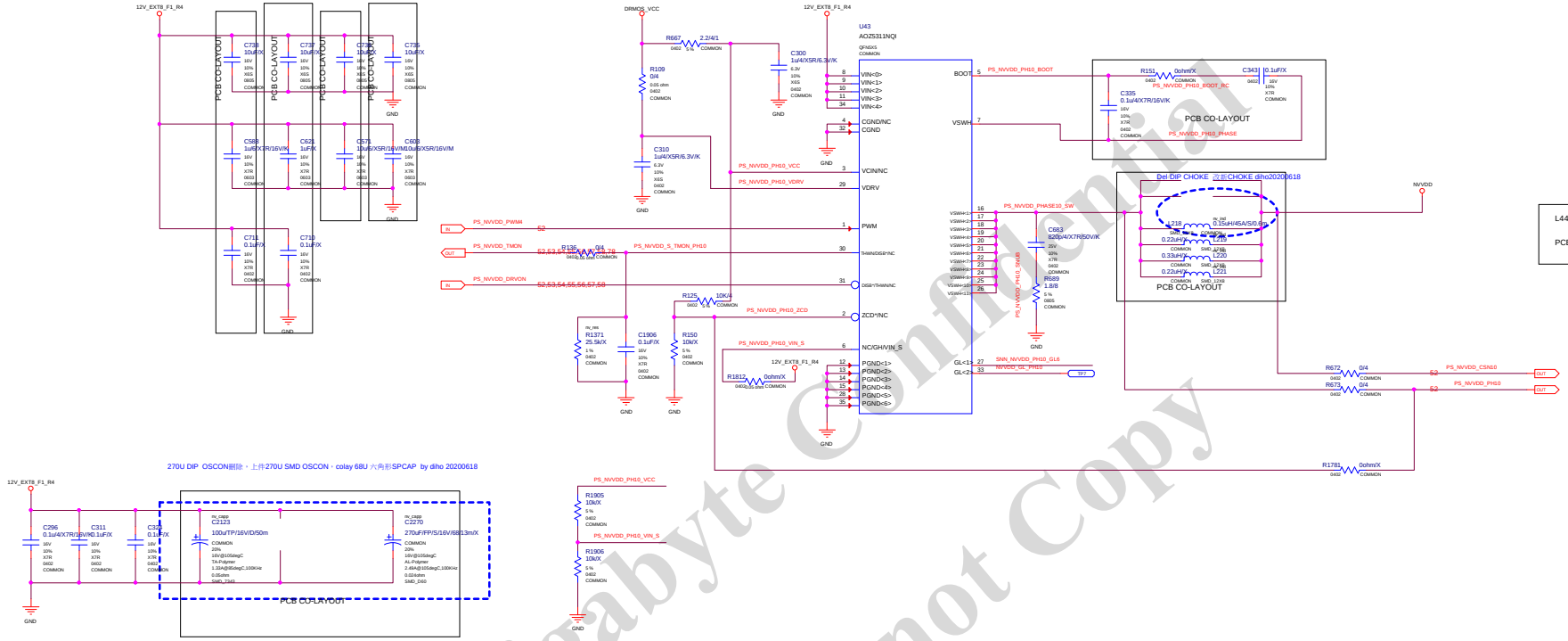

Gigabyte Confidential
Do not Copy

ASSEMBLY	<ASSEMBLY_DESCRIPTION>
PAGE DETAIL	PS: NVVDD PH10 (PWM4)

ALL NVIDIA DESIGN SPECIFICATIONS, REFERENCE SPECIFICATIONS, REFERENCE BOARDS, FILES, DRAWINGS, DIAGNOSTICS, LISTS AND OTHER DOCUMENTS OR INFORMATION (TOGETHER AND SEPARATELY, 'MATERIALS') ARE BEING PROVIDED 'AS IS'. THE MATERIALS MAY CONTAIN KNOWN AND UNKNOWN VIOLATIONS OR DEVIATIONS OF INDUSTRY STANDARDS AND SPECIFICATIONS. NVIDIA MAKES NO WARRANTIES, EXPRESSED, IMPLIED, STATUTORY OR OTHERWISE WITH RESPECT TO THE MATERIALS OR OTHERWISE, AND EXPRESSLY DISCLAIMS ALL IMPLIED WARRANTIES INCLUDING, WITHOUT LIMITATION, THE WARRANTIES OF DESIGN, OF NONINFRINGEMENT, MERCHANTABILITY OR FITNESS FOR A PARTICULAR PURPOSE, OR ARISING FROM A COURSE OF DEALING, TRADE USAGE, TRADE PRACTICE, OR INDUSTRY STANDARDS.

GIGABYTE

Title: PS: NVVDD Phase10

Size	Document Number	Rev
Custom	GV-N3080AORUSX W-10GD	1.0

Date: Wednesday, September 30, 2020 Sheet 59 of 79

PCB CO-LAYOUT

C131, C132, C133, C140, C141, C142, C2106, C2107, C2133, C2134, C2135, C2137, C264, C265, C266, C267, C61, C64, C65, C66, C67, C68, C69, C77, C80, C83, C88

PCB CO-LAYOUT

C103, C105, C106, C107, C108, C110, C1208, C125, C1254, C1256, C1267, C128, C144, C145, C146, C151, C152, C153, C154, C159, C160, C161, C162, C170, C173, C2092, C2100, C2101, C2102, C2103, C2104, C2138, C2139, C2140, C2141, C2142, C2143, C2144, C2272, C230, C231, C232, C233, C243, C245, C246, C248, C253, C254, C255, C256, C270, C274, C275, C276, C283, C289, C290, C291, C60202, C62004, C62005

C163, C164, C166, C167, C2087, C2105, C2109, C2110, C2111, C224, C225, C261, C268, C269, C60354, C61428, C62, C63, C89, C91, C96

PCB CO-LAYOUT

Gigabyte Confidential
Do not Copy

ASSEMBLY <ASSEMBLY_DESCRIPTION>
PAGE DETAIL Colayout_Notes

ALL NVIDIA DESIGN SPECIFICATIONS, REFERENCE SPECIFICATIONS, REFERENCE BOARDS, FILES, DRAWINGS, DIAGNOSTICS, LISTS AND OTHER DOCUMENTS OR INFORMATION (TOGETHER AND SEPARATELY, 'MATERIALS') ARE BEING PROVIDED 'AS IS'. THE MATERIALS MAY CONTAIN KNOWN AND UNKNOWN VIOLATIONS OR DEVIATIONS OF INDUSTRY STANDARDS AND SPECIFICATIONS. NVIDIA MAKES NO WARRANTIES, EXPRESSED, IMPLIED, STATUTORY OR OTHERWISE WITH RESPECT TO THE MATERIALS OR OTHERWISE, AND EXPRESSLY DISCLAIMS ALL IMPLIED WARRANTIES INCLUDING, WITHOUT LIMITATION, THE WARRANTIES OF DESIGN, OF NONINFRINGEMENT, MERCHANTABILITY OR FITNESS FOR A PARTICULAR PURPOSE, OR ARISING FROM A COURSE OF DEALING, TRADE USAGE, TRADE PRACTICE, OR INDUSTRY STANDARDS.

GIGABYTE		
Title: COLAY NOTE		
Size: Custom	Document Number: GV-N3080AORUSX W-10GD	Rev: 1.0
Date: Wednesday, September 30, 2020	Sheet 60 of 79	

BLANK

Gigabyte Confidential
Do not Copy

ASSEMBLY <ASSEMBLY_DESCRIPTION>
PAGE DETAIL BLANK

ALL NVIDIA DESIGN SPECIFICATIONS, REFERENCE SPECIFICATIONS, REFERENCE BOARDS, FILES, DRAWINGS, DIAGNOSTICS, LISTS AND OTHER DOCUMENTS OR INFORMATION (TOGETHER AND SEPARATELY, 'MATERIALS') ARE BEING PROVIDED 'AS IS'. THE MATERIALS MAY CONTAIN KNOWN AND UNKNOWN VIOLATIONS OR DEVIATIONS OF INDUSTRY STANDARDS AND SPECIFICATIONS. NVIDIA MAKES NO WARRANTIES, EXPRESSED, IMPLIED, STATUTORY OR OTHERWISE WITH RESPECT TO THE MATERIALS OR OTHERWISE, AND EXPRESSLY DISCLAIMS ALL IMPLIED WARRANTIES INCLUDING, WITHOUT LIMITATION, THE WARRANTIES OF DESIGN, OF NONINFRINGEMENT, MERCHANTABILITY OR FITNESS FOR A PARTICULAR PURPOSE, OR ARISING FROM A COURSE OF DEALING, TRADE USAGE, TRADE PRACTICE, OR INDUSTRY STANDARDS.

GIGABYTE		
Title: BLANK		
Size: Custom	Document Number: GV-N3080AORUSX W-10GD	Rev: 1.0
Date: Wednesday, September 30, 2020	Sheet 61 of 76	

PS: NVVDD OUTPUT CAP(TOP)

820U DIP OSCON 改330U 預留在BOT，原SMD OSCON改常用footprint上件820U by diho 20200619

NVVDD PH4

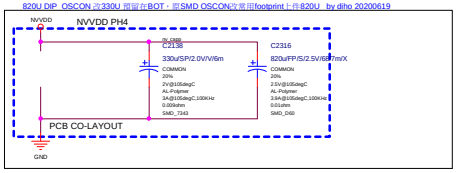

NVVDD PH1

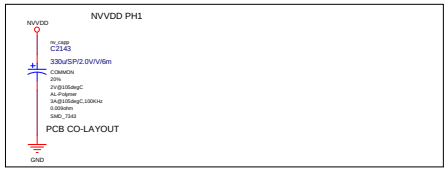

NVVDD PH4 ASIDE

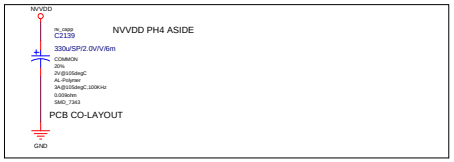

NVVDD PH1 ASIDE

REMOVE

820U DIP OSCON 改330U 預留在BOT，原SMD OSCON改常用footprint上件820U by diho 20200619

NVVDD PH3

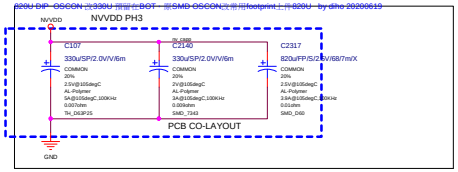

820U DIP OSCON 改330U 預留在BOT，原SMD OSCON改常用footprint上件820U by diho 20200619

NVVDD PH3 ASIDE

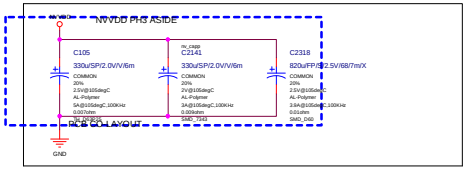

820U DIP OSCON 改330U 預留在BOT，原SMD OSCON改常用footprint上件820U by diho 20200619

NVVDD PH2

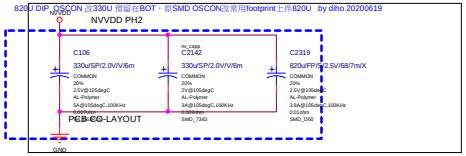

PCB CO-LAYOUT

NVVDD PH5

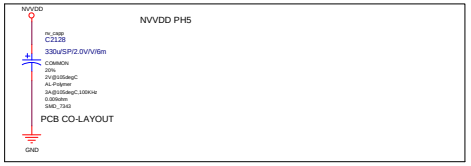

820U DIP OSCON 改330U 預留在BOT，原SMD OSCON改常用footprint上件820U by diho 20200619

NVVDD PH6

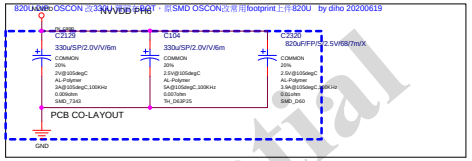

820U DIP OSCON 改330U 預留在BOT，原SMD OSCON改常用footprint上件820U by diho 20200619

NVVDD PH7

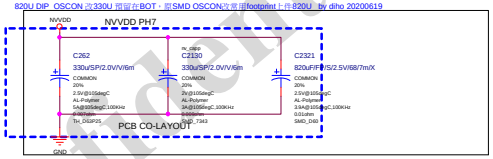

NVVDD PH7

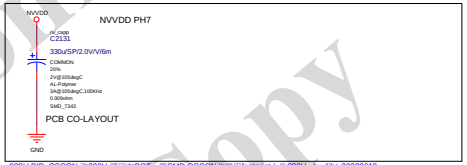

820U DIP OSCON 改330U 預留在BOT，原SMD OSCON改常用footprint上件820U by diho 20200619

NVVDD PH8

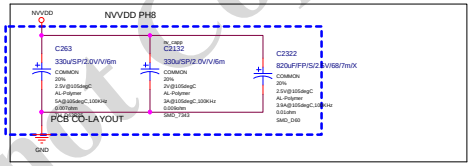

PCB CO-LAYOUT

820U DIP OSCON 改330U 預留在BOT，原SMD OSCON改常用footprint上件820U by diho 20200619

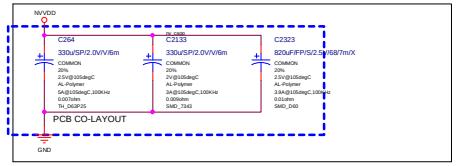

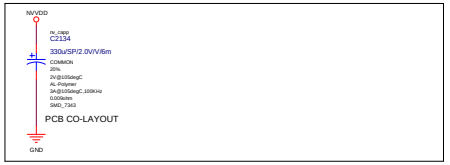

820U DIP OSCON 改330U 預留在BOT，原SMD OSCON改常用footprint上件820U by diho 20200619

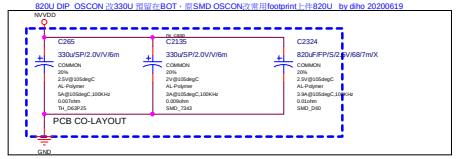

820U DIP OSCON 改330U 預留在BOT，原SMD OSCON改常用footprint上件820U by diho 20200619

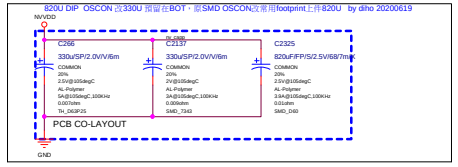

PCB CO-LAYOUT

Gigabyte Confidential
Do not copy

ASSEMBLY	<ASSEMBLY_DESCRIPTION>
PAGE DETAIL	PS: NVVDD OUTPUT CAP(TOP)

ALL NVIDIA DESIGN SPECIFICATIONS, REFERENCE SPECIFICATIONS, REFERENCE BOARDS, FILES, DRAWINGS, DIAGNOSTICS, LISTS AND OTHER DOCUMENTS OR INFORMATION (TOGETHER AND SEPARATELY, 'MATERIALS') ARE BEING PROVIDED 'AS IS'. THE MATERIALS MAY CONTAIN KNOWN AND UNKNOWN VIOLATIONS OR DEVIATIONS OF INDUSTRY STANDARDS AND SPECIFICATIONS. NVIDIA MAKES NO WARRANTIES, EXPRESSED, IMPLIED, STATUTORY OR OTHERWISE WITH RESPECT TO THE MATERIALS OR OTHERWISE, AND EXPRESSLY DISCLAIMS ANY IMPLIED WARRANTIES INCLUDING, WITHOUT LIMITATION, THE WARRANTIES OF DESIGN, OF NONINFRINGEMENT, MERCHANTABILITY OR FITNESS FOR A PARTICULAR PURPOSE, OR ARISING FROM A COURSE OF DEALING, TRADE USAGE, TRADE PRACTICE, OR INDUSTRY STANDARDS.

GIGABYTE			
Title: PS: NVVDD OUTPUT CAP(TOP)			
Size: Custom	Document Number: GV-N3080AORUSX W-10GD		Rev: 1.0
Date: Wednesday, September 30, 2020	Sheet 62 of 79		

Page63: MCU

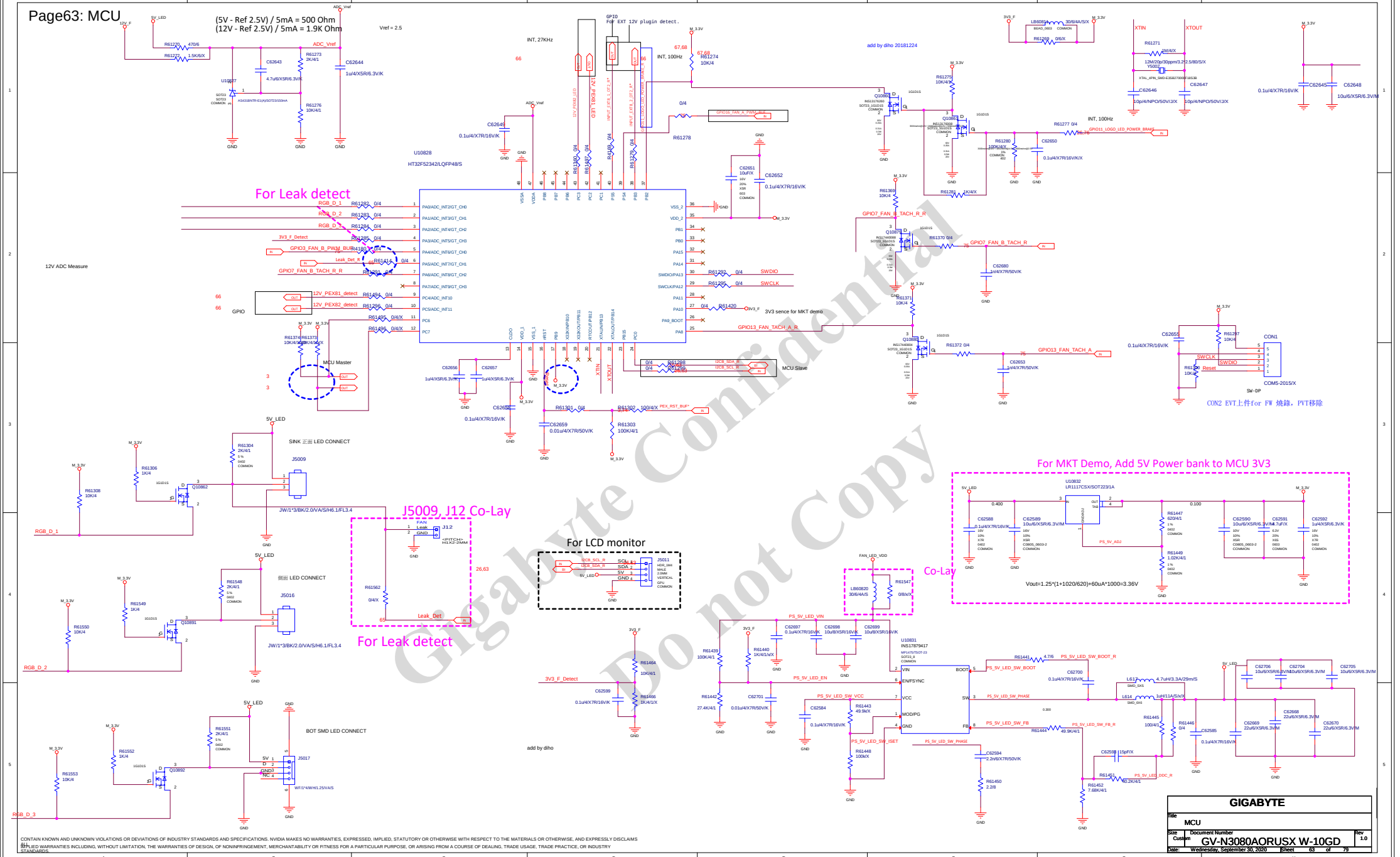

CONTAIN KNOWN AND UNKNOWN VIOLATIONS OR DEVIATIONS OF INDUSTRY STANDARDS AND SPECIFICATIONS. NVIDIA MAKES NO WARRANTIES, EXPRESSED, IMPLIED, STATUTORY OR OTHERWISE WITH RESPECT TO THE MATERIALS OR OTHERWISE, AND EXPRESSLY DISCLAIMS ANY IMPLIED WARRANTIES INCLUDING, WITHOUT LIMITATION, THE WARRANTIES OF DESIGN, OF NONINFRINGEMENT, MERCHANTABILITY OR FITNESS FOR A PARTICULAR PURPOSE, OR ARISING FROM A COURSE OF DEALING, TRADE USAGE, TRADE PRACTICE, OR INDUSTRY STANDARDS.

GIGABYTE			
Title: MCU			
Size: Custom	Document Number: GV-N3080AORUSX W-10GD		Rev: 1.0
Date: Wednesday, September 30, 2020	Sheet 63 of 79		

PS: INPUT SWITCH RTD3

AND GATE LOGIC FOR P-BOARD

GPIO1	GPIO23	SWITCH	VOUT
0	0	0	12V_F
0	1	0	12V_F
1	0	0	12V_F
1	1	1	3V3A

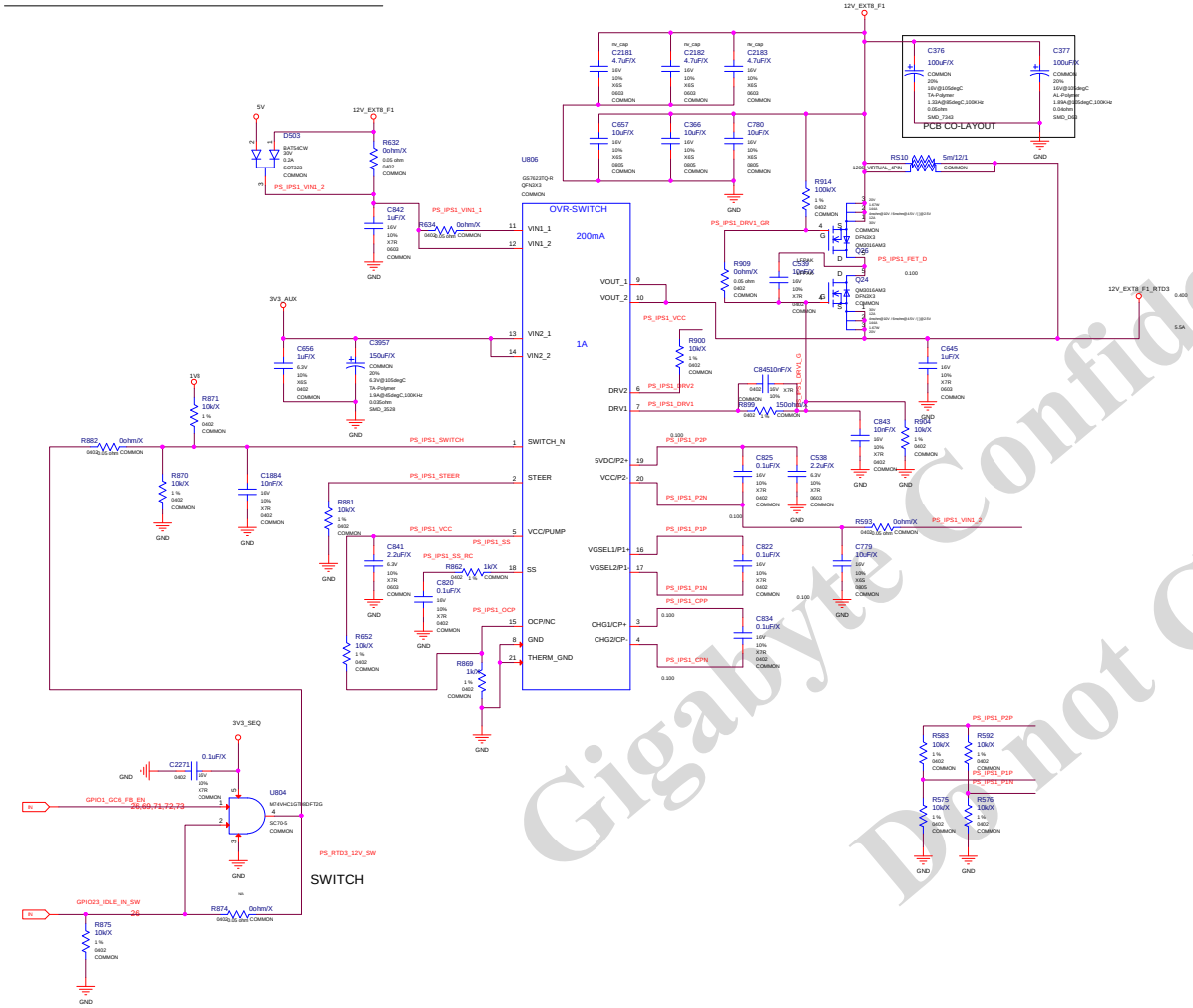

Gigabyte Confidential
Do not Copy

ALL NVIDIA DESIGN SPECIFICATIONS, REFERENCE SPECIFICATIONS, REFERENCE BOARDS, FILES, DRAWINGS, DIAGNOSTICS, LISTS AND OTHER DOCUMENTS OR INFORMATION (TOGETHER AND SEPARATELY, 'MATERIALS') ARE BEING PROVIDED 'AS IS'. THE MATERIALS MAY CONTAIN KNOWN AND UNKNOWN VIOLATIONS OR DEVIATIONS OF INDUSTRY STANDARDS AND SPECIFICATIONS. NVIDIA MAKES NO WARRANTIES, EXPRESSED, IMPLIED, STATUTORY OR OTHERWISE WITH RESPECT TO THE MATERIALS OR OTHERWISE, AND EXPRESSLY DISCLAIMS ALL IMPLIED WARRANTIES INCLUDING, WITHOUT LIMITATION, THE WARRANTIES OF DESIGN, OF NONINFRINGEMENT, MERCHANTABILITY OR FITNESS FOR A PARTICULAR PURPOSE, OR ARISING FROM A COURSE OF DEALING, TRADE USAGE, TRADE PRACTICE, OR INDUSTRY STANDARDS.

ASSEMBLY
PAGE DETAIL

<ASSEMBLY_DESCRIPTION>
PS: INPUT SWITCH RTD3

	GIGABYTE	
Title	PS: INPUT SWITCH RTD3	
Size: Custom	Document Number: GV-N3080AORUSX W-10GD	Rev: 1.0
Date: Wednesday, September 30, 2020	Sheet 64 of 79	

0805 COLAY 0603 diho 2018.12.02

For Leak detect

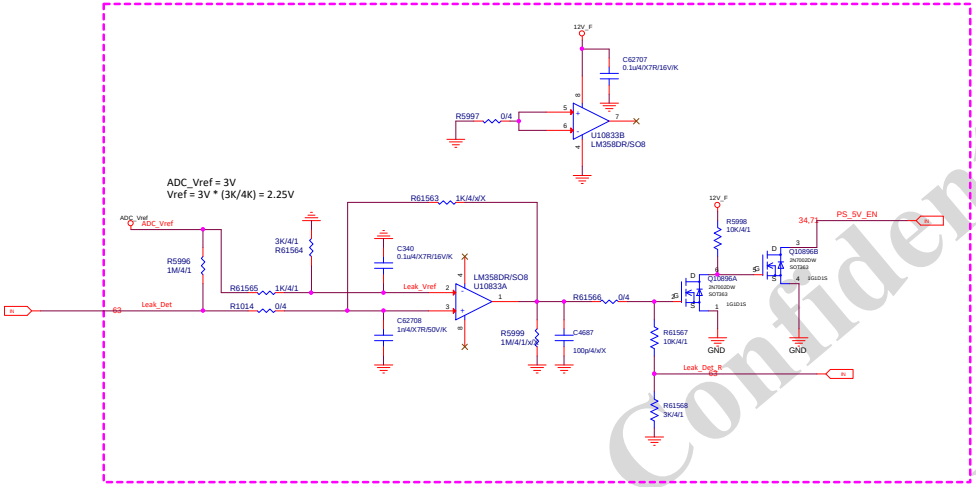

Gigabyte Confidential
Do not Copy

ASSEMBLY | <ASSEMBLY_DESCRIPTION>
PAGE DETAIL | BLANK

ALL NVIDIA DESIGN SPECIFICATIONS, REFERENCE SPECIFICATIONS, REFERENCE BOARDS, FILES, DRAWINGS, DIAGNOSTICS, LISTS AND OTHER DOCUMENTS OR INFORMATION (TOGETHER AND SEPARATELY, 'MATERIALS') ARE BEING PROVIDED 'AS IS'. THE MATERIALS MAY CONTAIN KNOWN AND UNKNOWN VIOLATIONS OR DEVIATIONS OF INDUSTRY STANDARDS AND SPECIFICATIONS. NVIDIA MAKES NO WARRANTIES, EXPRESSED, IMPLIED, STATUTORY OR OTHERWISE WITH RESPECT TO THE MATERIALS OR OTHERWISE, AND EXPRESSLY DISCLAIMS ALL IMPLIED WARRANTIES INCLUDING, WITHOUT LIMITATION, THE WARRANTIES OF DESIGN, OF NONINFRINGEMENT, MERCHANTABILITY OR FITNESS FOR A PARTICULAR PURPOSE, OR ARISING FROM A COURSE OF DEALING, TRADE USAGE, TRADE PRACTICE, OR INDUSTRY STANDARDS.

GIGABYTE		
Title: LED		
Size: Custom	Document Number: GV-N3080AORUSX W-10GD	Rev: 1.0
Date: Wednesday, September 30, 2020	Sheet 65 of 79	

PS: Inputs, Filtering, and Monitoring

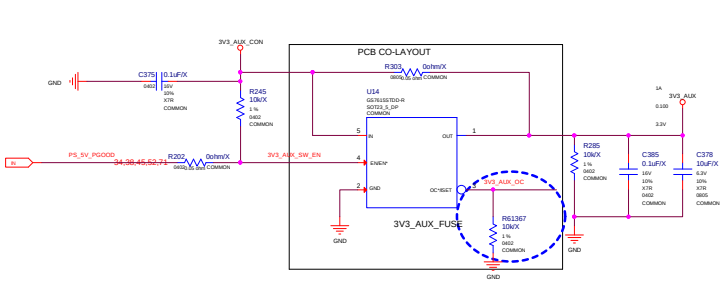

PEX 3V3 INPUT - 10W

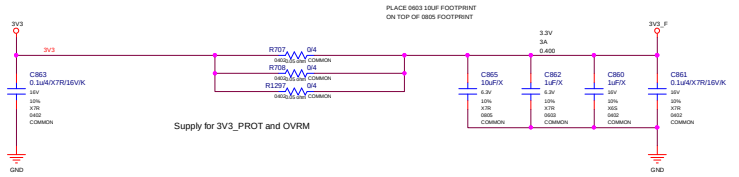

PEX_12V INPUT - 66W

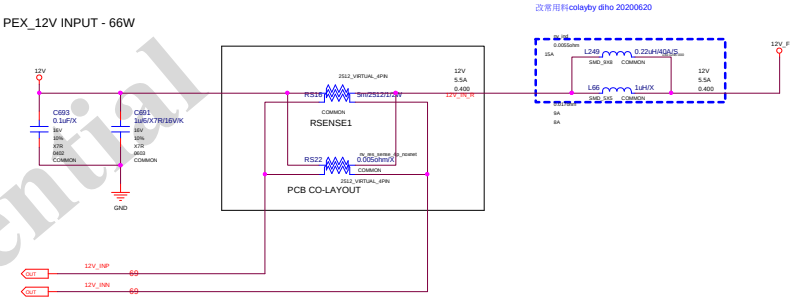

PEX8 INPUT 1 - 2x4 PCIE CON 150W

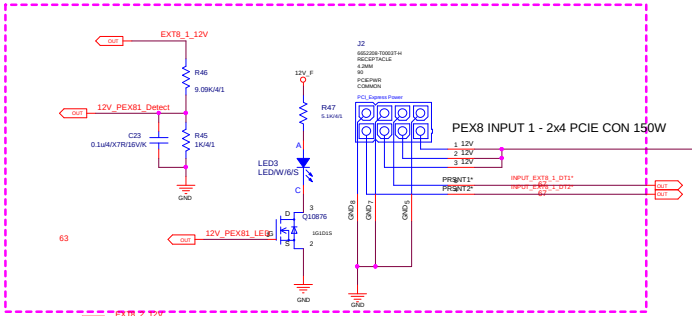

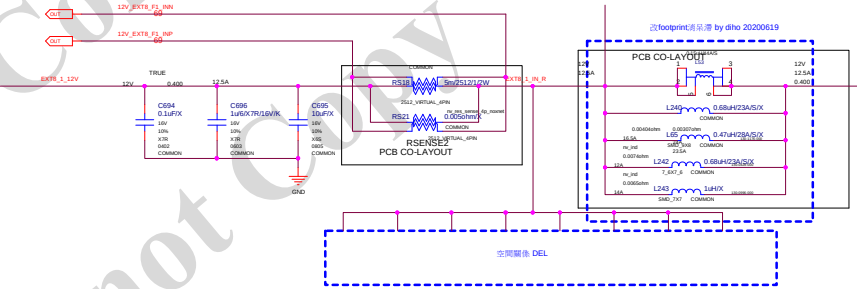

PEX8 INPUT 2 - 2x4 PCIE CON 150W

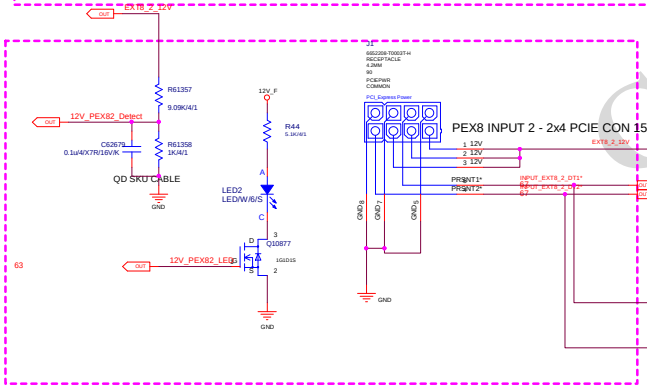

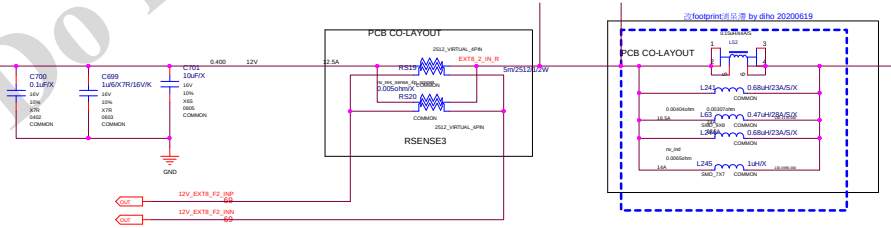

J24,J25,J26,J27

ASSEMBLY	<ASSEMBLY_DESCRIPTION>
PAGE DETAIL	PS: INPUTS, FILTERING, and, MONITORING

ALL NVIDIA DESIGN SPECIFICATIONS, REFERENCE SPECIFICATIONS, REFERENCE BOARDS, FILES, DRAWINGS, DIAGNOSTICS, LISTS AND OTHER DOCUMENTS OR INFORMATION (TOGETHER AND SEPARATELY, 'MATERIALS') ARE BEING PROVIDED 'AS IS'. THE MATERIALS MAY CONTAIN KNOWN AND UNKNOWN VIOLATIONS OR DEVIATIONS OF INDUSTRY STANDARDS AND SPECIFICATIONS. NVIDIA MAKES NO WARRANTIES, EXPRESSED, IMPLIED, STATUTORY OR OTHERWISE WITH RESPECT TO THE MATERIALS OR OTHERWISE, AND EXPRESSLY DISCLAIMS ALL IMPLIED WARRANTIES INCLUDING, WITHOUT LIMITATION, THE WARRANTIES OF DESIGN, OF NONINFRINGEMENT, MERCHANTABILITY OR FITNESS FOR A PARTICULAR PURPOSE, OR ARISING FROM A COURSE OF DEALING, TRADE USAGE, TRADE PRACTICE, OR INDUSTRY STANDARDS.

Gigabyte Confidential
Do not Copy

GIGABYTE

Title	PS: Inputs, Filtering, and Monitoring	
Size: Custom	Document Number: GV-N3080AORUSX W-10GD	Rev: 1.0
Date: Wednesday, September 30, 2020	Sheet 66 of 79	

PS: 12V Current Steering & Hot Unplug Detect

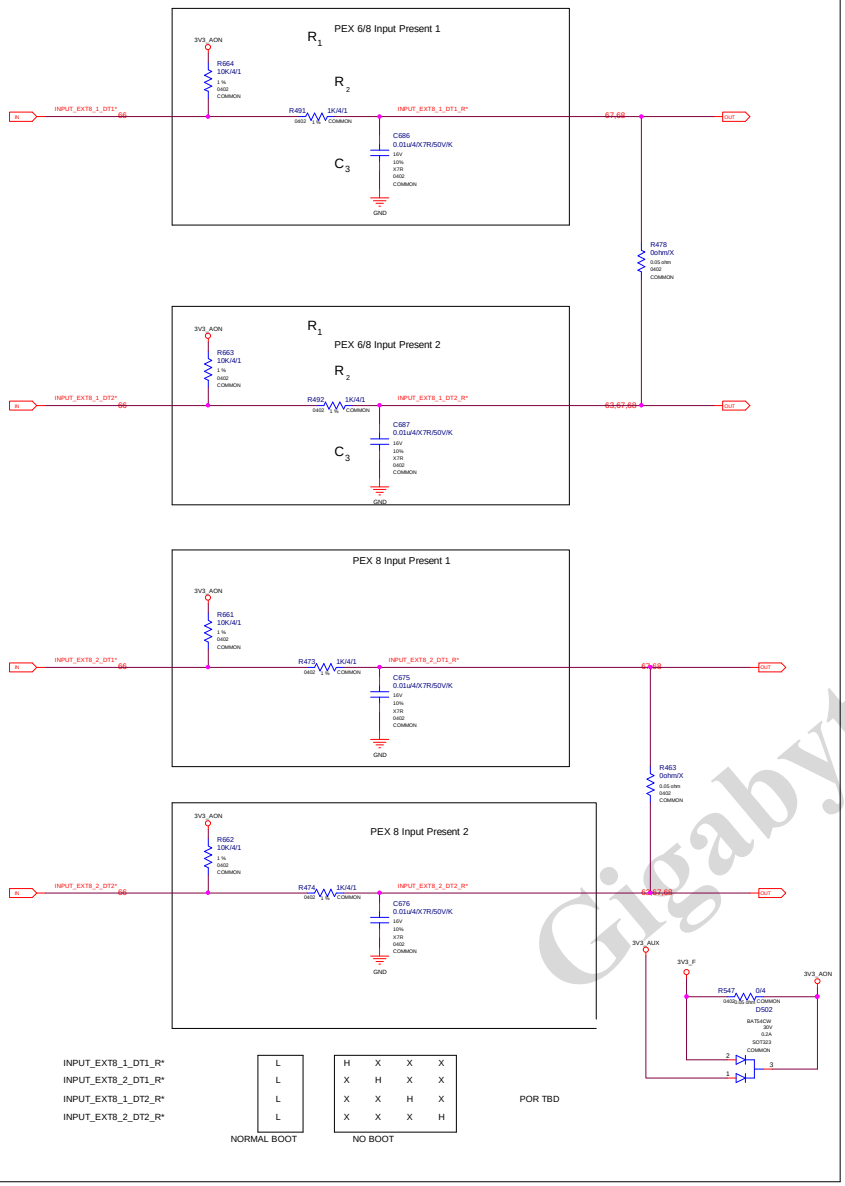

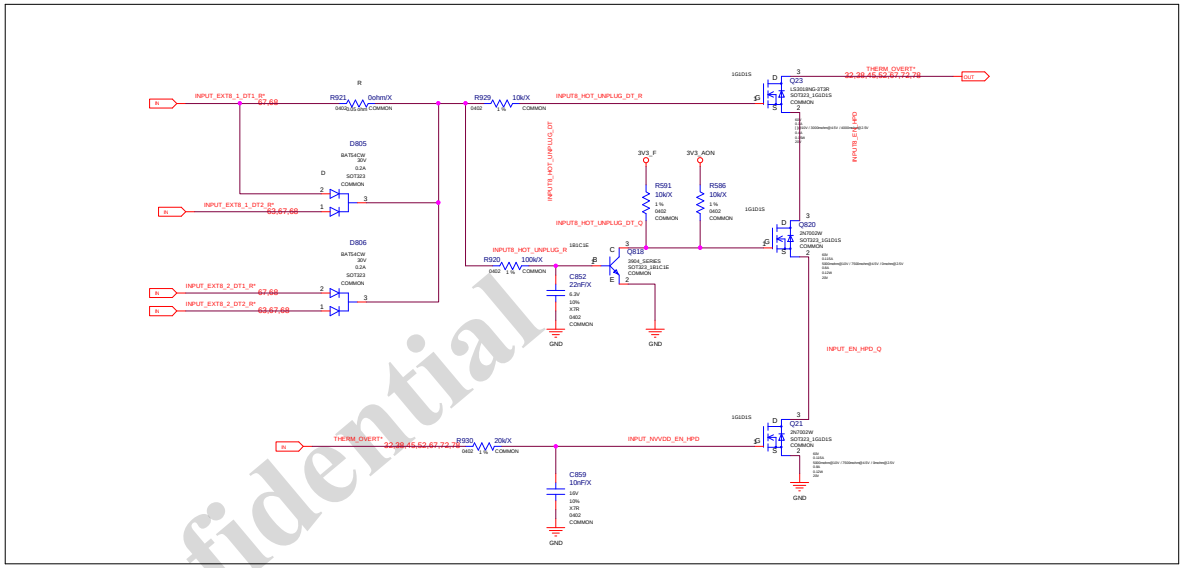

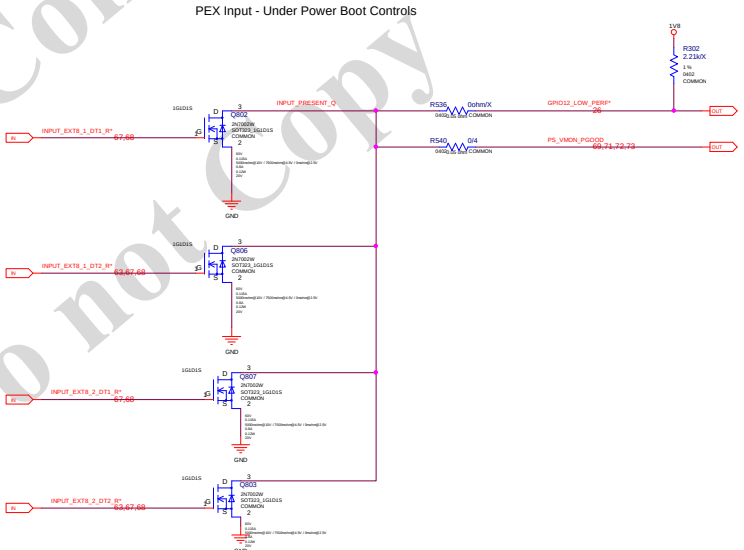

GPIO12_LOW_PERF*	GPU SPEED
0	Slow
1	Normal

A 2 x 4 auxiliary power connector plug from the power supply unit must not use the 75 W sense coding (Sense1=Open and Sense0=Ground) to avoid end-user confusion.

Gigabyte Confidential
Do not Copy

ASSEMBLY <ASSEMBLY_DESCRIPTION>
PAGE DETAIL PS: HOT UNPLUG

ALL NVIDIA DESIGN SPECIFICATIONS, REFERENCE SPECIFICATIONS, REFERENCE BOARDS, FILES, DRAWINGS, DIAGNOSTICS, LISTS AND OTHER DOCUMENTS OR INFORMATION (TOGETHER AND SEPARATELY, 'MATERIALS') ARE BEING PROVIDED 'AS IS'. THE MATERIALS MAY CONTAIN KNOWN AND UNKNOWN VIOLATIONS OR DEVIATIONS OF INDUSTRY STANDARDS AND SPECIFICATIONS. NVIDIA MAKES NO WARRANTIES, EXPRESSED, IMPLIED, STATUTORY OR OTHERWISE WITH RESPECT TO THE MATERIALS OR OTHERWISE, AND EXPRESSLY DISCLAIMS ALL IMPLIED WARRANTIES INCLUDING, WITHOUT LIMITATION, THE WARRANTIES OF DESIGN, OF NONINFRINGEMENT, MERCHANTABILITY OR FITNESS FOR A PARTICULAR PURPOSE, OR ARISING FROM A COURSE OF DEALING, TRADE USAGE, TRADE PRACTICE, OR INDUSTRY STANDARDS.

GIGABYTE

Title	PS: 12V Current Steering & Hot Unplug Detect	
Size: Custom	Document Number: GV-N3080AORUSX W-10GD	Rev: 1.0
Date: Wednesday, September 30, 2020	Sheet 67 of 79	

PS: Discrete Steering

12V CURRENT STEERING (UNDER POWER BOOT):

PEX12V AND 12V_EXT8_F1

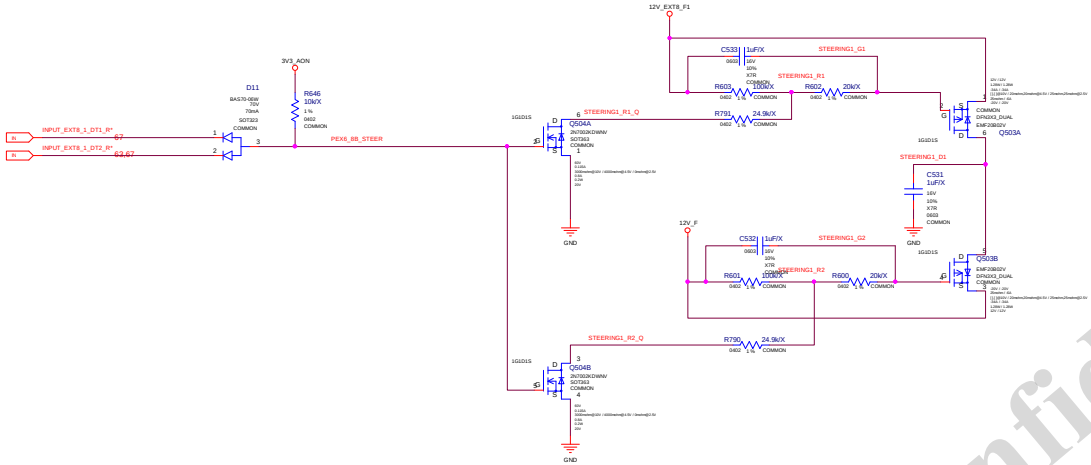

NO STUFF BY DEFAULT REF ONLY

PEX12V AND 12V_EXT8_F2

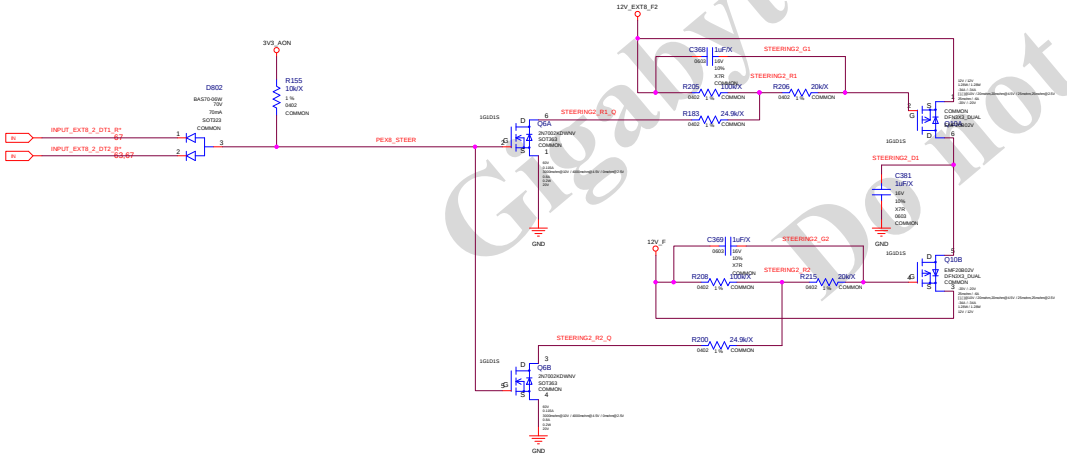

Gigabyte Confidential
Do not Copy

ASSEMBLY	<ASSEMBLY_DESCRIPTION>
PAGE DETAIL	PS: Discrete Power Steering

ALL NVIDIA DESIGN SPECIFICATIONS, REFERENCE SPECIFICATIONS, REFERENCE BOARDS, FILES, DRAWINGS, DIAGNOSTICS, LISTS AND OTHER DOCUMENTS OR INFORMATION (TOGETHER AND SEPARATELY, 'MATERIALS') ARE BEING PROVIDED 'AS IS'. THE MATERIALS CONTAIN KNOWN AND UNKNOWN VIOLATIONS OR DEVIATIONS OF INDUSTRY STANDARDS AND SPECIFICATIONS. NVIDIA MAKES NO WARRANTIES, EXPRESSED, IMPLIED, STATUTORY OR OTHERWISE WITH RESPECT TO THE MATERIALS OR OTHERWISE, AND EXPRESSLY DISCLAIMS ALL IMPLIED WARRANTIES INCLUDING, WITHOUT LIMITATION, THE WARRANTIES OF DESIGN, OF NONINFRINGEMENT, MERCHANTABILITY OR FITNESS FOR A PARTICULAR PURPOSE, OR ARISING FROM A COURSE OF DEALING, TRADE USAGE, TRADE PRACTICE, OR INDUSTRY STANDARDS.

GIGABYTE		
Title: PS: Discrete Steering		
Size: Custom	Document Number: GV-N3080AORUSX W-10GD	Rev: 1.0
Date: Wednesday, September 30, 2020	Sheet 68 of 79	

PS: Pre-Filter

Route the trace to PEX Golden Finger

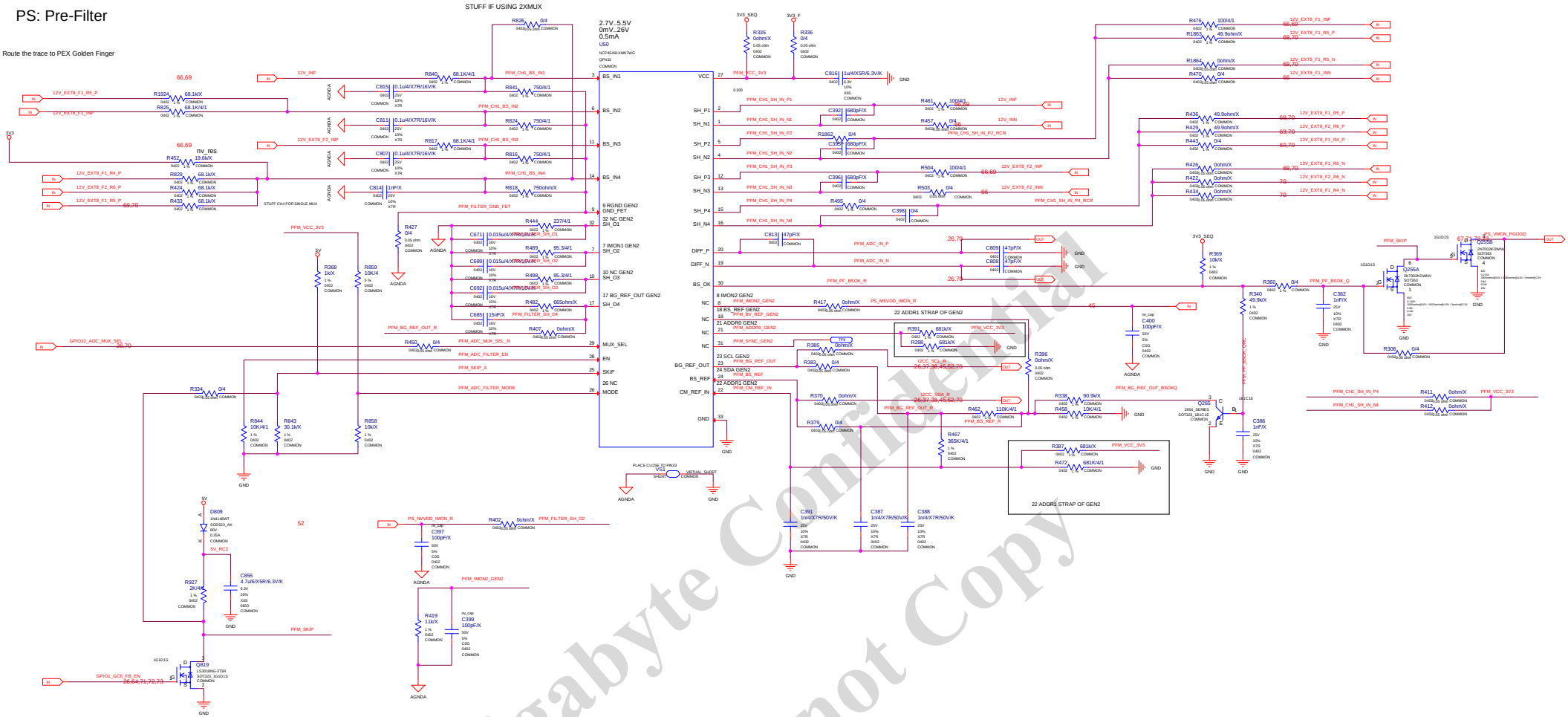

Gigabyte Confidential
Do not Copy

ASSEMBLY	<ASSEMBLY_DESCRIPTION>
PAGE DETAIL	PS: PREFILTER

ALL NVIDIA DESIGN SPECIFICATIONS, REFERENCE SPECIFICATIONS, REFERENCE BOARDS, FILES, DRAWINGS, DIAGNOSTICS, LISTS AND OTHER DOCUMENTS OR INFORMATION (TOGETHER AND SEPARATELY, 'MATERIALS') ARE BEING PROVIDED 'AS IS'. THE MATERIALS MAY CONTAIN KNOWN AND UNKNOWN VIOLATIONS OR DEVIATIONS OF INDUSTRY STANDARDS AND SPECIFICATIONS. NVIDIA MAKES NO WARRANTIES, EXPRESSED, IMPLIED, STATUTORY OR OTHERWISE WITH RESPECT TO THE MATERIALS OR OTHERWISE, AND EXPRESSLY DISCLAIMS ALL IMPLIED WARRANTIES INCLUDING, WITHOUT LIMITATION, THE WARRANTIES OF DESIGN, OF NONINFRINGEMENT, MERCHANTABILITY OR FITNESS FOR A PARTICULAR PURPOSE, OR ARISING FROM A COURSE OF DEALING, TRADE USAGE, TRADE PRACTICE, OR INDUSTRY STANDARDS.

GIGABYTE

Title	PS: Pre-Filter	
Size: Custom	Document Number: GV-N3080AORUSX W-10GD	Rev: 1.0
Date: Wednesday, September 30, 2020	Sheet 69 of 79	

PS: Pre-Filter B

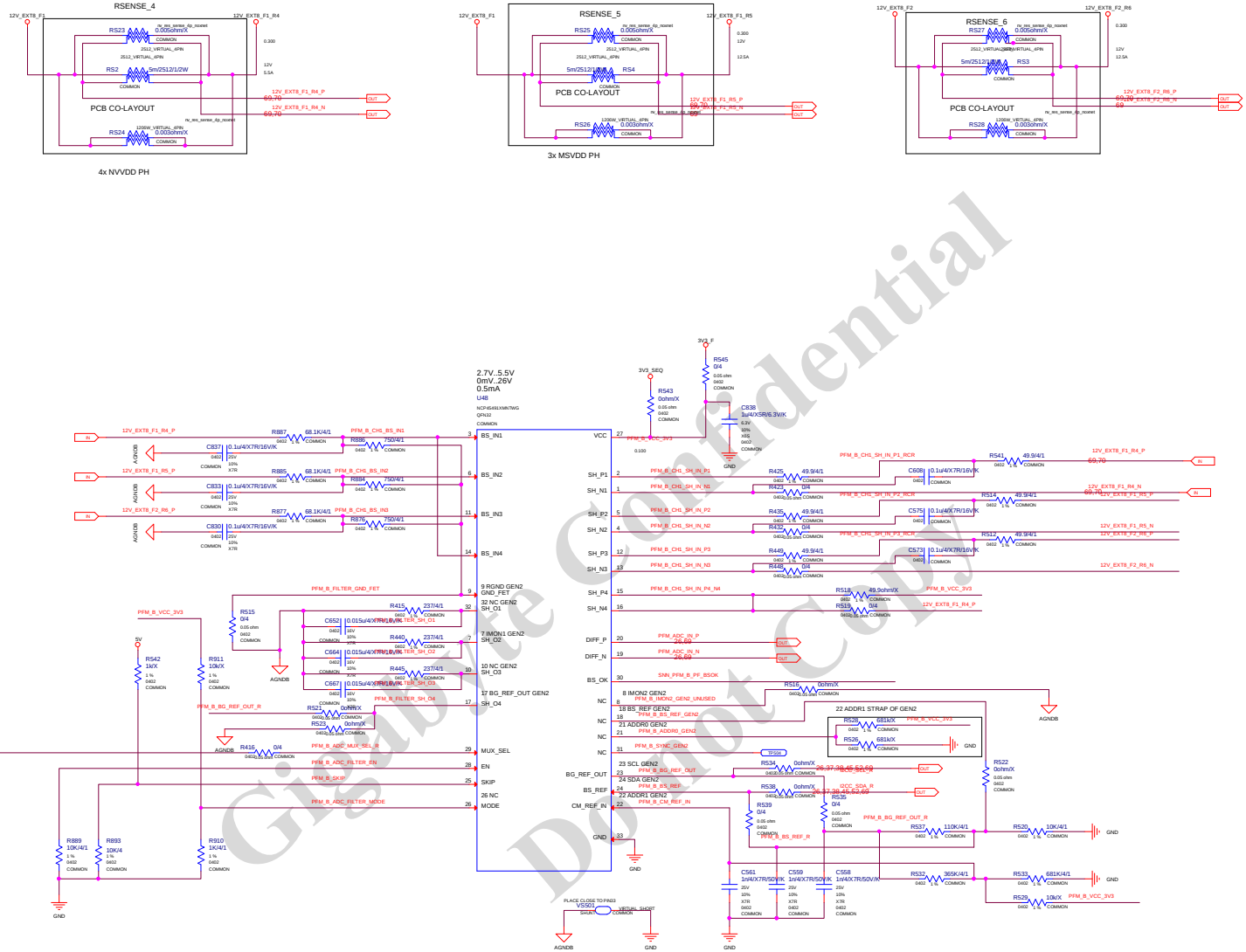

Gigabyte Confidential
Do not Copy

ASSEMBLY	<ASSEMBLY_DESCRIPTION>
PAGE DETAIL	PS: PREFILTER B

ALL NVIDIA DESIGN SPECIFICATIONS, REFERENCE SPECIFICATIONS, REFERENCE BOARDS, FILES, DRAWINGS, DIAGNOSTICS, LISTS AND OTHER DOCUMENTS OR INFORMATION (TOGETHER AND SEPARATELY, 'MATERIALS') ARE BEING PROVIDED 'AS IS'. THE MATERIALS MAY CONTAIN KNOWN AND UNKNOWN VIOLATIONS OR DEVIATIONS OF INDUSTRY STANDARDS AND SPECIFICATIONS. NVIDIA MAKES NO WARRANTIES, EXPRESSED, IMPLIED, STATUTORY OR OTHERWISE WITH RESPECT TO THE MATERIALS OR OTHERWISE, AND EXPRESSLY DISCLAIMS ANY IMPLIED WARRANTIES INCLUDING, WITHOUT LIMITATION, THE WARRANTIES OF DESIGN, OF NONINFRINGEMENT, MERCHANTABILITY OR FITNESS FOR A PARTICULAR PURPOSE, OR ARISING FROM A COURSE OF DEALING, TRADE USAGE, TRADE PRACTICE, OR INDUSTRY STANDARDS.

GIGABYTE

Title	PS: Pre-Filter B	
Size: Custom	Document Number: GV-N3080AORUSX W-10GD	Rev: 1.0
Date: Wednesday, September 30, 2020	Sheet 70 of 79	

SEQUENCE:5V,1V8,3V3_SEQ ENABLE

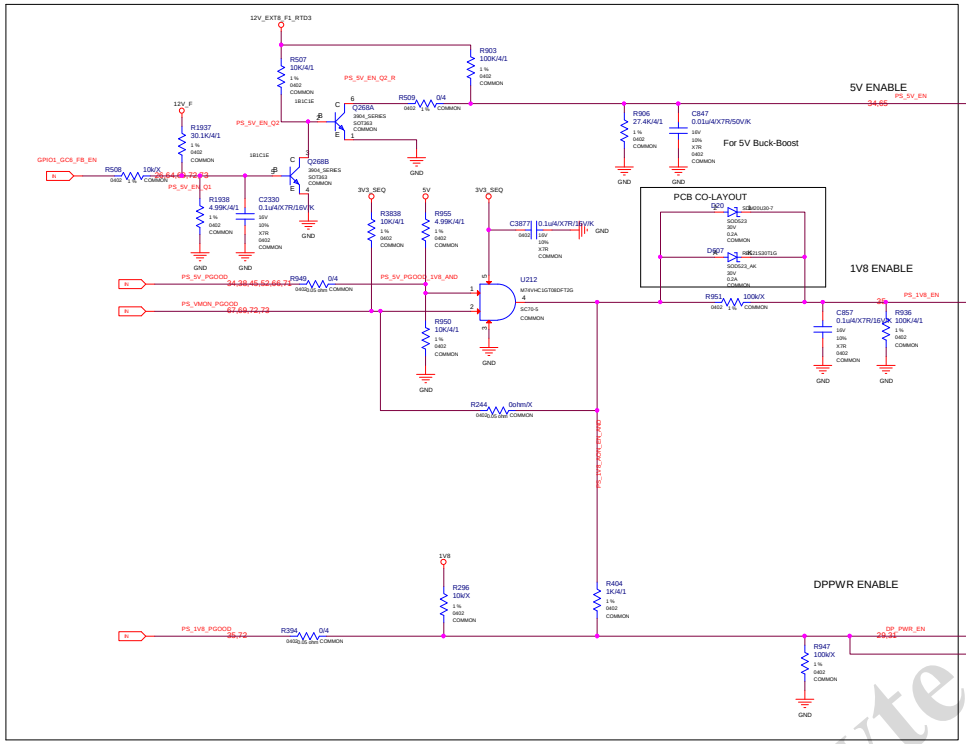

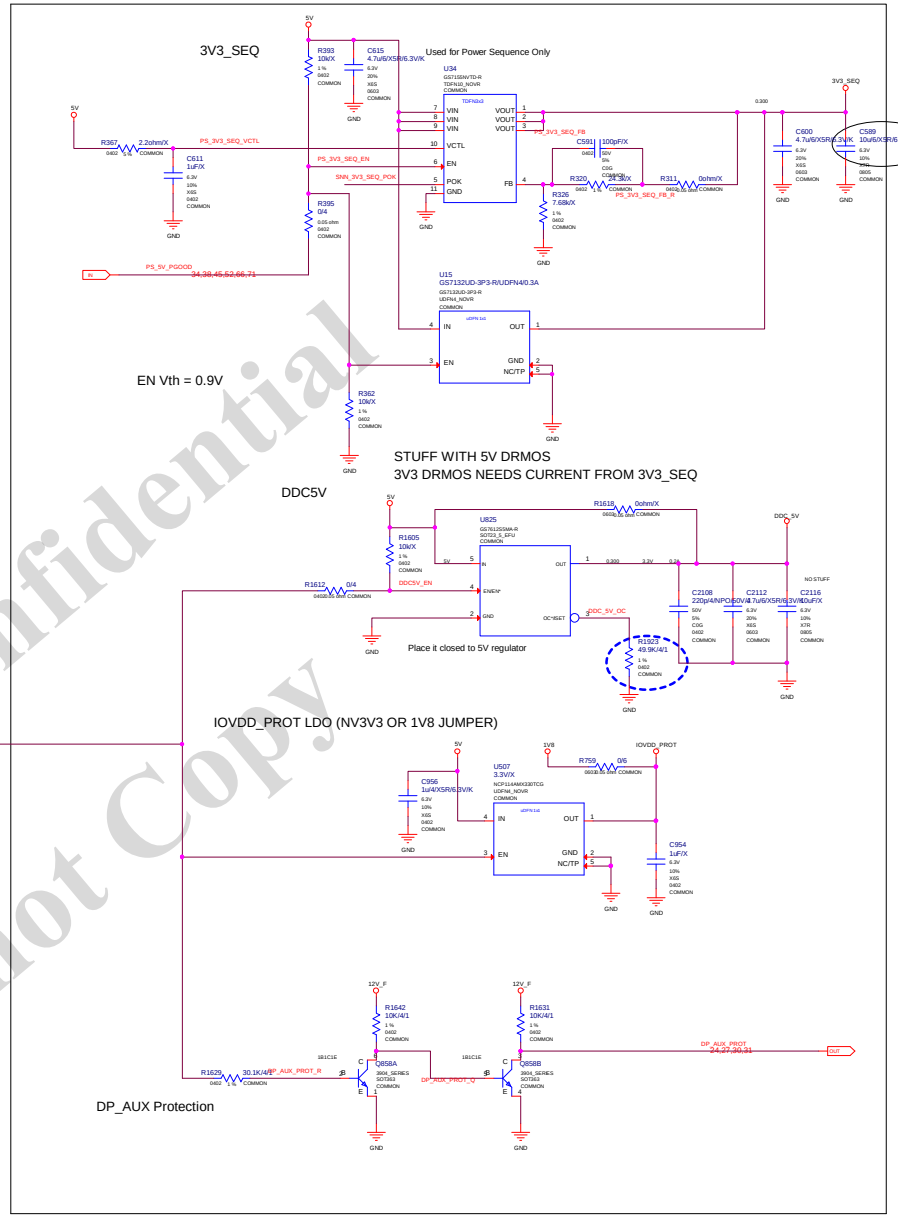

Gigabyte Confidential
Do not Copy

ASSEMBLY <ASSEMBLY_DESCRIPTION>
PAGE DETAIL Sequence: 5V, 1V8, 3V3_SEQ

ALL NVIDIA DESIGN SPECIFICATIONS, REFERENCE SPECIFICATIONS, REFERENCE BOARDS, FILES, DRAWINGS, DIAGNOSTICS, LISTS AND OTHER DOCUMENTS OR INFORMATION (TOGETHER AND SEPARATELY, 'MATERIALS') ARE BEING PROVIDED 'AS IS'. THE MATERIALS MAY CONTAIN KNOWN AND UNKNOWN VIOLATIONS OR DEVIATIONS OF INDUSTRY STANDARDS AND SPECIFICATIONS. NVIDIA MAKES NO WARRANTIES, EXPRESSED, IMPLIED, STATUTORY OR OTHERWISE WITH RESPECT TO THE MATERIALS OR OTHERWISE, AND EXPRESSLY DISCLAIMS ALL IMPLIED WARRANTIES INCLUDING, WITHOUT LIMITATION, THE WARRANTIES OF DESIGN, OF NONINFRINGEMENT, MERCHANTABILITY OR FITNESS FOR A PARTICULAR PURPOSE, OR ARISING FROM A COURSE OF DEALING, TRADE USAGE, TRADE PRACTICE, OR INDUSTRY STANDARDS.

GIGABYTE			
Title: SEQUENCE:5V,1V8,3V3_SEQ ENABLE			
Size: Custom	Document Number: GV-N3080AORUSX W-10GD		Rev: 1.0
Date: Wednesday, September 30, 2020	Sheet: 71	of: 79	

SEQUENCE:NV,PEX,FB ENABLE

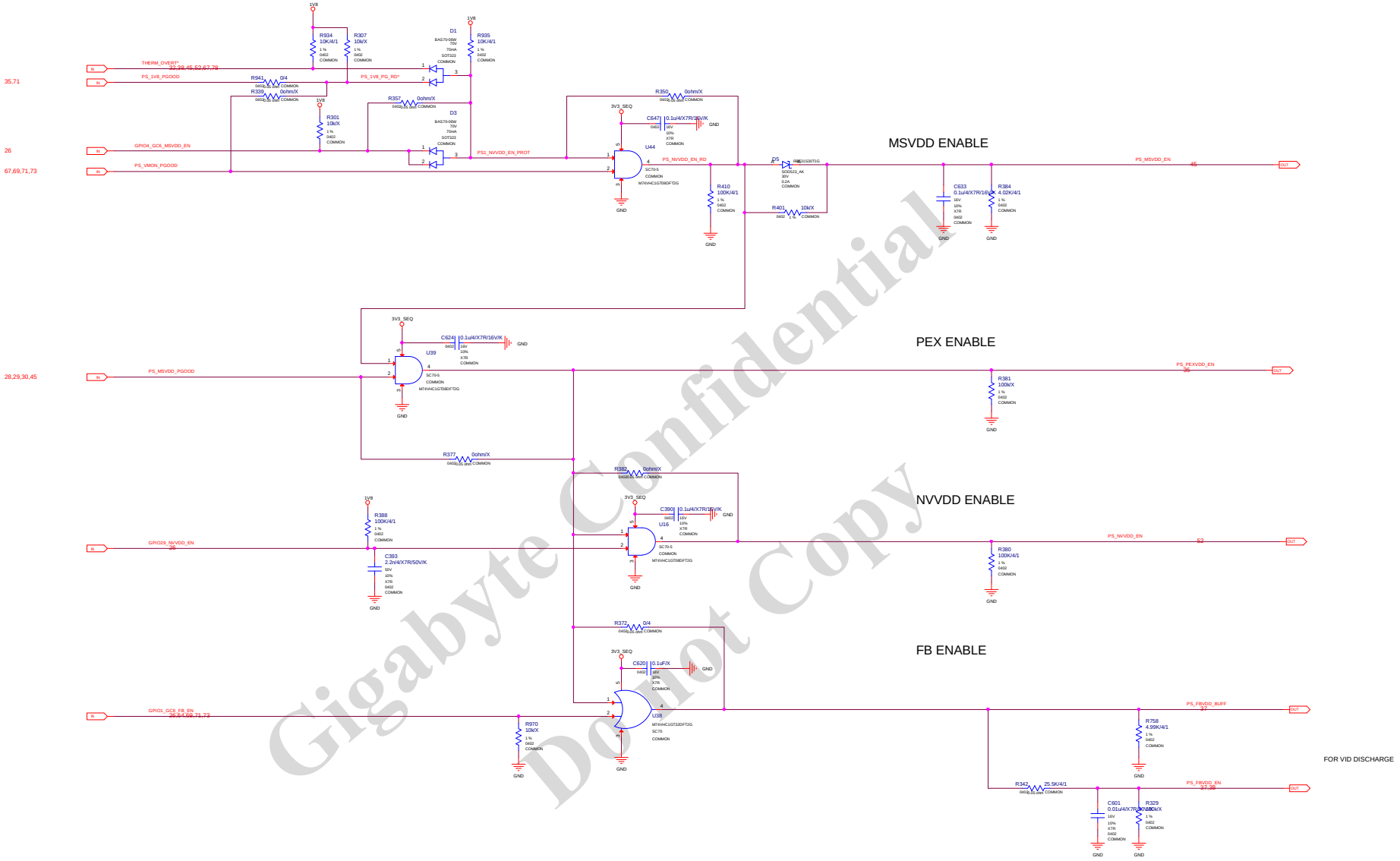

Gigabyte Confidential
Do not Copy

ASSEMBLY <ASSEMBLY_DESCRIPTION>
PAGE DETAIL Sequence: NV, PEX, FB EN

ALL NVIDIA DESIGN SPECIFICATIONS, REFERENCE SPECIFICATIONS, REFERENCE BOARDS, FILES, DRAWINGS, DIAGNOSTICS, LISTS AND OTHER DOCUMENTS OR INFORMATION (TOGETHER AND SEPARATELY, 'MATERIALS') ARE BEING PROVIDED 'AS IS'. THE MATERIALS MAY CONTAIN KNOWN AND UNKNOWN VIOLATIONS OR DEVIATIONS OF INDUSTRY STANDARDS AND SPECIFICATIONS. NVIDIA MAKES NO WARRANTIES, EXPRESSED, IMPLIED, STATUTORY OR OTHERWISE WITH RESPECT TO THE MATERIALS OR OTHERWISE, AND EXPRESSLY DISCLAIMS ALL IMPLIED WARRANTIES INCLUDING, WITHOUT LIMITATION, THE WARRANTIES OF DESIGN, OF NONINFRINGEMENT, MERCHANTABILITY OR FITNESS FOR A PARTICULAR PURPOSE, OR ARISING FROM A COURSE OF DEALING, TRADE USAGE, TRADE PRACTICE, OR INDUSTRY STANDARDS.

GIGABYTE			
Title: SEQUENCE:NV,PEX,FB ENABLE			
Size: Custom	Document Number: GV-N3080AORUSX W-10GD		Rev: 1.0
Date: Wednesday, September 30, 2020	Sheet: 72	of: 79	

Sequence: 3V3 MONITOR

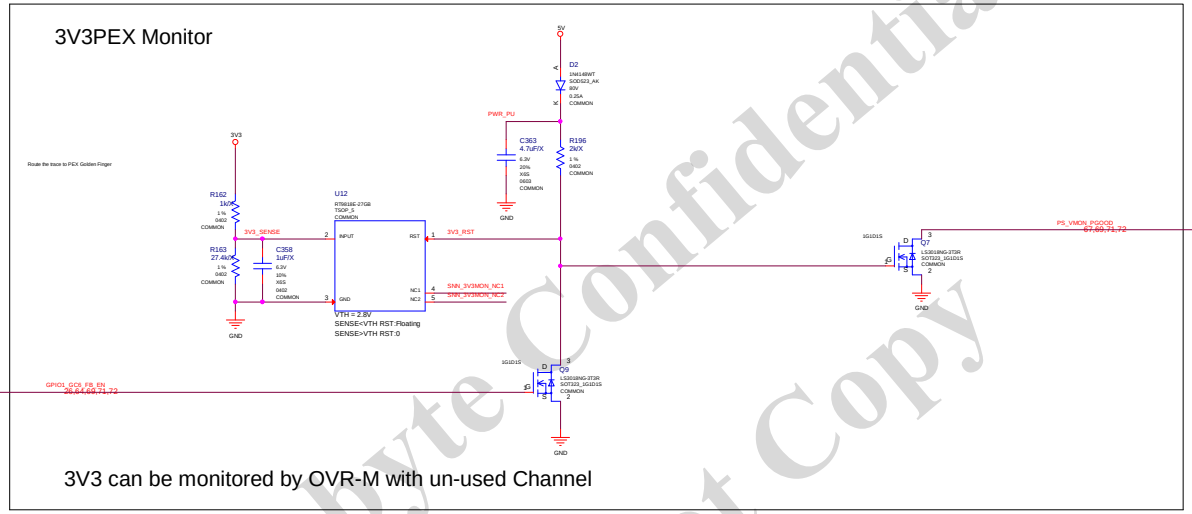

Gigabyte Confidential
Do not Copy

ASSEMBLY <ASSEMBLY_DESCRIPTION>
PAGE DETAIL Sequence: 3V3 MONITOR

ALL NVIDIA DESIGN SPECIFICATIONS, REFERENCE SPECIFICATIONS, REFERENCE BOARDS, FILES, DRAWINGS, DIAGNOSTICS, LISTS AND OTHER DOCUMENTS OR INFORMATION (TOGETHER AND SEPARATELY, 'MATERIALS') ARE BEING PROVIDED 'AS IS'. THE MATERIALS MAY CONTAIN KNOWN AND UNKNOWN VIOLATIONS OR DEVIATIONS OF INDUSTRY STANDARDS AND SPECIFICATIONS. NVIDIA MAKES NO WARRANTIES, EXPRESSED, IMPLIED, STATUTORY OR OTHERWISE WITH RESPECT TO THE MATERIALS OR OTHERWISE, AND EXPRESSLY DISCLAIMS ALL IMPLIED WARRANTIES INCLUDING, WITHOUT LIMITATION, THE WARRANTIES OF DESIGN, OF NONINFRINGEMENT, MERCHANTABILITY OR FITNESS FOR A PARTICULAR PURPOSE, OR ARISING FROM A COURSE OF DEALING, TRADE USAGE, TRADE PRACTICE, OR INDUSTRY STANDARDS.

GIGABYTE			
Title: Sequence: 3V3 MONITOR			
Size: Custom	Document Number: GV-N3080AORUSX W-10GD		Rev: 1.0
Date: Wednesday, September 30, 2020	Sheet 73 of 79		

SEQUENCE:MISC

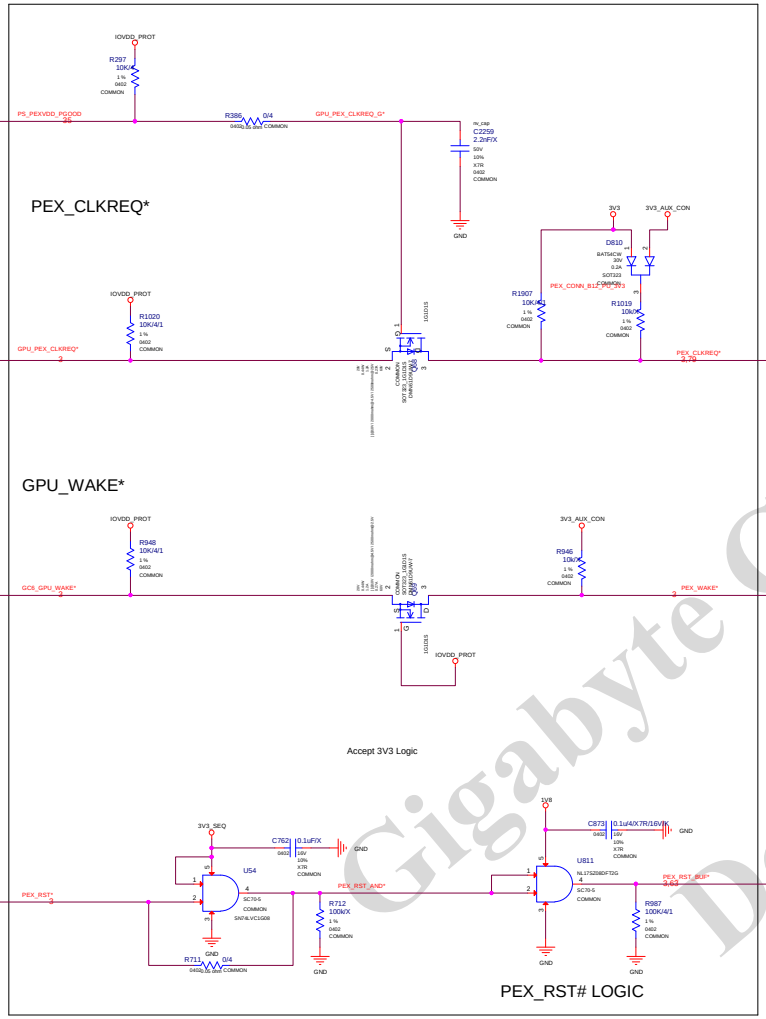

Gigabyte Confidential
Do not Copy

ALL NVIDIA DESIGN SPECIFICATIONS, REFERENCE SPECIFICATIONS, REFERENCE BOARDS, FILES, DRAWINGS, DIAGNOSTICS, LISTS AND OTHER DOCUMENTS OR INFORMATION (TOGETHER AND SEPARATELY, 'MATERIALS') ARE BEING PROVIDED 'AS IS'. THE MATERIALS MAY CONTAIN KNOWN AND UNKNOWN VIOLATIONS OR DEVIATIONS OF INDUSTRY STANDARDS AND SPECIFICATIONS. NVIDIA MAKES NO WARRANTIES, EXPRESSED, IMPLIED, STATUTORY OR OTHERWISE WITH RESPECT TO THE MATERIALS OR OTHERWISE, AND EXPRESSLY DISCLAIMS ANY IMPLIED WARRANTIES INCLUDING, WITHOUT LIMITATION, THE WARRANTIES OF DESIGN, OF NONINFRINGEMENT, MERCHANTABILITY OR FITNESS FOR A PARTICULAR PURPOSE, OR ARISING FROM A COURSE OF DEALING, TRADE USAGE, TRADE PRACTICE, OR INDUSTRY STANDARDS.

ASSEMBLY <ASSEMBLY_DESCRIPTION>
PAGE DETAIL Sequence: MISC

	GIGABYTE
Title	SEQUENCE:MISC
Size: Custom	Document Number: GV-N3080AORUSX W-10GD
Rev	1.0
Date:	Wednesday, September 30, 2020
Sheet	74 of 79

MISC: LED & FAN

2-PIN LED HEADER

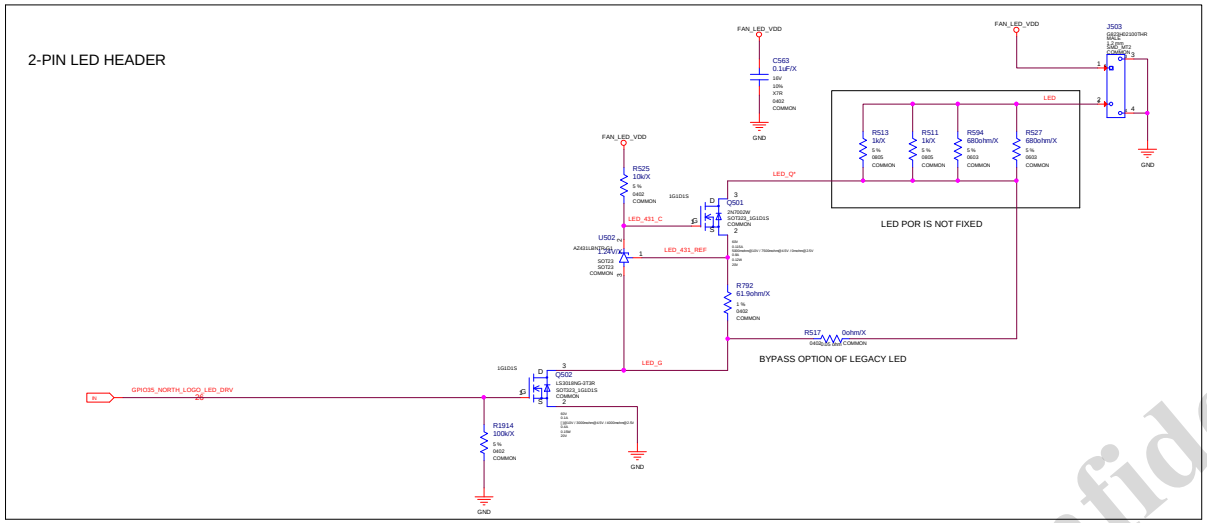

DUAL FAN 4-PIN HEADERS

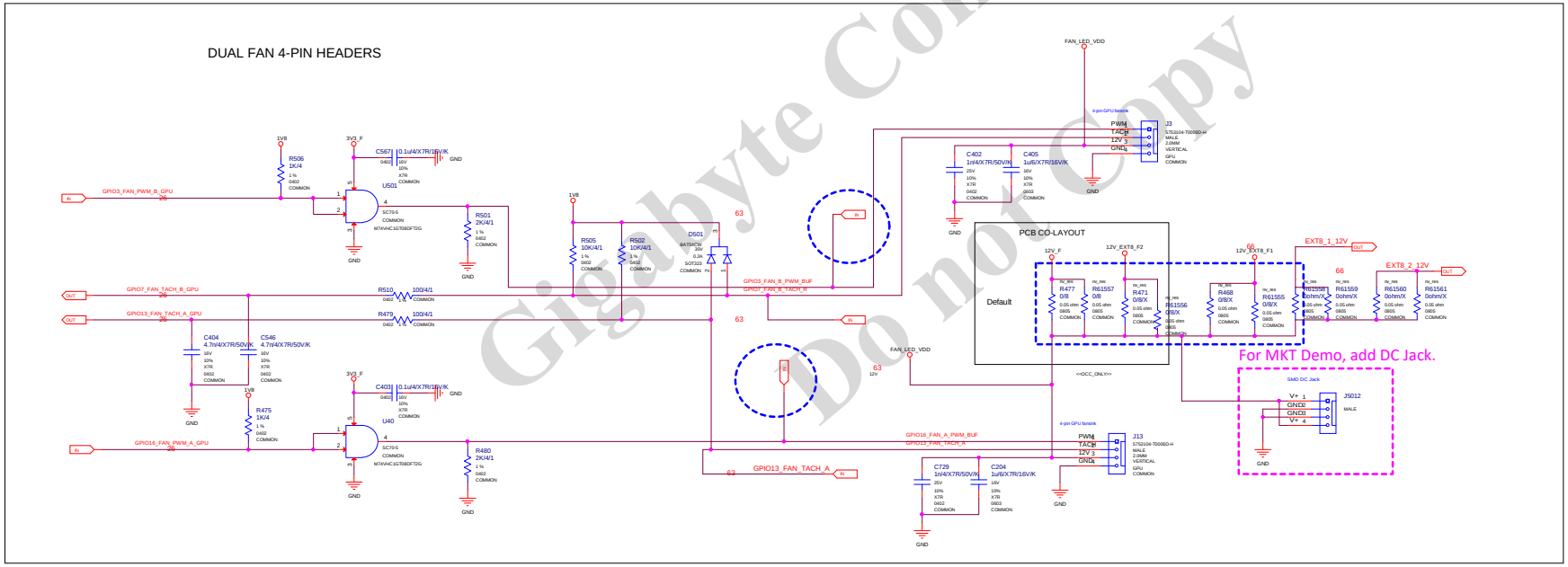

Gigabyte Confidential
Do not Copy

ASSEMBLY	<ASSEMBLY_DESCRIPTION>
PAGE DETAIL	MISC: LED & FAN

ALL NVIDIA DESIGN SPECIFICATIONS, REFERENCE SPECIFICATIONS, REFERENCE BOARDS, FILES, DRAWINGS, DIAGNOSTICS, LISTS AND OTHER DOCUMENTS OR INFORMATION (TOGETHER AND SEPARATELY, 'MATERIALS') ARE BEING PROVIDED 'AS IS'. THE MATERIALS MAY CONTAIN KNOWN AND UNKNOWN VIOLATIONS OR DEVIATIONS OF INDUSTRY STANDARDS AND SPECIFICATIONS. NVIDIA MAKES NO WARRANTIES, EXPRESSED, IMPLIED, STATUTORY OR OTHERWISE WITH RESPECT TO THE MATERIALS OR OTHERWISE, AND EXPRESSLY DISCLAIMS ALL IMPLIED WARRANTIES INCLUDING, WITHOUT LIMITATION, THE WARRANTIES OF DESIGN, OF NONINFRINGEMENT, MERCHANTABILITY OR FITNESS FOR A PARTICULAR PURPOSE, OR ARISING FROM A COURSE OF DEALING, TRADE USAGE, TRADE PRACTICE, OR INDUSTRY STANDARDS.

GIGABYTE	
Title	MISC: LED & FAN
Size: Custom	Document Number: GV-N3080AORUSX W-10GD
Rev: 1.0	
Date: Wednesday, September 30, 2020	Sheet 75 of 79

MISC: RGBW LED REF

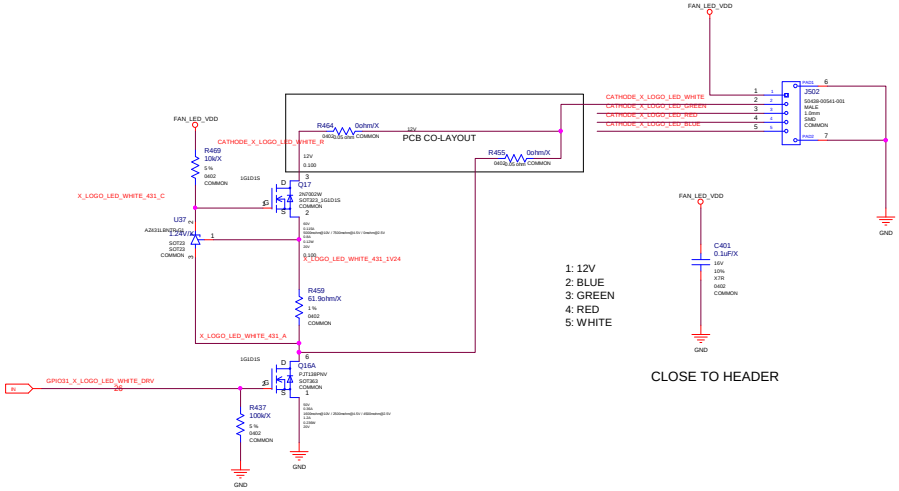

WHITE DRIVE

CONNECTOR SIZE TO FIT LAYOUT
ALL CIRCUIT NO STUFF BY DEFAULT
ALIGN WITH PASH
IF ADDTIONAL POWER CONSUPTION R NEEDED, IT SHOULD BE ON LED MOD.

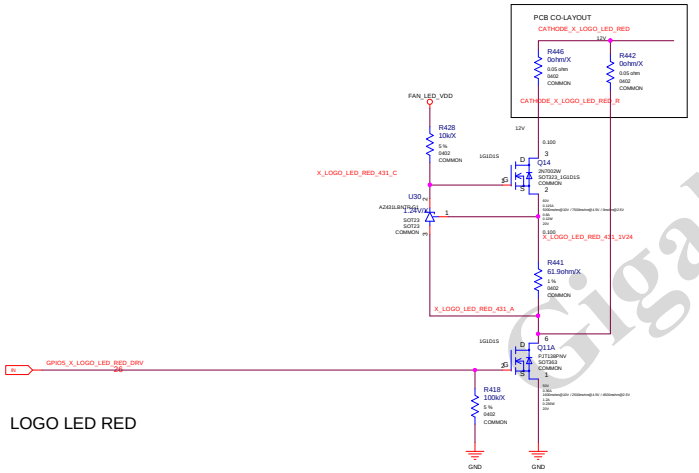

LOGO LED RED

RED DRIVE

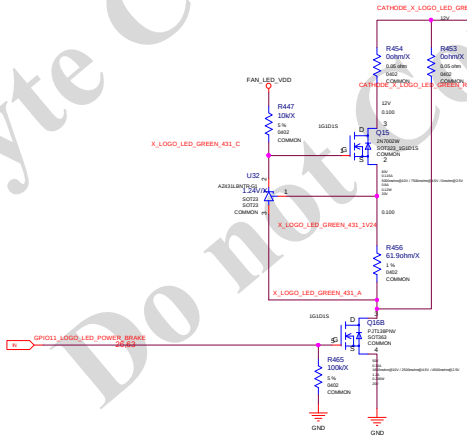

GREEN DRIVE

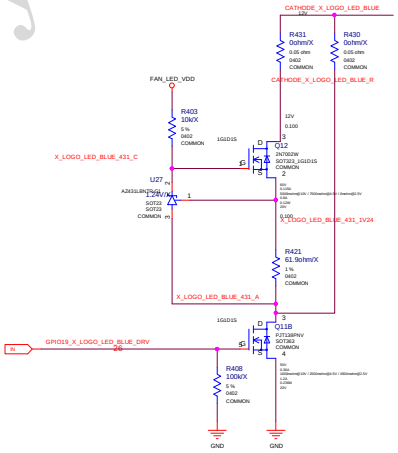

BLUE DRIVE

Gigabyte Confidential
Do not Copy

ASSEMBLY	<ASSEMBLY_DESCRIPTION>
PAGE DETAIL	RGBW LED REF

ALL NVIDIA DESIGN SPECIFICATIONS, REFERENCE SPECIFICATIONS, REFERENCE BOARDS, FILES, DRAWINGS, DIAGNOSTICS, LISTS AND OTHER DOCUMENTS OR INFORMATION (TOGETHER AND SEPARATELY, 'MATERIALS') ARE BEING PROVIDED 'AS IS'. THE MATERIALS MAY CONTAIN KNOWN AND UNKNOWN VIOLATIONS OR DEVIATIONS OF INDUSTRY STANDARDS AND SPECIFICATIONS. NVIDIA MAKES NO WARRANTIES, EXPRESSED, IMPLIED, STATUTORY OR OTHERWISE WITH RESPECT TO THE MATERIALS OR OTHERWISE, AND EXPRESSLY DISCLAIMS ALL IMPLIED WARRANTIES INCLUDING, WITHOUT LIMITATION, THE WARRANTIES OF DESIGN, OF NONINFRINGEMENT, MERCHANTABILITY OR FITNESS FOR A PARTICULAR PURPOSE, OR ARISING FROM A COURSE OF DEALING, TRADE USAGE, TRADE PRACTICE, OR INDUSTRY STANDARDS.

GIGABYTE			
Title: MISC: RGBW LED REF			
Size: Custom	Document Number: GV-N3080AORUSX W-10GD		Rev: 1.0
Date: Wednesday, September 30, 2020	Sheet: 76 of 79		

Mechanical: Mounting holes

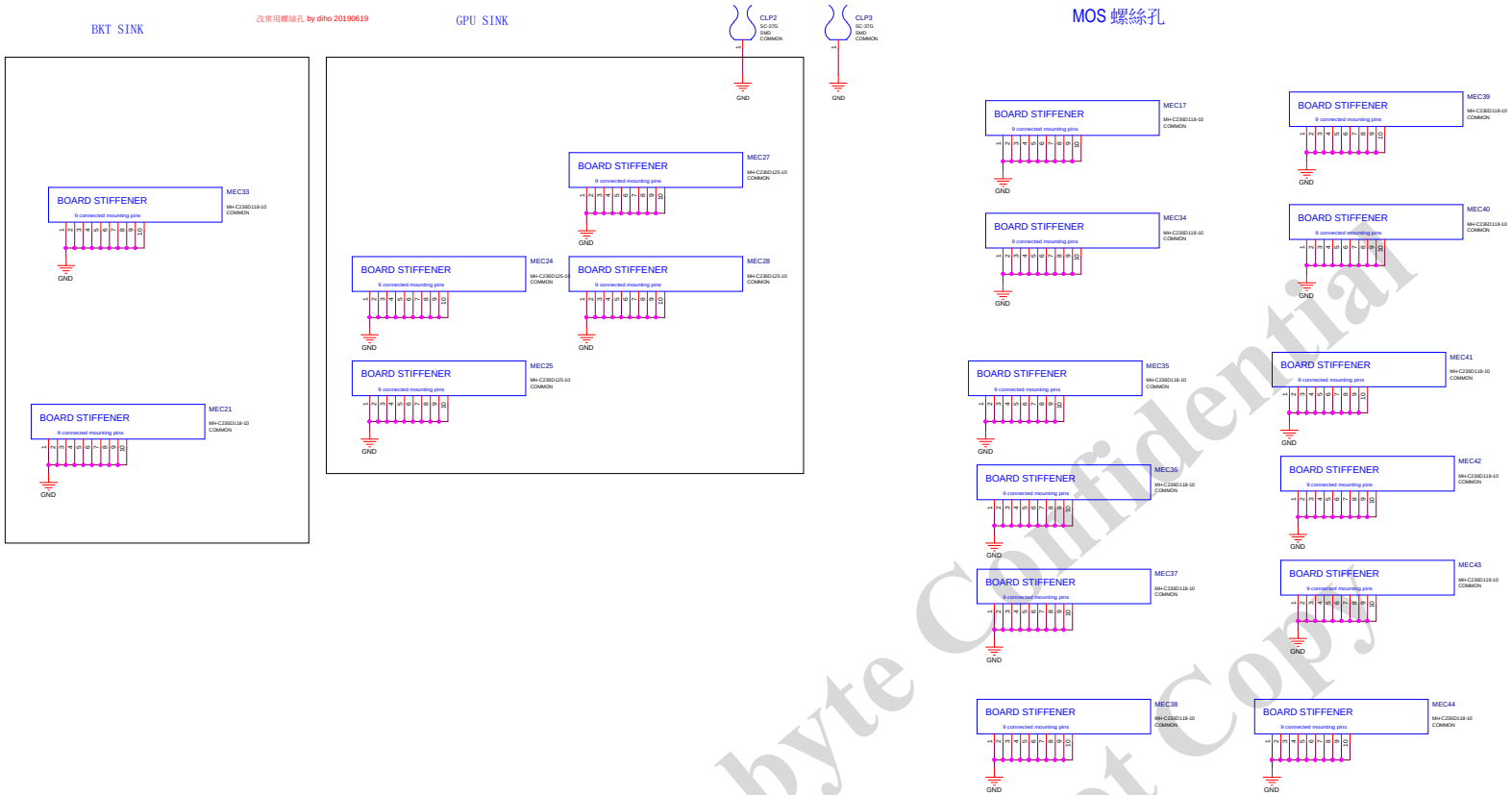

Gigabyte Confidential
Do not Copy

ALL NVIDIA DESIGN SPECIFICATIONS, REFERENCE SPECIFICATIONS, REFERENCE BOARDS, FILES, DRAWINGS, DIAGNOSTICS, LISTS AND OTHER DOCUMENTS OR INFORMATION (TOGETHER AND SEPARATELY, 'MATERIALS') ARE BEING PROVIDED 'AS IS'. THE MATERIALS MAY CONTAIN KNOWN AND UNKNOWN VIOLATIONS OR DEVIATIONS OF INDUSTRY STANDARDS AND SPECIFICATIONS. NVIDIA MAKES NO WARRANTIES, EXPRESSED, IMPLIED, STATUTORY OR OTHERWISE WITH RESPECT TO THE MATERIALS OR OTHERWISE, AND EXPRESSLY DISCLAIMS ALL IMPLIED WARRANTIES INCLUDING, WITHOUT LIMITATION, THE WARRANTIES OF DESIGN, OF NONINFRINGEMENT, MERCHANTABILITY OR FITNESS FOR A PARTICULAR PURPOSE, OR ARISING FROM A COURSE OF DEALING, TRADE USAGE, TRADE PRACTICE, OR INDUSTRY STANDARDS.

GIGABYTE		
File: Mechanical: Mounting holes		
Size: Custom	Document Number: GV-N3080AORUSX W-10GD	Rev: 1.0
Date: Wednesday, September 30, 2020	Sheet 77 of 79	

VR THERMAL PROTECTION

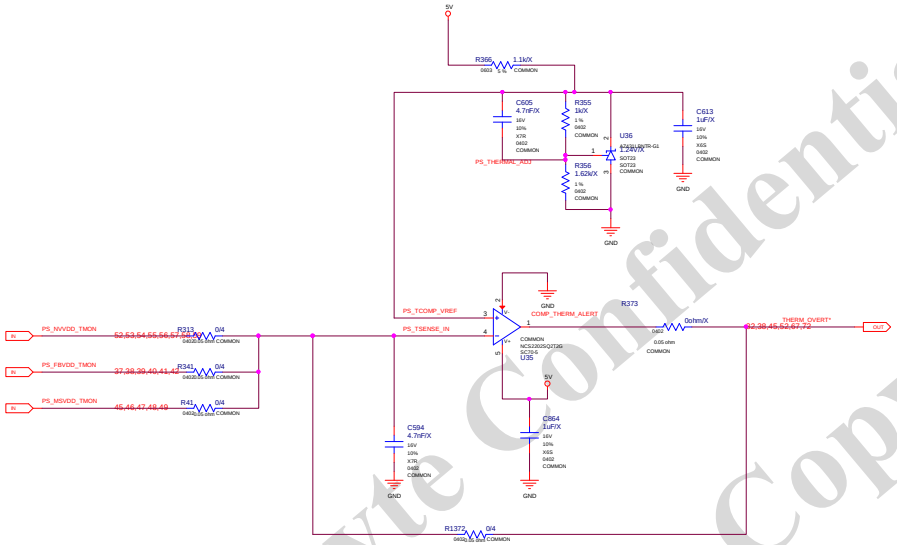

Gigabyte Confidential
Do not Copy

ASSEMBLY | <ASSEMBLY_DESCRIPTION>
PAGE DETAIL | VR Thermal Protection

ALL NVIDIA DESIGN SPECIFICATIONS, REFERENCE SPECIFICATIONS, REFERENCE BOARDS, FILES, DRAWINGS, DIAGNOSTICS, LISTS AND OTHER DOCUMENTS OR INFORMATION (TOGETHER AND SEPARATELY, 'MATERIALS') ARE BEING PROVIDED 'AS IS'. THE MATERIALS MAY CONTAIN KNOWN AND UNKNOWN VIOLATIONS OR DEVIATIONS OF INDUSTRY STANDARDS AND SPECIFICATIONS. NVIDIA MAKES NO WARRANTIES, EXPRESSED, IMPLIED, STATUTORY OR OTHERWISE WITH RESPECT TO THE MATERIALS OR OTHERWISE, AND EXPRESSLY DISCLAIMS ANY IMPLIED WARRANTIES INCLUDING, WITHOUT LIMITATION, THE WARRANTIES OF DESIGN, OF NONINFRINGEMENT, MERCHANTABILITY OR FITNESS FOR A PARTICULAR PURPOSE, OR ARISING FROM A COURSE OF DEALING, TRADE USAGE, TRADE PRACTICE, OR INDUSTRY STANDARDS.

GIGABYTE		
Title: VR THERMAL PROTECTION		
Size: Custom	Document Number: GV-N3080AORUSX W-10GD	Rev: 1.0
Date: Wednesday, September 30, 2020	Sheet 78 of 79	

PCI TERM

Gigabyte Confidential
Do not Copy

ALL NVIDIA DESIGN SPECIFICATIONS, REFERENCE SPECIFICATIONS, REFERENCE BOARDS, FILES, DRAWINGS, DIAGNOSTICS, LISTS AND OTHER DOCUMENTS OR INFORMATION (TOGETHER AND SEPARATELY, 'MATERIALS') ARE BEING PROVIDED 'AS IS'. THE MATERIALS MAY CONTAIN KNOWN AND UNKNOWN VIOLATIONS OR DEVIATIONS OF INDUSTRY STANDARDS AND SPECIFICATIONS. NVIDIA MAKES NO WARRANTIES, EXPRESSED, IMPLIED, STATUTORY OR OTHERWISE WITH RESPECT TO THE MATERIALS OR OTHERWISE, AND EXPRESSLY DISCLAIMS ALL IMPLIED WARRANTIES INCLUDING, WITHOUT LIMITATION, THE WARRANTIES OF DESIGN, OF NONINFRINGEMENT, MERCHANTABILITY OR FITNESS FOR A PARTICULAR PURPOSE, OR ARISING FROM A COURSE OF DEALING, TRADE USAGE, TRADE PRACTICE, OR INDUSTRY STANDARDS.

ASSEMBLY	<ASSEMBLY_DESCRIPTION>
PAGE DETAIL	PCIE TERM

GIGABYTE		
Title: PCI TERM		
Size: Custom	Document Number: GV-N3080AORUSX W-10GD	Rev: 1.0
Date: Wednesday, September 30, 2020	Sheet 79 of 79	