P654 - GT200/NVIO2

P654, GT200-100, 896MB/1792MB - GDDR3 BGA136 16M/32Mx32

DVI-I + DVI-I/DP + HD/SD/TVout, SPDIF, Dual SLI

Table of Contents

Page 1: Title Page
Page 2: Block Diagram
Page 3: PCI Express / JTAG
Page 4: Framebuffer A,B: GPU Section + Calibration
Page 5: Framebuffer C,D: GPU Section
Page 6: Framebuffer E,F: GPU Section
Page 7: Framebuffer G,H: GPU Section
Page 8: Framebuffer A: Memory Section
Page 9: Framebuffer B: Memory Section
Page 10: Framebuffer C: Memory Section
Page 11: Framebuffer D: Memory Section
Page 12: Framebuffer E: Memory Section
Page 13: Framebuffer F: Memory Section
Page 14: Framebuffer G: Memory Section
Page 15: Framebuffer H: N/A
Page 16: Decoupling: Memory Section A-D
Page 17: Decoupling: Memory Section E-G
Page 18: Decoupling: GPU (NVVDD, FBVDDQ)
Page 19: GPU-NVIO Interconnect: GV Bus / PLL
Page 20: Display: DACA (Middle DVI-I)
Page 21: Display: DACC (South DVI-I)
Page 22: Display: DACB (North MiniDIN) SD/HDTV out
Page 23: Display: IFPAB for south DVI-I (with DACC)
Page 24: Display: IFPCD for middle DVI-I (with DACA)
Page 25: Display: DP - Analogix
Page 26: Connectors: SPDIF
Page 27: Connectors: DR Interface (Dual SLI)
Page 28: MISC: GPIO / XTAL / VBIOS / HDCP / I2C
Page 29: MISC: FAN / THERM
Page 30: MISC: MIO / DVI / STRAPS
Page 31: Power and GND (GPU and NVIOx)
Page 32: Power: Hybrid Power
Page 33: Power Supply: 5V + 5V Alt / SHDN LATCH / IFP_IOVDD
Page 34: Power Supply: 2V5, DP_PWR, 1V15 (PEX_VDD, GV_VDD)
Page 35: Power Supply: Combined FBVDD/Q
Page 36: Power Supply: NVVDD REGULATOR

Page 39: NVVDD & FBVDDQ SENSE/MSUR
Page 40: Power: Input Rail Filter and Detection Logic
Page 41: Thermal/Mechanical

sku	VARIANT	NVPN	ASSEMBLY
B	BASE	600-10654-BASE-A03	BASE LEVEL GENERIC SCHEMATIC ONLY, COMMON & NO_STUFF ASSEMBLY NOTES AND BOM NOT FINAL
1	SKU0000	600-10654-0000-000	DT, GT200-100, 550/1350/1000, 896MB - 16Mx32 GDDR3, DVI-I + DVI-I + HDTV
2	SKU0001	600-10654-0001-000	DT, GT200-100, 550/1350/1000, 896MB - 16Mx32 GDDR3, DVI-I + DP + HDTV
3	SKU0051	600-10654-0051-300	DT, GT200B-103, 576/1242/1000, 896MB - 16MX32 GDDR3, DVI-I + DVI-I
4	<UNDEFINED>	<UNDEFINED>	<UNDEFINED>
5	<UNDEFINED>	<UNDEFINED>	<UNDEFINED>
6	<UNDEFINED>	<UNDEFINED>	<UNDEFINED>
7	<UNDEFINED>	<UNDEFINED>	<UNDEFINED>
8	<UNDEFINED>	<UNDEFINED>	<UNDEFINED>
9	<UNDEFINED>	<UNDEFINED>	<UNDEFINED>
10	<UNDEFINED>	<UNDEFINED>	<UNDEFINED>
11	<UNDEFINED>	<UNDEFINED>	<UNDEFINED>
12	<UNDEFINED>	<UNDEFINED>	<UNDEFINED>
13	<UNDEFINED>	<UNDEFINED>	<UNDEFINED>
14	<UNDEFINED>	<UNDEFINED>	<UNDEFINED>
15	<UNDEFINED>	<UNDEFINED>	<UNDEFINED>

MS-V180 -0A

PAGE 21:VGS SLIM
PAGE-22 remove DACB HDTV Circuit
PAGE 24:DVI change HDMI
PAGE 25:DP modify DSDA/DSCL circuit
PAGE 28:ADD I2C0_SCL/SDA and GPIO 3 circuit,remove GPIO 12
PAGE 29:remove R112,R113 and GPIO8_FAN_TACH link to U21
PAGE 33:remove R671,R572
PAGE 35:remove RT8805CQVA change UPI6205 and UPI6262 circuit
PAGE 36:remove NCP5388MNR2G change UPI6208 circuit
PAGE 37/38 :remove NCP3418B change UPI6281 circuit
PAGE 39 :Add WL83L786G circuit

MS-V180 -10

1.PAGE 37,38 modify D15~D21 footprint
2..PAGE 37,38 add CAP

MS-V180 -20

ASSEMBLY	BASE LEVEL GENERIC SCHEMATIC ONLY, COMMON & NO_STUFF ASSEMBLY NOTES AND BOM NOT FINAL
PAGE DETAIL	Title Page

ALL NVIDIA DESIGN SPECIFICATIONS, REFERENCE SPECIFICATIONS, REFERENCE BOARDS, FILES, DRAWINGS, DIAGNOSTICS, LISTS AND OTHER DOCUMENTS OR INFORMATION (TOGETHER AND SEPARATELY, 'MATERIALS') ARE BEING PROVIDED 'AS IS'. THE MATERIALS MAY CONTAIN KNOWN AND UNKNOWN VIOLATIONS OR DEVIATIONS OF INDUSTRY STANDARDS AND SPECIFICATIONS. NVIDIA MAKES NO WARRANTIES, EXPRESSED, IMPLIED, STATUTORY OR OTHERWISE WITH RESPECT TO THE MATERIALS OR OTHERWISE, AND EXPRESSLY DISCLAIMS ALL IMPLIED WARRANTIES INCLUDING, WITHOUT LIMITATION, THE WARRANTIES OF DESIGN, OF NONINFRINGEMENT, MERCHANTABILITY OR FITNESS FOR A PARTICULAR PURPOSE, OR ARISING FROM A COURSE OF DEALING, TRADE USAGE, TRADE PRACTICE, OR INDUSTRY STANDARDS.

Micro-Star International Co., LTD.

<Title>

Size	Document Number	Rev
Custom	<Doc> MS-V180	<RevCode>

Date: Friday, June 05, 2009 Sheet 1 of 41

Block Diagram

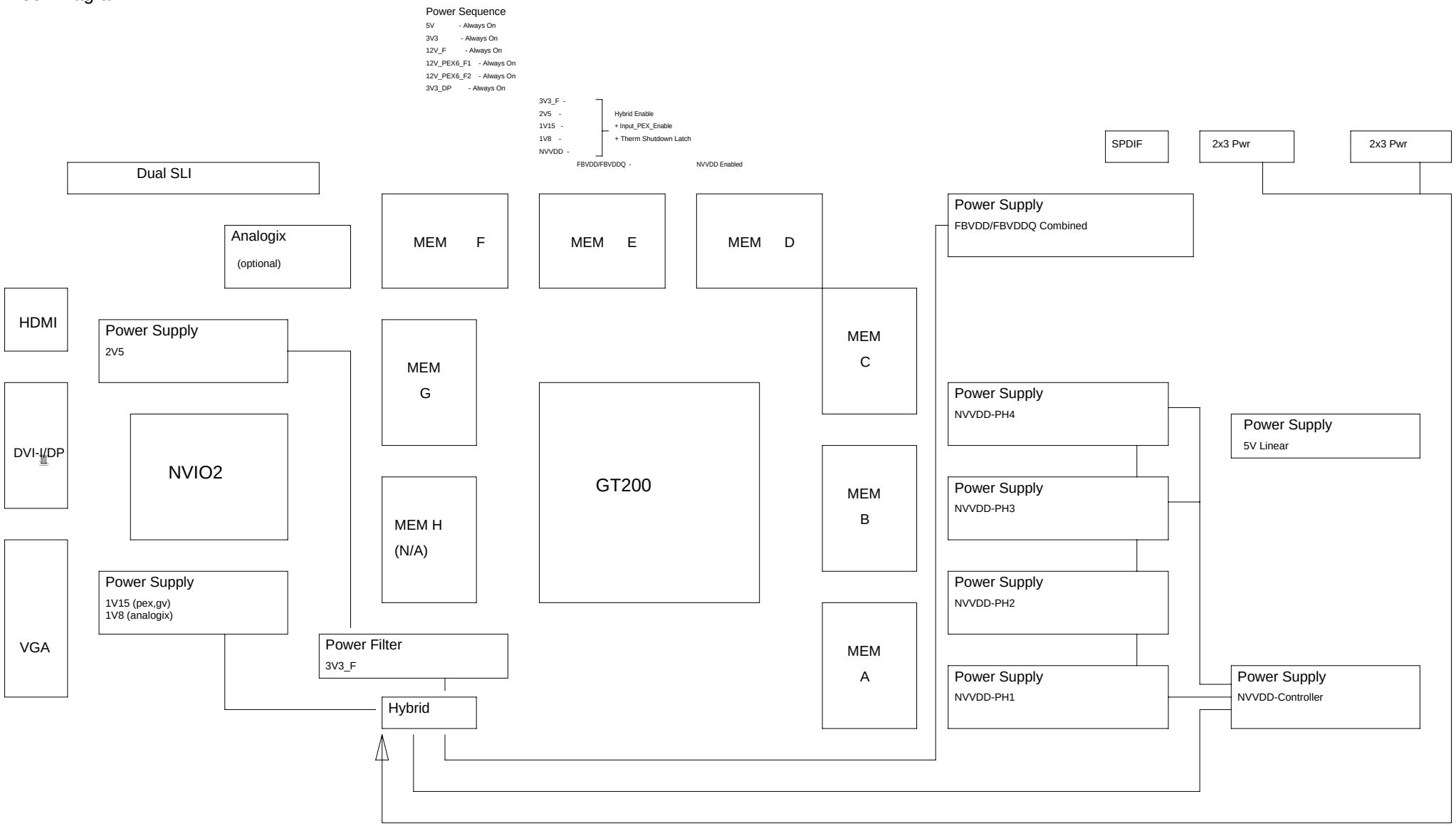

ASSEMBLY	BASE LEVEL GENERIC SCHEMATIC ONLY, COMMON & NO_STUFF ASSEMBLY NOTES AND BOM NOT FINAL
PAGE DETAIL	Block Diagram

ALL NVIDIA DESIGN SPECIFICATIONS, REFERENCE SPECIFICATIONS, REFERENCE BOARDS, FILES, DRAWINGS, DIAGNOSTICS, LISTS AND OTHER DOCUMENTS OR INFORMATION (TOGETHER AND SEPARATELY, 'MATERIALS') ARE BEING PROVIDED 'AS IS'. THE MATERIALS MAY CONTAIN KNOWN AND UNKNOWN VIOLATIONS OR DEVIATIONS OF INDUSTRY STANDARDS AND SPECIFICATIONS. NVIDIA MAKES NO WARRANTIES, EXPRESSED, IMPLIED, STATUTORY OR OTHERWISE WITH RESPECT TO THE MATERIALS OR OTHERWISE, AND EXPRESSLY DISCLAIMS ALL IMPLIED WARRANTIES INCLUDING, WITHOUT LIMITATION, THE WARRANTIES OF DESIGN, OF NONINFRINGEMENT, MERCHANTABILITY OR FITNESS FOR A PARTICULAR PURPOSE, OR ARISING FROM A COURSE OF DEALING, TRADE USAGE, TRADE PRACTICE, OR INDUSTRY STANDARDS.

Micro-Star International Co., LTD.

<Title>

Size	Document Number	Rev
Custom	<Doc>	<RevCode>

Date: Friday, June 05, 2009 Sheet 2 of 41

PCI Express / JTAG

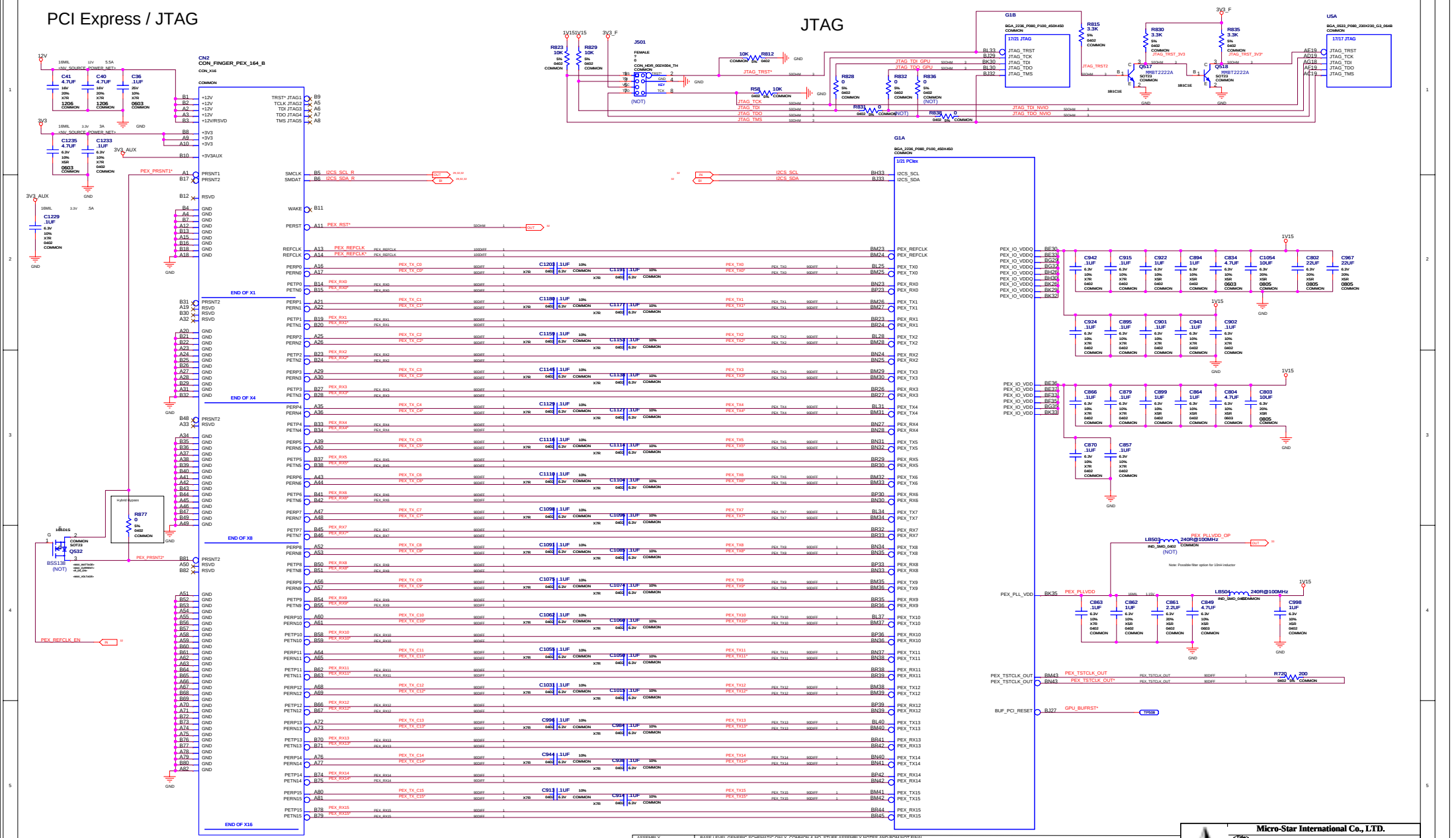

ASSEMBLY | BASE LEVEL GENERIC SCHEMATIC ONLY, COMMON & NO_STUFF ASSEMBLY NOTES AND BOM NOT FINAL
PAGE DETAIL | PCI Express / JTAG

ALL NVIDIA DESIGN SPECIFICATIONS, REFERENCE SPECIFICATIONS, REFERENCE BOARDS, FILES, DRAWINGS, DIAGNOSTICS, LISTS AND OTHER DOCUMENTS OR INFORMATION (TOGETHER AND SEPARATELY, 'MATERIALS') ARE BEING PROVIDED 'AS IS'. THE MATERIALS MAY CONTAIN KNOWN AND UNKNOWN VIOLATIONS OR DEVIATIONS OF INDUSTRY STANDARDS AND SPECIFICATIONS. NVIDIA MAKES NO WARRANTIES, EXPRESSED, IMPLIED, STATUTORY OR OTHERWISE WITH RESPECT TO THE MATERIALS OR OTHERWISE, AND EXPRESSLY DISCLAIMS ALL IMPLIED WARRANTIES INCLUDING, WITHOUT LIMITATION, THE WARRANTIES OF DESIGN, OF NONINFRINGEMENT, MERCHANTABILITY OR FITNESS FOR A PARTICULAR PURPOSE, OR ARISING FROM A COURSE OF DEALING, TRADE USAGE, TRADE PRACTICE, OR INDUSTRY STANDARDS.

Micro-Star International Co., LTD.

<Title>

Size	Document Number	Rev
Custom	<Doc>	<FevCode>

Date: Friday, June 05, 2009 | Sheet 3 of 41

Framebuffer A,B: GPU Section + Calibration

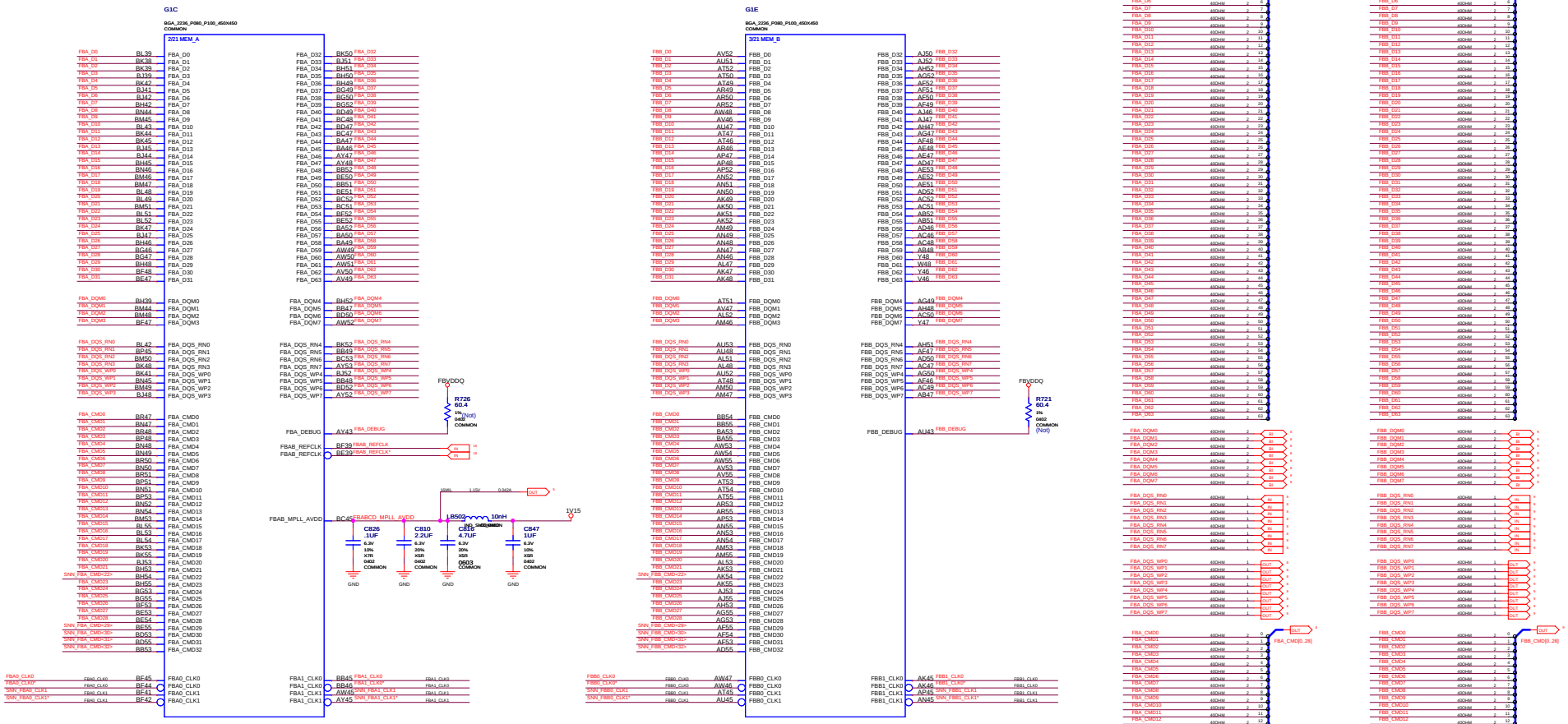

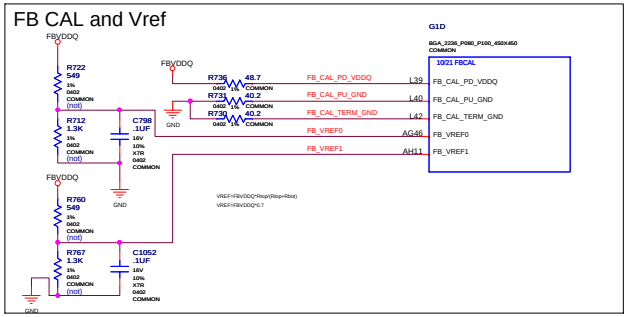

ASSEMBLY	BASE LEVEL GENERIC SCHEMATIC ONLY, COMMON & NO_STUFF ASSEMBLY NOTES AND BOM NOT FINAL
PAGE DETAIL	Framebuffer A,B: GPU Section + Calibration

ALL NVIDIA DESIGN SPECIFICATIONS, REFERENCE SPECIFICATIONS, REFERENCE BOARDS, FILES, DRAWINGS, DIAGNOSTICS, LISTS AND OTHER DOCUMENTS OR INFORMATION (TOGETHER AND SEPARATELY, "MATERIALS") ARE BEING PROVIDED "AS IS". THE MATERIALS MAY CONTAIN KNOWN AND UNKNOWN VIOLATIONS OR DEVIATIONS OF INDUSTRY STANDARDS AND SPECIFICATIONS. NVIDIA MAKES NO WARRANTIES, EXPRESSED, IMPLIED, STATUTORY OR OTHERWISE WITH RESPECT TO THE MATERIALS OR OTHERWISE, AND EXPRESSLY DISCLAIMS ALL IMPLIED WARRANTIES INCLUDING, WITHOUT LIMITATION, THE WARRANTIES OF DESIGN, OF NONINFRINGEMENT, MERCHANTABILITY OR FITNESS FOR A PARTICULAR PURPOSE, OR ARISING FROM A COURSE OF DEALING, TRADE USAGE, TRADE PRACTICE, OR INDUSTRY STANDARDS.

Micro-Star International Co., LTD.

<Title>

Size	Document Number	Rev
Custom	<Doc>	<FevCode>

Date: Friday, June 05, 2009 | Sheet 4 of 41

Framebuffer C,D: GPU Section

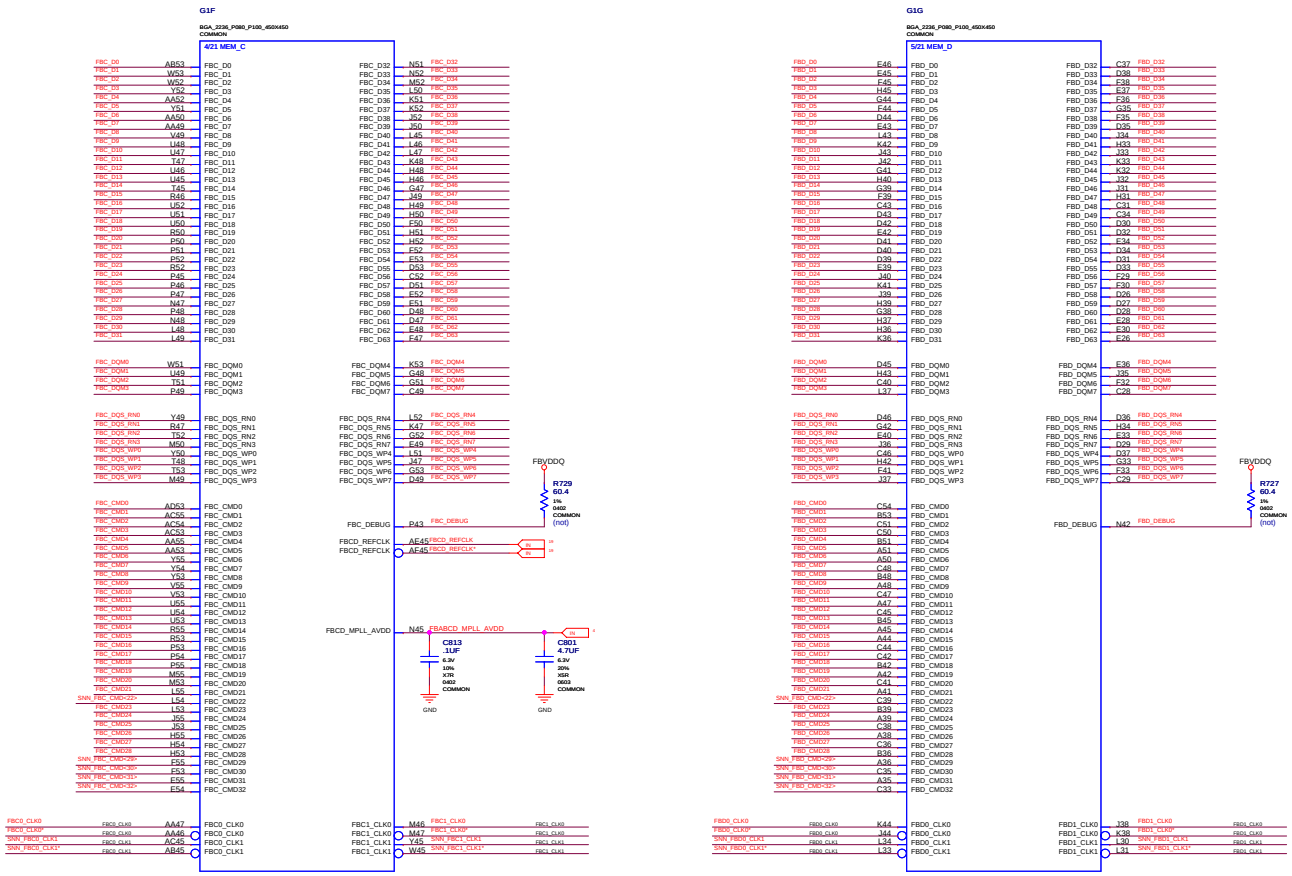

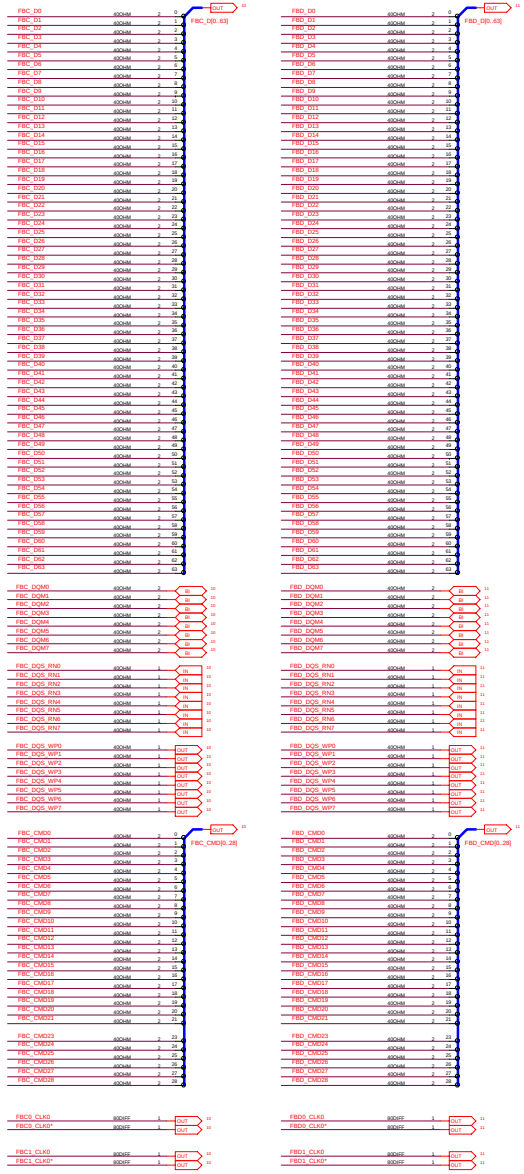

ASSEMBLY	BASE LEVEL GENERIC SCHEMATIC ONLY, COMMON & NO_STUFF ASSEMBLY NOTES AND BOM NOT FINAL
PAGE DETAIL	Framebuffer C,D: GPU Section

ALL NVIDIA DESIGN SPECIFICATIONS, REFERENCE SPECIFICATIONS, REFERENCE BOARDS, FILES, DRAWINGS, DIAGNOSTICS, LISTS AND OTHER DOCUMENTS OR INFORMATION (TOGETHER AND SEPARATELY, "MATERIALS") ARE BEING PROVIDED "AS IS". THE MATERIALS MAY CONTAIN KNOWN AND UNKNOWN VIOLATIONS OR DEVIATIONS OF INDUSTRY STANDARDS AND SPECIFICATIONS. NVIDIA MAKES NO WARRANTIES, EXPRESSED, IMPLIED, STATUTORY OR OTHERWISE WITH RESPECT TO THE MATERIALS OR OTHERWISE, AND EXPRESSLY DISCLAIMS ALL IMPLIED WARRANTIES INCLUDING, WITHOUT LIMITATION, THE WARRANTIES OF DESIGN, OF NONINFRINGEMENT, MERCHANTABILITY OR FITNESS FOR A PARTICULAR PURPOSE, OR ARISING FROM A COURSE OF DEALING, TRADE USAGE, TRADE PRACTICE, OR INDUSTRY STANDARDS.

Micro-Star International Co., LTD.

<Title>

Size	Document Number	Rev
Custom	<Doc>	<FevCode>

Date: Friday, June 05, 2009 | Sheet 5 of 41

Framebuffer E,F: GPU Section

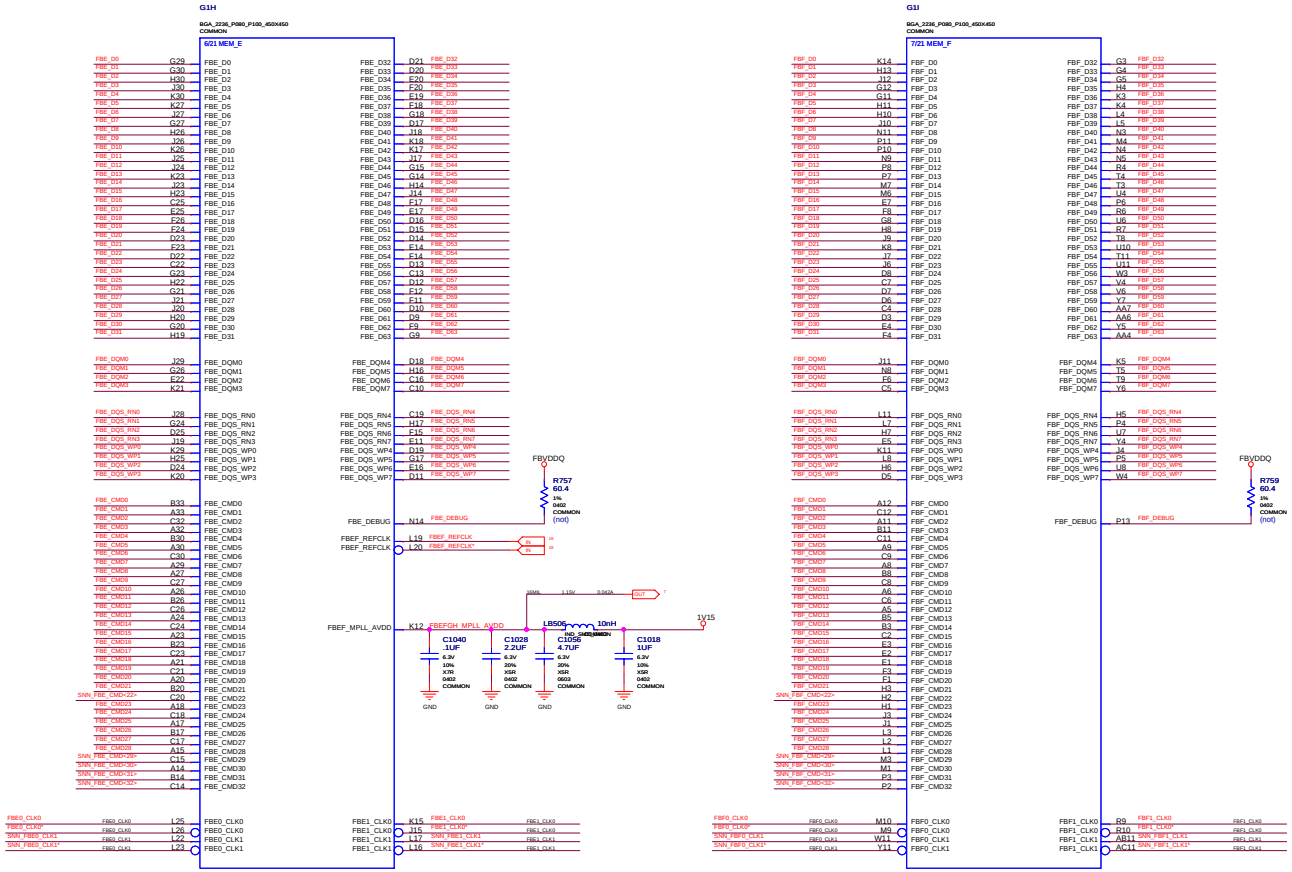

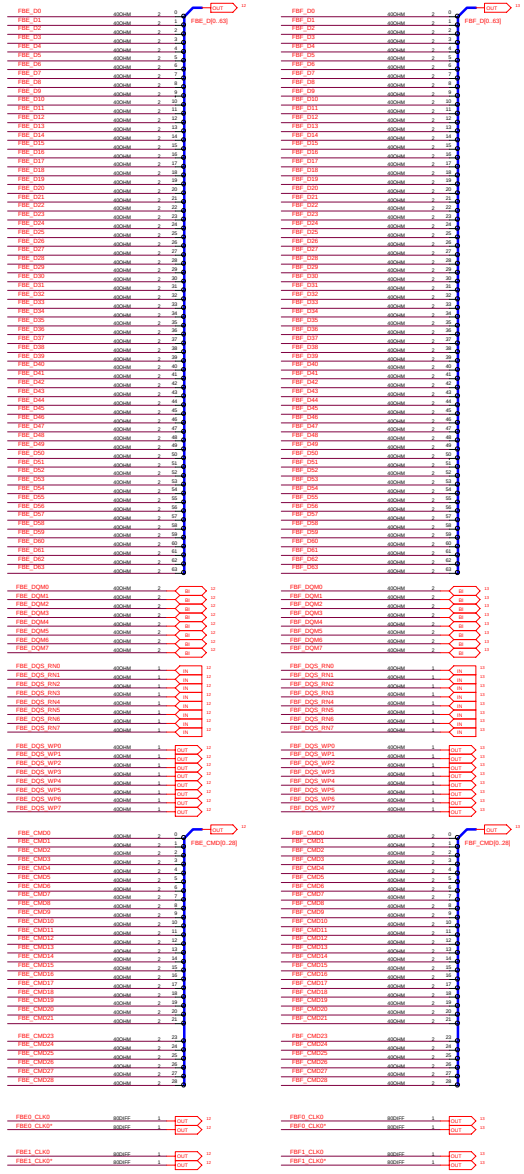

ASSEMBLY	BASE LEVEL GENERIC SCHEMATIC ONLY, COMMON & NO_STUFF ASSEMBLY NOTES AND BOM NOT FINAL
PAGE DETAIL	Framebuffer E,F: GPU Section

ALL NVIDIA DESIGN SPECIFICATIONS, REFERENCE SPECIFICATIONS, REFERENCE BOARDS, FILES, DRAWINGS, DIAGNOSTICS, LISTS AND OTHER DOCUMENTS OR INFORMATION (TOGETHER AND SEPARATELY, "MATERIALS") ARE BEING PROVIDED "AS IS". THE MATERIALS MAY CONTAIN KNOWN AND UNKNOWN VIOLATIONS OR DEVIATIONS OF INDUSTRY STANDARDS AND SPECIFICATIONS. NVIDIA MAKES NO WARRANTIES, EXPRESSED, IMPLIED, STATUTORY OR OTHERWISE WITH RESPECT TO THE MATERIALS OR OTHERWISE, AND EXPRESSLY DISCLAIMS ALL IMPLIED WARRANTIES INCLUDING, WITHOUT LIMITATION, THE WARRANTIES OF DESIGN, OF NONINFRINGEMENT, MERCHANTABILITY OR FITNESS FOR A PARTICULAR PURPOSE, OR ARISING FROM A COURSE OF DEALING, TRADE USAGE, TRADE PRACTICE, OR INDUSTRY STANDARDS.

Micro-Star International Co., LTD.

<Title>

Size	Document Number	Rev
Custom	<Doc>	<FevCode>

Date: Friday, June 05, 2009 | Sheet 6 of 41

Framebuffer G,H: GPU Section

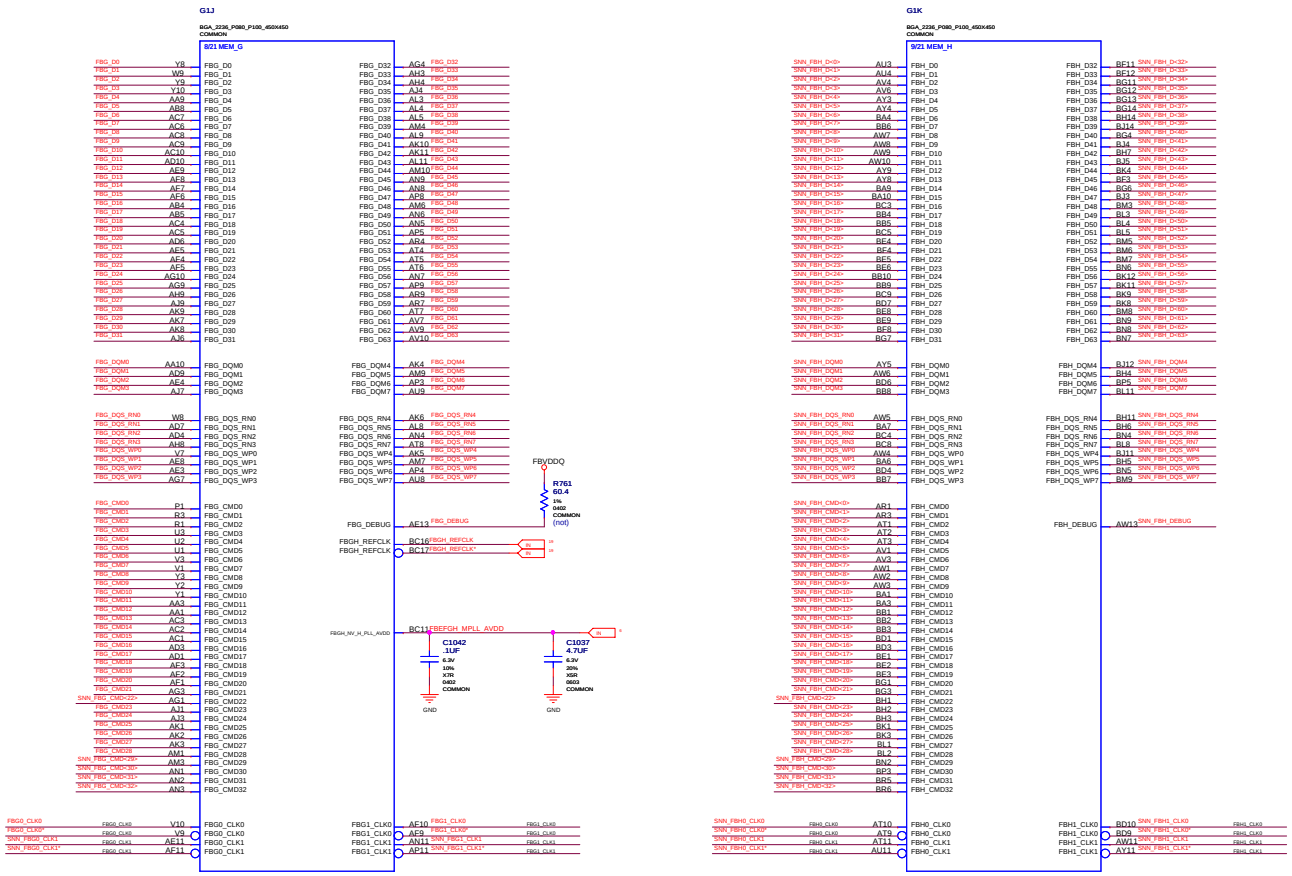

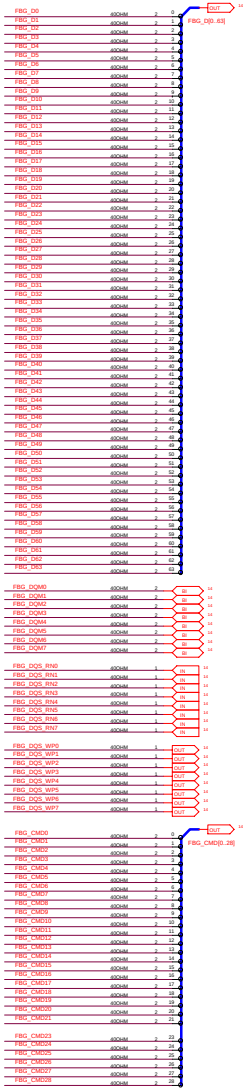

ALL NVIDIA DESIGN SPECIFICATIONS, REFERENCE SPECIFICATIONS, REFERENCE BOARDS, FILES, DRAWINGS, DIAGNOSTICS, LISTS AND OTHER DOCUMENTS OR INFORMATION (TOGETHER AND SEPARATELY, 'MATERIALS') ARE BEING PROVIDED 'AS IS'. THE MATERIALS MAY CONTAIN KNOWN AND UNKNOWN VIOLATIONS OR DEVIATIONS OF INDUSTRY STANDARDS AND SPECIFICATIONS. NVIDIA MAKES NO WARRANTIES, EXPRESSED, IMPLIED, STATUTORY OR OTHERWISE WITH RESPECT TO THE MATERIALS OR OTHERWISE, AND EXPRESSLY DISCLAIMS ALL IMPLIED WARRANTIES INCLUDING, WITHOUT LIMITATION, THE WARRANTIES OF DESIGN, OF NONINFRINGEMENT, MERCHANTABILITY OR FITNESS FOR A PARTICULAR PURPOSE, OR ARISING FROM A COURSE OF DEALING, TRADE USAGE, TRADE PRACTICE, OR INDUSTRY STANDARDS.

ASSEMBLY	BASE LEVEL GENERIC SCHEMATIC ONLY, COMMON & NO_STUFF ASSEMBLY NOTES AND BOM NOT FINAL
PAGE DETAIL	Framebuffer G,H: GPU Section

Micro-Star International Co., LTD.

<Title>

Size	Document Number	Rev
Custom	<Doc>	<RevCode>

Date: Friday, June 05, 2009 | Sheet 7 of 41

Framebuffer A: Memory Section

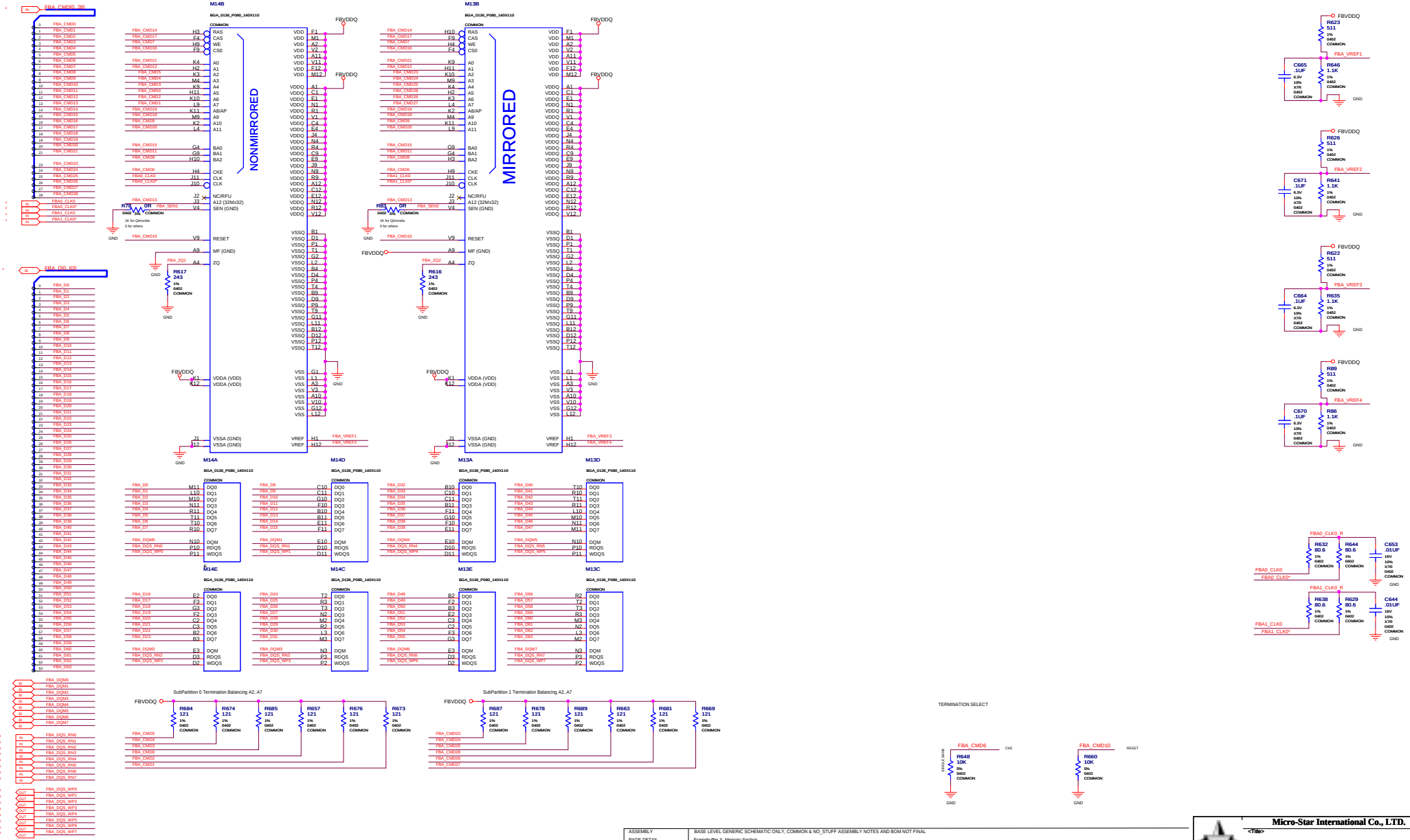

ASSEMBLY	BASE LEVEL GENERIC SCHEMATIC ONLY, COMMON & NO_STUFF ASSEMBLY NOTES AND BOM NOT FINAL
PAGE DETAIL	Framebuffer A: Memory Section

ALL NVIDIA DESIGN SPECIFICATIONS, REFERENCE SPECIFICATIONS, REFERENCE BOARDS, FILES, DRAWINGS, DIAGNOSTICS, LISTS AND OTHER DOCUMENTS OR INFORMATION (TOGETHER AND SEPARATELY, 'MATERIALS') ARE BEING PROVIDED 'AS IS'. THE MATERIALS MAY CONTAIN KNOWN AND UNKNOWN VIOLATIONS OR DEVIATIONS OF INDUSTRY STANDARDS AND SPECIFICATIONS. NVIDIA MAKES NO WARRANTIES, EXPRESSED, IMPLIED, STATUTORY OR OTHERWISE WITH RESPECT TO THE MATERIALS OR OTHERWISE, AND EXPRESSLY DISCLAIMS ALL IMPLIED WARRANTIES INCLUDING, WITHOUT LIMITATION, THE WARRANTIES OF DESIGN, OF NONINFRINGEMENT, MERCHANTABILITY OR FITNESS FOR A PARTICULAR PURPOSE, OR ARISING FROM A COURSE OF DEALING, TRADE USAGE, TRADE PRACTICE, OR INDUSTRY STANDARDS.

Micro-Star International Co., LTD.

<Title>

Size	Document Number	Rev
Custom	<Doc>	<FevCode>

Date: Friday, June 05, 2009 | Sheet 8 of 41

Framebuffer B: Memory Section

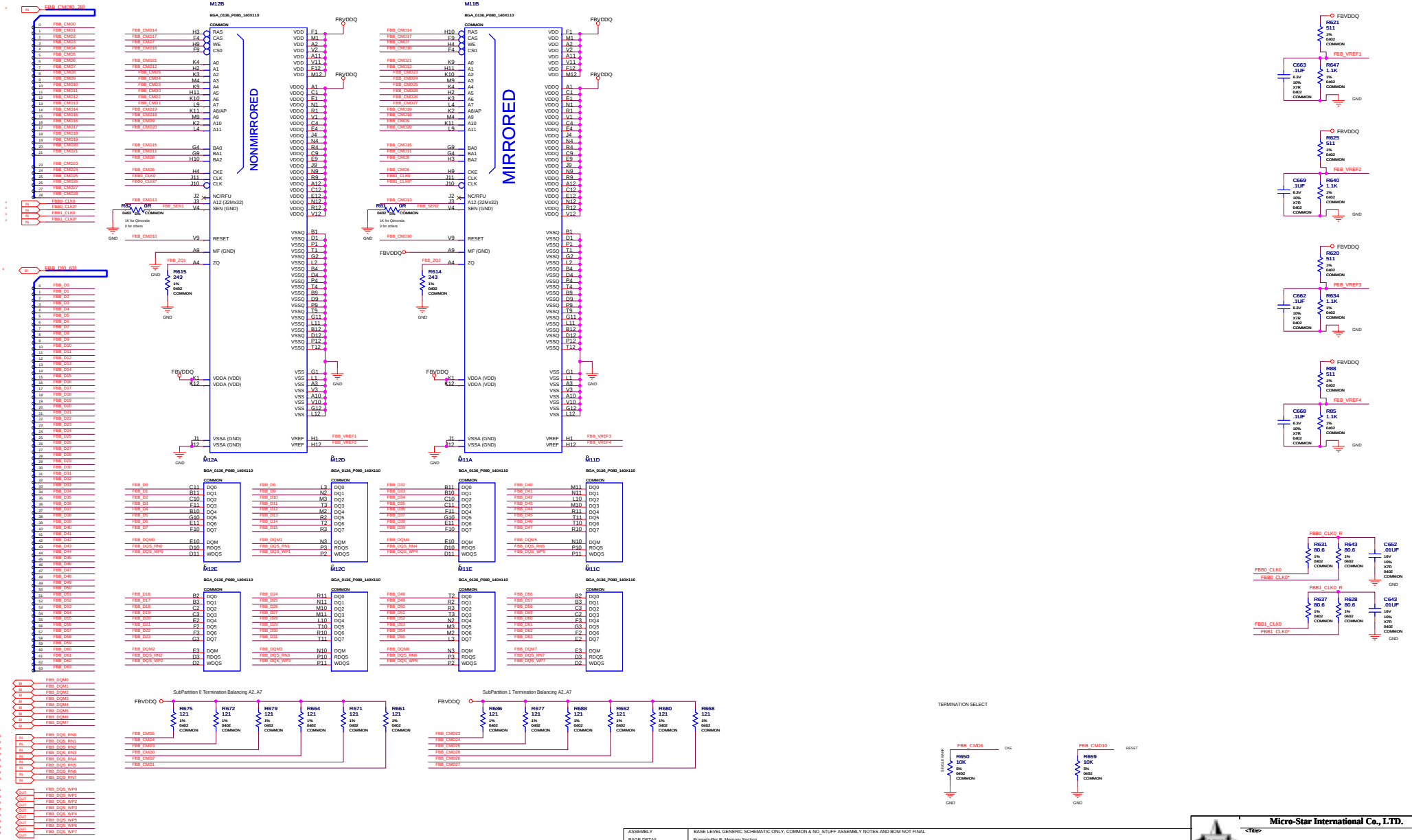

ALL NVIDIA DESIGN SPECIFICATIONS, REFERENCE SPECIFICATIONS, REFERENCE BOARDS, FILES, DRAWINGS, DIAGNOSTICS, LISTS AND OTHER DOCUMENTS OR INFORMATION (TOGETHER AND SEPARATELY, 'MATERIALS') ARE BEING PROVIDED 'AS IS'. THE MATERIALS MAY CONTAIN KNOWN AND UNKNOWN VIOLATIONS OR DEVIATIONS OF INDUSTRY STANDARDS AND SPECIFICATIONS. NVIDIA MAKES NO WARRANTIES, EXPRESSED, IMPLIED, STATUTORY OR OTHERWISE WITH RESPECT TO THE MATERIALS OR OTHERWISE, AND EXPRESSLY DISCLAIMS ALL IMPLIED WARRANTIES INCLUDING, WITHOUT LIMITATION, THE WARRANTIES OF DESIGN, OF NONINFRINGEMENT, MERCHANTABILITY OR FITNESS FOR A PARTICULAR PURPOSE, OR ARISING FROM A COURSE OF DEALING, TRADE USAGE, TRADE PRACTICE, OR INDUSTRY STANDARDS.

ASSEMBLY	BASE LEVEL GENERIC SCHEMATIC ONLY, COMMON & NO_STUFF ASSEMBLY NOTES AND BOM NOT FINAL
PAGE DETAIL	Framebuffer B: Memory Section

Micro-Star International Co., LTD.

<Title>

Size	Document Number	Rev
Custom	<Doc> MS-V180	<RevCode>

Date: Friday, June 05, 2009 Sheet 9 of 41

Framebuffer C: Memory Section

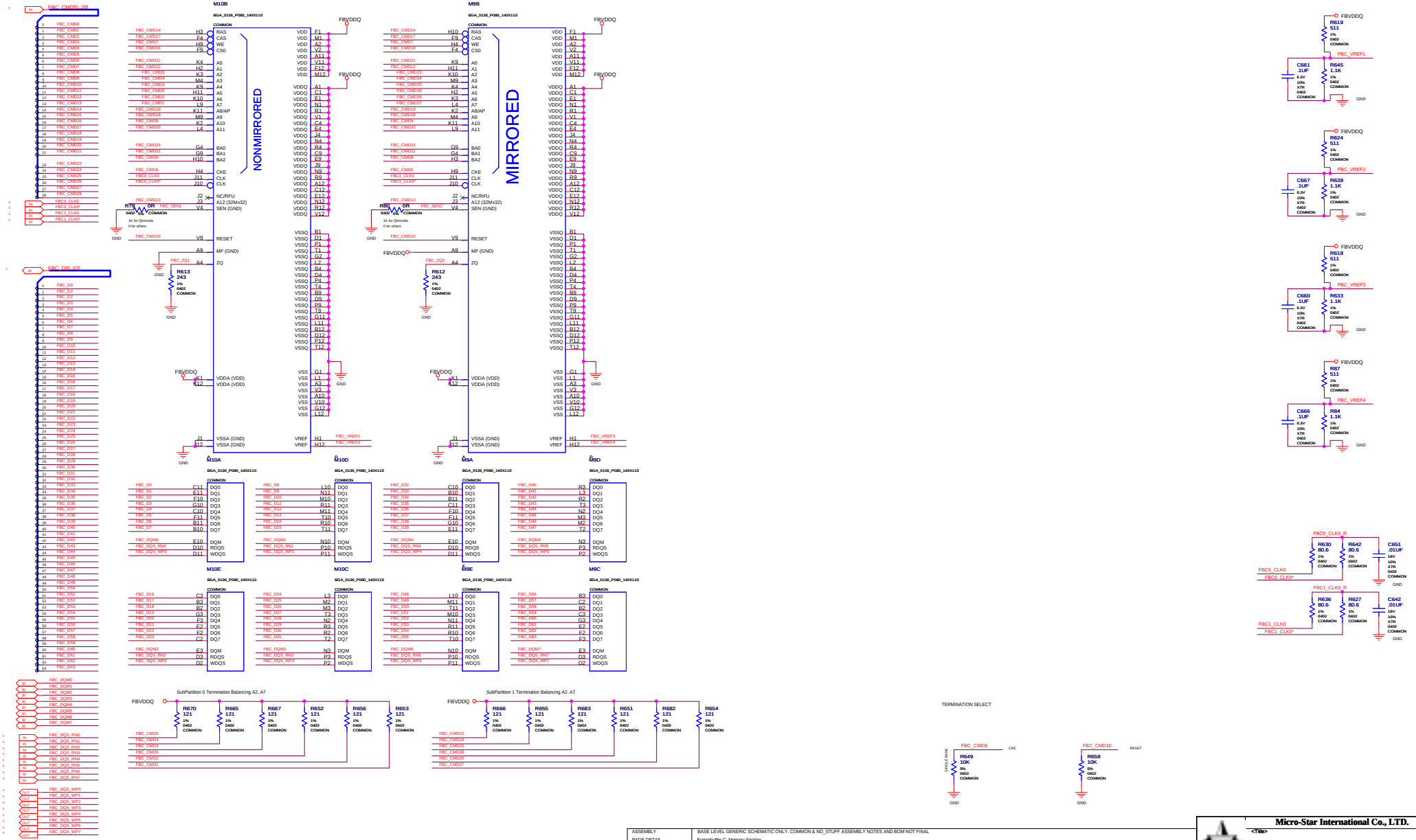

ASSEMBLY	BASE LEVEL GENERIC SCHEMATIC ONLY, COMMON & NO_STUFF ASSEMBLY NOTES AND BOM NOT FINAL
PAGE DETAIL	Framebuffer C: Memory Section

ALL NVIDIA DESIGN SPECIFICATIONS, REFERENCE SPECIFICATIONS, REFERENCE BOARDS, FILES, DRAWINGS, DIAGNOSTICS, LISTS AND OTHER DOCUMENTS OR INFORMATION (TOGETHER AND SEPARATELY, 'MATERIALS') ARE BEING PROVIDED 'AS IS'. THE MATERIALS MAY CONTAIN KNOWN AND UNKNOWN VIOLATIONS OR DEVIATIONS OF INDUSTRY STANDARDS AND SPECIFICATIONS. NVIDIA MAKES NO WARRANTIES, EXPRESSED, IMPLIED, STATUTORY OR OTHERWISE WITH RESPECT TO THE MATERIALS OR OTHERWISE, AND EXPRESSLY DISCLAIMS ALL IMPLIED WARRANTIES INCLUDING, WITHOUT LIMITATION, THE WARRANTIES OF DESIGN, OF NONINFRINGEMENT, MERCHANTABILITY OR FITNESS FOR A PARTICULAR PURPOSE, OR ARISING FROM A COURSE OF DEALING, TRADE USAGE, TRADE PRACTICE, OR INDUSTRY STANDARDS.

Micro-Star International Co., LTD.

<Title>

Size	Document Number	Rev
Custom	<Doc>	<FevCode>

Date: Friday, June 05, 2009 | Sheet 10 of 41

Framebuffer D: Memory Section

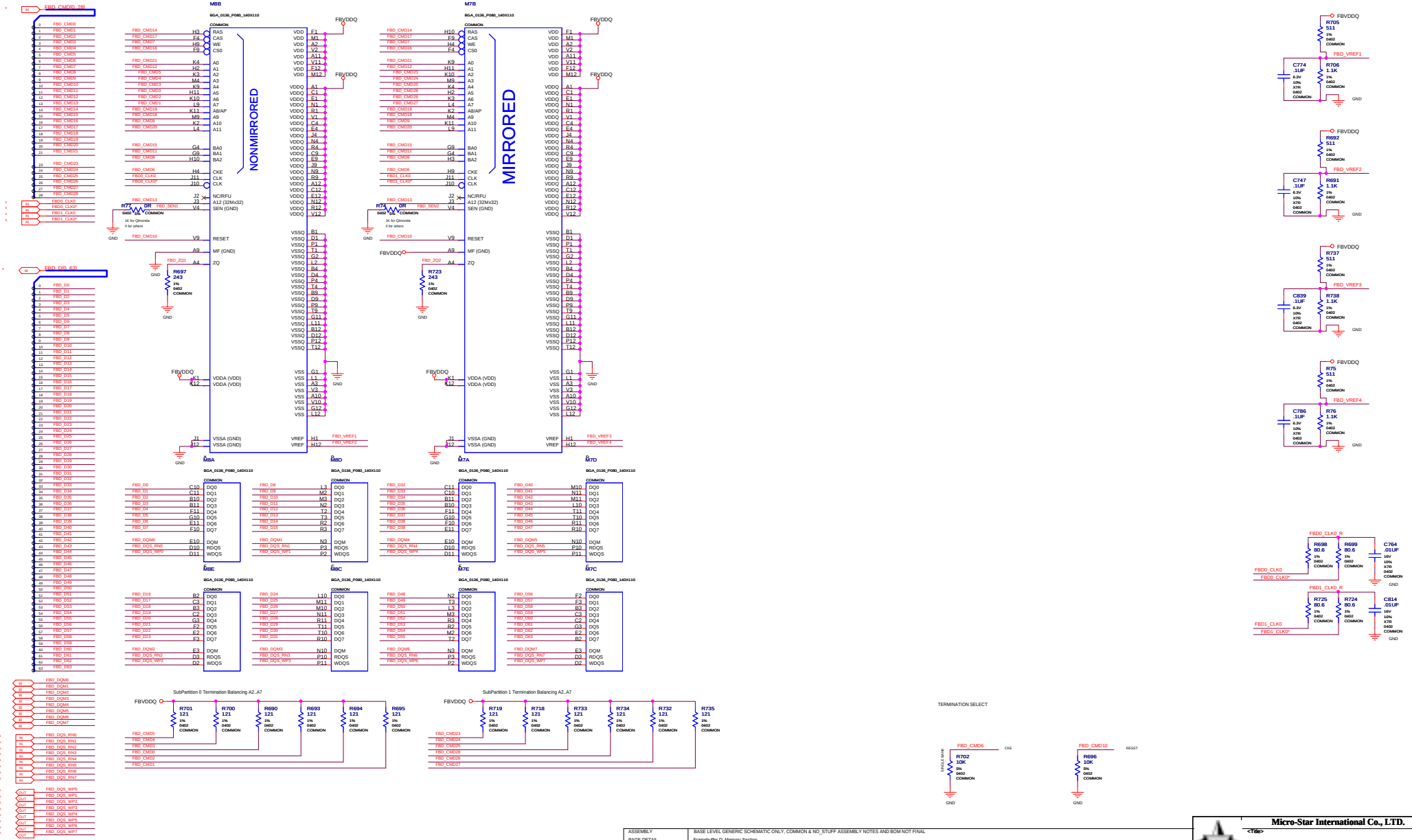

ASSEMBLY	BASE LEVEL GENERIC SCHEMATIC ONLY, COMMON & NO_STUFF ASSEMBLY NOTES AND BOM NOT FINAL
PAGE DETAIL	Framebuffer D: Memory Section

ALL NVIDIA DESIGN SPECIFICATIONS, REFERENCE SPECIFICATIONS, REFERENCE BOARDS, FILES, DRAWINGS, DIAGNOSTICS, LISTS AND OTHER DOCUMENTS OR INFORMATION (TOGETHER AND SEPARATELY, 'MATERIALS') ARE BEING PROVIDED 'AS IS'. THE MATERIALS MAY CONTAIN KNOWN AND UNKNOWN VIOLATIONS OR DEVIATIONS OF INDUSTRY STANDARDS AND SPECIFICATIONS. NVIDIA MAKES NO WARRANTIES, EXPRESSED, IMPLIED, STATUTORY OR OTHERWISE WITH RESPECT TO THE MATERIALS OR OTHERWISE, AND EXPRESSLY DISCLAIMS ALL IMPLIED WARRANTIES INCLUDING, WITHOUT LIMITATION, THE WARRANTIES OF DESIGN, OF NONINFRINGEMENT, MERCHANTABILITY OR FITNESS FOR A PARTICULAR PURPOSE, OR ARISING FROM A COURSE OF DEALING, TRADE USAGE, TRADE PRACTICE, OR INDUSTRY STANDARDS.

Micro-Star International Co., LTD.

<Title>

Size	Document Number	Rev
Custom	<Doc>	<FevCode>

Date: Friday, June 05, 2009 | Sheet 11 of 41

Framebuffer E: Memory Section

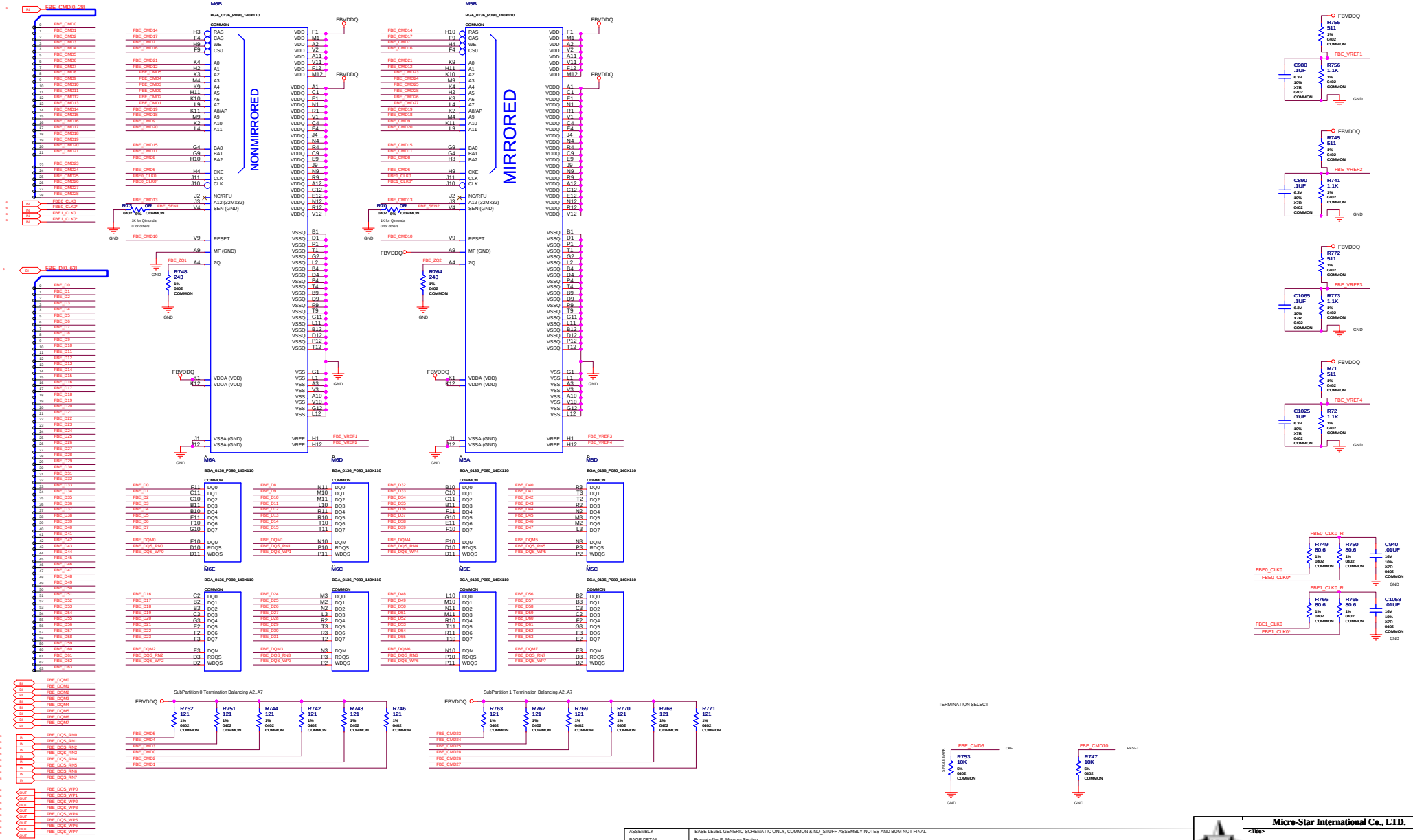

ASSEMBLY	BASE LEVEL GENERIC SCHEMATIC ONLY, COMMON & NO_STUFF ASSEMBLY NOTES AND BOM NOT FINAL
PAGE DETAIL	Framebuffer E: Memory Section

ALL NVIDIA DESIGN SPECIFICATIONS, REFERENCE SPECIFICATIONS, REFERENCE BOARDS, FILES, DRAWINGS, DIAGNOSTICS, LISTS AND OTHER DOCUMENTS OR INFORMATION (TOGETHER AND SEPARATELY, 'MATERIALS') ARE BEING PROVIDED 'AS IS'. THE MATERIALS MAY CONTAIN KNOWN AND UNKNOWN VIOLATIONS OR DEVIATIONS OF INDUSTRY STANDARDS AND SPECIFICATIONS. NVIDIA MAKES NO WARRANTIES, EXPRESSED, IMPLIED, STATUTORY OR OTHERWISE WITH RESPECT TO THE MATERIALS OR OTHERWISE, AND EXPRESSLY DISCLAIMS ALL IMPLIED WARRANTIES INCLUDING, WITHOUT LIMITATION, THE WARRANTIES OF DESIGN, OF NONINFRINGEMENT, MERCHANTABILITY OR FITNESS FOR A PARTICULAR PURPOSE, OR ARISING FROM A COURSE OF DEALING, TRADE USAGE, TRADE PRACTICE, OR INDUSTRY STANDARDS.

Micro-Star International Co., LTD.

<Title>

Size	Document Number	Rev
Custom	<Doc>	<FevCode>

Date: Friday, June 05, 2009 | Sheet 12 of 41

Framebuffer F: Memory Section

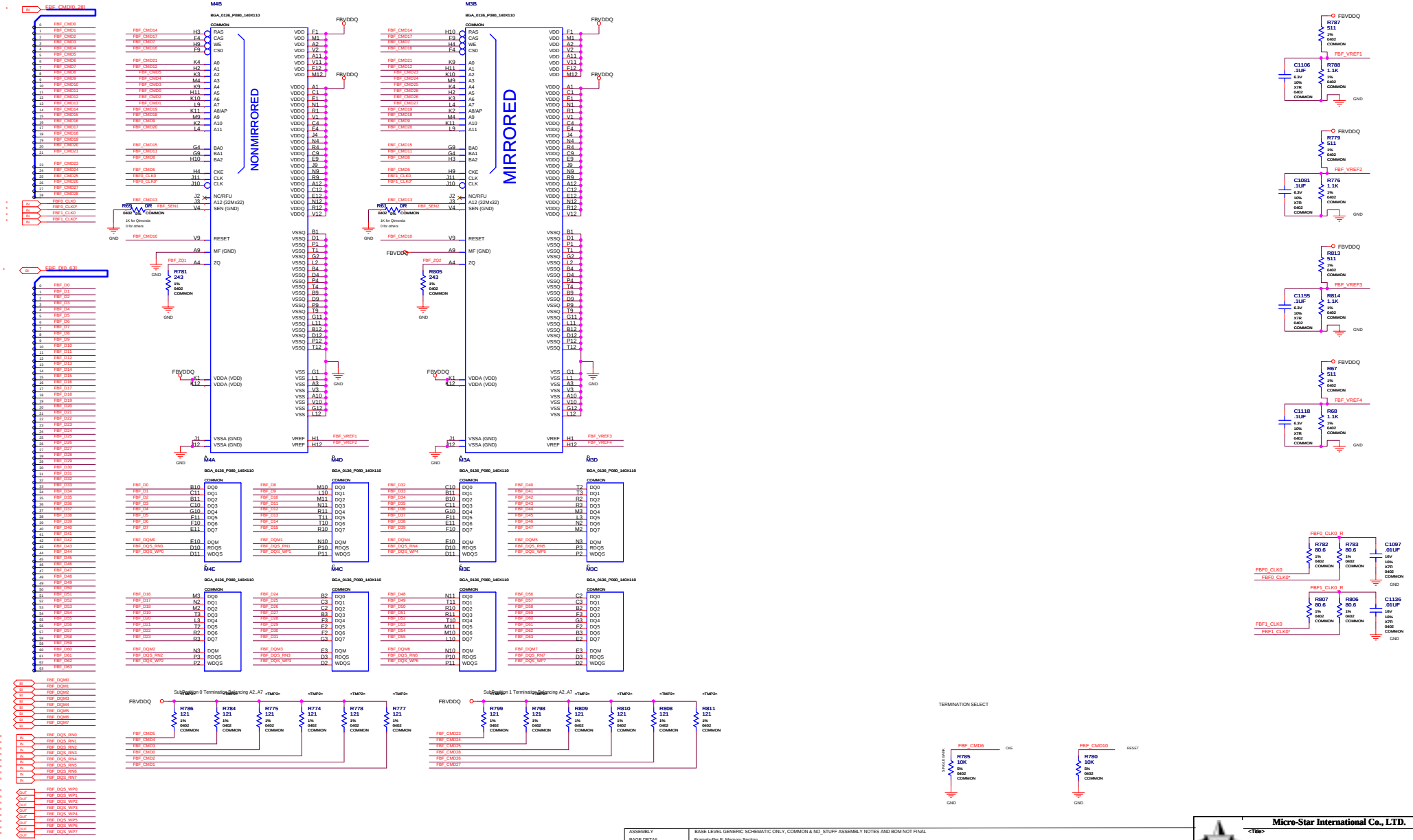

ALL NVIDIA DESIGN SPECIFICATIONS, REFERENCE SPECIFICATIONS, REFERENCE BOARDS, FILES, DRAWINGS, DIAGNOSTICS, LISTS AND OTHER DOCUMENTS OR INFORMATION (TOGETHER AND SEPARATELY, 'MATERIALS') ARE BEING PROVIDED 'AS IS'. THE MATERIALS MAY CONTAIN KNOWN AND UNKNOWN VIOLATIONS OR DEVIATIONS OF INDUSTRY STANDARDS AND SPECIFICATIONS. NVIDIA MAKES NO WARRANTIES, EXPRESSED, IMPLIED, STATUTORY OR OTHERWISE WITH RESPECT TO THE MATERIALS OR OTHERWISE, AND EXPRESSLY DISCLAIMS ALL IMPLIED WARRANTIES INCLUDING, WITHOUT LIMITATION, THE WARRANTIES OF DESIGN, OF NONINFRINGEMENT, MERCHANTABILITY OR FITNESS FOR A PARTICULAR PURPOSE, OR ARISING FROM A COURSE OF DEALING, TRADE USAGE, TRADE PRACTICE, OR INDUSTRY STANDARDS.

ASSEMBLY	BASE LEVEL GENERIC SCHEMATIC ONLY, COMMON & NO_STUFF ASSEMBLY NOTES AND BOM NOT FINAL
PAGE DETAIL	Framebuffer F: Memory Section

Micro-Star International Co., LTD.

<Title>

Size	Document Number	Rev
Custom	<Doc>	<FevCode>

Date: Friday, June 05, 2009 | Sheet 13 of 41

Framebuffer G: Memory Section

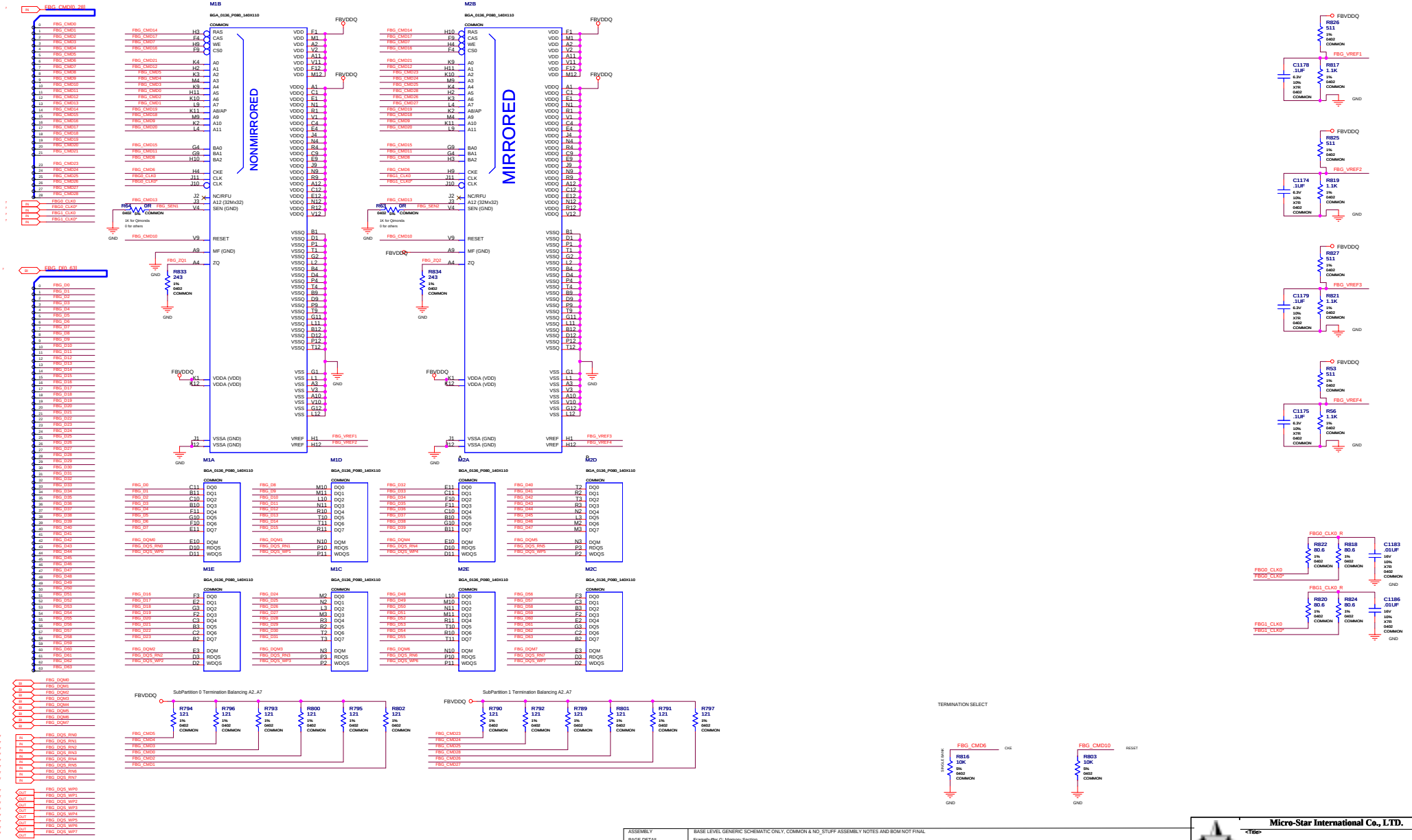

ASSEMBLY	BASE LEVEL GENERIC SCHEMATIC ONLY, COMMON & NO_STUFF ASSEMBLY NOTES AND BOM NOT FINAL
PAGE DETAIL	Framebuffer G: Memory Section

ALL NVIDIA DESIGN SPECIFICATIONS, REFERENCE SPECIFICATIONS, REFERENCE BOARDS, FILES, DRAWINGS, DIAGNOSTICS, LISTS AND OTHER DOCUMENTS OR INFORMATION (TOGETHER AND SEPARATELY, 'MATERIALS') ARE BEING PROVIDED 'AS IS'. THE MATERIALS MAY CONTAIN KNOWN AND UNKNOWN VIOLATIONS OR DEVIATIONS OF INDUSTRY STANDARDS AND SPECIFICATIONS. NVIDIA MAKES NO WARRANTIES, EXPRESSED, IMPLIED, STATUTORY OR OTHERWISE WITH RESPECT TO THE MATERIALS OR OTHERWISE, AND EXPRESSLY DISCLAIMS ALL IMPLIED WARRANTIES INCLUDING, WITHOUT LIMITATION, THE WARRANTIES OF DESIGN, OF NONINFRINGEMENT, MERCHANTABILITY OR FITNESS FOR A PARTICULAR PURPOSE, OR ARISING FROM A COURSE OF DEALING, TRADE USAGE, TRADE PRACTICE, OR INDUSTRY STANDARDS.

Micro-Star International Co., LTD.

<Title>

Size	Document Number	Rev
Custom	<Doc>	<RevCode>

Date: Friday, June 05, 2009 | Sheet 14 of 41

Framebuffer H: N/A

ALL NVIDIA DESIGN SPECIFICATIONS, REFERENCE SPECIFICATIONS, REFERENCE BOARDS, FILES, DRAWINGS, DIAGNOSTICS, LISTS AND OTHER DOCUMENTS OR INFORMATION (TOGETHER AND SEPARATELY, 'MATERIALS') ARE BEING PROVIDED 'AS IS'. THE MATERIALS MAY CONTAIN KNOWN AND UNKNOWN VIOLATIONS OR DEVIATIONS OF INDUSTRY STANDARDS AND SPECIFICATIONS. NVIDIA MAKES NO WARRANTIES, EXPRESSED, IMPLIED, STATUTORY OR OTHERWISE WITH RESPECT TO THE MATERIALS OR OTHERWISE, AND EXPRESSLY DISCLAIMS ALL IMPLIED WARRANTIES INCLUDING, WITHOUT LIMITATION, THE WARRANTIES OF DESIGN, OF NONINFRINGEMENT, MERCHANTABILITY OR FITNESS FOR A PARTICULAR PURPOSE, OR ARISING FROM A COURSE OF DEALING, TRADE USAGE, TRADE PRACTICE, OR INDUSTRY STANDARDS.

ASSEMBLY	BASE LEVEL GENERIC SCHEMATIC ONLY, COMMON & NO_STUFF ASSEMBLY NOTES AND BOM NOT FINAL
PAGE DETAIL	Framebuffer H: N/A

Micro-Star International Co., LTD.

<Title>

Size: Custom	Document Number: <Doc>	Rev: <RevCode>
Date: Friday, June 05, 2009	Sheet 15 of 41	

Decoupling: Memory Section A-D

Banks A-D FBVDD/Q

Combined Distributed Capacitance

280 uF

Decoupling for FBVDDQ

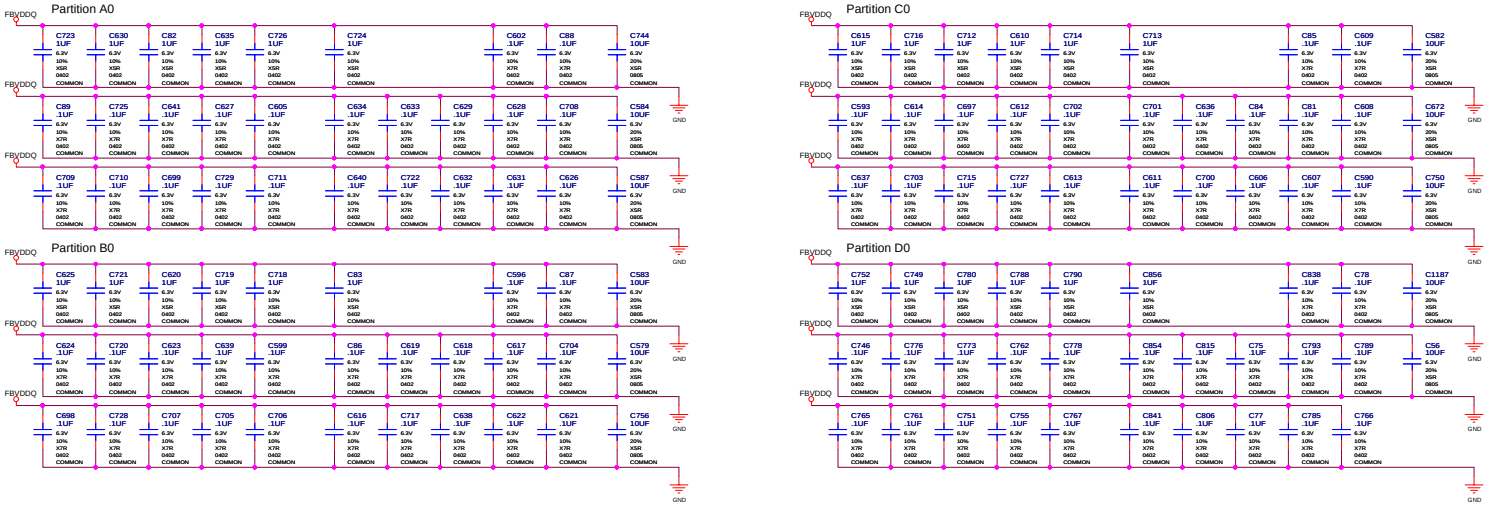

Decoupling for FBVDDQ

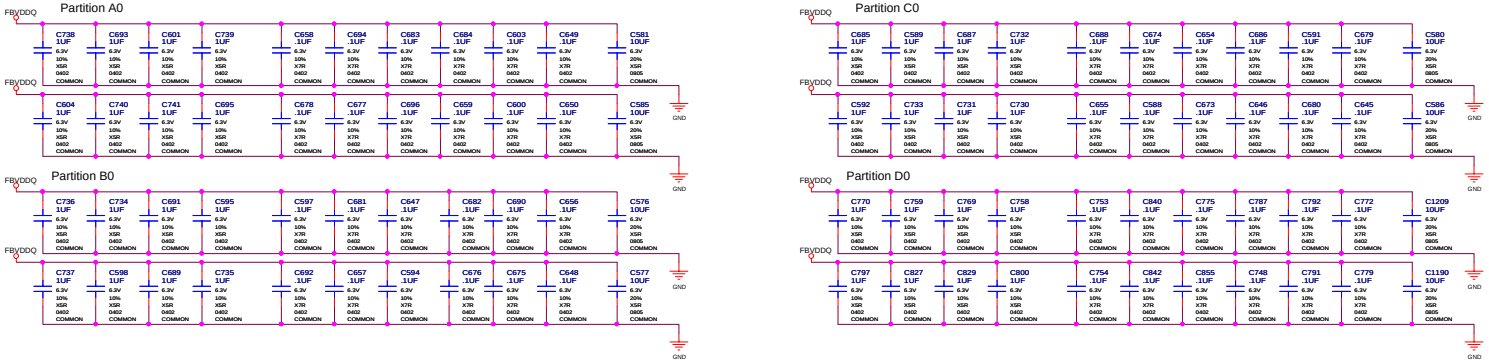

ASSEMBLY	BASE LEVEL GENERIC SCHEMATIC ONLY, COMMON & NO_STUFF ASSEMBLY NOTES AND BOM NOT FINAL
PAGE DETAIL	Decoupling: Memory Section A-D

ALL NVIDIA DESIGN SPECIFICATIONS, REFERENCE SPECIFICATIONS, REFERENCE BOARDS, FILES, DRAWINGS, DIAGNOSTICS, LISTS AND OTHER DOCUMENTS OR INFORMATION (TOGETHER AND SEPARATELY, 'MATERIALS') ARE BEING PROVIDED 'AS IS'. THE MATERIALS MAY CONTAIN KNOWN AND UNKNOWN VIOLATIONS OR DEVIATIONS OF INDUSTRY STANDARDS AND SPECIFICATIONS. NVIDIA MAKES NO WARRANTIES, EXPRESSED, IMPLIED, STATUTORY OR OTHERWISE WITH RESPECT TO THE MATERIALS OR OTHERWISE, AND EXPRESSLY DISCLAIMS ALL IMPLIED WARRANTIES INCLUDING, WITHOUT LIMITATION, THE WARRANTIES OF DESIGN, OF NONINFRINGEMENT, MERCHANTABILITY OR FITNESS FOR A PARTICULAR PURPOSE, OR ARISING FROM A COURSE OF DEALING, TRADE USAGE, TRADE PRACTICE, OR INDUSTRY STANDARDS.

Micro-Star International Co., LTD.

<Title>

Size	Document Number	Rev
Custom	<Doc>	<FevCode>

Date: Friday, June 05, 2009 | Sheet 16 of 41

Decoupling: Memory Section E-G

Banks E-G FBVDD/Q

Combined Distributed Capacitance

210 uF

Decoupling for FBVDDQ

Partition E0

FBVDDQ

C1033 1UF 6.3V 10% X5R 0402 COMMON
C903 1UF 6.3V 10% X5R 0402 COMMON
C1073 1UF 6.3V 10% X5R 0402 COMMON
C892 1UF 6.3V 10% X5R 0402 COMMON
C993 1UF 6.3V 10% X5R 0402 COMMON
C1027 1UF 6.3V 10% X5R 0402 COMMON
C1059 .1UF 6.3V 10% X7R 0402 COMMON
C1071 .1UF 6.3V 10% X7R 0402 COMMON
C80 10UF 6.3V 20% X5R 0805 COMMON

FBVDDQ

C945 .1UF 6.3V 10% X7R 0402 COMMON
C889 .1UF 6.3V 10% X7R 0402 COMMON
C947 .1UF 6.3V 10% X7R 0402 COMMON
C982 .1UF 6.3V 10% X7R 0402 COMMON
C991 .1UF 6.3V 10% X7R 0402 COMMON
C1057 .1UF 6.3V 10% X7R 0402 COMMON
C1036 .1UF 6.3V 10% X7R 0402 COMMON
C72 .1UF 6.3V 10% X7R 0402 COMMON
C1064 .1UF 6.3V 10% X7R 0402 COMMON
C1067 .1UF 6.3V 10% X7R 0402 COMMON
C79 10UF 6.3V 20% X5R 0805 COMMON

GND

FBVDDQ

C893 .1UF 6.3V 10% X7R 0402 COMMON
C1024 .1UF 6.3V 10% X7R 0402 COMMON
C979 .1UF 6.3V 10% X7R 0402 COMMON
C930 .1UF 6.3V 10% X7R 0402 COMMON
C946 .1UF 6.3V 10% X7R 0402 COMMON
C1030 .1UF 6.3V 10% X7R 0402 COMMON
C73 .1UF 6.3V 10% X7R 0402 COMMON
C74 .1UF 6.3V 10% X7R 0402 COMMON
C906 .1UF 6.3V 10% X7R 0402 COMMON
C929 .1UF 6.3V 10% X7R 0402 COMMON
C869 10UF 6.3V 20% X5R 0805 COMMON

GND

Partition F0

FBVDDQ

C1087 1UF 6.3V 10% X5R 0402 COMMON
C1083 1UF 6.3V 10% X5R 0402 COMMON
C1117 1UF 6.3V 10% X5R 0402 COMMON
C1113 1UF 6.3V 10% X5R 0402 COMMON
C1168 1UF 6.3V 10% X5R 0402 COMMON
C1120 1UF 6.3V 10% X5R 0402 COMMON
C68 .1UF 6.3V 10% X7R 0402 COMMON
C1157 .1UF 6.3V 10% X7R 0402 COMMON
C742 10UF 6.3V 20% X5R 0805 COMMON

FBVDDQ

C1099 .1UF 6.3V 10% X7R 0402 COMMON
C1084 .1UF 6.3V 10% X7R 0402 COMMON
C1095 .1UF 6.3V 10% X7R 0402 COMMON
C1100 .1UF 6.3V 10% X7R 0402 COMMON
C1111 .1UF 6.3V 10% X7R 0402 COMMON
C1122 .1UF 6.3V 10% X7R 0402 COMMON
C1125 .1UF 6.3V 10% X7R 0402 COMMON
C63 .1UF 6.3V 10% X7R 0402 COMMON
C1154 .1UF 6.3V 10% X7R 0402 COMMON
C1166 .1UF 6.3V 10% X7R 0402 COMMON
C1173 10UF 6.3V 20% X5R 0805 COMMON

GND

FBVDDQ

C1094 .1UF 6.3V 10% X7R 0402 COMMON
C1080 .1UF 6.3V 10% X7R 0402 COMMON
C1090 .1UF 6.3V 10% X7R 0402 COMMON
C1105 .1UF 6.3V 10% X7R 0402 COMMON
C1101 .1UF 6.3V 10% X7R 0402 COMMON
C1121 .1UF 6.3V 10% X7R 0402 COMMON
C70 .1UF 6.3V 10% X7R 0402 COMMON
C1131 .1UF 6.3V 10% X7R 0402 COMMON
C1137 .1UF 6.3V 10% X7R 0402 COMMON
C1108 .1UF 6.3V 10% X7R 0402 COMMON
C1076 10UF 6.3V 20% X5R 0805 COMMON

GND

Partition G0

FBVDDQ

C1143 1UF 6.3V 10% X5R 0402 COMMON
C1140 1UF 6.3V 10% X5R 0402 COMMON
C1192 1UF 6.3V 10% X5R 0402 COMMON
C1197 1UF 6.3V 10% X5R 0402 COMMON
C1142 1UF 6.3V 10% X5R 0402 COMMON
C1144 1UF 6.3V 10% X5R 0402 COMMON
C1150 .1UF 6.3V 10% X7R 0402 COMMON
C1204 .1UF 6.3V 10% X7R 0402 COMMON
C49 10UF 6.3V 20% X5R 0805 COMMON

FBVDDQ

C1198 .1UF 6.3V 10% X7R 0402 COMMON
C1147 .1UF 6.3V 10% X7R 0402 COMMON
C1152 .1UF 6.3V 10% X7R 0402 COMMON
C1201 .1UF 6.3V 10% X7R 0402 COMMON
C1195 .1UF 6.3V 10% X7R 0402 COMMON
C65 .1UF 6.3V 10% X7R 0402 COMMON
C1199 .1UF 6.3V 10% X7R 0402 COMMON
C1200 .1UF 6.3V 10% X7R 0402 COMMON
C66 .1UF 6.3V 10% X7R 0402 COMMON
C1148 .1UF 6.3V 10% X7R 0402 COMMON
C1176 10UF 6.3V 20% X5R 0805 COMMON

GND

FBVDDQ

C1202 .1UF 6.3V 10% X7R 0402 COMMON
C1141 .1UF 6.3V 10% X7R 0402 COMMON
C1139 .1UF 6.3V 10% X7R 0402 COMMON
C1194 .1UF 6.3V 10% X7R 0402 COMMON
C1188 .1UF 6.3V 10% X7R 0402 COMMON
C64 .1UF 6.3V 10% X7R 0402 COMMON
C1196 .1UF 6.3V 10% X7R 0402 COMMON
C1149 .1UF 6.3V 10% X7R 0402 COMMON
C1189 .1UF 6.3V 10% X7R 0402 COMMON
C1193 .1UF 6.3V 10% X7R 0402 COMMON
C1171 10UF 6.3V 20% X5R 0805 COMMON

GND

Decoupling for FBVDDQ

Partition E0

FBVDDQ

C1048 1UF 6.3V 10% X5R 0402 COMMON
C1063 1UF 6.3V 10% X5R 0402 COMMON
C917 1UF 6.3V 10% X5R 0402 COMMON
C965 1UF 6.3V 10% X5R 0402 COMMON
C992 .1UF 6.3V 10% X7R 0402 COMMON
C1068 .1UF 6.3V 10% X7R 0402 COMMON
C1072 .1UF 6.3V 10% X7R 0402 COMMON
C1035 .1UF 6.3V 10% X7R 0402 COMMON
C904 .1UF 6.3V 10% X7R 0402 COMMON
C905 .1UF 6.3V 10% X7R 0402 COMMON
C743 10UF 6.3V 20% X5R 0805 COMMON

FBVDDQ

C916 1UF 6.3V 10% X5R 0402 COMMON
C966 1UF 6.3V 10% X5R 0402 COMMON
C1047 1UF 6.3V 10% X5R 0402 COMMON
C1061 1UF 6.3V 10% X5R 0402 COMMON
C983 .1UF 6.3V 10% X7R 0402 COMMON
C1066 .1UF 6.3V 10% X7R 0402 COMMON
C1026 .1UF 6.3V 10% X7R 0402 COMMON
C1034 .1UF 6.3V 10% X7R 0402 COMMON
C981 .1UF 6.3V 10% X7R 0402 COMMON
C891 .1UF 6.3V 10% X7R 0402 COMMON
C868 10UF 6.3V 20% X5R 0805 COMMON

GND

Partition F0

FBVDDQ

C1167 1UF 6.3V 10% X5R 0402 COMMON
C1092 1UF 6.3V 10% X5R 0402 COMMON
C1093 1UF 6.3V 10% X5R 0402 COMMON
C1103 1UF 6.3V 10% X5R 0402 COMMON
C1082 .1UF 6.3V 10% X7R 0402 COMMON
C1123 .1UF 6.3V 10% X7R 0402 COMMON
C1124 .1UF 6.3V 10% X7R 0402 COMMON
C1126 .1UF 6.3V 10% X7R 0402 COMMON
C1158 .1UF 6.3V 10% X7R 0402 COMMON
C1107 .1UF 6.3V 10% X7R 0402 COMMON
C1172 10UF 6.3V 20% X5R 0805 COMMON

FBVDDQ

C1151 1UF 6.3V 10% X5R 0402 COMMON
C1146 1UF 6.3V 10% X5R 0402 COMMON
C1102 1UF 6.3V 10% X5R 0402 COMMON
C1128 1UF 6.3V 10% X5R 0402 COMMON
C1109 .1UF 6.3V 10% X7R 0402 COMMON
C1112 .1UF 6.3V 10% X7R 0402 COMMON
C1119 .1UF 6.3V 10% X7R 0402 COMMON
C1089 .1UF 6.3V 10% X7R 0402 COMMON
C1088 .1UF 6.3V 10% X7R 0402 COMMON
C1156 .1UF 6.3V 10% X7R 0402 COMMON

GND

Partition G0

FBVDDQ

C1206 1UF 6.3V 10% X5R 0402 COMMON
C1132 1UF 6.3V 10% X5R 0402 COMMON
C1135 1UF 6.3V 10% X5R 0402 COMMON
C1163 1UF 6.3V 10% X5R 0402 COMMON
C1161 .1UF 6.3V 10% X7R 0402 COMMON
C1184 .1UF 6.3V 10% X7R 0402 COMMON
C1162 .1UF 6.3V 10% X7R 0402 COMMON
C1170 .1UF 6.3V 10% X7R 0402 COMMON
C1160 .1UF 6.3V 10% X7R 0402 COMMON
C1208 .1UF 6.3V 10% X7R 0402 COMMON
C1115 10UF 6.3V 20% X5R 0805 COMMON

FBVDDQ

C1207 1UF 6.3V 10% X5R 0402 COMMON
C1133 1UF 6.3V 10% X5R 0402 COMMON
C1134 1UF 6.3V 10% X5R 0402 COMMON
C1205 1UF 6.3V 10% X5R 0402 COMMON
C1169 .1UF 6.3V 10% X7R 0402 COMMON
C1165 .1UF 6.3V 10% X7R 0402 COMMON
C1185 .1UF 6.3V 10% X7R 0402 COMMON
C1182 .1UF 6.3V 10% X7R 0402 COMMON
C1164 .1UF 6.3V 10% X7R 0402 COMMON
C1181 .1UF 6.3V 10% X7R 0402 COMMON
C1210 10UF 6.3V 20% X5R 0805 COMMON

GND

ASSEMBLY	BASE LEVEL GENERIC SCHEMATIC ONLY, COMMON & NO_STUFF ASSEMBLY NOTES AND BOM NOT FINAL
PAGE DETAIL	Decoupling: Memory Section E-G

ALL NVIDIA DESIGN SPECIFICATIONS, REFERENCE SPECIFICATIONS, REFERENCE BOARDS, FILES, DRAWINGS, DIAGNOSTICS, LISTS AND OTHER DOCUMENTS OR INFORMATION (TOGETHER AND SEPARATELY, 'MATERIALS') ARE BEING PROVIDED 'AS IS'. THE MATERIALS MAY CONTAIN KNOWN AND UNKNOWN VIOLATIONS OR DEVIATIONS OF INDUSTRY STANDARDS AND SPECIFICATIONS. NVIDIA MAKES NO WARRANTIES, EXPRESSED, IMPLIED, STATUTORY OR OTHERWISE WITH RESPECT TO THE MATERIALS OR OTHERWISE, AND EXPRESSLY DISCLAIMS ALL IMPLIED WARRANTIES INCLUDING, WITHOUT LIMITATION, THE WARRANTIES OF DESIGN, OF NONINFRINGEMENT, MERCHANTABILITY OR FITNESS FOR A PARTICULAR PURPOSE, OR ARISING FROM A COURSE OF DEALING, TRADE USAGE, TRADE PRACTICE, OR INDUSTRY STANDARDS.

Micro-Star International Co., LTD.

<Title>

Size	Document Number	Rev
Custom	<Doc>	<RevCode>

Date: Friday, June 05, 2009 Sheet 17 of 41

Decoupling: GPU (NVVDD, FBVDDQ)

Decoupling for NVVDD (under GPU)

GPU - NVVDD

Combined Distributed Capacitance

494 uF

NVVDD 6 x 4700pF 0402

C918 4700PF 25V 10% X7R 0402 COMMON
C931 4700PF 25V 10% X7R 0402 COMMON
C927 4700PF 25V 10% X7R 0402 COMMON
C911 4700PF 25V 10% X7R 0603 COMMON

NVVDD 10 x 10nF 0402

C950 .01UF 16V 10% X7R 0402 COMMON
C885 .01UF 16V 10% X7R 0402 COMMON
C951 .01UF 16V 10% X7R 0402 COMMON
C908 .01UF 16V 10% X7R 0402 COMMON
C886 .01UF 16V 10% X7R 0402 COMMON
C926 .01UF 16V 10% X7R 0402 COMMON
C934 .01UF 16V 10% X7R 0402 COMMON
C919 .01UF 16V 10% X7R 0402 COMMON
C954 .01UF 16V 10% X7R 0402 COMMON
C881 .01UF 16V 10% X7R 0402 COMMON

NVVDD 10 x 22nF 0402

C957 .022UF 16V 10% X7R 0402 COMMON
C952 .022UF 16V 10% X7R 0402 COMMON
C877 .022UF 16V 10% X7R 0402 COMMON
C830 .022UF 16V 10% X7R 0402 COMMON
C871 .022UF 16V 10% X7R 0402 COMMON
C888 .022UF 16V 10% X7R 0402 COMMON
C851 .022UF 16V 10% X7R 0402 COMMON
C960 .022UF 16V 10% X7R 0402 COMMON
C883 .022UF 16V 10% X7R 0402 COMMON
C897 .022UF 16V 10% X7R 0402 COMMON

NVVDD 10 x 47nF 0402

C959 .047UF 16V 10% X7R 0402 COMMON
C1007 .047UF 16V 10% X7R 0402 COMMON
C873 .047UF 16V 10% X7R 0402 COMMON
C1008 .047UF 16V 10% X7R 0402 COMMON
C972 .047UF 16V 10% X7R 0402 COMMON
C958 .047UF 16V 10% X7R 0402 COMMON
C976 .047UF 16V 10% X7R 0402 COMMON
C875 .047UF 16V 10% X7R 0402 COMMON
C989 .047UF 16V 10% X7R 0402 COMMON
C850 .047UF 16V 10% X7R 0402 COMMON

NVVDD 17 x 0.1uF 0402

C948 .1UF 6.3V 10% X7R 0402 COMMON
C962 .1UF 6.3V 10% X7R 0402 COMMON
C898 .1UF 6.3V 10% X7R 0402 COMMON
C987 .1UF 6.3V 10% X7R 0402 COMMON
C874 .1UF 6.3V 10% X7R 0402 COMMON
C970 .1UF 6.3V 10% X7R 0402 COMMON
C844 .1UF 6.3V 10% X7R 0402 COMMON
C884 .1UF 6.3V 10% X7R 0402 COMMON
C937 .1UF 6.3V 10% X7R 0402 COMMON
C953 .1UF 6.3V 10% X7R 0402 COMMON
C961 .1UF 6.3V 10% X7R 0402 COMMON
C1002 .1UF 6.3V 10% X7R 0402 COMMON
C887 .1UF 6.3V 10% X7R 0402 COMMON
C949 .1UF 6.3V 10% X7R 0402 COMMON
C843 .1UF 6.3V 10% X7R 0402 COMMON
C973 .1UF 6.3V 10% X7R 0402 COMMON
C1001 .1UF 6.3V 10% X7R 0402 COMMON

NVVDD 5 x 0.22uF 0402

C831 .22UF 6.3V 10% X5R 0402 COMMON
C888 .22UF 6.3V 10% X5R 0402 COMMON
C1000 .22UF 6.3V 10% X5R 0402 COMMON
C975 .22UF 6.3V 10% X5R 0402 COMMON
C963 .22UF 6.3V 10% X5R 0402 COMMON

NVVDD 5 x 0.47uF 0402

C974 .47UF 6.3V 10% X5R 0402 COMMON
C1009 .47UF 6.3V 10% X5R 0402 COMMON
C938 .47UF 6.3V 10% X5R 0402 COMMON
C852 .47UF 6.3V 10% X5R 0402 COMMON
C1013 .47UF 6.3V 10% X5R 0402 COMMON

NVVDD 8 x 1uF 0402

C971 1UF 6.3V 10% X5R 0402 COMMON
C1012 1UF 6.3V 10% X5R 0402 COMMON
C872 1UF 6.3V 10% X5R 0402 COMMON
C824 1UF 6.3V 10% X5R 0402 COMMON
C1014 1UF 6.3V 10% X5R 0402 COMMON
C876 1UF 6.3V 10% X5R 0402 COMMON
C1017 1UF 6.3V 10% X5R 0402 COMMON
C811 1UF 6.3V 10% X5R 0402 COMMON

NVVDD 8 x 4.7uF 0603

C853 4.7UF 6.3V 10% X5R 0603 COMMON
C833 4.7UF 6.3V 10% X5R 0603 COMMON
C848 4.7UF 6.3V 10% X5R 0603 COMMON
C1006 4.7UF 6.3V 10% X5R 0603 COMMON
C1011 4.7UF 6.3V 10% X5R 0603 COMMON
C995 4.7UF 6.3V 10% X5R 0603 COMMON
C828 4.7UF 6.3V 10% X5R 0603 COMMON
C994 4.7UF 6.3V 10% X5R 0603 COMMON

NVVDD 6 x 47uF 1206

C760 47UF 6.3V 20% X5R 1206 COMMON
C880 47UF 6.3V 20% X5R 1206 COMMON
C763 47UF 6.3V 20% X5R 1206 COMMON
C745 47UF 6.3V 20% X5R 1206 COMMON
C1086 47UF 6.3V 20% X5R 1206 COMMON
C791 47UF 6.3V 20% X5R 1206 COMMON

GND

Decoupling for FBVDDQ (under GPU)

GPU - FBVDD/Q

Combined Distributed Capacitance

230 uF

FBVDDQ 8 x 0.1uF 0402

C1003 .1UF 6.3V 10% X7R 0402 COMMON
C977 .1UF 6.3V 10% X7R 0402 COMMON
C818 .1UF 6.3V 10% X7R 0402 COMMON
C807 .1UF 6.3V 10% X7R 0402 COMMON
C822 .1UF 6.3V 10% X7R 0402 COMMON
C1043 .1UF 6.3V 10% X7R 0402 COMMON
C1022 .1UF 6.3V 10% X7R 0402 COMMON
C1021 .1UF 6.3V 10% X7R 0402 COMMON

FBVDDQ 10 x 1uF 0402

C955 1UF 6.3V 10% X5R 0402 COMMON
C912 1UF 6.3V 10% X5R 0402 COMMON
C820 1UF 6.3V 10% X5R 0402 COMMON
C808 1UF 6.3V 10% X5R 0402 COMMON
C825 1UF 6.3V 10% X5R 0402 COMMON
C812 1UF 6.3V 10% X5R 0402 COMMON
C900 1UF 6.3V 10% X5R 0402 COMMON
C1020 1UF 6.3V 10% X5R 0402 COMMON
C835 1UF 6.3V 10% X5R 0402 COMMON
C858 1UF 6.3V 10% X5R 0402 COMMON

FBVDDQ 15 x 0.47uF 0402

C882 .47UF 6.3V 10% X5R 0402 COMMON
C865 .47UF 6.3V 10% X5R 0402 COMMON
C1016 .47UF 6.3V 10% X5R 0402 COMMON
C1049 .47UF 6.3V 10% X5R 0402 COMMON
C925 .47UF 6.3V 10% X5R 0402 COMMON
C1019 .47UF 6.3V 10% X5R 0402 COMMON
C878 .47UF 6.3V 10% X5R 0402 COMMON
C968 .47UF 6.3V 10% X5R 0402 COMMON
C941 .47UF 6.3V 10% X5R 0402 COMMON
C1041 .47UF 6.3V 10% X5R 0402 COMMON
C986 .47UF 6.3V 10% X5R 0402 COMMON
C1038 .47UF 6.3V 10% X5R 0402 COMMON
C1023 .47UF 6.3V 10% X5R 0402 COMMON
C1039 .47UF 6.3V 10% X5R 0402 COMMON
C809 .47UF 6.3V 10% X5R 0402 COMMON

FBVDDQ 5 x 4.7uF 0603

C1046 4.7UF 6.3V 10% X5R 0603 COMMON
C1051 4.7UF 6.3V 10% X5R 0603 COMMON
C578 4.7UF 6.3V 10% X5R 0603 COMMON
C796 4.7UF 6.3V 10% X5R 0603 COMMON
C795 4.7UF 6.3V 10% X5R 0603 COMMON

FBVDDQ 4 x 47uF 1206

C768 47UF 6.3V 20% X5R 1206 COMMON
C1079 47UF 6.3V 20% X5R 1206 COMMON
C823 47UF 6.3V 20% X5R 1206 COMMON
C1078 47UF 6.3V 20% X5R 1206 COMMON

FBVDDQ 5 x 0.47uF 0402

C817 .47UF 6.3V 10% X5R 0402 COMMON
C794 .47UF 6.3V 10% X5R 0402 COMMON
C805 .47UF 6.3V 10% X5R 0402 COMMON
C1029 .47UF 6.3V 10% X5R 0402 COMMON
C1045 .47UF 6.3V 10% X5R 0402 COMMON

GND

16 x 10uF 0805

NVVDD

C923 22UF 6.3V 20% X5R 0805 COMMON
C921 22UF 6.3V 20% X5R 0805 COMMON
C1004 22UF 6.3V 20% X5R 0805 COMMON
C837 22UF 6.3V 20% X5R 0805 COMMON
C1069 10UF 6.3V 20% X5R 0805 COMMON
C1044 10UF 6.3V 20% X5R 0805 COMMON
C757 10UF 6.3V 20% X5R 0805 COMMON
C1070 10UF 6.3V 20% X5R 0805 COMMON
C777 22UF 6.3V 20% X5R 0805 COMMON
C907 22UF 6.3V 20% X5R 0805 COMMON
C1005 22UF 6.3V 20% X5R 0805 COMMON
C836 22UF 6.3V 20% X5R 0805 COMMON
C850 10UF 6.3V 20% X5R 0805 COMMON
C1077 10UF 6.3V 20% X5R 0805 COMMON
C771 10UF 6.3V 20% X5R 0805 COMMON
C782 10UF 6.3V 20% X5R 0805 COMMON

GND

ASSEMBLY	BASE LEVEL GENERIC SCHEMATIC ONLY, COMMON & NO_STUFF ASSEMBLY NOTES AND BOM NOT FINAL
PAGE DETAIL	Decoupling: GPU (NVVDD, FBVDDQ)

ALL NVIDIA DESIGN SPECIFICATIONS, REFERENCE SPECIFICATIONS, REFERENCE BOARDS, FILES, DRAWINGS, DIAGNOSTICS, LISTS AND OTHER DOCUMENTS OR INFORMATION (TOGETHER AND SEPARATELY, 'MATERIALS') ARE BEING PROVIDED 'AS IS'. THE MATERIALS MAY CONTAIN KNOWN AND UNKNOWN VIOLATIONS OR DEVIATIONS OF INDUSTRY STANDARDS AND SPECIFICATIONS. NVIDIA MAKES NO WARRANTIES, EXPRESSED, IMPLIED, STATUTORY OR OTHERWISE WITH RESPECT TO THE MATERIALS OR OTHERWISE, AND EXPRESSLY DISCLAIMS ALL IMPLIED WARRANTIES INCLUDING, WITHOUT LIMITATION, THE WARRANTIES OF DESIGN, OF NONINFRINGEMENT, MERCHANTABILITY OR FITNESS FOR A PARTICULAR PURPOSE, OR ARISING FROM A COURSE OF DEALING, TRADE USAGE, TRADE PRACTICE, OR INDUSTRY STANDARDS.

GPU-NVIO Interconnect: GV Bus / PLL

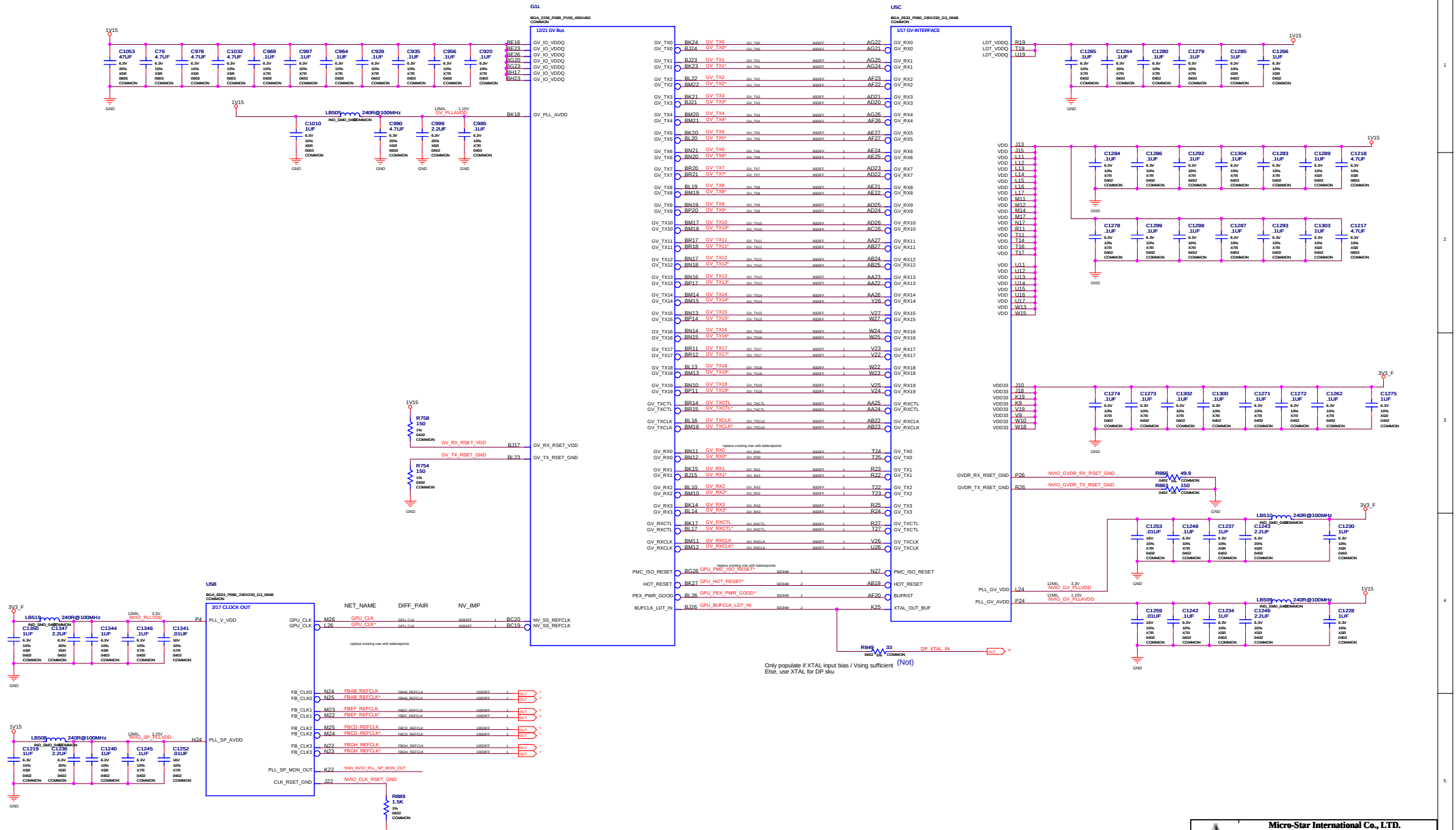

ALL NVIDIA DESIGN SPECIFICATIONS, REFERENCE SPECIFICATIONS, REFERENCE BOARDS, FILES, DRAWINGS, DIAGNOSTICS, LISTS AND OTHER DOCUMENTS OR INFORMATION (TOGETHER AND SEPARATELY, 'MATERIALS') ARE BEING PROVIDED 'AS IS'. THE MATERIALS MAY CONTAIN KNOWN AND UNKNOWN VIOLATIONS OR DEVIATIONS OF INDUSTRY STANDARDS AND SPECIFICATIONS. NVIDIA MAKES NO WARRANTIES, EXPRESSED, IMPLIED, STATUTORY OR OTHERWISE WITH RESPECT TO THE MATERIALS OR OTHERWISE, AND EXPRESSLY DISCLAIMS ALL IMPLIED WARRANTIES INCLUDING, WITHOUT LIMITATION, THE WARRANTIES OF DESIGN, OF NONINFRINGEMENT, MERCHANTABILITY OR FITNESS FOR A PARTICULAR PURPOSE, OR ARISING FROM A COURSE OF DEALING, TRADE USAGE, TRADE PRACTICE, OR INDUSTRY STANDARDS.

ASSEMBLY	BASE LEVEL GENERIC SCHEMATIC ONLY, COMMON & NO_STUFF ASSEMBLY NOTES AND BOM NOT FINAL
PAGE DETAIL	GPU-NVIO Interconnect: GV Bus / PLL

Micro-Star International Co., LTD.

<Title>

Size	Document Number	Rev
Custom	<Doc>	<FavCode>

Date: Friday, June 05, 2009 | Sheet 19 of 41

Display: DACA (Middle DVI-I)

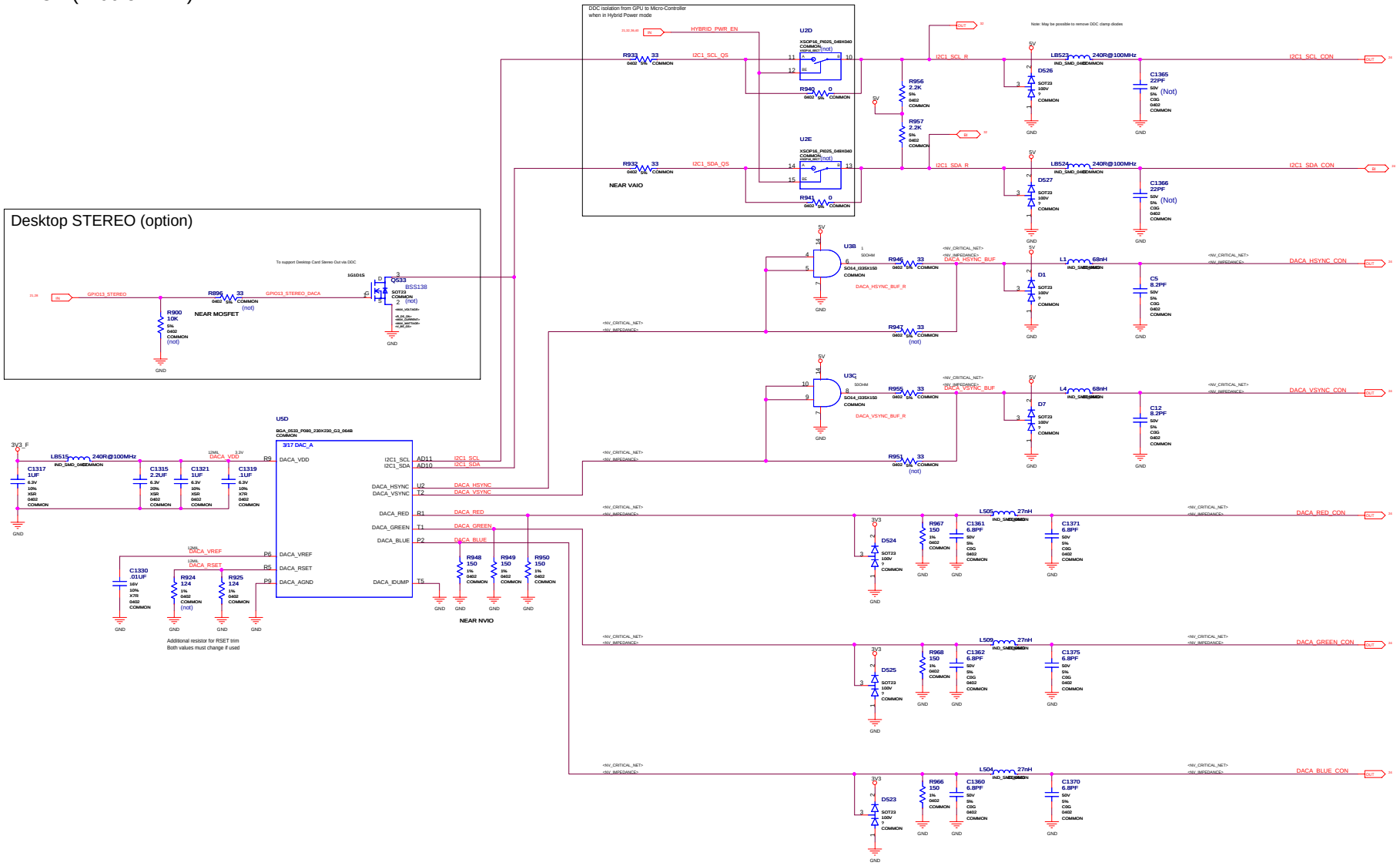

ASSEMBLY	BASE LEVEL GENERIC SCHEMATIC ONLY, COMMON & NO_STUFF ASSEMBLY NOTES AND BOM NOT FINAL
PAGE DETAIL	Display: DACA (Middle DVI-I)

ALL NVIDIA DESIGN SPECIFICATIONS, REFERENCE SPECIFICATIONS, REFERENCE BOARDS, FILES, DRAWINGS, DIAGNOSTICS, LISTS AND OTHER DOCUMENTS OR INFORMATION (TOGETHER AND SEPARATELY, 'MATERIALS') ARE BEING PROVIDED 'AS IS'. THE MATERIALS MAY CONTAIN KNOWN AND UNKNOWN VIOLATIONS OR DEVIATIONS OF INDUSTRY STANDARDS AND SPECIFICATIONS. NVIDIA MAKES NO WARRANTIES, EXPRESSED, IMPLIED, STATUTORY OR OTHERWISE WITH RESPECT TO THE MATERIALS OR OTHERWISE, AND EXPRESSLY DISCLAIMS ALL IMPLIED WARRANTIES INCLUDING, WITHOUT LIMITATION, THE WARRANTIES OF DESIGN, OF NONINFRINGEMENT, MERCHANTABILITY OR FITNESS FOR A PARTICULAR PURPOSE, OR ARISING FROM A COURSE OF DEALING, TRADE USAGE, TRADE PRACTICE, OR INDUSTRY STANDARDS.

Micro-Star International Co., LTD.

<Title>

Size	Document Number	Rev
Custom	<Doc>	<FevCode>

Date: Friday, June 05, 2009 | Sheet 20 of 41

Display: DACC (South DVI-I)

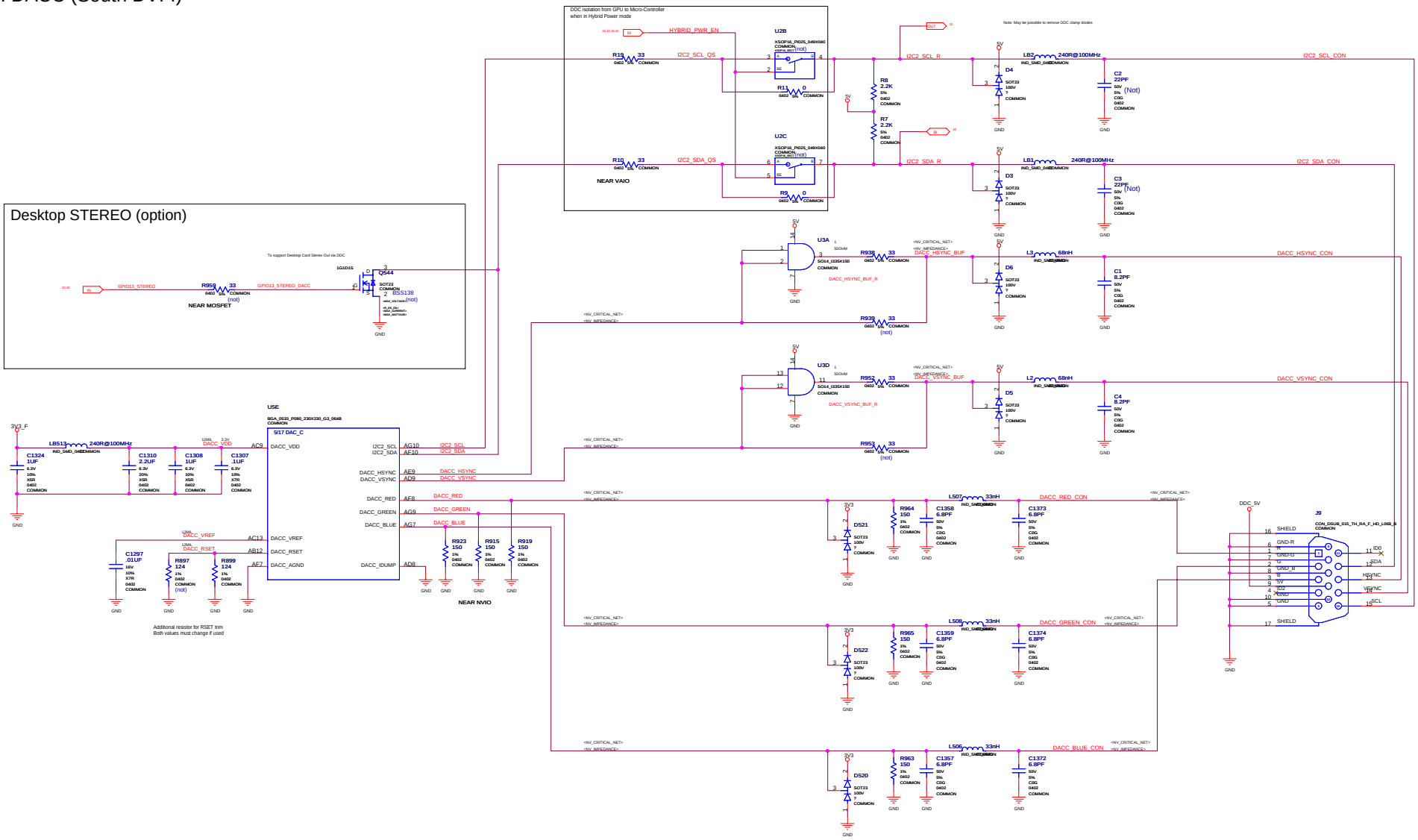

ALL NVIDIA DESIGN SPECIFICATIONS, REFERENCE SPECIFICATIONS, REFERENCE BOARDS, FILES, DRAWINGS, DIAGNOSTICS, LISTS AND OTHER DOCUMENTS OR INFORMATION (TOGETHER AND SEPARATELY, 'MATERIALS') ARE BEING PROVIDED 'AS IS'. THE MATERIALS MAY CONTAIN KNOWN AND UNKNOWN VIOLATIONS OR DEVIATIONS OF INDUSTRY STANDARDS AND SPECIFICATIONS. NVIDIA MAKES NO WARRANTIES, EXPRESSED, IMPLIED, STATUTORY OR OTHERWISE WITH RESPECT TO THE MATERIALS OR OTHERWISE, AND EXPRESSLY DISCLAIMS ALL IMPLIED WARRANTIES INCLUDING, WITHOUT LIMITATION, THE WARRANTIES OF DESIGN, OF NONINFRINGEMENT, MERCHANTABILITY OR FITNESS FOR A PARTICULAR PURPOSE, OR ARISING FROM A COURSE OF DEALING, TRADE USAGE, TRADE PRACTICE, OR INDUSTRY STANDARDS.

ASSEMBLY	BASE LEVEL GENERIC SCHEMATIC ONLY, COMMON & NO_STUFF ASSEMBLY NOTES AND BOM NOT FINAL
PAGE DETAIL	Display: DACC (South DVI-I)

Micro-Star International Co., LTD.

<Title>

Size	Document Number	Rev
Custom	<Doc>	<RevCode>

Date: Friday, June 05, 2009 | Sheet 21 of 41

Display: DACB (North MiniDIN) SD/HDTV out

11/21 remove TV

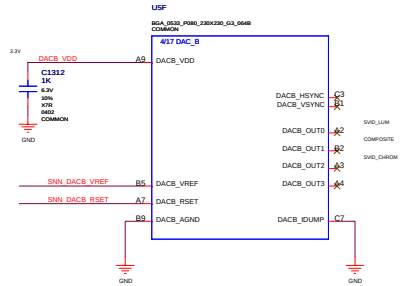

Additional resistor for RSET trim
Both values must change if used

ASSEMBLY	BASE LEVEL GENERIC SCHEMATIC ONLY, COMMON & NO_STUFF ASSEMBLY NOTES AND BOM NOT FINAL
PAGE DETAIL	Display: DACB (North MiniDIN) SD/HDTV out

ALL NVIDIA DESIGN SPECIFICATIONS, REFERENCE SPECIFICATIONS, REFERENCE BOARDS, FILES, DRAWINGS, DIAGNOSTICS, LISTS AND OTHER DOCUMENTS OR INFORMATION (TOGETHER AND SEPARATELY, 'MATERIALS') ARE BEING PROVIDED 'AS IS'. THE MATERIALS MAY CONTAIN KNOWN AND UNKNOWN VIOLATIONS OR DEVIATIONS OF INDUSTRY STANDARDS AND SPECIFICATIONS. NVIDIA MAKES NO WARRANTIES, EXPRESSED, IMPLIED, STATUTORY OR OTHERWISE WITH RESPECT TO THE MATERIALS OR OTHERWISE, AND EXPRESSLY DISCLAIMS ALL IMPLIED WARRANTIES INCLUDING, WITHOUT LIMITATION, THE WARRANTIES OF DESIGN, OF NONINFRINGEMENT, MERCHANTABILITY OR FITNESS FOR A PARTICULAR PURPOSE, OR ARISING FROM A COURSE OF DEALING, TRADE USAGE, TRADE PRACTICE, OR INDUSTRY STANDARDS.

Micro-Star International Co., LTD.

<Title>

Size	Document Number	Rev
Custom	<Doc>	<FevCode>

Date: Friday, June 05, 2009 | Sheet 22 of 41

Display: IFPAB for South DVI-I (with DACC)

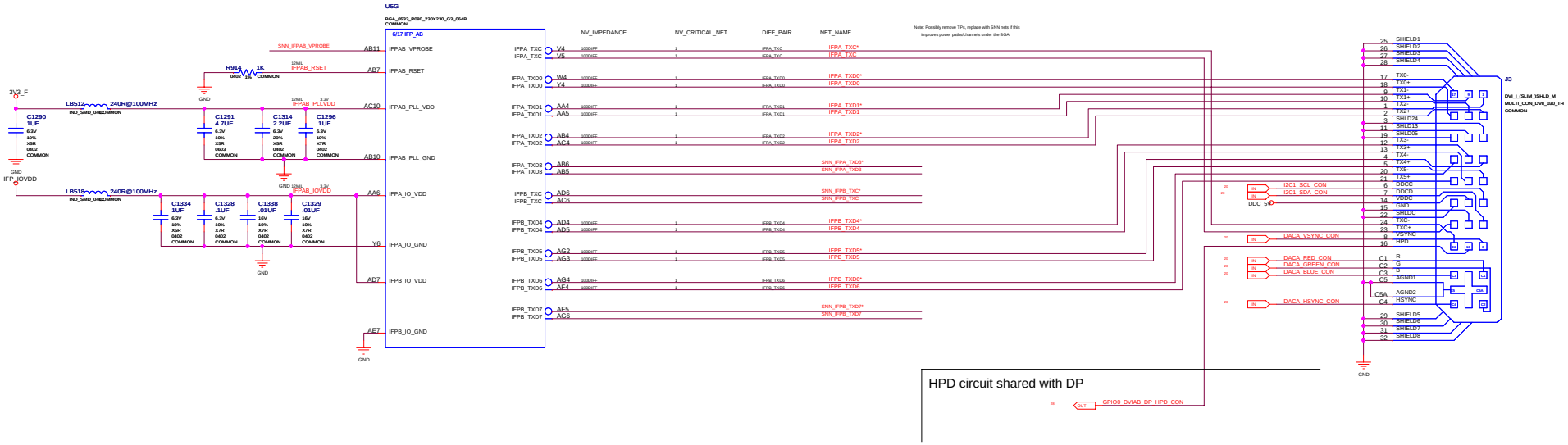

ALL NVIDIA DESIGN SPECIFICATIONS, REFERENCE SPECIFICATIONS, REFERENCE BOARDS, FILES, DRAWINGS, DIAGNOSTICS, LISTS AND OTHER DOCUMENTS OR INFORMATION (TOGETHER AND SEPARATELY, 'MATERIALS') ARE BEING PROVIDED 'AS IS'. THE MATERIALS MAY CONTAIN KNOWN AND UNKNOWN VIOLATIONS OR DEVIATIONS OF INDUSTRY STANDARDS AND SPECIFICATIONS. NVIDIA MAKES NO WARRANTIES, EXPRESSED, IMPLIED, STATUTORY OR OTHERWISE WITH RESPECT TO THE MATERIALS OR OTHERWISE, AND EXPRESSLY DISCLAIMS ALL IMPLIED WARRANTIES INCLUDING, WITHOUT LIMITATION, THE WARRANTIES OF DESIGN, OF NONINFRINGEMENT, MERCHANTABILITY OR FITNESS FOR A PARTICULAR PURPOSE, OR ARISING FROM A COURSE OF DEALING, TRADE USAGE, TRADE PRACTICE, OR INDUSTRY STANDARDS.

ASSEMBLY	BASE LEVEL GENERIC SCHEMATIC ONLY, COMMON & NO_STUFF ASSEMBLY NOTES AND BOM NOT FINAL
PAGE DETAIL	Display: IFPAB for south DVI-I (with DACC)

Micro-Star International Co., LTD.

<Title>

Size	Document Number	Rev
Custom	<Doc>	<FevCode>

Date: Friday, June 05, 2009 | Sheet 23 of 41

Display: IFPCD for middle DVI-I (with DACA)

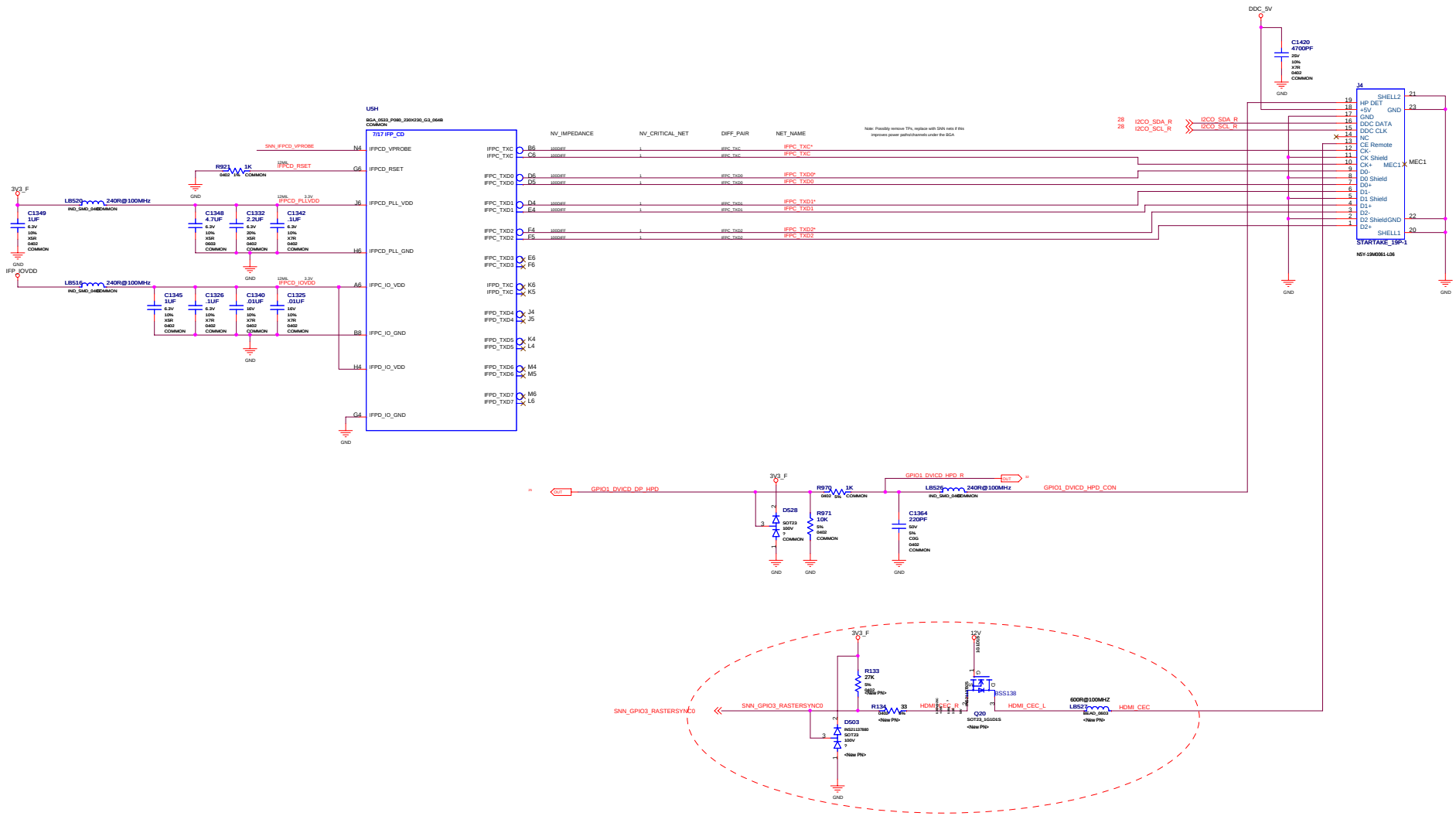

ASSEMBLY	BASE LEVEL GENERIC SCHEMATIC ONLY, COMMON & NO_STUFF ASSEMBLY NOTES AND BOM NOT FINAL
PAGE DETAIL	Display: IFPCD for middle DVI-I (with DACA)

ALL NVIDIA DESIGN SPECIFICATIONS, REFERENCE SPECIFICATIONS, REFERENCE BOARDS, FILES, DRAWINGS, DIAGNOSTICS, LISTS AND OTHER DOCUMENTS OR INFORMATION (TOGETHER AND SEPARATELY, 'MATERIALS') ARE BEING PROVIDED 'AS IS'. THE MATERIALS MAY CONTAIN KNOWN AND UNKNOWN VIOLATIONS OR DEVIATIONS OF INDUSTRY STANDARDS AND SPECIFICATIONS. NVIDIA MAKES NO WARRANTIES, EXPRESSED, IMPLIED, STATUTORY OR OTHERWISE WITH RESPECT TO THE MATERIALS OR OTHERWISE, AND EXPRESSLY DISCLAIMS ALL IMPLIED WARRANTIES INCLUDING, WITHOUT LIMITATION, THE WARRANTIES OF DESIGN, OF NONINFRINGEMENT, MERCHANTABILITY OR FITNESS FOR A PARTICULAR PURPOSE, OR ARISING FROM A COURSE OF DEALING, TRADE USAGE, TRADE PRACTICE, OR INDUSTRY STANDARDS.

Micro-Star International Co., LTD.

<Title>

Size	Document Number	Rev
Custom	<Doc>	<FevCode>

Date: Friday, June 05, 2009 | Sheet 24 of 41

Display: DP - Analogix

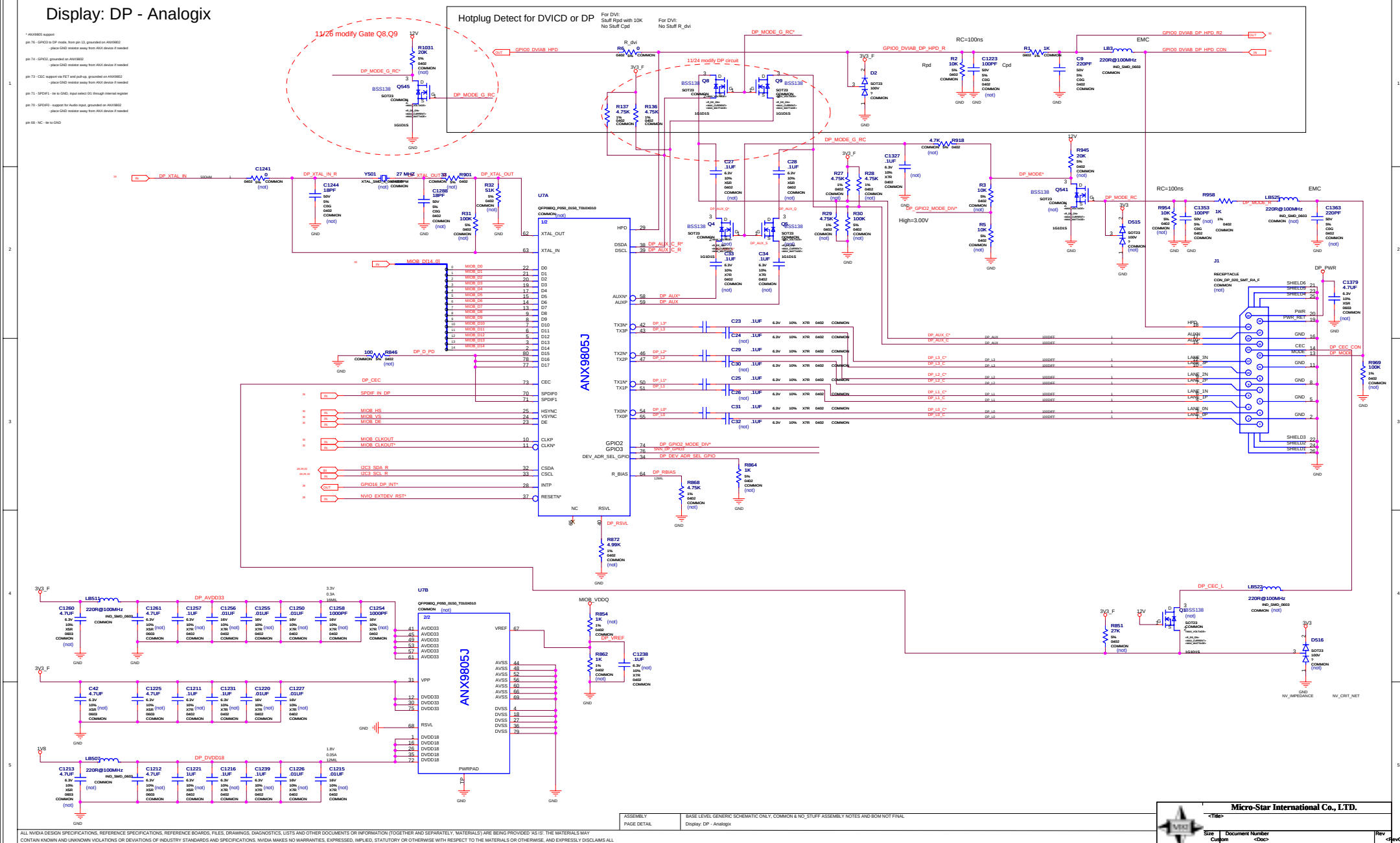

* ANX9805 support

pin 76 - GPIO3 to DP mode, from pin 13, grounded on ANX9802
- place GND resistor away from ANX device if needed

pin 74 - GPIO2, grounded on ANX9802
- place GND resistor away from ANX device if needed

pin 73 - CEC support via FET and pull-up, grounded on ANX9802
- place GND resistor away from ANX device if needed

pin 71 - SPDIF1 - tie to GND, input select 0/1 through internal register

pin 70 - SPDIF0 - support for Audio input, grounded on ANX9802
- place GND resistor away from ANX device if needed

pin 68 - NC - tie to GND

ALL NVIDIA DESIGN SPECIFICATIONS, REFERENCE SPECIFICATIONS, REFERENCE BOARDS, FILES, DRAWINGS, DIAGNOSTICS, LISTS AND OTHER DOCUMENTS OR INFORMATION (TOGETHER AND SEPARATELY, MATERIALS) ARE BEING PROVIDED 'AS IS'. THE MATERIALS MAY CONTAIN KNOWN AND UNKNOWN VIOLATIONS OR DEVIATIONS OF INDUSTRY STANDARDS AND SPECIFICATIONS. NVIDIA MAKES NO WARRANTIES, EXPRESSED, IMPLIED, STATUTORY OR OTHERWISE WITH RESPECT TO THE MATERIALS OR OTHERWISE, AND EXPRESSLY DISCLAIMS ALL IMPLIED WARRANTIES INCLUDING, WITHOUT LIMITATION, THE WARRANTIES OF DESIGN, OF NONINFRINGEMENT, MERCHANTABILITY OR FITNESS FOR A PARTICULAR PURPOSE, OR ARISING FROM A COURSE OF DEALING, TRADE USAGE, TRADE PRACTICE, OR INDUSTRY STANDARDS.

ASSEMBLY	BASE LEVEL GENERIC SCHEMATIC ONLY, COMMON & NO_STUFF ASSEMBLY NOTES AND BOM NOT FINAL
PAGE DETAIL	Display: DP - Analogix

Micro-Star International Co., LTD.

<Title>

Size	Document Number	Rev
Custom	<Doc>	<FevCode>

Date: Friday, June 05, 2009 | Sheet 25 of 41

Connectors: SPDIF

SPDIF INPUT / Level Detection

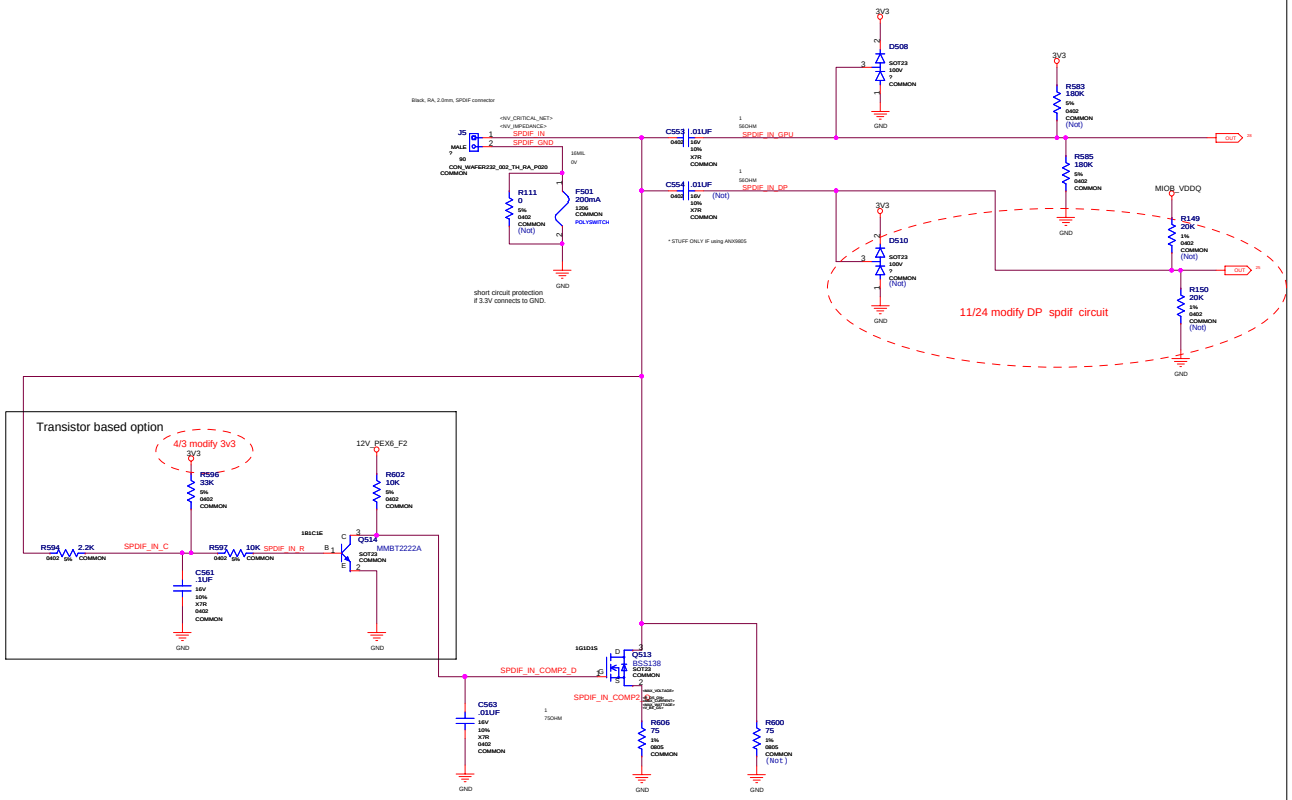

ASSEMBLY	BASE LEVEL GENERIC SCHEMATIC ONLY, COMMON & NO_STUFF ASSEMBLY NOTES AND BOM NOT FINAL
PAGE DETAIL	Connectors: SPDIF

ALL NVIDIA DESIGN SPECIFICATIONS, REFERENCE SPECIFICATIONS, REFERENCE BOARDS, FILES, DRAWINGS, DIAGNOSTICS, LISTS AND OTHER DOCUMENTS OR INFORMATION (TOGETHER AND SEPARATELY, 'MATERIALS') ARE BEING PROVIDED 'AS IS'. THE MATERIALS MAY CONTAIN KNOWN AND UNKNOWN VIOLATIONS OR DEVIATIONS OF INDUSTRY STANDARDS AND SPECIFICATIONS. NVIDIA MAKES NO WARRANTIES, EXPRESSED, IMPLIED, STATUTORY OR OTHERWISE WITH RESPECT TO THE MATERIALS OR OTHERWISE, AND EXPRESSLY DISCLAIMS ALL IMPLIED WARRANTIES INCLUDING, WITHOUT LIMITATION, THE WARRANTIES OF DESIGN, OF NONINFRINGEMENT, MERCHANTABILITY OR FITNESS FOR A PARTICULAR PURPOSE, OR ARISING FROM A COURSE OF DEALING, TRADE USAGE, TRADE PRACTICE, OR INDUSTRY STANDARDS.

Micro-Star International Co., LTD.

<Title>

Size	Document Number	Rev
Custom	<Doc>	<FevCode>

Date: Friday, June 05, 2009 | Sheet 26 of 41

Connectors: DR Interface (Dual SLI)

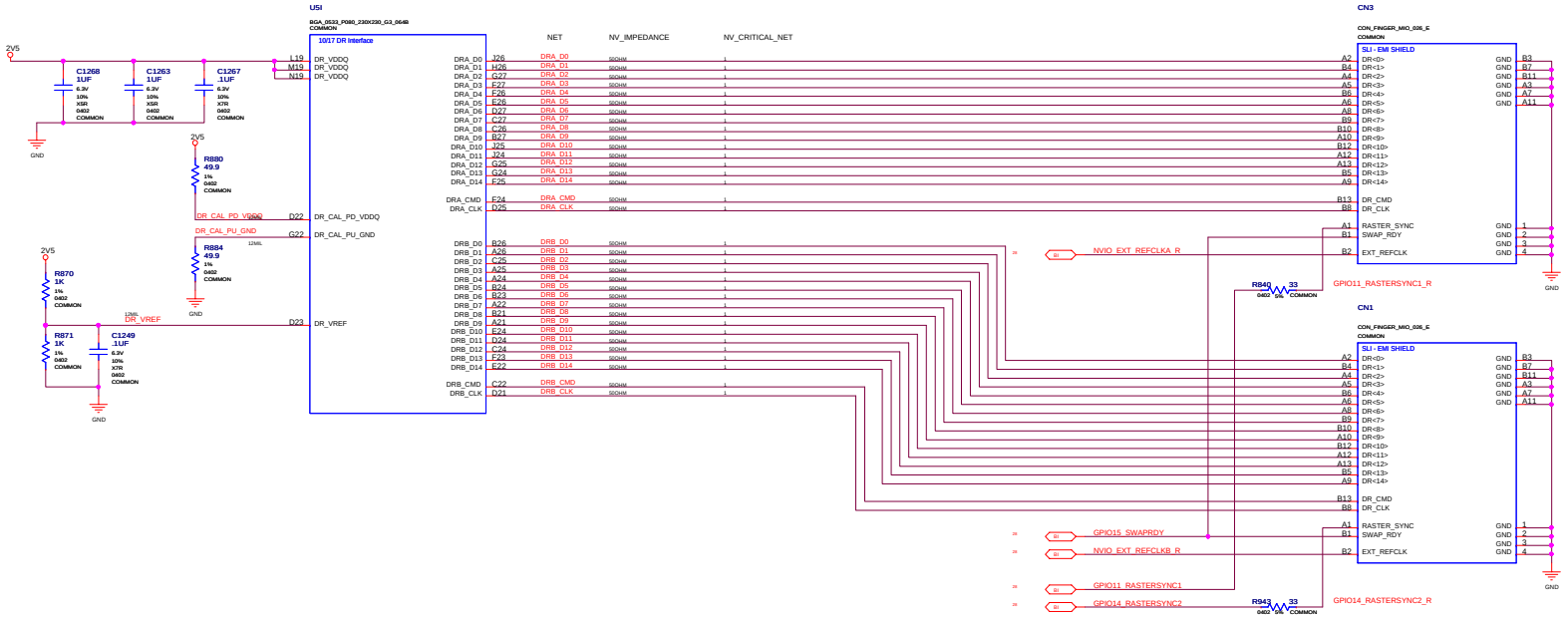

ASSEMBLY: BASE LEVEL GENERIC SCHEMATIC ONLY, COMMON & NO_STUFF ASSEMBLY NOTES AND BOM NOT FINAL

PAGE DETAIL: Connectors: DR Interface (Dual SLI)

ALL NVIDIA DESIGN SPECIFICATIONS, REFERENCE SPECIFICATIONS, REFERENCE BOARDS, FILES, DRAWINGS, DIAGNOSTICS, LISTS AND OTHER DOCUMENTS OR INFORMATION (TOGETHER AND SEPARATELY, "MATERIALS") ARE BEING PROVIDED "AS IS". THE MATERIALS MAY CONTAIN KNOWN AND UNKNOWN VIOLATIONS OR DEVIATIONS OF INDUSTRY STANDARDS AND SPECIFICATIONS. NVIDIA MAKES NO WARRANTIES, EXPRESSED, IMPLIED, STATUTORY OR OTHERWISE WITH RESPECT TO THE MATERIALS OR OTHERWISE, AND EXPRESSLY DISCLAIMS ALL IMPLIED WARRANTIES INCLUDING, WITHOUT LIMITATION, THE WARRANTIES OF DESIGN, OF NONINFRINGEMENT, MERCHANTABILITY OR FITNESS FOR A PARTICULAR PURPOSE, OR ARISING FROM A COURSE OF DEALING, TRADE USAGE, TRADE PRACTICE, OR INDUSTRY STANDARDS.

Micro-Star International Co., LTD.

<Title>

Size	Document Number	Rev
Custom	<Doc>	<FevCode>

Date: Friday, June 05, 2009 | Sheet 27 of 41

MISC: GPIO / XTAL / VBIOS / HDCP / I2C

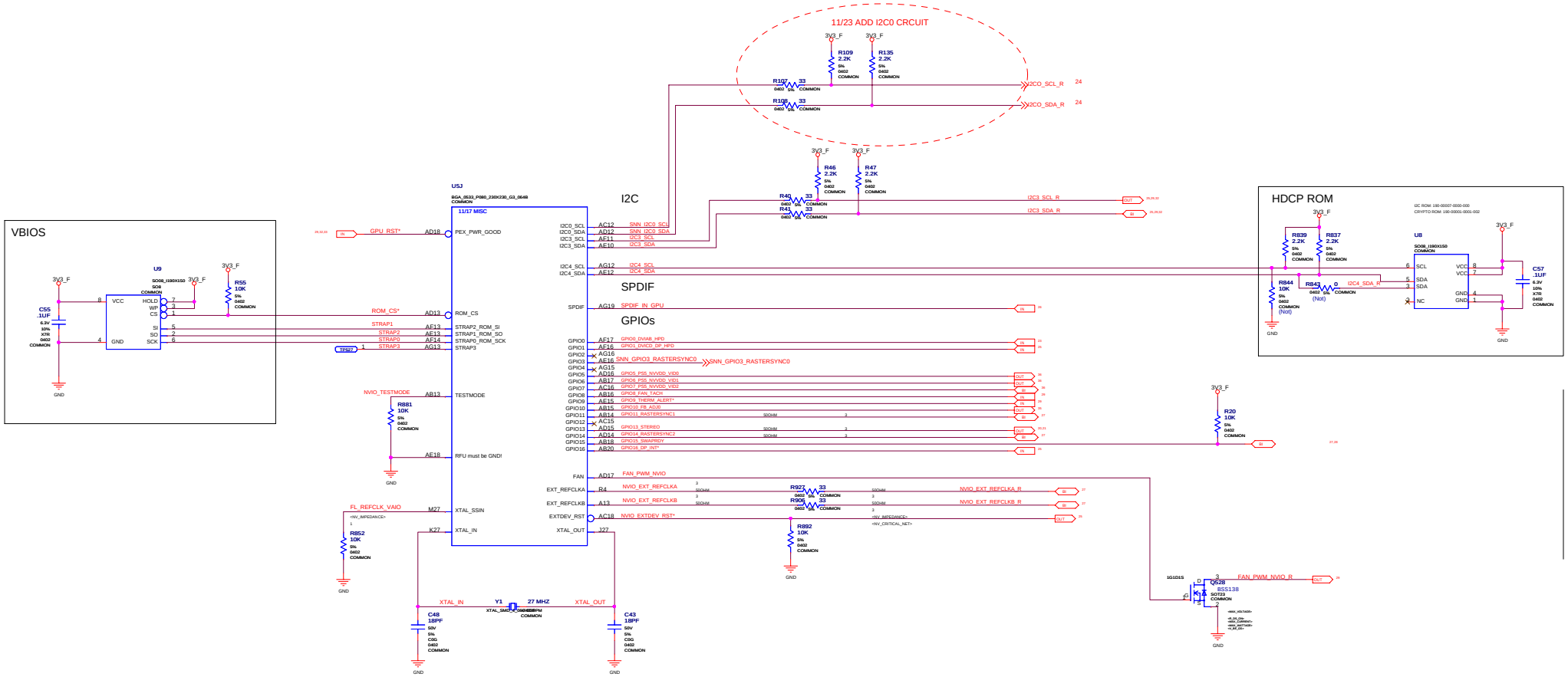

ALL NVIDIA DESIGN SPECIFICATIONS, REFERENCE SPECIFICATIONS, REFERENCE BOARDS, FILES, DRAWINGS, DIAGNOSTICS, LISTS AND OTHER DOCUMENTS OR INFORMATION (TOGETHER AND SEPARATELY, "MATERIALS") ARE BEING PROVIDED "AS IS". THE MATERIALS MAY CONTAIN KNOWN AND UNKNOWN VIOLATIONS OR DEVIATIONS OF INDUSTRY STANDARDS AND SPECIFICATIONS. NVIDIA MAKES NO WARRANTIES, EXPRESSED, IMPLIED, STATUTORY OR OTHERWISE WITH RESPECT TO THE MATERIALS OR OTHERWISE, AND EXPRESSLY DISCLAIMS ALL IMPLIED WARRANTIES INCLUDING, WITHOUT LIMITATION, THE WARRANTIES OF DESIGN, OF NONINFRINGEMENT, MERCHANTABILITY OR FITNESS FOR A PARTICULAR PURPOSE, OR ARISING FROM A COURSE OF DEALING, TRADE USAGE, TRADE PRACTICE, OR INDUSTRY STANDARDS.

ASSEMBLY	BASE LEVEL GENERIC SCHEMATIC ONLY, COMMON & NO_STUFF ASSEMBLY NOTES AND BOM NOT FINAL
PAGE DETAIL	MISC: GPIO / XTAL / VBIOS / HDCP / I2C

Micro-Star International Co., LTD.

<Title>

Size	Document Number	Rev
Custom	<Doc>	<FevCode>

Date: Friday, June 05, 2009 Sheet 28 of 41

MISC: FAN / THERM

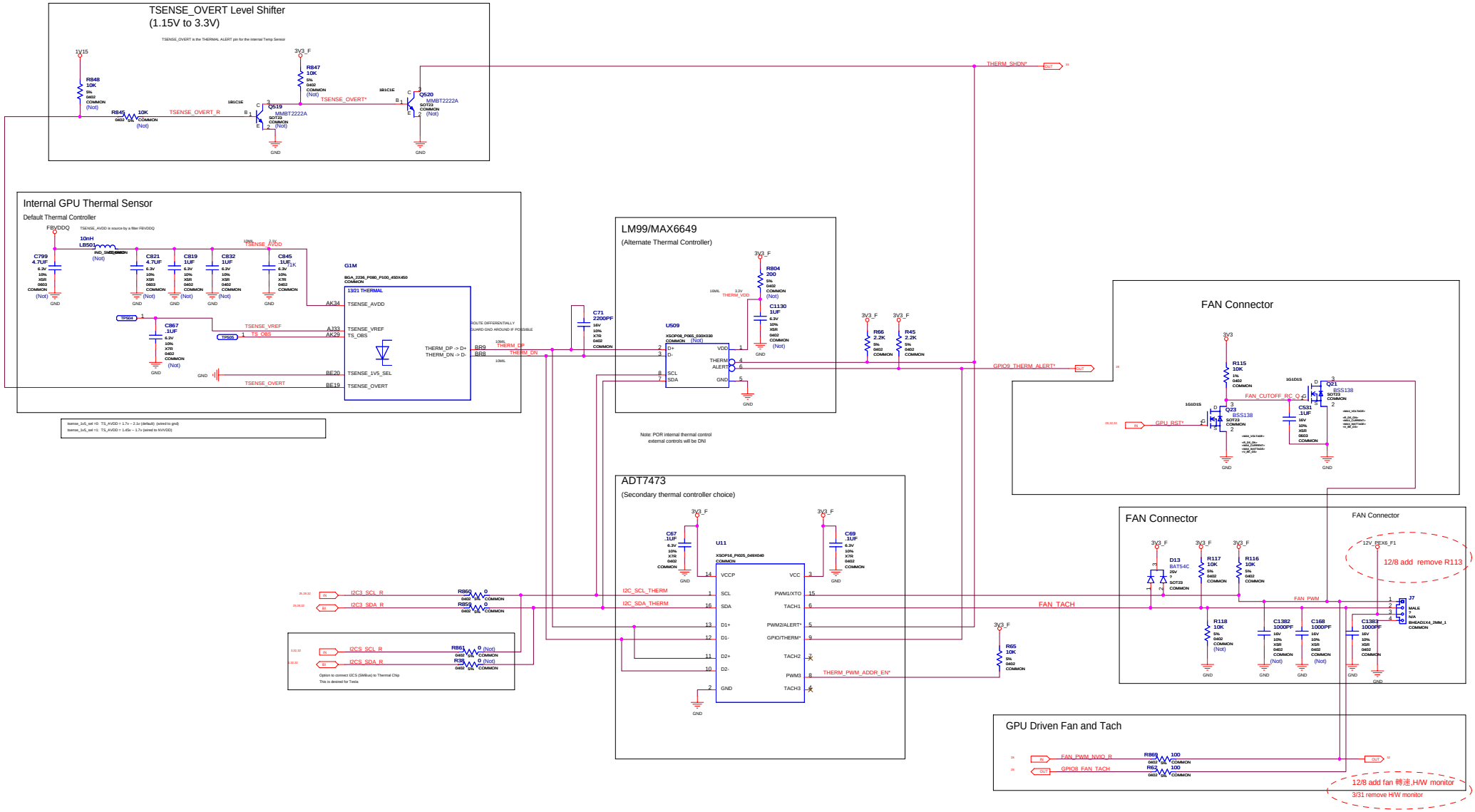

ASSEMBLY	BASE LEVEL GENERIC SCHEMATIC ONLY, COMMON & NO_STUFF ASSEMBLY NOTES AND BOM NOT FINAL
PAGE DETAIL	MISC: FAN / THERM

ALL NVIDIA DESIGN SPECIFICATIONS, REFERENCE SPECIFICATIONS, REFERENCE BOARDS, FILES, DRAWINGS, DIAGNOSTICS, LISTS AND OTHER DOCUMENTS OR INFORMATION (TOGETHER AND SEPARATELY, "MATERIALS") ARE BEING PROVIDED "AS IS". THE MATERIALS MAY CONTAIN KNOWN AND UNKNOWN VIOLATIONS OR DEVIATIONS OF INDUSTRY STANDARDS AND SPECIFICATIONS. NVIDIA MAKES NO WARRANTIES, EXPRESSED, IMPLIED, STATUTORY OR OTHERWISE WITH RESPECT TO THE MATERIALS OR OTHERWISE, AND EXPRESSLY DISCLAIMS ALL IMPLIED WARRANTIES INCLUDING, WITHOUT LIMITATION, THE WARRANTIES OF DESIGN, OF NONINFRINGEMENT, MERCHANTABILITY OR FITNESS FOR A PARTICULAR PURPOSE, OR ARISING FROM A COURSE OF DEALING, TRADE USAGE, TRADE PRACTICE, OR INDUSTRY STANDARDS.

Micro-Star International Co., LTD.

<Title>

Size	Document Number	Rev
Custom	<Doc>	<FevCode>

Date: Friday, June 05, 2009 | Sheet 29 of 41

MISC: MIO / DVI / STRAPS

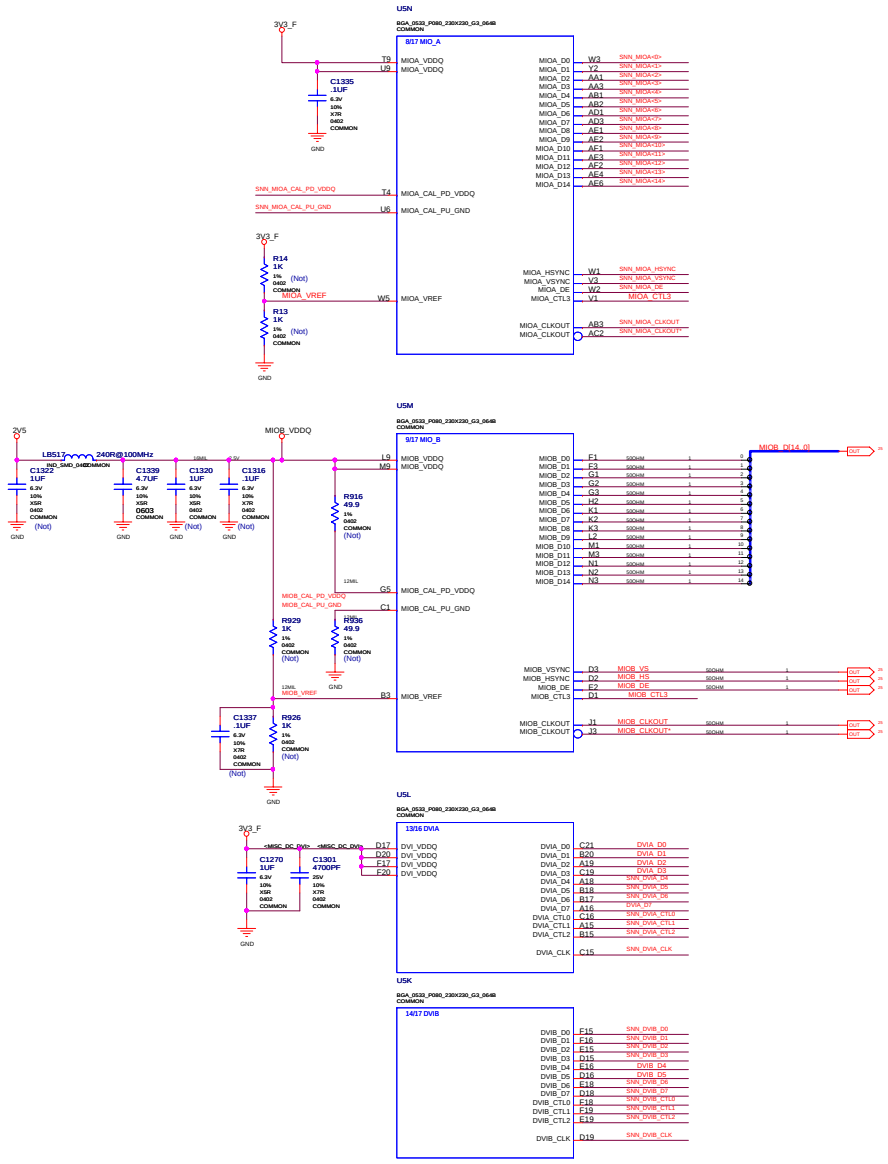

STRAPS

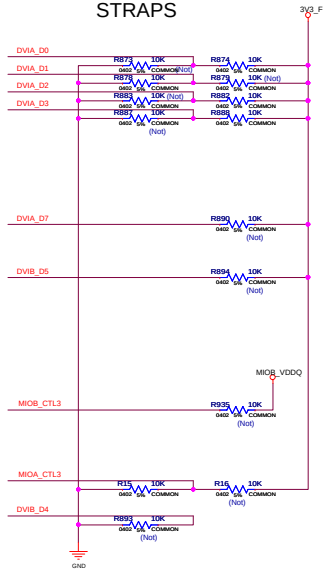

STRAP BITS BOOT0 = 0x101000

NR_:_USAGE_____COMMENT_____

00 : GV_WIDTH DEFAULT=0x0 (WIDE)

01 : SUB_VENDOR DEFAULT=0x1 (FROM BIOS)

02 : RAM_CFG[0]

03 : RAM_CFG[1]

04 : RAM_CFG[2]

05 : RAM_CFG[3]

06 : CRYSTAL DEFAULT=0x0 (27MHz)

07 : TV_MODE[0] DEFAULT=0x1 (NTSC_J)
08 : TV_MODE[1]
09 : TV_MODE[2]

10 : PCI_DEVID[0] SET BY BIOS
11 : PCI_DEVID[1]
12 : PCI_DEVID[2]
13 : PCI_DEVID[3] DEFAULT=0x0

14 : FB_SIZE[0] DEFAULT=0x2 (256MB ??)
15 : FB_SIZE[1]
16 : FB_SIZE[2]

17 : PEX_PLL_EN_TERM100 DEFAULT=0x0 (ENABLED)

18 : 3GIO_PAD_CFG_LUT_ADR[0] DEFAULT=0x3 (DESKTOP_DEFAULT)
19 : 3GIO_PAD_CFG_LUT_ADR[1]
20 : 3GIO_PAD_CFG_LUT_ADR[2]
21 : 3GIO_PAD_CFG_LUT_ADR[3]

22 : ROMTYPE[0] DEFAULT=0x1 (AT25S)
23 : ROMTYPE[1]

24 : USER[0] SET BY BIOS
25 : USER[1]
26 : USER[2]
27 : USER[3]

28 : PCI_DEVID_EXT DEFAULT=0x0

STRAP BITS BOOT3 = 0x10100C

NR_:_USAGE_____COMMENT_____

06 : XCLK_555 DEFAULT=0x0

16 : PCI_IOBAR DEFAULT=0x1
0=DISABLE, 1=ENABLE

CFG	Config Width	Vendor
0000	Reserved	
0001	16Mx32	512-bit Qimonda
0010	16Mx32	512-bit Hynix*
0011	16Mx32	512-bit Samsung*
0100	Reserved	
0101	32Mx32	512-bit Qimonda
0110	32Mx32	512-bit Hynix
0111	32Mx32	512-bit Samsung
1000	Reserved	
1001	16Mx32	448-bit Qimonda
1010	16Mx32	448-bit Hynix
1011	16Mx32	448-bit Samsung
1100	Reserved	
1101	32Mx32	448-bit Qimonda
1110	32Mx32	448-bit Hynix
1111	32Mx32	448-bit Samsung

ALL NVIDIA DESIGN SPECIFICATIONS, REFERENCE SPECIFICATIONS, REFERENCE BOARDS, FILES, DRAWINGS, DIAGNOSTICS, LISTS AND OTHER DOCUMENTS OR INFORMATION (TOGETHER AND SEPARATELY, "MATERIALS") ARE BEING PROVIDED "AS IS". THE MATERIALS MAY CONTAIN KNOWN AND UNKNOWN VIOLATIONS OR DEVIATIONS OF INDUSTRY STANDARDS AND SPECIFICATIONS. NVIDIA MAKES NO WARRANTIES, EXPRESSED, IMPLIED, STATUTORY OR OTHERWISE WITH RESPECT TO THE MATERIALS OR OTHERWISE, AND EXPRESSLY DISCLAIMS ALL IMPLIED WARRANTIES INCLUDING, WITHOUT LIMITATION, THE WARRANTIES OF DESIGN, OF NONINFRINGEMENT, MERCHANTABILITY OR FITNESS FOR A PARTICULAR PURPOSE, OR ARISING FROM A COURSE OF DEALING, TRADE USAGE, TRADE PRACTICE, OR INDUSTRY STANDARDS.

ASSEMBLY	BASE LEVEL GENERIC SCHEMATIC ONLY, COMMON & NO_STUFF ASSEMBLY NOTES AND BOM NOT FINAL
PAGE DETAIL	MISC: MIO / DVI / STRAPS

Micro-Star International Co., LTD.

<Title>

Size	Document Number	Rev
Custom	<Doc>	<FevCode>

Date: Friday, June 05, 2009 Sheet 30 of 41

Power and GND (GPU and NVIOx)

GPU SECTION GND

G1N — BGA_2236_P080_P100_450X450 COMMON — 19/21 GND1

AA11	GND	AG17	GND
AA13	GND	AG18	GND
AA15	GND	AG19	GND
AA16	GND	AG2	GND
AA17	GND	AG20	GND
AA18	GND	AG21	GND
AA19	GND	AG22	GND
AA2	GND	AG23	GND
AA20	GND	AG24	GND
AA21	GND	AG25	GND
AA22	GND	AG26	GND
AA23	GND	AG27	GND
AA24	GND	AG28	GND
AA25	GND	AG29	GND
AA26	GND	AG30	GND
AA27	GND	AG31	GND
AA28	GND	AG32	GND
AA29	GND	AG33	GND
AA30	GND	AG34	GND
AA31	GND	AG35	GND
AA32	GND	AG36	GND
AA33	GND	AG43	GND
AA34	GND	AG45	GND
AA35	GND	AG48	GND
AA36	GND	AG5	GND
AA43	GND	AG51	GND
AA45	GND	AG54	GND
AA48	GND	AG8	GND
AA5	GND	AH15	GND
AA51	GND	AH16	GND
AA54	GND	AH17	GND
AA8	GND	AH18	GND
AB15	GND	AH19	GND
AB16	GND	AH20	GND
AB17	GND	AH21	GND
AB18	GND	AH22	GND
AB19	GND	AH23	GND
AB20	GND	AH24	GND
AB21	GND	AH25	GND
AB22	GND	AH26	GND
AB23	GND	AH27	GND
AB24	GND	AH28	GND
AB25	GND	AH29	GND
AB26	GND	AH30	GND
AB27	GND	AH31	GND
AB28	GND	AH32	GND
AB29	GND	AH33	GND
AB30	GND	AH34	GND
AB31	GND	AH35	GND
AB32	GND	AH36	GND
AB33	GND	AJ11	GND
AB34	GND	AJ13	GND
AB35	GND	AJ2	GND
AB36	GND	AJ43	GND
AD11	GND	AJ45	GND
AD13	GND	AJ48	GND
AD2	GND	AJ5	GND
AD43	GND	AJ51	GND
AD45	GND	AJ54	GND
AD48	GND	AJ8	GND
AD5	GND	AM11	GND
AD51	GND	AM13	GND
AD54	GND	AM15	GND
AD8	GND	AM16	GND
AF15	GND	AM17	GND
AF16	GND	AM18	GND
AF17	GND	AM19	GND
AF18	GND	AM2	GND
AF19	GND	AM20	GND
AF20	GND	AM21	GND
AF21	GND	AM22	GND
AF22	GND	AM23	GND
AF23	GND	AM24	GND
AF24	GND	AM25	GND
AF25	GND	AM26	GND
AF26	GND	AM27	GND
AF27	GND	AM28	GND
AF28	GND	AM29	GND
AF29	GND	AM30	GND
AF30	GND	AM31	GND
AF31	GND	AM32	GND
AF32	GND	AM33	GND
AF33	GND	AM34	GND
AF34	GND	AM35	GND
AF35	GND	AM36	GND
AF36	GND	AM43	GND
AG11	GND	AM45	GND
AG13	GND	AM48	GND
AG15	GND	AM5	GND
AG16	GND	AM51	GND

G1O — BGA_2236_P080_P100_450X450 COMMON — 20/21 GND2

AM54	GND	B47	GND
AM8	GND	B50	GND
AN15	GND	B6	GND
AN16	GND	B9	GND
AN17	GND	BA11	GND
AN18	GND	BA13	GND
AN19	GND	BA2	GND
AN20	GND	BA43	GND
AN21	GND	BA45	GND
AN22	GND	BA48	GND
AN23	GND	BA5	GND
AN24	GND	BA51	GND
AN25	GND	BA54	GND
AN26	GND	BA8	GND
AN27	GND	BC15	GND
AN28	GND	BC18	GND
AN29	GND	BC21	GND
AN30	GND	BC24	GND
AN31	GND	BC27	GND
AN32	GND	BC29	GND
AN33	GND	BC32	GND
AN34	GND	BC35	GND
AN35	GND	BC38	GND
AN36	GND	BC41	GND
AP15	GND	BD11	GND
AP16	GND	BD2	GND
AP17	GND	BD45	GND
AP18	GND	BD48	GND
AP19	GND	BD5	GND
AP20	GND	BD51	GND
AP21	GND	BD54	GND
AP24	GND	BD8	GND
AP25	GND	BE15	GND
AP26	GND	BE18	GND
AP27	GND	BE21	GND
AP28	GND	BE24	GND
AP29	GND	BE27	GND
AP30	GND	BE29	GND
AR45	GND	BE32	GND
AR48	GND	BE35	GND
AR5	GND	BE38	GND
AR51	GND	BE41	GND
AR54	GND	BE44	GND
AT23	GND	BG2	GND
AT25	GND	BG48	GND
AT26	GND	BG5	GND
AT28	GND	BG51	GND
AT30	GND	BG54	GND
AT32	GND	BG8	GND
AT34	GND	BH12	GND
AT36	GND	BH15	GND
AV11	GND	BH18	GND
AV13	GND	BH21	GND
AV2	GND	BH24	GND
AV43	GND	BH27	GND
AV45	GND	BH29	GND
AV48	GND	BH32	GND
AV5	GND	BH35	GND
AV51	GND	BH38	GND
AV54	GND	BH41	GND
AV8	GND	BH44	GND
B18	GND	BH47	GND
B21	GND	BH9	GND
B24	GND	BK2	GND
B27	GND	BK5	GND
B29	GND	BK51	GND
B32	GND	BK54	GND
B35	GND	BL12	GND
B38	GND	BL15	GND
B41	GND	BL18	GND
B44	GND	BL21	GND
		BL24	GND
		BL27	GND
		BL29	GND
		BL32	GND
		BL35	GND
		BL38	GND
		BL41	GND
		BL44	GND
		BL47	GND
		BL50	GND
		BL6	GND
		BL9	GND
		BM4	GND
		BM52	GND
		BN3	GND
		BN53	GND
		BP12	GND
		BP15	GND

G1P — BGA_2236_P080_P100_450X450 COMMON — 21/21 GND3

BP18	GND	GND	R16
BP21	GND	GND	R18
BP24	GND	GND	R2
BP27	GND	GND	R20
BP29	GND	GND	R22
BP32	GND	GND	R24
BP35	GND	GND	R27
BP38	GND	GND	R29
BP41	GND	GND	R31
BP44	GND	GND	R33
BP47	GND	GND	R35
BP50	GND	GND	R43
BP6	GND	GND	R45
BP9	GND	GND	R48
C3	GND	GND	R5
C53	GND	GND	R51
D4	GND	GND	R54
D52	GND	GND	R8
E12	GND	GND	T15
E15	GND	GND	T16
E18	GND	GND	T17
E21	GND	GND	T18
E24	GND	GND	T19
E27	GND	GND	T20
E29	GND	GND	T21
E32	GND	GND	T22
E35	GND	GND	T23
E38	GND	GND	T24
E41	GND	GND	T25
E44	GND	GND	T26
E47	GND	GND	T27
E50	GND	GND	T29
E6	GND	GND	T30
E9	GND	GND	T31
F2	GND	GND	T32
F5	GND	GND	T33
F51	GND	GND	T34
F54	GND	GND	T35
H12	GND	GND	T36
H15	GND	GND	V11
H18	GND	GND	V13
H21	GND	GND	V2
H24	GND	GND	V43
H27	GND	GND	V45
H29	GND	GND	V48
H32	GND	GND	V5
H35	GND	GND	V51
H38	GND	GND	V54
H41	GND	GND	V8
H44	GND	GND	Y15
H47	GND	GND	Y16
H9	GND	GND	Y17
J2	GND	GND	Y18
J48	GND	GND	Y19
J5	GND	GND	Y20
J51	GND	GND	Y21
J54	GND	GND	Y22
J8	GND	GND	Y23
L12	GND	GND	Y24
L15	GND	GND	Y25
L18	GND	GND	Y26
L21	GND	GND	Y27
L24	GND	GND	Y28
L27	GND	GND	Y29
L29	GND	GND	Y30
L32	GND	GND	Y31
L35	GND	GND	Y32
L38	GND	GND	Y33
L41	GND	GND	Y34
L44	GND	GND	Y35
M11	GND	GND	Y36
M2	GND		
M45	GND		
M48	GND		
M5	GND		
M51	GND		
M54	GND		
M8	GND		
N15	GND		
N18	GND		
N21	GND		
N24	GND		
N27	GND		
N29	GND		
N32	GND		
N35	GND		
N38	GND		
N41	GND		
R11	GND		
R13	GND		

GPU SECTION POWER

G1Q — BGA_2236_P080_P100_450X450 COMMON — 14/21 NVVDD1

AC15	NVVDD	AJ21	NVVDD
AC16	NVVDD	AJ22	NVVDD
AC17	NVVDD	AJ23	NVVDD
AC18	NVVDD	AJ24	NVVDD
AC19	NVVDD	AJ27	NVVDD
AC20	NVVDD	AJ28	NVVDD
AC21	NVVDD	AJ29	NVVDD
AC22	NVVDD	AJ30	NVVDD
AC23	NVVDD	AJ31	NVVDD
AC24	NVVDD	AJ32	NVVDD
AC25	NVVDD	AJ34	NVVDD
AC26	NVVDD	AJ35	NVVDD
AC27	NVVDD	AJ36	NVVDD
AC28	NVVDD	AK15	NVVDD
AC29	NVVDD	AK16	NVVDD
AC30	NVVDD	AK17	NVVDD
AC31	NVVDD	AK18	NVVDD
AC32	NVVDD	AK19	NVVDD
AC33	NVVDD	AK20	NVVDD
AC34	NVVDD	AK21	NVVDD
AC35	NVVDD	AK22	NVVDD
AC36	NVVDD	AK23	NVVDD
AD15	NVVDD	AK24	NVVDD
AD16	NVVDD	AK25	NVVDD
AD17	NVVDD	AK26	NVVDD
AD18	NVVDD	AK27	NVVDD
AD19	NVVDD	AK28	NVVDD
AD20	NVVDD	AK30	NVVDD
AD21	NVVDD	AK31	NVVDD
AD22	NVVDD	AK32	NVVDD
AD23	NVVDD	AK33	NVVDD
AD24	NVVDD	AK35	NVVDD
AD25	NVVDD	AK36	NVVDD
AD26	NVVDD	AL15	NVVDD
AD27	NVVDD	AL16	NVVDD
AD28	NVVDD	AL17	NVVDD
AD29	NVVDD	AL18	NVVDD
AD30	NVVDD	AL19	NVVDD
AD31	NVVDD	AL20	NVVDD
AD32	NVVDD	AL21	NVVDD
AD33	NVVDD	AL22	NVVDD
AD34	NVVDD	AL23	NVVDD
AD35	NVVDD	AL24	NVVDD
AD36	NVVDD	AL25	NVVDD
AE15	NVVDD	AL26	NVVDD
AE16	NVVDD	AL27	NVVDD
AE17	NVVDD	AL28	NVVDD
AE18	NVVDD	AL29	NVVDD
AE19	NVVDD	AL30	NVVDD
AE20	NVVDD	AL31	NVVDD
AE21	NVVDD	AL32	NVVDD
AE22	NVVDD	AL33	NVVDD
AE23	NVVDD	AL34	NVVDD
AE24	NVVDD	AL35	NVVDD
AE27	NVVDD	AL36	NVVDD
AE28	NVVDD	AR15	NVVDD
AE29	NVVDD	AR16	NVVDD
AE30	NVVDD	AR17	NVVDD
AE31	NVVDD	AR18	NVVDD
AE32	NVVDD	AR19	NVVDD
AE33	NVVDD	AR20	NVVDD
AE34	NVVDD	AR21	NVVDD
AE35	NVVDD	AR22	NVVDD
AE36	NVVDD	AR23	NVVDD
AJ15	NVVDD	AR24	NVVDD
AJ16	NVVDD	AR25	NVVDD
AJ17	NVVDD	AR26	NVVDD
AJ18	NVVDD	AR27	NVVDD
AJ19	NVVDD	AR28	NVVDD
AJ20	NVVDD	AR29	NVVDD

G1R — BGA_2236_P080_P100_450X450 COMMON — 15/21 NVVDD2

AR30	NVVDD	V17	NVVDD
AR31	NVVDD	V18	NVVDD
AR32	NVVDD	V19	NVVDD
AR33	NVVDD	V20	NVVDD
AR34	NVVDD	V21	NVVDD
AR35	NVVDD	V22	NVVDD
AR36	NVVDD	V23	NVVDD
AT16	NVVDD	V24	NVVDD
AT18	NVVDD	V25	NVVDD
AT20	NVVDD	V26	NVVDD
AT22	NVVDD	V27	NVVDD
AT24	NVVDD	V28	NVVDD
AT27	NVVDD	V29	NVVDD
AT29	NVVDD	V30	NVVDD
AT31	NVVDD	V31	NVVDD
AT33	NVVDD	V32	NVVDD
AT35	NVVDD	V33	NVVDD
BB43	NVVDD	V34	NVVDD
BC13	NVVDD	V35	NVVDD
BC14	NVVDD	V36	NVVDD
BC22	NVVDD	W15	NVVDD
BC23	NVVDD	W16	NVVDD
BC25	NVVDD	W17	NVVDD
BC26	NVVDD	W18	NVVDD
BC28	NVVDD	W19	NVVDD
BC30	NVVDD	W20	NVVDD
BC31	NVVDD	W21	NVVDD
BC33	NVVDD	W22	NVVDD
BC34	NVVDD	W23	NVVDD
BC36	NVVDD	W24	NVVDD
BC37	NVVDD	W25	NVVDD
BC39	NVVDD	W26	NVVDD
BC40	NVVDD	W27	NVVDD
BC42	NVVDD	W28	NVVDD
R15	NVVDD	W29	NVVDD
R17	NVVDD	W30	NVVDD
R19	NVVDD	W31	NVVDD
R21	NVVDD	W32	NVVDD
R23	NVVDD	W33	NVVDD
R25	NVVDD	W34	NVVDD
R26	NVVDD	W35	NVVDD
R28	NVVDD	W36	NVVDD
R30	NVVDD		
R32	NVVDD		
R34	NVVDD		
R36	NVVDD		
U15	NVVDD		
U16	NVVDD		
U17	NVVDD		
U18	NVVDD		
U19	NVVDD		
U20	NVVDD		
U21	NVVDD		
U22	NVVDD		
U23	NVVDD		
U24	NVVDD		
U25	NVVDD		
U26	NVVDD		
U27	NVVDD		
U28	NVVDD		
U29	NVVDD		
U30	NVVDD		
U31	NVVDD		
U32	NVVDD		
U33	NVVDD		
U34	NVVDD		
U35	NVVDD		
U36	NVVDD		
V15	NVVDD		
V16	NVVDD		

GPU SECTION MISC

G1S — BGA_2236_P080_P100_450X450 COMMON — 11/21 FBVDDQ/RFU

AB13	FBVDDQ	FBA_RFU0	BJ38
AB43	FBVDDQ	FBA_RFU1	BG44
AC13	FBVDDQ	FBA_RFU2	BL46
AC43	FBVDDQ	FBA_RFU3	BG45
AE43	FBVDDQ	FBA_RFU4	BF51
AF13	FBVDDQ	FBA_RFU5	BE48
AF43	FBVDDQ	FBA_RFU6	BE49
AH13	FBVDDQ	FBA_RFU7	AY51
AH43	FBVDDQ		
AK13	FBVDDQ	FBB_RFU0	AP51
AK43	FBVDDQ	FBB_RFU1	AR47
AL13	FBVDDQ	FBB_RFU2	AM52
AL43	FBVDDQ	FBB_RFU3	AL45
AT13	FBVDDQ	FBB_RFU4	AJ49
AT43	FBVDDQ	FBB_RFU5	AH45
AU13	FBVDDQ	FBB_RFU6	AD49
AW43	FBVDDQ	FBB_RFU7	W47
AY13	FBVDDQ		
L28	FBVDDQ	FBC_RFU0	V52
N16	FBVDDQ	FBC_RFU1	V47
		FBC_RFU2	V50
N17	FBVDDQ	FBC_RFU3	R49
N19	FBVDDQ	FBC_RFU4	N53
N20	FBVDDQ	FBC_RFU5	J46
N22	FBVDDQ	FBC_RFU6	F49
N23	FBVDDQ	FBC_RFU7	D50
N25	FBVDDQ		
N26	FBVDDQ	FBD_RFU0	G45
N28	FBVDDQ	FBD_RFU1	J41
N30	FBVDDQ	FBD_RFU2	F42
N31	FBVDDQ	FBD_RFU3	K39
		FBD_RFU4	G36
N33	FBVDDQ	FBD_RFU5	G32
N34	FBVDDQ	FBD_RFU6	E31
N36	FBVDDQ	FBD_RFU7	F27
N37	FBVDDQ		
N39	FBVDDQ	FBE_RFU0	H28
N40	FBVDDQ	FBE_RFU1	K24
T13	FBVDDQ	FBE_RFU2	E23
T43	FBVDDQ	FBE_RFU3	J22
U13	FBVDDQ	FBE_RFU4	F21
U43	FBVDDQ	FBE_RFU5	J16
		FBE_RFU6	E13
W13	FBVDDQ	FBE_RFU7	E10
W43	FBVDDQ		
Y13	FBVDDQ	FBF_RFU0	J13
Y43	FBVDDQ	FBF_RFU1	P9
		FBF_RFU2	K9
		FBF_RFU3	E8
		FBF_RFU4	L6
		FBF_RFU5	U5
		FBF_RFU6	U9
		FBF_RFU7	W5
		FBG_RFU0	AB9
		FBG_RFU1	AG6
		FBG_RFU2	AB3
		FBG_RFU3	AJ10
		FBG_RFU4	AH5
		FBG_RFU5	AN10
		FBG_RFU6	AR6
		FBG_RFU7	AR10
		FBH_RFU0	AU5
		FBH_RFU1	BB11
		FBH_RFU2	BF5
		FBH_RFU3	BE7
		FBH_RFU4	BJ8
		FBH_RFU5	BK6
		FBH_RFU6	BL7
		FBH_RFU7	BP9

GPU SECTION GND

G1T — BGA_2236_P080_P100_450X450 COMMON — 18/21 SPARE/MISC

SNN_SPARE_01	BB50	NC	A2
SNN_SPARE_02	BD46	NC	A3
SNN_SPARE_03	BB13	NC	A53
SNN_SPARE_04	BB14	NC	A54
SNN_SPARE_05	BE17	NC	B1
SNN_SPARE_06	BE22	NC	B2
SNN_SPARE_07	BE25	NC	B54
SNN_SPARE_08	BE28	NC	B55
SNN_SPARE_09	BE31	NC	BB13
SNN_SPARE_10	BE34	NC	BC43
SNN_SPARE_11	BF15	NC	BE10
SNN_SPARE_12	BF17	NC	BE11
SNN_SPARE_13	BF18	NC	BE42
SNN_SPARE_14	BF20	NC	BE43
SNN_SPARE_15	BF21	NC	BE45
SNN_SPARE_16	BF23	NC	BE46
SNN_SPARE_17	BF24	NC	BF14
SNN_SPARE_18	BF26	NC	BG15
SNN_SPARE_19	BF27	NC	BG16
SNN_SPARE_20	BF29	NC	BH13
SNN_SPARE_21	BF30	NC	BN1
SNN_SPARE_22	BF32	NC	BN55
SNN_SPARE_23	BF36	NC	BP1
SNN_SPARE_24	BF38	NC	BP2
SNN_SPARE_25	BF9	NC	BP54
SNN_SPARE_26	BG10	NC	BP55
SNN_SPARE_27	BG17	NC	BR2
SNN_SPARE_28	BG18	NC	BR3
SNN_SPARE_29	BG19	NC	BR53
SNN_SPARE_30	BG21	NC	BR54
SNN_SPARE_31	BG22	NC	C1
SNN_SPARE_32	BG24	NC	C55
SNN_SPARE_33	BG25	NC	J45
SNN_SPARE_34	BG27	NC	K35
SNN_SPARE_35	BG28	NC	K45
SNN_SPARE_36	BG30	NC	L10
SNN_SPARE_37	BG31	NC	L36
SNN_SPARE_38	BG33	NC	L9
SNN_SPARE_39	BG34	NC	N13
SNN_SPARE_40	BG36	NC	N43
SNN_SPARE_41	BG37		
SNN_SPARE_42	BG38		
SNN_SPARE_43	BG39		
SNN_SPARE_44	BG40		
SNN_SPARE_45	BG43		
SNN_SPARE_46	BG9		
SNN_SPARE_47	BH10		
SNN_SPARE_48	BH16		
SNN_SPARE_49	BH19		
SNN_SPARE_50	BH20		
SNN_SPARE_51	BH22		
SNN_SPARE_52	BH25		
SNN_SPARE_53	BH29		
SNN_SPARE_54	BH31		
SNN_SPARE_55	BH34		
SNN_SPARE_56	BH36		
SNN_SPARE_57	BH37		
SNN_SPARE_58	BH40		
SNN_SPARE_59	BH43		
SNN_SPARE_60	BH8		
SNN_SPARE_61	BJ18		
SNN_SPARE_62	BJ20		
SNN_SPARE_63	BJ30		
SNN_SPARE_64	BJ35		
SNN_SPARE_65	BJ36		
SNN_SPARE_66	BJ9		
SNN_SPARE_67	BK36		
SNN_SPARE_68	BL36		
SNN_SPARE_69	BL45		
SNN_SPARE_70	BN22		
SNN_SPARE_71	BN26		
SNN_SPARE_72	BN29		
SNN_SPARE_73	L13		
SNN_SPARE_74	L14		

TESTMODE — BG42 — GPU_TESTMODE

RFU (GND) — BP26

R728 10K 5% 0402 COMMON

GND GND

NVIOx SECTION GND

USO — BGA_0523_P080_230X230_G3_064B COMMON — 15/17_GND

AA2	GND		R2
AB26	GND		T26
AC11	GND		U23
AC14	GND		U5
AC17	GND		V2
AC20	GND		W11
AC23	GND		W12
AC5	GND		W14
AC8	GND		W16
AD2	GND		W17
AE26	GND		W19
AF12	GND		W26
AF15	GND		W9
AF18	GND		Y23
AF21	GND		Y5
AF24	GND		M13
AF3	GND		M15
AF6	GND		M16
AF9	GND		N11
B10	GND		N12
B13	GND		N13
B16	GND		N14
B19	GND		N15
B22	GND		N16
B25	GND		P11
B4	GND		P12
B7	GND		P13
C2	GND		P14
D12	GND		P15
D26	GND		P16
D8	GND		P17
E11	GND		R12
E14	GND		R13
E17	GND		R14
E20	GND		R15
E23	GND		R16
E5	GND		R17
E8	GND		T12
E9	GND		T13
F10	GND		T15
F2	GND		
G26	GND		
H23	GND		
H5	GND		
J11	GND		
J12	GND		
J14	GND		
J16	GND		
J17	GND		
J19	GND		
J2	GND		
J9	GND		
K26	GND		
L23	GND		
L5	GND		
M2	GND		
N26	GND		
P19	GND		
P23	GND		
P5	GND		

GND GND

USP — BGA_0523_P080_230X230_G3_064B COMMON — 16/17 NC

SNN_NVIO_NC_01	A10	NC	E7
SNN_NVIO_NC_02	A12	NC	E11
SNN_NVIO_NC_03	AB21	NC	F12
SNN_NVIO_NC_04	AB8	NC	F13
SNN_NVIO_NC_05	AB9	NC	F14
SNN_NVIO_NC_06	AC21	NC	F21
SNN_NVIO_NC_07	AC22	NC	F22
SNN_NVIO_NC_08	AC24	NC	F7
SNN_NVIO_NC_09	AC7	NC	F8
SNN_NVIO_NC_10	AD27	NC	F9
SNN_NVIO_NC_11	AF25	NC	G23
SNN_NVIO_NC_12	B11	NC	H22
SNN_NVIO_NC_13	B12	NC	J23
SNN_NVIO_NC_14	B14	NC	K23
SNN_NVIO_NC_15	C10	NC	K24
SNN_NVIO_NC_16	C12	NC	L22
SNN_NVIO_NC_17	C13	NC	N6
SNN_NVIO_NC_18	C18	NC	N6
SNN_NVIO_NC_19	C4	NC	N9
SNN_NVIO_NC_20	C9	NC	P22
SNN_NVIO_NC_21	D10	NC	P3
SNN_NVIO_NC_22	D11	NC	R6
SNN_NVIO_NC_23	D13	NC	T3
SNN_NVIO_NC_24	D14	NC	T6
SNN_NVIO_NC_25	D7	NC	U22
SNN_NVIO_NC_26	D9	NC	U24
SNN_NVIO_NC_27	E10	NC	U4
SNN_NVIO_NC_28	E12	NC	V6
SNN_NVIO_NC_29	E13	NC	W6
SNN_NVIO_NC_30	E21	NC	Y22
		NC	Y24

SNN_NVIO_NC_31, SNN_NVIO_NC_32, SNN_NVIO_NC_33, SNN_NVIO_NC_34, SNN_NVIO_NC_35, SNN_NVIO_NC_36, SNN_NVIO_NC_37, SNN_NVIO_NC_38, SNN_NVIO_NC_39, SNN_NVIO_NC_40, SNN_NVIO_NC_41, SNN_NVIO_NC_42, SNN_NVIO_NC_43, SNN_NVIO_NC_44, SNN_NVIO_NC_45, SNN_NVIO_NC_46, SNN_NVIO_NC_47, SNN_NVIO_NC_48, SNN_NVIO_NC_49, SNN_NVIO_NC_50, SNN_NVIO_NC_51, SNN_NVIO_NC_52, SNN_NVIO_NC_53, SNN_NVIO_NC_54, SNN_NVIO_NC_55, SNN_NVIO_NC_56, SNN_NVIO_NC_57, SNN_NVIO_NC_58, SNN_NVIO_NC_59, SNN_NVIO_NC_60, SNN_NVIO_NC_61

GND GND

ASSEMBLY	BASE LEVEL GENERIC SCHEMATIC ONLY, COMMON & NO_STUFF ASSEMBLY NOTES AND BOM NOT FINAL
PAGE DETAIL	Power and GND (GPU and NVIOx)

ALL NVIDIA DESIGN SPECIFICATIONS, REFERENCE SPECIFICATIONS, REFERENCE BOARDS, FILES, DRAWINGS, DIAGNOSTICS, LISTS AND OTHER DOCUMENTS OR INFORMATION (TOGETHER AND SEPARATELY, "MATERIALS") ARE BEING PROVIDED "AS IS". THE MATERIALS MAY CONTAIN KNOWN AND UNKNOWN VIOLATIONS OR DEVIATIONS OF INDUSTRY STANDARDS AND SPECIFICATIONS. NVIDIA MAKES NO WARRANTIES, EXPRESSED, IMPLIED, STATUTORY OR OTHERWISE WITH RESPECT TO THE MATERIALS OR OTHERWISE, AND EXPRESSLY DISCLAIMS ALL IMPLIED WARRANTIES INCLUDING, WITHOUT LIMITATION, THE WARRANTIES OF DESIGN, OF NONINFRINGEMENT, MERCHANTABILITY OR FITNESS FOR A PARTICULAR PURPOSE, OR ARISING FROM A COURSE OF DEALING, TRADE USAGE, TRADE PRACTICE, OR INDUSTRY STANDARDS.

Micro-Star International Co., LTD.

<Title>

Size	Document Number	Rev
Custom	<Doc>	<FevCode>

Date: Friday, June 05, 2009 | Sheet 31 of 41

Power: Hybrid Power

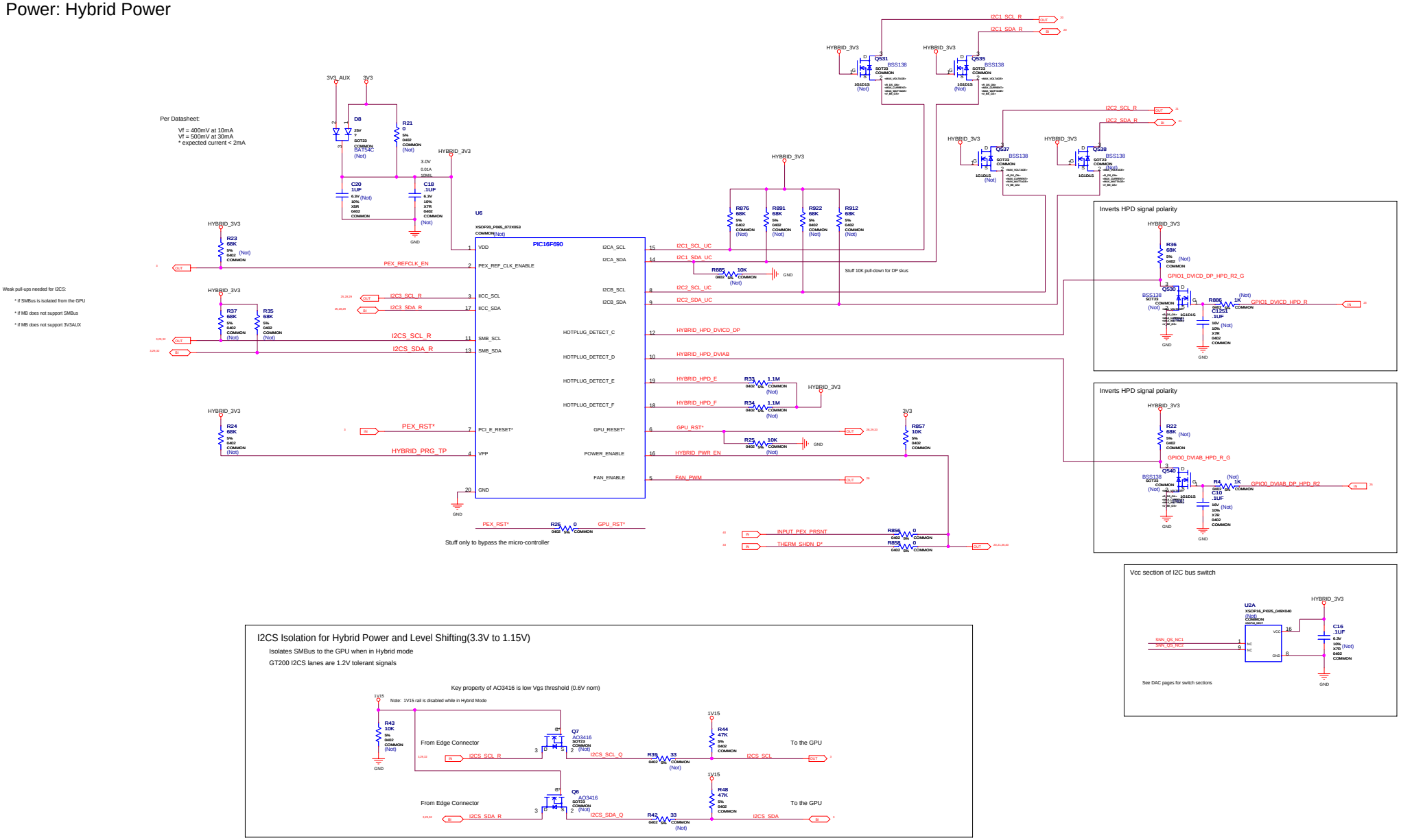

I2CS Isolation for Hybrid Power and Level Shifting(3.3V to 1.15V)

Isolates SMBus to the GPU when in Hybrid mode

GT200 I2CS lanes are 1.2V tolerant signals

ALL NVIDIA DESIGN SPECIFICATIONS, REFERENCE SPECIFICATIONS, REFERENCE BOARDS, FILES, DRAWINGS, DIAGNOSTICS, LISTS AND OTHER DOCUMENTS OR INFORMATION (TOGETHER AND SEPARATELY, "MATERIALS") ARE BEING PROVIDED "AS IS". THE MATERIALS MAY CONTAIN KNOWN AND UNKNOWN VIOLATIONS OR DEVIATIONS OF INDUSTRY STANDARDS AND SPECIFICATIONS. NVIDIA MAKES NO WARRANTIES, EXPRESSED, IMPLIED, STATUTORY OR OTHERWISE WITH RESPECT TO THE MATERIALS OR OTHERWISE, AND EXPRESSLY DISCLAIMS ALL IMPLIED WARRANTIES INCLUDING, WITHOUT LIMITATION, THE WARRANTIES OF DESIGN, OF NONINFRINGEMENT, MERCHANTABILITY OR FITNESS FOR A PARTICULAR PURPOSE, OR ARISING FROM A COURSE OF DEALING, TRADE USAGE, TRADE PRACTICE, OR INDUSTRY STANDARDS.

ASSEMBLY	BASE LEVEL GENERIC SCHEMATIC ONLY, COMMON & NO_STUFF ASSEMBLY NOTES AND BOM NOT FINAL
PAGE DETAIL	Power: Hybrid Power

Micro-Star International Co., LTD.

<Title>

Size	Document Number	Rev
Custom	<Doc>	<FevCode>

Date: Friday, June 05, 2009 Sheet 32 of 41

Power Supply: 5V LDO / 3V3_DP / THERM SHUTDOWN LATCH / IFP_IOVDD /PEX_PLVDD

5V Linear

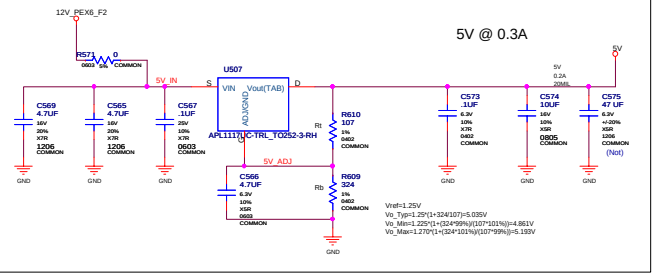

THERM OVERT SHUTDOWN LATCH

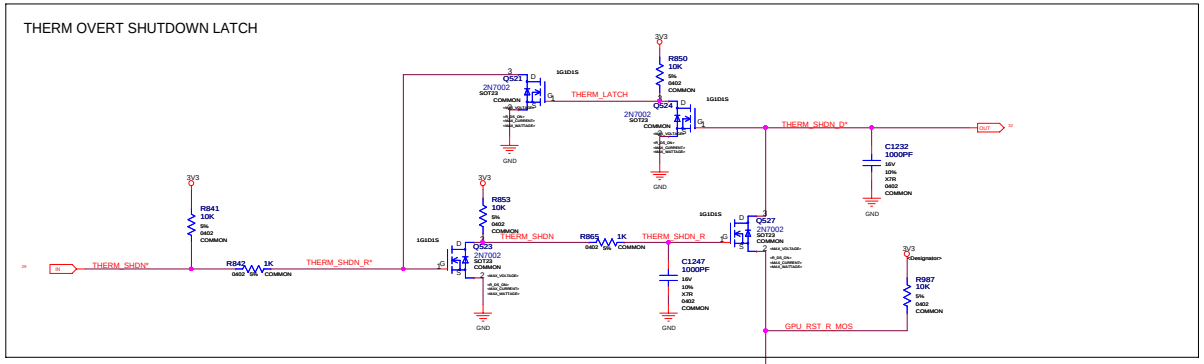

PEX PLLVDD optional Supply

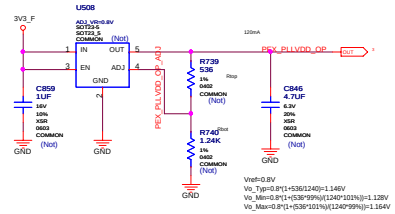

DDC_5V

5V @ 200mA

DCR_MAX=0.4OHM
TRIP_TIME=0.15@20C.8A
CONTINUOUS_CURRENT=0.5A@20C

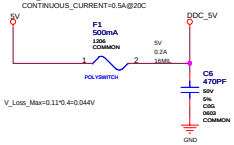

V_Loss_Max=0.11*0.4=0.044V

IFP_IOVDD (backdrive prevention)

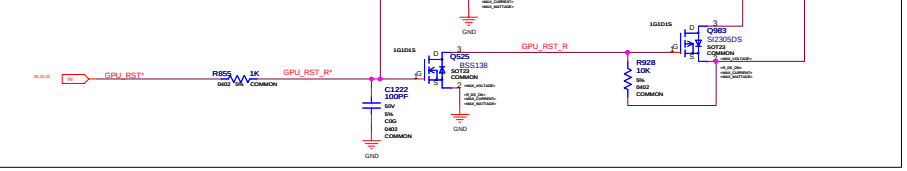

3V3_DP SWITCHER

(Only required for DisplayPort SKU)

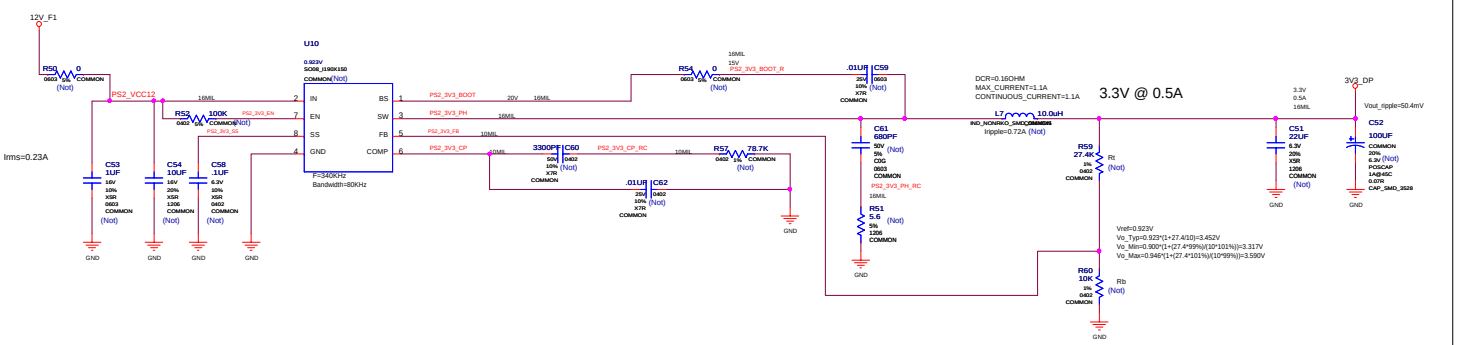

ASSEMBLY	BASE LEVEL GENERIC SCHEMATIC ONLY, COMMON & NO_STUFF ASSEMBLY NOTES AND BOM NOT FINAL
PAGE DETAIL	Power Supply: 5V + 5V Alt / SHDN LATCH / IFP_IOVDD

ALL NVIDIA DESIGN SPECIFICATIONS, REFERENCE SPECIFICATIONS, REFERENCE BOARDS, FILES, DRAWINGS, DIAGNOSTICS, LISTS AND OTHER DOCUMENTS OR INFORMATION (TOGETHER AND SEPARATELY, "MATERIALS") ARE BEING PROVIDED "AS IS". THE MATERIALS MAY CONTAIN KNOWN AND UNKNOWN VIOLATIONS OR DEVIATIONS OF INDUSTRY STANDARDS AND SPECIFICATIONS. NVIDIA MAKES NO WARRANTIES, EXPRESSED, IMPLIED, STATUTORY OR OTHERWISE WITH RESPECT TO THE MATERIALS OR OTHERWISE, AND EXPRESSLY DISCLAIMS ALL IMPLIED WARRANTIES INCLUDING, WITHOUT LIMITATION, THE WARRANTIES OF DESIGN, OF NONINFRINGEMENT, MERCHANTABILITY OR FITNESS FOR A PARTICULAR PURPOSE, OR ARISING FROM A COURSE OF DEALING, TRADE USAGE, TRADE PRACTICE, OR INDUSTRY STANDARDS.

Micro-Star International Co., LTD.

<Title>

Size	Document Number	Rev
Custom	<Doc>	<FevCode>

Date: Friday, June 05, 2009 | Sheet 33 of 41

Power Supply: 2V5, DP_PWR, 8V5 1V15 (PEX_VDD, GV_VDD)

2V5

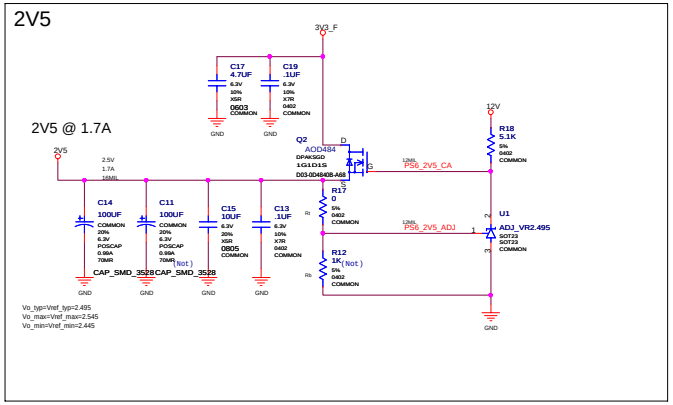

DP Dongle Supply

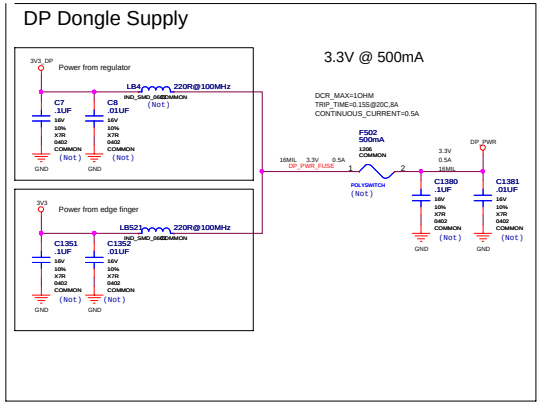

8V5

11/21:remove 8V5 circuit

1V15 (PEX_VDD AND GV_VDD/Q) and 1V8(For Analogix)

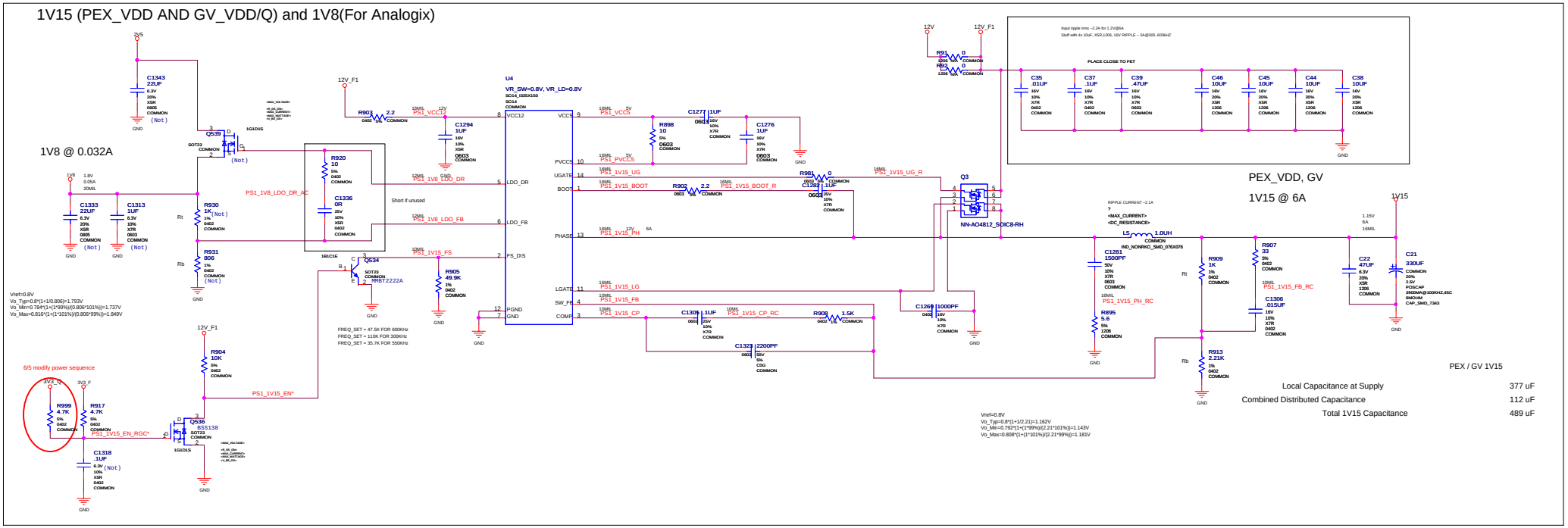

PEX / GV 1V15

Local Capacitance at Supply	377 uF
Combined Distributed Capacitance	112 uF
Total 1V15 Capacitance	489 uF

ASSEMBLY	BASE LEVEL GENERIC SCHEMATIC ONLY, COMMON & NO_STUFF ASSEMBLY NOTES AND BOM NOT FINAL
PAGE DETAIL	Power Supply: 2V5, DP_PWR, 1V15 (PEX_VDD, GV_VDD)

ALL NVIDIA DESIGN SPECIFICATIONS, REFERENCE SPECIFICATIONS, REFERENCE BOARDS, FILES, DRAWINGS, DIAGNOSTICS, LISTS AND OTHER DOCUMENTS OR INFORMATION (TOGETHER AND SEPARATELY, "MATERIALS") ARE BEING PROVIDED "AS IS". THE MATERIALS MAY CONTAIN KNOWN AND UNKNOWN VIOLATIONS OR DEVIATIONS OF INDUSTRY STANDARDS AND SPECIFICATIONS. NVIDIA MAKES NO WARRANTIES, EXPRESSED, IMPLIED, STATUTORY OR OTHERWISE WITH RESPECT TO THE MATERIALS OR OTHERWISE, AND EXPRESSLY DISCLAIMS ALL IMPLIED WARRANTIES INCLUDING, WITHOUT LIMITATION, THE WARRANTIES OF DESIGN, OF NONINFRINGEMENT, MERCHANTABILITY OR FITNESS FOR A PARTICULAR PURPOSE, OR ARISING FROM A COURSE OF DEALING, TRADE USAGE, TRADE PRACTICE, OR INDUSTRY STANDARDS.

Micro-Star International Co., LTD.
<Title>
Size: Custom | Document Number: <Doc> | Rev: <FevCode>
Date: Friday, June 05, 2009 | Sheet 34 of 41

Power Supply: Combined FBVDD/Q

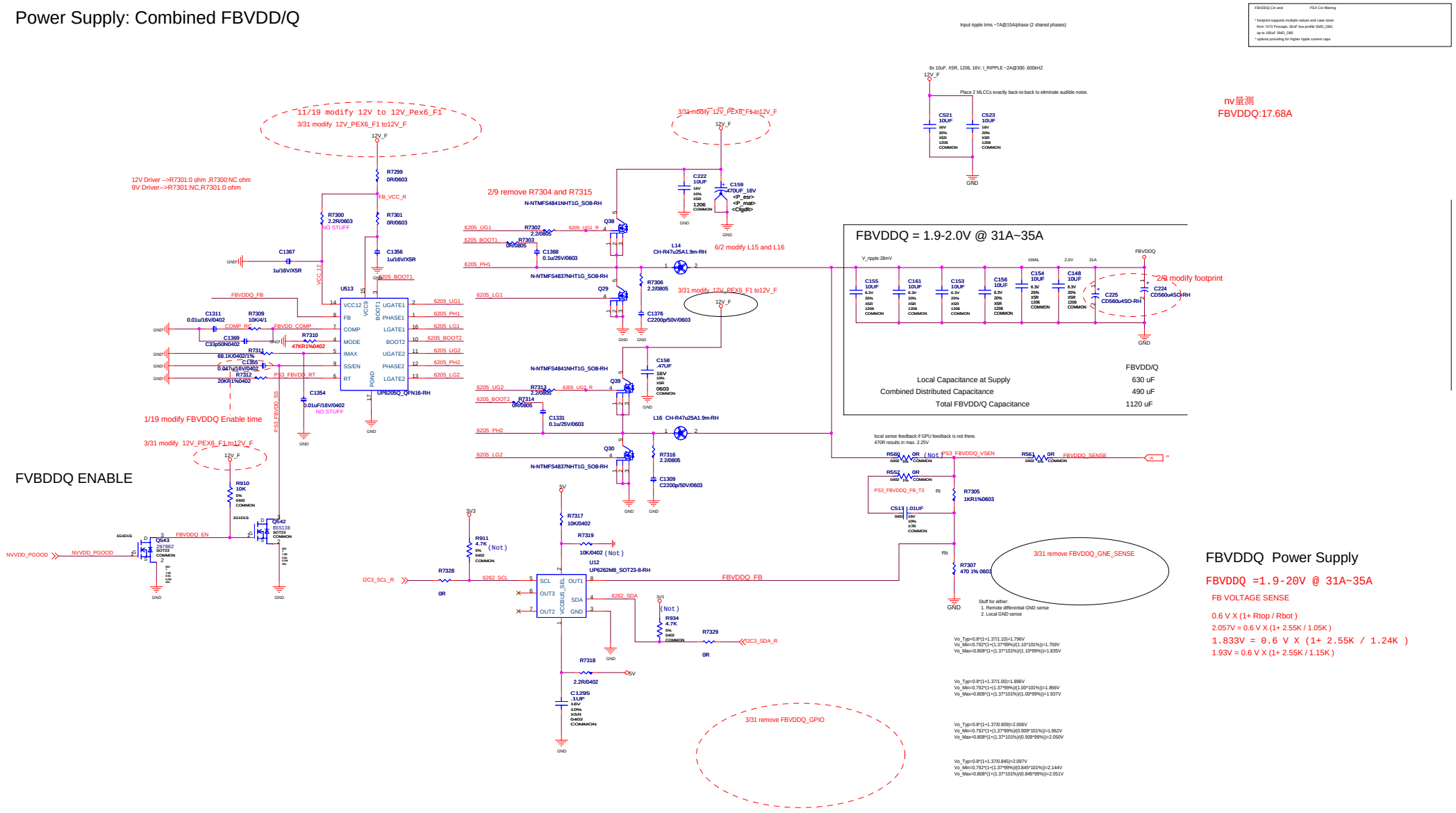

ALL NVIDIA DESIGN SPECIFICATIONS, REFERENCE SPECIFICATIONS, REFERENCE BOARDS, FILES, DRAWINGS, DIAGNOSTICS, LISTS AND OTHER DOCUMENTS OR INFORMATION (TOGETHER AND SEPARATELY, "MATERIALS") ARE BEING PROVIDED "AS IS". THE MATERIALS MAY CONTAIN KNOWN AND UNKNOWN VIOLATIONS OR DEVIATIONS OF INDUSTRY STANDARDS AND SPECIFICATIONS. NVIDIA MAKES NO WARRANTIES, EXPRESSED, IMPLIED, STATUTORY OR OTHERWISE WITH RESPECT TO THE MATERIALS OR OTHERWISE, AND EXPRESSLY DISCLAIMS ALL IMPLIED WARRANTIES INCLUDING, WITHOUT LIMITATION, THE WARRANTIES OF DESIGN, OF NONINFRINGEMENT, MERCHANTABILITY OR FITNESS FOR A PARTICULAR PURPOSE, OR ARISING FROM A COURSE OF DEALING, TRADE USAGE, TRADE PRACTICE, OR INDUSTRY STANDARDS.

ASSEMBLY PAGE DETAIL: BASE LEVEL GENERIC SCHEMATIC ONLY, COMMON & NO_STUFF ASSEMBLY NOTES AND BOM NOT FINAL
Power Supply: Combined FBVDD/Q

Micro-Star International Co., LTD.
<Title>
Size: Custom | Document Number: <Doc> | Rev: <FevCode>
Date: Friday, June 05, 2009 | Sheet 35 of 41

Power Supply: NVVDD Regulator

5/22 modify VID circuit .

nv量測
NVVDD:91.62A
diag:112.1A

1/19 modify net mane 12VE2_F -> 12V_PEX6_F2

1/19 modify 0603->0402

11/19 modify pull high 3.3v

VTT=1.5K/12K=1.5V

11/20 modify 值

R1006 不上會容易觸發OVP

2/3 add

2/19 modify
6/11 modify

Closed CHOCK

11/20 remove R1013 and R1014 and Q1002 and R546

1/19 modify net mane 12VE2_F -> 12V_PEX^_F2

2/19 modify 值

GTS 260 VID

GPIO[7..5]=000==>1.025V
GPIO[7..5]=100==>1.125V
GPIO[7..5]=001==>1.05V
GPIO[7..5]=010==>1.0625V
12/05 modify GPIO 7:5 三種電壓mode

GTS 275

GPIO[10..5]=0000==>1.1875V
GPIO[10..5]=0101==>1.125V
GPIO[10..5]=1011==>1.05V
GPIO[10..5]=0001==>1.175V

GT200-103-B3

	BOOT VOLTAGE	1.1875V	0	0	0	0
VB0	3D MODE, P0 MODE;	1.1750V	0	0	0	1
VB1	3D MODE, P0 MODE;	1.1250V	0	1	0	1
VB0/VB1	2D MODE, P8 MODE; 2D MODE, P12 MODE; 2D MODE, DOS;	1.0500V	1	0	1	1

NVVDD Voltage Select

Regulator: NCP5388
Control via NV_GPIOs [1..0]

VID	NVVDD		
5 4 3 2 1 0			
0 1 1 0 0 1	1.23750	(OFFSET 200mV)	
0 0 0 0 0 1	1.0500		VOLTAGE1
0 0 0 1 1 0	0.93750	(OFFSET -100mV)	
0 1 1 0 0 0	1.26250	(OFFSET 200mV)	
0 0 0 0 0 1	1.06250		VOLTAGE2
0 0 0 1 0 1	0.96250	(OFFSET -100mV)	
1 1 0 1 0 1	1.32500	(OFFSET 200mV)	
1 1 1 1 0 1	1.12500		VOLTAGE3
1 0 0 0 1 0	1.02500	(OFFSET -100mV)	
0 1 0 0 1 1	1.38750	(OFFSET 200mV)	
0 1 1 0 1 1	1.18750		DEFAULT
0 0 0 0 0 0	1.08750	(OFFSET -100mV)	

2/6 ADD

ISP1	R1035	3KR1%0402	PWM_OUT12
ISP2	R1036	3KR1%0402	PWM_OUT12
ISP3	R1033	3KR1%0402	PWM_OUT34
ISP4	R1038	3KR1%0402	PWM_OUT34
ISP5	R1039	3KR1%0402	PWM_OUT56
ISP6	R1040	3KR1%0402	PWM_OUT56
ISP7	R1041	3KR1%0402	PWM_OUT78
ISP8	R1042	3KR1%0402	PWM_OUT78

ALL NVIDIA DESIGN SPECIFICATIONS, REFERENCE SPECIFICATIONS, REFERENCE BOARDS, FILES, DRAWINGS, DIAGNOSTICS, LISTS AND OTHER DOCUMENTS OR INFORMATION (TOGETHER AND SEPARATELY, "MATERIALS") ARE BEING PROVIDED "AS IS". THE MATERIALS MAY CONTAIN KNOWN AND UNKNOWN VIOLATIONS OR DEVIATIONS OF INDUSTRY STANDARDS AND SPECIFICATIONS. NVIDIA MAKES NO WARRANTIES, EXPRESSED, IMPLIED, STATUTORY OR OTHERWISE WITH RESPECT TO THE MATERIALS OR OTHERWISE, AND EXPRESSLY DISCLAIMS ALL IMPLIED WARRANTIES INCLUDING, WITHOUT LIMITATION, THE WARRANTIES OF DESIGN, OF NONINFRINGEMENT, MERCHANTABILITY OR FITNESS FOR A PARTICULAR PURPOSE, OR ARISING FROM A COURSE OF DEALING, TRADE USAGE, TRADE PRACTICE, OR INDUSTRY STANDARDS.

ASSEMBLY: BASE LEVEL GENERIC SCHEMATIC ONLY, COMMON & NO_STUFF ASSEMBLY NOTES AND BOM NOT FINAL
PAGE DETAIL: Power Supply: NVVDD REGULATOR

Micro-Star International Co., LTD.
<Title>
Size: Custom | Document Number: <Doc> | Rev: <FevCode>
Date: Thursday, June 11, 2009 | Sheet 36 of 41

Power Supply: NVVDD Phase 1,2 powered from external PEX 6PIN

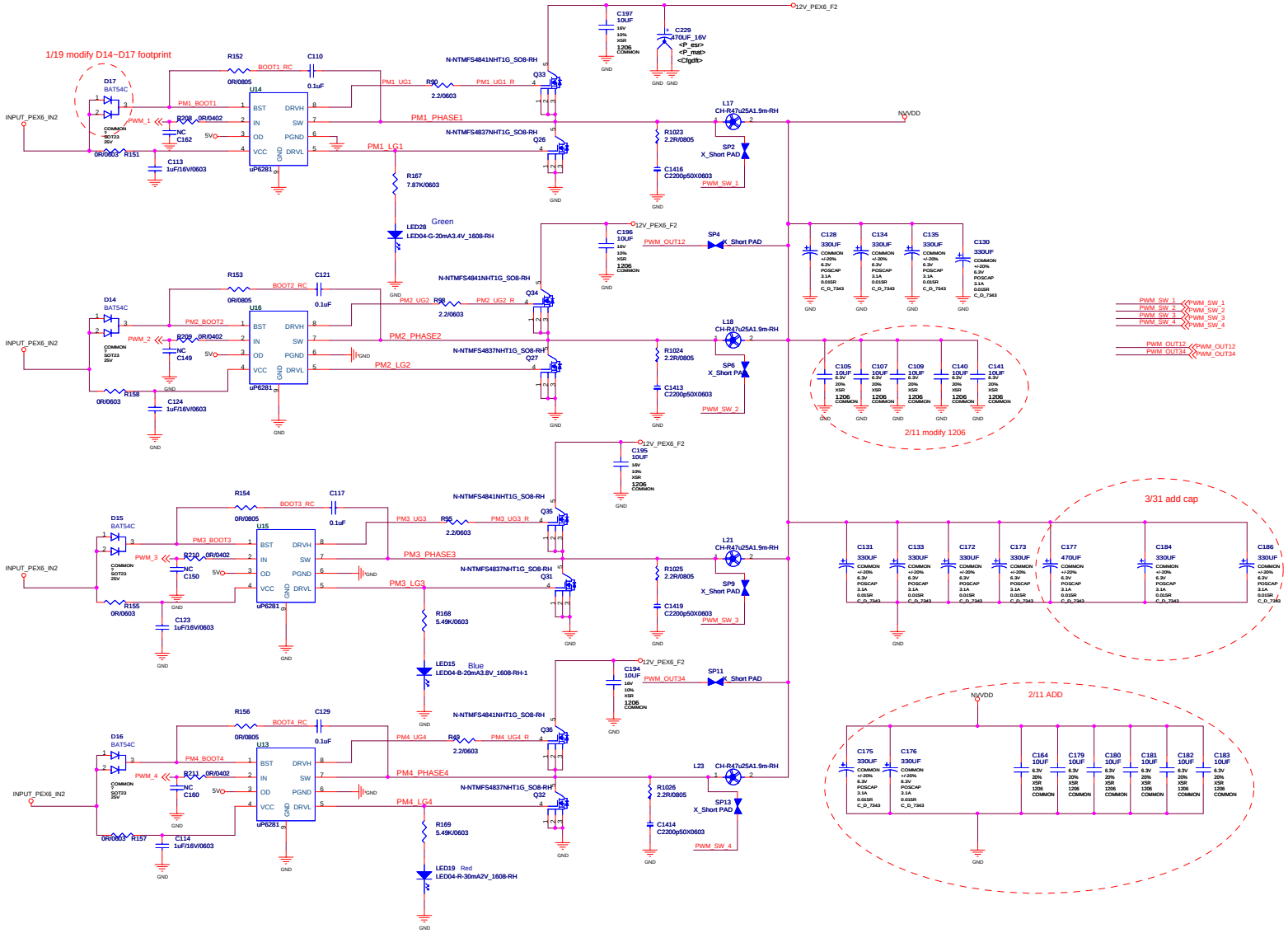

ASSEMBLY	BASE LEVEL GENERIC SCHEMATIC ONLY, COMMON & NO_STUFF ASSEMBLY NOTES AND BOM NOT FINAL
PAGE DETAIL	Power Supply: NVVDD Phase 1-2 of 4

ALL NVIDIA DESIGN SPECIFICATIONS, REFERENCE SPECIFICATIONS, REFERENCE BOARDS, FILES, DRAWINGS, DIAGNOSTICS, LISTS AND OTHER DOCUMENTS OR INFORMATION (TOGETHER AND SEPARATELY, "MATERIALS") ARE BEING PROVIDED "AS IS". THE MATERIALS MAY CONTAIN KNOWN AND UNKNOWN VIOLATIONS OR DEVIATIONS OF INDUSTRY STANDARDS AND SPECIFICATIONS. NVIDIA MAKES NO WARRANTIES, EXPRESSED, IMPLIED, STATUTORY OR OTHERWISE WITH RESPECT TO THE MATERIALS OR OTHERWISE, AND EXPRESSLY DISCLAIMS ALL IMPLIED WARRANTIES INCLUDING, WITHOUT LIMITATION, THE WARRANTIES OF DESIGN, OF NONINFRINGEMENT, MERCHANTABILITY OR FITNESS FOR A PARTICULAR PURPOSE, OR ARISING FROM A COURSE OF DEALING, TRADE USAGE, TRADE PRACTICE, OR INDUSTRY STANDARDS.

Micro-Star International Co., LTD.

<Title>

Size	Document Number	Rev
Custom	<Doc>	<FevCode>

Date: Thursday, June 18, 2009 | Sheet 37 of 41

Power Supply: NVVDD Phase 5~8 powered from internal PEX edge connector

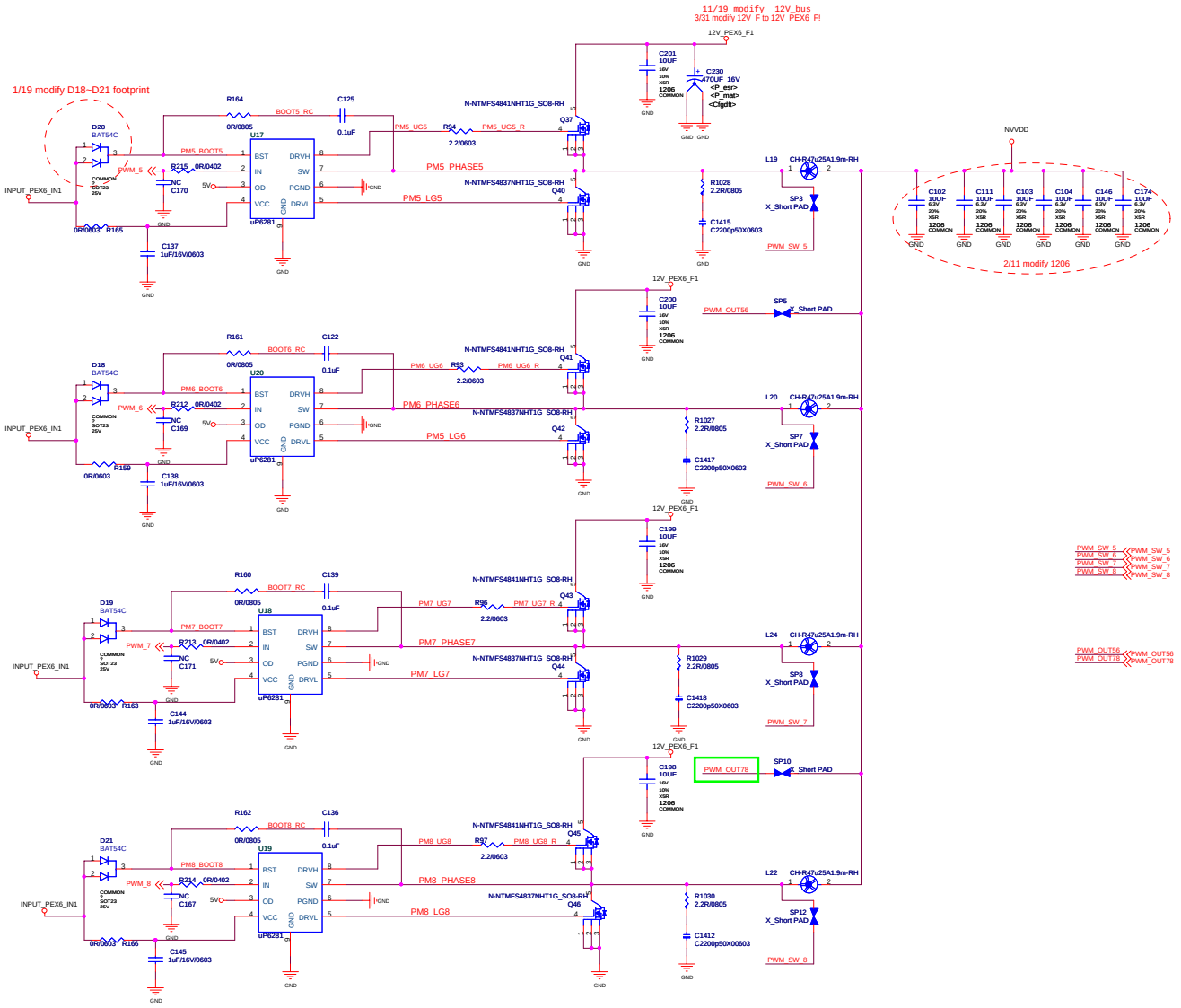

ALL NVIDIA DESIGN SPECIFICATIONS, REFERENCE SPECIFICATIONS, REFERENCE BOARDS, FILES, DRAWINGS, DIAGNOSTICS, LISTS AND OTHER DOCUMENTS OR INFORMATION (TOGETHER AND SEPARATELY, "MATERIALS") ARE BEING PROVIDED "AS IS". THE MATERIALS MAY CONTAIN KNOWN AND UNKNOWN VIOLATIONS OR DEVIATIONS OF INDUSTRY STANDARDS AND SPECIFICATIONS. NVIDIA MAKES NO WARRANTIES, EXPRESSED, IMPLIED, STATUTORY OR OTHERWISE WITH RESPECT TO THE MATERIALS OR OTHERWISE, AND EXPRESSLY DISCLAIMS ALL IMPLIED WARRANTIES INCLUDING, WITHOUT LIMITATION, THE WARRANTIES OF DESIGN, OF NONINFRINGEMENT, MERCHANTABILITY OR FITNESS FOR A PARTICULAR PURPOSE, OR ARISING FROM A COURSE OF DEALING, TRADE USAGE, TRADE PRACTICE, OR INDUSTRY STANDARDS.

ASSEMBLY	BASE LEVEL GENERIC SCHEMATIC ONLY, COMMON & NO_STUFF ASSEMBLY NOTES AND BOM NOT FINAL
PAGE DETAIL	Power Supply: NVVDD Phase 3-4 of 4

Micro-Star International Co., LTD.

<Title>

Size	Document Number	Rev
Custom	<Doc>	<FevCode>

Date: Thursday, June 18, 2009 Sheet 38 of 41

Power Supply: NVVDD power control

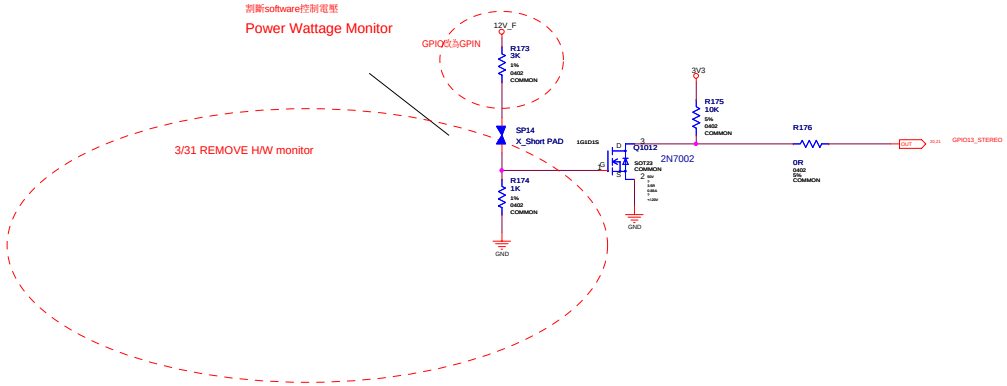

NVVDD & FBVDDQ SENSE/MSUR

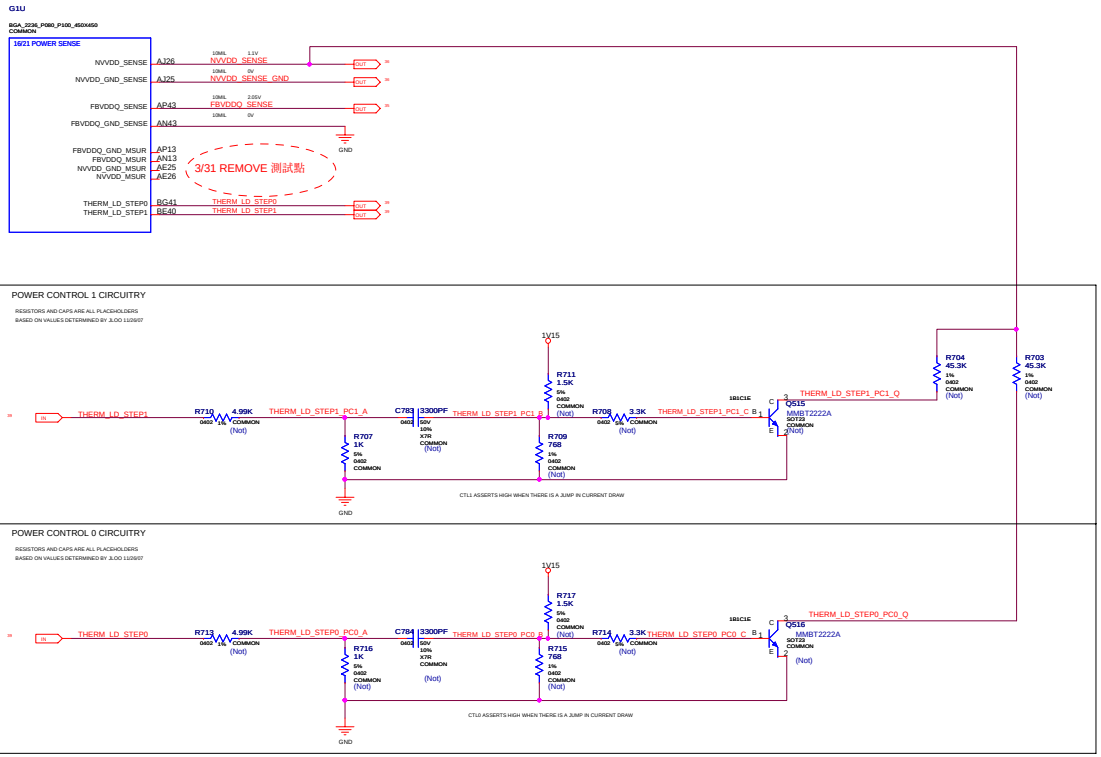

ASSEMBLY	BASE LEVEL GENERIC SCHEMATIC ONLY, COMMON & NO_STUFF ASSEMBLY NOTES AND BOM NOT FINAL
PAGE DETAIL	NVVDD & FBVDDQ SENSE/MSUR

ALL NVIDIA DESIGN SPECIFICATIONS, REFERENCE SPECIFICATIONS, REFERENCE BOARDS, FILES, DRAWINGS, DIAGNOSTICS, LISTS AND OTHER DOCUMENTS OR INFORMATION (TOGETHER AND SEPARATELY, "MATERIALS") ARE BEING PROVIDED "AS IS". THE MATERIALS MAY CONTAIN KNOWN AND UNKNOWN VIOLATIONS OR DEVIATIONS OF INDUSTRY STANDARDS AND SPECIFICATIONS. NVIDIA MAKES NO WARRANTIES, EXPRESSED, IMPLIED, STATUTORY OR OTHERWISE WITH RESPECT TO THE MATERIALS OR OTHERWISE, AND EXPRESSLY DISCLAIMS ALL IMPLIED WARRANTIES INCLUDING, WITHOUT LIMITATION, THE WARRANTIES OF DESIGN, OF NONINFRINGEMENT, MERCHANTABILITY OR FITNESS FOR A PARTICULAR PURPOSE, OR ARISING FROM A COURSE OF DEALING, TRADE USAGE, TRADE PRACTICE, OR INDUSTRY STANDARDS.

Micro-Star International Co., LTD.

<Title>

Size	Document Number	Rev
Custom	<Doc>	<FevCode>

Date: Friday, June 05, 2009 | Sheet 39 of 41

Power: Input Rail Filter and Detection Logic

Connector Power State Table

2x3 Connector	2x3 Connector		Power	STATE
Connected	Connected		225W	Full Perf
Connected	Not Connected		150W	Board Off
Not Connected	Connected		150W	Board Off
Not Connected	Not Connected		75W	Board Off

PEX_12V INPUT - 66W

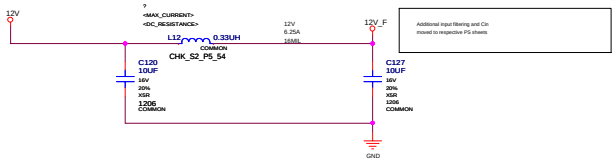

PEX 3V3 INPUT - 10W

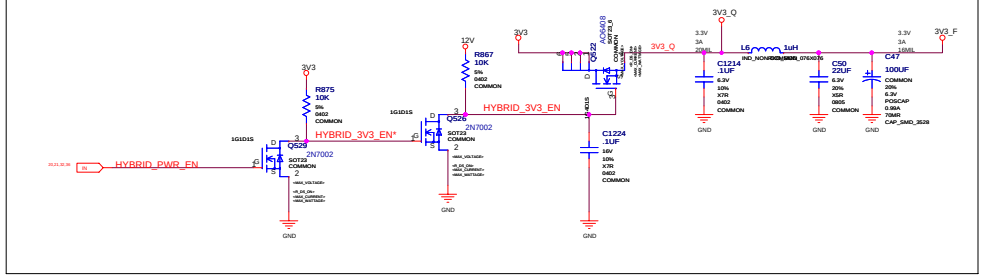

PEX6 INPUT 1 - 2x3 PCIE CON 75W

MUST BE ATTACHED AND POWERED TO START BOARD

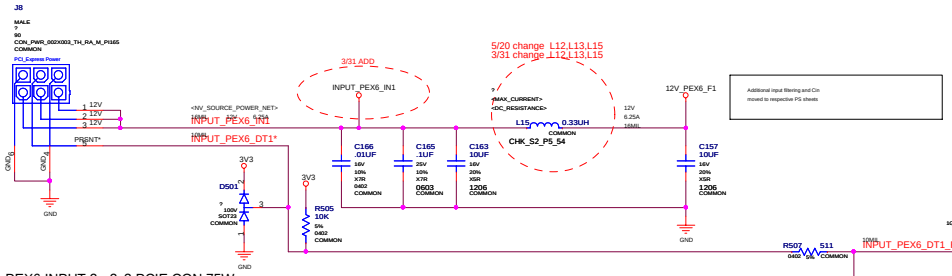

PEX6 INPUT 2 - 2x3 PCIE CON 75W

MUST BE ATTACHED AND POWERED TO START BOARD

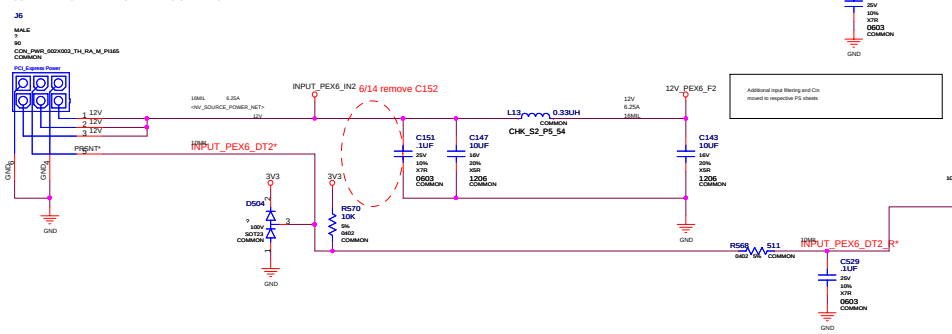

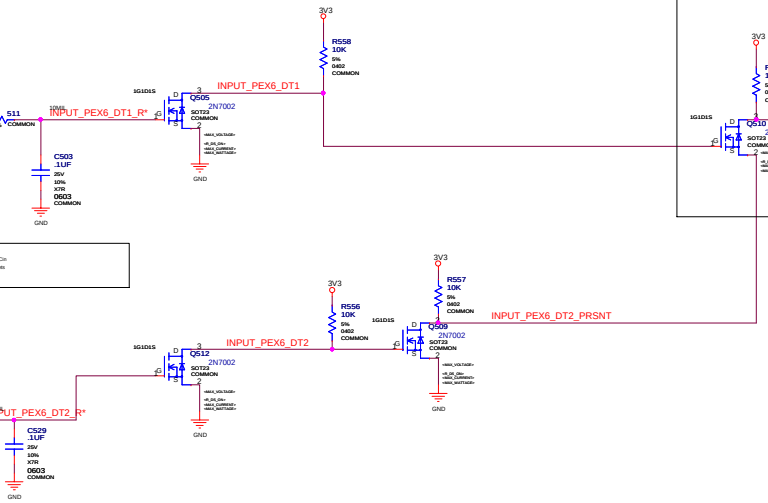

Summary PEX input present

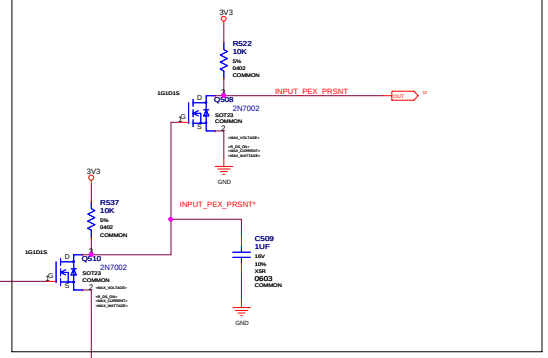

ALL NVIDIA DESIGN SPECIFICATIONS, REFERENCE SPECIFICATIONS, REFERENCE BOARDS, FILES, DRAWINGS, DIAGNOSTICS, LISTS AND OTHER DOCUMENTS OR INFORMATION (TOGETHER AND SEPARATELY, 'MATERIALS') ARE BEING PROVIDED 'AS IS'. THE MATERIALS MAY CONTAIN KNOWN AND UNKNOWN VIOLATIONS OR DEVIATIONS OF INDUSTRY STANDARDS AND SPECIFICATIONS. NVIDIA MAKES NO WARRANTIES, EXPRESSED, IMPLIED, STATUTORY OR OTHERWISE WITH RESPECT TO THE MATERIALS OR OTHERWISE, AND EXPRESSLY DISCLAIMS ALL IMPLIED WARRANTIES INCLUDING, WITHOUT LIMITATION, THE WARRANTIES OF DESIGN, OF NONINFRINGEMENT, MERCHANTABILITY OR FITNESS FOR A PARTICULAR PURPOSE, OR ARISING FROM A COURSE OF DEALING, TRADE USAGE, TRADE PRACTICE, OR INDUSTRY STANDARDS.

ASSEMBLY	BASE LEVEL GENERIC SCHEMATIC ONLY, COMMON & NO_STUFF ASSEMBLY NOTES AND BOM NOT FINAL
PAGE DETAIL	Power: Input Rail Filter and Detection Logic

Micro-Star International Co., LTD.

<Title>

Size	Document Number	Rev
Custom	<Doc>	<FevCode>

Date: Sunday, June 14, 2009 | Sheet 40 of 41

Thermal/Mechanical/ID

Bracket and Assembly

GPU Socket

GPU Stiffener

NVIOx Socket

Hockey Stick Retention Mechanism

EMI Gnd Clips

Top Side Clips

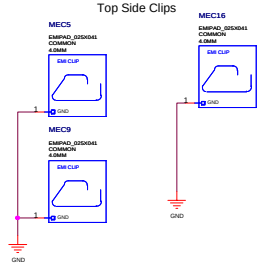

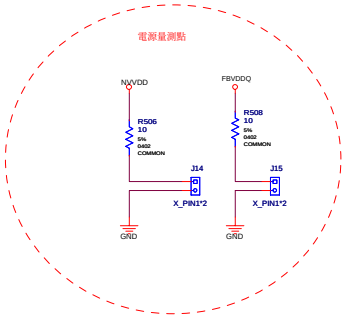

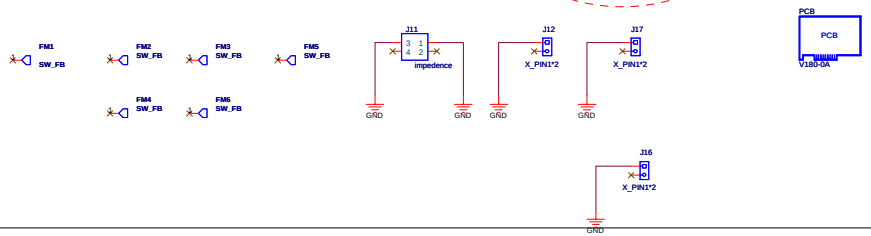

THERMAL/MECHANICAL HOLES

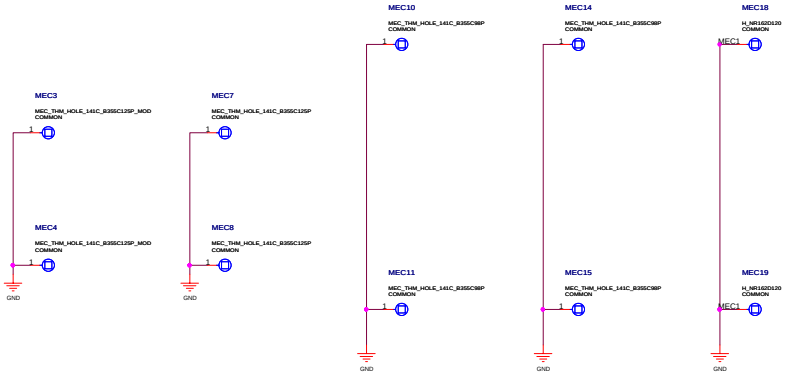

ASSEMBLY	BASE LEVEL GENERIC SCHEMATIC ONLY, COMMON & NO_STUFF ASSEMBLY NOTES AND BOM NOT FINAL
PAGE DETAIL	Thermal/Mechanical

ALL NVIDIA DESIGN SPECIFICATIONS, REFERENCE SPECIFICATIONS, REFERENCE BOARDS, FILES, DRAWINGS, DIAGNOSTICS, LISTS AND OTHER DOCUMENTS OR INFORMATION (TOGETHER AND SEPARATELY, "MATERIALS") ARE BEING PROVIDED "AS IS". THE MATERIALS MAY CONTAIN KNOWN AND UNKNOWN VIOLATIONS OR DEVIATIONS OF INDUSTRY STANDARDS AND SPECIFICATIONS. NVIDIA MAKES NO WARRANTIES, EXPRESSED, IMPLIED, STATUTORY OR OTHERWISE WITH RESPECT TO THE MATERIALS OR OTHERWISE, AND EXPRESSLY DISCLAIMS ALL IMPLIED WARRANTIES INCLUDING, WITHOUT LIMITATION, THE WARRANTIES OF DESIGN, OF NONINFRINGEMENT, MERCHANTABILITY OR FITNESS FOR A PARTICULAR PURPOSE, OR ARISING FROM A COURSE OF DEALING, TRADE USAGE, TRADE PRACTICE, OR INDUSTRY STANDARDS.

Micro-Star International Co., LTD.
<Title>
Size: Custom | Document Number: <Doc> | Rev: <FavCode>
Date: Friday, June 05, 2009 | Sheet 41 of 41