# P681-A01 GT215/216 DESKTOP GB1-128 DDR3
# PCI-EXPRESSx16 DL-DVI VGA HDMI


Page 1: P681-A01 OVERVIEW
Page 2: PCI-EXPRESS INTERFACE
Page 3: PARTITION A FRAME BUFFER INTERFACE
Page 4: PARTITION A MEMORIES
Page 5: FBA DECOUPLING CAPS & NVVDD DECOUPLING CAPS
Page 6: PARTITION C FRAME BUFFER INTERFACE
Page 7: PARTITION C MEMORIES
Page 8: FBC DECOUPLING CAPS
Page 9: DACA (SOUTH DVI-I)
Page 10: DACB (MID VGA)
Page 11: IFP AB (SOUTH DVI-I)
Page 12: IFP C (NORTH HDMI)
Page 13: IFP D (UNUSED)
Page 14: IFP EF (UNUSED)
Page 15: MIOA & MIOB
Page 16: XTAL, MECHANICALS, THERMALS
Page 17: EXTERNAL THERMAL SENSOR, FAN CONTROL, GPIO, JTAG
Page 18: BIOS ROM, HDCP ROM, STRAPPING OPTIONS
Page 19: LINEAR POWER SUPPLIES
Page 20: FBVDDQ/PEXVDD POWER SUPPLY
Page 21: NVVDD POWER SUPPLY


## Ver. 0A

05/07

Page 01 1.Remove C690,C70 47uF
Page 10 1.Remove J1 D-Sub
Page 11 1.Remove R16,Q2
Page 12 1.Remove R1,Q1
Page 16 1.Change Crystal Footprint to 2-PIN SMD
2.Remove C71 47uF

05/08

Page 17 1.Remove Thermal Sensor Circuit
Page 18 1.Remove U2,C54,R31,R30,D16 INFOROM circuit
Page 19 1.Remove 3V3 to 1.8V circuit
2.Change 5V REGULATOR Circuit
Page 20 1.Change L8 Footprint to 1.6uH
2.Change Footprint to multi cap for EL 1500uF
Page 21 1.Change NVVDD to UP6161
2.Change L12 footprint to 1.2uH

05/10

Page 05 1. Remove Decoupling for EMI cap
Page 20 1. C84 change Footprint to multi cap

05/11

Page 21 1.Add C39 270uF
2.Add R922,R924 for APW7068 OCSET
Page 16 1.Add XTALIN R566 Risister
Add XTALOUT R573 Risister
Page 02 1.Change C51 to 0805 1UF and ADD C54 0805 1UF
Page 03 1.C642,C666,C633 change to .01UF
Page 05 1.Remove C516,C525,C549,C556,C541,C512
Remove C513,C546,C540,C528,C547,C507
Remove C544,C545,C520,C523,C532,C508
Remove C535,C526,C543,C553,C537,C88
Page 08 1.Remove C566,C567,C576,C578,C82,C564
Remove C619,C592,C586,C585,C622,C574
Remove C705,C706,C680,C729,C691,C683
Remove C742,C738,C731,C725,C743,C728
Page 20 1.Remove C86,C562,C563,C87

05/12

Page 17 1.Remove 4-PIN FAN Circuit
Page 12 1.Change Q509 to Q513,Q514 SOT23 footprint
Page 16 1.Change FAN Screw hole
Page 20 1.Add C102 820uF

05/14

Page 21 1.Remove D94 scottky diode

05/19

Page 11 1.Add EMI bridge
Page 12 2.Add EMI bridge

05/21

Page 03 1.Add RP24 termination risister
Page 06 2.Add RP23 termination risister

05/26

SWAP CMD
Page 03/06 RP5.1，RP5.2 FBC_CMD10，RP5.3，RP5.4 FBC_CMD22
RP4.1，RP4.2 FBC_CMD18，RP4.3，RP4.4 FBC_CMD7
RP24.1, RP24.2 FBA_CMD30, RP24.3, RP24.4 FBA_CMD7
RP20.1, RP20.2 FBA_CMD14, RP20.3, RP20.4 FBA_CMD18
RP14.1, RP14.2 FBA_CMD1, RP14.3, RP14.4 FBA_CMD20
RP12.3, RP12.4 FBA_CMD29

05/27

Page 05 1. Add Decoupling for EMI cap C80,C524,C517,C102

## Ver. 10

07/31

Page 02 1.Remove JTAG Circuit
Page 09 1.Remove EMI filter,protection diode,C780,C775,C779
Page 10 1.Remove EMI filter,protection diode,C771,C772,C773
Page 12 1.IFP_PLLVDD change netname to 3V3
Page 15 1.Remove R545,C664,R554 of MIOA
Page 17 1.Remove JTAG Circuit
2.Remove FAN PWM Circuit
Page 18 1.Remove HDCP EEROM
Page 19 1.Remove U4 UP7703 Circuit
2.Change 5V Circuit SOT223-->SOT252
Page 20 1.Remove C86,C105,C90
2.Add R917 LMOS Gate risister
3.Add L10
4.Add L9,LB23,LB24
5.Add EL 680UF FootPrint
Page 21 1.Add L13
2.Remove APW7068 OCSET
3.Add GPIO 5,6 Circuit
4.Remove C927,C931

08/04

Page 21 1.Remove C933,C30,C31,C38
2.Change C39 FootPrint for 470uF
3.NVVDD Power Sequencing and PWM power change to 12V from 12V_F

Page 20 1.Add C86,C87,R26
2.Remove C557
3.Power Sequencing and PWM power change to 12V from 12V_F


ASUS-RMA
華碩公司
20091027


| SKU | VARIANT | NVPN | ASSEMBLY |
|---|---|---|---|
| B | BASE | 600-10681-base-100 | BASE LEVEL GENERIC SCHEMATIC ONLY, COMMON & NO_STUFF ASSEMBLY NOTES AND BOM NOT FINAL |
| 1 | SKU0001 | 600-10681-0001-100 | GT216-300 600/1500MHz 1024MB 64Mx16 BGA100 800MHz DDR3 DVI-I/VGA/HDMI |
| 2 | SKU0002 | 600-10681-0002-100. | GT216-300 600/1500MHz 1024MB 64Mx16 BGA100 1000MHz DDR3 DVI-I/VGA+HDMI |
| 3 | SKU0011 | 600-10681-0011-100 | GT215-300 600/1500MHz 1024MB 64Mx16 BGA100 900MHz DDR3 DVI-I/VGA/HDMI |
| 4 | <UNDEFINED> | <UNDEFINED> | <UNDEFINED> |
| 5 | <UNDEFINED> | <UNDEFINED> | <UNDEFINED> |
| 6 | <UNDEFINED> | <UNDEFINED> | <UNDEFINED> |
| 7 | <UNDEFINED> | <UNDEFINED> | <UNDEFINED> |
| 8 | <UNDEFINED> | <UNDEFINED> | <UNDEFINED> |
| 9 | <UNDEFINED> | <UNDEFINED> | <UNDEFINED> |
| 10 | <UNDEFINED> | <UNDEFINED> | <UNDEFINED> |
| 11 | <UNDEFINED> | <UNDEFINED> | <UNDEFINED> |
| 12 | <UNDEFINED> | <UNDEFINED> | <UNDEFINED> |
| 13 | <UNDEFINED> | <UNDEFINED> | <UNDEFINED> |
| 14 | <UNDEFINED> | <UNDEFINED> | <UNDEFINED> |
| 15 | <UNDEFINED> | <UNDEFINED> | <UNDEFINED> |

| | |
|---|---|
| ASSEMBLY | BASE LEVEL GENERIC SCHEMATIC ONLY, COMMON & NO_STUFF ASSEMBLY NOTES AND BOM NOT FINAL |
| PAGE DETAIL | P681-A01 OVERVIEW |


ALL NVIDIA DESIGN SPECIFICATIONS, REFERENCE SPECIFICATIONS, REFERENCE BOARDS, FILES, DRAWINGS, DIAGNOSTICS, LISTS AND OTHER DOCUMENTS OR INFORMATION (TOGETHER AND SEPARATELY, 'MATERIALS') ARE BEING PROVIDED 'AS IS'. THE MATERIALS MAY CONTAIN KNOWN AND UNKNOWN VIOLATIONS OR DEVIATIONS OF INDUSTRY STANDARDS AND SPECIFICATIONS. NVIDIA MAKES NO WARRANTIES, EXPRESSED, IMPLIED, STATUTORY OR OTHERWISE WITH RESPECT TO THE MATERIALS OR OTHERWISE, AND EXPRESSLY DISCLAIMS ALL IMPLIED WARRANTIES INCLUDING, WITHOUT LIMITATION, THE WARRANTIES OF DESIGN, OF NONINFRINGEMENT, MERCHANTABILITY OR FITNESS FOR A PARTICULAR PURPOSE, OR ARISING FROM A COURSE OF DEALING, TRADE USAGE, TRADE PRACTICE, OR INDUSTRY STANDARDS.



NVIDIA CORPORATION
2701 SAN TOMAS EXPRESSWAY
SANTA CLARA, CA 95050, USA


| | | | |
|---|---|---|---|
| NV_PN | 600-10681-base-100 A | | |
| ID | | PAGE | |
| NAME | | DATE | 05-FEB-2009 |

# PCI-EXPRESS INTERFACE

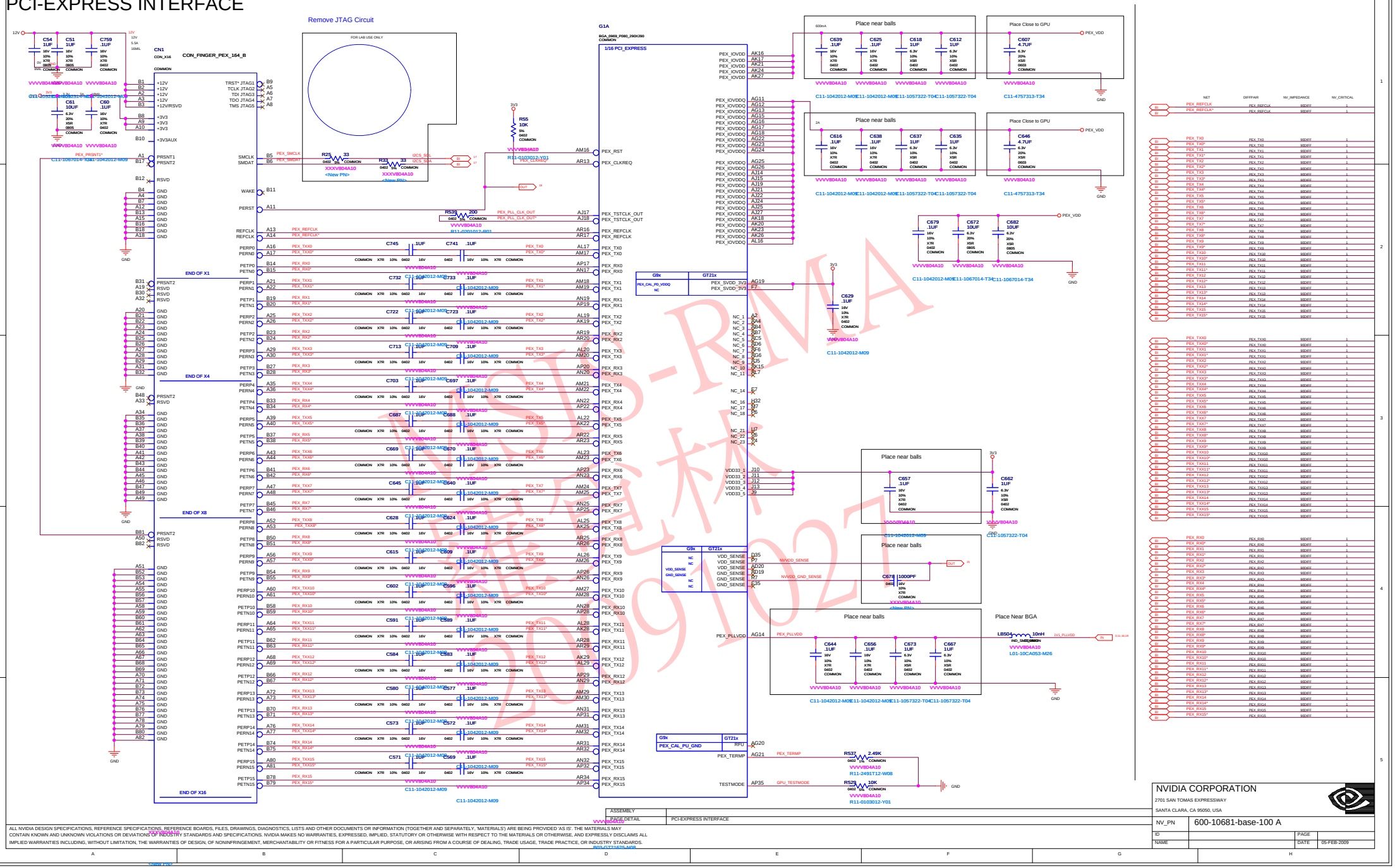


ALL NVIDIA DESIGN SPECIFICATIONS, REFERENCE SPECIFICATIONS, REFERENCE BOARDS, FILES, DRAWINGS, DIAGNOSTICS, LISTS AND OTHER DOCUMENTS OR INFORMATION (TOGETHER AND SEPARATELY, 'MATERIALS') ARE BEING PROVIDED 'AS IS'. THE MATERIALS MAY CONTAIN KNOWN AND UNKNOWN VIOLATIONS OR DEVIATIONS OF INDUSTRY STANDARDS AND SPECIFICATIONS. NVIDIA MAKES NO WARRANTIES, EXPRESSED, IMPLIED, STATUTORY OR OTHERWISE WITH RESPECT TO THE MATERIALS OR OTHERWISE, AND EXPRESSLY DISCLAIMS ALL IMPLIED WARRANTIES INCLUDING, WITHOUT LIMITATION, THE WARRANTIES OF DESIGN, OF NONINFRINGEMENT, MERCHANTABILITY OR FITNESS FOR A PARTICULAR PURPOSE, OR ARISING FROM A COURSE OF DEALING, TRADE USAGE, TRADE PRACTICE, OR INDUSTRY STANDARDS.

# PARTITION A FRAME BUFFER INTERFACE

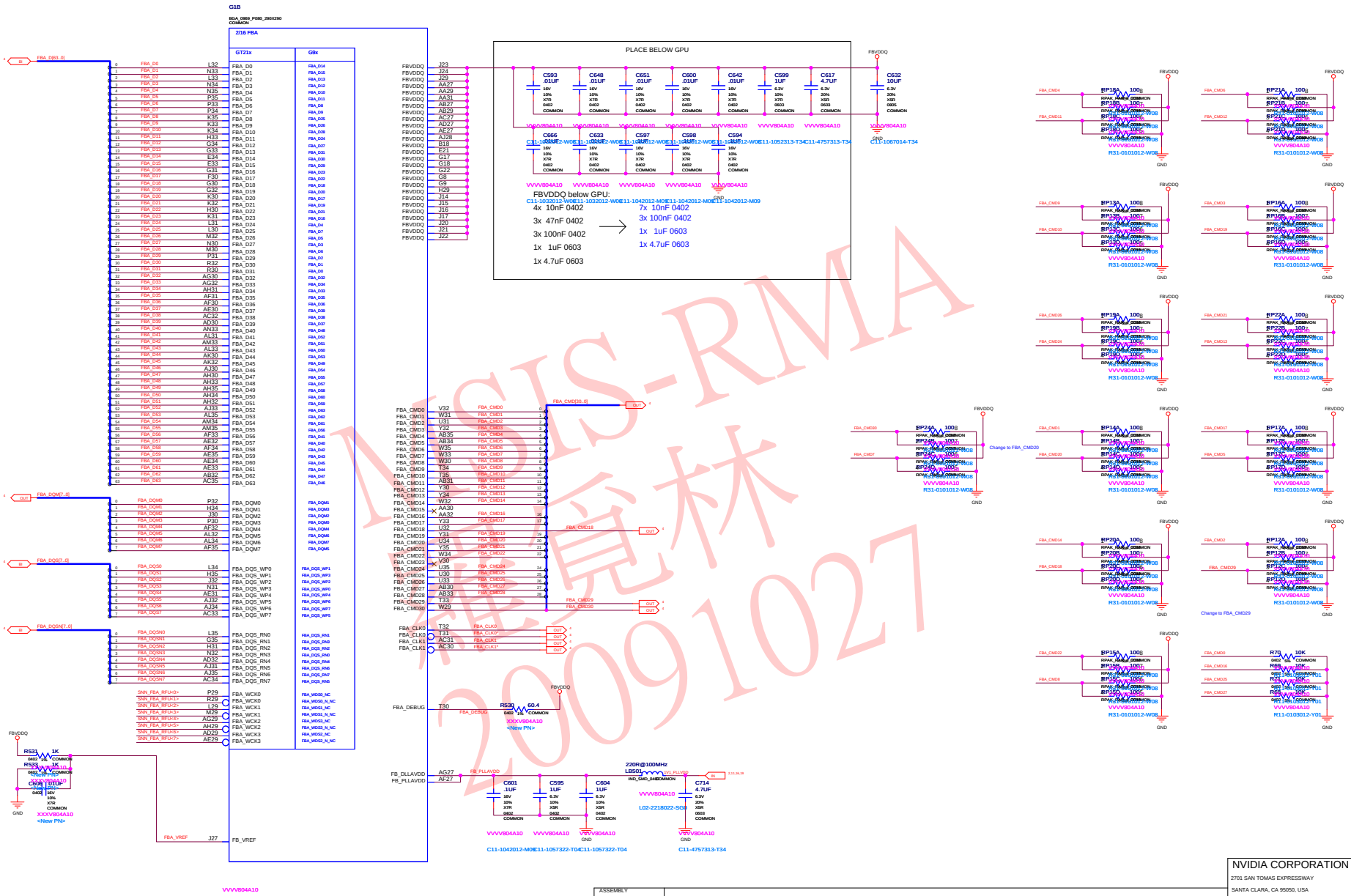


MSIS-RMA 維宏林 20091027

| | |
|---|---|
| ASSEMBLY | |
| PAGE DETAIL | PARTITION A FRAME BUFFER INTERFACE |

ALL NVIDIA DESIGN SPECIFICATIONS, REFERENCE SPECIFICATIONS, REFERENCE BOARDS, FILES, DRAWINGS, DIAGNOSTICS, LISTS AND OTHER DOCUMENTS OR INFORMATION (TOGETHER AND SEPARATELY, 'MATERIALS') ARE BEING PROVIDED 'AS IS'. THE MATERIALS MAY CONTAIN KNOWN AND UNKNOWN VIOLATIONS OR DEVIATIONS OF INDUSTRY STANDARDS AND SPECIFICATIONS. NVIDIA MAKES NO WARRANTIES, EXPRESSED, IMPLIED, STATUTORY OR OTHERWISE WITH RESPECT TO THE MATERIALS OR OTHERWISE, AND EXPRESSLY DISCLAIMS ALL IMPLIED WARRANTIES INCLUDING, WITHOUT LIMITATION, THE WARRANTIES OF DESIGN, OF NONINFRINGEMENT, MERCHANTABILITY OR FITNESS FOR A PARTICULAR PURPOSE, OR ARISING FROM A COURSE OF DEALING, TRADE USAGE, TRADE PRACTICE, OR INDUSTRY STANDARDS.

NVIDIA CORPORATION
2701 SAN TOMAS EXPRESSWAY
SANTA CLARA, CA 95050, USA

| | | | |
|---|---|---|---|
| NV_PN | 600-10681-base-100 A | | |
| ID | | PAGE | |
| NAME | | DATE | 05-FEB-2009 |

# PARTITION A MOMERIES

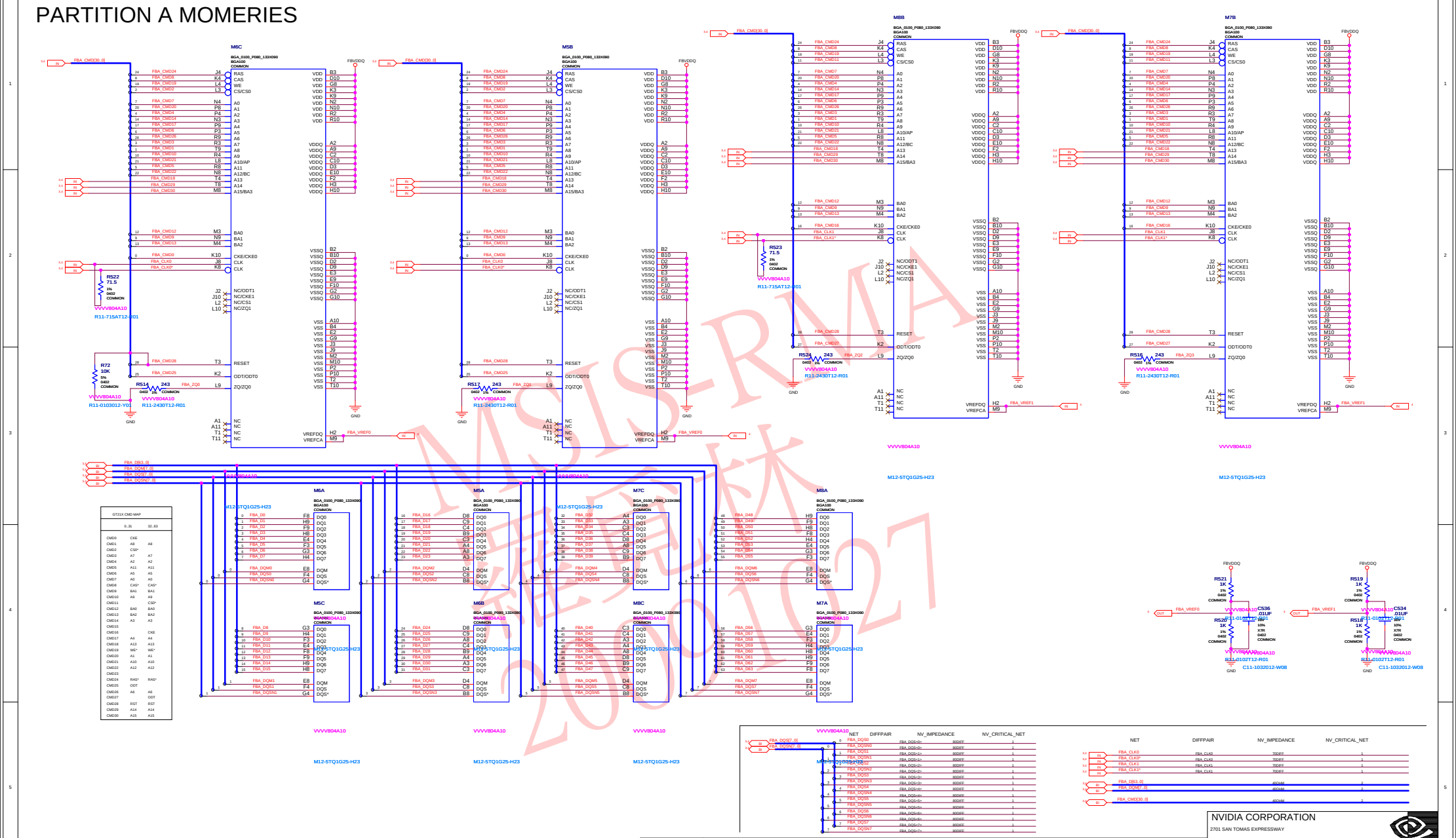


| NET | DIFFPAIR | NV_IMPEDANCE | NV_CRITICAL_NET |
|---|---|---|---|
| FBA_DQS0 | FBA_DQS0+ | 90DIFF | 1 |
| FBA_DQSN0 | FBA_DQS0- | 90DIFF | 1 |
| FBA_DQS1 | FBA_DQS1+ | 90DIFF | 1 |
| FBA_DQSN1 | FBA_DQS1- | 90DIFF | 1 |
| FBA_DQS2 | FBA_DQS2+ | 90DIFF | 1 |
| FBA_DQSN2 | FBA_DQS2- | 90DIFF | 1 |
| FBA_DQS3 | FBA_DQS3+ | 90DIFF | 1 |
| FBA_DQSN3 | FBA_DQS3- | 90DIFF | 1 |
| FBA_DQS4 | FBA_DQS4+ | 90DIFF | 1 |
| FBA_DQSN4 | FBA_DQS4- | 90DIFF | 1 |
| FBA_DQS5 | FBA_DQS5+ | 90DIFF | 1 |
| FBA_DQSN5 | FBA_DQS5- | 90DIFF | 1 |
| FBA_DQS6 | FBA_DQS6+ | 90DIFF | 1 |
| FBA_DQSN6 | FBA_DQS6- | 90DIFF | 1 |
| FBA_DQS7 | FBA_DQS7+ | 90DIFF | 1 |
| FBA_DQSN7 | FBA_DQS7- | 90DIFF | 1 |

| NET | DIFFPAIR | NV_IMPEDANCE | NV_CRITICAL_NET |
|---|---|---|---|
| FBA_CLK0 | FBA_CLK0 | 70DIFF | 1 |
| FBA_CLK0* | FBA_CLK0 | 70DIFF | 1 |
| FBA_CLK1 | FBA_CLK1 | 70DIFF | 1 |
| FBA_CLK1* | FBA_CLK1 | 70DIFF | 1 |
| FBA_DB3_0 | | 40OHM | 2 |
| FBA_DQM7_0 | | 40OHM | 2 |
| FBA_CMD30_0 | | 40OHM | 2 |

| | |
|---|---|
| ASSEMBLY | BASE LEVEL GENERIC SCHEMATIC ONLY, COMMON & NO_STUFF ASSEMBLY NOTES AND BOM NOT FINAL |
| PAGE DETAIL | PARTITION A MEMORIES |

ALL NVIDIA DESIGN SPECIFICATIONS, REFERENCE SPECIFICATIONS, REFERENCE BOARDS, FILES, DRAWINGS, DIAGNOSTICS, LISTS AND OTHER DOCUMENTS OR INFORMATION (TOGETHER AND SEPARATELY, 'MATERIALS') ARE BEING PROVIDED 'AS IS'. THE MATERIALS MAY CONTAIN KNOWN AND UNKNOWN VIOLATIONS OR DEVIATIONS OF INDUSTRY STANDARDS AND SPECIFICATIONS. NVIDIA MAKES NO WARRANTIES, EXPRESSED, IMPLIED, STATUTORY OR OTHERWISE WITH RESPECT TO THE MATERIALS OR OTHERWISE, AND EXPRESSLY DISCLAIMS ALL IMPLIED WARRANTIES INCLUDING, WITHOUT LIMITATION, THE WARRANTIES OF DESIGN, OF NONINFRINGEMENT, MERCHANTABILITY OR FITNESS FOR A PARTICULAR PURPOSE, OR ARISING FROM A COURSE OF DEALING, TRADE USAGE, TRADE PRACTICE, OR INDUSTRY STANDARDS.

NVIDIA CORPORATION
2701 SAN TOMAS EXPRESSWAY
SANTA CLARA, CA 95050, USA

| | | | |
|---|---|---|---|
| NV_PN | 600-10681-base-100 A | | |
| ID | | PAGE | |
| NAME | | DATE | 05-FEB-2009 |

# FBA DECOUPLING CAPS & NVVDD DECOUPLING CAPS

## Decoupling for FBA 0..15

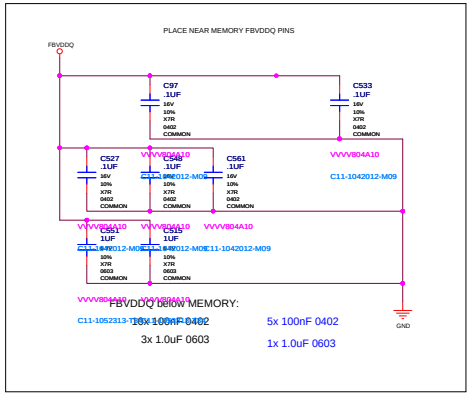


## Decoupling for FBA 16..31

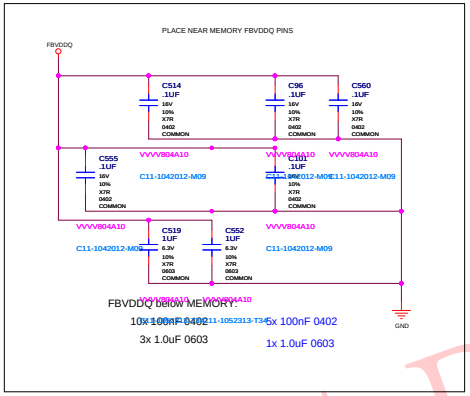


## Decoupling for FBA 32..47

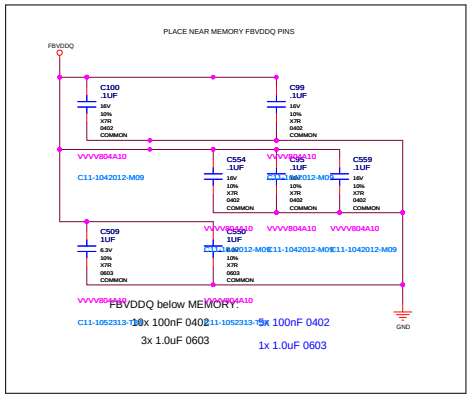


## Decoupling for FBA 48..63

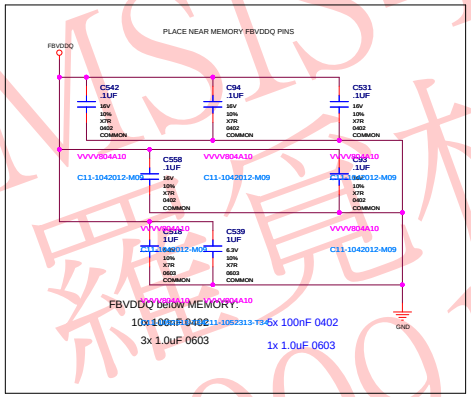


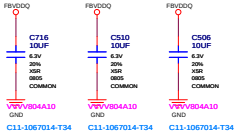


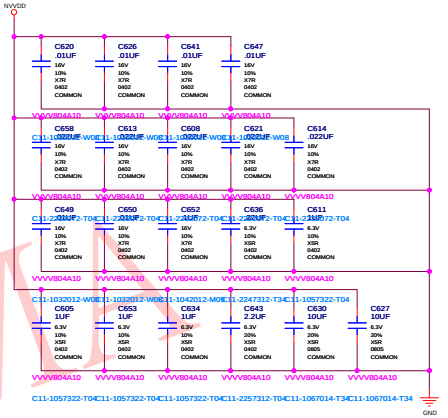


NVVDD under GPU:

| | |
|---|---|
| 4x 0.01uF 0402 X7R | 6x 0.01uF 0402 X7R |
| 5x 0.022uF 0402 X7R | |
| 2x 0.047uF 0402 X7R | 0x 0.047uF 0402 X7R |
| 1x 0.1uF 0402 X7R | |
| 1x 0.22uF 0402 X7R | |
| 4x 1.0uF 0402 X5R | |
| 1x 2.2uF 0402 X5R | |
| 2x 10uF 0805 X5R | |

## Decoupling for EMI

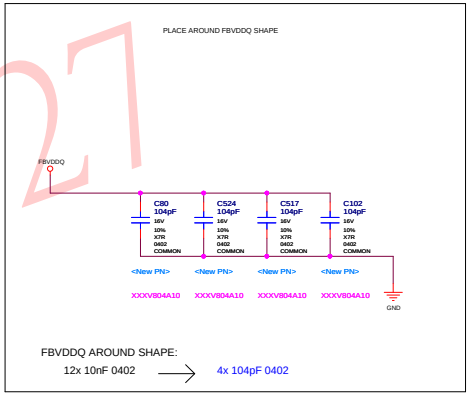


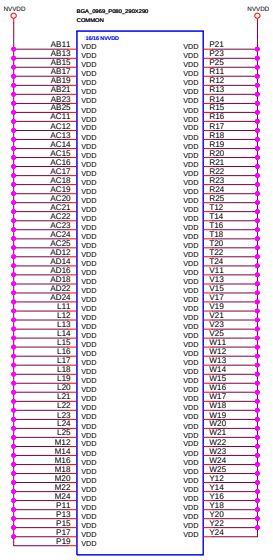



NVIS-RMMA
羅宏林
20091027


| | |
|---|---|
| ASSEMBLY | BASE LEVEL GENERIC SCHEMATIC ONLY, COMMON & NO_STUFF ASSEMBLY NOTES AND BOM NOT FINAL |
| PAGE DETAIL | FBA DECOUPLING CAPS & NVVDD DECOUPLING CAPS |


ALL NVIDIA DESIGN SPECIFICATIONS, REFERENCE SPECIFICATIONS, REFERENCE BOARDS, FILES, DRAWINGS, DIAGNOSTICS, LISTS AND OTHER DOCUMENTS OR INFORMATION (TOGETHER AND SEPARATELY, 'MATERIALS') ARE BEING PROVIDED 'AS IS'. THE MATERIALS MAY CONTAIN KNOWN AND UNKNOWN VIOLATIONS OR DEVIATIONS OF INDUSTRY STANDARDS AND SPECIFICATIONS. NVIDIA MAKES NO WARRANTIES, EXPRESSED, IMPLIED, STATUTORY OR OTHERWISE WITH RESPECT TO THE MATERIALS OR OTHERWISE, AND EXPRESSLY DISCLAIMS ALL IMPLIED WARRANTIES INCLUDING, WITHOUT LIMITATION, THE WARRANTIES OF DESIGN, OF NONINFRINGEMENT, MERCHANTABILITY OR FITNESS FOR A PARTICULAR PURPOSE, OR ARISING FROM A COURSE OF DEALING, TRADE USAGE, TRADE PRACTICE, OR INDUSTRY STANDARDS.



NVIDIA CORPORATION
2701 SAN TOMAS EXPRESSWAY
SANTA CLARA, CA 95050, USA


| | | | |
|---|---|---|---|
| NV_PN | 600-10681-base-100 A | | |
| ID | | PAGE | |
| NAME | | DATE | 05-FEB-2009 |

# PARTITION C FRAME BUFFER INTERFACE

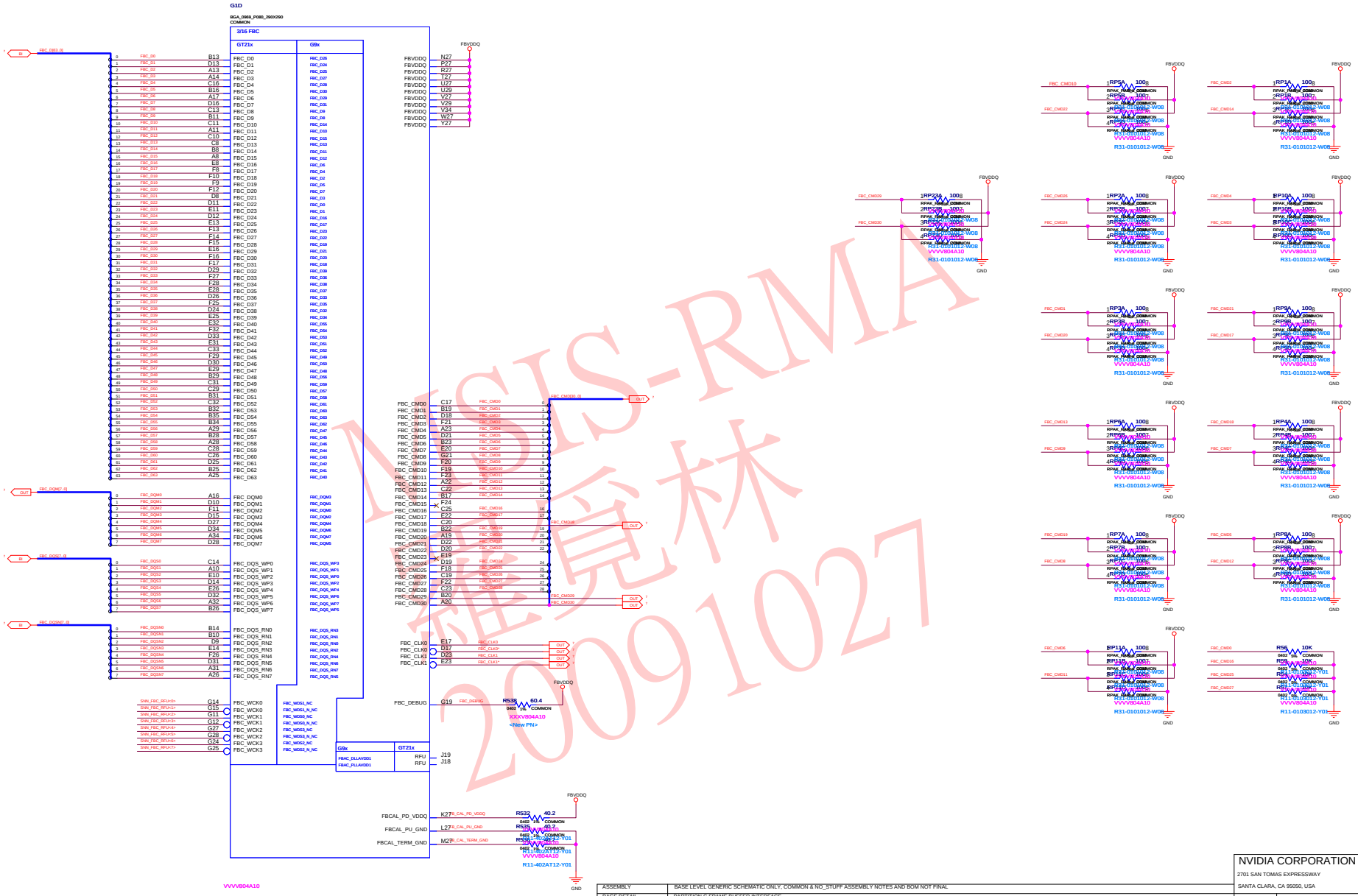


NSIS-RMA 雍宣材 20001027

| | |
|---|---|
| ASSEMBLY | BASE LEVEL GENERIC SCHEMATIC ONLY, COMMON & NO_STUFF ASSEMBLY NOTES AND BOM NOT FINAL |
| PAGE DETAIL | PARTITION C FRAME BUFFER INTERFACE |

ALL NVIDIA DESIGN SPECIFICATIONS, REFERENCE SPECIFICATIONS, REFERENCE BOARDS, FILES, DRAWINGS, DIAGNOSTICS, LISTS AND OTHER DOCUMENTS OR INFORMATION (TOGETHER AND SEPARATELY, 'MATERIALS') ARE BEING PROVIDED 'AS IS'. THE MATERIALS MAY CONTAIN KNOWN AND UNKNOWN VIOLATIONS OR DEVIATIONS OF INDUSTRY STANDARDS AND SPECIFICATIONS. NVIDIA MAKES NO WARRANTIES, EXPRESSED, IMPLIED, STATUTORY OR OTHERWISE WITH RESPECT TO THE MATERIALS OR OTHERWISE, AND EXPRESSLY DISCLAIMS ALL IMPLIED WARRANTIES INCLUDING, WITHOUT LIMITATION, THE WARRANTIES OF DESIGN, OF NONINFRINGEMENT, MERCHANTABILITY OR FITNESS FOR A PARTICULAR PURPOSE, OR ARISING FROM A COURSE OF DEALING, TRADE USAGE, TRADE PRACTICE, OR INDUSTRY STANDARDS.

NVIDIA CORPORATION
2701 SAN TOMAS EXPRESSWAY
SANTA CLARA, CA 95050, USA

| | | | |
|---|---|---|---|
| NV_PN | 600-10681-base-100 A | | |
| ID | | PAGE | |
| NAME | | DATE | 05-FEB-2009 |

# PARTITION C MOMERIES

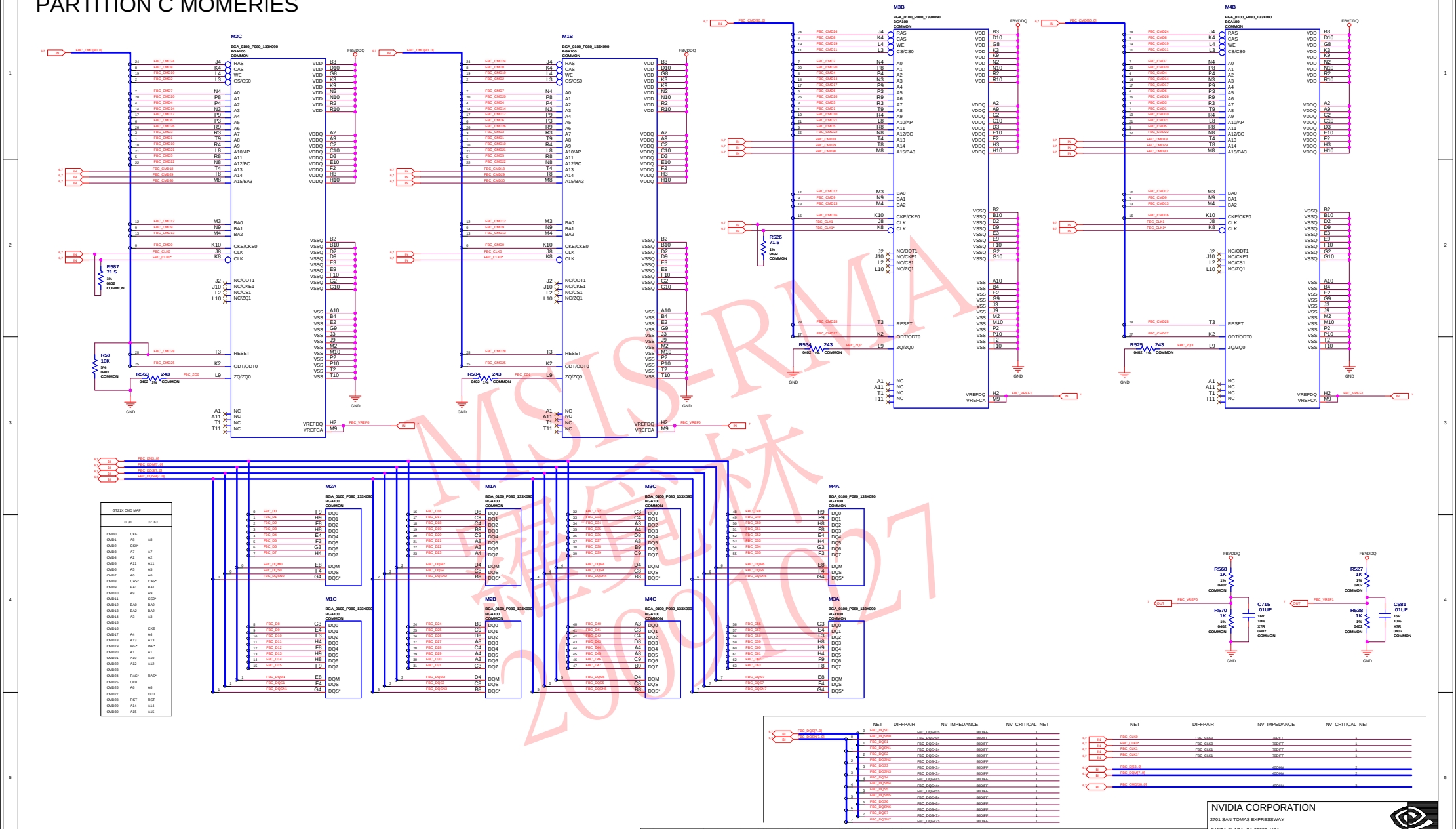


| GT21X CMD MAP | | |
|---|---|---|
| | 0..31 | 32..63 |
| CMD0 | CKE | |
| CMD1 | A8 | A8 |
| CMD2 | CS0* | |
| CMD3 | A7 | A7 |
| CMD4 | A2 | A2 |
| CMD5 | A11 | A11 |
| CMD6 | A5 | A5 |
| CMD7 | A0 | A0 |
| CMD8 | CAS* | CAS* |
| CMD9 | BA1 | BA1 |
| CMD10 | A9 | A9 |
| CMD11 | | CS0* |
| CMD12 | BA0 | BA0 |
| CMD13 | BA2 | BA2 |
| CMD14 | A3 | A3 |
| CMD15 | | |
| CMD16 | | CKE |
| CMD17 | A4 | A4 |
| CMD18 | A13 | A13 |
| CMD19 | WE* | WE* |
| CMD20 | A1 | A1 |
| CMD21 | A10 | A10 |
| CMD22 | A12 | A12 |
| CMD23 | | |
| CMD24 | RAS* | RAS* |
| CMD25 | ODT | |
| CMD26 | A6 | A6 |
| CMD27 | | ODT |
| CMD28 | RST | RST |
| CMD29 | A14 | A14 |
| CMD30 | A15 | A15 |

MSISRMA 程宣林 2009.02.27

| | |
|---|---|
| ASSEMBLY | BASE LEVEL GENERIC SCHEMATIC ONLY, COMMON & NO_STUFF ASSEMBLY NOTES AND BOM NOT FINAL |
| PAGE DETAIL | PARTITION C MEMORIES |

ALL NVIDIA DESIGN SPECIFICATIONS, REFERENCE SPECIFICATIONS, REFERENCE BOARDS, FILES, DRAWINGS, DIAGNOSTICS, LISTS AND OTHER DOCUMENTS OR INFORMATION (TOGETHER AND SEPARATELY, 'MATERIALS') ARE BEING PROVIDED 'AS IS'. THE MATERIALS MAY CONTAIN KNOWN AND UNKNOWN VIOLATIONS OR DEVIATIONS OF INDUSTRY STANDARDS AND SPECIFICATIONS. NVIDIA MAKES NO WARRANTIES, EXPRESSED, IMPLIED, STATUTORY OR OTHERWISE WITH RESPECT TO THE MATERIALS OR OTHERWISE, AND EXPRESSLY DISCLAIMS ALL IMPLIED WARRANTIES INCLUDING, WITHOUT LIMITATION, THE WARRANTIES OF DESIGN, OF NONINFRINGEMENT, MERCHANTABILITY OR FITNESS FOR A PARTICULAR PURPOSE, OR ARISING FROM A COURSE OF DEALING, TRADE USAGE, TRADE PRACTICE, OR INDUSTRY STANDARDS.

NVIDIA CORPORATION
2701 SAN TOMAS EXPRESSWAY
SANTA CLARA, CA 95050, USA

| | | | |
|---|---|---|---|
| NV_PN | 600-10681-base-100 A | | |
| ID | | PAGE | |
| NAME | | DATE | 05-FEB-2009 |

# FBC DECOUPLING CAPS & NVVDD DECOUPLING CAPS

## Decoupling for FBC 0..15

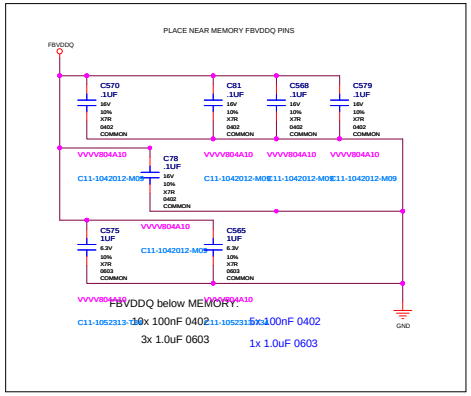


## Decoupling for FBC 16..31

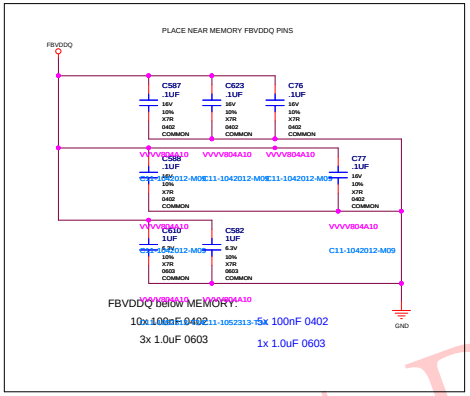


## Decoupling for FBC 32..47

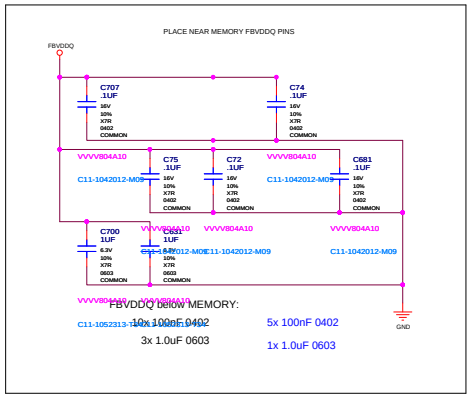


## Decoupling for FBC 48..63

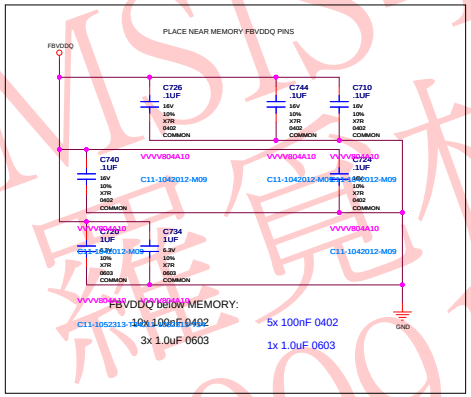


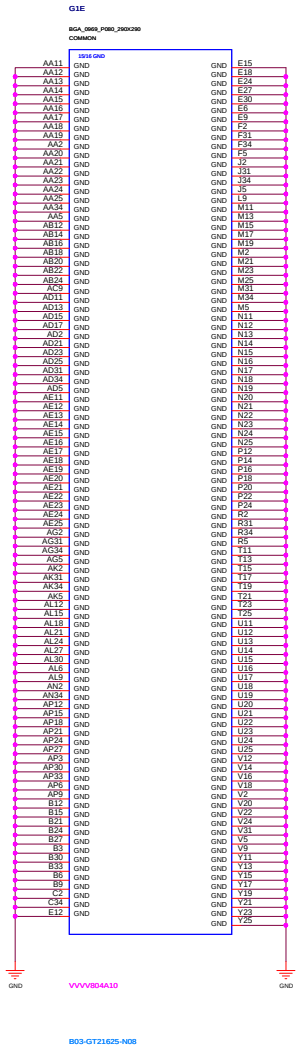


MSIS-RMA
羅覓林
20091027

| | |
|---|---|
| ASSEMBLY | BASE LEVEL GENERIC SCHEMATIC ONLY, COMMON & NO_STUFF ASSEMBLY NOTES AND BOM NOT FINAL |
| PAGE DETAIL | FBC DECOUPLING CAPS |

ALL NVIDIA DESIGN SPECIFICATIONS, REFERENCE SPECIFICATIONS, REFERENCE BOARDS, FILES, DRAWINGS, DIAGNOSTICS, LISTS AND OTHER DOCUMENTS OR INFORMATION (TOGETHER AND SEPARATELY, 'MATERIALS') ARE BEING PROVIDED 'AS IS'. THE MATERIALS MAY CONTAIN KNOWN AND UNKNOWN VIOLATIONS OR DEVIATIONS OF INDUSTRY STANDARDS AND SPECIFICATIONS. NVIDIA MAKES NO WARRANTIES, EXPRESSED, IMPLIED, STATUTORY OR OTHERWISE WITH RESPECT TO THE MATERIALS OR OTHERWISE, AND EXPRESSLY DISCLAIMS ALL IMPLIED WARRANTIES INCLUDING, WITHOUT LIMITATION, THE WARRANTIES OF DESIGN, OF NONINFRINGEMENT, MERCHANTABILITY OR FITNESS FOR A PARTICULAR PURPOSE, OR ARISING FROM A COURSE OF DEALING, TRADE USAGE, TRADE PRACTICE, OR INDUSTRY STANDARDS.

NVIDIA CORPORATION
2701 SAN TOMAS EXPRESSWAY
SANTA CLARA, CA 95050, USA

| | | | |
|---|---|---|---|
| NV_PN | 600-10681-base-100 A | | |
| ID | | PAGE | |
| NAME | | DATE | 05-FEB-2009 |

# DACA (SOUTH DVI-I)

Remove EMI filter,protection diode,C780,C775,C779

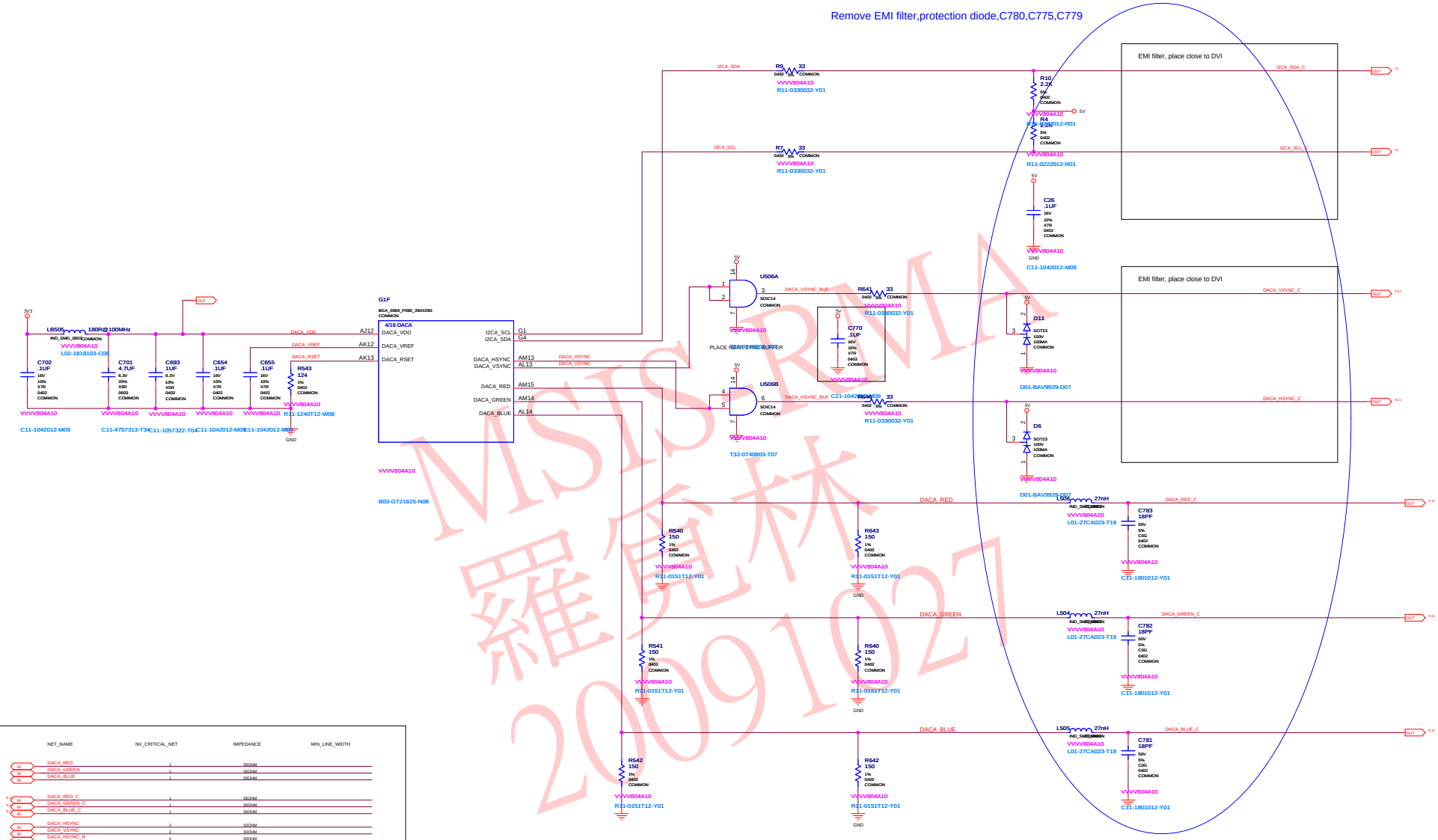


MSI-RMA 羅貫林 20091027

| NET_NAME | NV_CRITICAL_NET | IMPEDANCE | MIN_LINE_WIDTH |
|---|---|---|---|
| DACA_RED | 1 | 50OHM | |
| DACA_GREEN | 1 | 50OHM | |
| DACA_BLUE | 1 | 50OHM | |
| DACA_RED_C | 1 | 50OHM | |
| DACA_GREEN_C | 1 | 50OHM | |
| DACA_BLUE_C | 1 | 50OHM | |
| DACA_HSYNC | 2 | 50OHM | |
| DACA_VSYNC | 2 | 50OHM | |
| DACA_HSYNC_R | 2 | 50OHM | |
| DACA_VSYNC_R | 2 | 50OHM | |
| DACA_VSYNC_BUF | 2 | 50OHM | |
| DACA_HSYNC_BUF | 2 | 50OHM | |
| DACA_VSYNC_C | 2 | 50OHM | |
| DACA_HSYNC_C | 2 | 50OHM | |

| | |
|---|---|
| ASSEMBLY | BASE LEVEL GENERIC SCHEMATIC ONLY, COMMON & NO_STUFF ASSEMBLY NOTES AND BOM NOT FINAL |
| PAGE DETAIL | DACA (SOUTH DVI-I) |

ALL NVIDIA DESIGN SPECIFICATIONS, REFERENCE SPECIFICATIONS, REFERENCE BOARDS, FILES, DRAWINGS, DIAGNOSTICS, LISTS AND OTHER DOCUMENTS OR INFORMATION (TOGETHER AND SEPARATELY, 'MATERIALS') ARE BEING PROVIDED 'AS IS'. THE MATERIALS MAY CONTAIN KNOWN AND UNKNOWN VIOLATIONS OR DEVIATIONS OF INDUSTRY STANDARDS AND SPECIFICATIONS. NVIDIA MAKES NO WARRANTIES, EXPRESSED, IMPLIED, STATUTORY OR OTHERWISE WITH RESPECT TO THE MATERIALS OR OTHERWISE, AND EXPRESSLY DISCLAIMS ALL IMPLIED WARRANTIES INCLUDING, WITHOUT LIMITATION, THE WARRANTIES OF DESIGN, OF NONINFRINGEMENT, MERCHANTABILITY OR FITNESS FOR A PARTICULAR PURPOSE, OR ARISING FROM A COURSE OF DEALING, TRADE USAGE, TRADE PRACTICE, OR INDUSTRY STANDARDS.

NVIDIA CORPORATION
2701 SAN TOMAS EXPRESSWAY
SANTA CLARA, CA 95050, USA

| | |
|---|---|
| NV_PN | 600-10681-base-100 A |
| ID | |
| NAME | |
| PAGE | |
| DATE | 05-FEB-2009 |

# DACB (MID VGA)

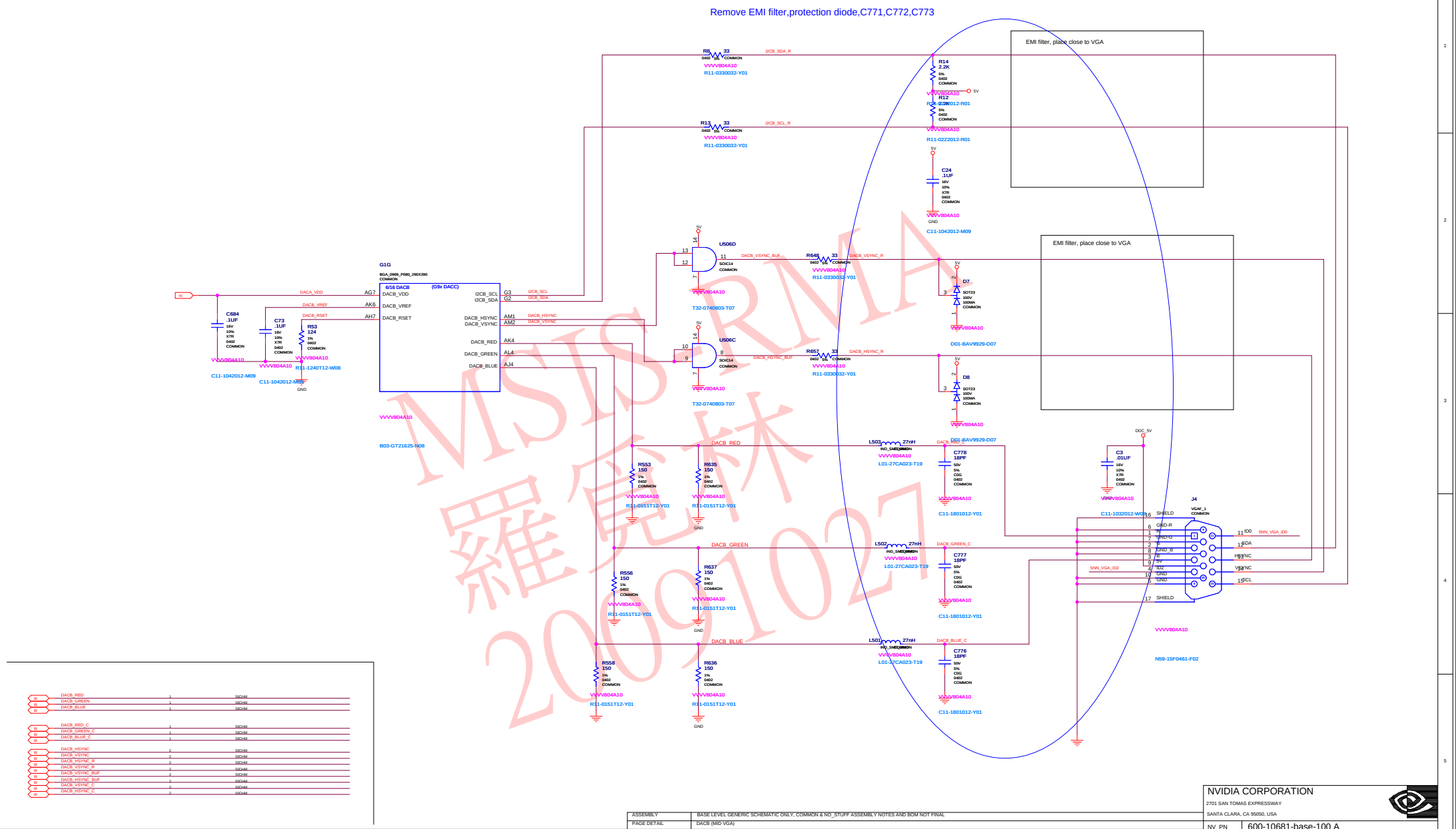


MSIS-RMA
羅竟林
20091027

| | |
|---|---|
| ASSEMBLY | BASE LEVEL GENERIC SCHEMATIC ONLY, COMMON & NO_STUFF ASSEMBLY NOTES AND BOM NOT FINAL |
| PAGE DETAIL | DACB (MID VGA) |

ALL NVIDIA DESIGN SPECIFICATIONS, REFERENCE SPECIFICATIONS, REFERENCE BOARDS, FILES, DRAWINGS, DIAGNOSTICS, LISTS AND OTHER DOCUMENTS OR INFORMATION (TOGETHER AND SEPARATELY, 'MATERIALS') ARE BEING PROVIDED 'AS IS'. THE MATERIALS MAY CONTAIN KNOWN AND UNKNOWN VIOLATIONS OR DEVIATIONS OF INDUSTRY STANDARDS AND SPECIFICATIONS. NVIDIA MAKES NO WARRANTIES, EXPRESSED, IMPLIED, STATUTORY OR OTHERWISE WITH RESPECT TO THE MATERIALS OR OTHERWISE, AND EXPRESSLY DISCLAIMS ALL IMPLIED WARRANTIES INCLUDING, WITHOUT LIMITATION, THE WARRANTIES OF DESIGN, OF NONINFRINGEMENT, MERCHANTABILITY OR FITNESS FOR A PARTICULAR PURPOSE, OR ARISING FROM A COURSE OF DEALING, TRADE USAGE, TRADE PRACTICE, OR INDUSTRY STANDARDS.

NVIDIA CORPORATION
2701 SAN TOMAS EXPRESSWAY
SANTA CLARA, CA 95050, USA

| | | | |
|---|---|---|---|
| NV_PN | 600-10681-base-100 A | | |
| ID | | PAGE | |
| NAME | | DATE | 05-FEB-2009 |

# IFP AB (SOUTH DVI-I)

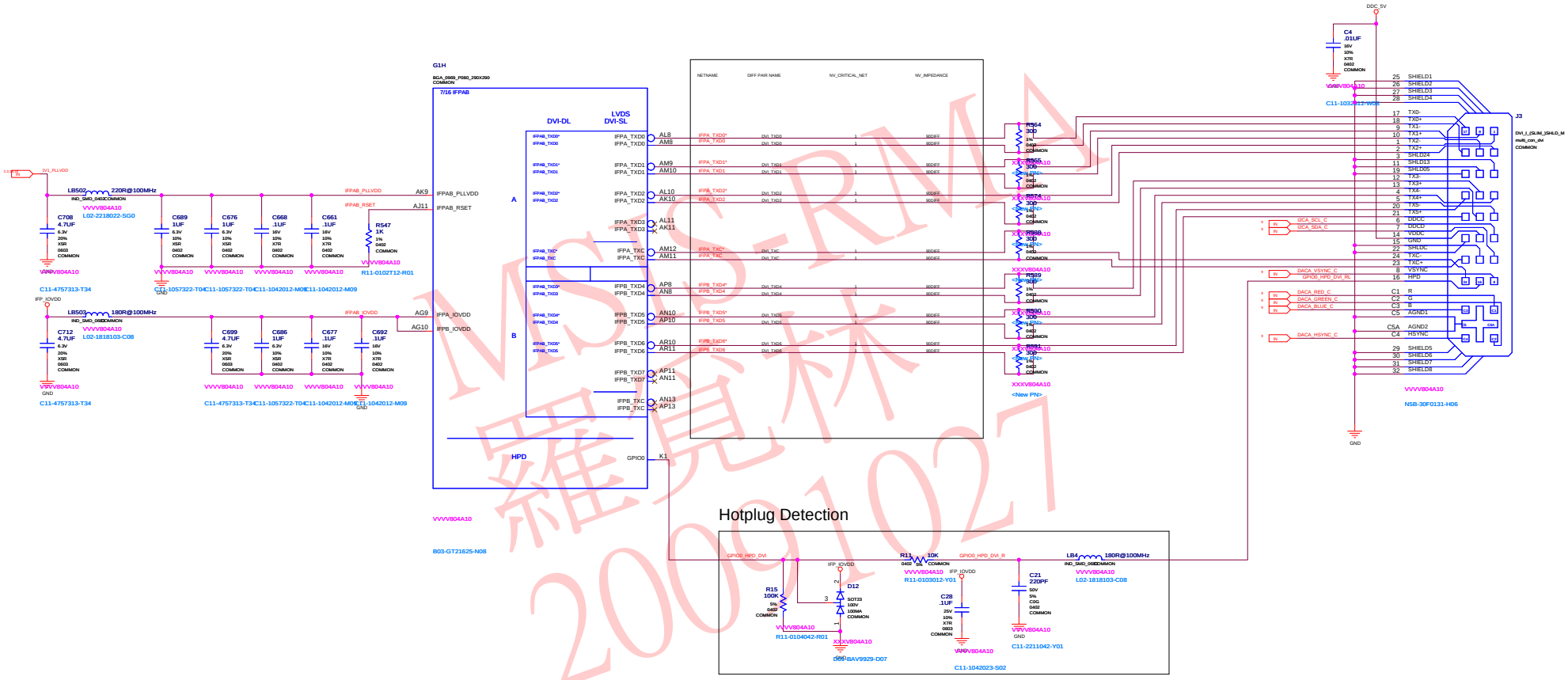


MSIS-RMA 羅覓林 20091027

| | |
|---|---|
| ASSEMBLY | BASE LEVEL GENERIC SCHEMATIC ONLY, COMMON & NO_STUFF ASSEMBLY NOTES AND BOM NOT FINAL |
| PAGE DETAIL | IFP AB (SOUTH DVI-I) |

ALL NVIDIA DESIGN SPECIFICATIONS, REFERENCE SPECIFICATIONS, REFERENCE BOARDS, FILES, DRAWINGS, DIAGNOSTICS, LISTS AND OTHER DOCUMENTS OR INFORMATION (TOGETHER AND SEPARATELY, 'MATERIALS') ARE BEING PROVIDED 'AS IS'. THE MATERIALS MAY CONTAIN KNOWN AND UNKNOWN VIOLATIONS OR DEVIATIONS OF INDUSTRY STANDARDS AND SPECIFICATIONS. NVIDIA MAKES NO WARRANTIES, EXPRESSED, IMPLIED, STATUTORY OR OTHERWISE WITH RESPECT TO THE MATERIALS OR OTHERWISE, AND EXPRESSLY DISCLAIMS ALL IMPLIED WARRANTIES INCLUDING, WITHOUT LIMITATION, THE WARRANTIES OF DESIGN, OF NONINFRINGEMENT, MERCHANTABILITY OR FITNESS FOR A PARTICULAR PURPOSE, OR ARISING FROM A COURSE OF DEALING, TRADE USAGE, TRADE PRACTICE, OR INDUSTRY STANDARDS.

NVIDIA CORPORATION
2701 SAN TOMAS EXPRESSWAY
SANTA CLARA, CA 95050, USA

| | | | |
|---|---|---|---|
| NV_PN | 600-10681-base-100 A | | |
| ID | | PAGE | |
| NAME | | DATE | 05-FEB-2009 |

# IFP C (NORTH HDMI)

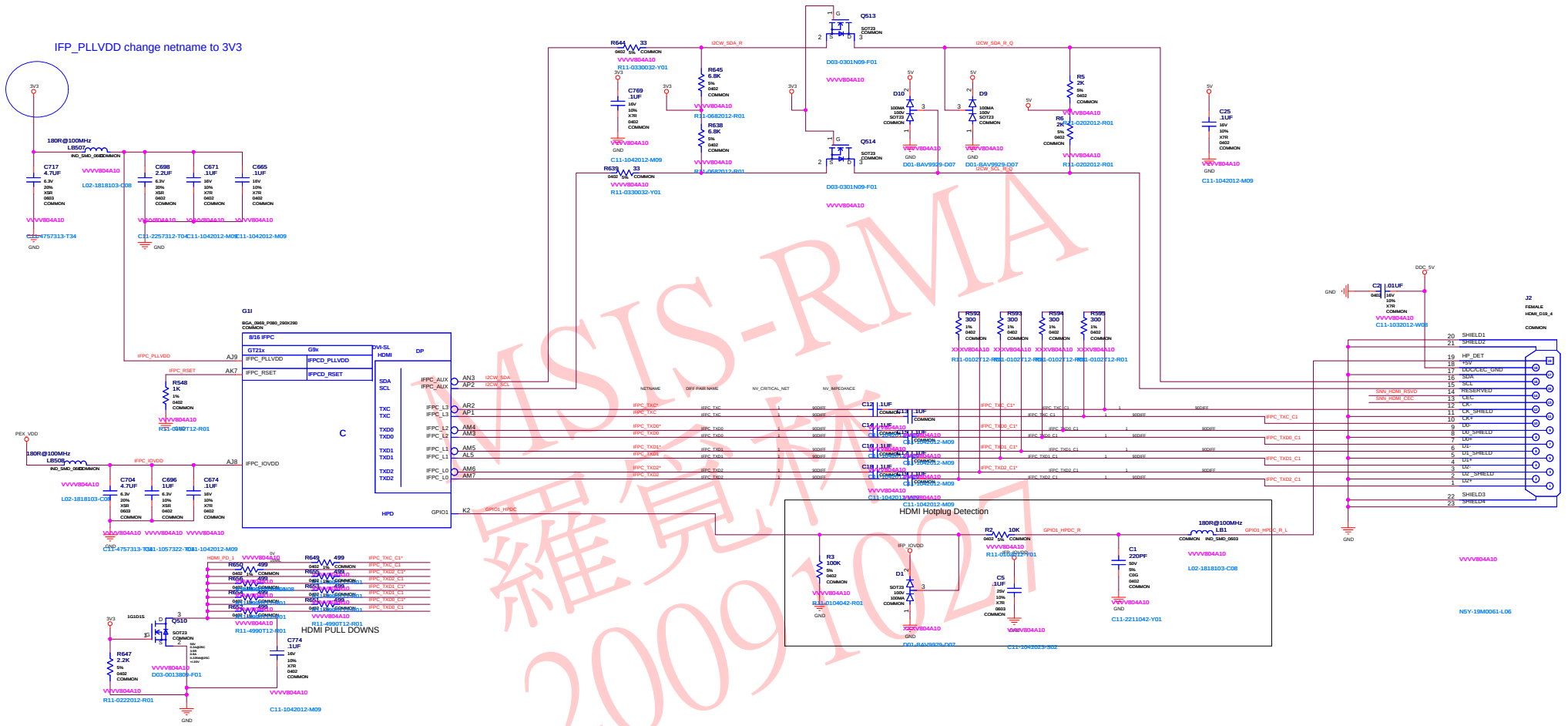


MSIS-RMA 羅冠林 20091027

| | |
|---|---|
| ASSEMBLY | BASE LEVEL GENERIC SCHEMATIC ONLY, COMMON & NO_STUFF ASSEMBLY NOTES AND BOM NOT FINAL |
| PAGE DETAIL | IFP C (NORTH HDMI) |

ALL NVIDIA DESIGN SPECIFICATIONS, REFERENCE SPECIFICATIONS, REFERENCE BOARDS, FILES, DRAWINGS, DIAGNOSTICS, LISTS AND OTHER DOCUMENTS OR INFORMATION (TOGETHER AND SEPARATELY, 'MATERIALS') ARE BEING PROVIDED 'AS IS'. THE MATERIALS MAY CONTAIN KNOWN AND UNKNOWN VIOLATIONS OR DEVIATIONS OF INDUSTRY STANDARDS AND SPECIFICATIONS. NVIDIA MAKES NO WARRANTIES, EXPRESSED, IMPLIED, STATUTORY OR OTHERWISE WITH RESPECT TO THE MATERIALS OR OTHERWISE, AND EXPRESSLY DISCLAIMS ALL IMPLIED WARRANTIES INCLUDING, WITHOUT LIMITATION, THE WARRANTIES OF DESIGN, OF NONINFRINGEMENT, MERCHANTABILITY OR FITNESS FOR A PARTICULAR PURPOSE, OR ARISING FROM A COURSE OF DEALING, TRADE USAGE, TRADE PRACTICE, OR INDUSTRY STANDARDS.

NVIDIA CORPORATION
2701 SAN TOMAS EXPRESSWAY
SANTA CLARA, CA 95050, USA

| | | | |
|---|---|---|---|
| NV_PN | 600-10681-base-100 A | | |
| ID | | PAGE | |
| NAME | | DATE | 05-FEB-2009 |

# IFP D (UNUSED)

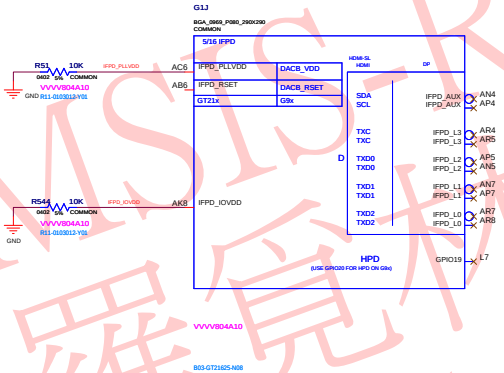


MSI S-RMA
羅覓林
20091027

| | |
|---|---|
| ASSEMBLY | BASE LEVEL GENERIC SCHEMATIC ONLY, COMMON & NO_STUFF ASSEMBLY NOTES AND BOM NOT FINAL |
| PAGE DETAIL | IFP D (UNUSED) |

ALL NVIDIA DESIGN SPECIFICATIONS, REFERENCE SPECIFICATIONS, REFERENCE BOARDS, FILES, DRAWINGS, DIAGNOSTICS, LISTS AND OTHER DOCUMENTS OR INFORMATION (TOGETHER AND SEPARATELY, 'MATERIALS') ARE BEING PROVIDED 'AS IS'. THE MATERIALS MAY CONTAIN KNOWN AND UNKNOWN VIOLATIONS OR DEVIATIONS OF INDUSTRY STANDARDS AND SPECIFICATIONS. NVIDIA MAKES NO WARRANTIES, EXPRESSED, IMPLIED, STATUTORY OR OTHERWISE WITH RESPECT TO THE MATERIALS OR OTHERWISE, AND EXPRESSLY DISCLAIMS ALL IMPLIED WARRANTIES INCLUDING, WITHOUT LIMITATION, THE WARRANTIES OF DESIGN, OF NONINFRINGEMENT, MERCHANTABILITY OR FITNESS FOR A PARTICULAR PURPOSE, OR ARISING FROM A COURSE OF DEALING, TRADE USAGE, TRADE PRACTICE, OR INDUSTRY STANDARDS.

NVIDIA CORPORATION
2701 SAN TOMAS EXPRESSWAY
SANTA CLARA, CA 95050, USA

| | | | |
|---|---|---|---|
| NV_PN | 600-10681-base-100 A | | |
| ID | | PAGE | |
| NAME | | DATE | 05-FEB-2009 |

# IFP EF (UNUSED)

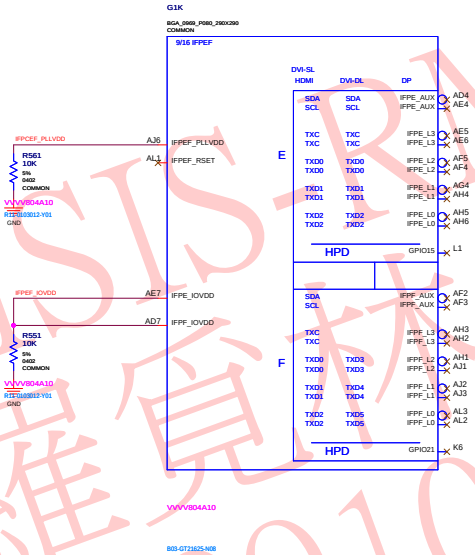


MSI RMA
羅宜祥
20091027

| | |
|---|---|
| ASSEMBLY | BASE LEVEL GENERIC SCHEMATIC ONLY, COMMON & NO_STUFF ASSEMBLY NOTES AND BOM NOT FINAL |
| PAGE DETAIL | IFP EF (UNUSED) |

ALL NVIDIA DESIGN SPECIFICATIONS, REFERENCE SPECIFICATIONS, REFERENCE BOARDS, FILES, DRAWINGS, DIAGNOSTICS, LISTS AND OTHER DOCUMENTS OR INFORMATION (TOGETHER AND SEPARATELY, 'MATERIALS') ARE BEING PROVIDED 'AS IS'. THE MATERIALS MAY CONTAIN KNOWN AND UNKNOWN VIOLATIONS OR DEVIATIONS OF INDUSTRY STANDARDS AND SPECIFICATIONS. NVIDIA MAKES NO WARRANTIES, EXPRESSED, IMPLIED, STATUTORY OR OTHERWISE WITH RESPECT TO THE MATERIALS OR OTHERWISE, AND EXPRESSLY DISCLAIMS ALL IMPLIED WARRANTIES INCLUDING, WITHOUT LIMITATION, THE WARRANTIES OF DESIGN, OF NONINFRINGEMENT, MERCHANTABILITY OR FITNESS FOR A PARTICULAR PURPOSE, OR ARISING FROM A COURSE OF DEALING, TRADE USAGE, TRADE PRACTICE, OR INDUSTRY STANDARDS.

NVIDIA CORPORATION
2701 SAN TOMAS EXPRESSWAY
SANTA CLARA, CA 95050, USA

| | | | |
|---|---|---|---|
| NV_PN | 600-10681-base-100 A | | |
| ID | | PAGE | |
| NAME | | DATE | 05-FEB-2009 |

# MIOA & MIOB

Remove R545,C664,R554 of MIOA

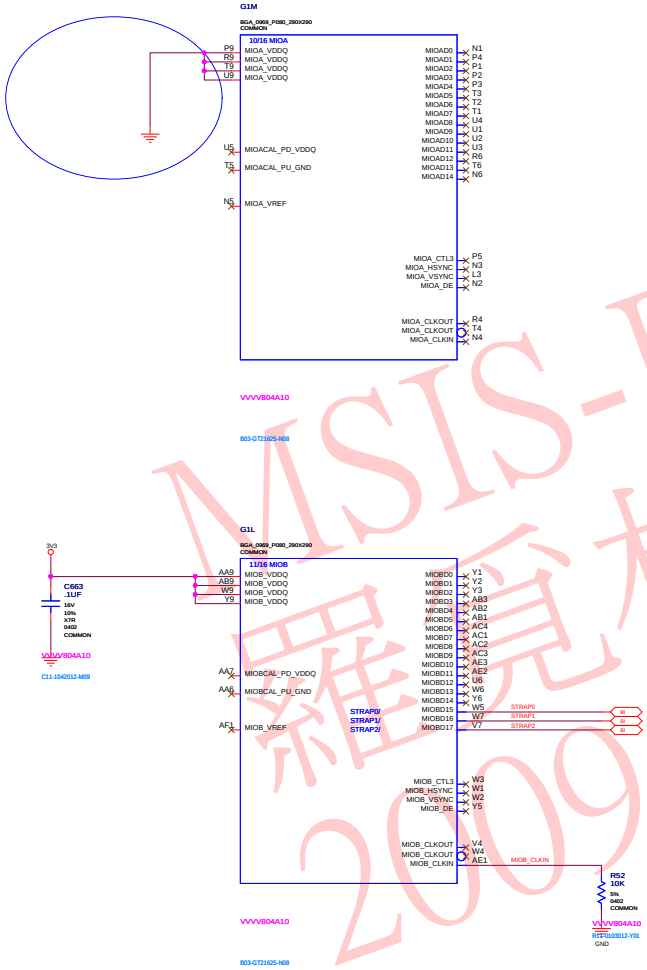


MSIS-RMA
羅覓林
20091027

| | |
|---|---|
| ASSEMBLY | BASE LEVEL GENERIC SCHEMATIC ONLY, COMMON & NO_STUFF ASSEMBLY NOTES AND BOM NOT FINAL |
| PAGE DETAIL | MIOA & MIOB |

ALL NVIDIA DESIGN SPECIFICATIONS, REFERENCE SPECIFICATIONS, REFERENCE BOARDS, FILES, DRAWINGS, DIAGNOSTICS, LISTS AND OTHER DOCUMENTS OR INFORMATION (TOGETHER AND SEPARATELY, 'MATERIALS') ARE BEING PROVIDED 'AS IS'. THE MATERIALS MAY CONTAIN KNOWN AND UNKNOWN VIOLATIONS OR DEVIATIONS OF INDUSTRY STANDARDS AND SPECIFICATIONS. NVIDIA MAKES NO WARRANTIES, EXPRESSED, IMPLIED, STATUTORY OR OTHERWISE WITH RESPECT TO THE MATERIALS OR OTHERWISE, AND EXPRESSLY DISCLAIMS ALL IMPLIED WARRANTIES INCLUDING, WITHOUT LIMITATION, THE WARRANTIES OF DESIGN, OF NONINFRINGEMENT, MERCHANTABILITY OR FITNESS FOR A PARTICULAR PURPOSE, OR ARISING FROM A COURSE OF DEALING, TRADE USAGE, TRADE PRACTICE, OR INDUSTRY STANDARDS.

NVIDIA CORPORATION
2701 SAN TOMAS EXPRESSWAY
SANTA CLARA, CA 95050, USA

| | | | |
|---|---|---|---|
| NV_PN | 600-10681-base-100 A | | |
| ID | | PAGE | |
| NAME | | DATE | 05-FEB-2009 |

# EXTERNAL THERMAL SENSOR, FAN CONTROL, GPIO, JTAG

## THERMAL SENSOR

I2C: 0x4CH

R45 1K 0402 5% COMMON
VVVV804A10
R11-0102032-R01

## OVERTEMP LATCH

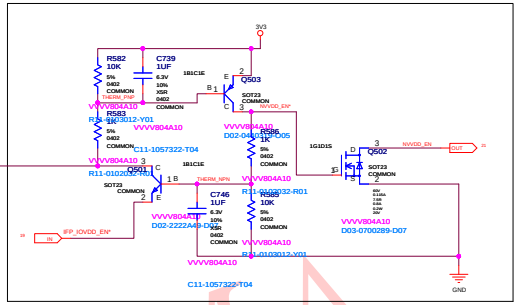


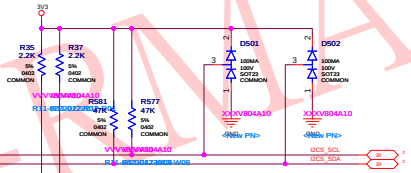


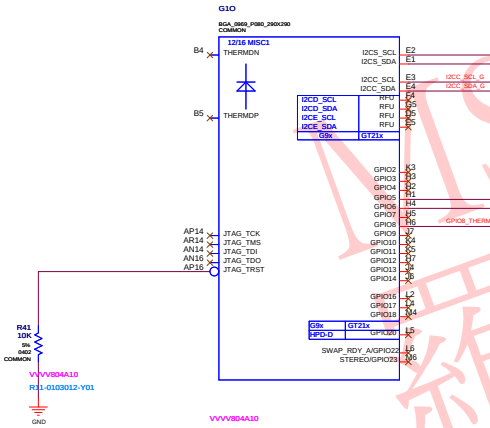


Remove JTAG Circuit

Remove FAN PWM Circuit

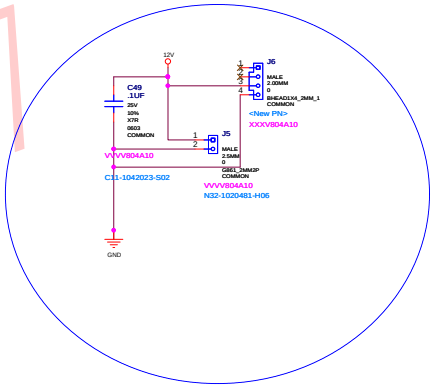


MSIS-MA 羅覓林 20091027

| | |
|---|---|
| ASSEMBLY | BASE LEVEL GENERIC SCHEMATIC ONLY, COMMON & NO_STUFF ASSEMBLY NOTES AND BOM NOT FINAL |
| PAGE DETAIL | EXTERNAL THERMAL SENSOR, FAN CONTROL, GPIO, JTAG |

ALL NVIDIA DESIGN SPECIFICATIONS, REFERENCE SPECIFICATIONS, REFERENCE BOARDS, FILES, DRAWINGS, DIAGNOSTICS, LISTS AND OTHER DOCUMENTS OR INFORMATION (TOGETHER AND SEPARATELY, 'MATERIALS') ARE BEING PROVIDED 'AS IS'. THE MATERIALS MAY CONTAIN KNOWN AND UNKNOWN VIOLATIONS OR DEVIATIONS OF INDUSTRY STANDARDS AND SPECIFICATIONS. NVIDIA MAKES NO WARRANTIES, EXPRESSED, IMPLIED, STATUTORY OR OTHERWISE WITH RESPECT TO THE MATERIALS OR OTHERWISE, AND EXPRESSLY DISCLAIMS ALL IMPLIED WARRANTIES INCLUDING, WITHOUT LIMITATION, THE WARRANTIES OF DESIGN, OF NONINFRINGEMENT, MERCHANTABILITY OR FITNESS FOR A PARTICULAR PURPOSE, OR ARISING FROM A COURSE OF DEALING, TRADE USAGE, TRADE PRACTICE, OR INDUSTRY STANDARDS.

NVIDIA CORPORATION
2701 SAN TOMAS EXPRESSWAY
SANTA CLARA, CA 95050, USA

| | | | |
|---|---|---|---|
| NV_PN | 600-10681-base-100 A | | |
| ID | | PAGE | |
| NAME | | DATE | 05-FEB-2009 |

# BIOS ROM, HDCP ROM, STRAPPING OPTIONS

## STRAPPING OPTIONS

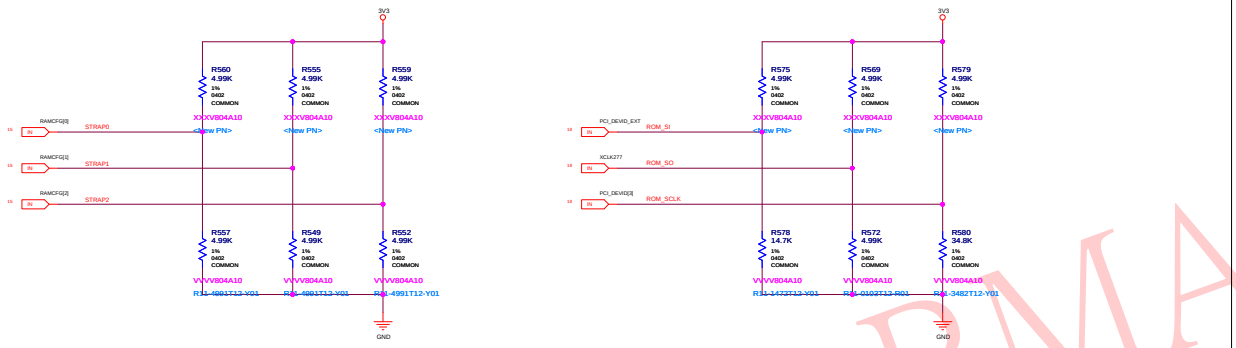


| | | | |
|---|---|---|---|
| Strap0 | USER[3:0] | EDID: 1111 | 45k PU |
| Strap1 | 3GIO_PADCFG[2:0] | DESKTOP: 0000 | 5k PD |
| Strap2 | PCI_DEVID[3:0] | GT216-200: 0A21 0001 | 10k PD |
| | | 0001 128bit 64Mx16 DDR3 Qimonda<br>0010 128bit 64Mx16 DDR3 Hynix<br>0011 128bit 64Mx16 DDR3 Samsung | 1001 64bit 64Mx16 DDR3 Qimonda<br>1010 64bit 64Mx16 DDR3 Hynix<br>1011 64bit 64Mx16 DDR3 Samsung |
| ROM_SI | RAMCFG[3:0] | 0101 128bit 128Mx16 DDR3 Qimonda<br>0110 128bit 128Mx16 DDR3 Hynix<br>0111 128bit 128Mx16 DDR3 Samsung | 1101 64bit 128Mx16 DDR3 Qimonda<br>1110 64bit 128Mx16 DDR3 Hynix<br>1111 64bit 128Mx16 DDR3 Samsung |
| ROM_SCLK | 3: PCI_DEVID_EXT<br>2: SUB_VENDOR (1 = BIOS rom present)<br>1: SLOT_CLK_CFG (1 = common clk MCH/CPU)<br>0: PEX_PLL_EN_TERM (0 = disable pll term) | 0110 | 35k PD |
| ROM_SO | 3: XLK_417 (0 = POR 277MHz)<br>2: FB_0_BAR_SIZE (0 = POR 256MB)<br>1: SMB_ALT_ADDR (0=POR, 1= multiGPU)<br>0: VGA_DEVICE (0=3D device, 1=POR VGA device) | 0001 | 5k PD |

| | | | | | | | |
|---|---|---|---|---|---|---|---|
| 0 | PD | 5k | 8 | PU | 5k | | |
| 1 | PD | 10k | 9 | PU | 10k | | |
| 2 | PD | 15k | 10 | PU | 15k | | |
| 3 | PD | 20k | 11 | PU | 20k | | |
| 4 | PD | 25k | 12 | PU | 25k | | |
| 5 | PD | 30k | 13 | PU | 30k | | |
| 6 | PD | 35k | 14 | PU | 35k | | |
| 7 | PD | 45k | 15 | PU | 45k | | |

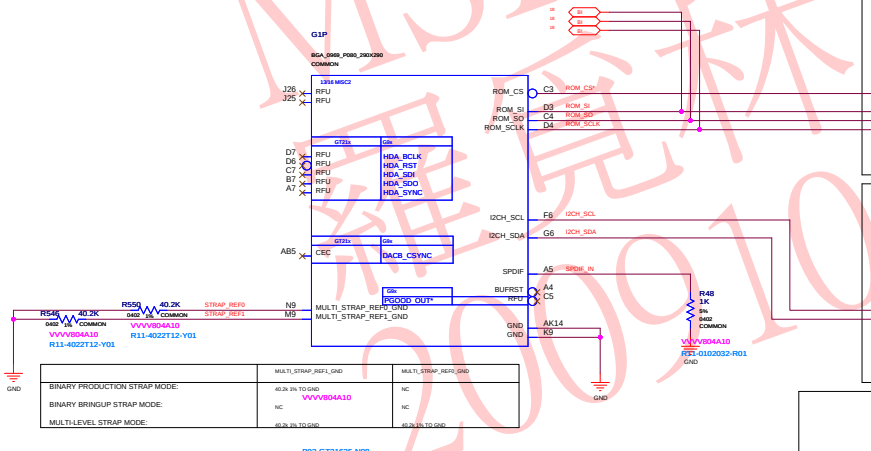


| | MULTI_STRAP_REF1_GND | MULTI_STRAP_REF0_GND |
|---|---|---|
| BINARY PRODUCTION STRAP MODE: | 40.2k 1% TO GND VVVV804A10 | NC |
| BINARY BRINGUP STRAP MODE: | NC | NC |
| MULTI-LEVEL STRAP MODE: | 40.2k 1% TO GND | 40.2k 1% TO GND |

B03-GT21625-N08

## BIOS ROM(serial)

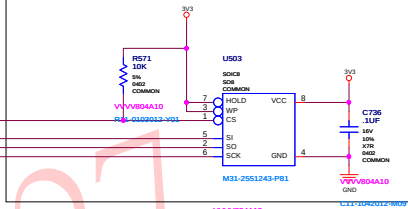


## HDCP I2C EEROM

## INFOROM

For Lab Use Only
I2C ADDRESS: 0XA8

| | |
|---|---|
| ASSEMBLY | BASE LEVEL GENERIC SCHEMATIC ONLY, COMMON & NO_STUFF ASSEMBLY NOTES AND BOM NOT FINAL |
| PAGE DETAIL | BIOS ROM, HDCP ROM, STRAPPING OPTIONS |


ALL NVIDIA DESIGN SPECIFICATIONS, REFERENCE SPECIFICATIONS, REFERENCE BOARDS, FILES, DRAWINGS, DIAGNOSTICS, LISTS AND OTHER DOCUMENTS OR INFORMATION (TOGETHER AND SEPARATELY, 'MATERIALS') ARE BEING PROVIDED 'AS IS'. THE MATERIALS MAY CONTAIN KNOWN AND UNKNOWN VIOLATIONS OR DEVIATIONS OF INDUSTRY STANDARDS AND SPECIFICATIONS. NVIDIA MAKES NO WARRANTIES, EXPRESSED, IMPLIED, STATUTORY OR OTHERWISE WITH RESPECT TO THE MATERIALS OR OTHERWISE, AND EXPRESSLY DISCLAIMS ALL IMPLIED WARRANTIES INCLUDING, WITHOUT LIMITATION, THE WARRANTIES OF DESIGN, OF NONINFRINGEMENT, MERCHANTABILITY OR FITNESS FOR A PARTICULAR PURPOSE, OR ARISING FROM A COURSE OF DEALING, TRADE USAGE, TRADE PRACTICE, OR INDUSTRY STANDARDS.



NVIDIA CORPORATION
2701 SAN TOMAS EXPRESSWAY
SANTA CLARA, CA 95050, USA


| | | | |
|---|---|---|---|
| NV_PN | 600-10681-base-100 A | | |
| ID | | PAGE | |
| NAME | | DATE | 05-FEB-2009 |


MSIS-RMA 鍵寬林 20091027

# LINEAR POWER SUPPLIES

Remove U4 UP7703 Circuit

## PEX_PLLVDD SUPPLY (OPTIAN)

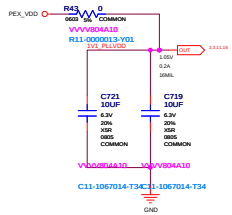


VOUT = Vref * ( 1 + Rbot / Rtop )
1.053V = 0.8V * ( 1 + 1k / 3.16k )

## IFP_PLLVDD SUPPLY

VOUT = Vref * ( 1 + Rbot / Rtop )
1.793V = 0.8V * ( 1 + 1k / 0.806k )

Change 5V Circuit SOT223-->SOT252

## 5V & DDC_5V REGULATOR

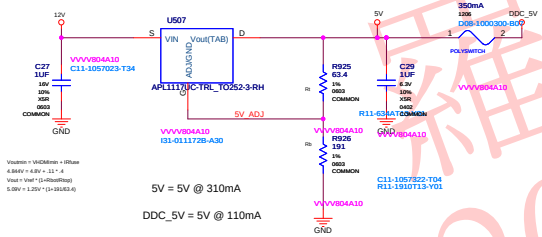


5V = 5V @ 310mA

DDC_5V = 5V @ 110mA

## IFP_IOVDD BACKDRIVE PREVENTION

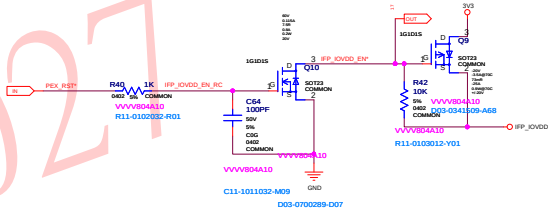


MSIS-RMA
羅覓林
20091027

| | |
|---|---|
| ASSEMBLY | BASE LEVEL GENERIC SCHEMATIC ONLY, COMMON & NO_STUFF ASSEMBLY NOTES AND BOM NOT FINAL |
| PAGE DETAIL | LINEAR POWER SUPPLIES |

ALL NVIDIA DESIGN SPECIFICATIONS, REFERENCE SPECIFICATIONS, REFERENCE BOARDS, FILES, DRAWINGS, DIAGNOSTICS, LISTS AND OTHER DOCUMENTS OR INFORMATION (TOGETHER AND SEPARATELY, 'MATERIALS') ARE BEING PROVIDED 'AS IS'. THE MATERIALS MAY CONTAIN KNOWN AND UNKNOWN VIOLATIONS OR DEVIATIONS OF INDUSTRY STANDARDS AND SPECIFICATIONS. NVIDIA MAKES NO WARRANTIES, EXPRESSED, IMPLIED, STATUTORY OR OTHERWISE WITH RESPECT TO THE MATERIALS OR OTHERWISE, AND EXPRESSLY DISCLAIMS ALL IMPLIED WARRANTIES INCLUDING, WITHOUT LIMITATION, THE WARRANTIES OF DESIGN, OF NONINFRINGEMENT, MERCHANTABILITY OR FITNESS FOR A PARTICULAR PURPOSE, OR ARISING FROM A COURSE OF DEALING, TRADE USAGE, TRADE PRACTICE, OR INDUSTRY STANDARDS.

NVIDIA CORPORATION
2701 SAN TOMAS EXPRESSWAY
SANTA CLARA, CA 95050, USA

| | | | |
|---|---|---|---|
| NV_PN | 600-10681-base-100 A | | |
| ID | | PAGE | |
| NAME | | DATE | 05-FEB-2009 |

# FBVDDQ/PEXVDD POWER SUPPLY

1.Remove C86,C105,C90
2.Add R917 LMOS Gate risister
3.Add L10
4.Add L9,R23,R24,R26,C86,C87,R26
5.Add EL 680UF FootPrint

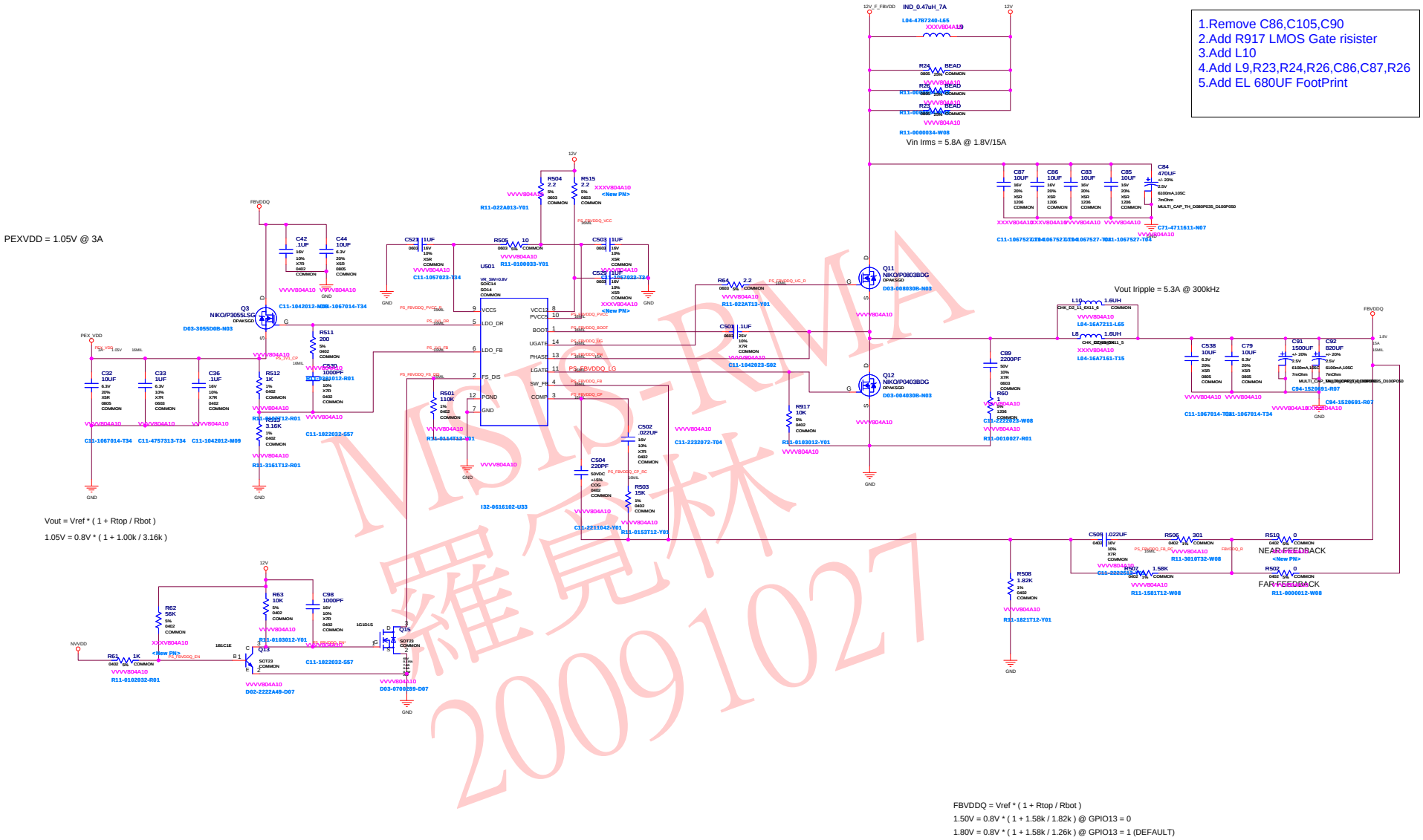


MSIS-RMA 羅覓林 20091027

| | |
|---|---|
| ASSEMBLY | BASE LEVEL GENERIC SCHEMATIC ONLY, COMMON & NO_STUFF ASSEMBLY NOTES AND BOM NOT FINAL |
| PAGE DETAIL | FBVDDQ/PEXVDD POWER SUPPLY |

ALL NVIDIA DESIGN SPECIFICATIONS, REFERENCE SPECIFICATIONS, REFERENCE BOARDS, FILES, DRAWINGS, DIAGNOSTICS, LISTS AND OTHER DOCUMENTS OR INFORMATION (TOGETHER AND SEPARATELY, 'MATERIALS') ARE BEING PROVIDED 'AS IS'. THE MATERIALS MAY CONTAIN KNOWN AND UNKNOWN VIOLATIONS OR DEVIATIONS OF INDUSTRY STANDARDS AND SPECIFICATIONS. NVIDIA MAKES NO WARRANTIES, EXPRESSED, IMPLIED, STATUTORY OR OTHERWISE WITH RESPECT TO THE MATERIALS OR OTHERWISE, AND EXPRESSLY DISCLAIMS ALL IMPLIED WARRANTIES INCLUDING, WITHOUT LIMITATION, THE WARRANTIES OF DESIGN, OF NONINFRINGEMENT, MERCHANTABILITY OR FITNESS FOR A PARTICULAR PURPOSE, OR ARISING FROM A COURSE OF DEALING, TRADE USAGE, TRADE PRACTICE, OR INDUSTRY STANDARDS.

NVIDIA CORPORATION
2701 SAN TOMAS EXPRESSWAY
SANTA CLARA, CA 95050, USA

| | | | |
|---|---|---|---|
| NV_PN | 600-10681-base-100 A | | |
| ID | | PAGE | |
| NAME | | DATE | 05-FEB-2009 |

# Power Supply III: NVVDD

1.Add L13
2.Remove APW7068 OCSET
3.Add GPIO 5,6 Circuit
4.Remove C927,C931,C933,C30,C38,C31
5.change C39 Footprint for 470uf and 270uf

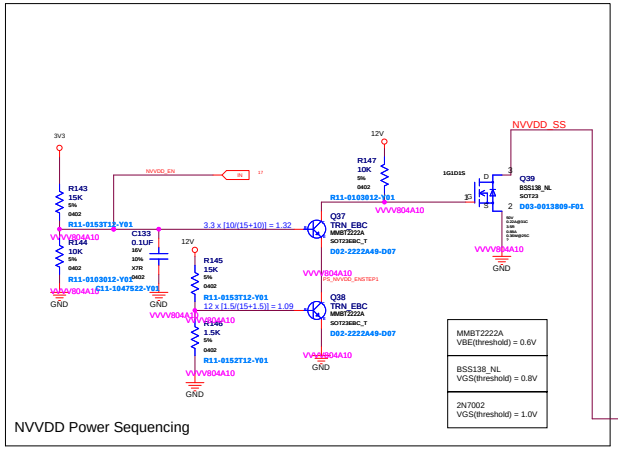

NVVDD Power Sequencing

Input Irms= 8A

| GPIO5 | GPIO6 | Rbn | Vout |
|---|---|---|---|
| 0 | 1 | Rb1 | 0.9000V |
| 1 | 0 | Rb2 | 1.0000V |
| 0 | 0 | Rb3 | 1.0625V |

Vout=Vref*(1+Rt/Rb)
Vout=0.8*(1+1.24k/Rbn)

Rb1 = R919 // R545 =8.75K
Rb2 = R919 // R554 =4.61K
Rb3 = R919 // R545 // R554 =3.78K

MSI-RMA 羅宜林 20091027

| | |
|---|---|
| ASSEMBLY | BASE LEVEL GENERIC SCHEMATIC ONLY, COMMON & NO_STUFF ASSEMBLY NOTES AND BOM NOT FINAL |
| PAGE DETAIL | NVVDD POWER SUPPLY |

ALL NVIDIA DESIGN SPECIFICATIONS, REFERENCE SPECIFICATIONS, REFERENCE BOARDS, FILES, DRAWINGS, DIAGNOSTICS, LISTS AND OTHER DOCUMENTS OR INFORMATION (TOGETHER AND SEPARATELY, 'MATERIALS') ARE BEING PROVIDED 'AS IS'. THE MATERIALS MAY CONTAIN KNOWN AND UNKNOWN VIOLATIONS OR DEVIATIONS OF INDUSTRY STANDARDS AND SPECIFICATIONS. NVIDIA MAKES NO WARRANTIES, EXPRESSED, IMPLIED, STATUTORY OR OTHERWISE WITH RESPECT TO THE MATERIALS OR OTHERWISE, AND EXPRESSLY DISCLAIMS ALL IMPLIED WARRANTIES INCLUDING, WITHOUT LIMITATION, THE WARRANTIES OF DESIGN, OF NONINFRINGEMENT, MERCHANTABILITY OR FITNESS FOR A PARTICULAR PURPOSE, OR ARISING FROM A COURSE OF DEALING, TRADE USAGE, TRADE PRACTICE, OR INDUSTRY STANDARDS.

NVIDIA CORPORATION
2701 SAN TOMAS EXPRESSWAY
SANTA CLARA, CA 95050, USA

| | | | |
|---|---|---|---|
| NV_PN | 600-10681-base-100 A | | |
| ID | | PAGE | |
| NAME | | DATE | 05-FEB-2009 |

Title: Basenet Report
Design: p681
Date: Jan 22 13:35:02 2009

Base nets and synonyms for
p681_lib.p681(@p681_lib.p681(sch_1))
Base Signal Location([Zone][dir])

1V1_ADJ 19.2B
1V1_PLLVDD 2.4G 3.5E 11.2A 16.3A
19.2C
1V8_ADJ 19.2F
3V3 2.1A
3V3_INFO 18.5F
5V 19.4C
5V_ADJ 19.4B
12V 2.1A
12V_D 19.4A
12V_F 21.1F
DACA_BLUE 9.4E 9.5A
DACA_BLUE_C 9.4H 9.5A 11.3G
DACA_GREEN 9.4E 9.5A
DACA_GREEN_C 9.4H 9.5A 11.3G
DACA_HSYNC 9.3C 9.5A
DACA_HSYNC_BUF 9.3E 9.5A
DACA_HSYNC_C 9.3H 9.5A 11.3G
DACA_HSYNC_R 9.3E 9.5A
DACA_RED 9.3E 9.5A
DACA_RED_C 9.3H 9.5A 11.3G
DACA_RSET 9.3B
DACA_VDD 9.2B
DACA_VREF 9.3B
DACA_VSYNC 9.3C 9.5A
DACA_VSYNC_BUF 9.2E 9.5A
DACA_VSYNC_C 9.2H 9.5A 11.3G
DACA_VSYNC_R 9.2E 9.5A
DACB_BLUE 10.4D 10.5A
DACB_BLUE_C 10.4F 10.5A
DACB_GREEN 10.4D 10.5A
DACB_GREEN_C 10.4F 10.5A
DACB_HSYNC 10.3C 10.5A
DACB_HSYNC_BUF 10.3E 10.5A
DACB_HSYNC_C 10.3G 10.5A
DACB_HSYNC_R 10.3E 10.5A
DACB_RED 10.3D 10.5A
DACB_RED_C 10.3F 10.5A
DACB_RSET 10.3B
DACB_VDD 10.2B
DACB_VREF 10.2B
DACB_VSYNC 10.3C 10.5A
DACB_VSYNC_BUF 10.2E 10.5A
DACB_VSYNC_C 10.2G 10.5A
DACB_VSYNC_R 10.2E 10.5A
DDC_5V 19.4D
FBA_CLK0 3.4D 4.2A 4.2C 4.5G
FBA_CLK0* 3.4D 4.2A 4.2C 4.5G
FBA_CLK1 3.4D 4.2D 4.2F 4.5G
FBA_CLK1* 3.4D 4.2D 4.2F 4.5G
FBA_CMD<0> 3.3C 3.4G 4.2A 4.2C
FBA_CMD<30..0> 3.3D 4.1A 4.1C 4.1D
4.1F 4.5G
FBA_CMD<1> 3.3C 3.4F 4.1A 4.1C
4.1E 4.1G
FBA_CMD<2> 3.3C 3.4G 4.1A 4.1C
FBA_CMD<3> 3.2G 3.3C 4.1A 4.1C
4.1E 4.1G
FBA_CMD<4> 3.1F 3.3C 4.1A 4.1C
4.1E 4.1G
FBA_CMD<5> 3.3C 3.3G 4.1A 4.1C
4.1E 4.1G
FBA_CMD<6> 3.1G 3.3C 4.1A 4.1C
4.1E 4.1G
FBA_CMD<7> 3.3C 3.4F 4.1A 4.1C
4.1E 4.1G
FBA_CMD<8> 3.3C 3.4H 4.1A 4.1C
4.1E 4.1G
FBA_CMD<9> 3.2F 3.3C 4.2A 4.2C
4.2E 4.2G
FBA_CMD<10> 3.2F 3.3C 4.1A 4.1C
4.1E 4.1G
FBA_CMD<11> 3.1F 3.3C 4.1E 4.1G
FBA_CMD<12> 3.1G 3.3C 4.2A 4.2C
4.2E 4.2G
FBA_CMD<13> 3.3C 3.3G 4.2A 4.2C
4.2E 4.2G
FBA_CMD<14> 3.3C 3.3F 4.1A 4.1C
4.1E 4.1G
FBA_CMD<16> 3.3C 3.4G 4.2E 4.2G
FBA_CMD<17> 3.3C 3.3G 4.1A 4.1C
4.1E 4.1G
FBA_CMD<18> 3.3C 3.4G 4.1E 4.1G
4.2A 4.2C
FBA_CMD<19> 3.2G 3.3C 4.1A 4.1C
4.1E 4.1G
FBA_CMD<20> 3.3F 3.4C 4.1A 4.1C
4.1E 4.1G

FBA_CMD<21> 3.2G 3.4C 4.1A 4.1C
4.1E 4.1G
FBA_CMD<22> 3.4C 3.4F 4.1E 4.1G
4.2A 4.2C
FBA_CMD<24> 3.3F 3.4C 4.1A 4.1C
4.1E 4.1G
FBA_CMD<25> 3.4C 3.4G 4.3A 4.3C
FBA_CMD<26> 3.2F 3.4C 4.1A 4.1C
4.1E 4.1G
FBA_CMD<27> 3.4C 3.4G 4.2E 4.2G
FBA_CMD<28> 3.4C 4.2E 4.2G 4.3A
4.3C
FBA_D<0> 3.1B 4.3B
FBA_D<63..0> 3.1A 4.3A 4.5G
FBA_D<1> 3.1B 4.3B
FBA_D<2> 3.1B 4.4B
FBA_D<3> 3.1B 4.4B
FBA_D<4> 3.1B 4.4B
FBA_D<5> 3.1B 4.4B
FBA_D<6> 3.1B 4.4B
FBA_D<7> 3.1B 4.4B
FBA_D<8> 3.1B 4.4B
FBA_D<9> 3.1B 4.4B
FBA_D<10> 3.1B 4.4B
FBA_D<11> 3.1B 4.4B
FBA_D<12> 3.2B 4.4B
FBA_D<13> 3.2B 4.4B
FBA_D<14> 3.2B 4.4B
FBA_D<15> 3.2B 4.4B
FBA_D<16> 3.2B 4.3C
FBA_D<17> 3.2B 4.3C
FBA_D<18> 3.2B 4.4C
FBA_D<19> 3.2B 4.4C
FBA_D<20> 3.2B 4.4C
FBA_D<21> 3.2B 4.4C
FBA_D<22> 3.2B 4.4C
FBA_D<23> 3.2B 4.4C
FBA_D<24> 3.2B 4.4C
FBA_D<25> 3.2B 4.4C
FBA_D<26> 3.2B 4.4C
FBA_D<27> 3.2B 4.4C
FBA_D<28> 3.2B 4.4C
FBA_D<29> 3.2B 4.4C
FBA_D<30> 3.2B 4.3D
FBA_D<31> 3.2B 4.3D
FBA_D<32> 3.2B 4.3D
FBA_D<33> 3.2B 4.3D
FBA_D<34> 3.2B 4.4D
FBA_D<35> 3.2B 4.4D
FBA_D<36> 3.2B 4.4D
FBA_D<37> 3.2B 4.4D
FBA_D<38> 3.2B 4.4D
FBA_D<39> 3.2B 4.4D
FBA_D<40> 3.2B 4.4D
FBA_D<41> 3.2B 4.4D
FBA_D<42> 3.3B 4.4D
FBA_D<43> 3.3B 4.4D
FBA_D<44> 3.3B 4.4D
FBA_D<45> 3.3B 4.4D
FBA_D<46> 3.3B 4.4E
FBA_D<47> 3.3B 4.4E
FBA_D<48> 3.3B 4.4E
FBA_D<49> 3.3B 4.4E
FBA_D<50> 3.3B 4.4E
FBA_D<51> 3.3B 4.4E
FBA_D<52> 3.3B 4.4E
FBA_D<53> 3.3B 4.4E
FBA_D<54> 3.3B 4.4E
FBA_D<55> 3.3B 4.4E
FBA_D<56> 3.3B 4.4E
FBA_D<57> 3.3B 4.4E
FBA_D<58> 3.3B 4.4E
FBA_D<59> 3.3B 4.4E
FBA_D<60> 3.3B 4.4E
FBA_D<61> 3.3B 4.4E
FBA_D<62> 3.3B 4.4E
FBA_D<63> 3.3B 4.4E
FBA_DEBUG 3.4C
FBA_DQM<0> 3.3B 4.4B
FBA_DQM<7..0> 3.3A 4.3A 4.5G
FBA_DQM<1> 3.3B 4.4B
FBA_DQM<2> 3.3B 4.4C
FBA_DQM<3> 3.3B 4.4C
FBA_DQM<4> 3.3B 4.4D
FBA_DQM<5> 3.3B 4.4D
FBA_DQM<6> 3.4B 4.4E
FBA_DQM<7> 3.4B 4.4E
FBA_DQS<0> 3.4B 4.4B 4.5E
FBA_DQS<7..0> 3.4A 4.3A 4.5E
FBA_DQS<1> 3.4B 4.4B 4.5E
FBA_DQS<2> 3.4B 4.4C 4.5E
FBA_DQS<3> 3.4B 4.4C 4.5E
FBA_DQS<4> 3.4B 4.4D 4.5E
FBA_DQS<5> 3.4B 4.4D 4.5E
FBA_DQS<6> 3.4B 4.4E 4.5E
FBA_DQS<7> 3.4B 4.4E 4.5E

FBA_DQSN<0> 3.4B 4.4B 4.5E
FBA_DQSN<7..0> 3.4A 4.3A 4.5E
FBA_DQSN<1> 3.4B 4.4B 4.5E
FBA_DQSN<2> 3.4B 4.4C 4.5E
FBA_DQSN<3> 3.4B 4.4C 4.5E
FBA_DQSN<4> 3.4B 4.4D 4.5E
FBA_DQSN<5> 3.4B 4.4D 4.5E
FBA_DQSN<6> 3.4B 4.4E 4.5E
FBA_DQSN<7> 3.4B 4.4E 4.5E
FBA_VREF 3.5B
FBA_VREF0 4.3C 4.3E 4.4G
FBA_VREF1 4.3F 4.3H 4.4H
FBA_ZQ0 4.3A
FBA_ZQ1 4.3C
FBA_ZQ2 4.3E
FBA_ZQ3 4.3G
FBC_CLK0 6.4D 7.2A 7.2C 7.5G
FBC_CLK0* 6.4D 7.2A 7.2C 7.5G
FBC_CLK1 6.4D 7.2D 7.2F 7.5G
FBC_CLK1* 6.4D 7.2D 7.2F 7.5G
FBC_CMD<0> 6.3C 6.4G 7.2A 7.2C
FBC_CMD<30..0> 6.3D 7.1A 7.1C 7.1D
7.1F 7.5G
FBC_CMD<1> 6.2F 6.3C 7.1A 7.1C
7.1E 7.1G
FBC_CMD<2> 6.1G 6.3C 7.1A 7.1C
FBC_CMD<3> 6.2G 6.3C 7.1A 7.1C
7.1E 7.1G
FBC_CMD<4> 6.2G 6.3C 7.1A 7.1C
7.1E 7.1G
FBC_CMD<5> 6.3C 6.4G 7.1A 7.1C
7.1E 7.1G
FBC_CMD<6> 6.3C 6.4F 7.1A 7.1C
7.1E 7.1G
FBC_CMD<7> 6.3C 6.3G 7.1A 7.1C
7.1E 7.1G
FBC_CMD<8> 6.3C 6.4F 7.1A 7.1C
7.1E 7.1G
FBC_CMD<9> 6.3C 6.3F 7.2A 7.2C
7.2E 7.2G
FBC_CMD<10> 6.3C 6.3G 7.1A 7.1C
7.1E 7.1G
FBC_CMD<11> 6.3C 6.4F 7.1E 7.1G
FBC_CMD<12> 6.3C 6.4G 7.2A 7.2C
7.2E 7.2G
FBC_CMD<13> 6.3C 6.3F 7.2A 7.2C
7.2E 7.2G
FBC_CMD<14> 6.1G 6.3C 7.1A 7.1C
7.1E 7.1G
FBC_CMD<16> 6.3C 6.4G 7.2E 7.2G
FBC_CMD<17> 6.3C 6.3G 7.1A 7.1C
7.1E 7.1G
FBC_CMD<18> 6.1F 6.3C 7.1E 7.1G
7.2A 7.2C
FBC_CMD<19> 6.3C 6.4F 7.1A 7.1C
7.1E 7.1G
FBC_CMD<20> 6.3F 6.4C 7.1A 7.1C
7.1E 7.1G
FBC_CMD<21> 6.3G 6.4C 7.1A 7.1C
7.1E 7.1G
FBC_CMD<22> 6.1F 6.4C 7.1E 7.1G
7.2A 7.2C
FBC_CMD<24> 6.2F 6.4C 7.1A 7.1C
7.1E 7.1G
FBC_CMD<25> 6.4C 6.4G 7.3A 7.3C
FBC_CMD<26> 6.2F 6.4C 7.1A 7.1C
7.1E 7.1G
FBC_CMD<27> 6.4C 6.4G 7.2E 7.2G
FBC_CMD<28> 6.4C 7.2E 7.2G 7.3A
7.3C
FBC_D<0> 6.1B 7.3B
FBC_D<63..0> 6.1A 7.3A 7.5G
FBC_D<1> 6.1B 7.4B
FBC_D<2> 6.1B 7.4B
FBC_D<3> 6.1B 7.4B
FBC_D<4> 6.1B 7.4B
FBC_D<5> 6.1B 7.4B
FBC_D<6> 6.1B 7.4B
FBC_D<7> 6.1B 7.4B
FBC_D<8> 6.1B 7.4B
FBC_D<9> 6.1B 7.4B
FBC_D<10> 6.1B 7.4B
FBC_D<11> 6.1B 7.4B
FBC_D<12> 6.2B 7.4B
FBC_D<13> 6.2B 7.4B
FBC_D<14> 6.2B 7.4B
FBC_D<15> 6.2B 7.4B
FBC_D<16> 6.2B 7.3C
FBC_D<17> 6.2B 7.4C
FBC_D<18> 6.2B 7.4C
FBC_D<19> 6.2B 7.4C
FBC_D<20> 6.2B 7.4C
FBC_D<21> 6.2B 7.4C
FBC_D<22> 6.2B 7.4C
FBC_D<23> 6.2B 7.4C
FBC_D<24> 6.2B 7.4C

FBC_D<25> 6.2B 7.4C
FBC_D<26> 6.2B 7.4C
FBC_D<27> 6.2B 7.4C
FBC_D<28> 6.2B 7.4C
FBC_D<29> 6.2B 7.4C
FBC_D<30> 6.2B 7.4C
FBC_D<31> 6.2B 7.4C
FBC_D<32> 6.2B 7.3D
FBC_D<33> 6.2B 7.4D
FBC_D<34> 6.2B 7.4D
FBC_D<35> 6.2B 7.4D
FBC_D<36> 6.2B 7.4D
FBC_D<37> 6.2B 7.4D
FBC_D<38> 6.2B 7.4D
FBC_D<39> 6.2B 7.4D
FBC_D<40> 6.2B 7.4D
FBC_D<41> 6.2B 7.4D
FBC_D<42> 6.3B 7.4D
FBC_D<43> 6.3B 7.4D
FBC_D<44> 6.3B 7.4D
FBC_D<45> 6.3B 7.4D
FBC_D<46> 6.3B 7.4D
FBC_D<47> 6.3B 7.4D
FBC_D<48> 6.3B 7.3E
FBC_D<49> 6.3B 7.4E
FBC_D<50> 6.3B 7.4E
FBC_D<51> 6.3B 7.4E
FBC_D<52> 6.3B 7.4E
FBC_D<53> 6.3B 7.4E
FBC_D<54> 6.3B 7.4E
FBC_D<55> 6.3B 7.4E
FBC_D<56> 6.3B 7.4E
FBC_D<57> 6.3B 7.4E
FBC_D<58> 6.3B 7.4E
FBC_D<59> 6.3B 7.4E
FBC_D<60> 6.3B 7.4E
FBC_D<61> 6.3B 7.4E
FBC_D<62> 6.3B 7.4E
FBC_D<63> 6.3B 7.4E
FBC_DEBUG 6.4C
FBC_DQM<0> 6.3B 7.4B
FBC_DQM<7..0> 6.3A 7.3A 7.5G
FBC_DQM<1> 6.3B 7.4B
FBC_DQM<2> 6.3B 7.4C
FBC_DQM<3> 6.3B 7.4C
FBC_DQM<4> 6.3B 7.4D
FBC_DQM<5> 6.3B 7.4D
FBC_DQM<6> 6.4B 7.4E
FBC_DQM<7> 6.4B 7.4E
FBC_DQS<0> 6.4B 7.4B 7.5E
FBC_DQS<7..0> 6.4A 7.3A 7.5E
FBC_DQS<1> 6.4B 7.4B 7.5E
FBC_DQS<2> 6.4B 7.4C 7.5E
FBC_DQS<3> 6.4B 7.4C 7.5E
FBC_DQS<4> 6.4B 7.4D 7.5E
FBC_DQS<5> 6.4B 7.4D 7.5E
FBC_DQS<6> 6.4B 7.4E 7.5E
FBC_DQS<7> 6.4B 7.4E 7.5E
FBC_DQSN<0> 6.4B 7.4B 7.5E
FBC_DQSN<7..0> 6.4A 7.3A 7.5E
FBC_DQSN<1> 6.4B 7.4B 7.5E
FBC_DQSN<2> 6.4B 7.4C 7.5E
FBC_DQSN<3> 6.4B 7.4C 7.5E
FBC_DQSN<4> 6.4B 7.4D 7.5E
FBC_DQSN<5> 6.4B 7.4D 7.5E
FBC_DQSN<6> 6.4B 7.4E 7.5E
FBC_DQSN<7> 6.4B 7.4E 7.5E
FBC_VREF0 7.3C 7.3E 7.4G
FBC_VREF1 7.3F 7.3H 7.4H
FBC_ZQ0 7.3A
FBC_ZQ1 7.3C
FBC_ZQ2 7.3E
FBC_ZQ3 7.3G
FBVDDQ 20.2H
FBVDDQ_RBOT 20.4F
FBVDDQ_VSEL 20.4E
FB_CAL_PD_VDDQ 6.5C
FB_CAL_PU_GND 6.5C
FB_CAL_TERM_GND 6.5C
FB_PLLAVDD 3.5C
GPIO0_HPD_DVI 11.4D
GPIO0_HPD_DVI_Q 11.4D
GPIOD_HPD_DVI_R 11.4E
GPIOD_HPD_DVI_R_L 11.3G
GPIO1_HPDC 12.4C
GPIO1_HPDC_Q 12.4D
GPIO1_HPDC_R 12.4F
GPIO1_HPDC_R_L 12.4G
GPIO4_FAN_TACH 17.3C
GPIO5_NVVDD_VSEL1 17.3D 21.1A 21.3A
GPIO8_NVVDD_VSEL2 17.3D 21.3A
GPIO7_NVVDD_VSEL3 17.3D 21.2A 21.4A
GPIO8_THERM_OVERTM 17.3C
I²
GPIO9_FAN_PWM 17.3C
GPIO9_FAN_PWM_Q 17.4F

GPIO9_FAN_PWM_Q_L 17.4G
GPIO9_FAN_PWM_R 17.3F
GPIO13_FBVDDQ_VSEL 17.4D 20.4D
GPIO16_FAN_PWM 17.4C
GPU_PLLVDD 16.3B
GPU_TESTMODE 2.5E
HDMI_PD_1 12.4B
I2CA_SCL 9.2C 9.2D
I2CA_SCL_C 9.2H 11.3G
I2CA_SCL_T 9.2F
I2CA_SDA 9.1D 9.2C
I2CA_SDA_C 9.1H 11.3G
I2CA_SDA_T 9.1F
I2CB_SCL 10.2C
I2CB_SCL_R 10.1E
I2CB_SCL_R_L 10.1G
I2CB_SDA 10.2C
I2CB_SDA_R 10.1E
I2CB_SDA_R_L 10.1G
I2CC_SCL 17.2B 17.3F 18.5E
I2CC_SCL_G 17.3C
I2CC_SDA 17.2B 17.3F 18.5E
I2CC_SDA_G 17.3C
I2CH_SCL 18.4D
I2CH_SDA 18.4D
I2CS_SCL 2.1C 17.3F
I2CS_SDA 2.2C 17.3F
I2CW_SCL 12.3C
I2CW_SCL_R 12.2D
I2CW_SCL_R_Q 12.2E
I2CW_SDA 12.3C
I2CW_SDA_R 12.1D
I2CW_SDA_R_Q 12.1E
IFPAB_IOVDD 11.3B
IFPAB_PLLVDD 11.2B
IFPAB_RSET 11.3B
IFPA_TXC 11.3D
IFPA_TXC* 11.3D
IFPA_TXD0 11.2D
IFPA_TXD0* 11.2D
IFPA_TXD1 11.2D
IFPA_TXD1* 11.2D
IFPA_TXD2 11.3D
IFPA_TXD2* 11.2D
IFPB_TXD4 11.3D
IFPB_TXD4* 11.3D
IFPB_TXD5 11.3D
IFPB_TXD5* 11.3D
IFPB_TXD6 11.3D
IFPB_TXD6* 11.3D
IFPCEF_PLLVDD 14.3C
IFPC_IOVDD 12.3A
IFPC_PLLVDD 12.3A
IFPC_RSET 12.3A
IFPC_TXC 12.3D
IFPC_TXC* 12.3D
IFPC_TXC_C1 12.3F 12.4B
IFPC_TXC_C1* 12.3F 12.4B
IFPC_TXD0 12.3D
IFPC_TXD0* 12.3D
IFPC_TXD0_C1 12.3F 12.4B
IFPC_TXD0_C1* 12.3F 12.4B
IFPC_TXD1 12.3D
IFPC_TXD1* 12.3D
IFPC_TXD1_C1 12.3F 12.4B
IFPC_TXD1_C1* 12.3F 12.4B
IFPC_TXD2 12.3D
IFPC_TXD2* 12.3D
IFPC_TXD2_C1 12.3F 12.4B
IFPC_TXD2_C1* 12.3F 12.4B
IFPD_IOVDD 13.3C
IFPD_PLLVDD 13.3C
IFPEF_IOVDD 14.3C
IFP_IOVDD_EN* 17.2E 19.4G
IFP_IOVDD_EN_RC 19.4F
IFP_PLLVDD 12.2A 18.2G
JTAG_TCLK 2.1C 17.4A
JTAG_TDI 2.1C 17.4A
JTAG_TDO 2.1C 17.5A
JTAG_TMS 2.1C 17.4A
JTAG_TRST* 2.1C 17.5A
MIOA_CLKIN 15.2D
MIOA_VDDQ 15.1C
MIOB_CLKIN 15.4D
NVVDD 21.2H
NVVDD_CP 21.3C
NVVDD_CP_RC 21.4D
NVVDD_CSN 21.3D
NVVDD_CSN_R 21.3D
NVVDD_CSP 21.3D
NVVDD_EAP 21.3C
NVVDD_EN 17.2F 21.2A
NVVDD_EN* 17.1E
NVVDD_FB 21.4D
NVVDD_FB_RC 21.4D
NVVDD_GND_SENSE 2.4F 21.4B

NVVDD_GND_SENSE_R 21.2B 21.4C
NVVDD_IOFS 21.2C
NVVDD_MODE 21.2C
NVVDD_MODE_Q 21.1B
NVVDD_MODE_R 21.2B
NVVDD_REFIN 21.3C
NVVDD_RSET 21.3C
NVVDD_SENSE 2.4F 21.4D
NVVDD_SENSE_R 21.4E
NVVDD_SS 21.3C
NVVDD_VID 21.3C
NVVDD_VREF 21.3C
NVVDD_VSEL2 21.3B
NVVDD_VSEL2_Q 21.3B
NVVDD_VSEL3 21.4B
NVVDD_VSEL3_Q 21.3C
PEX_CLKREQ* 2.1C
PEX_PLLVDD 2.4E
PEX_PLL_CLK_OUT 2.2C
PEX_PLL_CLK_OUT* 2.2C
PEX_PRSNT1* 2.1A
PEX_REFCLK 2.1G 2.2B
PEX_REFCLK* 2.1G 2.2B
PEX_RST* 2.2D 19.4E
PEX_RX0 2.2B 2.4G
PEX_RX0* 2.2B 2.4G
PEX_RX1 2.2B 2.4G
PEX_RX1* 2.2B 2.4G
PEX_RX2 2.2B 2.4G
PEX_RX2* 2.3B 2.4G
PEX_RX3 2.3B 2.4G
PEX_RX3* 2.3B 2.4G
PEX_RX4 2.3B 2.4G
PEX_RX4* 2.3B 2.4G
PEX_RX5 2.3B 2.4G
PEX_RX5* 2.3B 2.4G
PEX_RX6 2.3B 2.4G
PEX_RX6* 2.3B 2.4G
PEX_RX7 2.3B 2.4G
PEX_RX7* 2.4B 2.4G
PEX_RX8 2.4B 2.4G
PEX_RX8* 2.4B 2.4G
PEX_RX9 2.4B 2.4G
PEX_RX9* 2.4B 2.4G
PEX_RX10 2.4B 2.4G
PEX_RX10* 2.4B 2.4G
PEX_RX11 2.4B 2.4G
PEX_RX11* 2.4B 2.4G
PEX_RX12 2.4B 2.5G
PEX_RX12* 2.5B 2.5G
PEX_RX13 2.5B 2.5G
PEX_RX13* 2.5B 2.5G
PEX_RX14 2.5B 2.5G
PEX_RX14* 2.5B 2.5G
PEX_RX15 2.5B 2.5G
PEX_RX15* 2.5B 2.5G
PEX_SMCLK 2.1B
PEX_SMDAT 2.1B
PEX_TCLK 2.1B
PEX_TDI 2.1B
PEX_TDO 2.1B
PEX_TERMP 2.5E
PEX_TMS 2.1B
PEX_TRST* 2.1B
PEX_TX0 2.1G 2.2D
PEX_TX0* 2.1G 2.2D
PEX_TX1 2.1G 2.2D
PEX_TX1* 2.1G 2.2D
PEX_TX2 2.2D 2.2G
PEX_TX2* 2.2D 2.2G
PEX_TX3 2.2G 2.3D
PEX_TX3* 2.2G 2.3D
PEX_TX4 2.2G 2.3D
PEX_TX4* 2.2G 2.3D
PEX_TX5 2.2G 2.3D
PEX_TX5* 2.2G 2.3D
PEX_TX6 2.2G 2.3D
PEX_TX6* 2.2G 2.3D
PEX_TX7 2.2G 2.3D
PEX_TX7* 2.2G 2.3D
PEX_TX8 2.2G 2.4D
PEX_TX8* 2.2G 2.4D
PEX_TX9 2.2G 2.4D
PEX_TX9* 2.2G 2.4D
PEX_TX10 2.2G 2.4D
PEX_TX10* 2.2G 2.4D
PEX_TX11 2.2G 2.4D
PEX_TX11* 2.2G 2.4D
PEX_TX12 2.2G 2.4D
PEX_TX12* 2.2G 2.4D
PEX_TX13 2.2G 2.5D
PEX_TX13* 2.2G 2.5D
PEX_TX14 2.2G 2.5D
PEX_TX14* 2.2G 2.5D
PEX_TX15 2.2G 2.5D
PEX_TX15* 2.2G 2.5D

PEX_TX0 2.2B 2.3G
PEX_TX0* 2.2B 2.3G
PEX_TX1 2.2B 2.3G
PEX_TX1* 2.2B 2.3G
PEX_TX2 2.2B 2.3G
PEX_TX2* 2.2B 2.3G
PEX_TX3 2.3B 2.3G
PEX_TX3* 2.3B 2.3G
PEX_TX4 2.3B 2.3G
PEX_TX4* 2.3B 2.3G
PEX_TX5 2.3B 2.3G
PEX_TX5* 2.3B 2.3G
PEX_TX6 2.3B 2.3G
PEX_TX6* 2.3B 2.3G
PEX_TX7 2.3B 2.3G
PEX_TX7* 2.3B 2.3G
PEX_TX8 2.3G 2.4B
PEX_TX8* 2.3G 2.4B
PEX_TX9 2.3G 2.4B
PEX_TX9* 2.3G 2.4B
PEX_TX10 2.3G 2.4B
PEX_TX10* 2.3G 2.4B
PEX_TX11 2.3G 2.4B
PEX_TX11* 2.3G 2.4B
PEX_TX12 2.3G 2.4B
PEX_TX12* 2.3G 2.4B
PEX_TX13 2.3G 2.5B
PEX_TX13* 2.3G 2.5B
PEX_TX14 2.3G 2.5B
PEX_TX14* 2.4G 2.5B
PEX_TX15 2.4G 2.5B
PEX_TX15* 2.4G 2.5B
PEX_VDD 20.3B
PS_1V1_CP 20.3B
PS_1V1_DR 20.2C
PS_1V1_FB 20.3C
PS_FBVDDQ_BOOT 20.2D
PS_FBVDDQ_CP 20.3D
PS_FBVDDQ_CP_RC 20.3D
PS_FBVDDQ_EN 20.4B
PS_FBVDDQ_EN* 20.4C
PS_FBVDDQ_FB 20.3D
PS_FBVDDQ_FB_RC 20.4G
PS_FBVDDQ_FS_DIS 20.3C
PS_FBVDDQ_LG 20.3D
PS_FBVDDQ_PH 20.3D
PS_FBVDDQ_PVCC 20.2D
PS_FBVDDQ_PVCC_R 20.2C
PS_FBVDDQ_RC 20.2F
PS_FBVDDQ_UG 20.2D
PS_FBVDDQ_UG_R 20.2E
PS_FBVDDQ_VCC 20.2D
PS_NVVDD_BOOT1 21.2D
PS_NVVDD_BOOT2 21.3D
PS_NVVDD_EN 21.2C
PS_NVVDD_EN* 21.2B
PS_NVVDD_LG1 21.2D
PS_NVVDD_LG2 21.3D
PS_NVVDD_PH1 21.2D
PS_NVVDD_PH2 21.3D
PS_NVVDD_RC1 21.2F
PS_NVVDD_RC2 21.3F
PS_NVVDD_UG1 21.2D
PS_NVVDD_UG1_R 21.2E
PS_NVVDD_UG2 21.3D
PS_NVVDD_UG2_R 21.3E
PS_NVVDD_VCC9 21.2C
PS_NVVDD_VCC12 21.2C
ROM_CS* 18.3D
ROM_SCLK 18.2C 18.3D 18.3D
ROM_SI 18.2C 18.3D 18.3D
ROM_SO 18.2C 18.3D 18.3D
SNN_3V3AUX 2.1A
SNN_BIOB_HSYNC 15.4D
SNN_BTXC 11.3D
SNN_BTXC* 11.3D
SNN_BUFRST* 18.4D
SNN_CEC 18.4C
SNN_FBA0_CKE1 4.2A
SNN_FBA0_CS1 4.2A
SNN_FBA0_NC_A1 4.3A
SNN_FBA0_NC_A11 4.3A
SNN_FBA0_NC_T1 4.3A
SNN_FBA0_NC_T11 4.3A
SNN_FBA0_ODT1 4.2A
SNN_FBA0_ZQ1 4.2A
SNN_FBA1_CKE1 4.2C
SNN_FBA1_CS1 4.2C
SNN_FBA1_NC_A1 4.3C
SNN_FBA1_NC_A11 4.3C
SNN_FBA1_NC_T1 4.3C
SNN_FBA1_NC_T11 4.3C
SNN_FBA1_ODT1 4.2C
SNN_FBA1_ZQ1 4.2C
SNN_FBA2_CKE1 4.2E
SNN_FBA2_CS1 4.2E

MSI-RMA 羅馬林 20091027

| | |
|---|---|
| ASSEMBLY | BASE LEVEL GENERIC SCHEMATIC ONLY, COMMON & NO_STUFF ASSEMBLY NOTES AND BOM NOT FINAL |
| PAGE DETAIL | <edit here to insert page detail> |

ALL NVIDIA DESIGN SPECIFICATIONS, REFERENCE SPECIFICATIONS, REFERENCE BOARDS, FILES, DRAWINGS, DIAGNOSTICS, LISTS AND OTHER DOCUMENTS OR INFORMATION (TOGETHER AND SEPARATELY, 'MATERIALS') ARE BEING PROVIDED 'AS IS'. THE MATERIALS MAY CONTAIN KNOWN AND UNKNOWN VIOLATIONS OR DEVIATIONS OF INDUSTRY STANDARDS AND SPECIFICATIONS. NVIDIA MAKES NO WARRANTIES, EXPRESSED, IMPLIED, STATUTORY OR OTHERWISE WITH RESPECT TO THE MATERIALS OR OTHERWISE, AND EXPRESSLY DISCLAIMS ALL IMPLIED WARRANTIES INCLUDING, WITHOUT LIMITATION, THE WARRANTIES OF DESIGN, OF NONINFRINGEMENT, MERCHANTABILITY OR FITNESS FOR A PARTICULAR PURPOSE, OR ARISING FROM A COURSE OF DEALING, TRADE USAGE, TRADE PRACTICE, OR INDUSTRY STANDARDS.

NVIDIA CORPORATION
2701 SAN TOMAS EXPRESSWAY
SANTA CLARA, CA 95050, USA

| | | | |
|---|---|---|---|
| NV_PN | 600-10681-base-100 A | | |
| ID | | PAGE | |
| NAME | <ENGINEER> | DATE | 05-FEB-2009 |

SNN_FBA2_NC_A1 4.3E
SNN_FBA2_NC_A11 4.3E
SNN_FBA2_NC_T1 4.3E
SNN_FBA2_NC_T11 4.3E
SNN_FBA2_ODT1 4.2E
SNN_FBA2_ZQ1 4.2E
SNN_FBA3_CKE1 4.2G
SNN_FBA3_CS1 4.2G
SNN_FBA3_NC_A1 4.3G
SNN_FBA3_NC_A11 4.3G
SNN_FBA3_NC_T1 4.3G
SNN_FBA3_NC_T11 4.3G
SNN_FBA3_ODT1 4.2G
SNN_FBA3_ZQ1 4.2G
SNN_FBA_CMD<15> 3.3C
SNN_FBA_CMD<23> 3.4C
SNN_FBA_CMD<29> 3.4C
SNN_FBA_CMD<30> 3.4C
SNN_FBA_RFU<0> 3.4B
SNN_FBA_RFU<1> 3.4B
SNN_FBA_RFU<2> 3.4B
SNN_FBA_RFU<3> 3.4B
SNN_FBA_RFU<4> 3.4B
SNN_FBA_RFU<5> 3.4B
SNN_FBA_RFU<6> 3.4B
SNN_FBA_RFU<7> 3.5B
SNN_FBC0_CKE1 7.2A
SNN_FBC0_CS1 7.2A
SNN_FBC0_NC_A1 7.3A
SNN_FBC0_NC_A11 7.3A
SNN_FBC0_NC_T1 7.3A
SNN_FBC0_NC_T11 7.3A
SNN_FBC0_ODT1 7.2A
SNN_FBC0_ZQ1 7.2A
SNN_FBC1_CKE1 7.2C
SNN_FBC1_CS1 7.2C
SNN_FBC1_NC_A1 7.3C
SNN_FBC1_NC_A11 7.3C
SNN_FBC1_NC_T1 7.3C
SNN_FBC1_NC_T11 7.3C
SNN_FBC1_ODT1 7.2C
SNN_FBC1_ZQ1 7.2C
SNN_FBC2_CKE1 7.2E
SNN_FBC2_CS1 7.2E
SNN_FBC2_NC_A1 7.3E
SNN_FBC2_NC_A11 7.3E
SNN_FBC2_NC_T1 7.3E
SNN_FBC2_NC_T11 7.3E
SNN_FBC2_ODT1 7.2E
SNN_FBC2_ZQ1 7.2E
SNN_FBC3_CKE1 7.2G
SNN_FBC3_CS1 7.2G
SNN_FBC3_NC_A1 7.3G
SNN_FBC3_NC_A11 7.3G
SNN_FBC3_NC_T1 7.3G
SNN_FBC3_NC_T11 7.3G
SNN_FBC3_ODT1 7.2G
SNN_FBC3_ZQ1 7.2G
SNN_FBC_CMD<15> 6.3C
SNN_FBC_CMD<23> 6.4C
SNN_FBC_CMD<29> 6.4C
SNN_FBC_CMD<30> 6.4C
SNN_FBC_RFU1 6.5C
SNN_FBC_RFU2 6.5C
SNN_FBC_RFU<0> 6.4B
SNN_FBC_RFU<1> 6.4B
SNN_FBC_RFU<2> 6.4B
SNN_FBC_RFU<3> 6.4B
SNN_FBC_RFU<4> 6.4B
SNN_FBC_RFU<5> 6.5B
SNN_FBC_RFU<6> 6.5B
SNN_FBC_RFU<7> 6.5B
SNN_GND_SENSE_1 2.4E
SNN_GND_SENSE_3 2.4E
SNN_GPIO2 17.3C
SNN_GPIO3 17.3C
SNN_GPIO10 17.3C
SNN_GPIO11 17.3C
SNN_GPIO12 17.3C
SNN_GPIO14 17.4C
SNN_GPIO15 14.3E
SNN_GPIO17 17.4C
SNN_GPIO18 17.4C
SNN_GPIO19 13.3E
SNN_GPIO20 17.4C
SNN_GPIO21 14.4E
SNN_GPIO22 17.4C
SNN_GPIO23 17.4C
SNN_HDA_BCLK 18.4C
SNN_HDA_RST* 18.4C
SNN_HDA_SDI 18.4C
SNN_HDA_SDO 18.4C
SNN_HDA_SYNC 18.4C
SNN_HDMI_CEC 12.3G
SNN_HDMI_RSVD 12.3G
SNN_I2CD_SCL 17.3C
SNN_I2CD_SDA 17.3C
SNN_I2CE_SCL 17.3C
SNN_I2CE_SDA 17.3C
SNN_I2C_EN 12.3E
SNN_I2C_NC 12.2D
SNN_IFPA_TXD3 11.3D
SNN_IFPA_TXD3* 11.3D
SNN_IFPB_TXD7 11.3D
SNN_IFPB_TXD7* 11.3D
SNN_IFPD_AUX 13.3E
SNN_IFPD_AUX* 13.3E
SNN_IFPD_L0 13.3E
SNN_IFPD_L0* 13.3E
SNN_IFPD_L1 13.3E
SNN_IFPD_L1* 13.3E
SNN_IFPD_L2 13.3E
SNN_IFPD_L2* 13.3E
SNN_IFPD_L3 13.3E
SNN_IFPD_L3* 13.3E
SNN_IFPD_RSET 13.3C
SNN_IFPEF_RSET 14.3C
SNN_IFPE_AUX 14.2E
SNN_IFPE_AUX* 14.2E
SNN_IFPE_TXC 14.3E
SNN_IFPE_TXC* 14.2E
SNN_IFPE_TXD0 14.3E
SNN_IFPE_TXD0* 14.3E
SNN_IFPE_TXD1 14.3E
SNN_IFPE_TXD1* 14.3E
SNN_IFPE_TXD2 14.3E
SNN_IFPE_TXD2* 14.3E
SNN_IFPF_AUX 14.3E
SNN_IFPF_AUX* 14.3E
SNN_IFPF_TXC 14.3E
SNN_IFPF_TXC* 14.3E
SNN_IFPF_TXD0 14.3E
SNN_IFPF_TXD0* 14.3E
SNN_IFPF_TXD1 14.3E
SNN_IFPF_TXD1* 14.3E
SNN_IFPF_TXD2 14.4E
SNN_IFPF_TXD2* 14.4E
SNN_J25 18.3C
SNN_J26 18.3C
SNN_MIOACAL_PD_VDD 15.2B
Q
SNN_MIOACAL_PU_GND 15.2B
SNN_MIOAD<0> 15.1D
SNN_MIOAD<1> 15.1D
SNN_MIOAD<2> 15.1D
SNN_MIOAD<3> 15.2D
SNN_MIOAD<4> 15.2D
SNN_MIOAD<5> 15.2D
SNN_MIOAD<6> 15.2D
SNN_MIOAD<7> 15.2D
SNN_MIOAD<8> 15.2D
SNN_MIOAD<9> 15.2D
SNN_MIOAD<10> 15.2D
SNN_MIOAD<11> 15.2D
SNN_MIOAD<12> 15.2D
SNN_MIOAD<13> 15.2D
SNN_MIOAD<14> 15.2D
SNN_MIOAD_CTL3 15.2D
SNN_MIOA_CLKOUT 15.2D
SNN_MIOA_CLKOUT* 15.2D
SNN_MIOA_DE 15.2D
SNN_MIOA_HSYNC 15.2D
SNN_MIOA_VREF 15.2B
SNN_MIOA_VSYNC 15.2D
SNN_MIOB<0> 15.3D
SNN_MIOB<1> 15.3D
SNN_MIOB<2> 15.3D
SNN_MIOB<3> 15.3D
SNN_MIOB<4> 15.3D
SNN_MIOB<5> 15.4D
SNN_MIOB<6> 15.4D
SNN_MIOB<7> 15.4D
SNN_MIOB<8> 15.4D
SNN_MIOB<9> 15.4D
SNN_MIOB<10> 15.4D
SNN_MIOB<11> 15.4D
SNN_MIOBD<12> 15.4D
SNN_MIOBD<13> 15.4D
SNN_MIOBD<14> 15.4D
SNN_MIOB_CAL_PD_VD 15.4B
DQ
SNN_MIOB_CAL_PU_GN 15.4B
D
SNN_MIOB_CLKOUT 15.4D
SNN_MIOB_CLKOUT* 15.4D
SNN_MIOB_CTL3 15.4D
SNN_MIOB_DE 15.4D
SNN_MIOB_VREF 15.4B
SNN_MIOB_VSYNC 15.4D
SNN_NC<1> 2.2E
SNN_NC<2> 2.2E
SNN_NC<3> 2.2E
SNN_NC<4> 2.2E
SNN_NC<5> 2.3E
SNN_NC<6> 2.3E
SNN_NC<7> 2.3E
SNN_NC<8> 2.3E
SNN_NC<9> 2.3E
SNN_NC<10> 2.3E
SNN_NC<11> 2.3E
SNN_NC<14> 2.3E
SNN_NC<15> 2.3E
SNN_NC<17> 2.3E
SNN_NC<18> 2.3E
SNN_NC<21> 2.3E
SNN_NC<22> 2.3E
SNN_NC<23> 2.3E
SNN_PEX_RFU 2.5E
SNN_PEX_WAKE* 2.2B
SNN_PE_PRSNT2_A 2.1A
SNN_PE_PRSNT2_B 2.2A
SNN_PE_PRSNT2_C 2.3A
SNN_PE_RSVD2 2.2A
SNN_PE_RSVD3 2.2A
SNN_PE_RSVD4 2.2A
SNN_PE_RSVD5 2.2A
SNN_PE_RSVD6 2.3A
SNN_PE_RSVD7 2.4A
SNN_PE_RSVD8 2.4A
SNN_PGOOD_OUT* 18.4D
SNN_VDD_SENSE_1 2.4E
SNN_VDD_SENSE_3 2.4E
SNN_VGA_ID0 10.4G
SNN_VGA_ID0L 10.4G
SNN_VGA_ID2 10.4G
SNN_VGA_ID2L 10.5G
SPDIF_IN 18.4D
STRAP0 15.4E 18.2A
STRAP1 15.4E 18.2A
STRAP2 15.4E 18.2A
STRAP_REF0 18.4C
STRAP_REF1 18.4C
THERM_ALERT 17.2C
THERM_DA 17.3B
THERM_DC 17.3B
THERM_NPN 17.2E
THERM_OVERTMP* 17.2D
THERM_PNP 17.1E
THERM_THERM 17.2C
XTAL_IN 16.3C
XTAL_OUT 16.3D
XTAL_OUTBUFF 16.3D
XTAL_SSIN 16.3C

MSIS-RMA
羅覺林
20091027

| | |
|---|---|
| ASSEMBLY | BASE LEVEL GENERIC SCHEMATIC ONLY, COMMON & NO_STUFF ASSEMBLY NOTES AND BOM NOT FINAL |
| PAGE DETAIL | <edit here to insert page detail> |

ALL NVIDIA DESIGN SPECIFICATIONS, REFERENCE SPECIFICATIONS, REFERENCE BOARDS, FILES, DRAWINGS, DIAGNOSTICS, LISTS AND OTHER DOCUMENTS OR INFORMATION (TOGETHER AND SEPARATELY, 'MATERIALS') ARE BEING PROVIDED 'AS IS'. THE MATERIALS MAY CONTAIN KNOWN AND UNKNOWN VIOLATIONS OR DEVIATIONS OF INDUSTRY STANDARDS AND SPECIFICATIONS. NVIDIA MAKES NO WARRANTIES, EXPRESSED, IMPLIED, STATUTORY OR OTHERWISE WITH RESPECT TO THE MATERIALS OR OTHERWISE, AND EXPRESSLY DISCLAIMS ALL IMPLIED WARRANTIES INCLUDING, WITHOUT LIMITATION, THE WARRANTIES OF DESIGN, OF NONINFRINGEMENT, MERCHANTABILITY OR FITNESS FOR A PARTICULAR PURPOSE, OR ARISING FROM A COURSE OF DEALING, TRADE USAGE, TRADE PRACTICE, OR INDUSTRY STANDARDS.

NVIDIA CORPORATION
2701 SAN TOMAS EXPRESSWAY
SANTA CLARA, CA 95050, USA

| | | | |
|---|---|---|---|
| NV_PN | 600-10681-base-100 A | | |
| ID | | PAGE | |
| NAME | <ENGINEER> | DATE | 05-FEB-2009 |

Title: Cnxf Part
Report:
Design: p681
Date: Jan 22
13:35:02 2009

BKT1 [16.4E]
C1 [12.4F]
C2 [10.3G]
C3 [12.3G]
C4 [11.2G]
C5 [12.4F]
C6 [10.3G]
C7 [9.2G]
C8 [9.1G]
C9 [19.4D]
C10 [9.2G]
C11 [9.3G]
C12 [12.2D]
C13 [12.3E]
C14 [12.3E]
C15 [12.3E]
C16 [12.3E]
C17 [12.3E]
C18 [12.3E]
C19 [12.3E]
C20 [12.3E]
C21 [12.2G]
C22 [10.2G]
C23 [11.4F]
C24 [10.1G]
C25 [10.2G]
C26 [10.2F]
C27 [9.2F]
C28 [19.4C]
C29 [11.4E]
C30 [19.4B]
C31 [20.3B]
C32 [19.4C]
C33 [21.1E]
C34 [20.3B]
C35 [21.1E]
C36 [19.4B]
C37 [19.4A]
C38 [20.3B]
C39 [21.3B]
C40 [21.3G]
C41 [20.2C]
C42 [21.3F]
C43 [21.3B]
C44 [20.2C]
C45 [17.4G]
C46 [21.3G]
C47 [17.4G]
C48 [21.3F]
C49 [2.1A]
C50 [17.3G]
C51 [21.1G]
C52 [21.3C]
C53 [18.5F]
C54 [21.1F]
C55 [18.4F]
C56 [21.4D]
C57 [21.4G]
C58 [17.4C]
C59 [2.1A]
C60 [2.1A]
C61 [21.1G]
C62 [21.4H]
C63 [19.4F]
C64 [21.1F]
C65 [21.3H]
C66 [16.3C]
C67 [16.3D]
C68 [19.2B]
C69 [19.2C]
C70 [2.4G]
C71 [16.3A]
C72 [8.3B]
C73 [10.3B]
C74 [8.3B]
C75 [8.3A]
C76 [8.1D]
C77 [8.2D]
C78 [8.2A]
C79 [21.4B]
C80 [5.4F]
C81 [8.1B]
C82 [8.2B]
C83 [20.2G]
C84 [20.2H]
C85 [20.3G]
C86 [20.2F]
C87 [20.2G]
C88 [20.3G]

C89 [20.2F]
C90 [20.2F]
C91 [20.3H]
C92 [21.4G]
C93 [20.3G]
C94 [5.3D]
C95 [5.3D]
C96 [5.3B]
C97 [5.1D]
C98 [5.1A]
C99 [20.4C]
C100 [5.3B]
C101 [5.3A]
C102 [5.2D]
C103 [20.4F]
C104 [5.4F]
C105 [5.4F]
C106 [5.5C]
C107 [20.3G]
C108 [20.3D]
C109 [20.3F]
C110 [20.3D]
C111 [21.4D]
C112 [21.4D]
C113 [21.3E]
C114 [21.4H]
C115 [21.4G]
C116 [20.2G]
C117 [21.4H]
C118 [21.4G]
C119 [15.2B]
C120 [21.3C]
C130 [17.1E]
C131 [17.2E]
C133 [21.4E]
C501 [20.2E]
C502 [20.2D]
C503 [5.2C]
C504 [5.4A]
C505 [5.4A]
C506 [5.5C]
C507 [5.4F]
C508 [5.2B]
C509 [5.2C]
C510 [5.1C]
C511 [5.2A]
C512 [5.2B]
C513 [5.4F]
C514 [5.4C]
C515 [5.2C]
C516 [2.4C]
C517 [20.2C]
C518 [5.4F]
C519 [5.3A]
C520 [5.4F]
C521 [5.1A]
C522 [5.3D]
C523 [5.2A]
C524 [5.1D]
C525 [20.2D]
C526 [20.3C]
C527 [5.3D]
C528 [5.3A]
C529 [5.1B]
C530 [4.4H]
C531 [5.3D]
C532 [4.4G]
C533 [5.3D]
C534 [5.4C]
C535 [5.4D]
C536 [5.2D]
C537 [5.2B]
C538 [5.3C]
C539 [5.3C]
C540 [5.3B]
C541 [5.3B]
C542 [5.2D]
C543 [5.1C]
C544 [5.2A]
C545 [5.1B]
C546 [5.4B]
C547 [5.2A]
C548 [5.2D]
C549 [5.3C]
C550 [5.3B]
C551 [5.2C]
C552 [5.1B]
C553 [20.2F]
C554 [5.3C]
C555 [5.3B]
C556 [5.1D]
C557 [5.2B]
C558 [20.2G]
C559 [20.2G]
C560 [8.2A]
C561 [8.2B]

C562 [8.2A]
C563 [8.2B]
C564 [8.1B]
C565 [2.5C]
C566 [8.1A]
C567 [2.5C]
C568 [2.5C]
C569 [2.5C]
C570 [8.2C]
C571 [8.2A]
C572 [8.1A]
C573 [2.5C]
C574 [8.2B]
C575 [8.1B]
C576 [2.5C]
C577 [7.4H]
C578 [8.2D]
C579 [2.4C]
C580 [2.4C]
C581 [8.2C]
C582 [8.1C]
C583 [8.1C]
C584 [8.2C]
C585 [2.4C]
C586 [5.4E]
C587 [2.4C]
C588 [8.1D]
C589 [3.1D]
C590 [3.2E]
C591 [3.5D]
C592 [3.5D]
C593 [2.4C]
C594 [3.2D]
C595 [3.2D]
C596 [3.1E]
C597 [3.1D]
C598 [3.5C]
C599 [2.4C]
C600 [5.4E]
C601 [3.5D]
C602 [5.2E]
C603 [3.5A]
C604 [2.1F]
C605 [5.2F]
C606 [2.4C]
C607 [8.2C]
C608 [5.2F]
C609 [2.1F]
C610 [5.2F]
C611 [5.2F]
C612 [2.4C]
C613 [2.1E]
C614 [3.1E]
C615 [2.1F]
C616 [8.2D]
C617 [5.1E]
C618 [5.2F]
C619 [8.2D]
C620 [8.1D]
C621 [2.4C]
C622 [2.1F]
C623 [5.1F]
C624 [5.2G]
C625 [2.4C]
C626 [2.2E]
C627 [5.2F]
C628 [8.4A]
C629 [3.1E]
C630 [3.2D]
C631 [5.2F]
C632 [2.1F]
C633 [5.2F]
C634 [2.1F]
C635 [2.1F]
C636 [2.1E]
C637 [2.3C]
C638 [5.1F]
C639 [3.1E]
C640 [5.2F]
C641 [2.4E]
C642 [2.3C]
C643 [2.1F]
C644 [5.1F]
C645 [3.1D]
C646 [5.2E]
C647 [5.2F]
C648 [3.1D]
C649 [5.2F]
C650 [5.2F]
C651 [9.3B]
C652 [9.3B]
C653 [2.4E]
C654 [2.3F]
C655 [5.2E]
C656 [5.4F]
C657 [16.3B]

C658 [11.3B]
C659 [2.3F]
C660 [15.3B]
C661 [12.2B]
C662 [3.2D]
C663 [11.3B]
C664 [2.3C]
C665 [2.3C]
C666 [2.4F]
C667 [12.2B]
C668 [2.2F]
C669 [12.4B]
C670 [16.3B]
C671 [11.3B]
C672 [11.3B]
C673 [2.2F]
C674 [2.4F]
C675 [8.3B]
C676 [8.3B]
C677 [2.2F]
C678 [8.4B]
C679 [10.3B]
C680 [17.3B]
C681 [11.3B]
C682 [2.3C]
C683 [2.3C]
C684 [11.3B]
C685 [2.2G]
C686 [8.3A]
C687 [10.3B]
C688 [11.3B]
C689 [9.3A]
C690 [16.3B]
C691 [5.4F]
C692 [12.4A]
C693 [2.3C]
C694 [8.4A]
C695 [9.3A]
C696 [12.2A]
C697 [10.3A]
C698 [9.3A]
C699 [2.3C]
C700 [12.4A]
C701 [8.3B]
C702 [8.3A]
C703 [8.3A]
C704 [11.3A]
C705 [2.3C]
C706 [8.3D]
C707 [16.3B]
C708 [10.3A]
C709 [11.3A]
C710 [2.3C]
C711 [3.5D]
C712 [7.4G]
C713 [5.5B]
C714 [12.2A]
C715 [19.2C]
C716 [19.2G]
C717 [8.4C]
C718 [19.2F]
C719 [2.2C]
C720 [2.2C]
C721 [8.3D]
C722 [8.3C]
C723 [8.3C]
C724 [8.4G]
C725 [8.3B]
C726 [17.2C]
C728 [8.3D]
C729 [2.2C]
C730 [2.2C]
C731 [8.4C]
C732 [5.4E]
C733 [18.3F]
C734 [19.2F]
C735 [8.3C]
C736 [8.3C]
C737 [2.2C]
C738 [8.3D]
C739 [8.3D]
C740 [8.3D]
C742 [2.2C]
C743 [21.2A]
C744 [21.2F]
C746 [21.2F]
C748 [21.1F]
C750 [21.2E]
C752 [21.2C]
C755 [2.1A]
C757 [21.2C]
C758 [21.3E]
C759 [21.3F]
C760 [21.4F]
C761 [21.3F]
C762 [21.2B]

C763 [9.2E]
C764 [10.3E]
C765 [10.4E]
C766 [10.4E]
C767 [12.4B]
C768 [9.4F]
C769 [10.4F]
C770 [10.4F]
C771 [10.3F]
C772 [9.5F]
C773 [9.3F]
C774 [9.5F]
C775 [9.4F]
C776 [9.3F]
CN1 [2.3B]
D1 [12.4E]
D2 [9.2E]
D3 [9.1E]
D4 [10.2E]
D5 [10.1E]
D6 [12.2E]
D7 [9.3F]
D8 [10.2F]
D9 [10.3F]
D10 [9.2F]
D11 [11.4E]
D12 [12.2E]
D13 [17.4F]
D14 [19.4B]
D15 [17.3F]
D16 [18.5G]
D501 [20.3F]
D502 [17.2E]
D503 [17.2F]
D508 [10.3E]
D509 [10.5E]
D510 [10.4E]
D511 [9.4E]
D512 [9.5E]
D513 [9.4E]
F1 [19.4C]
G1 [2.3D]
G1 [3.3C]
G1 [5.4H]
G1 [8.3C]
G1 [8.3G]
G1 [9.3C]
G1 [10.3C]
G1 [11.3C]
G1 [12.4B]
G1 [13.3D]
G1 [14.3D]
G1 [15.2C 15.4C]
G1 [16.3C]
G1 [17.3C]
G1 [18.4C]
J1 [10.5G]
J2 [12.3H]
J3 [11.3D]
J4 [10.4D]
J5 [17.4H]
J6 [17.3H]
J7 [17.5B]
L1 [9.2G]
L2 [9.3G]
L3 [10.3G]
L4 [10.2C]
L5 [21.2G]
L7 [17.4F]
L8 [21.4G]
L10 [20.2G]
L11 [20.2G]
LS01 [10.4E]
LS02 [10.4F]
LS03 [10.3E]
LS04 [9.4F]
LS05 [9.4F]
LS06 [9.3F]
LB1 [12.4F]
LB2 [9.2G]
LB3 [9.1G]
LB4 [11.4F]
LB5 [10.1F]
LB6 [10.1F]
LBS01 [3.5D]
LBS02 [11.3A]
LBS03 [2.4F]
LBS04 [9.2A]
LBS05 [11.3A]
LBS06 [16.3A]
LBS07 [12.2A]
LBS08 [10.2A]
LBS09 [12.3A]
M1 [7.2D 7.4B 7.4C]
M2 [7.4B 7.4C 7.2B]
M3 [7.2F 7.4D 7.4E]
M4 [7.4E 7.4D 7.2H]
M5 [4.4C 4.4B 4.2D]
M6 [4.2B 4.4B 4.4C]
M7 [4.2H 4.4E 4.4D]
M8 [4.2F 4.4E 4.4D]
MEC1 [16.2F]
MEC2 [16.2F]
MEC3 [16.3E]
MEC4 [16.2E]
MEC5 [16.2E]
MEC6 [16.3G]
Q1 [12.4D]
Q2 [12.1E]
Q3 [12.2E]
Q4 [11.4D]
Q5 [20.2B]
Q6 [21.4F]
Q7 [21.4F]
Q8 [17.4F]
Q9 [21.2F]
Q10 [21.2F]
Q11 [19.4G]
Q12 [19.4F]
Q13 [17.2E]
Q14 [20.2E]
Q15 [20.3E]
Q16 [20.4F]
Q17 [20.4B]
Q18 [20.4C]
Q19 [21.4B]
Q20 [17.1E]
Q502 [17.2F]
Q503 [21.2B]
Q504 [21.2B]
Q505 [21.3B]
Q507 [21.2B]
Q508 [12.4A]
R1 [12.4D]
R2 [12.4F]
R3 [12.4E]
R4 [9.1F]
R5 [12.2F]
R6 [9.2E]
R7 [10.1E]
R8 [9.1E]
R9 [9.1F]
R10 [11.4E]
R11 [10.1F]
R12 [10.1E]
R13 [10.1F]
R14 [12.2D]
R15 [12.1D]
R16 [11.4D]
R17 [12.2F]
R18 [11.4D]
R19 [12.2D]
R20 [12.2D]
R21 [19.4B]
R22 [19.4B]
R23 [19.4A]
R24 [17.4G]
R25 [17.4F]
R26 [2.1B]
R27 [2.1C]
R28 [17.4C]
R29 [18.4E]
R30 [18.4E]
R31 [18.5E]
R32 [18.5F]
R33 [17.5C]
R34 [2.2C]
R35 [17.3G]
R36 [17.2E]
R37 [17.3G]
R38 [17.2E]
R39 [17.4C]
R40 [17.4B]
R41 [17.1E]
R42 [19.4F]
R43 [17.5C]
R44 [19.4G]
R45 [19.2C]
R46 [19.2C]
R47 [19.2C]
R48 [17.2D]
R49 [17.2C]
R50 [18.4D]
R51 [17.3E]

R52 [17.4E]
R53 [13.3C]
R54 [15.5D]
R55 [10.3B]
R56 [8.4H]
R57 [2.1C]
R58 [8.4H]
R59 [8.4H]
R60 [7.3A]
R61 [8.4H]
R62 [20.2F]
R63 [20.4B]
R64 [20.4B]
R65 [20.2E]
R66 [20.4E]
R67 [20.4E]
R68 [20.4E]
R69 [20.4F]
R70 [20.4F]
R71 [20.4G]
R72 [3.4H]
R73 [3.4H]
R74 [20.3G]
R75 [20.3D]
R76 [3.4H]
R77 [3.4H]
R78 [4.3A]
R79 [21.4A]
R80 [21.4A]
R81 [21.4B]
R82 [21.1B]
R83 [15.1B]
R84 [15.3D]
R85 [21.4C]
R86 [21.4C]
R101 [20.4B]
R167 [21.1E]
R168 [21.3A]
R169 [21.3A]
R170 [21.4A]
R171 [21.3A]
R172 [21.3B]
R173 [21.3B]
R174 [21.2C]
R175 [21.3C]
R176 [21.3C]
R177 [21.3C]
R178 [21.2C]
R179 [21.2C]
R180 [21.2C]
R181 [21.3C]
R182 [21.3C]
R183 [21.4D]
R184 [21.3D]
R185 [21.4D]
R186 [21.4D]
R187 [21.3E]
R189 [21.3E]
R190 [21.1E]
R191 [21.1E]
R194 [17.1E]
R195 [17.2E]
R196 [17.2E]
R197 [21.2B]
R199 [21.3C]
R200 [21.4D]
R201 [21.4E]
R202 [21.4E]
R203 [21.2C]
R501 [20.2D]
R502 [20.2D]
R503 [20.3C]
R504 [20.3C]
R505 [20.3B]
R506 [20.3B]
R507 [4.3A]
R508 [4.3G]
R509 [20.2D]
R510 [4.3C]
R511 [4.4H]
R512 [4.4H]
R513 [4.4G]
R514 [4.4G]
R515 [4.2A]
R516 [4.2E]
R517 [4.3E]
R518 [7.3G]
R519 [7.2E]
R520 [7.4H]
R521 [7.4H]
R522 [2.5F]
R523 [3.4D]
R524 [3.5A]
R525 [6.5D]
R526 [3.5A]
R527 [7.3E]

R528 [6.5D]
R529 [6.5D]
R530 [2.5F]
R531 [6.4D]
R532 [2.2C]
R533 [9.3D]
R534 [9.4D]
R535 [9.5D]
R536 [9.3B]
R537 [13.3C]
R538 [18.4B]
R539 [11.3B]
R540 [12.3B]
R541 [18.2B]
R542 [18.4B]
R543 [18.2C]
R544 [14.3C]
R545 [10.3D]
R546 [18.2B]
R547 [10.4D]
R548 [18.2B]
R549 [10.5D]
R550 [18.2C]
R551 [18.2B]
R552 [14.3C]
R553 [16.3D]
R554 [7.3A]
R555 [17.3D]
R556 [17.3D]
R557 [17.2C]
R558 [16.3C]
R559 [7.4G]
R560 [18.2D]
R561 [7.4G]
R562 [18.3F]
R563 [18.2D]
R565 [19.2F]
R566 [19.2F]
R567 [18.2D]
R568 [19.2F]
R569 [17.3E]
R570 [18.2D]
R572 [17.3E]
R573 [18.2E]
R574 [18.2E]
R580 [7.3C]
R581 [7.2A]
R582 [21.2B]
R583 [21.2A]
R584 [21.2C]
R589 [21.2E]
R590 [21.2F]
R591 [2.1C]
R595 [21.2D]
R596 [2.1C]
R597 [2.1C]
R599 [2.1B]
R603 [2.1C]
R604 [21.2C]
R605 [21.4D]
R610 [21.3F]
R611 [21.2B]
R612 [21.3E]
R614 [10.3D]
R615 [10.5D]
R616 [10.4D]
R617 [9.4E]
R618 [9.2E]
R619 [9.5E]
R620 [9.3E]
R621 [9.3E]
R622 [12.4A]
R623 [10.2E]
R624 [12.4B]
R625 [12.4B]
R626 [12.4B]
R627 [12.4B]
R628 [12.4B]
R629 [12.4B]
R630 [12.4B]
R631 [12.4B]
R632 [10.3E]
RP1 [6.1H 6.1H 6.1H 6.1H]
RP2 [6.2G 6.2G 6.2G 6.2G]
RP3 [6.2G 6.3G 6.2G 6.3G]
RP4 [6.3H 6.3H 6.3H 6.3H]
RP5 [6.1G 6.1G 6.1G 6.1G]
RP6 [6.3G 6.3G 6.3G 6.3G]
RP7 [6.4G 6.4G 6.4G 6.4G]

RP8 [6.4H 6.4H 6.4H 6.4H]
RP9 [6.3H 6.3H 6.2H 6.2H]
RP10 [6.2H 6.2H 6.2H 6.2H]
RP11 [6.4G 6.4G 6.4G 6.4G]
RP12 [3.4H 3.4H 3.4H 3.4H]
RP13 [3.2G 3.2G 3.2G 3.2G]
RP14 [3.3G 3.3G 3.3G 3.3G]
RP15 [3.4G 3.4G 3.4G 3.4G]
RP16 [3.2H 3.2H 3.2H 3.2H]
RP17 [3.3H 3.3H 3.3H 3.3H]
RP18 [3.1G 3.1G 3.1G 3.1G]
RP19 [3.3G 3.3G 3.2G 3.2G]
RP20 [3.4G 3.4G 3.4G 3.4G]
RP21 [3.1H 3.1H 3.1H 3.1H]
RP22 [3.3H 3.3H 3.2H 3.2H]
U1 [12.2E]
U2 [19.4B]
U3 [18.5F]
U4 [18.4F]
U5 [19.2B]
U6 [21.3D]
US01 [20.3D]
US02 [17.2B]
US03 [18.3F]
US04 [19.2F]
US06 [9.2D 9.3D]
US06 [10.2D 10.3D]
Y1 [16.3C]

NVIDIA - CONFIDENTIAL
羅鏡林
20090127

| | |
|---|---|
| ASSEMBLY | BASE LEVEL GENERIC SCHEMATIC ONLY, COMMON & NO_STUFF ASSEMBLY NOTES AND BOM NOT FINAL |
| PAGE DETAIL | <edit here to insert page detail> |

ALL NVIDIA DESIGN SPECIFICATIONS, REFERENCE SPECIFICATIONS, REFERENCE BOARDS, FILES, DRAWINGS, DIAGNOSTICS, LISTS AND OTHER DOCUMENTS OR INFORMATION (TOGETHER AND SEPARATELY, 'MATERIALS') ARE BEING PROVIDED 'AS IS'. THE MATERIALS MAY CONTAIN KNOWN AND UNKNOWN VIOLATIONS OR DEVIATIONS OF INDUSTRY STANDARDS AND SPECIFICATIONS. NVIDIA MAKES NO WARRANTIES, EXPRESSED, IMPLIED, STATUTORY OR OTHERWISE WITH RESPECT TO THE MATERIALS OR OTHERWISE, AND EXPRESSLY DISCLAIMS ALL IMPLIED WARRANTIES INCLUDING, WITHOUT LIMITATION, THE WARRANTIES OF DESIGN, OF NONINFRINGEMENT, MERCHANTABILITY OR FITNESS FOR A PARTICULAR PURPOSE, OR ARISING FROM A COURSE OF DEALING, TRADE USAGE, TRADE PRACTICE, OR INDUSTRY STANDARDS.

NVIDIA CORPORATION
2701 SAN TOMAS EXPRESSWAY
SANTA CLARA, CA 95050, USA

| | | | |
|---|---|---|---|
| NV_PN | 600-10681-base-100 A | | |
| ID | | PAGE | |
| NAME | <ENGINEER> | DATE | 05-FEB-2009 |

# XTAL, MECHANICALS, THERMALS

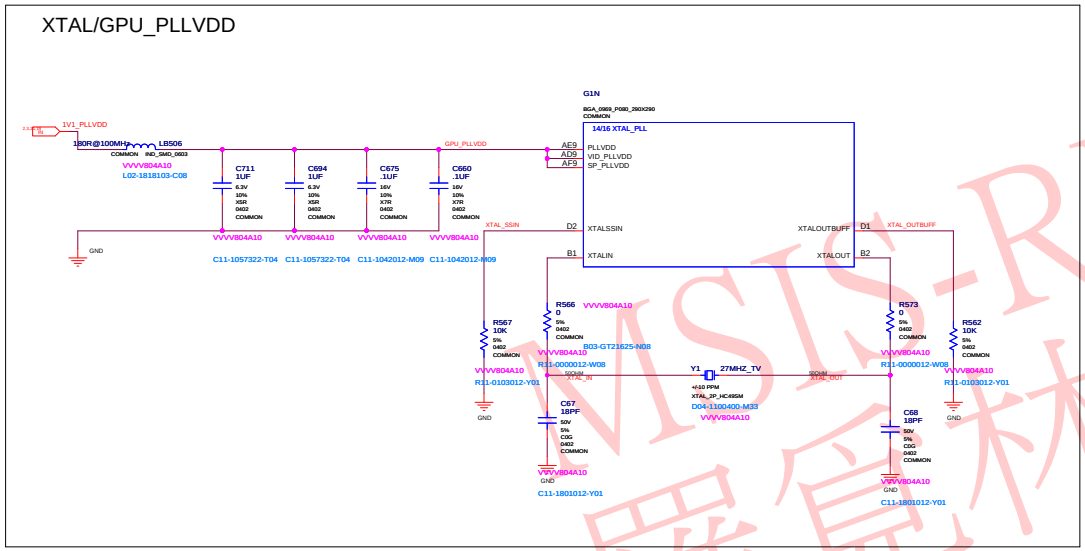


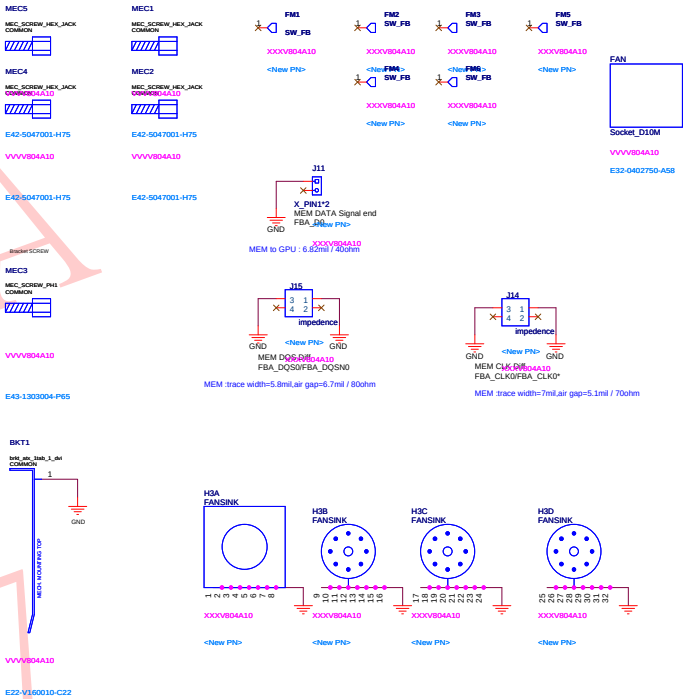


MSI-RMA 羅宮林 20091027