PCI-EXPRESS EDGE CONNECTOR

REDWOOD
ROGUE

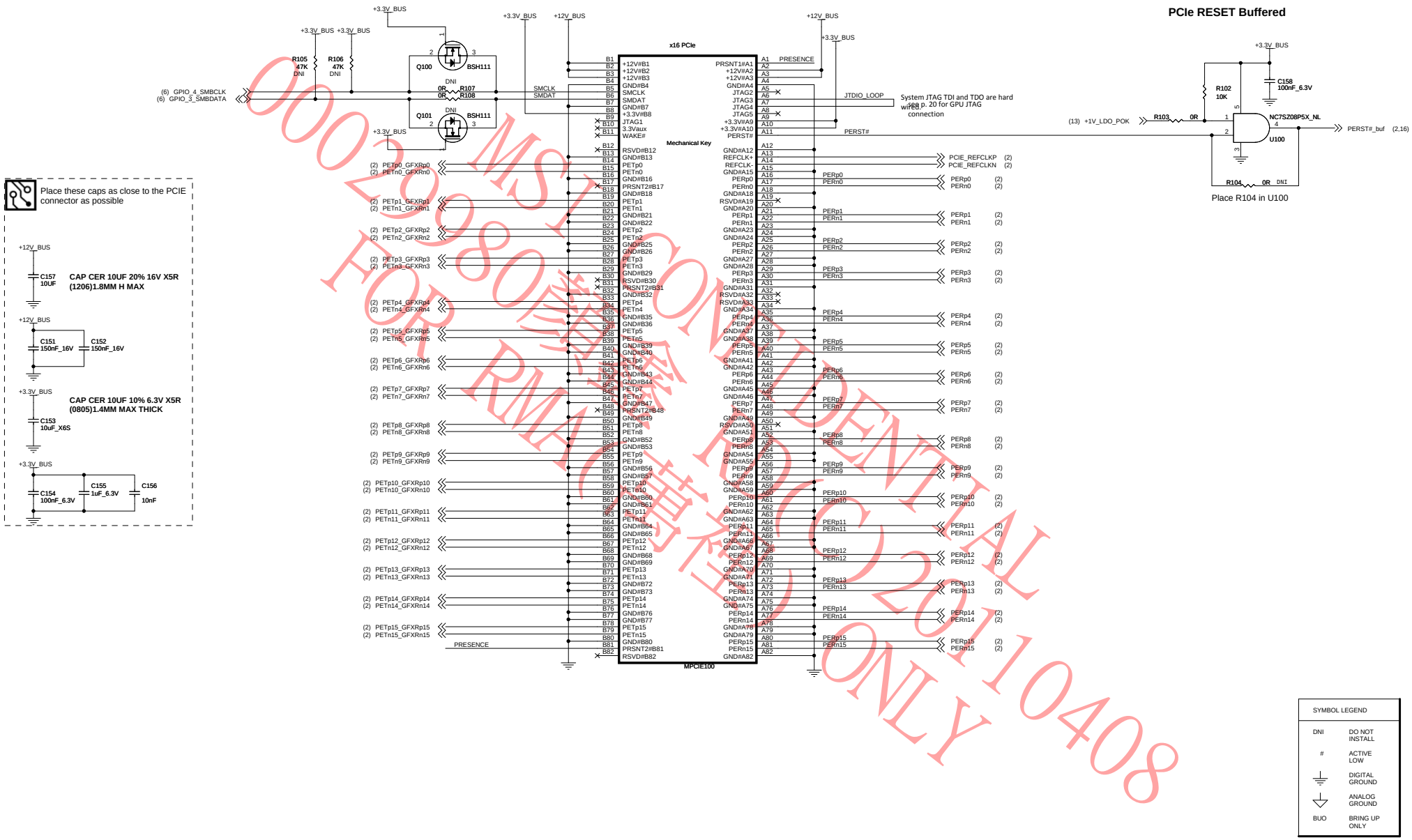

MSI CONFIDENTIAL
0002908 RD(C)20110408
FOR RMA(華碩) ONLY

CONFIDENTIAL & PROPRIETARY TO ADVANCED MICRO DEVICES INC.
© 2007 Advanced Micro Devices
This AMD Board schematic and design is the exclusive property of AMD, and is provided only to entities under a non-disclosure agreement with AMD for evaluation purposes. Further distribution or disclosure is strictly prohibited. Use of this schematic and design for any purpose other than evaluation requires a Board Technology License Agreement with AMD. AMD makes no representations or warranties of any kind regarding this schematic and design, including, not limited to, any implied warranty of merchantibility or fitness for a particular purpose, and disclaims responsibility forany consequences resulting from use of the information included herein.

Advanced Micro Devices Inc.
1 Commerce Valley Drive East
Markham, Ontario

AMD

Date: Monday, December 20, 2010 | Rev P01

Sheet 1 of 19

Title TURKS DDR3 1GB rVGA+HDMI/DP+DVI LP | Doc No. 105-C331xx-00

(2) TURKS PCIe Interface

NOTE: Some of the PCIE testpoints will be available through vias on traces.

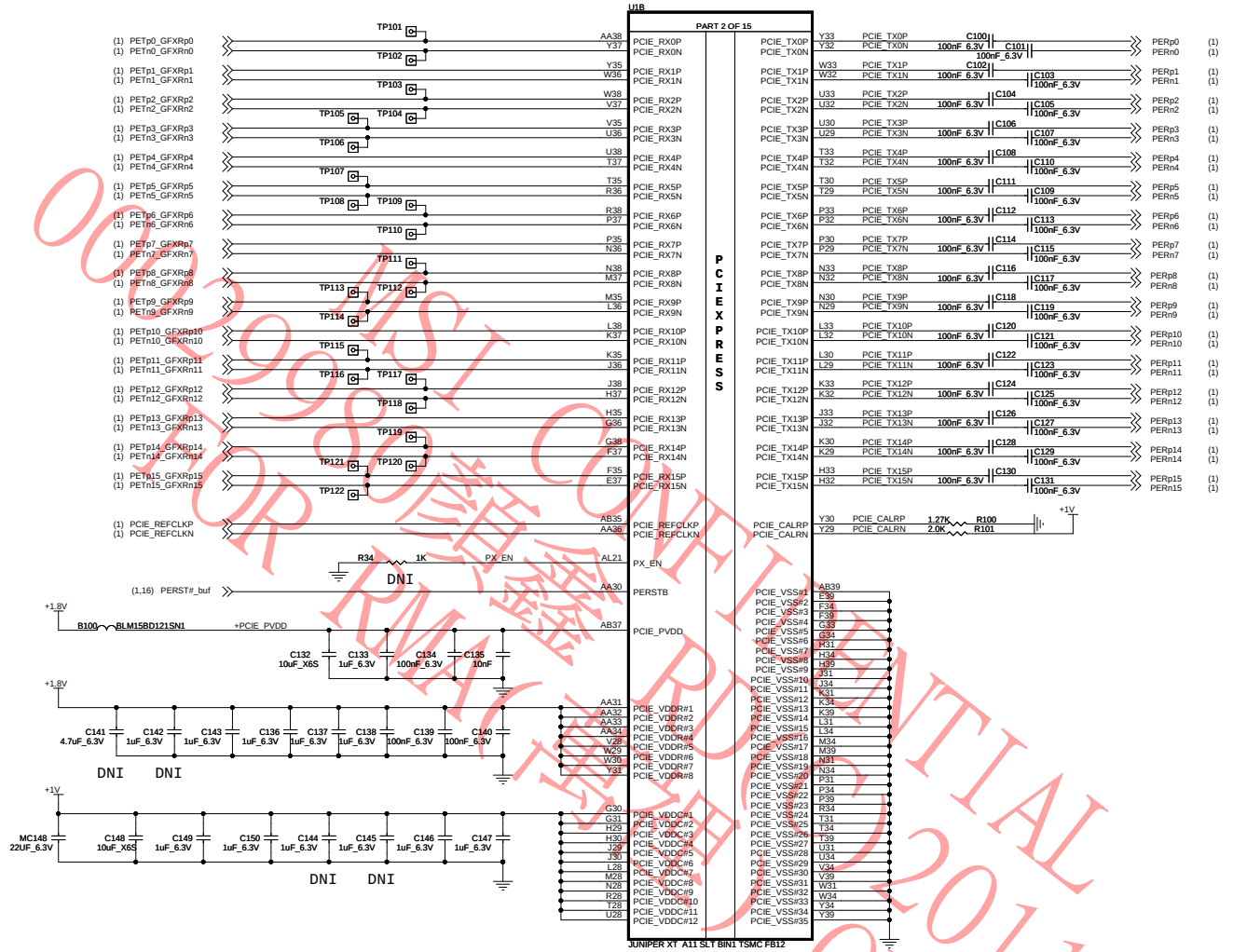

0020998 MSI 微星 CONFIDENTIAL 20110408
FOR RMA 專用 RD ONLY

CONFIDENTIAL & PROPRIETARY TO ADVANCED MICRO DEVICES INC.
© 2007 Advanced Micro Devices
This AMD Board schematic and design is the exclusive property of AMD, and is provided only to entities under a non-disclosure agreement with AMD for evaluation purposes. Further distribution or disclosure is strictly prohibited. Use of this schematic and design for any purpose other than evaluation requires a Board Technology License Agreement with AMD. AMD makes no representations or warranties of any kind regarding this schematic and design, including, not limited to, any implied warranty of merchantability or fitness for a particular purpose, and disclaims responsibility forany consequences resulting from use of the information included herein.

Advanced Micro Devices Inc.
1 Commerce Valley Drive East
Markham, Ontario

Date:	Monday, December 20, 2010
Rev	P01
Sheet	2 of 19
Title	TURKS DDR3 1GB rVGA+HDMI/DP+DVI LP
Doc No.	105-C331xx-00

(3) TURKS MEM Interface Ch A&B

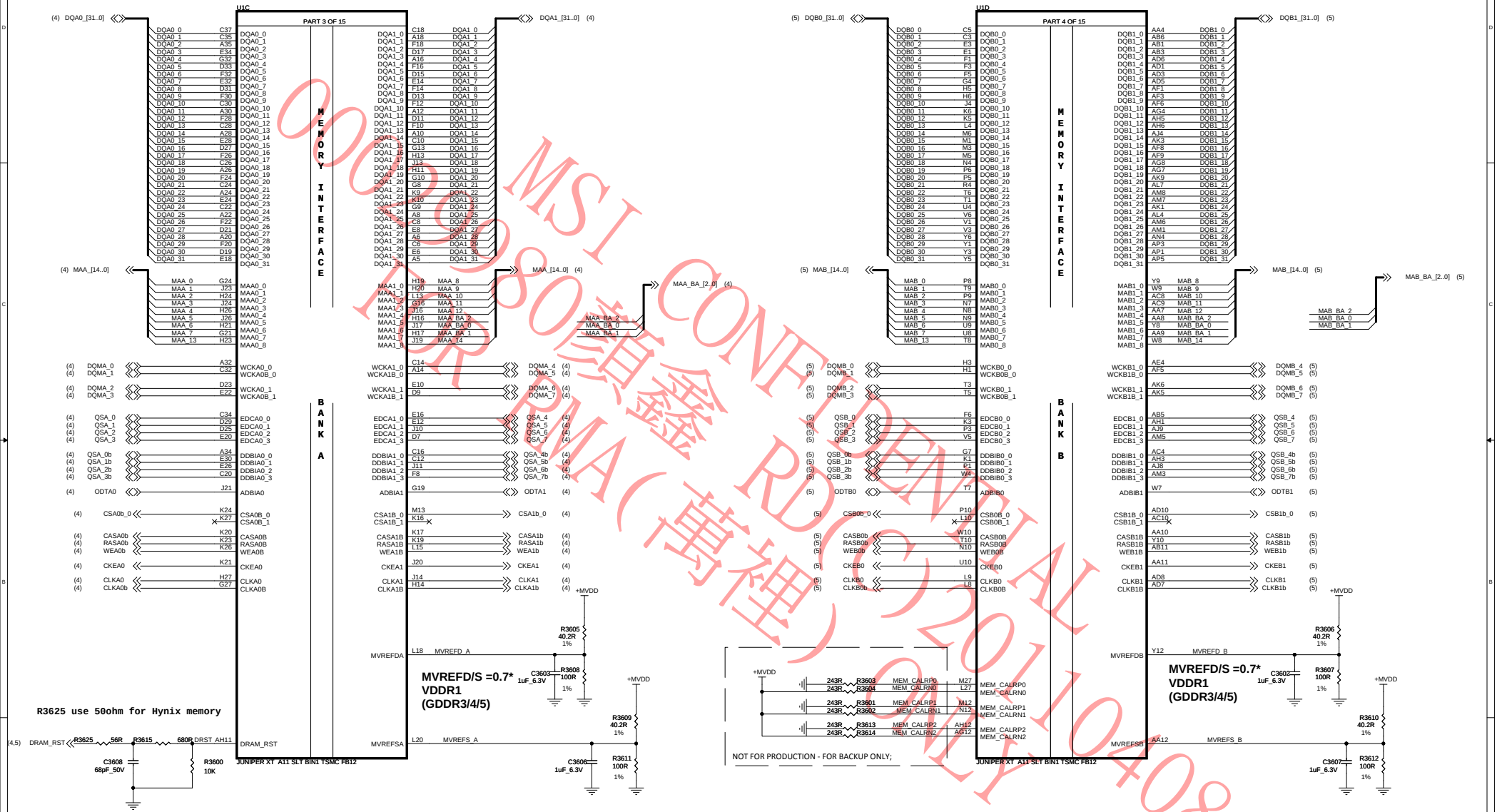

MSI CONFIDENTIAL
00080980 鎮鑫 RD(C)20110408
FOR RMA(萬裡) ONLY

CONFIDENTIAL & PROPRIETARY TO ADVANCED MICRO DEVICES INC.
© 2007 Advanced Micro Devices
This AMD Board schematic and design is the exclusive property of AMD, and is provided only to entities under a non-disclosure agreement with AMD for evaluation purposes. Further distribution or disclosure is strictly prohibited. Use of this schematic and design for any purpose other than evaluation requires a Board Technology License Agreement with AMD. AMD makes no representations or warranties of any kind regarding this schematic and design, including, not limited to, any implied warranty of merchantibility or fitness for a particular purpose, and disclaims responsibility forany consequences resulting from use of the information included herein.

Advanced Micro Devices Inc.
1 Commerce Valley Drive East
Markham, Ontario

AMD

Date: Monday, December 20, 2010 | Rev P01

Sheet 3 of 19

Title TURKS DDR3 1GB rVGA+HDMI/DP+DVI LP | Doc No. 105-C331xx-00

(4) DDR3 Memory Channel A

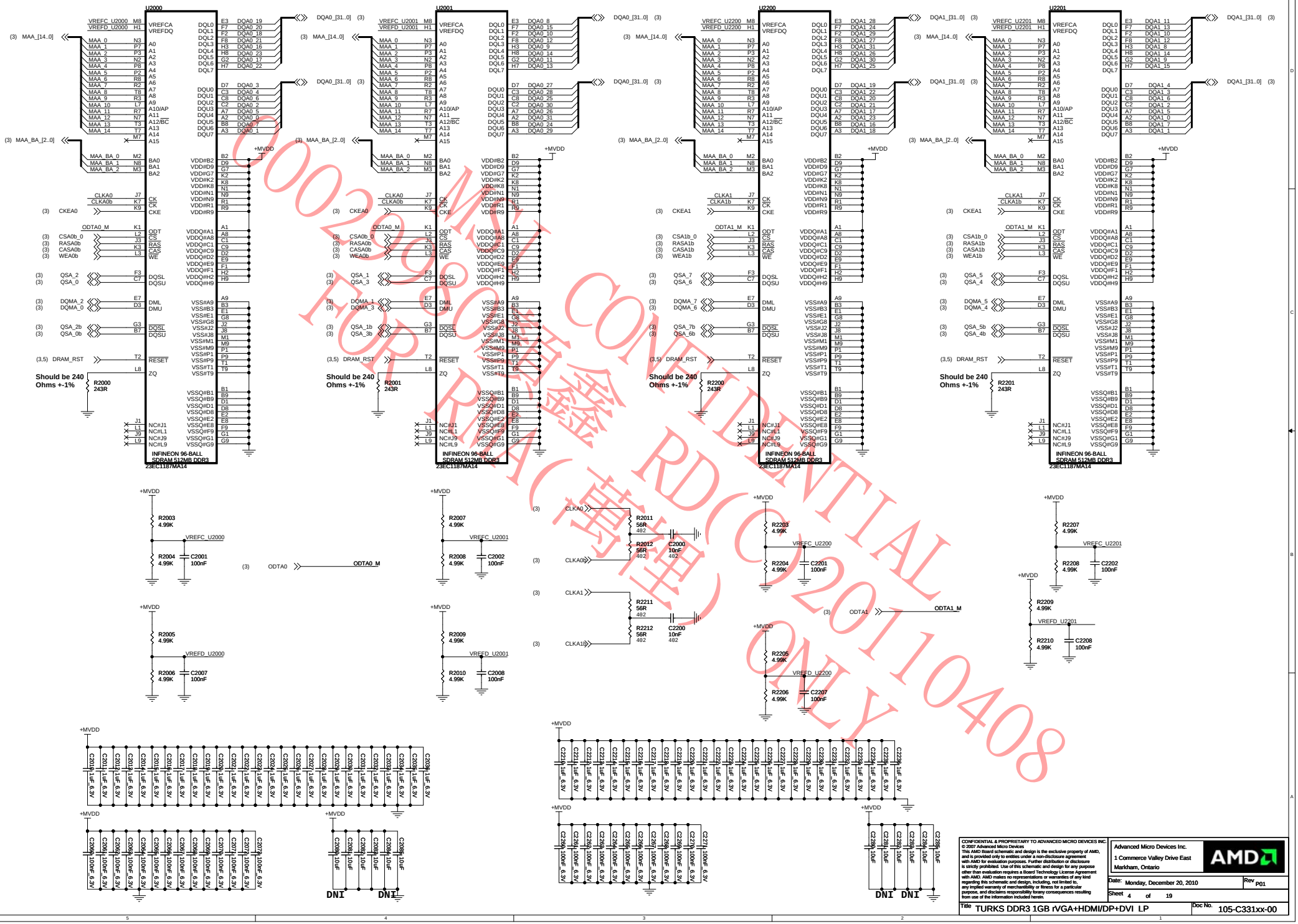

CONFIDENTIAL
FOR RMA(專理) ONLY
00029080 雍鑫 RD(C)20110408

CONFIDENTIAL & PROPRIETARY TO ADVANCED MICRO DEVICES INC.
© 2007 Advanced Micro Devices
This AMD Board schematic and design is the exclusive property of AMD, and is provided only to entities under a non-disclosure agreement with AMD for evaluation purposes. Further distribution or disclosure is strictly prohibited. Use of this schematic and design for any purpose other than evaluation requires a Board Technology License Agreement with AMD. AMD makes no representations or warranties of any kind regarding this schematic and design, including, not limited to, any implied warranty of merchantability or fitness for a particular purpose, and disclaims responsibility forany consequences resulting from use of the information included herein.

Advanced Micro Devices Inc.
1 Commerce Valley Drive East
Markham, Ontario

AMD

Date: Monday, December 20, 2010 | Rev P01

Sheet 4 of 19

Title TURKS DDR3 1GB rVGA+HDMI/DP+DVI LP | Doc No. 105-C331xx-00

(5) DDR3 Memory Channel B

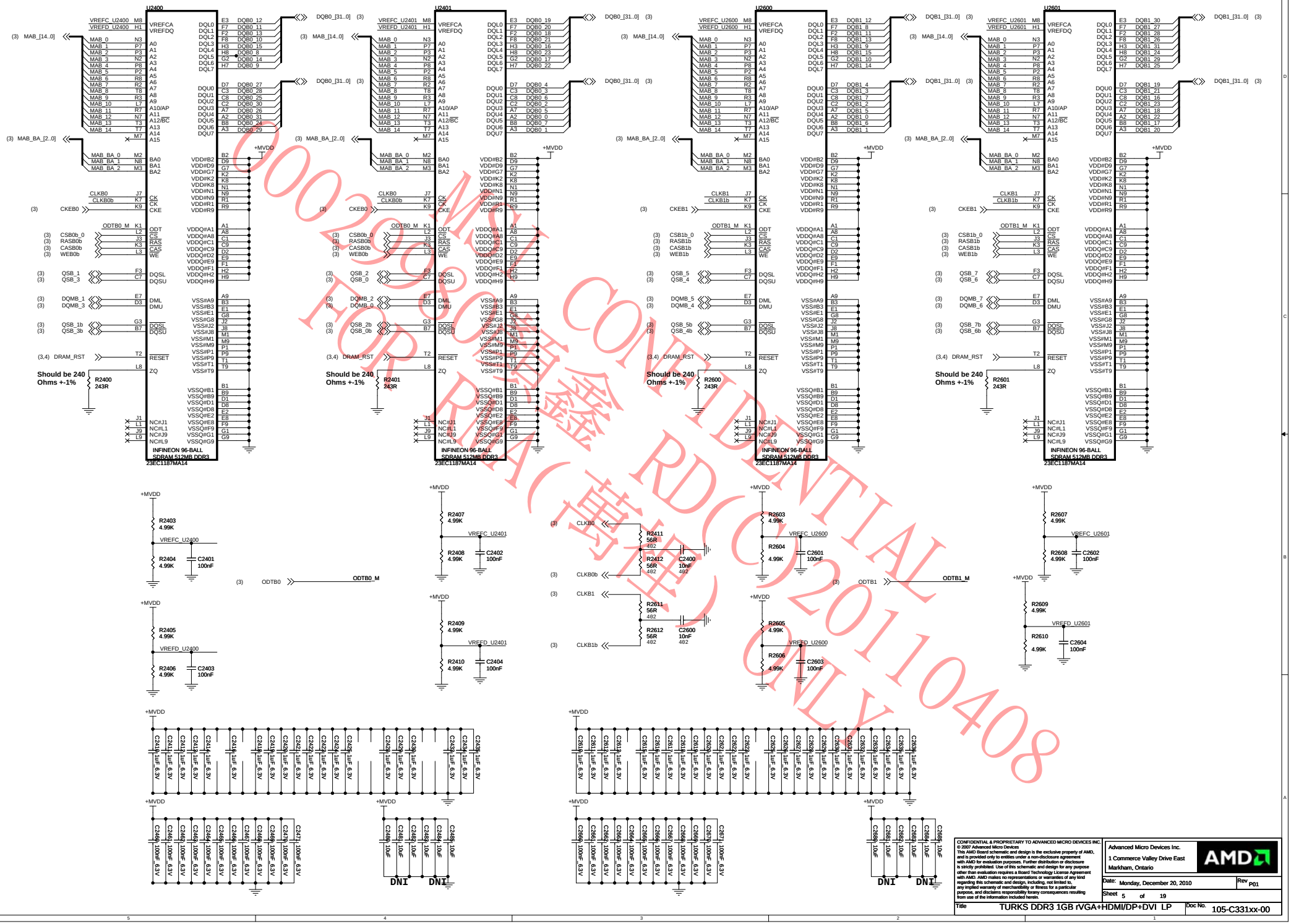

CONFIDENTIAL
0002908 鄭鑫 RD(C)20110408
FOR RDA(專用) ONLY

CONFIDENTIAL & PROPRIETARY TO ADVANCED MICRO DEVICES INC.
© 2007 Advanced Micro Devices
This AMD Board schematic and design is the exclusive property of AMD, and is provided only to entities under a non-disclosure agreement with AMD for evaluation purposes. Further distribution or disclosure is strictly prohibited. Use of this schematic and design for any purpose other than evaluation requires a Board Technology License Agreement with AMD. AMD makes no representations or warranties of any kind regarding this schematic and design, including, not limited to, any implied warranty of merchantability or fitness for a particular purpose, and disclaims responsibility forany consequences resulting from use of the information included herein.

Advanced Micro Devices Inc.
1 Commerce Valley Drive East
Markham, Ontario

AMD

Date: Monday, December 20, 2010	Rev P01
Sheet 5 of 19	
Title TURKS DDR3 1GB rVGA+HDMI/DP+DVI LP	Doc No. 105-C331xx-00

(06) TURKS GPIOs Strap CF XTAL OSC

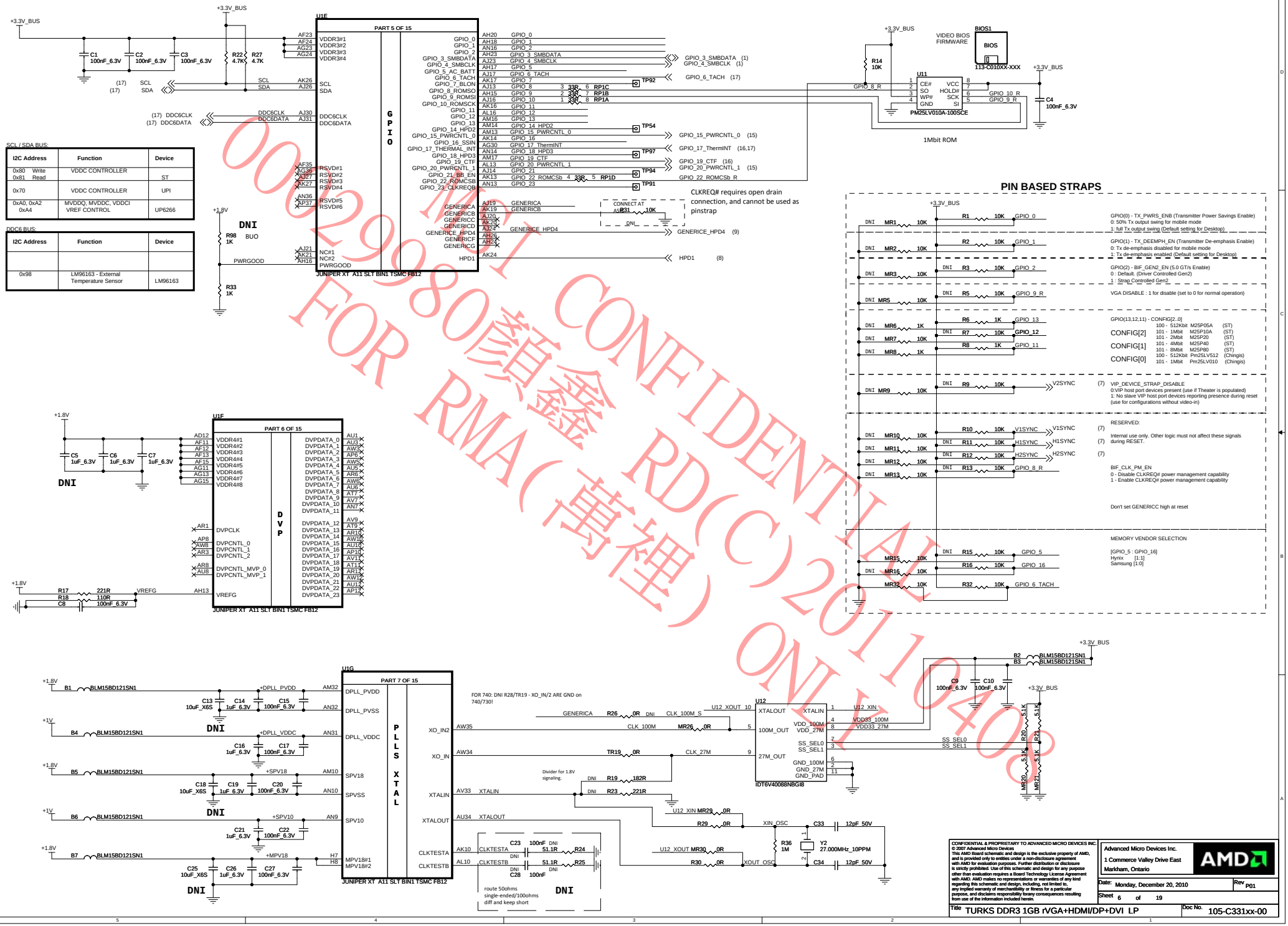

SCL / SDA BUS:

I2C Address	Function	Device
0x80 Write 0x81 Read	VDDC CONTROLLER	ST
0x70	VDDC CONTROLLER	UPI
0xA0, 0xA2 0xA4	MVDDQ, MVDDC, VDDCI VREF CONTROL	UP6266

DDC6 BUS:

I2C Address	Function	Device
0x98	LM96163 - External Temperature Sensor	LM96163

MCI CONFIDENTIAL
00029980 顏鑫 RD(C)20110408
FOR RMA(萬裡) ONLY

CONFIDENTIAL & PROPRIETARY TO ADVANCED MICRO DEVICES INC.
© 2007 Advanced Micro Devices
This AMD Board schematic and design is the exclusive property of AMD, and is provided only to entities under a non-disclosure agreement with AMD for evaluation purposes. Further distribution or disclosure is strictly prohibited. Use of this schematic and design for any purpose other than evaluation requires a Board Technology License Agreement with AMD. AMD makes no representations or warranties of any kind regarding this schematic and design, including, not limited to, any implied warranty of merchantibility or fitness for a particular purpose, and disclaims responsibility for any consequences resulting from use of the information included herein.

Advanced Micro Devices Inc.
1 Commerce Valley Drive East
Markham, Ontario

AMD

Date: Monday, December 20, 2010 | Rev P01

Sheet 6 of 19

Title TURKS DDR3 1GB rVGA+HDMI/DP+DVI LP | Doc No. 105-C331xx-00

(07) TURKS DAC1 and DAC2

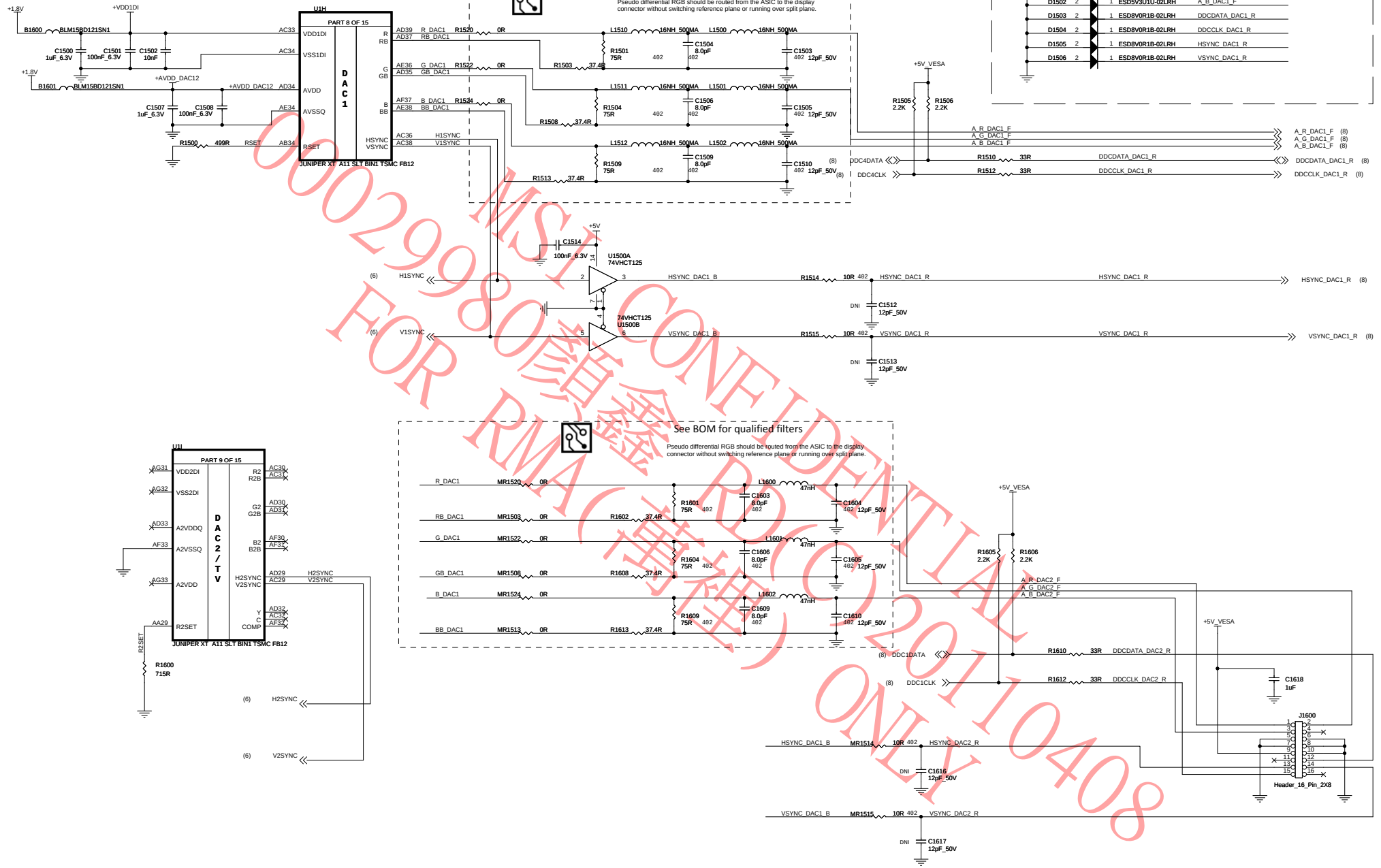

MSI CONFIDENTIAL
00029980 顏鑫 RD(C)20110408
FOR RMA(黃禮) ONLY

CONFIDENTIAL & PROPRIETARY TO ADVANCED MICRO DEVICES INC.
© 2007 Advanced Micro Devices
This AMD Board schematic and design is the exclusive property of AMD, and is provided only to entities under a non-disclosure agreement with AMD for evaluation purposes. Further distribution or disclosure is strictly prohibited. Use of this schematic and design for any purpose other than evaluation requires a Board Technology License Agreement with AMD. AMD makes no representations or warranties of any kind regarding this schematic and design, including, not limited to, any implied warranty of merchantibility or fitness for a particular purpose, and disclaims responsibility forany consequences resulting from use of the information included herein.

Advanced Micro Devices Inc.
1 Commerce Valley Drive East
Markham, Ontario

AMD

Date: Monday, December 20, 2010	Rev P01
Sheet 7 of 19	
Title TURKS DDR3 1GB rVGA+HDMI/DP+DVI LP	Doc No. 105-C331xx-00

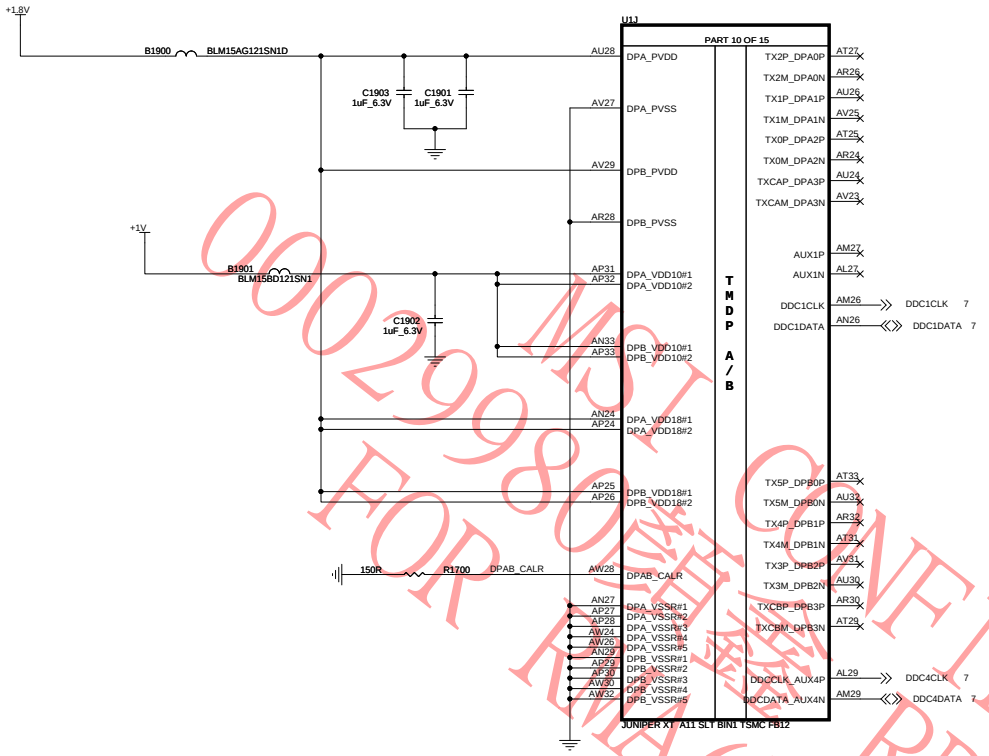

MSI CONFIDENTIAL
002998(版號) RD(C)20110408
FOR RMA(萬裡) ONLY

CONFIDENTIAL & PROPRIETARY TO ADVANCED MICRO DEVICES INC.
© 2007 Advanced Micro Devices
This AMD Board schematic and design is the exclusive property of AMD, and is provided only to entities under a non-disclosure agreement with AMD for evaluation purposes. Further distribution or disclosure is strictly prohibited. Use of this schematic and design for any purpose other than evaluation requires a Board Technology License Agreement with AMD. AMD makes no representations or warranties of any kind regarding this schematic and design, including, not limited to, any implied warranty of merchantibility or fitness for a particular purpose, and disclaims responsibility forany consequences resulting from use of the information included herein.

Advanced Micro Devices Inc.
1 Commerce Valley Drive East
Markham, Ontario

Date:	Monday, December 20, 2010
Rev	P01
Sheet	8 of 19
Title	TURKS DDR3 2GB rVGA+HDMI/DP+DVI-D/DVI-I
Doc No.	105-C331xx-00

(09) TURKS Display Port C & Display Port/HDMI D

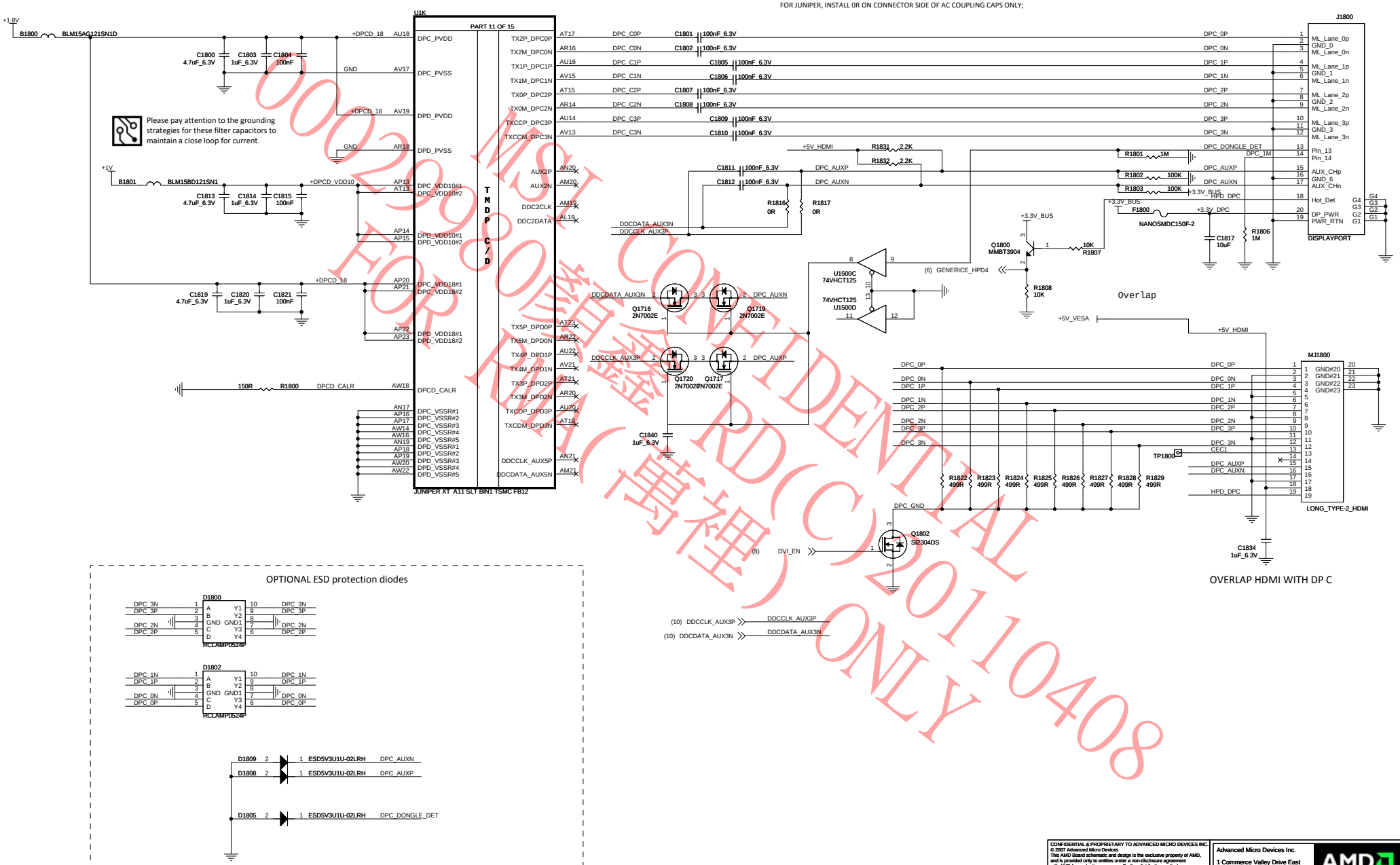

MSI CONFIDENTIAL
00029080 指鑑 RD(C)20110408
FOR RMA(萬裡) ONLY

CONFIDENTIAL & PROPRIETARY TO ADVANCED MICRO DEVICES INC.
© 2007 Advanced Micro Devices
This AMD Board schematic and design is the exclusive property of AMD, and is provided only to entities under a non-disclosure agreement with AMD for evaluation purposes. Further distribution or disclosure is strictly prohibited. Use of this schematic and design for any purpose other than evaluation requires a Board Technology License Agreement with AMD. AMD makes no representations or warranties of any kind regarding this schematic and design, including, not limited to, any implied warranty of merchantibility or fitness for a particular purpose, and disclaims responsibility forany consequences resulting from use of the information included herein.

Advanced Micro Devices Inc.
1 Commerce Valley Drive East
Markham, Ontario

AMD

Date: Monday, December 20, 2010 | Rev P01

Sheet 9 of 19

Title TURKS DDR3 1GB rVGA+HDMI/DP+DVI LP | Doc No. 105-C331xx-00

(10)Turks TMDP EF dDVI-I TOP

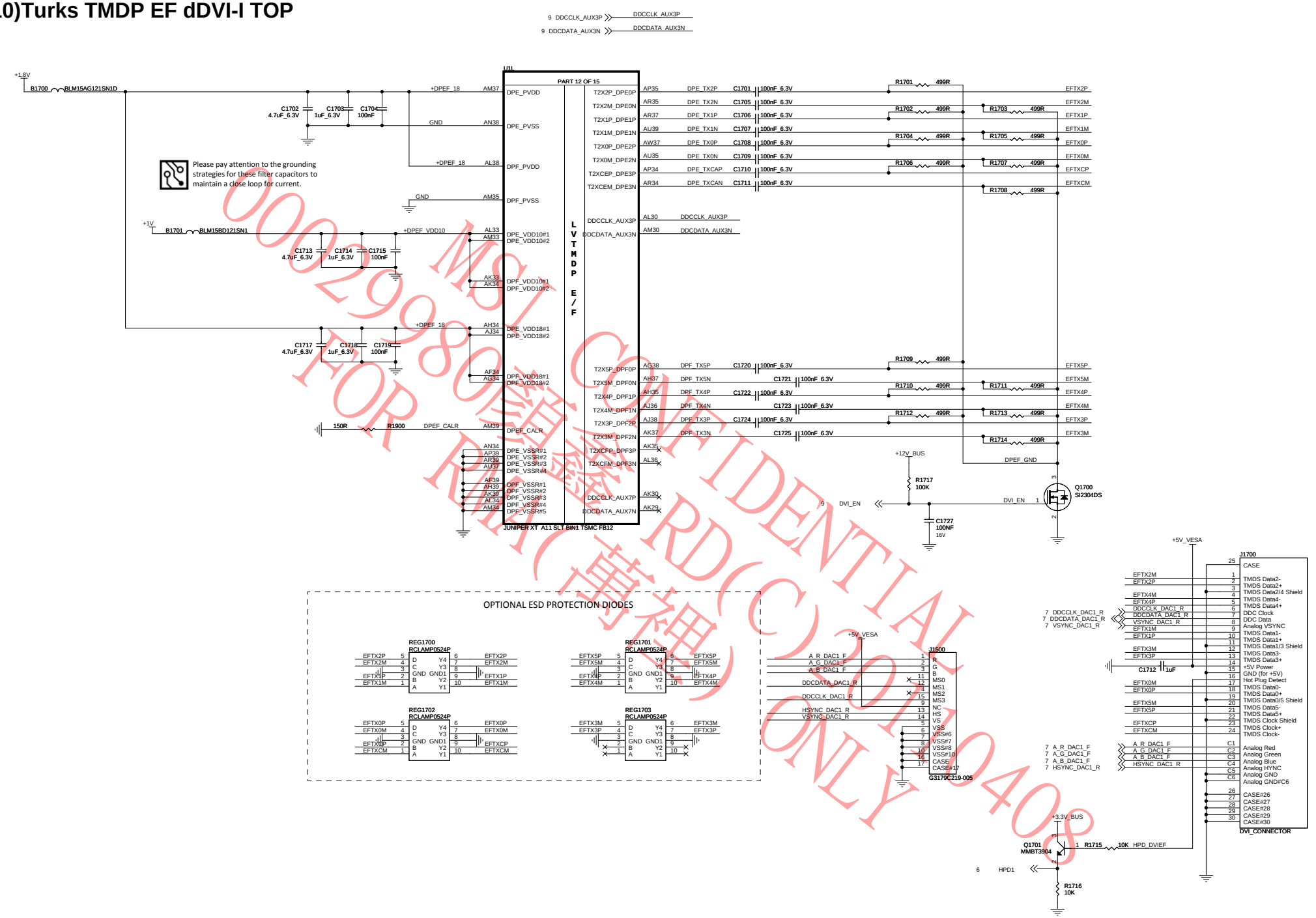

MSI CONFIDENTIAL
00029980 鎧鑫 RD(C) 20140408
FOR RMA(萬鍾) ONLY

CONFIDENTIAL & PROPRIETARY TO ADVANCED MICRO DEVICES INC.
© 2007 Advanced Micro Devices
This AMD Board schematic and design is the exclusive property of AMD, and is provided only to entities under a non-disclosure agreement with AMD for evaluation purposes. Further distribution or disclosure is strictly prohibited. Use of this schematic and design for any purpose other than evaluation requires a Board Technology License Agreement with AMD. AMD makes no representations or warranties of any kind regarding this schematic and design, including, not limited to, any implied warranty of merchantibility or fitness for a particular purpose, and disclaims responsibility forany consequences resulting from use of the information included herein.

Advanced Micro Devices Inc.
1 Commerce Valley Drive East
Markham, Ontario

AMD

Date: Monday, December 20, 2010 | Rev P01

Sheet 10 of 19

Title TURKS DDR3 2GB rVGA+HDMI/DP+DVI-D/DVI-I | Doc No. 105-C331xx-00

(11) TURKS Power & GND

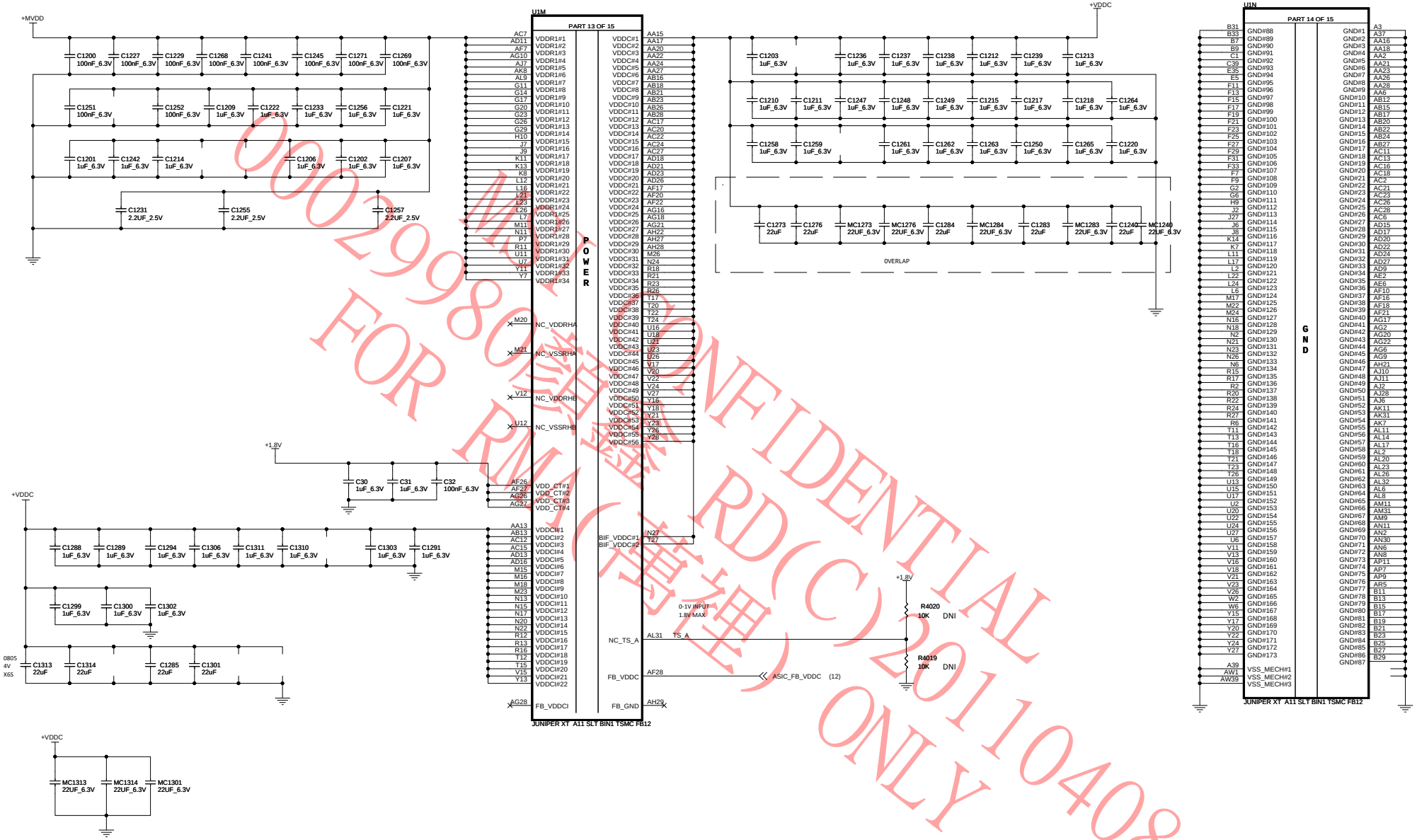

CONFIDENTIAL
RD(C)20110408
FOR RMA(萬裡) ONLY

CONFIDENTIAL & PROPRIETARY TO ADVANCED MICRO DEVICES INC.
© 2007 Advanced Micro Devices
This AMD Board schematic and design is the exclusive property of AMD, and is provided only to entities under a non-disclosure agreement with AMD for evaluation purposes. Further distribution or disclosure is strictly prohibited. Use of this schematic and design for any purpose other than evaluation requires a Board Technology License Agreement with AMD. AMD makes no representations or warranties of any kind regarding this schematic and design, including, not limited to, any implied warranty of merchantibility or fitness for a particular purpose, and disclaims responsibility for any consequences resulting from use of the information included herein.

Advanced Micro Devices Inc.
1 Commerce Valley Drive East
Markham, Ontario

AMD

Date: Monday, December 20, 2010 | Rev P01

Sheet 11 of 19

Title TURKS DDR3 1GB rVGA+HDMI/DP+DVI LP | Doc No. 105-C331xx-00

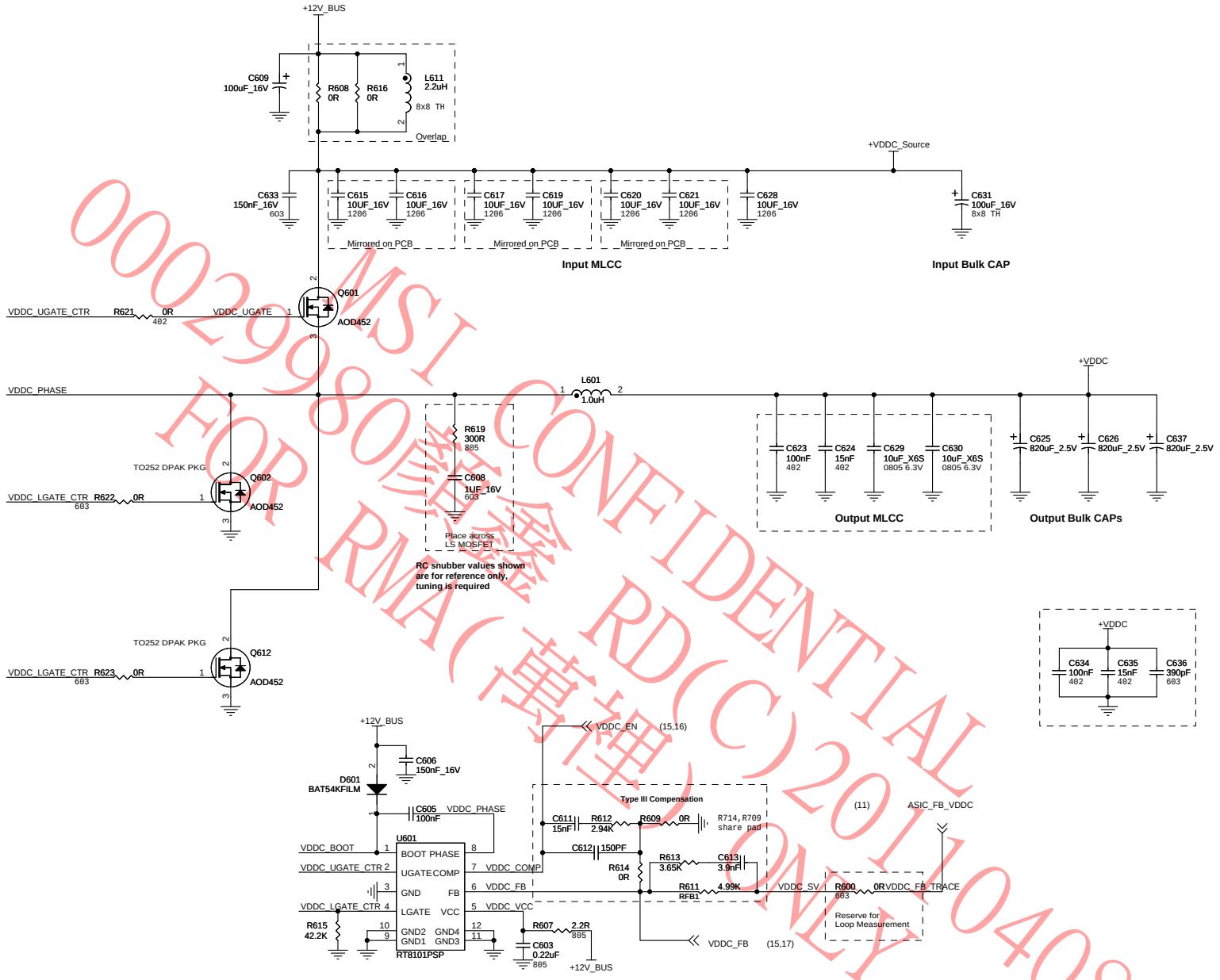

MSI CONFIDENTIAL
00029980 RD(C)20110408
FOR RMA(專裡) ONLY

CONFIDENTIAL & PROPRIETARY TO ADVANCED MICRO DEVICES INC.
© 2007 Advanced Micro Devices
This AMD Board schematic and design is the exclusive property of AMD, and is provided only to entities under a non-disclosure agreement with AMD for evaluation purposes. Further distribution or disclosure is strictly prohibited. Use of this schematic and design for any purpose other than evaluation requires a Board Technology License Agreement with AMD. AMD makes no representations or warranties of any kind regarding this schematic and design, including, not limited to, any implied warranty of merchantibility or fitness for a particular purpose, and disclaims responsibility forany consequences resulting from use of the information included herein.

Advanced Micro Devices Inc.
1 Commerce Valley Drive East
Markham, Ontario

AMD

Date: Monday, December 20, 2010 | Rev P01

Sheet 12 of 19

Title TURKS DDR3 1GB rVGA+HDMI/DP+DVI LP | Doc No. 105-C331xx-00

(15) Linear Regulators

LDO #1: Vin = 3.00V to 3.60V (3.3V +/- 9%) Vout = +1.8V +/- 2%; Iout = 1.6A (TBV) RMS MAX
PCB: 50 to 70mm sq. copper area for cooling

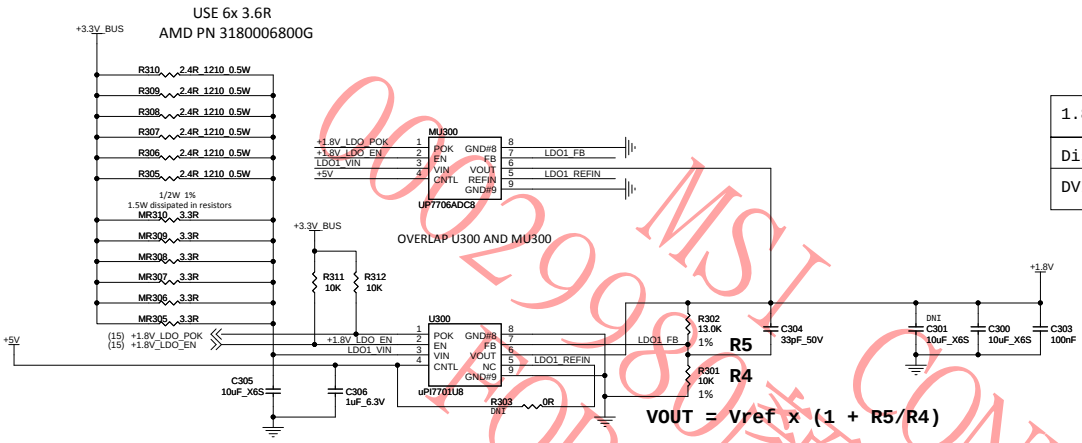

1.8V WORST-CASE REQUIREMENT	
Display Config	Est. Current
DVI+HDMI+DP	1330mA

Regulators for +5V, +5V_VESA and +5V_HDMI

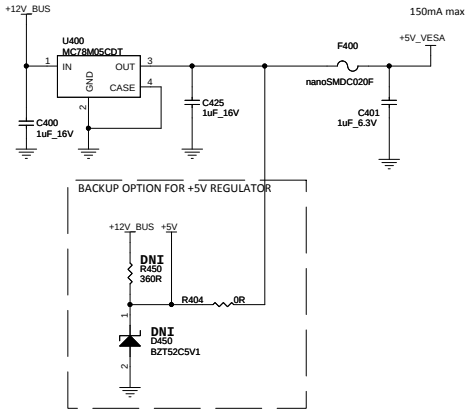

LDO #2: Vin = +1.32V to 1.84VMAX Vout = +1.01V +/- 2% Iout = 1.7A (TBV) RMS MAX
PCB: 50 to 70mm sq. copper area for cooling

1.0V WORST-CASE REQUIREMENT	
Display Config	Est. Current
DVI+HDMI+DP	1560mA

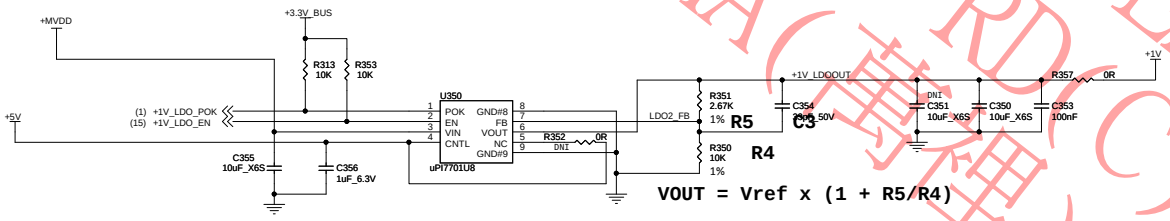

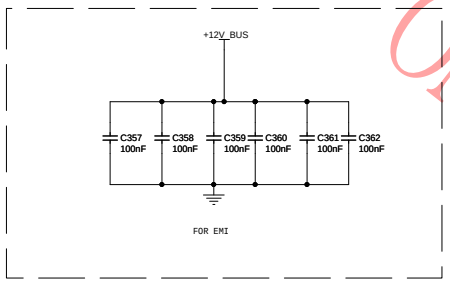

MSI CONFIDENTIAL
00029980 (C)20110408
FOR RMA (萬種) ONLY

CONFIDENTIAL & PROPRIETARY TO ADVANCED MICRO DEVICES INC.
© 2007 Advanced Micro Devices
This AMD Board schematic and design is the exclusive property of AMD, and is provided only to entities under a non-disclosure agreement with AMD for evaluation purposes. Further distribution or disclosure is strictly prohibited. Use of this schematic and design for any purpose other than evaluation requires a Board Technology License Agreement with AMD. AMD makes no representations or warranties of any kind regarding this schematic and design, including, not limited to, any implied warranty of merchantibility or fitness for a particular purpose, and disclaims responsibility forany consequences resulting from use of the information included herein.

Advanced Micro Devices Inc.
1 Commerce Valley Drive East
Markham, Ontario

AMD

Date: Monday, December 20, 2010 Rev P01

Sheet 13 of 19

Title TURKS DDR3 1GB rVGA+HDMI/DP+DVI LP Doc No. 105-C331xx-00

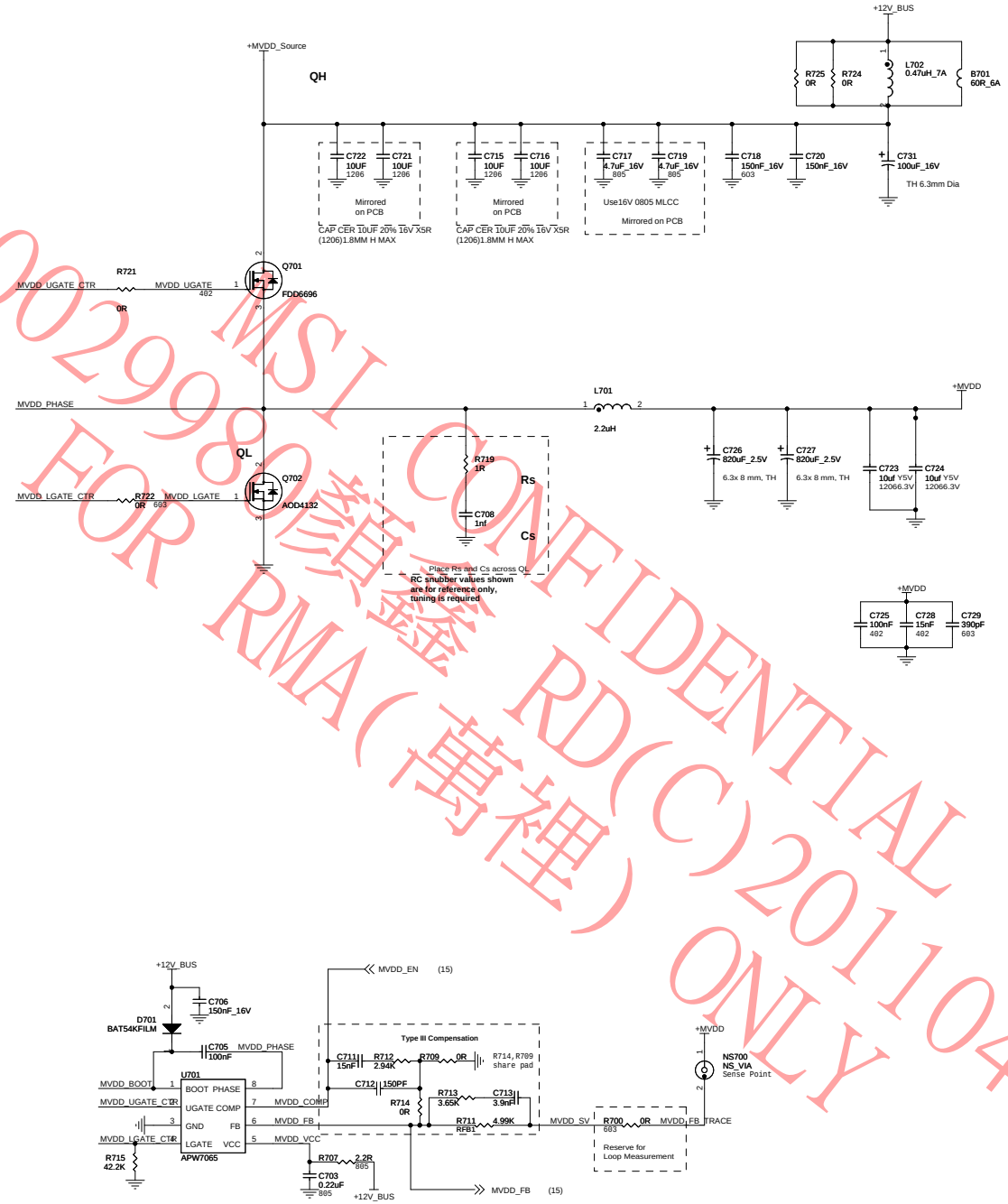

MSI CONFIDENTIAL
00029980 顏鑫 RD(C)20110408
FOR RMA(萬裡) ONLY

CONFIDENTIAL & PROPRIETARY TO ADVANCED MICRO DEVICES INC.
© 2007 Advanced Micro Devices
This AMD Board schematic and design is the exclusive property of AMD, and is provided only to entities under a non-disclosure agreement with AMD for evaluation purposes. Further distribution or disclosure is strictly prohibited. Use of this schematic and design for any purpose other than evaluation requires a Board Technology License Agreement with AMD. AMD makes no representations or warranties of any kind regarding this schematic and design, including, not limited to, any implied warranty of merchantibility or fitness for a particular purpose, and disclaims responsibility forany consequences resulting from use of the information included herein.

Advanced Micro Devices Inc.
1 Commerce Valley Drive East
Markham, Ontario

AMD

Date: Monday, December 20, 2010 | Rev P01

Sheet 14 of 19

Title TURKS DDR3 1GB rVGA+HDMI/DP+DVI LP | Doc No. 105-C331xx-00

(16) Power Management - Power Gating and Dynamic Voltage Control

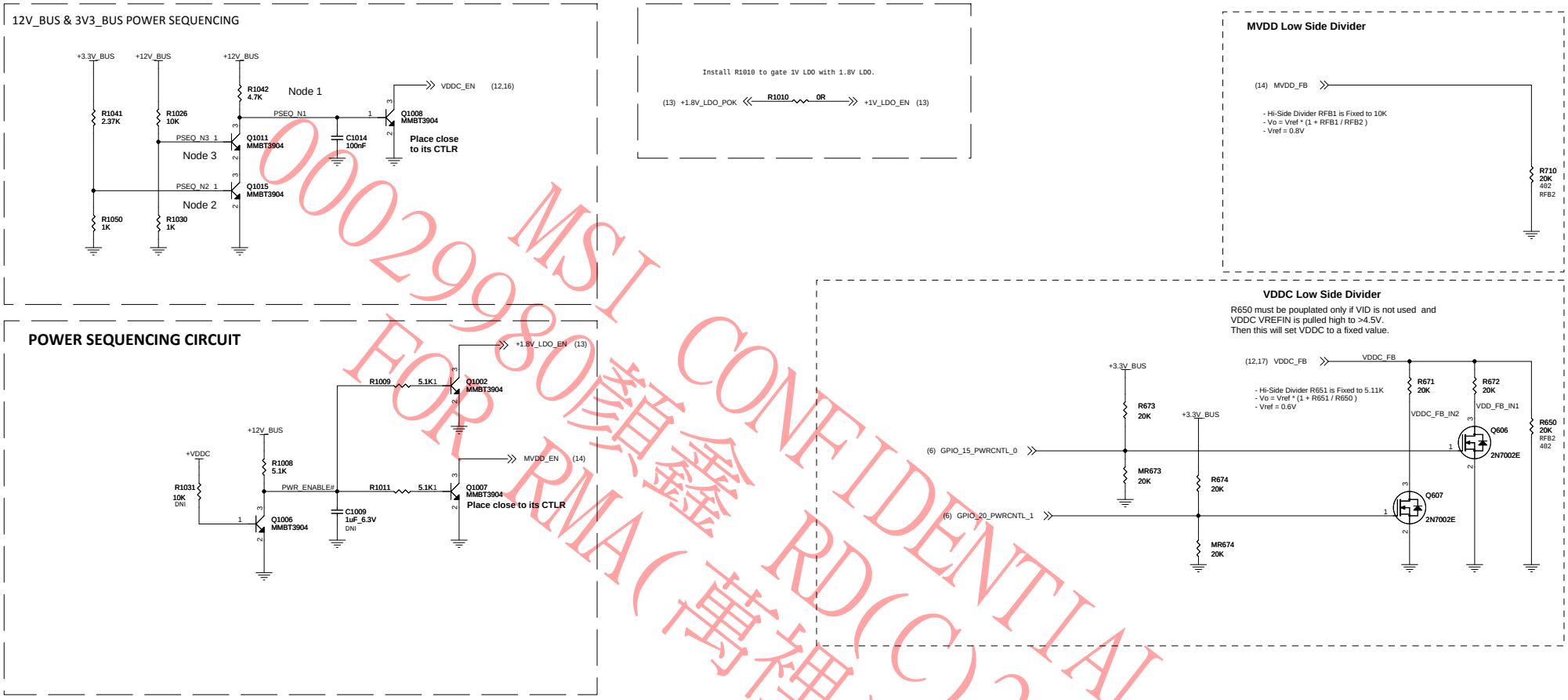

MSI CONFIDENTIAL
0002998080 賴鑫 RD(C)20110408
FOR RMA(萬裡) ONLY

CONFIDENTIAL & PROPRIETARY TO ADVANCED MICRO DEVICES INC.
© 2007 Advanced Micro Devices
This AMD Board schematic and design is the exclusive property of AMD, and is provided only to entities under a non-disclosure agreement with AMD for evaluation purposes. Further distribution or disclosure is strictly prohibited. Use of this schematic and design for any purpose other than evaluation requires a Board Technology License Agreement with AMD. AMD makes no representations or warranties of any kind regarding this schematic and design, including, not limited to, any implied warranty of merchantibility or fitness for a particular purpose, and disclaims responsibility forany consequences resulting from use of the information included herein.

Advanced Micro Devices Inc.
1 Commerce Valley Drive East
Markham, Ontario

AMD

Date:	Monday, December 20, 2010	Rev	P01
Sheet	15 of 19		
Title	TURKS DDR3 1GB rVGA+HDMI/DP+DVI LP	Doc No.	105-C331xx-00

(19) Mechanical and Thermal Management

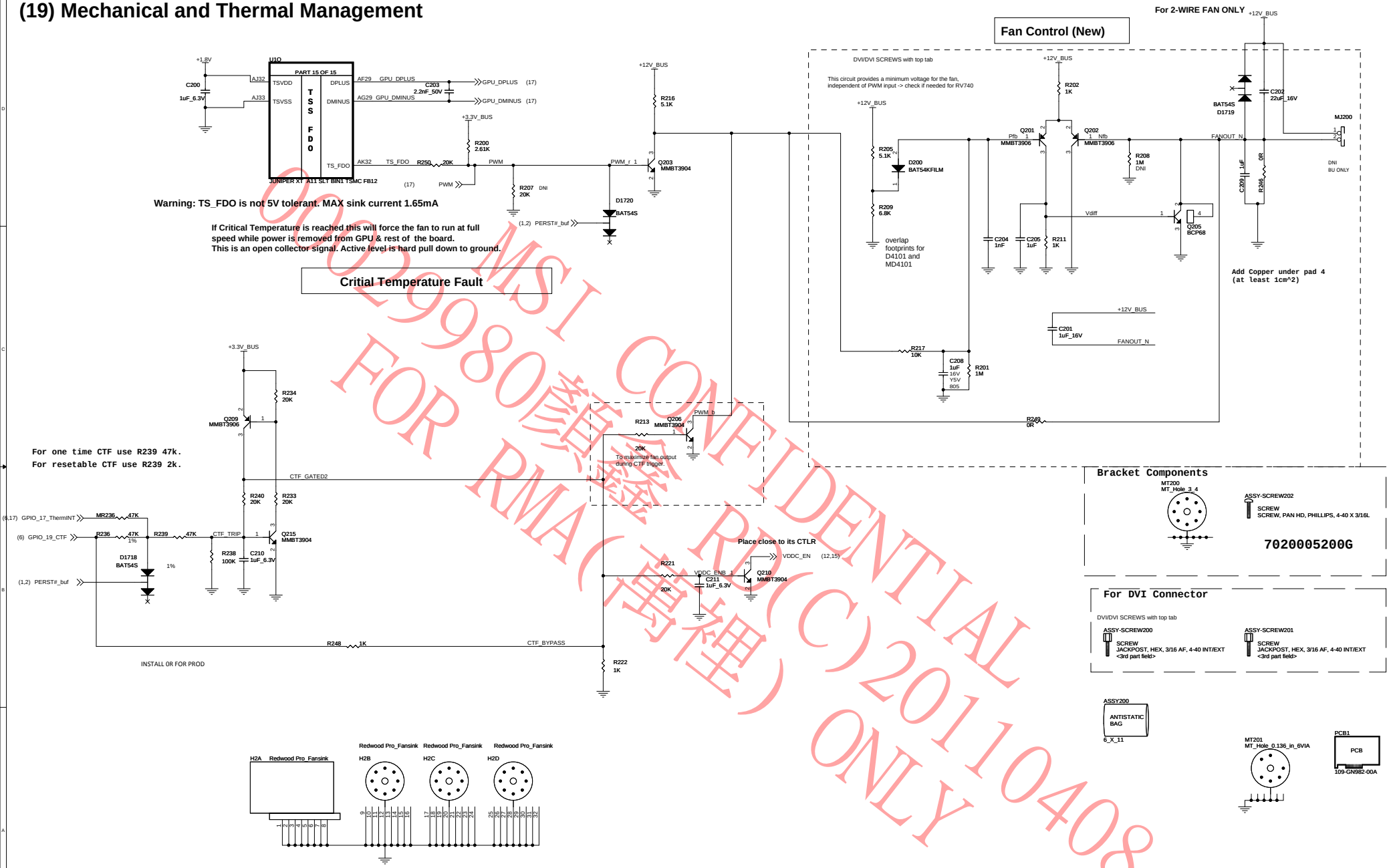

MSI CONFIDENTIAL
0029980 蕭森 RE(C)20110408
FOR RMA(萬裡) ONLY

CONFIDENTIAL & PROPRIETARY TO ADVANCED MICRO DEVICES INC.
© 2007 Advanced Micro Devices
This AMD Board schematic and design is the exclusive property of AMD, and is provided only to entities under a non-disclosure agreement with AMD for evaluation purposes. Further distribution or disclosure is strictly prohibited. Use of this schematic and design for any purpose other than evaluation requires a Board Technology License Agreement with AMD. AMD makes no representations or warranties of any kind regarding this schematic and design, including, not limited to, any implied warranty of merchantibility or fitness for a particular purpose, and disclaims responsibility forany consequences resulting from use of the information included herein.

Advanced Micro Devices Inc.
1 Commerce Valley Drive East
Markham, Ontario

Date: Monday, December 20, 2010 | Rev P01

Sheet 16 of 19

Title TURKS DDR3 1GB rVGA+HDMI/DP+DVI LP | Doc No. 105-C331xx-00

(19) Debug Circuits

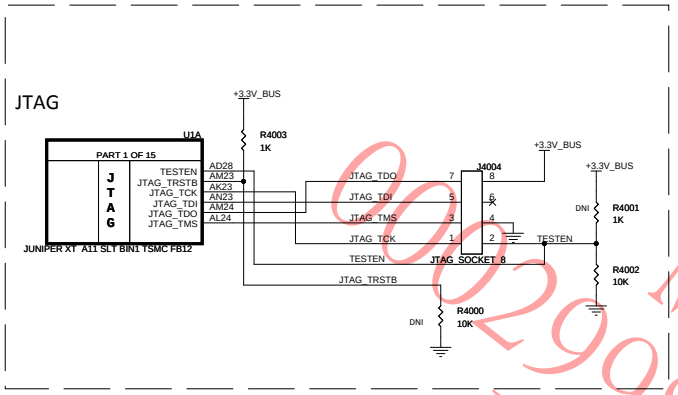

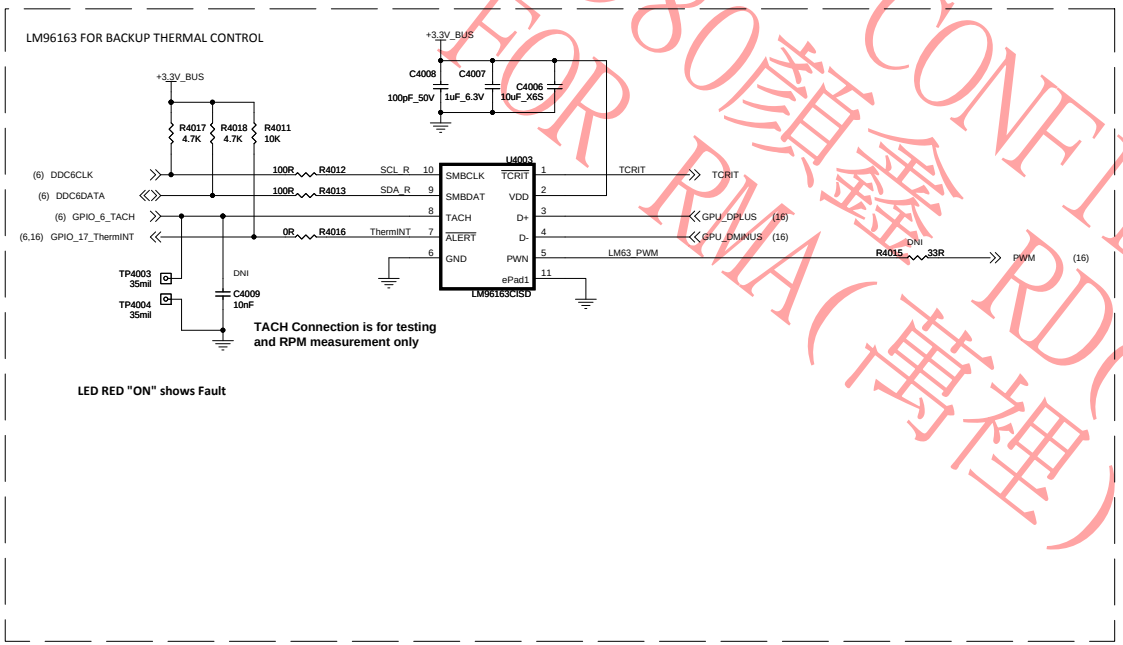

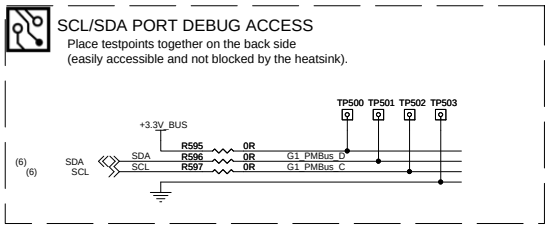

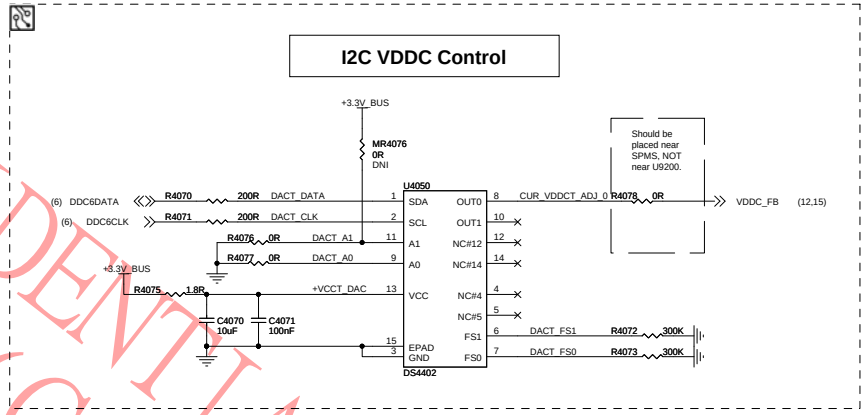

CONFIDENTIAL & PROPRIETARY TO ADVANCED MICRO DEVICES INC.
© 2007 Advanced Micro Devices
This AMD Board schematic and design is the exclusive property of AMD, and is provided only to entities under a non-disclosure agreement with AMD for evaluation purposes. Further distribution or disclosure is strictly prohibited. Use of this schematic and design for any purpose other than evaluation requires a Board Technology License Agreement with AMD. AMD makes no representations or warranties of any kind regarding this schematic and design, including, not limited to, any implied warranty of merchantibility or fitness for a particular purpose, and disclaims responsibility forany consequences resulting from use of the information included herein.

Advanced Micro Devices Inc.
1 Commerce Valley Drive East
Markham, Ontario

Date: Monday, December 20, 2010	Rev P01
Sheet 17 of 19	
Title TURKS DDR3 1GB rVGA+HDMI/DP+DVI LP	Doc No. 105-C331xx-00

MSI CONFIDENTIAL
002980(含錄) RD(C)20110408
FOR RMA(專用) ONLY

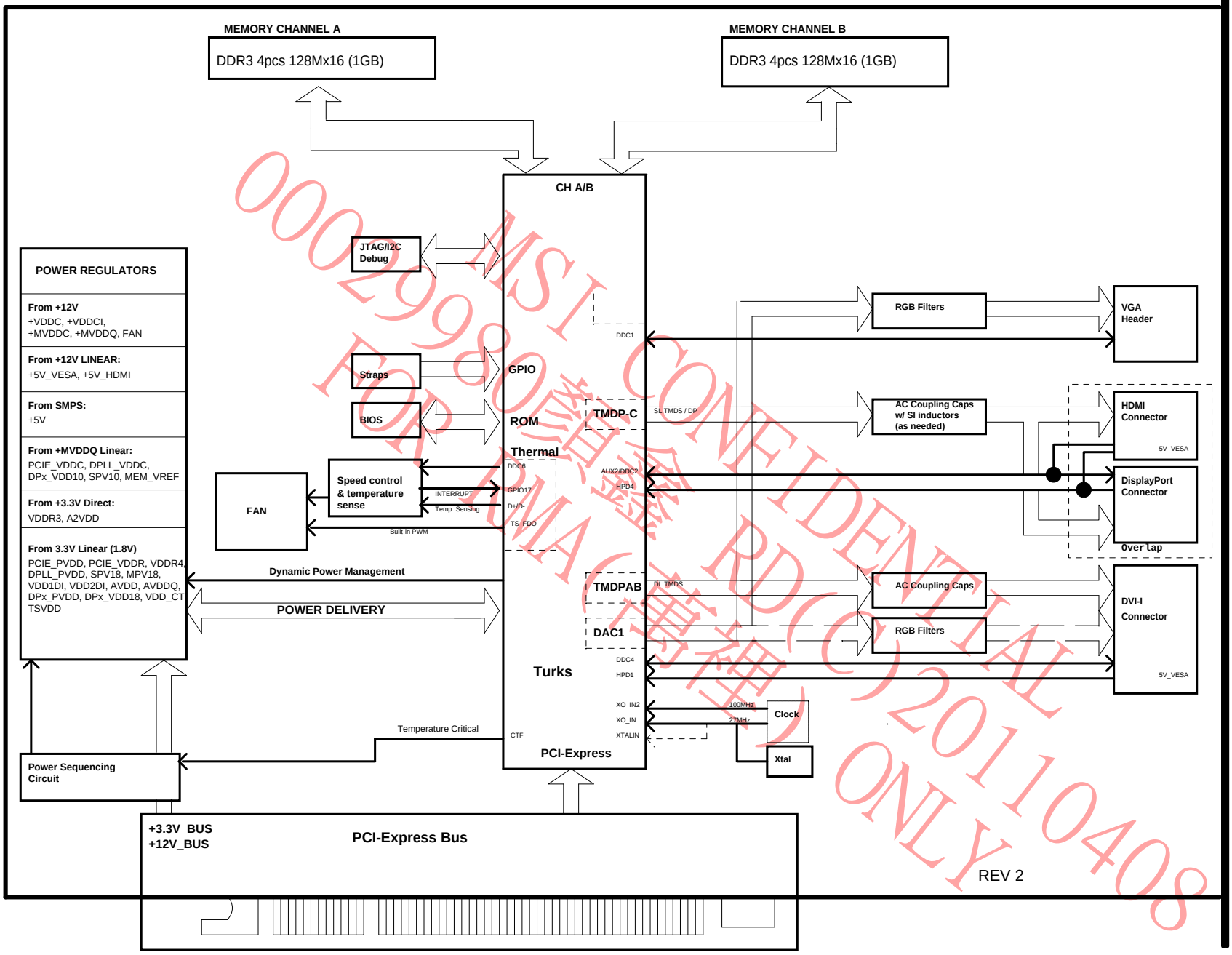

0002998 微信 RD(C)20110408 FOR RMA (售後用) ONLY
MSI CONFIDENTIAL

TURKS DDR3 1GB rVGA+HDMI/DP+DVI LP

CONFIDENTIAL & PROPRIETARY TO ADVANCED MICRO DEVICES, INC.
© 2007 Advanced Micro Devices
This AMD Board schematic and design is the exclusive property of AMD, and is provided only to entities under a non-disclosure agreement with AMD for evaluation purposes. Further distribution or disclosure is strictly prohibited. Use of this schematic and design for any purpose other than evaluation requires a Board Technology License Agreement with AMD. AMD makes no representations or warranties of any kind regarding this schematic and design, including, not limited to, any implied warranty of merchantability or fitness for a particular purpose, and disclaims responsibility for any consequences resulting from use of the information included herein.

Advanced Micro Devices Inc.
1 Commerce Valley Drive East
Markham, Ontario
Canada, L3T 7X6
(905) 882-2600

Date:	Monday, December 20, 2010	Rev	P01
Sheet	of	105-C331xx-00	
Title	TURKS DDR3 1GB rVGA+HDMI/DP+DVI LP	Doc No.	

Title	Schematic No.	Date:
TURKS DDR3 1GB rVGA+HDMI/DP+DVI LP	105-C331xx-00	Monday, December 20, 2010

REVISION HISTORY

NOTE: **This schematic represents the PCB, it does not represent any specific SKU.**
For Stuffing options (component values, DNI's, ...) please consult the product specific BOM.
Please contact AMD representative to obtain latest BOM closest to the application desired.

Rev P01

Sch Rev	PCB Rev	Date	REVISION DESCRIPTION
00	00A	2010/10/12	Turks PRO DDR3 1GB BASED ON C241, changing dual link DVI to TMDP E&F

MSI CONFIDENTIAL
00029980顏鑫 RD(C)20110408
FOR RMA(萬裡) ONLY