R200-830

8500LE, 4MX32 DDR, RGB, EXTERNAL RGB, S-OUT/IN, AV-OUT/IN , AGP4X

Title	Page
Cover Page	0
AGP Bus	1
Power / Regulator	2
R200_Main (1/3)	3
R200_Memory (2/3)	4
R200_Power (3/3)	5
BIOS	6
Hardware Straps	7
Series Terminator	8
4M X 32 DDR	9
CRT1	10
CRT2	11
Theater	12
Mechanical	13

Title	COVER PAGE	
Size	Document Number R200-830	Rev 100
Date: Saturday, February 23, 2002	Sheet 1 of 14	

2/4X AGP BUS

AVSS PVSS TPVSS TXVSSR MPVSS VSS_DAC AVSSQ VSSDI

VDDP C3 10nF C4 100nF

+12V C434 100uF

+5V C435 100uF

(3) AGP_INTR#

R459 0R

(3,12) RESET# R3 100R 6 U1B 5 4 AGP_RESET#

SN74ACT86PW

R4 180R

(3) AGP_WBF#

(3) AGP_GNT#

(3) AGP_SBSTB# R1 0R AGP_SBSTB# R

(3) AGP_ADSTB1# R5 0R AGP_ADSTB1# R

(3) AGP_FRAME# R7 0R AGP_FRAME# R

(3) AGP_TRDY# R9 0R AGP_TRDY# R

(3) AGP_STOP# R11 0R AGP_STOP# R

(3) AGP_PAR AGP_PAR R

(3) AGP_ADSTB0# R12 0R AGP_ADSTB0# R

+3.3V VDDP +12V R1093 10K

MAGP1

A1	12V	B1	OVRCNT#
A2	TYPEDET#	B2	5.0V
A3	RESERVED	B3	5.0V
A4	USB-	B4	USB+
A5	GND	B5	GND
A6	INTA#	B6	INTB#
A7	RST#	B7	CLK
A8	GNT#	B8	REQ#
A9	VCC3.3	B9	VCC3.3
A10	ST1	B10	ST0
A11	RESERVED	B11	ST2
A12	PIPE#	B12	RBF#
A13	GND	B13	GND
A14	WBF#	B14	RESERVED
A15	SBA1	B15	SBA0
A16	VCC3.3	B16	VCC3.3
A17	SBA3	B17	SBA2
A18	SB_STB#	B18	SB_STB
A19	GND	B19	GND
A20	SBA5	B20	SBA4
A21	SBA7	B21	SBA6
A22	KEY	B22	KEY
A23	KEY	B23	KEY
A24	KEY	B24	KEY
A25	KEY	B25	KEY
A26	AD30	B26	AD31
A27	AD28	B27	AD29
A28	VCC3.3	B28	VCC3.3
A29	AD26	B29	AD27
A30	AD24	B30	AD25
A31	GND	B31	GND
A32	AD_STB1#	B32	AD_STB1
A33	C/BE3#	B33	AD23
A34	VDDQ	B34	VDDQ
A35	AD22	B35	AD21
A36	AD20	B36	AD19
A37	GND	B37	GND
A38	AD18	B38	AD17
A39	AD16	B39	C/BE2#
A40	VDDQ	B40	VDDQ
A41	FRAME#	B41	IRDY#
A42	KEY	B42	KEY
A43	KEY	B43	KEY
A44	KEY	B44	KEY
A45	KEY	B45	KEY
A46	TRDY#	B46	DEVSEL#
A47	STOP#	B47	VDDQ
A48	PME#	B48	PERR#
A49	GND	B49	GND
A50	PAR	B50	SERR#
A51	AD15	B51	C/BE1#
A52	VDDQ	B52	VDDQ
A53	AD13	B53	AD14
A54	AD11	B54	AD12
A55	GND	B55	GND
A56	AD9	B56	AD10
A57	C/BE0#	B57	AD8
A58	VDDQ	B58	VDDQ
A59	AD_STB0#	B59	AD_STB0
A60	AD6	B60	AD7
A61	GND	B61	GND
A62	AD4	B62	AD5
A63	AD2	B63	AD3
A64	VDDQ	B64	VDDQ
A65	AD0	B65	AD1
A66	VREFGC	B66	VREFCG

UNIVERSAL AGP BUS

AGP_ST1 AGP_SBA1 AGP_SBA3 AGP_SBA5 AGP_SBA7 AGP_AD30 AGP_AD28 AGP_AD26 AGP_AD24 AGP_C/BE#3 AGP_AD22 AGP_AD20 AGP_AD18 AGP_AD16 AGP_AD15 AGP_AD13 AGP_AD11 AGP_AD9 AGP_C/BE#0 AGP_AD6 AGP_AD4 AGP_AD2 AGP_AD0

AGP_ST0 AGP_ST2 AGP_SBA0 AGP_SBA2 AGP_SBA4 AGP_SBA6 AGP_AD31 AGP_AD29 AGP_AD27 AGP_AD25 AGP_AD23 AGP_AD21 AGP_AD19 AGP_AD17 AGP_C/BE#2 AGP_IRDY# R AGP_DEVSEL# R AGP_C/BE#1 AGP_AD14 AGP_AD12 AGP_AD10 AGP_AD8 AGP_AD7 AGP_AD5 AGP_AD3 AGP_AD1

AGP_C/BE#[3..0] AGP_AD[31..0] AGP_SBA[7..0] AGP_ST[2..0]

AGP_AGPCLK R R18 0R AGP_AGPCLK (3)

C15 10pF DNI

AGP_REQ# (3)

AGP_RBF# (3)

AGP_SBSTB_R R2 0R AGP_SBSTB (3)

AGP_ADSTB1_R R6 0R AGP_ADSTB1 (3)

AGP_IRDY# (3)

AGP_DEVSEL# (3)

AGP_ADSTB0_R R13 0R AGP_ADSTB0 (3)

AGP_AGPREF (3)

VDDP C12 470pF R14 1K R15 75R AGP_VREFGC R16 75R R17 1K C14 470pF

SYMBOL LEGEND

DNI	DO NOT INSTALL
#	ACTIVE LOW
	DIGITAL GROUND
	ANALOG GROUND

Title	AGP BUS		
Size	Document Number R200-830		Rev 100
Date: Saturday, February 23, 2002	Sheet 2 of 14		

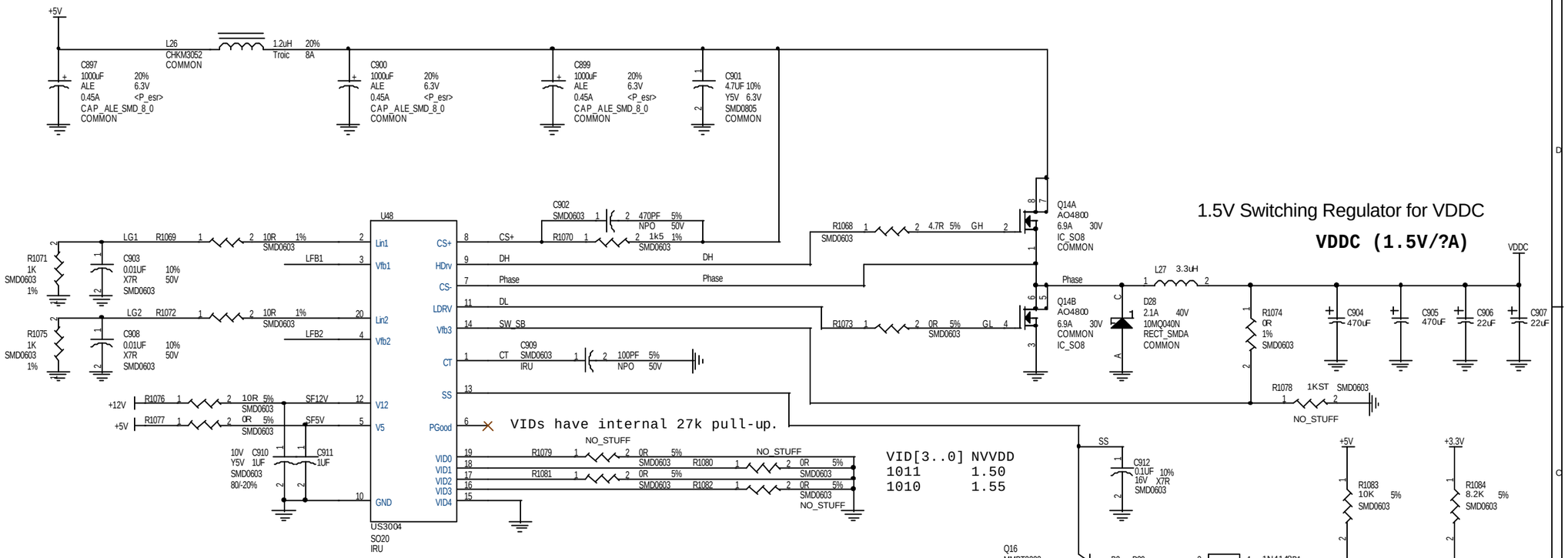

VDDQ	Ra	Rb
2.5V	1K	1K
2.4V	1.33K	1.43K
1.8V	681R	1.5K

Title: POWER / REGULATOR

Size | Document Number: R200-830 | Rev: 100

Date: Saturday, February 23, 2002 | Sheet 3 of 14

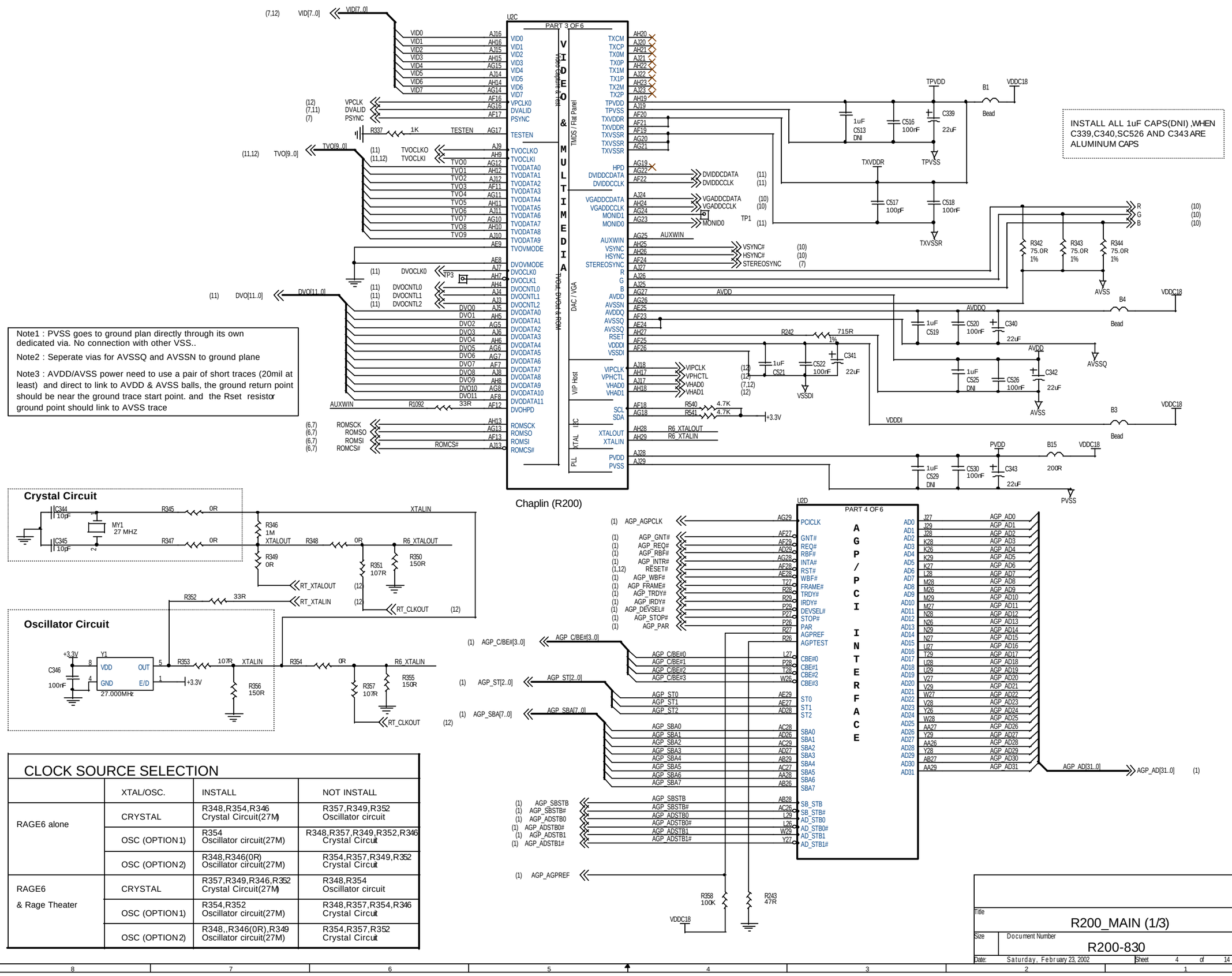
U2C
PART 3 OF 6
VIDEO & MULTIMEDIA
Video Capture & Test
TMDS / Flat Panel
DAC / VGA
TV-Out, DVOut & ROM
VIP Host
I2C
XTAL
PLL
VID[7..0]
VID0 AJ16
VID1 AH16
VID2 AJ15
VID3 AH15
VID4 AG15
VID5 AJ14
VID6 AH14
VID7 AG14
VPCLK AF16
DVALID AG16
PSYNC AF17
R337 1K TESTEN AG17
TVO[9..0]
TVOCLKO AJ9
TVOCLKI AH9
TVO0 AG12
TVO1 AH12
TVO2 AJ12
TVO3 AF11
TVO4 AG11
TVO5 AH11
TVO6 AJ11
TVO7 AG10
TVO8 AH10
TVO9 AJ10
AE9
AE8
DVOVMODE AJ7
DVOCLK0 AH7
DVOCLK1 AH4
DVOCNTL0 AJ4
DVOCNTL1 AJ3
DVOCNTL2 AH3
DVO[11..0]
DVO0 AJ5
DVO1 AH5
DVO2 AG5
DVO3 AJ6
DVO4 AH6
DVO5 AG6
DVO6 AG7
DVO7 AF7
DVO8 AJ8
DVO9 AH8
DVO10 AG8
DVO11 AF8
AUXWIN R1092 33R AF12
AH13
AG13
AF13
ROMCS# AJ13
TXCM AH20
TXCP AJ20
TXOM AH21
TXOP AJ21
TX1M AH22
TX1P AJ22
TX2M AH23
TX2P AJ23
TPVDD AH19
TPVSS AJ19
TXVDDR AF20
TXVDDR AF21
TXVSSR AF19
TXVSSR AG20
TXVSSR AG21
HPD AG19
DVIDDCDATA AG22
DVIDDCCLK AF22
VGADDCDATA AJ24
VGADDCCLK AH24
MONID1 AG24
MONID0 AG23
AUXWIN AG25
VSYNC AH25
HSYNC AH26
STEREOSYNC AF24
R AJ27
G AJ26
B AJ25
AVDD AG27
AVSSN AG26
AVDDQ AE25
AVSSQ AF23
RSET AE24
VDDDI AH27
VSSDI AF25
AF26
VIPCLK AJ18
VIPHCTL AH17
VHAD0 AJ17
VHAD1 AH18
SCL AF18
SDA AG18
XTALOUT AH28
XTALIN AH29
PVDD AJ28
PVSS AJ29
DVIDDCDATA (11)
DVIDDCCLK (11)
VGADDCDATA (10)
VGADDCCLK (10)
MONID0 (11)
TP1
AUXWIN
VSYNC# (10)
HSYNC# (10)
STEREOSYNC (7)
AVDD
VIPCLK (12)
VIPHCTL (12)
VHAD0 (7,12)
VHAD1 (12)
R540 4.7K
R541 4.7K
+3.3V
R6_XTALOUT
R6_XTALIN
VDDDI
TPVDD
B1
VDDC18
Bead
1uF C513 DNI
C516 100nF
C339 22uF
TPVSS
TXVDDR
C517 100pF
C518 100nF
TXVSSR
R342 75.0R 1%
R343 75.0R 1%
R344 75.0R 1%
R
G
B
(10)
(10)
(10)
AVSS
B4
AVDDQ
C519 1uF
C520 100nF
C340 22uF
R242 715R 1%
C521 1uF
C522 100nF
C341 22uF
VSSDI
AVDD
AVSSQ
C525 1uF DNI
C526 100nF
C342 22uF
AVSS
B3
VDDC18
Bead
VDDDI
PVDD
B15
200R
VDDC18
C529 1uF DNI
C530 100nF
C343 22uF
PVSS
INSTALL ALL 1uF CAPS(DNI) ,WHEN C339,C340,SC526 AND C343 ARE ALUMINUM CAPS
Chaplin (R200)
U2D
PART 4 OF 6
AGP/PCI INTERFACE
PCICLK AG29
GNT# AF27
REQ# AF29
RBF# AD29
INTA# AG28
RST# AF28
WBF# AE28
FRAME# T27
TRDY# R28
IRDY# R29
DEVSEL# P29
STOP# P27
PAR P26
AGPREF R27
AGPTEST R26
CBE#0 L27
CBE#1 P28
CBE#2 T28
CBE#3 W26
ST0 AE29
ST1 AE27
ST2 AD28
SBA0 AC28
SBA1 AD26
SBA2 AC29
SBA3 AD27
SBA4 AB29
SBA5 AC27
SBA6 AA28
SBA7 AB26
SB_STB AB28
SB_STB# AC26
AD_STB0 L29
AD_STB0# L26
AD_STB1 W29
AD_STB1# Y27
AD0 J27
AD1 J29
AD2 J28
AD3 K28
AD4 K26
AD5 K29
AD6 K27
AD7 L28
AD8 M28
AD9 M26
AD10 M29
AD11 M27
AD12 N28
AD13 N26
AD14 N29
AD15 N27
AD16 U27
AD17 T29
AD18 U28
AD19 U29
AD20 V27
AD21 V29
AD22 W27
AD23 V28
AD24 Y26
AD25 W28
AD26 AA27
AD27 Y29
AD28 AA26
AD29 Y28
AD30 AB27
AD31 AA29
AGP_AD0 AGP_AD1 AGP_AD2 AGP_AD3 AGP_AD4 AGP_AD5 AGP_AD6 AGP_AD7 AGP_AD8 AGP_AD9 AGP_AD10 AGP_AD11 AGP_AD12 AGP_AD13 AGP_AD14 AGP_AD15 AGP_AD16 AGP_AD17 AGP_AD18 AGP_AD19 AGP_AD20 AGP_AD21 AGP_AD22 AGP_AD23 AGP_AD24 AGP_AD25 AGP_AD26 AGP_AD27 AGP_AD28 AGP_AD29 AGP_AD30 AGP_AD31
AGP_AD[31..0]
AGP_AD[31..0] (1)
(1) AGP_AGPCLK
(1) AGP_GNT#
(1) AGP_REQ#
(1) AGP_RBF#
(1) AGP_INTR#
(1,12) RESET#
(1) AGP_WBF#
(1) AGP_FRAME#
(1) AGP_TRDY#
(1) AGP_IRDY#
(1) AGP_DEVSEL#
(1) AGP_STOP#
(1) AGP_PAR
(1) AGP_C/BE#[3..0]
AGP_C/BE#[3..0]
AGP_C/BE#0
AGP_C/BE#1
AGP_C/BE#2
AGP_C/BE#3
(1) AGP_ST[2..0]
AGP_ST[2..0]
AGP_ST0
AGP_ST1
AGP_ST2
(1) AGP_SBA[7..0]
AGP_SBA[7..0]
AGP_SBA0
AGP_SBA1
AGP_SBA2
AGP_SBA3
AGP_SBA4
AGP_SBA5
AGP_SBA6
AGP_SBA7
(1) AGP_SBSTB
(1) AGP_SBSTB#
(1) AGP_ADSTB0
(1) AGP_ADSTB0#
(1) AGP_ADSTB1
(1) AGP_ADSTB1#
AGP_SBSTB
AGP_SBSTB#
AGP_ADSTB0
AGP_ADSTB0#
AGP_ADSTB1
AGP_ADSTB1#
(1) AGP_AGPREF
R358 100K
R243 47R
VDDC18
Crystal Circuit
C344 10pF
C345 10pF
MY1 27 MHZ
R345 0R
R347 0R
R346 1M
R349 0R
R348 0R
R351 107R
R350 150R
XTALIN
R6_XTALOUT
RT_XTALOUT (12)
RT_XTALIN (12)
RT_CLKOUT (12)
R352 33R
Oscillator Circuit
+3.3V
Y1
C346 100nF
VDD
GND
OUT
E/D
27.000MHz
R353 107R
R354 0R
R356 150R
R357 107R
R355 150R
XTALIN
R6_XTALIN
+3.3V
RT_CLKOUT (12)
Note1 : PVSS goes to ground plan directly through its own dedicated via. No connection with other VSS..
Note2 : Seperate vias for AVSSQ and AVSSN to ground plane
Note3 : AVDD/AVSS power need to use a pair of short traces (20mil at least) and direct to link to AVDD & AVSS balls, the ground return point should be near the ground trace start point. and the Rset resistor ground point should link to AVSS trace
CLOCK SOURCE SELECTION
RAGE6 alone
CRYSTAL R348,R354,R346 Crystal Circuit(27M) R357,R349,R352 Oscillator circuit
OSC (OPTION1) R354 Oscillator circuit(27M) R348,R357,R349,R352,R346 Crystal Circuit
OSC (OPTION2) R348,R346(0R) Oscillator circuit(27M) R354,R357,R349,R352 Crystal Circuit
RAGE6 & Rage Theater
CRYSTAL R357,R349,R346,R352 Crystal Circuit(27M) R348,R354 Oscillator circuit
OSC (OPTION1) R354,R352 Oscillator circuit(27M) R348,R357,R354,R346 Crystal Circuit
OSC (OPTION2) R348,,R346(0R),R349 Oscillator circuit(27M) R354,R357,R352 Crystal Circuit
Title
R200_MAIN (1/3)
Size
Document Number
R200-830
Rev
100
Date: Saturday, February 23, 2002
Sheet 4 of 14

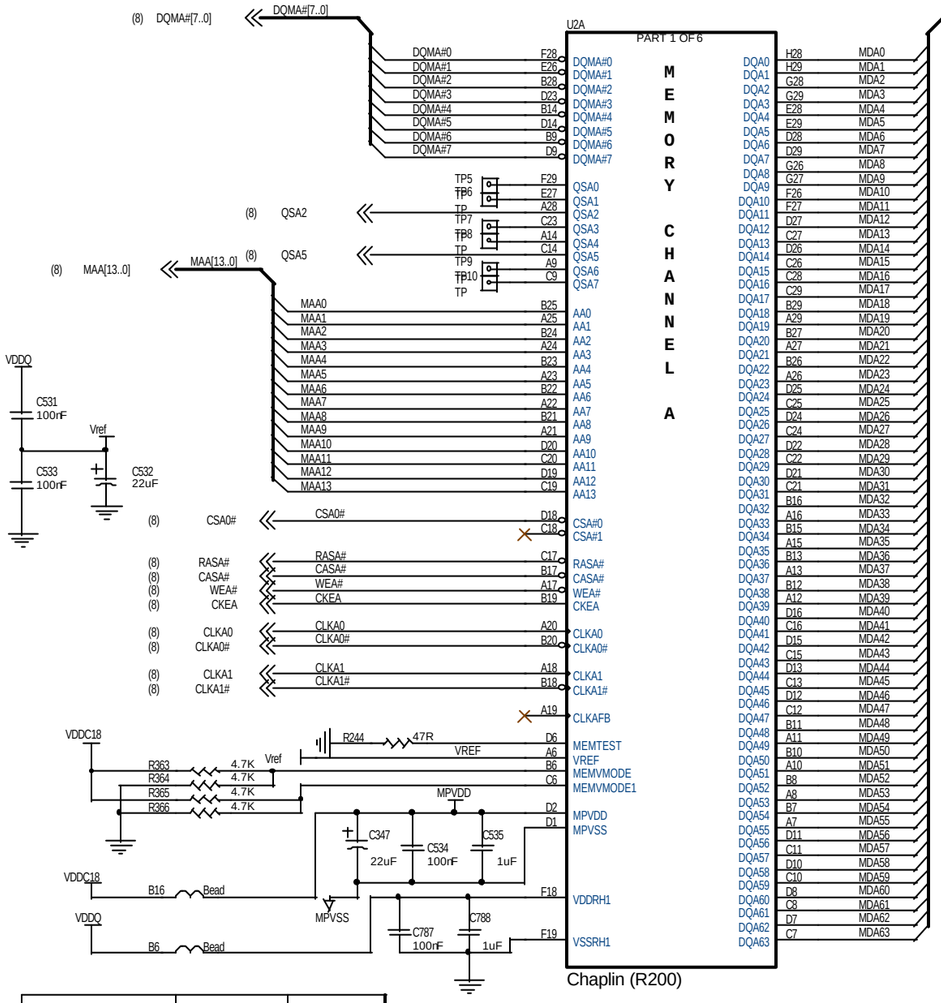

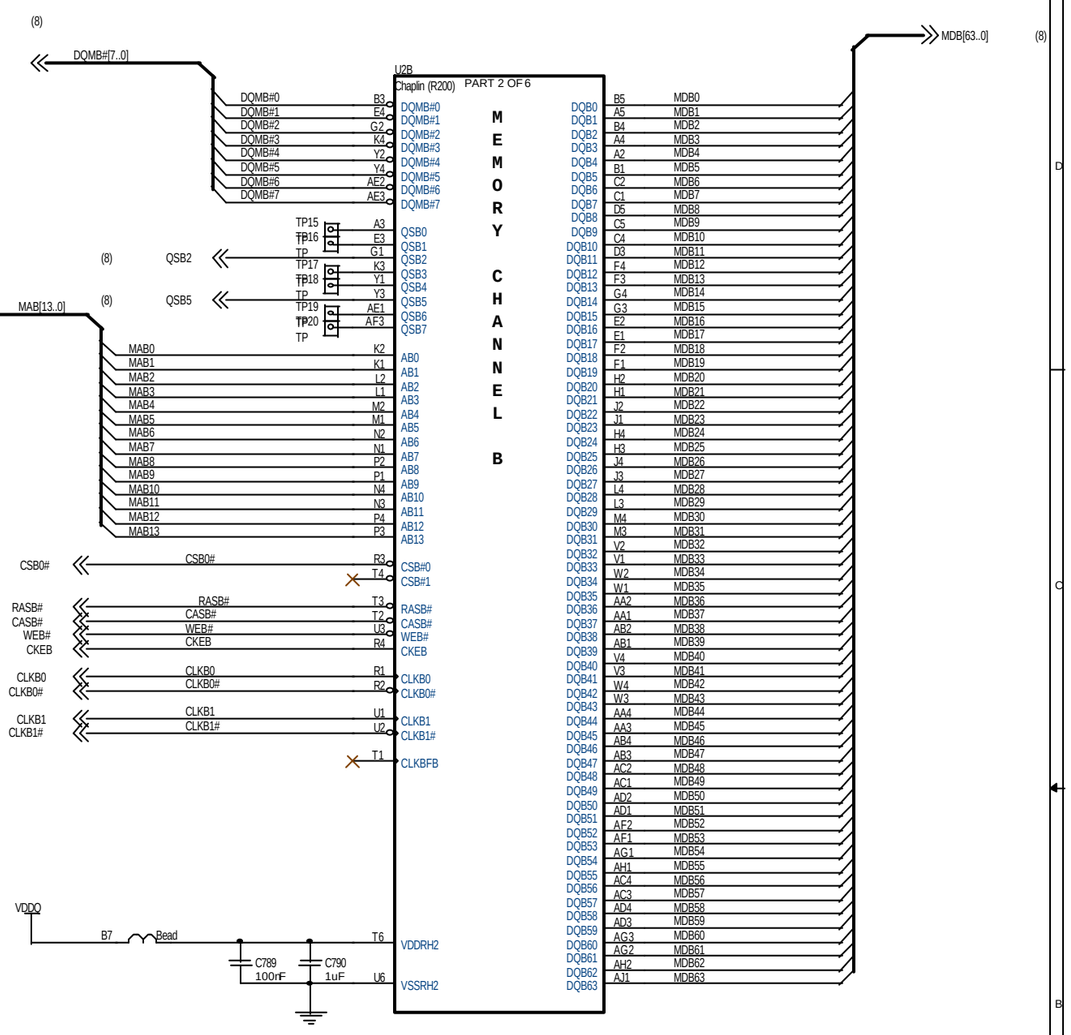

VDDR (MEMORY I/O)	MEMVMODE1	MEMVMODE
+3.3V	HIGH	HIGH
+2.5V	LOW	HIGH
+1.8V	HIGH	LOW

Note4 : The MPVDD regulator will be moved closer to the ASIC and its ground terminal will be bussed to the ASIC as MPVSS

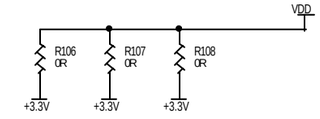

DDR TYPE	INSTALL	DNI
+3.3V VDD	R106,R107,R108	+2.5V Regulator for Memory Core VDD
+2.5V VDD	+2.5V Regulator for Memory Core VDD	R106,R107,R108

Title	R200_MEMORY (2/3)	
Size	Document Number R200-830	Rev 100
Date: Saturday, February 23, 2002	Sheet 5 of 14	

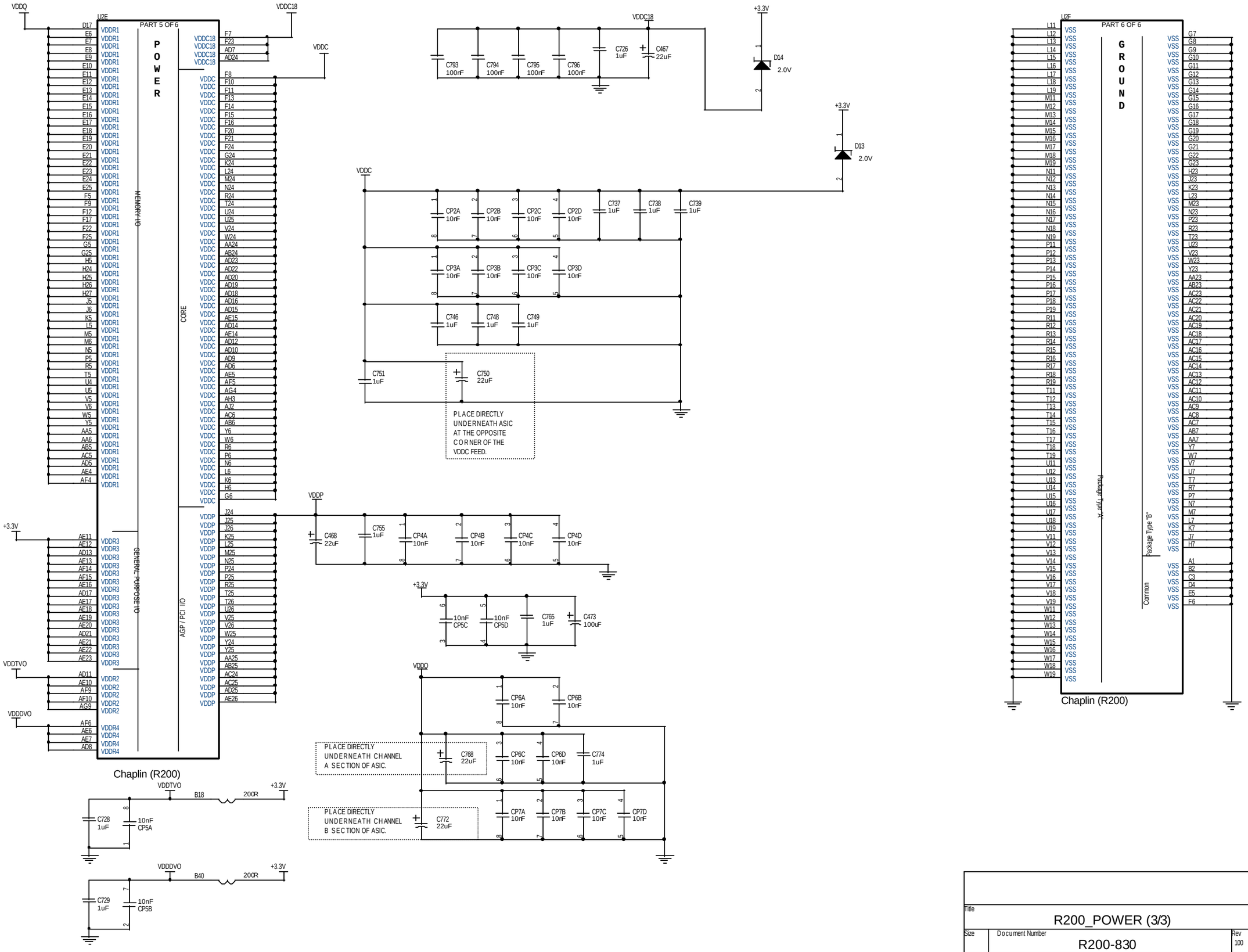

Title	R200_POWER (3/3)	
Size	Document Number R200-830	Rev 100
Date: Saturday, February 23, 2002	Sheet 6 of 14	

SERIAL EEPROM(8PIN,TYPE1)

SERIAL EEPROM(8PIN,TYPE2)

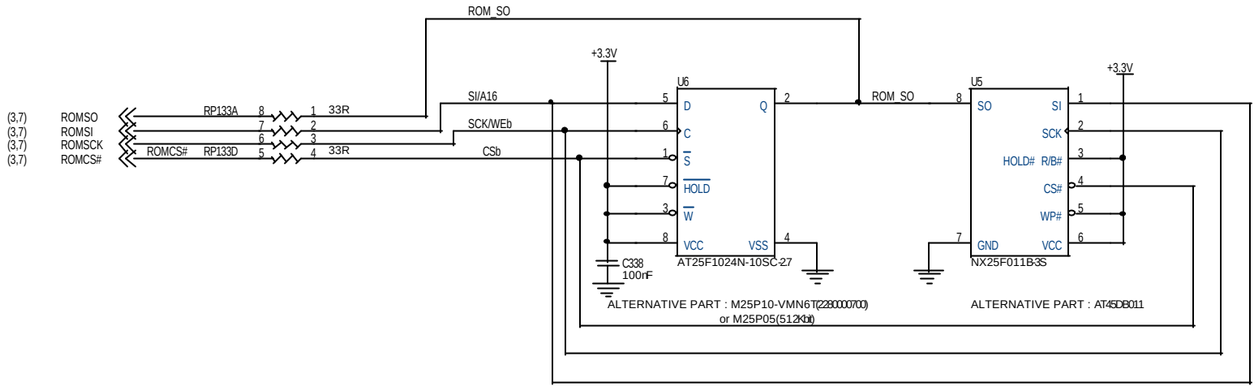

Title	BIOS		
Size	Document Number R200-830		Rev 100
Date: Saturday, February 23, 2002		Sheet 7 of 14	

STRAPS

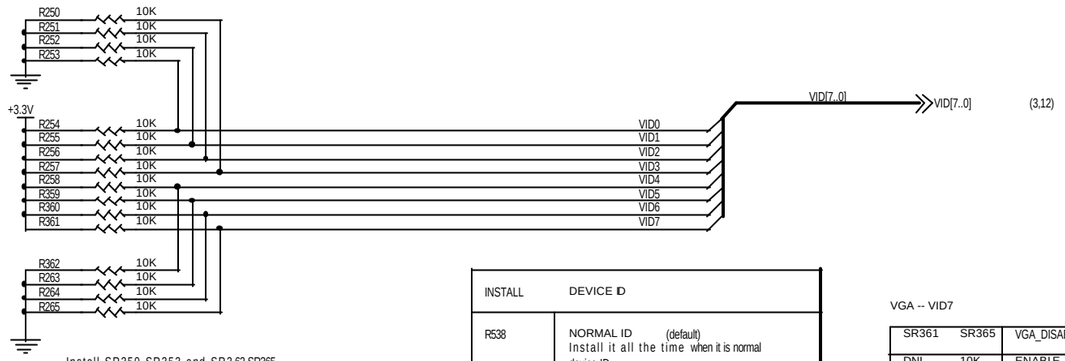

Install SR350-SR353 and SR362-SR365 when internal pull-down doesn't work

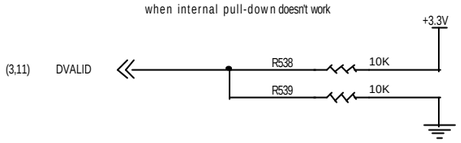

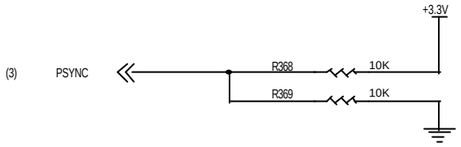

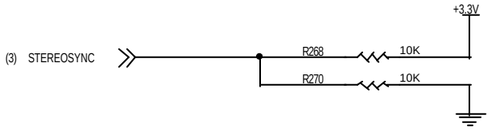

INSTALL	DEVICE ID
R538	NORMAL ID (default) Install it all the time when it is normal device ID
R539	WORKSTATION ID

INSTALL	ID_DISABLE
R369	NORMAL OPERATION (default) Install it when internal pull-down doesn't work
R368	CHIP SHUTS DOWN

VIP -- VHAD0

INSTALL	VIP DEVICE
R370	NO SLAVE VIP (DEFAULT) Install it when internal pullup doesn't work
	SLAVE VIP VIP device will drive low when VIP is attached.

INSTALL	INTERRUPT
SR370	ENABLE (Default) Install it when internal pull-down doesn't work
SR368	DISABLE

VGA -- VID7

SR361	SR365	VGA_DISABLE
DNI	10K	ENABLE (DEFAULT)
10K	DNI	DISABLE

AGPFBSKEW -- VID(10)

SR355	SR352	SR354	SR353	
DNI	10K	DNI	10K	DEFAULT
X	X	X	X	TBD

X1CLK_SKEW --VID(32)

SR357	SR350	SR356	SR351	
DNI	10K	DNI	10K	DEFAULT
X	X	X	X	TBD

BUSCFG -- VID(6:4)

BUSTYPE_2 VID6		BUSTYPE_1 VID5		BUSTYPE_0 VID4		
SR360	SR364	SR359	SR363	SR358	SR362	DESCRIPTION
DNI	10K	DNI	10K	DNI	10K	AGP 4X, PLL CLK, IDSEL=AD16 (Default)
DNI	10K	DNI	10K	10K	DNI	AGP 4X, PLL CLK, IDSEL = AD17
DNI	10K	10K	DNI	DNI	10K	AGP 1X/2X, PLL CLK, IDSEL = AD16
DNI	10K	10K	DNI	10K	DNI	AGP 1X/2X, PLL CLK, IDSEL = AD17
10K	DNI	DNI	10K	DNI	10K	PCI 66MHz, PLL CLK
10K	DNI	DNI	10K	10K	DNI	PCI 33MHz, 3.3V, REF CLK
10K	DNI	10K	DNI	DNI	10K	AGP 1X, REF CLK, IDSEL = AD16
10K	DNI	10K	DNI	10K	DNI	AGP 1X, REF CLK, IDSEL = AD17

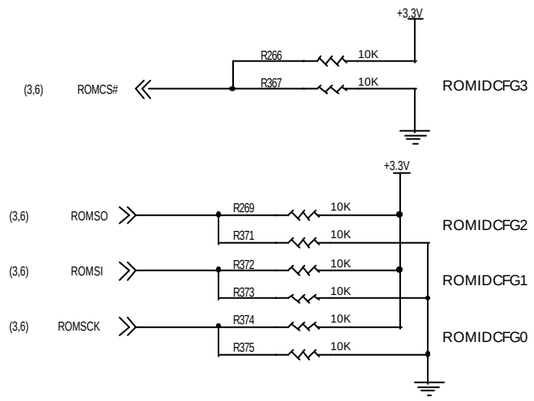

SR367	SR369	SR372	SR374	ROMIDCFG[3:0]
INSTALL	DNI	DNI	DNI	No ROM, CHG ID = 00
INSTALL	DNI	INSTALL	DNI	No ROM, CHG ID = 01
INSTALL	INSTALL	DNI	DNI	No ROM, CHG ID = 10
INSTALL	INSTALL	INSTALL	DNI	No ROM, CHG ID = 11
DNI	DNI	DNI	DNI	Parallel ROM on TVO (default)
DNI	DNI	DNI	INSTALL	Serial AT25F1024, ID's from ROM
DNI	DNI	INSTALL	DNI	Serial AT45DB011, ID's from ROM
DNI	DNI	INSTALL	INSTALL	Serial ST M25P10, ID's from ROM
DNI	INSTALL	DNI	DNI	Serial ST M25P05, ID's from ROM
DNI	INSTALL	INSTALL	DNI	Parallel ROM on DVO

* Install SR366,SR371,SR373 and SR375 when internal pull-up/down don't work pr operly.

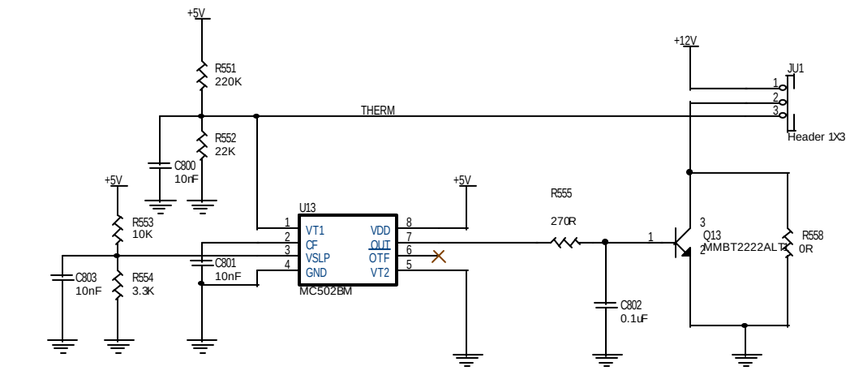

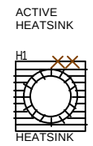

Title: HARDWARE STRAPS

Size | Document Number: R200-830 | Rev: 100

Date: Saturday, February 23, 2002 | Sheet 8 of 14

R566

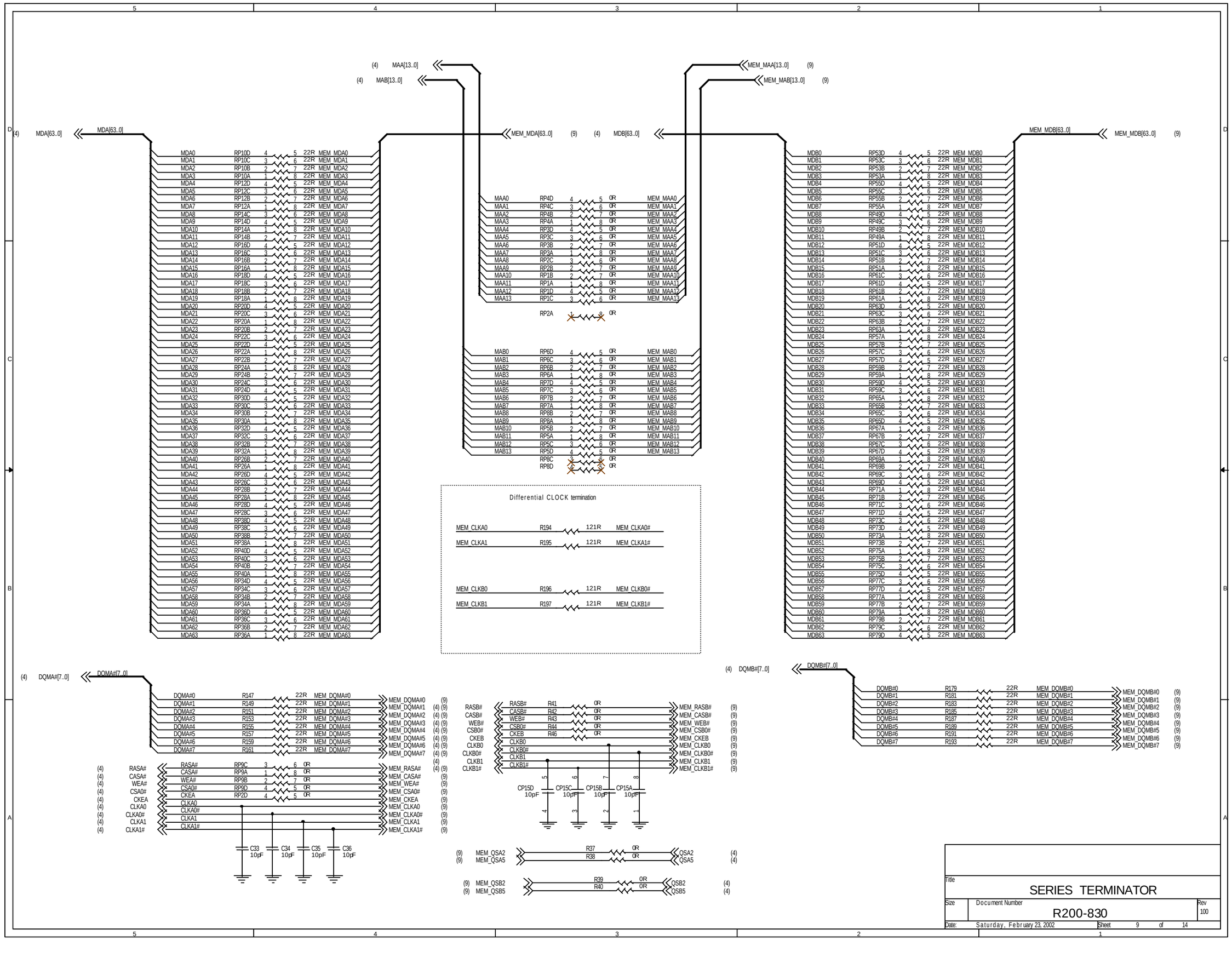

Title	SERIES TERMINATOR	
Size	Document Number R200-830	Rev 100
Date: Saturday, February 23, 2002	Sheet 9 of 14	

32/64MB DDR 2/4MX32 SGRAM

U8 / U9 / U10 / U11 — 512Kx32x4

2M X 32 DDR SGRAM
OR
4M X 32 DDR SGRAM

Pin	U8	U9	U10	U11
29	MEM_MAA13	MEM_MAA13	MEM_MAB13	MEM_MAB13
30	MEM_MAA12	MEM_MAA12	MEM_MAB12	MEM_MAB12
51	MEM_MAA8	MEM_MAA8	MEM_MAB8	MEM_MAB8
50	MEM_MAA7	MEM_MAA7	MEM_MAB7	MEM_MAB7
49	MEM_MAA6	MEM_MAA6	MEM_MAB6	MEM_MAB6
48	MEM_MAA5	MEM_MAA5	MEM_MAB5	MEM_MAB5
47	MEM_MAA4	MEM_MAA4	MEM_MAB4	MEM_MAB4
34	MEM_MAA3	MEM_MAA3	MEM_MAB3	MEM_MAB3
33	MEM_MAA2	MEM_MAA2	MEM_MAB2	MEM_MAB2
32	MEM_MAA1	MEM_MAA1	MEM_MAB1	MEM_MAB1
31	MEM_MAA0	MEM_MAA0	MEM_MAB0	MEM_MAB0
36	MEM_MAA10	MEM_MAA10	MEM_MAB10	MEM_MAB10
37	MEM_MAA11	MEM_MAA11	MEM_MAB11	MEM_MAB11
45	MEM_MAA9	MEM_MAA9	MEM_MAB9	MEM_MAB9
52	DSF,MCL	DSF,MCL	DSF,MCL	DSF,MCL
93	RFU(QS)	RFU(QS)	RFU(QS)	RFU(QS)
58	VREF	VREF	VREF	VREF
54	MEM_CLKA0#	MEM_CLKA1#	MEM_CLKB0#	MEM_CLKB1#
28	MEM_CSA0#	MEM_CSA0#	MEM_CSB0#	MEM_CSB0#
27	MEM_RASA#	MEM_RASA#	MEM_RASB#	MEM_RASB#
26	MEM_CASA#	MEM_CASA#	MEM_CASB#	MEM_CASB#
25	MEM_WEA#	MEM_WEA#	MEM_WEB#	MEM_WEB#
57	MEM_DQMA#3	MEM_DQMA#4	MEM_DQMB#3	MEM_DQMB#5
24	MEM_DQMA#0	MEM_DQMA#7	MEM_DQMB#0	MEM_DQMB#6
56	MEM_DQMA#2	MEM_DQMA#5	MEM_DQMB#2	MEM_DQMB#4
23	MEM_DQMA#1	MEM_DQMA#6	MEM_DQMB#1	MEM_DQMB#7
55	MEM_CLKA0	MEM_CLKA1	MEM_CLKB0	MEM_CLKB1
53	MEM_CKEA	MEM_CKEA	MEM_CKEB	MEM_CKEB
94	(8) MEM_QSA2	(8) MEM_QSA5	(8) MEM_QSB2	(8) MEM_QSB5
84	MEM_MDA31	MEM_MDA38	MEM_MDB30	MEM_MDB47
83	MEM_MDA30	MEM_MDA39	MEM_MDB31	MEM_MDB46
81	MEM_MDA29	MEM_MDA36	MEM_MDB28	MEM_MDB44
80	MEM_MDA28	MEM_MDA37	MEM_MDB29	MEM_MDB45
78	MEM_MDA25	MEM_MDA35	MEM_MDB27	MEM_MDB42
77	MEM_MDA24	MEM_MDA34	MEM_MDB26	MEM_MDB43
75	MEM_MDA27	MEM_MDA33	MEM_MDB25	MEM_MDB41
74	MEM_MDA26	MEM_MDA32	MEM_MDB24	MEM_MDB40
21	MEM_MDA0	MEM_MDA56	MEM_MDB0	MEM_MDB49
20	MEM_MDA1	MEM_MDA57	MEM_MDB1	MEM_MDB48
18	MEM_MDA2	MEM_MDA59	MEM_MDB2	MEM_MDB51
17	MEM_MDA3	MEM_MDA58	MEM_MDB3	MEM_MDB50
13	MEM_MDA4	MEM_MDA61	MEM_MDB4	MEM_MDB54
12	MEM_MDA5	MEM_MDA60	MEM_MDB5	MEM_MDB55
10	MEM_MDA6	MEM_MDA63	MEM_MDB6	MEM_MDB52
9	MEM_MDA7	MEM_MDA62	MEM_MDB7	MEM_MDB53
72	MEM_MDA21	MEM_MDA44	MEM_MDB22	MEM_MDB38
71	MEM_MDA20	MEM_MDA45	MEM_MDB23	MEM_MDB39
69	MEM_MDA22	MEM_MDA46	MEM_MDB20	MEM_MDB37
68	MEM_MDA23	MEM_MDA47	MEM_MDB21	MEM_MDB36
64	MEM_MDA18	MEM_MDA42	MEM_MDB18	MEM_MDB35
63	MEM_MDA19	MEM_MDA43	MEM_MDB19	MEM_MDB34
61	MEM_MDA16	MEM_MDA40	MEM_MDB17	MEM_MDB33
60	MEM_MDA17	MEM_MDA41	MEM_MDB16	MEM_MDB32
7	MEM_MDA9	MEM_MDA48	MEM_MDB8	MEM_MDB57
6	MEM_MDA8	MEM_MDA49	MEM_MDB9	MEM_MDB56
4	MEM_MDA11	MEM_MDA50	MEM_MDB10	MEM_MDB59
3	MEM_MDA10	MEM_MDA51	MEM_MDB11	MEM_MDB58
1	MEM_MDA12	MEM_MDA55	MEM_MDB12	MEM_MDB63
100	MEM_MDA13	MEM_MDA54	MEM_MDB13	MEM_MDB62
98	MEM_MDA14	MEM_MDA53	MEM_MDB14	MEM_MDB61
97	MEM_MDA15	MEM_MDA52	MEM_MDB15	MEM_MDB60

VDDQ: 2, 8, 14, 22, 59, 67, 73, 79, 86, 95
VDD: 15, 35, 65, 96
VSSQ: 5, 11, 19, 62, 70, 76, 82, 92, 99
VSS: 16, 46, 66, 85

VDDQ: C180 100nF, C181 100nF, C182 100nF, C183 100nF
VDDQ: C204 100nF, C205 100nF, C206 100nF, C207 100nF
VDDQ: C185 100nF, C186 10nF, C187 100nF, C188 10nF, C184 22uF
VDDQ: C190 100nF, C191 10nF, C192 100nF, C193 10nF, C189 22uF
VDDQ: C210 100nF, C211 10nF, C212 100nF, C213 10nF
VDDQ: C214 100nF, C215 10nF, C216 100nF, C217 10nF, C209 22uF
VDD: C195 100nF, C196 10nF, C197 100nF, C198 10nF, C194 22uF
VDD: C200 100nF, C201 10nF, C202 100nF
VDD: C220 100nF, C221 10nF
VDD: C224 100nF, C225 10nF, C226 100nF, C227 10nF, C219 22uF

(8) MEM_DQMA#0 … MEM_DQMA#7
(8) MEM_CLKA0, MEM_CLKA0#, MEM_CLKA1, MEM_CLKA1#, MEM_CKEA, MEM_RASA#, MEM_CASA#, MEM_WEA#, MEM_CSA0#
(8) MEM_MDA[63..0]
(8) MEM_MAA[13..0]
(8) MEM_DQMB#0 … MEM_DQMB#7
(8) MEM_CLKB0, MEM_CLKB0#, MEM_CLKB1, MEM_CLKB1#, MEM_CKEB, MEM_RASB#, MEM_CASB#, MEM_WEB#, MEM_CSB0#
(8) MEM_MDB[63..0]
(8) MEM_MAB[13..0]

Title	4MX32 DDR
Size	
Document Number	R200-830
Rev	100
Date:	Saturday, February 23, 2002
Sheet	10 of 14

CRT1 INTERFACE

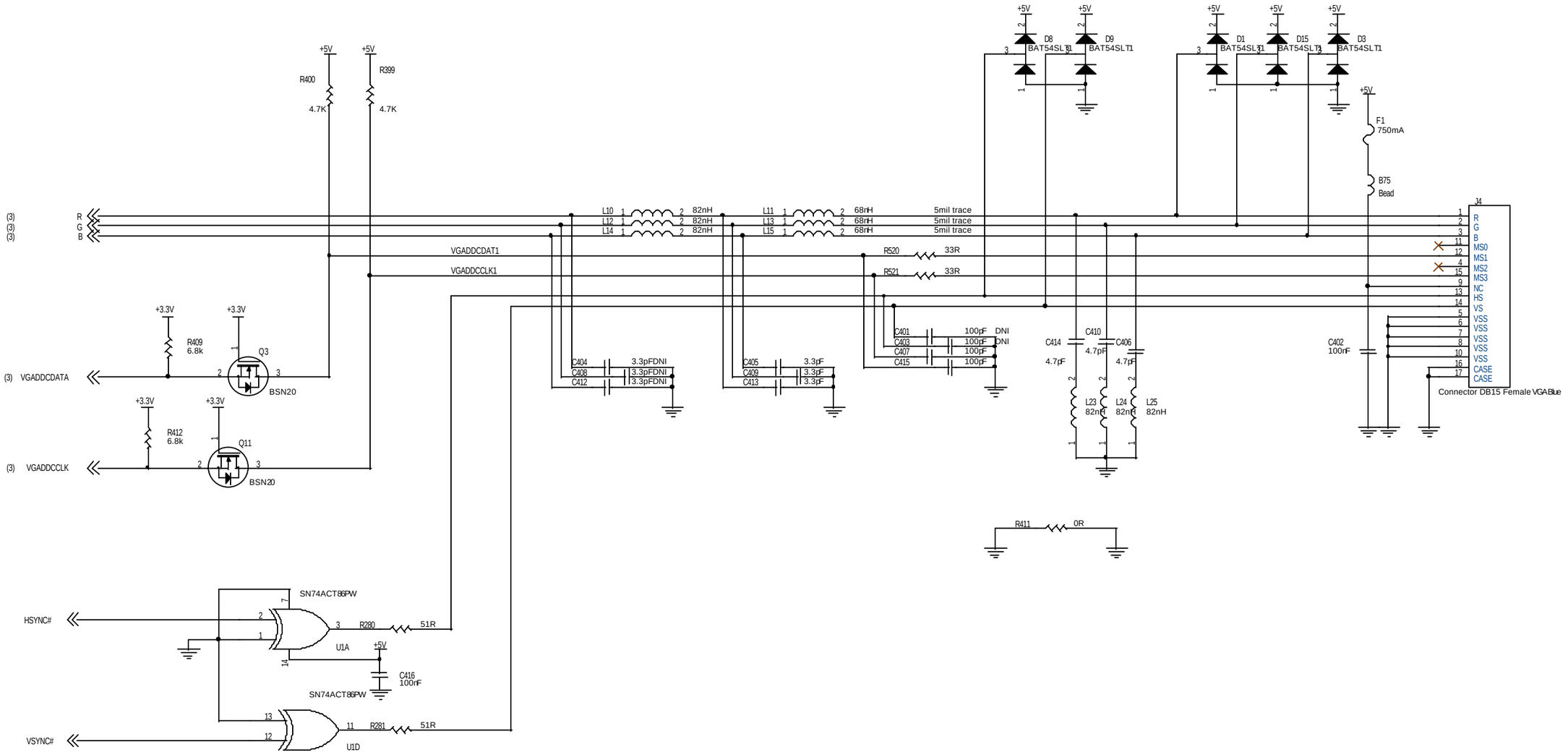

Title	CRT1		
Size	Document Number	R200-830	Rev 100
Date:	Saturday, February 23, 2002	Sheet 11 of 14	

CRT2 INTERFACE

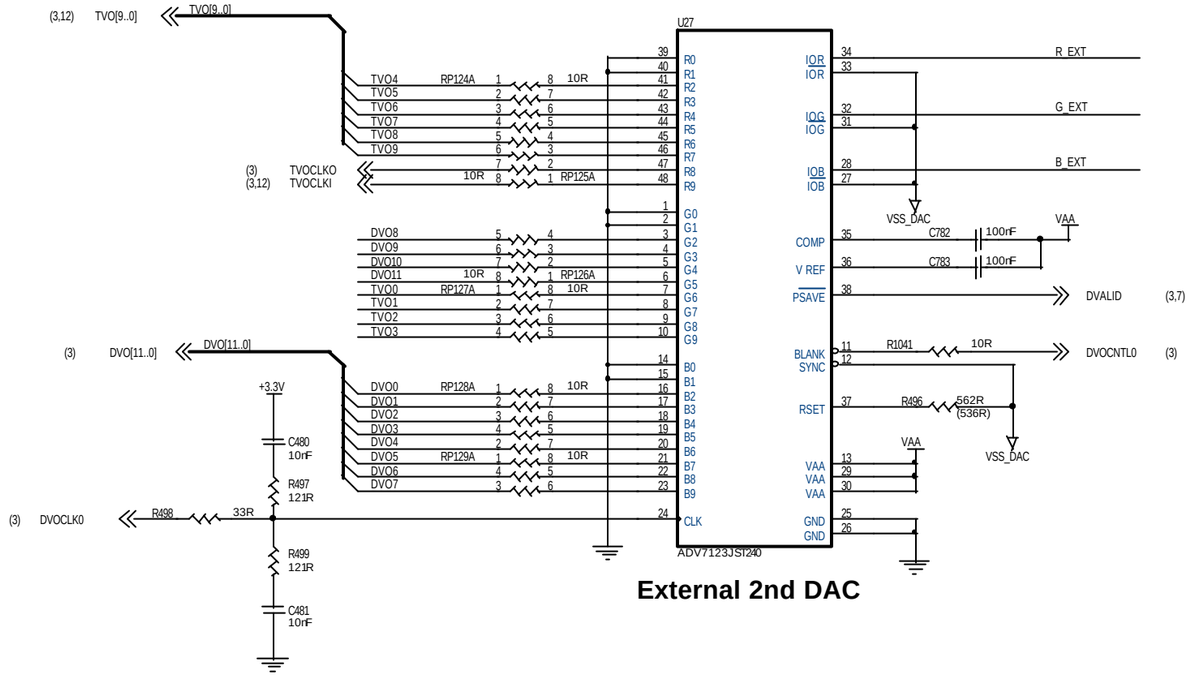

External 2nd DAC

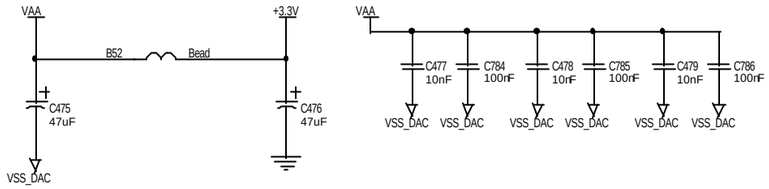

Device Detection (for external DAC)

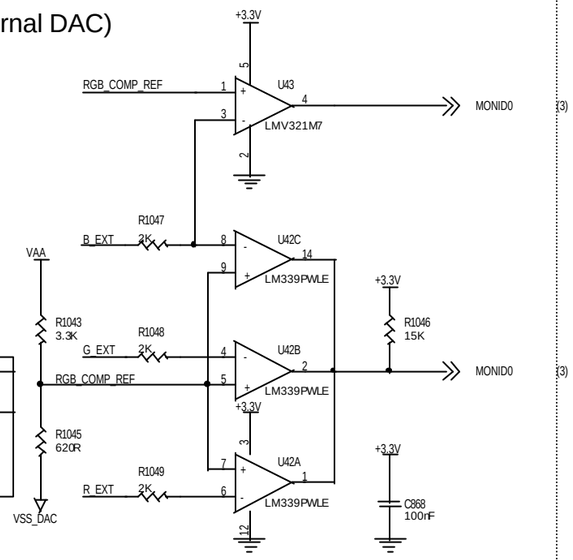

Either U43 OR U42 should be installed.

MONID0	RESULT
1	Device connected
0	Device not connected or not connected properly.

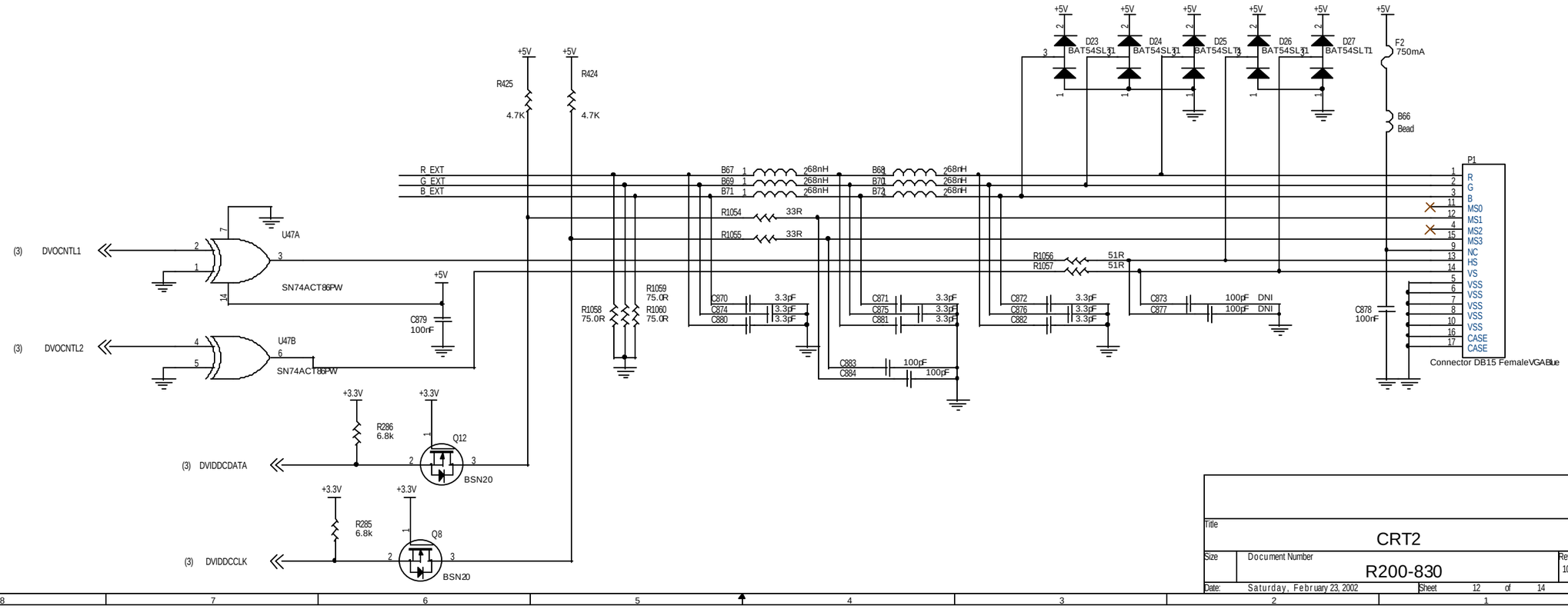

Title	CRT2		
Size	Document Number R200-830		Rev 100
Date: Saturday, February 23, 2002	Sheet 12 of 14		

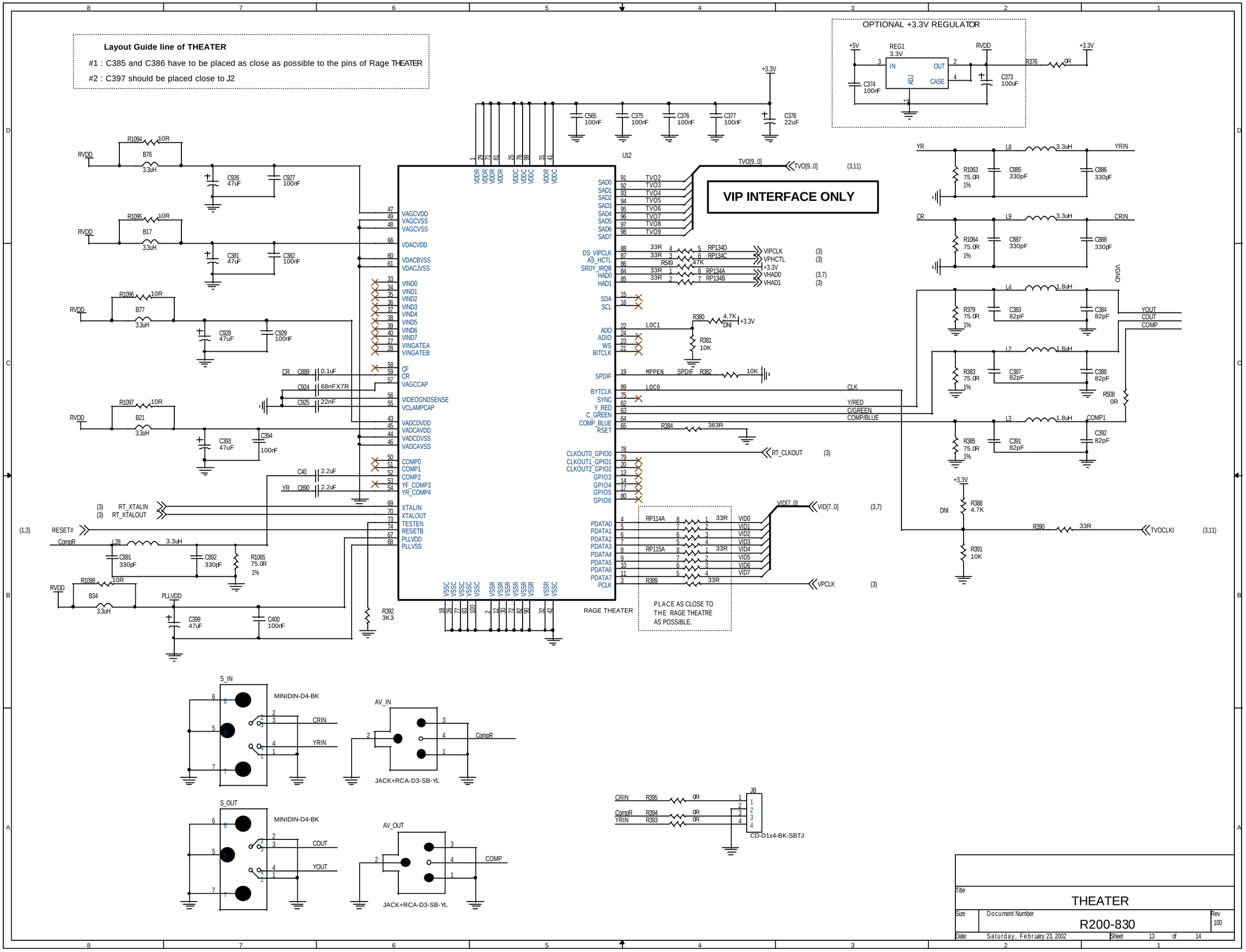

Layout Guide line of THEATER
#1 : C385 and C386 have to be placed as close as possible to the pins of Rage THEATER
#2 : C397 should be placed close to J2
OPTIONAL +3.3V REGULATOR
REG1
3.3V
IN
OUT
ADJ
CASE
VIP INTERFACE ONLY
U12
RAGE THEATER
PLACE AS CLOSE TO THE RAGE THEATRE AS POSSIBLE.
S_IN
MINIDIN-D4-BK
AV_IN
JACK+RCA-D3-SB-YL
S_OUT
AV_OUT
JB
CD-D1x4-BK-SBTJ
Title
THEATER
Size
Document Number
R200-830
Rev
100
Date: Saturday, February 23, 2002
Sheet 13 of 14

CRT SCREWS

S1

SCREW
JACKSCREW

S2

SCREW
JACKSCREW

PCB

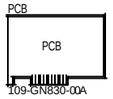

109-GN830-00A

CRT2 SCREWS

S3

SCREW
PAN HEAD

S4

SCREW
PAN HEAD

BRACKET

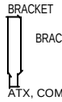

ATX, COMP, S-VID, VGA,176

Title	MECHANICAL	
Size	Document Number R200-830	Rev 100
Date: Saturday, February 23, 2002	Sheet 14 of 14	