PG132-A02

370W, FH Std PCB, 384b, GDDR6x 2CH X16
DP + DP + DP + HDMI/DP

TABLE OF CONTENTS

Page Description

1 Table of Contents
2 BLOCK DIAGRAM
3 PCI EXPRESS
4 MEMORY: GPU PARTITION A/B
5 MEMORY: FBA PARTITION[31:0]
6 MEMORY: FBA PARTITION[63:32]
7 MEMORY: FBB PARTITION[31:0]
8 MEMORY: FBB PARTITION[63:32]
9 MEMORY: GPU PARTITION C/D
10 MEMORY: FBC PARTITION[31:0]
11 MEMORY: FBC PARTITION[63:32]
12 MEMORY: FBD PARTITION[31:0]
13 MEMORY: FBD PARTITION[63:32]
14 MEMORY: GPU PARTITION E/F
15 MEMORY: FBE PARTITION[31:0]
16 MEMORY: FBE PARTITION[63:32]
17 MEMORY: FBF PARTITION[31:0]
18 MEMORY: FBF PARTITION[63:32]
19 GPU GND, RFUs & RSVD
20 GPU POWERS
21 GPU DECOUPLING NVVDD
22 GPU DECOUPLING FBVDDQ
23 GPU DECOUPLING MSVDD
24 BLANK
25 NVHS x16

Page Description

26 MISC: THERMAL, JTAG, GPIO
27 IFPA UNUSED, IFPB UNUSED
28 IFPE DP
29 IFPD DP
30 IFPC HDMI/DP
31 IFPF DP
32 MISC. ROM, STRAPS
33 MISC. XTAL, PLL
34 PS: 5V
35 PS: PEX_DVDD and 1V8
36 BLANK
37 PS: FBVDD Controller OVR3
38 PS: FBVDDQ OVR4
39 PS: FBVDD PH1
40 PS: FBVDD PH3
41 PS: FBVDD PH2
42 PS: FBVDD PH4
43 PS: FBVDD OUTPUT CAP
44 PS: FBVDD_OUTPUT_CAP_NEAR_MEMORY
45 PS: MSVDD CONTROLLER
46 PS: MSVDD PH1
47 PS: MSVDD PH2
48 PS: MSVDD PH3 and PH5
49 PS: MSVDD PH4 and PH6
50 PS: MSVDD OUTPUT CAP(TOP)

Page Description

51 BLANK
52 PS: NVVDD Controller_OVR8
53 PS: NVVDD PH1 (PWM1)
54 PS: NVVDD PH2(PWM6)
55 PS: NVVDD PH3 (PWM3) and PH4 (PWM3)
56 PS: NVVDD PH5(PWM7) and PH7(PWM8)
57 PS: NVVDD PH6 (PWM7)
58 PS: NVVDD PH8(PWM5) and PH9(PWM2)
59 PS: NVVDD PH10 (PWM4)
60 Colayout_Notes
61 History
62 PS: NVVDD OUTPUT CAP(TOP)
63 BLANK
64 PS: INPUT SWITCH RTD3
65 BLANK
66 PS: INPUTS, FILTERING, and, MONITORING
67 PS: HOT UNPLUG
68 PS: Discrete Power Steering
69 PS: PREFILTER
70 PS: PREFILTER B
71 Sequence: 5V, 1V8, 3V3_SEQ
72 Sequence: NV, PEX, FB EN
73 Sequence: 3V3 MONITOR
74 Sequence: MISC
75 MISC: LED & FAN
76 MISC: RGBW LED REF
77 Mechanical: Mounting holes
78 VR THERMAL PROTECTION
79 PCI TERM

MICRO-STAR INT'L CO.,LTD		
MS-V389		
Size Custom	Document Description TABLE OF CONTENTS	Rev 1.1
Date: Thursday, July 23, 2020	Sheet 1 of 76	

Block Diagram

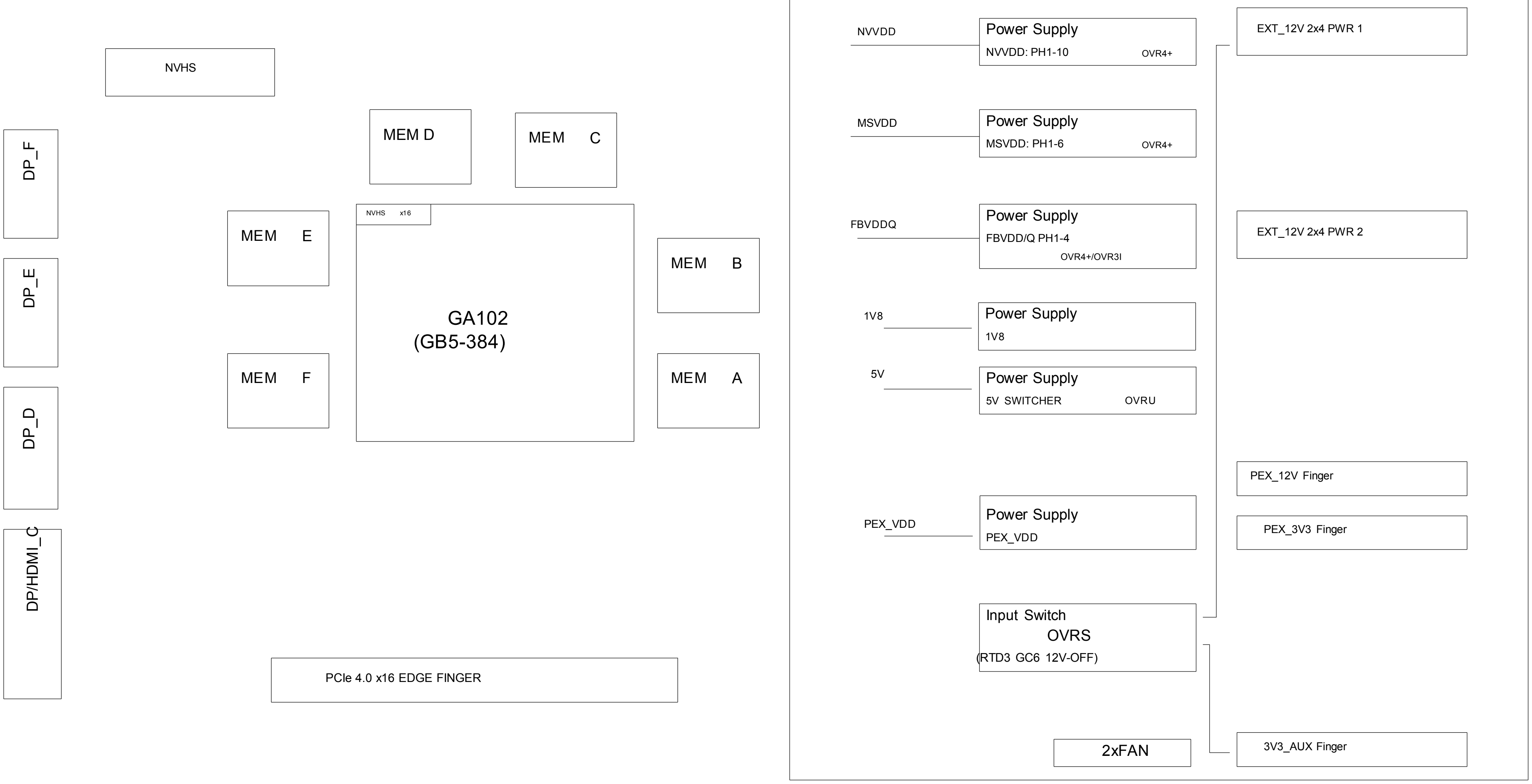
NVHS
DP_F
DP_E
DP_D
DP/HDMI_C
MEM D
MEM C
MEM E
MEM B
MEM F
MEM A
NVHS x16
GA102
(GB5-384)
PCIe 4.0 x16 EDGE FINGER
NVVDD
Power Supply
NVVDD: PH1-10
OVR4+
MSVDD
Power Supply
MSVDD: PH1-6
OVR4+
FBVDDQ
Power Supply
FBVDD/Q PH1-4
OVR4+/OVR3I
1V8
Power Supply
1V8
5V
Power Supply
5V SWITCHER
OVRU
PEX_VDD
Power Supply
PEX_VDD
Input Switch
OVRS
(RTD3 GC6 12V-OFF)
2xFAN
EXT_12V 2x4 PWR 1
EXT_12V 2x4 PWR 2
PEX_12V Finger
PEX_3V3 Finger
3V3_AUX Finger

PCI Express

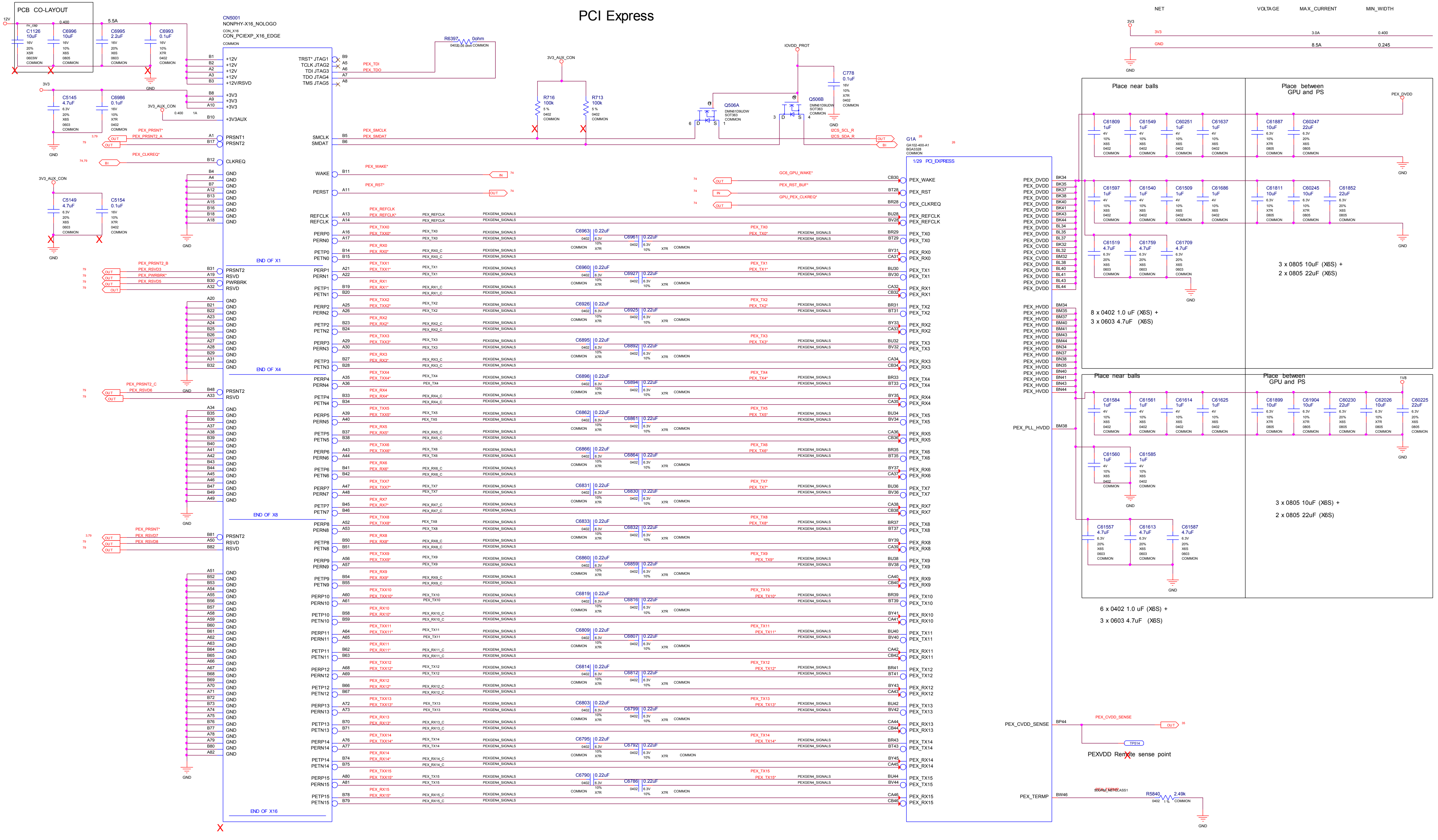
PCB CO-LAYOUT
12V
5.5A
C1126 10uF
C6996 10uF
C6995 2.2uF
C6993 0.1uF
3V3
C5145 4.7uF
C6986 0.1uF
3V3_AUX_CON
C5149 4.7uF
C5154 0.1uF
CN5001
NONPHY-X16_NOLOGO
CON_PCIEXP_X16_EDGE
+12V
+12V/RSVD
+3V3
+3V3AUX
PRSNT1
PRSNT2
CLKREQ
GND
TRST* JTAG1
TCLK JTAG2
TDI JTAG3
TDO JTAG4
TMS JTAG5
SMCLK
SMDAT
WAKE
PERST
REFCLK
PWRBRK
RSVD
END OF X1
END OF X4
END OF X8
END OF X16
R6397 0ohm
PEX_TDI
PEX_TDO
PEX_SMCLK
PEX_SMDAT
R716 100k
R713 100k
IOVDD_PROT
Q506A
Q506B
C778 0.1uF
I2CS_SCL_R
I2CS_SDA_R
PEX_WAKE*
PEX_RST*
PEX_REFCLK
PEX_REFCLK*
GC6_GPU_WAKE*
PEX_RST_BUF*
GPU_PEX_CLKREQ*
G1A
1/29 PCI_EXPRESS
PEX_WAKE
PEX_RST
PEX_CLKREQ
PEX_REFCLK
PEX_TX0 … PEX_TX15
PEX_RX0 … PEX_RX15
PERP0 … PERP15
PERN0 … PERN15
PETP0 … PETP15
PETN0 … PETN15
PEXGEN4_SIGNALS
0.22uF
PEX_DVDD
PEX_HVDD
PEX_PLL_HVDD
PEX_CVDD_SENSE
PEX_TERMP
PEXVDD Remote sense point
R5840 2.49k
Place near balls
Place between GPU and PS
8 x 0402 1.0 uF (X6S) +
3 x 0603 4.7uF (X6S)
3 x 0805 10uF (X6S) +
2 x 0805 22uF (X6S)
6 x 0402 1.0 uF (X6S) +
3 x 0603 4.7uF (X6S)
1V8
GND

NET	VOLTAGE	MAX_CURRENT	MIN_WIDTH
3V3		3.0A	0.400
GND		8.5A	0.245

MICRO-STAR INT'L CO.,LTD

MS-V389

Size: Custom
Document Description: PCI Express
Rev: 1.1
Date: Thursday, July 23, 2020
Sheet 3 of 76

MEMORY: GPU Partition A/B

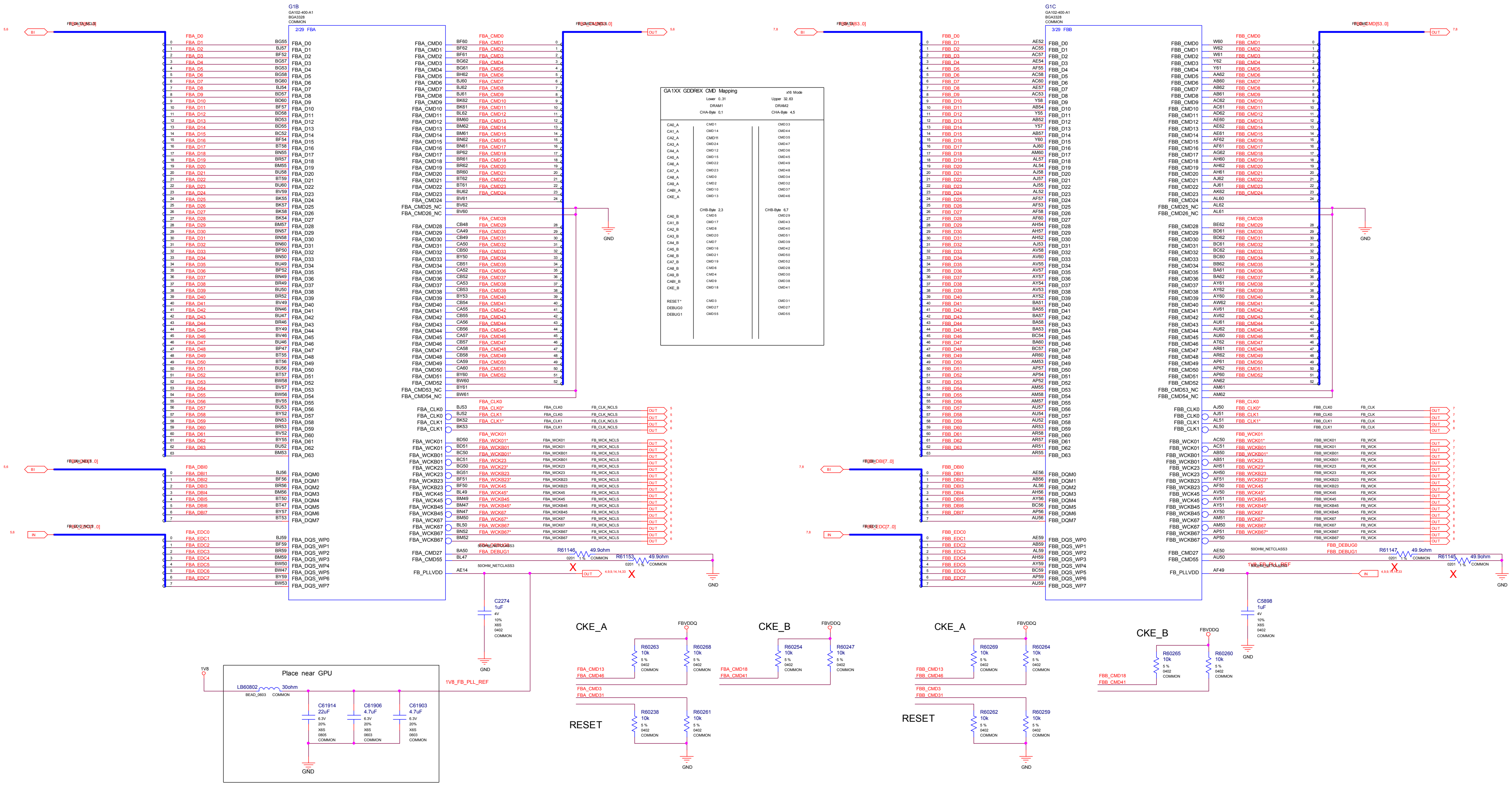
G1B
GA102-400-A1
BGA3328
COMMON
2/29 FBA
FBA_D[63..0]
FBA_CMD[53..0]
FBA_DBI[7..0]
FBA_EDC[7..0]
BI
OUT
IN
GND
FBA_CLK0
FBA_CLK1
FBA_WCK01
FBA_WCKB01
FBA_WCK23
FBA_WCKB23
FBA_WCK45
FBA_WCKB45
FBA_WCK67
FBA_WCKB67
FBA_DEBUG0
FBA_DEBUG1
50OHM_NETCLASS3
R61146
49.9ohm
R61153
49.9ohm
0201
1 %
COMMON
FB_PLLVDD
AE14
4,9,9,14,14,33
C2274
1uF
4V
10%
X6S
0402
COMMON
1V8
Place near GPU
LB60802
30ohm
BEAD_0603
C61914
22uF
6.3V
20%
X6S
0805
C61906
4.7uF
0603
C61903
4.7uF
1V8_FB_PLL_REF
CKE_A
FBVDDQ
R60263
10k
R60268
10k
5 %
0402
FBA_CMD13
FBA_CMD46
CKE_B
R60254
10k
R60247
10k
FBA_CMD18
FBA_CMD41
FBA_CMD3
FBA_CMD31
RESET
R60238
10k
R60261
10k
G1C
GA102-400-A1
BGA3328
COMMON
3/29 FBB
FBB_D[63..0]
FBB_CMD[53..0]
FBB_DBI[7..0]
FBB_EDC[7..0]
FBB_DEBUG0
FBB_DEBUG1
R61147
49.9ohm
R61145
49.9ohm
AF49
C5898
1uF
4V
10%
X6S
0402
COMMON
CKE_A
FBVDDQ
R60269
10k
R60264
10k
FBB_CMD13
FBB_CMD46
CKE_B
R60265
10k
R60260
10k
FBB_CMD18
FBB_CMD41
FBB_CMD3
FBB_CMD31
RESET
R60262
10k
R60259
10k

GA1XX GDDR6X CMD Mapping

x16 Mode

	Lower 0..31 DRAM1 CHA-Byte 0,1	Upper 32..63 DRAM2 CHA-Byte 4,5
CA0_A	CMD1	CMD33
CA1_A	CMD14	CMD44
CA2_A	CMD11	CMD35
CA3_A	CMD24	CMD47
CA4_A	CMD12	CMD36
CA5_A	CMD15	CMD45
CA6_A	CMD22	CMD49
CA7_A	CMD23	CMD48
CA8_A	CMD0	CMD34
CA9_A	CMD2	CMD32
CABI_A	CMD10	CMD37
CKE_A	CMD13	CMD46
	CHB-Byte 2,3	CHB-Byte 6,7
CA0_B	CMD5	CMD29
CA1_B	CMD17	CMD43
CA2_B	CMD8	CMD40
CA3_B	CMD20	CMD51
CA4_B	CMD7	CMD39
CA5_B	CMD16	CMD42
CA6_B	CMD21	CMD50
CA7_B	CMD19	CMD52
CA8_B	CMD6	CMD28
CA9_B	CMD4	CMD30
CABI_B	CMD9	CMD38
CKE_B	CMD18	CMD41
RESET*	CMD3	CMD31
DEBUG0	CMD27	CMD27
DEBUG1	CMD55	CMD55

MICRO-STAR INT'L CO.,LTD

MS-V389

Size	Document Description	Rev
Custom	MEMORY: GPU Partition A/B	1.1

Date: Thursday, July 23, 2020

MEMORY: FBA Partition 31..0

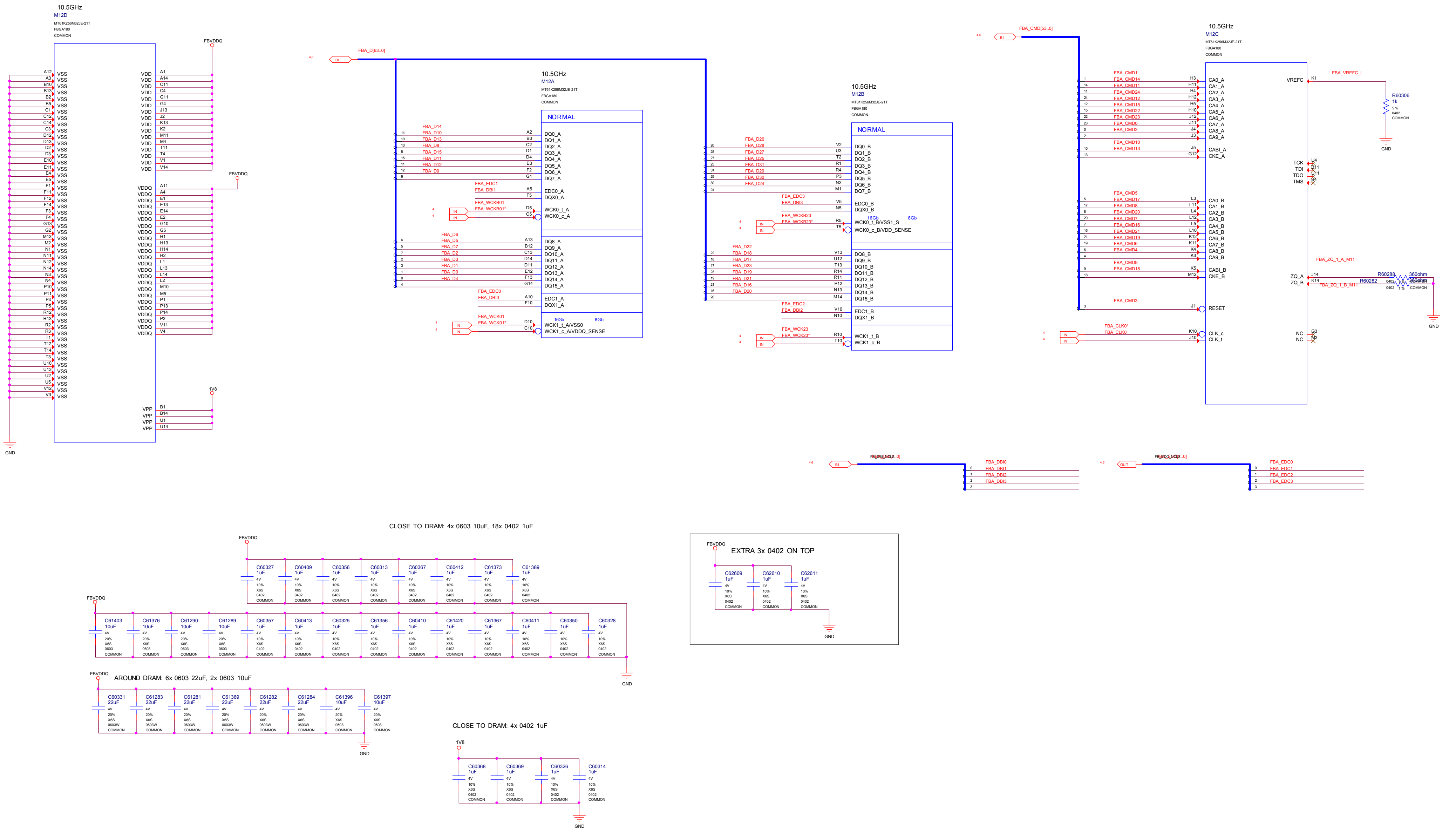
10.5GHz
M12D
MT61K256M32JE-21T
FBGA180
COMMON
VSS
VDD
VDDQ
VPP
FBVDDQ
1V8
GND
10.5GHz
M12A
NORMAL
FBA_D[63..0]
DQ0_A
DQ1_A
DQ2_A
DQ3_A
DQ4_A
DQ5_A
DQ6_A
DQ7_A
EDC0_A
DQX0_A
WCK0_t_A
WCK0_c_A
DQ8_A
DQ9_A
DQ10_A
DQ11_A
DQ12_A
DQ13_A
DQ14_A
DQ15_A
EDC1_A
DQX1_A
WCK1_t_A/VSS0
WCK1_c_A/VDDQ_SENSE
16Gb
8Gb
10.5GHz
M12B
NORMAL
DQ0_B
DQ1_B
DQ2_B
DQ3_B
DQ4_B
DQ5_B
DQ6_B
DQ7_B
EDC0_B
DQX0_B
WCK0_t_B/VSS1_S
WCK0_c_B/VDD_SENSE
DQ8_B
DQ9_B
DQ10_B
DQ11_B
DQ12_B
DQ13_B
DQ14_B
DQ15_B
EDC1_B
DQX1_B
WCK1_t_B
WCK1_c_B
FBA_CMD[53..0]
10.5GHz
M12C
CA0_A
CA1_A
CA2_A
CA3_A
CA4_A
CA5_A
CA6_A
CA7_A
CA8_A
CA9_A
CABI_A
CKE_A
CA0_B
CA1_B
CA2_B
CA3_B
CA4_B
CA5_B
CA6_B
CA7_B
CA8_B
CA9_B
CABI_B
CKE_B
RESET
CLK_c
CLK_t
VREFC
FBA_VREFC_L
R60306
1k
TCK
TDI
TDO
TMS
ZQ_A
ZQ_B
FBA_ZQ_1_A_M11
FBA_ZQ_1_B_M11
R60288
R60282
360ohm
NC
FBA_DBI[3..0]
FBA_DBI0
FBA_DBI1
FBA_DBI2
FBA_DBI3
FBA_EDC[3..0]
FBA_EDC0
FBA_EDC1
FBA_EDC2
FBA_EDC3
CLOSE TO DRAM: 4x 0603 10uF, 18x 0402 1uF
AROUND DRAM: 6x 0603 22uF, 2x 0603 10uF
CLOSE TO DRAM: 4x 0402 1uF
EXTRA 3x 0402 ON TOP
C60327
C60409
C60356
C60313
C60367
C60412
C61373
C61389
C61403
C61376
C61290
C61289
C60357
C60413
C60325
C61356
C60410
C61420
C61367
C60411
C60350
C60328
C60331
C61283
C61281
C61369
C61282
C61284
C61396
C61397
C60368
C60369
C60326
C60314
C62609
C62610
C62611
10uF
1uF
22uF
4V
10%
20%
X6S
0402
0603
0603W
COMMON

MICRO-STAR INT'L CO.,LTD		
MS-V389		
Size Custom	Document Description MEMORY: FBA Partition 31..0	Rev 1.1
Date: Thursday, July 23, 2020	Sheet 5 of 76	

MEMORY: FBA Partition 63..32

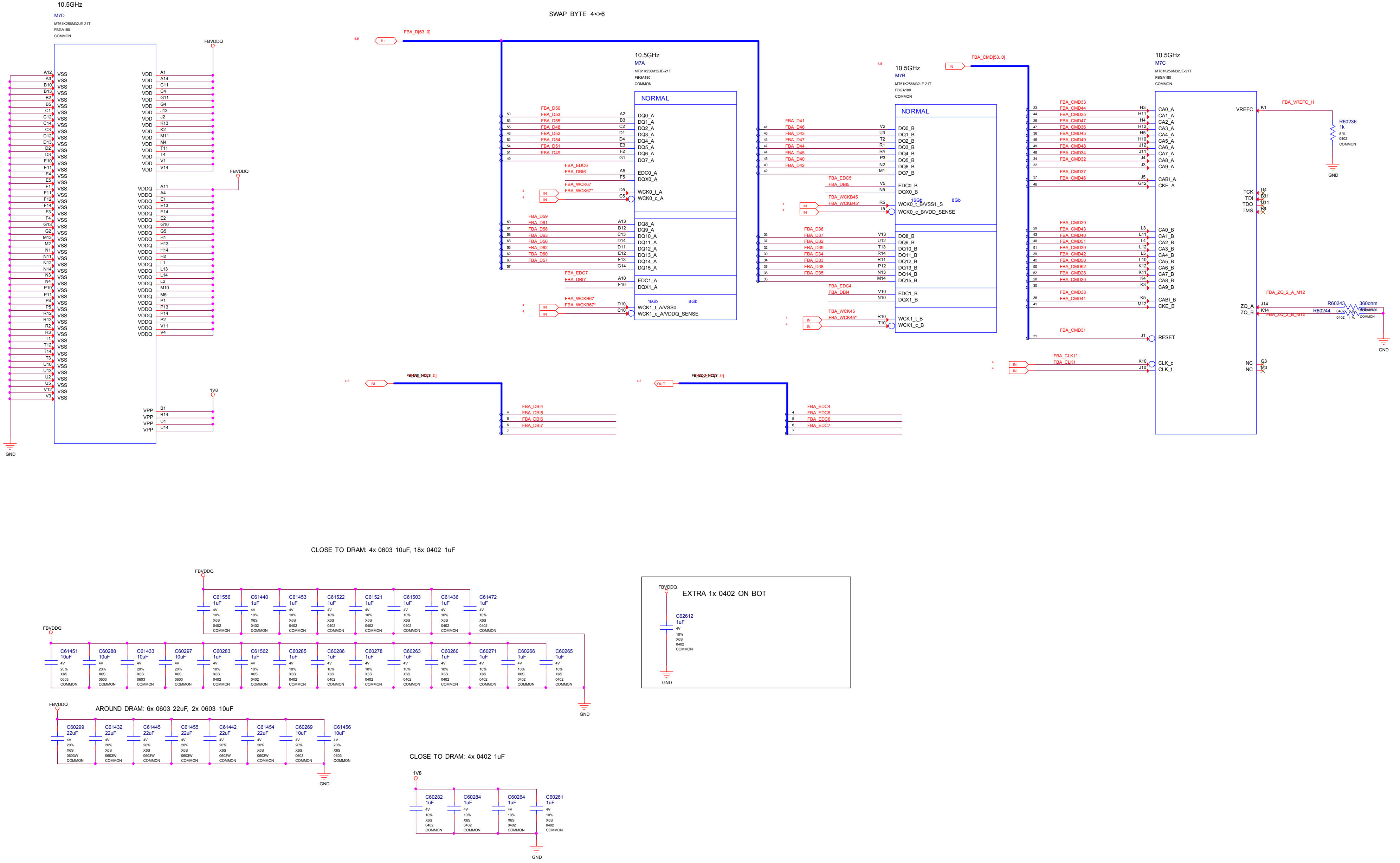
10.5GHz
M7D
MT61K256M32JE-21T
FBGA180
COMMON
FBVDDQ
VSS
VDD
VDDQ
VPP
1V8
GND
SWAP BYTE 4<>6
FBA_D[63..0]
BI
10.5GHz
M7A
NORMAL
DQ0_A
DQ7_A
EDC0_A
DQX0_A
WCK0_t_A
WCK0_c_A
DQ8_A
DQ15_A
EDC1_A
DQX1_A
WCK1_t_A/VSS0
WCK1_c_A/VDDQ_SENSE
16Gb
8Gb
10.5GHz
M7B
NORMAL
DQ0_B
DQ7_B
EDC0_B
DQX0_B
WCK0_t_B/VSS1_S
WCK0_c_B/VDD_SENSE
DQ8_B
DQ15_B
EDC1_B
DQX1_B
WCK1_t_B
WCK1_c_B
FBA_CMD[53..0]
IN
10.5GHz
M7C
CA0_A
CA9_A
CABI_A
CKE_A
CA0_B
CA9_B
CABI_B
CKE_B
RESET
CLK_c
CLK_t
VREFC
FBA_VREFC_H
R60236
1k
TCK
TDI
TDO
TMS
ZQ_A
ZQ_B
FBA_ZQ_2_A_M12
FBA_ZQ_2_B_M12
R60243
R60244
360ohm
NC
FBA_CLK1*
FBA_CLK1
FBA_DBI4
FBA_DBI5
FBA_DBI6
FBA_DBI7
OUT
FBA_EDC4
FBA_EDC5
FBA_EDC6
FBA_EDC7
CLOSE TO DRAM: 4x 0603 10uF, 18x 0402 1uF
C61556
C61440
C61453
C61522
C61521
C61503
C61436
C61472
C61451
C60288
C61433
C60297
C60283
C61562
C60285
C60286
C60278
C60263
C60260
C60271
C60266
C60265
AROUND DRAM: 6x 0603 22uF, 2x 0603 10uF
C60299
C61432
C61445
C61455
C61442
C61454
C60269
C61456
EXTRA 1x 0402 ON BOT
C62612
CLOSE TO DRAM: 4x 0402 1uF
C60282
C60284
C60264
C60261

MICRO-STAR INT'L CO.,LTD

MS-V389

Size Custom

Document Description MEMORY: FBA Partition 63..32

Rev 1.1

Date: Thursday, July 23, 2020

Sheet 6 of 76

MEMORY: FBB Partition 31..0

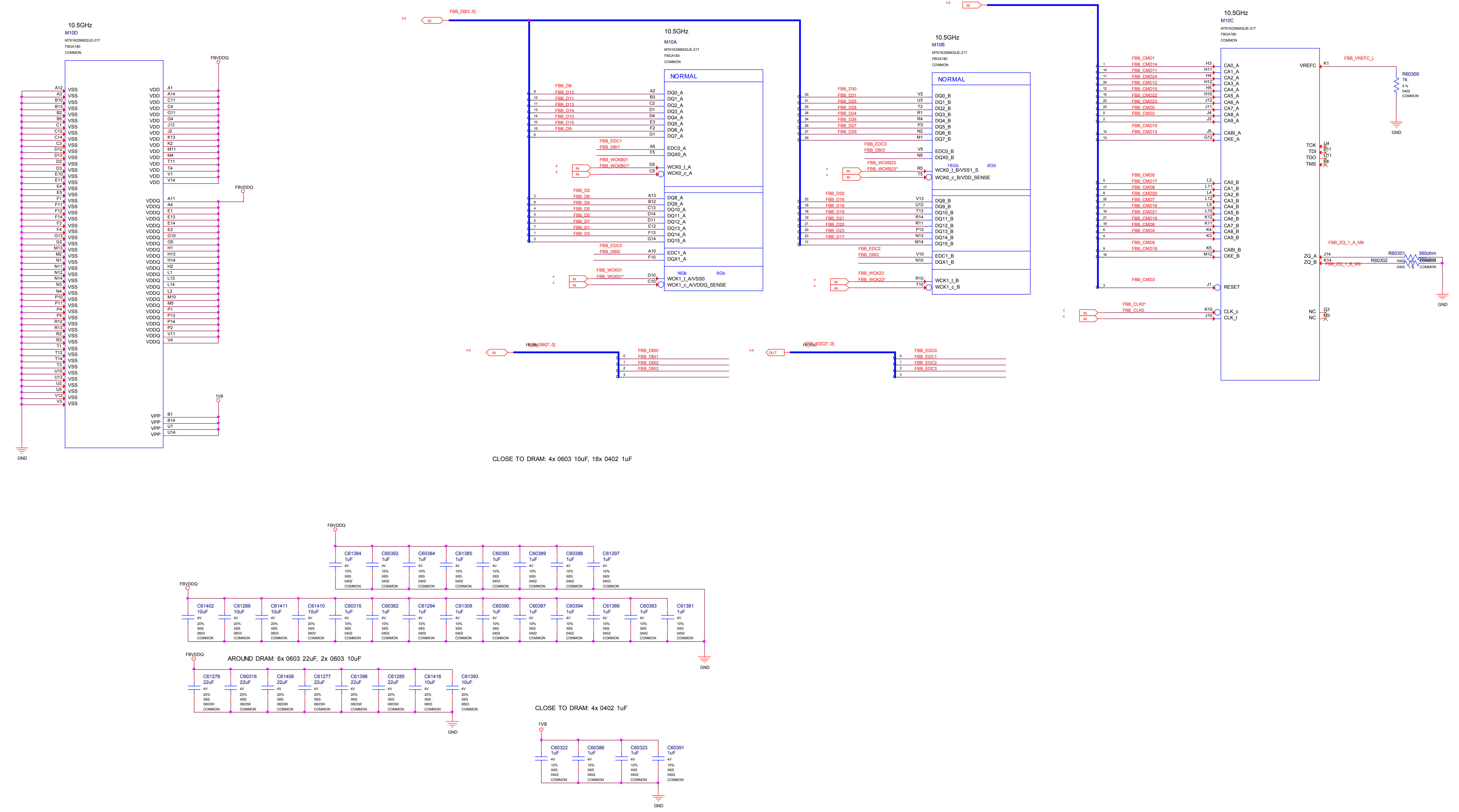
10.5GHz
M10D
MT61K256M32JE-21T
FBGA180
COMMON
M10A
M10B
M10C
NORMAL
FBVDDQ
1V8
GND
FBB_D[63..0]
FBB_CMD[53..0]
FBB_DBI[7..0]
FBB_EDC[7..0]
FBB_VREFC_L
FBB_ZQ_1_A_M9
FBB_CLK0
FBB_CLK0*
FBB_WCKB01
FBB_WCKB01*
FBB_WCK01
FBB_WCK01*
FBB_WCKB23
FBB_WCKB23*
FBB_WCK23
FBB_WCK23*
R60300 1k
R60301 360ohm
R60302
VSS
VDD
VDDQ
VPP
VREFC
ZQ_A
ZQ_B
TCK
TDI
TDO
TMS
RESET
CLK_c
CLK_t
NC
CLOSE TO DRAM: 4x 0603 10uF, 18x 0402 1uF
AROUND DRAM: 6x 0603 22uF, 2x 0603 10uF
CLOSE TO DRAM: 4x 0402 1uF

MICRO-STAR INT'L CO.,LTD

MS-V389

Size	Document Description	Rev
Custom	MEMORY: FBB Partition 31..0	1.1

Date: Thursday, July 23, 2020 Sheet 7 of 76

MEMORY: FBB Partition 63..32

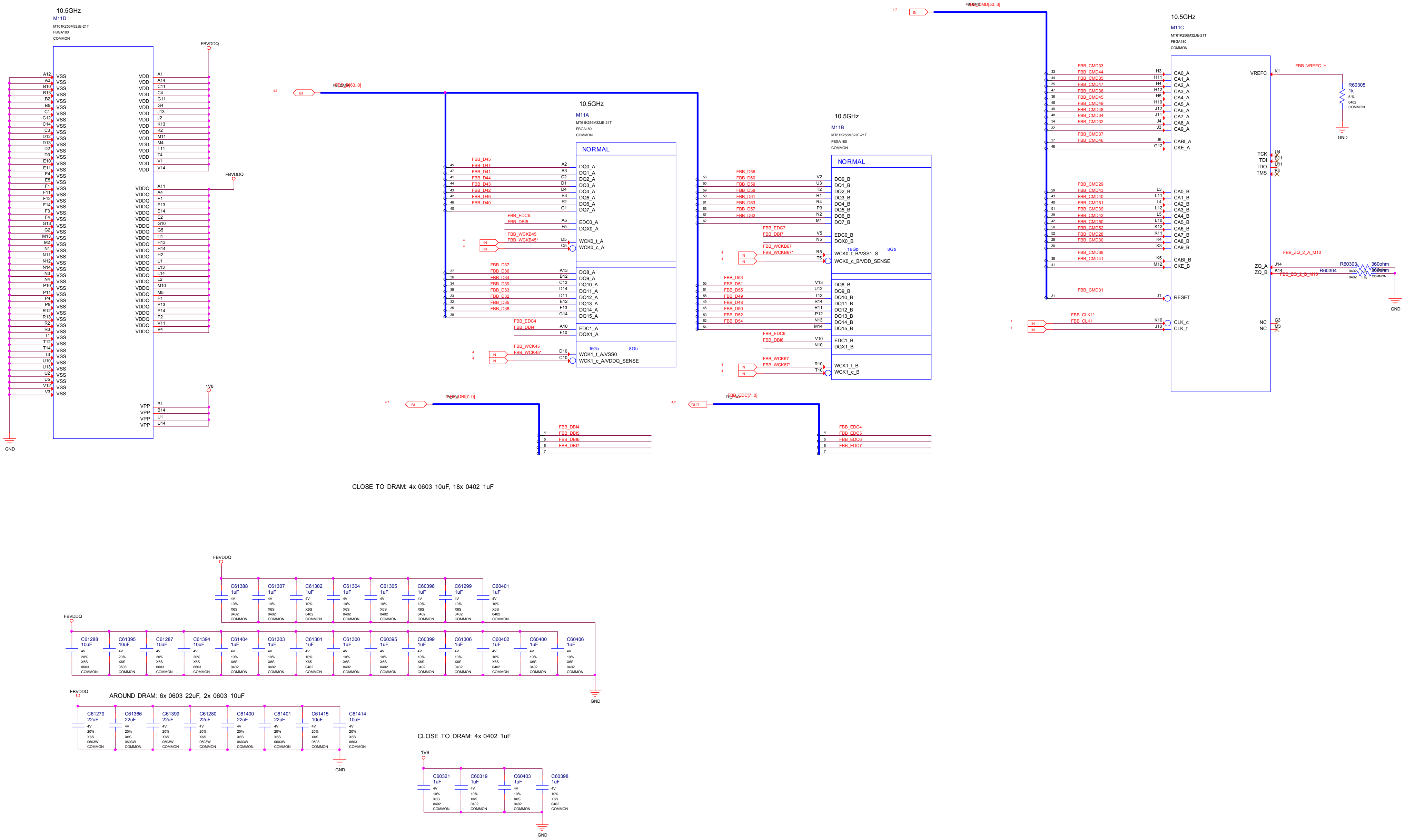
10.5GHz
M11D
MT61K256M32JE-21T
FBGA180
COMMON
VSS
VDD
VDDQ
VPP
FBVDDQ
1V8
GND
M11A
NORMAL
DQ0_A
DQ1_A
DQ2_A
DQ3_A
DQ4_A
DQ5_A
DQ6_A
DQ7_A
EDC0_A
DQX0_A
WCK0_t_A
WCK0_c_A
DQ8_A
DQ9_A
DQ10_A
DQ11_A
DQ12_A
DQ13_A
DQ14_A
DQ15_A
EDC1_A
DQX1_A
16Gb
8Gb
WCK1_t_A/VSS0
WCK1_c_A/VDDQ_SENSE
M11B
DQ0_B
DQ1_B
DQ2_B
DQ3_B
DQ4_B
DQ5_B
DQ6_B
DQ7_B
EDC0_B
DQX0_B
WCK0_t_B/VSS1_S
WCK0_c_B/VDD_SENSE
DQ8_B
DQ9_B
DQ10_B
DQ11_B
DQ12_B
DQ13_B
DQ14_B
DQ15_B
EDC1_B
DQX1_B
WCK1_t_B
WCK1_c_B
M11C
CA0_A
CA1_A
CA2_A
CA3_A
CA4_A
CA5_A
CA6_A
CA7_A
CA8_A
CA9_A
CABI_A
CKE_A
CA0_B
CA1_B
CA2_B
CA3_B
CA4_B
CA5_B
CA6_B
CA7_B
CA8_B
CA9_B
CABI_B
CKE_B
RESET
CLK_c
CLK_t
VREFC
TCK
TDI
TDO
TMS
ZQ_A
ZQ_B
NC
FBB_VREFC_H
R60305
1k
FBB_ZQ_2_A_M10
FBB_ZQ_2_B_M10
R60303
R60304
360ohm
FBB_CMD[53..0]
FBB_D[63..0]
FBB_DBI[7..0]
FBB_EDC[7..0]
FBB_CLK1*
FBB_CLK1
FBB_CMD31
FBB_WCK45
FBB_WCK45*
FBB_WCK67
FBB_WCK67*
FBB_DBI4
FBB_DBI5
FBB_DBI6
FBB_DBI7
FBB_EDC4
FBB_EDC5
FBB_EDC6
FBB_EDC7
BI
IN
OUT
C61388
C61307
C61302
C61304
C61305
C60396
C61299
C60401
C61288
C61395
C61287
C61394
C61404
C61303
C61301
C61300
C60395
C60399
C61306
C60402
C60400
C60406
C61279
C61366
C61399
C61280
C61400
C61401
C61415
C61414
C60321
C60319
C60403
C60398
1uF
10uF
22uF
4V
10%
20%
X6S
0402
0603
0603W

CLOSE TO DRAM: 4x 0603 10uF, 18x 0402 1uF

AROUND DRAM: 6x 0603 22uF, 2x 0603 10uF

CLOSE TO DRAM: 4x 0402 1uF

MICRO-STAR INT'L CO.,LTD

MS-V389

Size	Document Description	Rev
Custom	MEMORY: FBB Partition 63..32	1.1
Date: Thursday, July 23, 2020	Sheet 8 of 76	

MEMORY: GPU Partition C/D

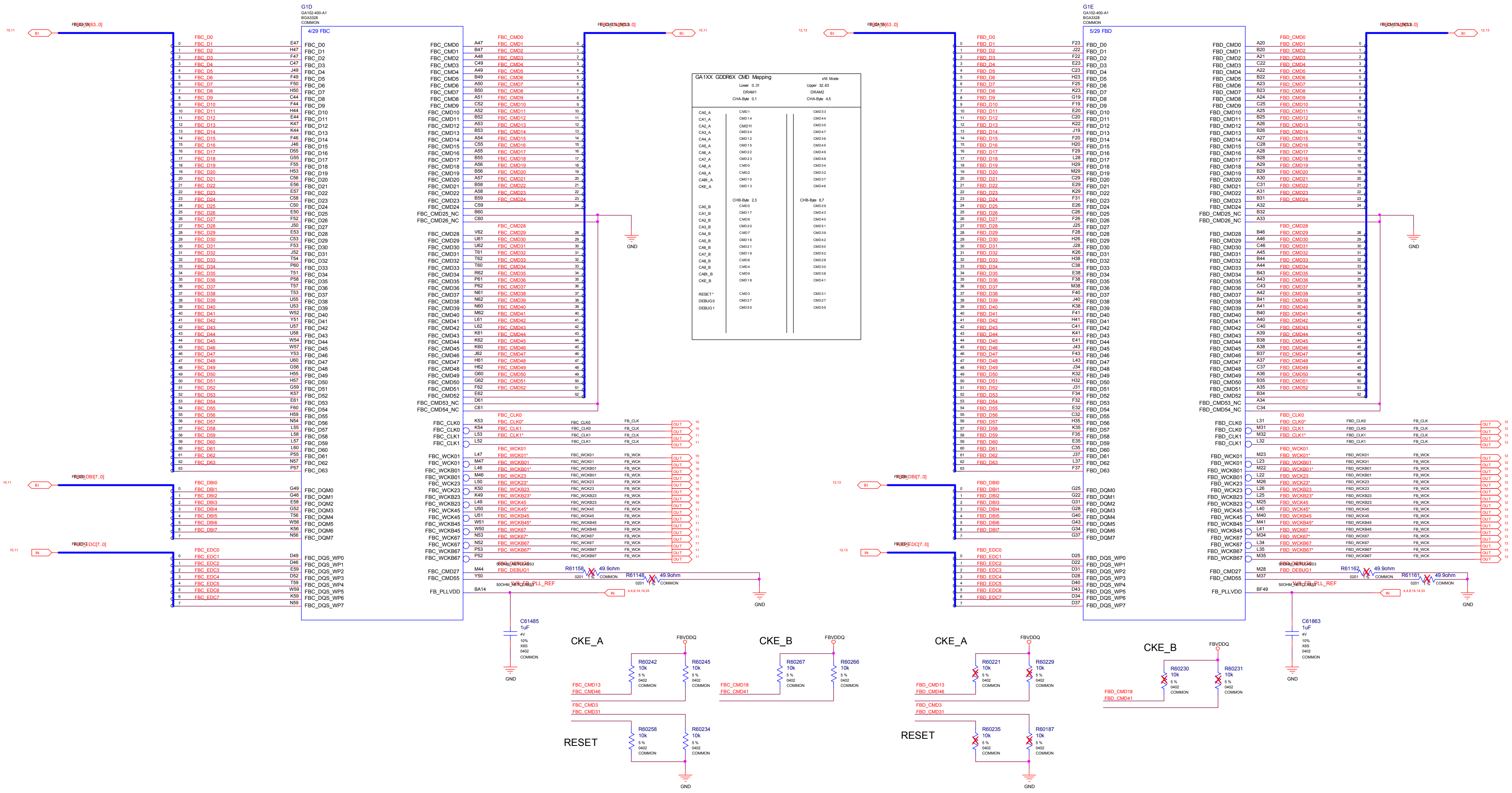
G1D
GA102-400-A1
BGA3328
COMMON
4/29 FBC
G1E
GA102-400-A1
BGA3328
COMMON
5/29 FBD
GA1XX GDDR6X CMD Mapping
x16 Mode
CKE_A
CKE_B
RESET
FBVDDQ
GND
FB_PLLVDD
FBC_D[63..0]
FBC_CMD[52..0]
FBC_DBI[7..0]
FBC_EDC[7..0]
FBD_D[63..0]
FBD_CMD[52..0]
FBD_DBI[7..0]
FBD_EDC[7..0]
C61485
1uF
C61863
1uF
R61158
R61148
R61162
R61161
49.9ohm
R60242
R60245
R60267
R60266
R60258
R60234
R60221
R60229
R60230
R60231
R60235
R60187
10k

MICRO-STAR INT'L CO.,LTD

MS-V389

Size: Custom
Document Description: MEMORY: GPU Partition C/D
Rev: 1.1
Date: Thursday, July 23, 2020
Sheet 9 of 76

MEMORY: FBC Partition 31..0

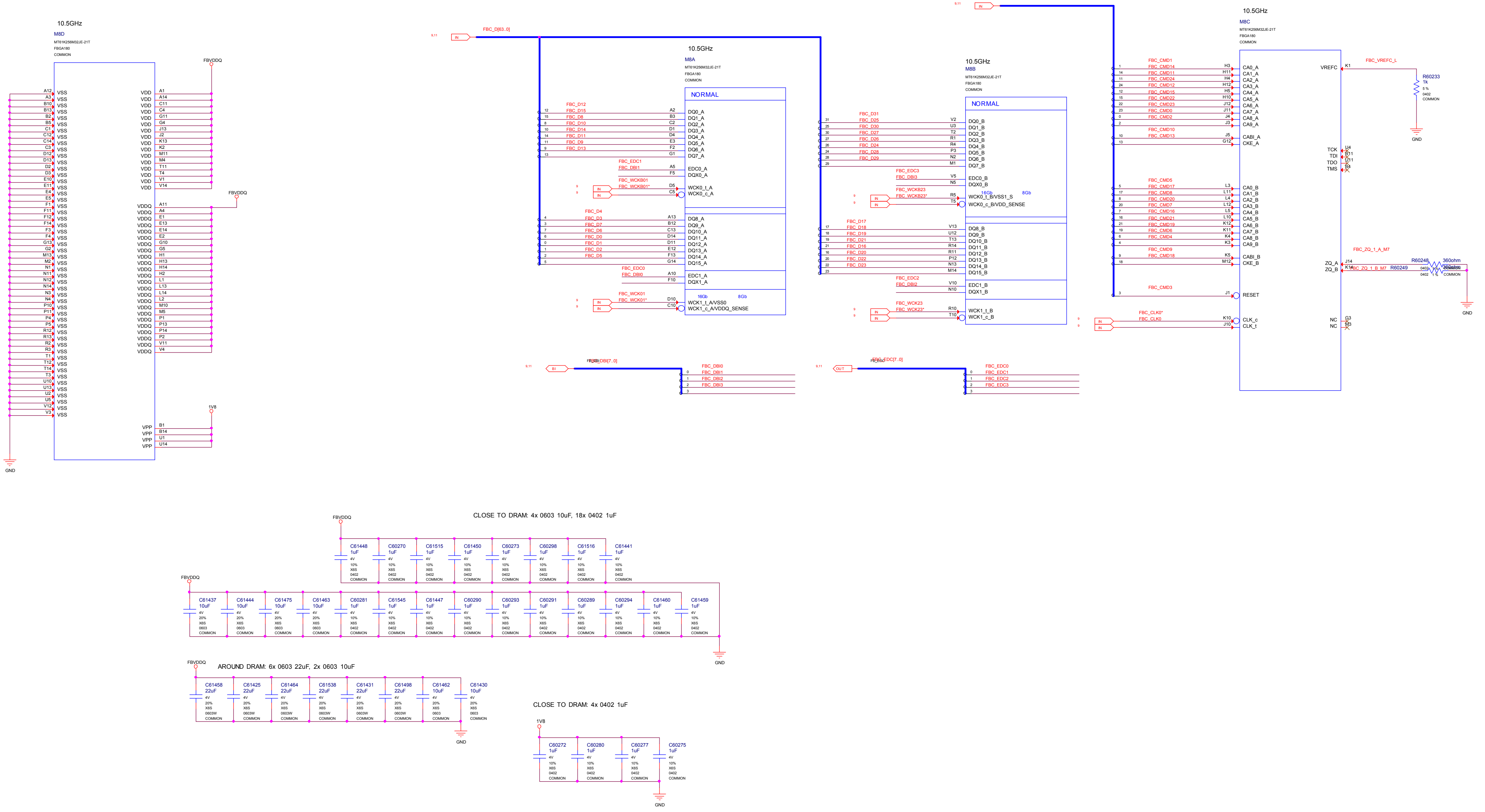
10.5GHz
M8D
MT61K256M32JE-21T
FBGA180
COMMON
FBVDDQ
A12 A3 B10 B13 B2 B5 C1 C12 C14 C3 D12 D13 D2 D3 E10 E11 E4 E5 F1 F11 F12 F14 F3 F4 G13 G2 M13 M2 N1 N11 N12 N14 N3 N4 P10 P11 P4 P5 R12 R13 R2 R3 T1 T12 T14 T3 U10 U13 U2 U5 V12 V3
VSS
VDD
A1 A14 C11 C4 G11 G4 J13 J2 K13 K2 M11 M4 T11 T4 V1 V14
VDDQ
A11 A4 E1 E13 E14 E2 G10 G5 H1 H13 H14 H2 L1 L13 L14 L2 M10 M5 P1 P13 P14 P2 V11 V4
1V8
VPP
B1 B14 U1 U14
GND
9,11
IN
FBC_D[63..0]
10.5GHz
M8A
MT61K256M32JE-21T
FBGA180
COMMON
NORMAL
FBC_D12 FBC_D15 FBC_D8 FBC_D10 FBC_D14 FBC_D11 FBC_D9 FBC_D13
12 15 8 10 14 11 9 13
A2 B3 C2 D1 D4 E3 F2 G1
DQ0_A DQ1_A DQ2_A DQ3_A DQ4_A DQ5_A DQ6_A DQ7_A
FBC_EDC1
FBC_DBI1
A5 F5
EDC0_A
DQX0_A
FBC_WCKB01
FBC_WCKB01*
9
IN
D5 C5
WCK0_t_A
WCK0_c_A
FBC_D4 FBC_D3 FBC_D7 FBC_D6 FBC_D0 FBC_D1 FBC_D2 FBC_D5
4 3 7 6 0 1 2 5
A13 B12 C13 D14 D11 E12 F13 G14
DQ8_A DQ9_A DQ10_A DQ11_A DQ12_A DQ13_A DQ14_A DQ15_A
FBC_EDC0
FBC_DBI0
A10 F10
EDC1_A
DQX1_A
FBC_WCK01
FBC_WCK01*
D10 C10
16Gb
8Gb
WCK1_t_A/VSS0
WCK1_c_A/VDDQ_SENSE
9,11
BI
FBC_DBI[7..0]
FB_DBI
FBC_DBI0 FBC_DBI1 FBC_DBI2 FBC_DBI3
0 1 2 3
10.5GHz
M8B
MT61K256M32JE-21T
FBGA180
COMMON
NORMAL
FBC_D31 FBC_D25 FBC_D30 FBC_D27 FBC_D26 FBC_D24 FBC_D28 FBC_D29
31 25 30 27 26 24 28 29
V2 U3 T2 R1 R4 P3 N2 M1
DQ0_B DQ1_B DQ2_B DQ3_B DQ4_B DQ5_B DQ6_B DQ7_B
FBC_EDC3
FBC_DBI3
V5 N5
EDC0_B
DQX0_B
FBC_WCKB23
FBC_WCKB23*
R5 T5
16Gb
8Gb
WCK0_t_B/VSS1_S
WCK0_c_B/VDD_SENSE
FBC_D17 FBC_D18 FBC_D19 FBC_D21 FBC_D16 FBC_D20 FBC_D22 FBC_D23
17 18 19 21 16 20 22 23
V13 U12 T13 R14 R11 P12 N13 M14
DQ8_B DQ9_B DQ10_B DQ11_B DQ12_B DQ13_B DQ14_B DQ15_B
FBC_EDC2
FBC_DBI2
V10 N10
EDC1_B
DQX1_B
FBC_WCK23
FBC_WCK23*
R10 T10
WCK1_t_B
WCK1_c_B
9,11
OUT
FBC_EDC[7..0]
FB_EDC
FBC_EDC0 FBC_EDC1 FBC_EDC2 FBC_EDC3
0 1 2 3
9,11
IN
FBC_CMD[53..0]
10.5GHz
M8C
MT61K256M32JE-21T
FBGA180
COMMON
FBC_CMD1 FBC_CMD14 FBC_CMD11 FBC_CMD24 FBC_CMD12 FBC_CMD15 FBC_CMD22 FBC_CMD23 FBC_CMD0 FBC_CMD2
1 14 11 24 12 15 22 23 0 2
H3 H11 H4 H12 H5 H10 J12 J11 J4 J3
CA0_A CA1_A CA2_A CA3_A CA4_A CA5_A CA6_A CA7_A CA8_A CA9_A
FBC_CMD10 FBC_CMD13
10 13
J5 G12
CABI_A
CKE_A
FBC_CMD5 FBC_CMD17 FBC_CMD8 FBC_CMD20 FBC_CMD7 FBC_CMD16 FBC_CMD21 FBC_CMD19 FBC_CMD6 FBC_CMD4
5 17 8 20 7 16 21 19 6 4
L3 L11 L4 L12 L5 L10 K12 K11 K4 K3
CA0_B CA1_B CA2_B CA3_B CA4_B CA5_B CA6_B CA7_B CA8_B CA9_B
FBC_CMD9 FBC_CMD18
9 18
K5 M12
CABI_B
CKE_B
FBC_CMD3
3
J1
RESET
FBC_CLK0*
FBC_CLK0
K10 J10
CLK_c
CLK_t
VREFC
K1
FBC_VREFC_L
R60233
1k
5 %
0402
COMMON
GND
TCK TDI TDO TMS
U4 B11 U11 B4
FBC_ZQ_1_A_M7
FBC_ZQ_1_B_M7
ZQ_A
ZQ_B
J14 K14
R60248
R60249
360ohm
360ohm
0402
1 %
COMMON
GND
NC NC
G3 M3
FBVDDQ
CLOSE TO DRAM: 4x 0603 10uF, 18x 0402 1uF
C61448 1uF
C60270 1uF
C61515 1uF
C61450 1uF
C60273 1uF
C60298 1uF
C61516 1uF
C61441 1uF
4V
10%
X6S
0402
COMMON
C61437 10uF
C61444 10uF
C61475 10uF
C61463 10uF
4V
20%
X6S
0603
COMMON
C60281 1uF
C61545 1uF
C61447 1uF
C60290 1uF
C60293 1uF
C60291 1uF
C60289 1uF
C60294 1uF
C61460 1uF
C61459 1uF
GND
FBVDDQ
AROUND DRAM: 6x 0603 22uF, 2x 0603 10uF
C61458 22uF
C61425 22uF
C61464 22uF
C61538 22uF
C61431 22uF
C61498 22uF
0603W
C61462 10uF
C61430 10uF
0603
GND
CLOSE TO DRAM: 4x 0402 1uF
1V8
C60272 1uF
C60280 1uF
C60277 1uF
C60275 1uF
GND

MICRO-STAR INT'L CO.,LTD

MS-V389

Size
Custom

Document Description
MEMORY: FBC Partition 31..0

Rev
1.1

Date: Thursday, July 23, 2020
Sheet 10 of 76

MEMORY: FBC Partition 63..32

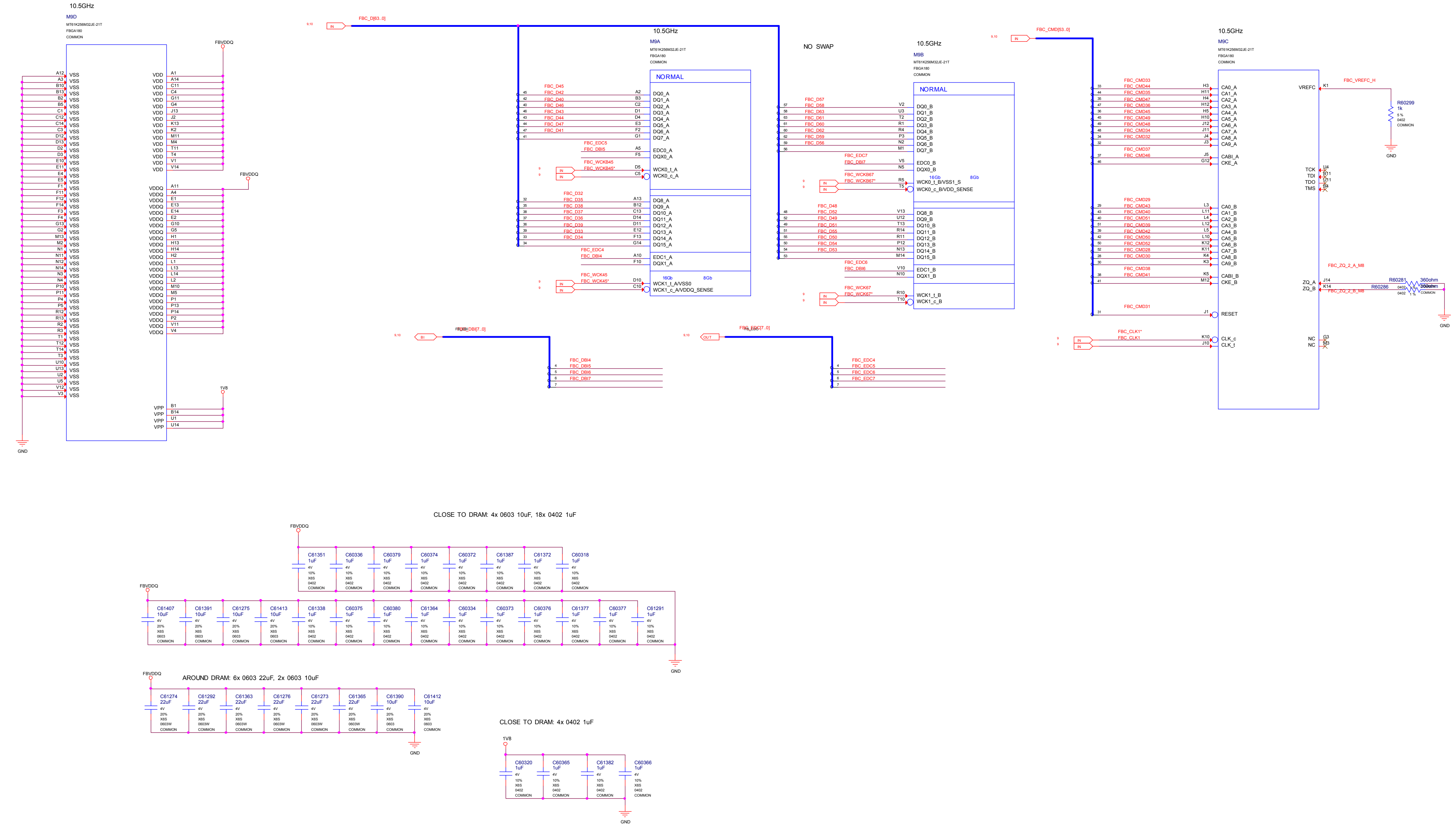
10.5GHz
M9D
MT61K256M32JE-21T
FBGA180
COMMON
FBVDDQ
VSS
VDD
VDDQ
VPP
1V8
GND
FBC_D[63..0]
IN
10.5GHz
M9A
MT61K256M32JE-21T
FBGA180
COMMON
NORMAL
DQ0_A
DQ1_A
DQ2_A
DQ3_A
DQ4_A
DQ5_A
DQ6_A
DQ7_A
EDC0_A
DQX0_A
WCK0_t_A
WCK0_c_A
DQ8_A
DQ9_A
DQ10_A
DQ11_A
DQ12_A
DQ13_A
DQ14_A
DQ15_A
EDC1_A
DQX1_A
16Gb
8Gb
WCK1_t_A/VSS0
WCK1_c_A/VDDQ_SENSE
NO SWAP
10.5GHz
M9B
MT61K256M32JE-21T
FBGA180
COMMON
NORMAL
DQ0_B
DQ1_B
DQ2_B
DQ3_B
DQ4_B
DQ5_B
DQ6_B
DQ7_B
EDC0_B
DQX0_B
WCK0_t_B/VSS1_S
WCK0_c_B/VDD_SENSE
DQ8_B
DQ9_B
DQ10_B
DQ11_B
DQ12_B
DQ13_B
DQ14_B
DQ15_B
EDC1_B
DQX1_B
WCK1_t_B
WCK1_c_B
FBC_CMD[53..0]
10.5GHz
M9C
MT61K256M32JE-21T
FBGA180
COMMON
CA0_A
CA1_A
CA2_A
CA3_A
CA4_A
CA5_A
CA6_A
CA7_A
CA8_A
CA9_A
CABI_A
CKE_A
CA0_B
CA1_B
CA2_B
CA3_B
CA4_B
CA5_B
CA6_B
CA7_B
CA8_B
CA9_B
CABI_B
CKE_B
RESET
CLK_c
CLK_t
VREFC
FBC_VREFC_H
R60299
1k
TCK
TDI
TDO
TMS
ZQ_A
ZQ_B
FBC_ZQ_2_A_M8
FBC_ZQ_2_B_M8
R60281
R60286
360ohm
NC
FBC_CLK1*
FBC_CLK1
FBC_DBI[7..0]
BI
FBC_EDC[7..0]
OUT
FBC_DBI4
FBC_DBI5
FBC_DBI6
FBC_DBI7
FBC_EDC4
FBC_EDC5
FBC_EDC6
FBC_EDC7
CLOSE TO DRAM: 4x 0603 10uF, 18x 0402 1uF
C61351
C60336
C60379
C60374
C60372
C61387
C61372
C60318
C61407
C61391
C61275
C61413
C61338
C60375
C60380
C61364
C60334
C60373
C60376
C61377
C60377
C61291
AROUND DRAM: 6x 0603 22uF, 2x 0603 10uF
C61274
C61292
C61363
C61276
C61273
C61365
C61390
C61412
CLOSE TO DRAM: 4x 0402 1uF
C60320
C60365
C61382
C60366

MICRO-STAR INT'L CO.,LTD

MS-V389

Size	Document Description	Rev
Custom	MEMORY: FBC Partition 63..32	1.1

Date: Thursday, July 23, 2020 Sheet 11 of 76

MEMORY: FBD Partition 31..0

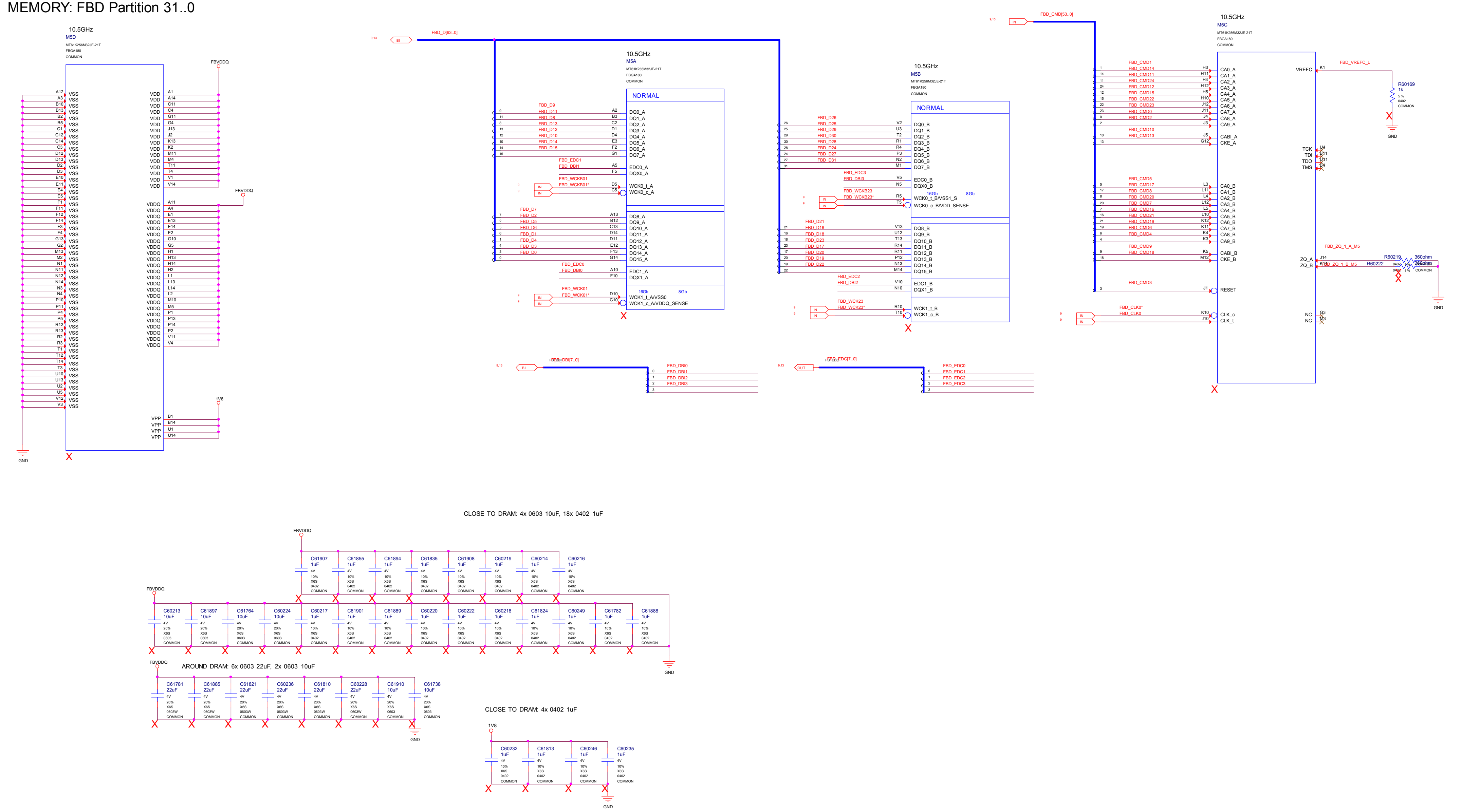
10.5GHz
M5D
MT61K256M32JE-21T
FBGA180
COMMON
FBVDDQ
VSS
VDD
VDDQ
VPP
1V8
GND
FBD_D[63..0]
BI
10.5GHz
M5A
NORMAL
DQ0_A
DQ1_A
DQ2_A
DQ3_A
DQ4_A
DQ5_A
DQ6_A
DQ7_A
EDC0_A
DQX0_A
WCK0_t_A
WCK0_c_A
DQ8_A
DQ9_A
DQ10_A
DQ11_A
DQ12_A
DQ13_A
DQ14_A
DQ15_A
EDC1_A
DQX1_A
WCK1_t_A/VSS0
WCK1_c_A/VDDQ_SENSE
16Gb
8Gb
FBD_WCKB01
FBD_WCKB01*
FBD_WCK01
FBD_WCK01*
FBD_EDC0
FBD_EDC1
FBD_DBI0
FBD_DBI1
10.5GHz
M5B
NORMAL
DQ0_B
DQ1_B
DQ2_B
DQ3_B
DQ4_B
DQ5_B
DQ6_B
DQ7_B
EDC0_B
DQX0_B
WCK0_t_B/VSS1_S
WCK0_c_B/VDD_SENSE
DQ8_B
DQ9_B
DQ10_B
DQ11_B
DQ12_B
DQ13_B
DQ14_B
DQ15_B
EDC1_B
DQX1_B
WCK1_t_B
WCK1_c_B
FBD_WCKB23
FBD_WCKB23*
FBD_WCK23
FBD_WCK23*
FBD_EDC2
FBD_EDC3
FBD_DBI2
FBD_DBI3
FBD_CMD[63..0]
IN
10.5GHz
M5C
CA0_A
CA1_A
CA2_A
CA3_A
CA4_A
CA5_A
CA6_A
CA7_A
CA8_A
CA9_A
CABI_A
CKE_A
CA0_B
CA1_B
CA2_B
CA3_B
CA4_B
CA5_B
CA6_B
CA7_B
CA8_B
CA9_B
CABI_B
CKE_B
RESET
CLK_c
CLK_t
VREFC
TCK
TDI
TDO
TMS
ZQ_A
ZQ_B
NC
FBD_VREFC_L
R60169
1k
5 %
0402
COMMON
FBD_ZQ_1_A_M5
FBD_ZQ_1_B_M5
R60219
R60222
360ohm
FBD_CLK0*
FBD_CLK0
FBD_CMD3
FBD_DBI[7..0]
FBD_EDC[7..0]
OUT
GND

CLOSE TO DRAM: 4x 0603 10uF, 18x 0402 1uF

AROUND DRAM: 6x 0603 22uF, 2x 0603 10uF

CLOSE TO DRAM: 4x 0402 1uF

MICRO-STAR INT'L CO.,LTD

MS-V390

Size	Document Description	Rev
Custom	MEMORY: FBD Partition 31..0	1.1

Date: Thursday, July 23, 2020 Sheet 12 of 76

MEMORY: FBD Partition 63..32

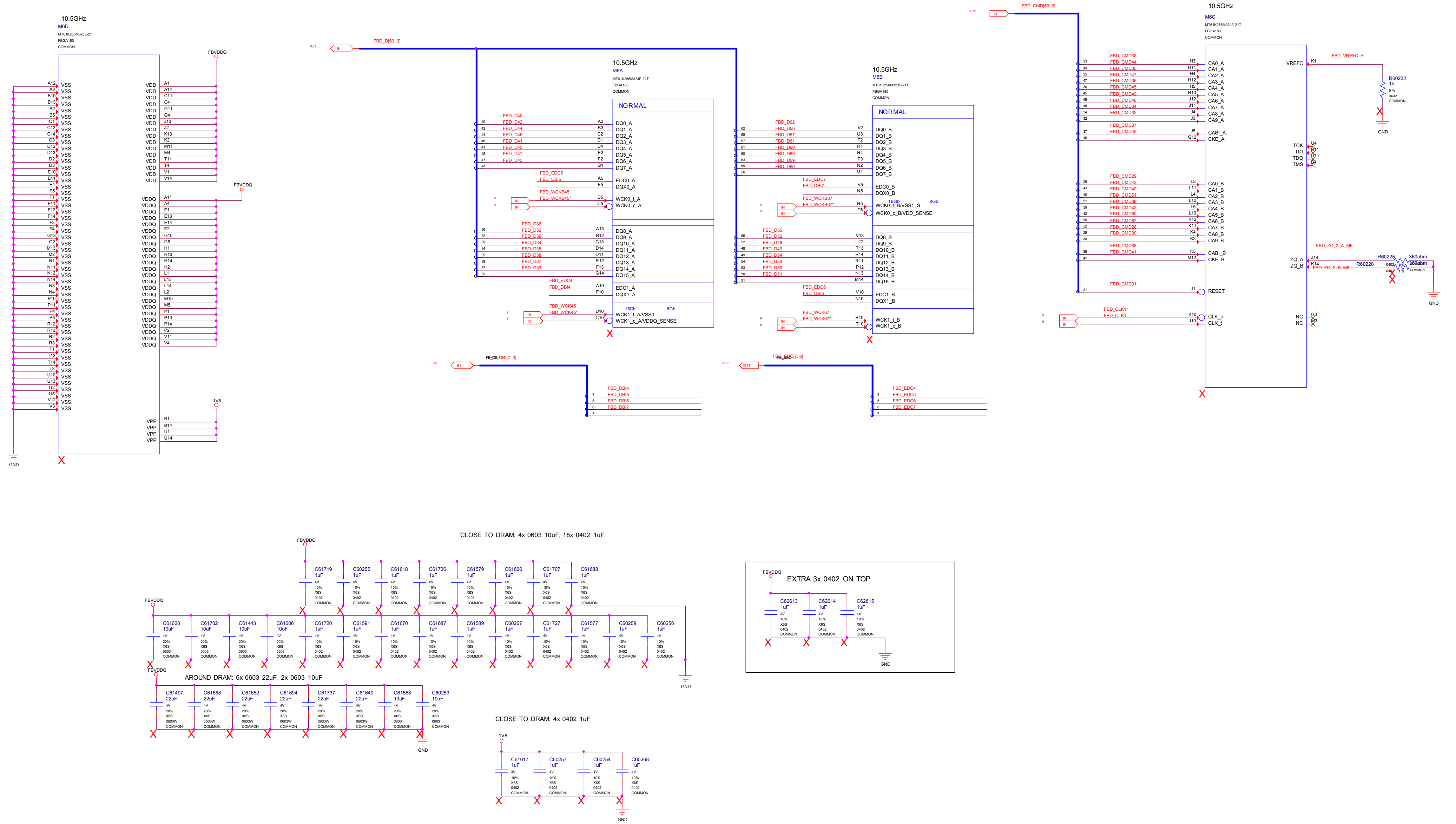

10.5GHz
M6D
MT61K256M32JE-21T
FBGA180
COMMON
VSS
VDD
VDDQ
VPP
FBVDDQ
1V8
GND
10.5GHz
M6A
MT61K256M32JE-21T
FBGA180
COMMON
NORMAL
FBD_D[63..0]
BI
DQ0_A
DQ1_A
DQ2_A
DQ3_A
DQ4_A
DQ5_A
DQ6_A
DQ7_A
EDC0_A
DQX0_A
WCK0_t_A
WCK0_c_A
DQ8_A
DQ9_A
DQ10_A
DQ11_A
DQ12_A
DQ13_A
DQ14_A
DQ15_A
EDC1_A
DQX1_A
WCK1_t_A/VSS0
WCK1_c_A/VDDQ_SENSE
16Gb
8Gb
FBD_WCK45
FBD_WCK45*
IN
10.5GHz
M6B
MT61K256M32JE-21T
FBGA180
COMMON
NORMAL
DQ0_B
DQ1_B
DQ2_B
DQ3_B
DQ4_B
DQ5_B
DQ6_B
DQ7_B
EDC0_B
DQX0_B
WCK0_t_B/VSS1_S
WCK0_c_B/VDD_SENSE
DQ8_B
DQ9_B
DQ10_B
DQ11_B
DQ12_B
DQ13_B
DQ14_B
DQ15_B
EDC1_B
DQX1_B
WCK1_t_B
WCK1_c_B
FBD_WCK67
FBD_WCK67*
FBD_DBI[7..0]
FBD_EDC[7..0]
OUT
FBD_CMD[53..0]
10.5GHz
M6C
MT61K256M32JE-21T
FBGA180
COMMON
CA0_A
CA1_A
CA2_A
CA3_A
CA4_A
CA5_A
CA6_A
CA7_A
CA8_A
CA9_A
CABI_A
CKE_A
CA0_B
CA1_B
CA2_B
CA3_B
CA4_B
CA5_B
CA6_B
CA7_B
CA8_B
CA9_B
CABI_B
CKE_B
RESET
CLK_c
CLK_t
VREFC
TCK
TDI
TDO
TMS
ZQ_A
ZQ_B
NC
FBD_VREFC_H
R60232
1k
5 %
0402
COMMON
FBD_ZQ_2_A_M6
FBD_ZQ_2_B_M6
R60225
R60228
360ohm
FBD_CLK1*
FBD_CLK1
FBD_CMD31
CLOSE TO DRAM: 4x 0603 10uF, 18x 0402 1uF
AROUND DRAM: 6x 0603 22uF, 2x 0603 10uF
EXTRA 3x 0402 ON TOP
CLOSE TO DRAM: 4x 0402 1uF
1uF
10uF
22uF
4V
10%
20%
X6S
0402
0603
0603W
COMMON

MICRO-STAR INT'L CO.,LTD

MS-V389

Size	Document Description	Rev
Custom	MEMORY: FBD Partition 63..32	1.1

Date: Thursday, July 23, 2020 Sheet 13 of 76

MEMORY: GPU Partition E/F

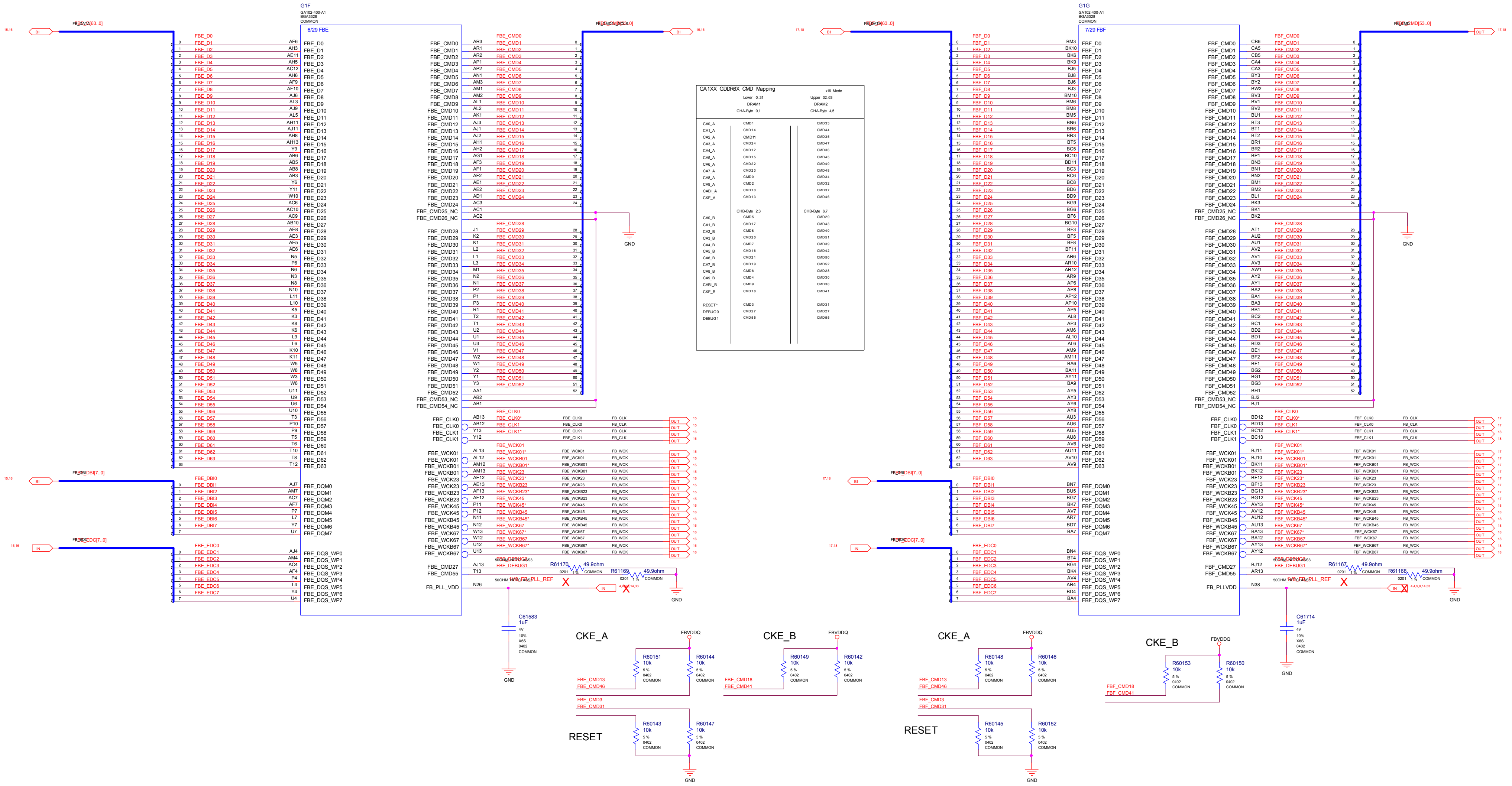
G1F
GA102-400-A1
BGA3328
COMMON
6/29 FBE
FBE_DATA[63..0]
FBE_CMD[53..0]
FBE_DBI[7..0]
FBE_EDC[7..0]
FBE_D0 … FBE_D63
FBE_CMD0 … FBE_CMD52
FBE_CMD25_NC
FBE_CMD26_NC
FBE_CMD53_NC
FBE_CMD54_NC
FBE_CLK0
FBE_CLK0*
FBE_CLK1
FBE_CLK1*
FBE_WCK01
FBE_WCKB01
FBE_WCK23
FBE_WCKB23
FBE_WCK45
FBE_WCKB45
FBE_WCK67
FBE_WCKB67
FBE_DQM0 … FBE_DQM7
FBE_DQS_WP0 … FBE_DQS_WP7
FBE_CMD27
FBE_CMD55
FBE_DEBUG0
FBE_DEBUG1
FB_PLL_VDD
FB_PLL_REF
R61170
R61169
49.9ohm
C61583
1uF
4V
10%
X6S
0402
COMMON
GND
G1G
GA102-400-A1
BGA3328
COMMON
7/29 FBF
FBF_DATA[63..0]
FBF_CMD[53..0]
FBF_DBI[7..0]
FBF_EDC[7..0]
FBF_D0 … FBF_D63
FBF_CMD0 … FBF_CMD52
FBF_CLK0
FBF_CLK1
FBF_WCK01
FBF_WCKB01
FBF_DQM0 … FBF_DQM7
FBF_DQS_WP0 … FBF_DQS_WP7
FBF_PLLVDD
R61167
R61168
C61714
GA1XX GDDR6X CMD Mapping
x16 Mode
Lower 0..31
Upper 32..63
DRAM1
DRAM2
CHA-Byte 0,1
CHA-Byte 4,5
CHB-Byte 2,3
CHB-Byte 6,7
RESET*
DEBUG0
DEBUG1
CKE_A
CKE_B
RESET
FBVDDQ
R60151
R60144
R60149
R60142
R60143
R60147
R60148
R60146
R60153
R60150
R60145
R60152
10k
5 %
0402
COMMON
FBE_CMD13
FBE_CMD46
FBE_CMD18
FBE_CMD41
FBE_CMD3
FBE_CMD31
FBF_CMD13
FBF_CMD46
FBF_CMD18
FBF_CMD41
FBF_CMD3
FBF_CMD31
BI
IN
OUT

MICRO-STAR INT'L CO.,LTD

MS-V389

Size	Document Description	Rev
Custom	MEMORY: GPU Partition E/F	1.1

Date: Thursday, July 23, 2020 | Sheet 14 of 76

MEMORY: FBE Partition 31..0

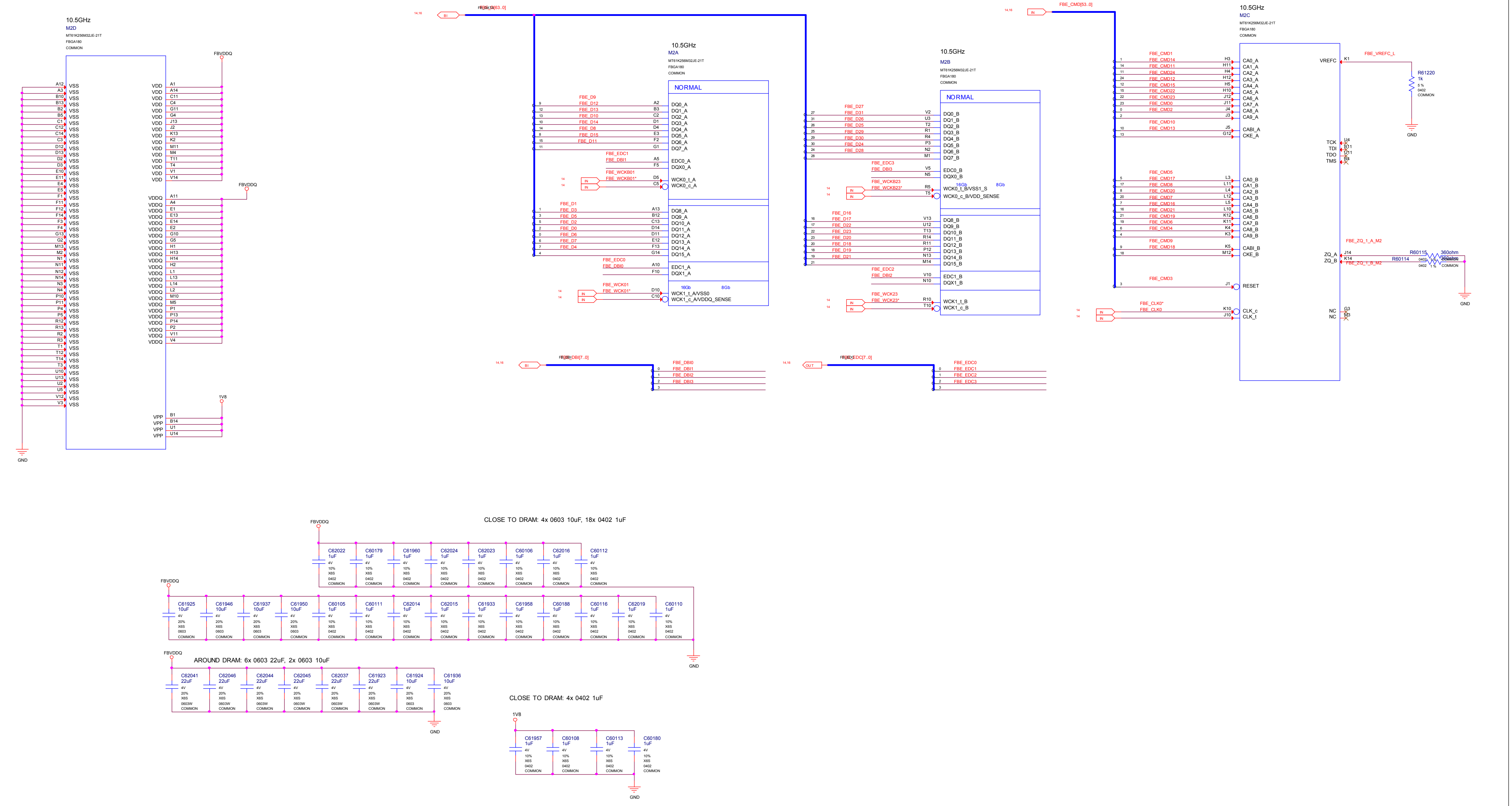
10.5GHz
M2D
MT61K256M32JE-21T
FBGA180
COMMON
FBVDDQ
VSS
VDD
VDDQ
VPP
1V8
GND
10.5GHz
M2A
NORMAL
FBE_D[63..0]
DQ0_A
DQ1_A
DQ2_A
DQ3_A
DQ4_A
DQ5_A
DQ6_A
DQ7_A
EDC0_A
DQX0_A
WCK0_t_A
WCK0_c_A
DQ8_A
DQ9_A
DQ10_A
DQ11_A
DQ12_A
DQ13_A
DQ14_A
DQ15_A
EDC1_A
DQX1_A
WCK1_t_A/VSS0
WCK1_c_A/VDDQ_SENSE
16Gb
8Gb
10.5GHz
M2B
DQ0_B
DQ1_B
DQ2_B
DQ3_B
DQ4_B
DQ5_B
DQ6_B
DQ7_B
EDC0_B
DQX0_B
WCK0_t_B/VSS1_S
WCK0_c_B/VDD_SENSE
DQ8_B
DQ9_B
DQ10_B
DQ11_B
DQ12_B
DQ13_B
DQ14_B
DQ15_B
EDC1_B
DQX1_B
WCK1_t_B
WCK1_c_B
FBE_CMD[53..0]
10.5GHz
M2C
CA0_A
CA1_A
CA2_A
CA3_A
CA4_A
CA5_A
CA6_A
CA7_A
CA8_A
CA9_A
CABI_A
CKE_A
CA0_B
CA1_B
CA2_B
CA3_B
CA4_B
CA5_B
CA6_B
CA7_B
CA8_B
CA9_B
CABI_B
CKE_B
RESET
CLK_c
CLK_t
VREFC
FBE_VREFC_L
R61220
1k
TCK
TDI
TDO
TMS
ZQ_A
ZQ_B
FBE_ZQ_1_A_M2
FBE_ZQ_1_B_M2
R60115
R60114
360ohm
NC
FBE_DBI[7..0]
FBE_EDC[7..0]
FBE_CLK0*
FBE_CLK0
IN
OUT
BI
C62022
C60179
C61960
C62024
C62023
C60106
C62016
C60112
C61925
C61946
C61937
C61950
C60105
C60111
C62014
C62015
C61933
C61958
C60188
C60116
C62019
C60110
C62041
C62046
C62044
C62045
C62037
C61923
C61924
C61936
C61957
C60108
C60113
C60180

CLOSE TO DRAM: 4x 0603 10uF, 18x 0402 1uF

AROUND DRAM: 6x 0603 22uF, 2x 0603 10uF

CLOSE TO DRAM: 4x 0402 1uF

MICRO-STAR INT'L CO.,LTD

MS-V389

Size	Document Description	Rev
Custom	MEMORY: FBE Partition 31..0	1.1

Date: Thursday, July 23, 2020 Sheet 15 of 76

MEMORY: FBE Partition 63..32

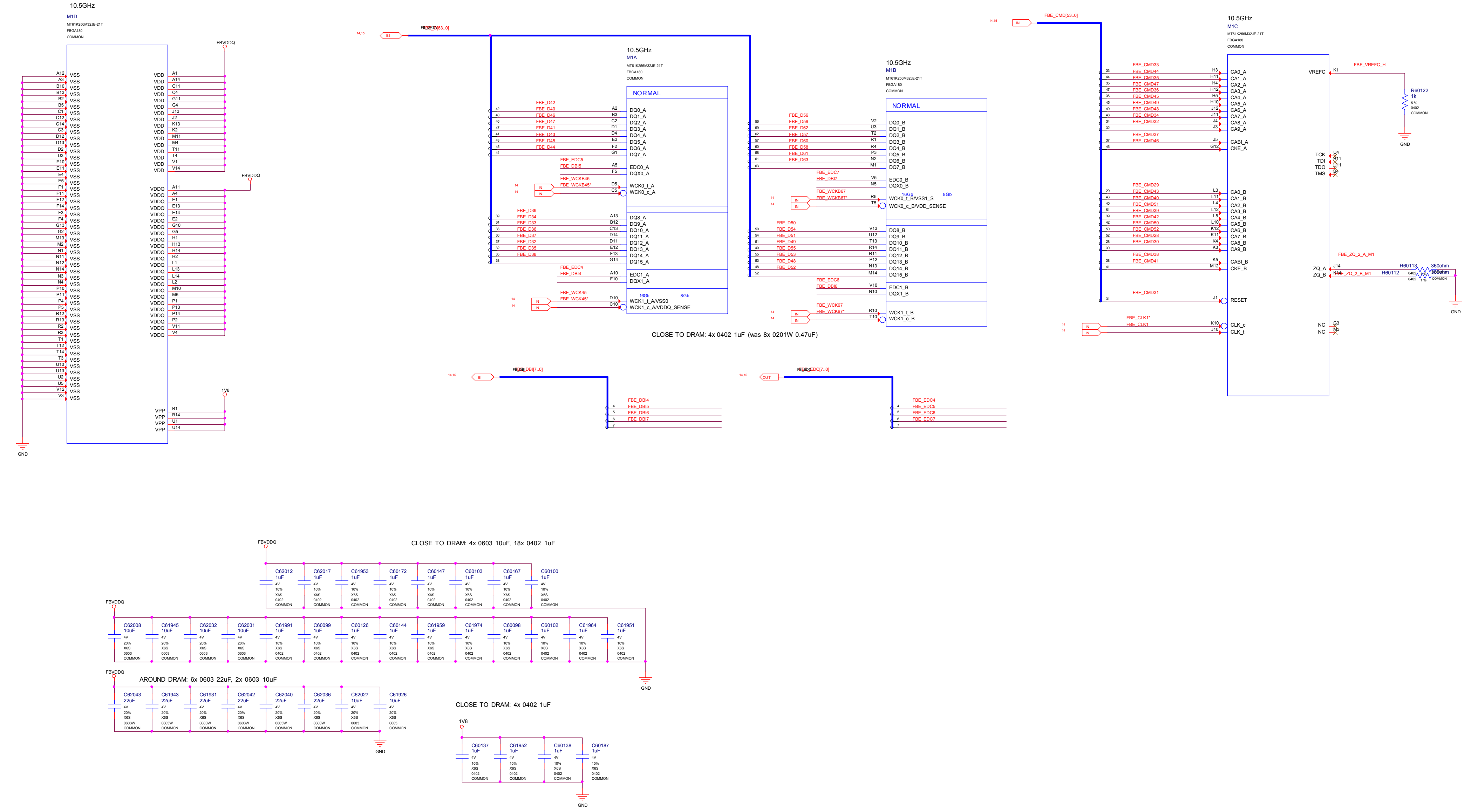
10.5GHz
M1D
MT61K256M32JE-21T
FBGA180
COMMON
FBVDDQ
VSS
VDD
VDDQ
VPP
1V8
GND
10.5GHz
M1A
MT61K256M32JE-21T
FBGA180
COMMON
NORMAL
FBE_D[63..0]
BI
FBE_D42
FBE_D40
FBE_D46
FBE_D47
FBE_D41
FBE_D43
FBE_D45
FBE_D44
FBE_EDC5
FBE_DBI5
FBE_WCKB45
FBE_WCKB45*
DQ0_A
DQ1_A
DQ2_A
DQ3_A
DQ4_A
DQ5_A
DQ6_A
DQ7_A
EDC0_A
DQX0_A
WCK0_t_A
WCK0_c_A
FBE_D39
FBE_D34
FBE_D33
FBE_D36
FBE_D37
FBE_D32
FBE_D35
FBE_D38
DQ8_A
DQ9_A
DQ10_A
DQ11_A
DQ12_A
DQ13_A
DQ14_A
DQ15_A
FBE_EDC4
FBE_DBI4
EDC1_A
DQX1_A
FBE_WCK45
FBE_WCK45*
16Gb
8Gb
WCK1_t_A/VSS0
WCK1_c_A/VDDQ_SENSE
CLOSE TO DRAM: 4x 0402 1uF (was 8x 0201W 0.47uF)
10.5GHz
M1B
MT61K256M32JE-21T
FBGA180
COMMON
NORMAL
FBE_D56
FBE_D59
FBE_D62
FBE_D57
FBE_D60
FBE_D58
FBE_D61
FBE_D63
DQ0_B
DQ1_B
DQ2_B
DQ3_B
DQ4_B
DQ5_B
DQ6_B
DQ7_B
FBE_EDC7
FBE_DBI7
EDC0_B
DQX0_B
FBE_WCKB67
FBE_WCKB67*
WCK0_t_B/VSS1_S
WCK0_c_B/VDD_SENSE
FBE_D50
FBE_D54
FBE_D51
FBE_D49
FBE_D55
FBE_D53
FBE_D48
FBE_D52
DQ8_B
DQ9_B
DQ10_B
DQ11_B
DQ12_B
DQ13_B
DQ14_B
DQ15_B
FBE_EDC6
FBE_DBI6
EDC1_B
DQX1_B
FBE_WCK67
FBE_WCK67*
WCK1_t_B
WCK1_c_B
FBE_CMD[53..0]
IN
10.5GHz
M1C
MT61K256M32JE-21T
FBGA180
COMMON
FBE_CMD33
FBE_CMD44
FBE_CMD35
FBE_CMD47
FBE_CMD36
FBE_CMD45
FBE_CMD49
FBE_CMD48
FBE_CMD34
FBE_CMD32
CA0_A
CA1_A
CA2_A
CA3_A
CA4_A
CA5_A
CA6_A
CA7_A
CA8_A
CA9_A
FBE_CMD37
FBE_CMD46
CABI_A
CKE_A
VREFC
FBE_VREFC_H
R60122
1k
1%
0402
COMMON
GND
TCK
TDI
TDO
TMS
FBE_CMD29
FBE_CMD43
FBE_CMD40
FBE_CMD51
FBE_CMD39
FBE_CMD42
FBE_CMD50
FBE_CMD52
FBE_CMD28
FBE_CMD30
CA0_B
CA1_B
CA2_B
CA3_B
CA4_B
CA5_B
CA6_B
CA7_B
CA8_B
CA9_B
FBE_CMD38
FBE_CMD41
CABI_B
CKE_B
FBE_ZQ_2_A_M1
FBE_ZQ_2_B_M1
ZQ_A
ZQ_B
R60113
R60112
360ohm
FBE_CMD31
RESET
FBE_CLK1*
FBE_CLK1
CLK_c
CLK_t
NC
FBE_DBI[7..0]
FBE_DBI4
FBE_DBI5
FBE_DBI6
FBE_DBI7
FBE_EDC[7..0]
OUT
FBE_EDC4
FBE_EDC5
FBE_EDC6
FBE_EDC7
CLOSE TO DRAM: 4x 0603 10uF, 18x 0402 1uF
C62012 1uF
C62017 1uF
C61953 1uF
C60172 1uF
C60147 1uF
C60103 1uF
C60167 1uF
C60100 1uF
C62008 10uF
C61945 10uF
C62032 10uF
C62031 10uF
C61991 1uF
C60099 1uF
C60126 1uF
C60144 1uF
C61959 1uF
C61974 1uF
C60098 1uF
C60102 1uF
C61964 1uF
C61951 1uF
AROUND DRAM: 6x 0603 22uF, 2x 0603 10uF
C62043 22uF
C61943 22uF
C61931 22uF
C62042 22uF
C62040 22uF
C62036 22uF
C62027 10uF
C61926 10uF
CLOSE TO DRAM: 4x 0402 1uF
C60137 1uF
C61952 1uF
C60138 1uF
C60187 1uF
4V
10%
20%
X6S
0402
0603
0603W
COMMON

MICRO-STAR INT'L CO.,LTD

MS-V389

Size	Document Description	Rev
Custom	MEMORY: FBE Partition 63..32	1.1

Date: Thursday, July 23, 2020 Sheet 16 of 76

MEMORY: FBF Partition 31..0

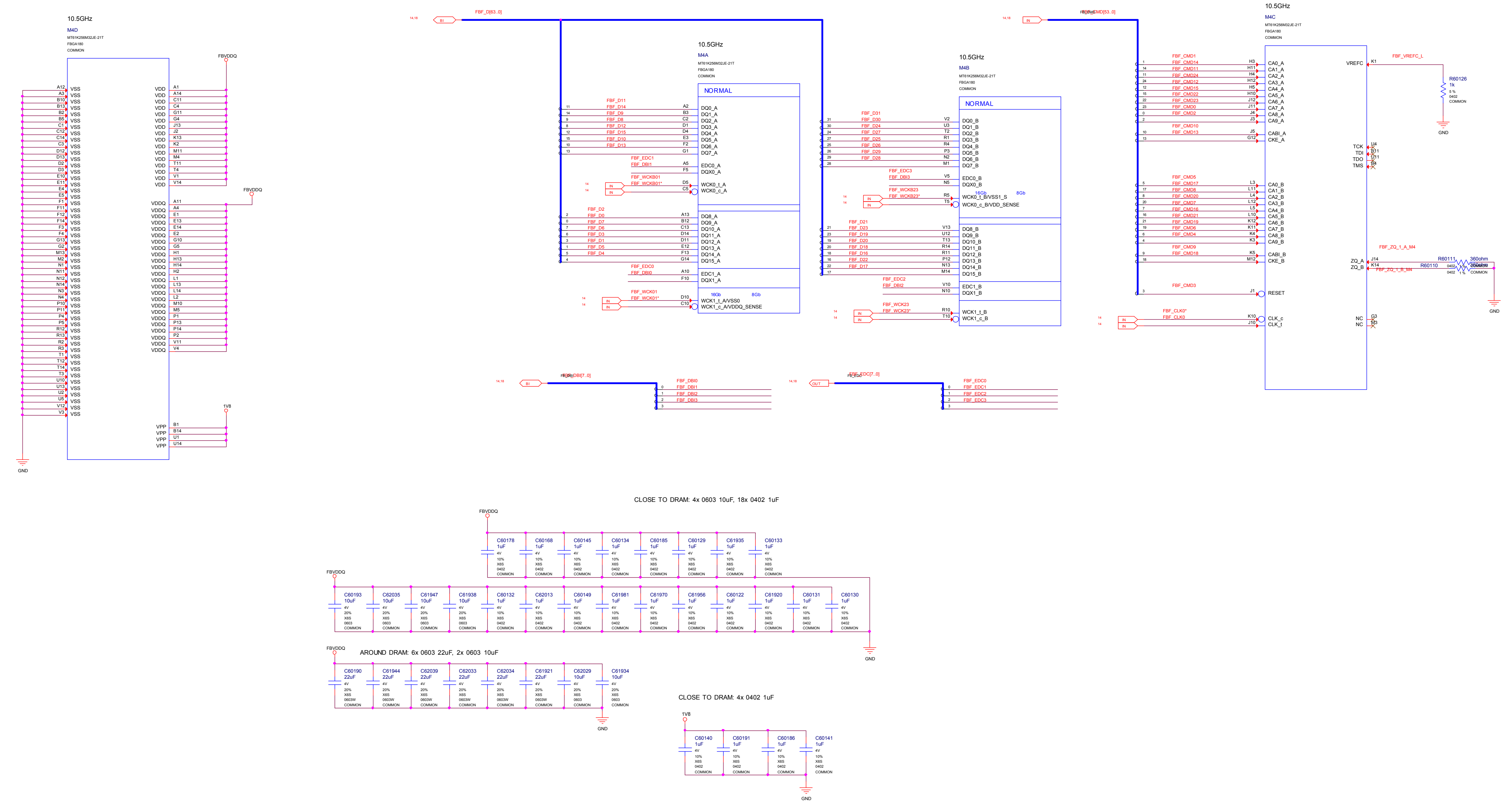
10.5GHz
M4D
MT61K256M32JE-21T
FBGA180
COMMON
M4A
NORMAL
M4B
M4C
FBF_D[63..0]
FBF_CMD[53..0]
FBF_DBI[7..0]
FBF_EDC[7..0]
FBVDDQ
1V8
GND
VSS
VDD
VDDQ
VPP
DQ0_A
DQ7_A
EDC0_A
DQX0_A
WCK0_t_A
WCK0_c_A
DQ8_A
DQ15_A
EDC1_A
DQX1_A
WCK1_t_A/VSS0
WCK1_c_A/VDDQ_SENSE
DQ0_B
DQ7_B
EDC0_B
DQX0_B
WCK0_t_B/VSS1_S
WCK0_c_B/VDD_SENSE
DQ8_B
DQ15_B
EDC1_B
DQX1_B
WCK1_t_B
WCK1_c_B
16Gb
8Gb
CA0_A
CA9_A
CABI_A
CKE_A
CA0_B
CA9_B
CABI_B
CKE_B
RESET
CLK_c
CLK_t
VREFC
TCK
TDI
TDO
TMS
ZQ_A
ZQ_B
NC
FBF_VREFC_L
R60126
1k
5 %
0402
FBF_ZQ_1_A_M4
FBF_ZQ_1_B_M4
R60111
R60110
360ohm
FBF_CLK0*
FBF_CLK0
BI
IN
OUT
C60178
C60168
C60145
C60134
C60185
C60129
C61935
C60133
C60193
C62035
C61947
C61938
C60132
C62013
C60149
C61981
C61970
C61956
C60122
C61920
C60131
C60130
C60190
C61944
C62039
C62033
C62034
C61921
C62029
C61934
C60140
C60191
C60186
C60141
1uF
10uF
22uF
4V
10%
20%
X6S
0402
0603
0603W

CLOSE TO DRAM: 4x 0603 10uF, 18x 0402 1uF

AROUND DRAM: 6x 0603 22uF, 2x 0603 10uF

CLOSE TO DRAM: 4x 0402 1uF

MICRO-STAR INT'L CO.,LTD

MS-V389

Size	Document Description	Rev
Custom	MEMORY: FBF Partition 31..0	1.1

Date: Thursday, July 23, 2020 Sheet 17 of 76

MEMORY: FBF Partition 63..32

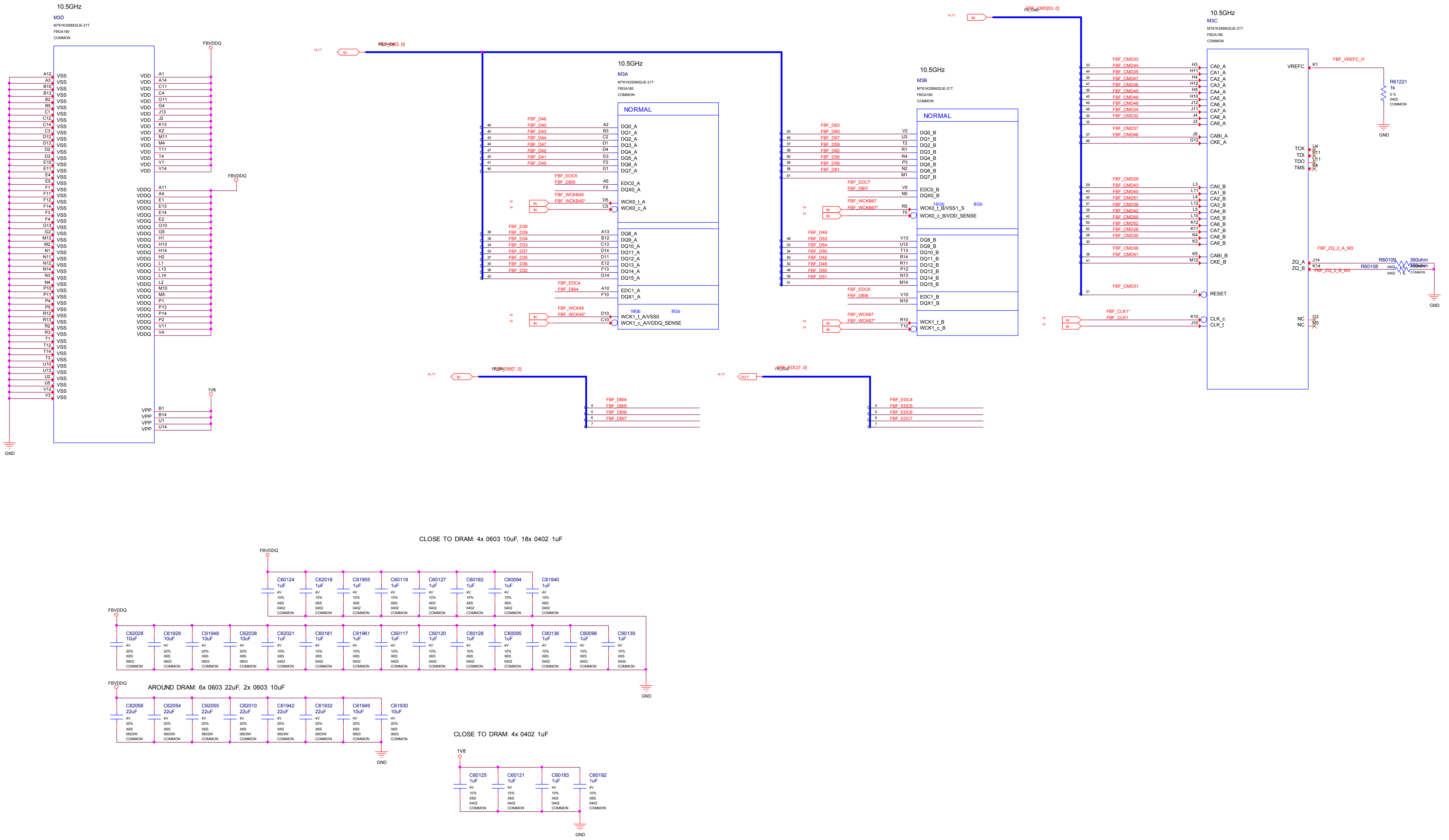
10.5GHz
M3D
MT61K256M32JE-21T
FBGA180
COMMON
FBVDDQ
1V8
GND
10.5GHz
M3A
MT61K256M32JE-21T
FBGA180
COMMON
NORMAL
FBF_D[63..0]
BI
10.5GHz
M3B
MT61K256M32JE-21T
FBGA180
COMMON
NORMAL
10.5GHz
M3C
MT61K256M32JE-21T
FBGA180
COMMON
FBF_CMD[53..0]
IN
FBF_VREFC_H
R61221
1k
5 %
0402
COMMON
FBF_ZQ_2_A_M3
FBF_ZQ_2_B_M3
R60109
R60108
360ohm
FBF_CLK1*
FBF_CLK1
FBF_DBI[7..0]
FBF_EDC[7..0]
OUT
16Gb
8Gb
VREFC
RESET
CLK_c
CLK_t
TCK
TDI
TDO
TMS
ZQ_A
ZQ_B
NC
C60124
C62018
C61955
C60119
C60127
C60182
C60094
C61940
C62028
C61929
C61948
C62038
C62021
C60181
C61961
C60117
C60120
C60128
C60095
C60136
C60096
C60139
C62056
C62054
C62055
C62010
C61942
C61932
C61949
C61930
C60125
C60121
C60183
C60192

CLOSE TO DRAM: 4x 0603 10uF, 18x 0402 1uF

AROUND DRAM: 6x 0603 22uF, 2x 0603 10uF

CLOSE TO DRAM: 4x 0402 1uF

MICRO-STAR INT'L CO.,LTD	
MS-V389	
Size Custom	Document Description MEMORY: FBF Partition 63..32
Rev	1.1
Date: Thursday, July 23, 2020	Sheet 18 of 76

GPU GND, RFUs & RSVD

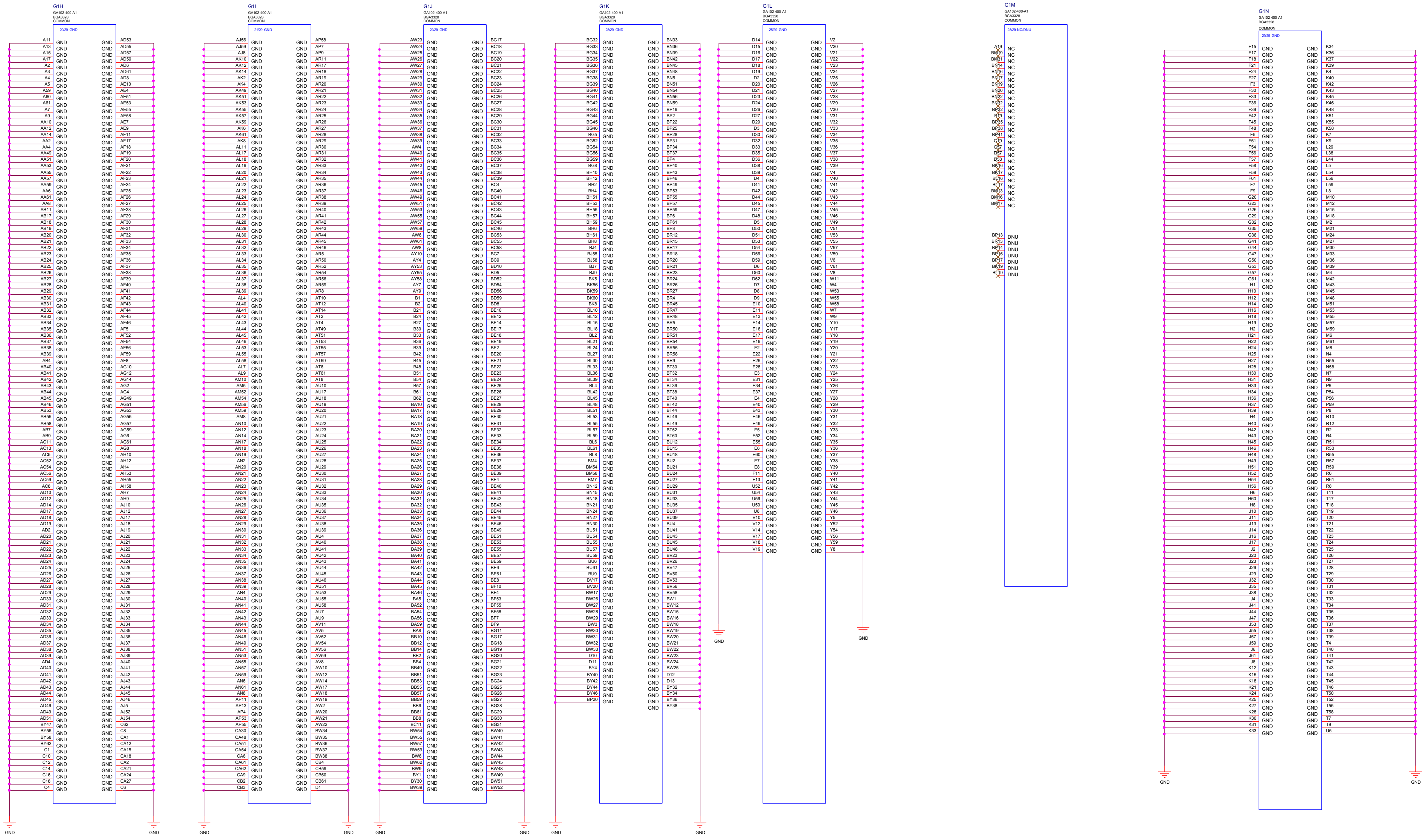
G1H
GA102-400-A1
BGA3328
COMMON
20/29 GND
G1I
GA102-400-A1
BGA3328
COMMON
21/29 GND
G1J
GA102-400-A1
BGA3328
COMMON
22/29 GND
G1K
GA102-400-A1
BGA3328
COMMON
23/29 GND
G1L
GA102-400-A1
BGA3328
COMMON
25/29 GND
G1M
GA102-400-A1
BGA3328
COMMON
28/29 NC/DNU
G1N
GA102-400-A1
BGA3328
COMMON
29/29 GND
GND
NC
DNU

MICRO-STAR INT'L CO.,LTD

MS-V389

Size	Document Description	Rev
Custom	GPU GND, RFUs & RSVD	1.1

Date: Thursday, July 23, 2020   Sheet 19 of 76

GPU PWR and GND

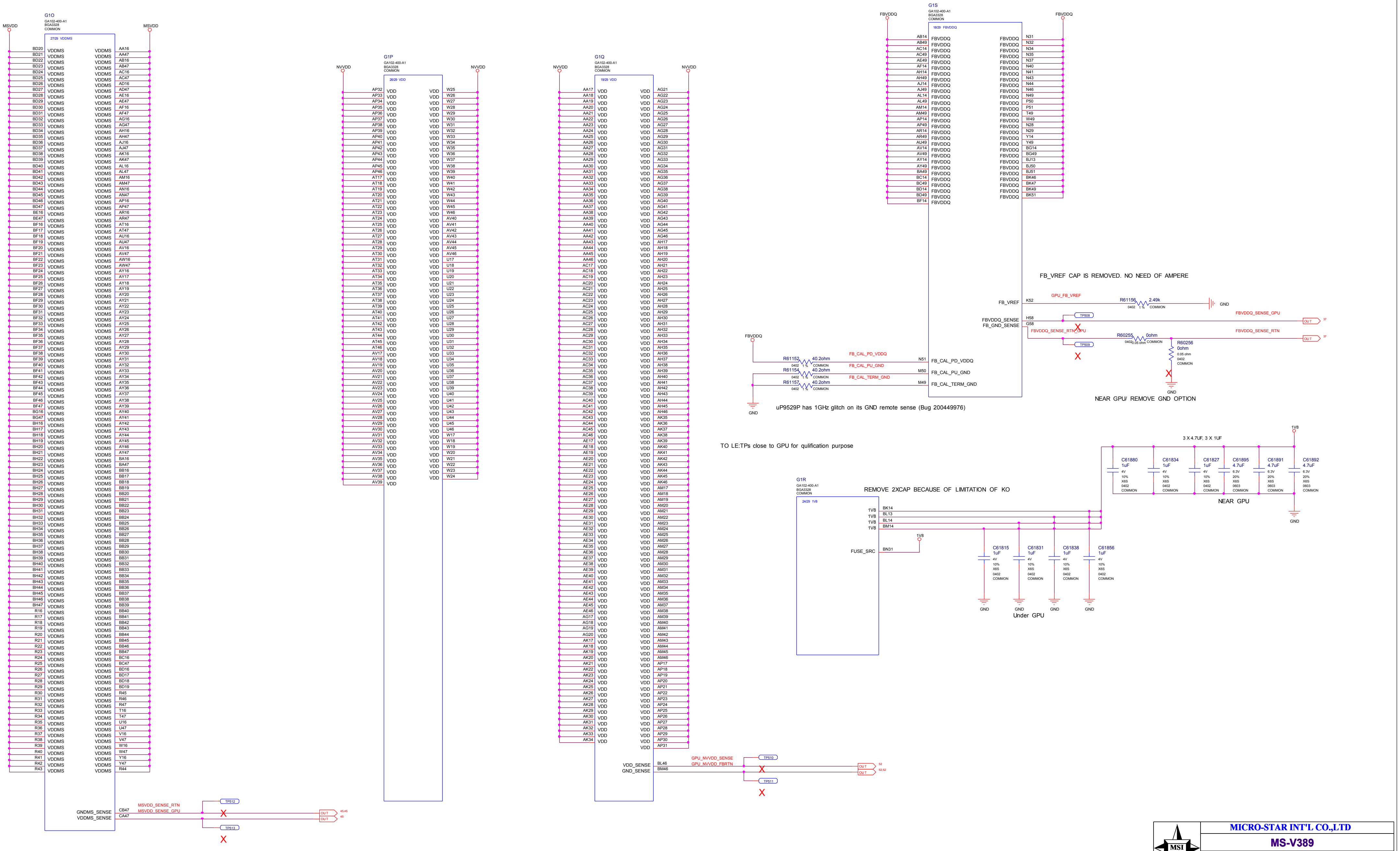
G1O
GA102-400-A1
BGA3328
COMMON
27/29 VDDMS
MSVDD
VDDMS
GNDMS_SENSE
VDDMS_SENSE
CB47
CA47
MSVDD_SENSE_RTN
MSVDD_SENSE_GPU
TP512
TP513
OUT
45,45
45
G1P
GA102-400-A1
BGA3328
COMMON
28/29 VDD
NVVDD
VDD
G1Q
GA102-400-A1
BGA3328
COMMON
19/29 VDD
VDD_SENSE
GND_SENSE
BL46
BM46
GPU_NVVDD_SENSE
GPU_NVVDD_FBRTN
TP510
TP511
52
52,52
G1S
GA102-400-A1
BGA3328
COMMON
18/29 FBVDDQ
FBVDDQ
FB_VREF
K52
GPU_FB_VREF
R61156
2.49k
0402 1 % COMMON
GND
FBVDDQ_SENSE
FB_GND_SENSE
H58
G58
TP508
TP509
FBVDDQ_SENSE_GPU
FBVDDQ_SENSE_RTN_GPU
FBVDDQ_SENSE_RTN
37
R60255
0ohm
0402 0.05 ohm COMMON
R60256
0ohm
0.05 ohm
0402
COMMON
FB_CAL_PD_VDDQ
FB_CAL_PU_GND
FB_CAL_TERM_GND
N51
M50
M49
R61152
R61154
R61157
40.2ohm
0402 1 % COMMON
G1R
GA102-400-A1
BGA3328
COMMON
24/29 1V8
1V8
BK14
BL13
BL14
BM14
FUSE_SRC
BN31
C61815
C61831
C61838
C61856
1uF
4V
10%
X6S
0402
COMMON
C61880
C61834
C61827
1uF
C61895
C61891
C61892
4.7uF
6.3V
20%
X6S
0603
COMMON
X

FB_VREF CAP IS REMOVED. NO NEED OF AMPERE

NEAR GPU/ REMOVE GND OPTION

uP9529P has 1GHz glitch on its GND remote sense (Bug 200449976)

TO LE:TPs close to GPU for qulification purpose

3 X 4.7UF, 3 X 1UF

NEAR GPU

REMOVE 2XCAP BECAUSE OF LIMITATION OF KO

Under GPU

MICRO-STAR INT'L CO.,LTD

MS-V389

Size	Document Description	Rev
Custom	GPU PWR and GND	1.1

Date: Thursday, July 23, 2020 — Sheet 20 of 76

Page 21: GPU: NVVDD DECOUPLING

NVVDD

UNDER GPU

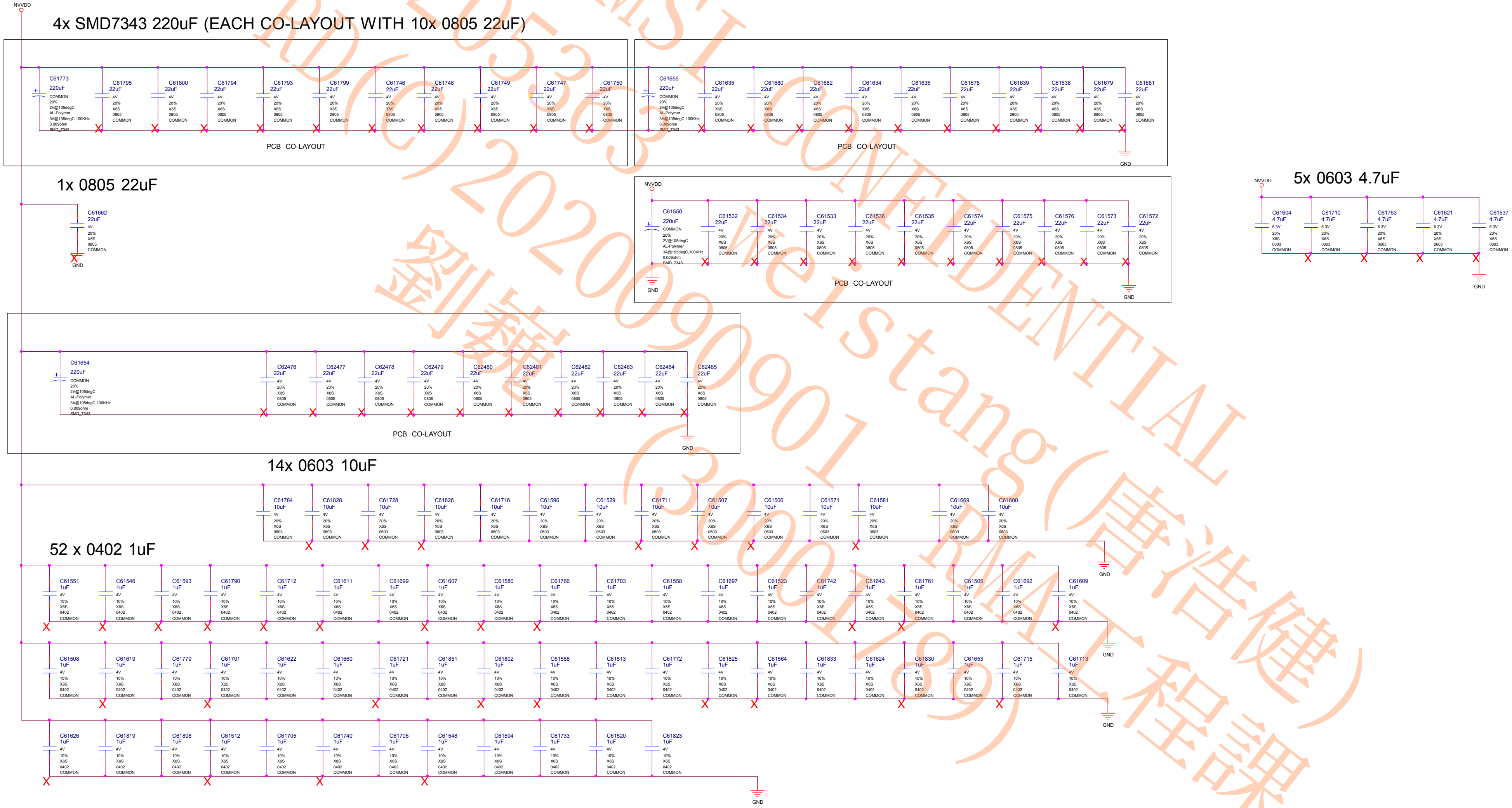
NVVDD
4x SMD7343 220uF (EACH CO-LAYOUT WITH 10x 0805 22uF)
C61773 220uF
C61795 22uF
C61800 22uF
C61794 22uF
C61793 22uF
C61799 22uF
C61746 22uF
C61748 22uF
C61749 22uF
C61747 22uF
C61750 22uF
PCB CO-LAYOUT
C61655 220uF
C61635 22uF
C61680 22uF
C61682 22uF
C61634 22uF
C61636 22uF
C61678 22uF
C61639 22uF
C61638 22uF
C61679 22uF
C61681 22uF
PCB CO-LAYOUT
GND
1x 0805 22uF
C61662 22uF
GND
NVVDD
C61550 220uF
C61532 22uF
C61534 22uF
C61533 22uF
C61536 22uF
C61535 22uF
C61574 22uF
C61575 22uF
C61576 22uF
C61573 22uF
C61572 22uF
PCB CO-LAYOUT
GND
5x 0603 4.7uF
NVVDD
C61604 4.7uF
C61710 4.7uF
C61753 4.7uF
C61621 4.7uF
C61537 4.7uF
GND
C61654 220uF
C62476 22uF
C62477 22uF
C62478 22uF
C62479 22uF
C62480 22uF
C62481 22uF
C62482 22uF
C62483 22uF
C62484 22uF
C62485 22uF
PCB CO-LAYOUT
GND
14x 0603 10uF
C61784 10uF
C61828 10uF
C61728 10uF
C61826 10uF
C61716 10uF
C61596 10uF
C61529 10uF
C61711 10uF
C61507 10uF
C61506 10uF
C61571 10uF
C61581 10uF
C61669 10uF
C61600 10uF
GND
52 x 0402 1uF
C61551 1uF
C61546 1uF
C61593 1uF
C61790 1uF
C61712 1uF
C61611 1uF
C61699 1uF
C61607 1uF
C61580 1uF
C61766 1uF
C61703 1uF
C61558 1uF
C61697 1uF
C61523 1uF
C61742 1uF
C61643 1uF
C61761 1uF
C61505 1uF
C61692 1uF
C61609 1uF
GND
C61508 1uF
C61619 1uF
C61779 1uF
C61701 1uF
C61622 1uF
C61660 1uF
C61721 1uF
C61851 1uF
C61802 1uF
C61588 1uF
C61513 1uF
C61772 1uF
C61825 1uF
C61564 1uF
C61833 1uF
C61624 1uF
C61830 1uF
C61653 1uF
C61715 1uF
C61713 1uF
GND
C61626 1uF
C61819 1uF
C61808 1uF
C61512 1uF
C61705 1uF
C61740 1uF
C61706 1uF
C61548 1uF
C61594 1uF
C61733 1uF
C61520 1uF
C61823 1uF
GND

00205363 RD(C) 20200901 劉薪
MSI CONFIDENTIAL weistang(唐浩倢) (30001789) RMA工程課

MICRO-STAR INT'L CO.,LTD

MS-V389

Size Custom
Document Description: Page 21: GPU: NVVDD DECOUPLING
Rev 1.1
Date: Thursday, July 23, 2020
Sheet 21 of 76

Page 22: GPU: FBVDD DECOUPLING

FBVDDQ

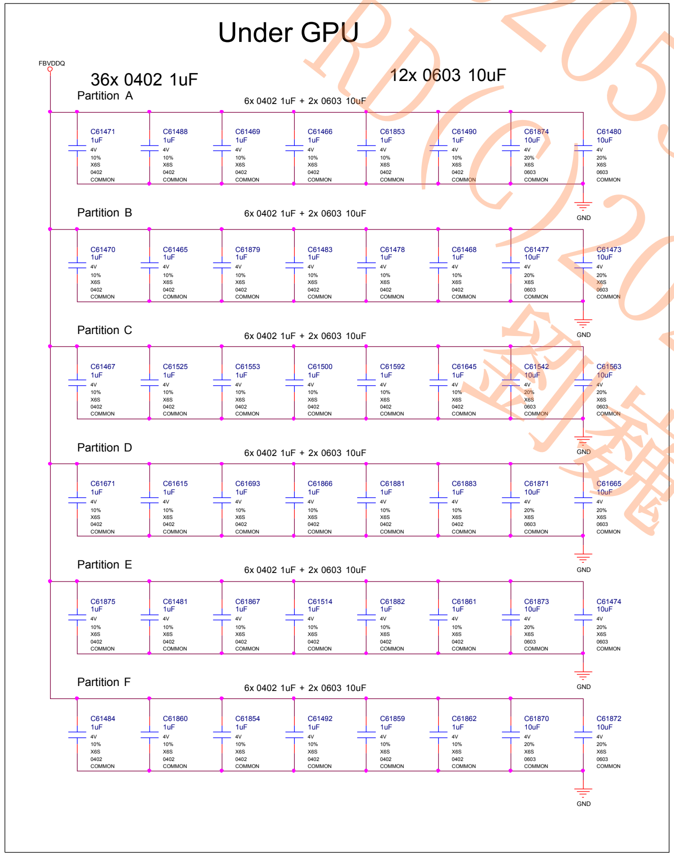

Under GPU
FBVDDQ
36x 0402 1uF
12x 0603 10uF
Partition A
6x 0402 1uF + 2x 0603 10uF
C61471 1uF 4V 10% X6S 0402 COMMON
C61488 1uF 4V 10% X6S 0402 COMMON
C61469 1uF 4V 10% X6S 0402 COMMON
C61466 1uF 4V 10% X6S 0402 COMMON
C61853 1uF 4V 10% X6S 0402 COMMON
C61490 1uF 4V 10% X6S 0402 COMMON
C61874 10uF 4V 20% X6S 0603 COMMON
C61480 10uF 4V 20% X6S 0603 COMMON
GND
Partition B
6x 0402 1uF + 2x 0603 10uF
C61470 1uF 4V 10% X6S 0402 COMMON
C61465 1uF 4V 10% X6S 0402 COMMON
C61879 1uF 4V 10% X6S 0402 COMMON
C61483 1uF 4V 10% X6S 0402 COMMON
C61478 1uF 4V 10% X6S 0402 COMMON
C61468 1uF 4V 10% X6S 0402 COMMON
C61477 10uF 4V 20% X6S 0603 COMMON
C61473 10uF 4V 20% X6S 0603 COMMON
GND
Partition C
6x 0402 1uF + 2x 0603 10uF
C61467 1uF 4V 10% X6S 0402 COMMON
C61525 1uF 4V 10% X6S 0402 COMMON
C61553 1uF 4V 10% X6S 0402 COMMON
C61500 1uF 4V 10% X6S 0402 COMMON
C61592 1uF 4V 10% X6S 0402 COMMON
C61645 1uF 4V 10% X6S 0402 COMMON
C61542 10uF 4V 20% X6S 0603 COMMON
C61563 10uF 4V 20% X6S 0603 COMMON
GND
Partition D
6x 0402 1uF + 2x 0603 10uF
C61671 1uF 4V 10% X6S 0402 COMMON
C61615 1uF 4V 10% X6S 0402 COMMON
C61693 1uF 4V 10% X6S 0402 COMMON
C61866 1uF 4V 10% X6S 0402 COMMON
C61881 1uF 4V 10% X6S 0402 COMMON
C61883 1uF 4V 10% X6S 0402 COMMON
C61871 10uF 4V 20% X6S 0603 COMMON
C61665 10uF 4V 20% X6S 0603 COMMON
GND
Partition E
6x 0402 1uF + 2x 0603 10uF
C61875 1uF 4V 10% X6S 0402 COMMON
C61481 1uF 4V 10% X6S 0402 COMMON
C61867 1uF 4V 10% X6S 0402 COMMON
C61514 1uF 4V 10% X6S 0402 COMMON
C61882 1uF 4V 10% X6S 0402 COMMON
C61861 1uF 4V 10% X6S 0402 COMMON
C61873 10uF 4V 20% X6S 0603 COMMON
C61474 10uF 4V 20% X6S 0603 COMMON
GND
Partition F
6x 0402 1uF + 2x 0603 10uF
C61484 1uF 4V 10% X6S 0402 COMMON
C61860 1uF 4V 10% X6S 0402 COMMON
C61854 1uF 4V 10% X6S 0402 COMMON
C61492 1uF 4V 10% X6S 0402 COMMON
C61859 1uF 4V 10% X6S 0402 COMMON
C61862 1uF 4V 10% X6S 0402 COMMON
C61870 10uF 4V 20% X6S 0603 COMMON
C61872 10uF 4V 20% X6S 0603 COMMON
GND

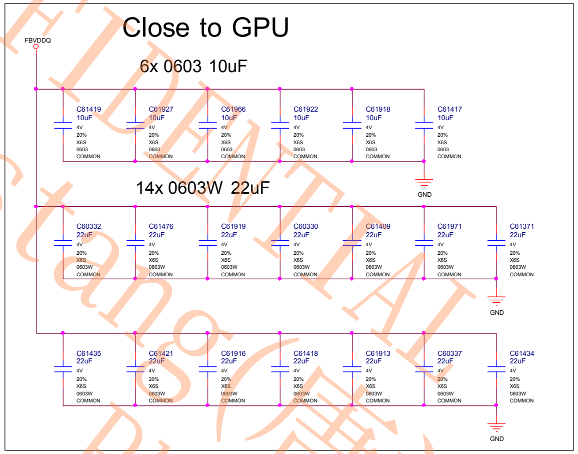

Close to GPU
FBVDDQ
6x 0603 10uF
C61419 10uF 4V 20% X6S 0603 COMMON
C61927 10uF 4V 20% X6S 0603 COMMON
C61966 10uF 4V 20% X6S 0603 COMMON
C61922 10uF 4V 20% X6S 0603 COMMON
C61918 10uF 4V 20% X6S 0603 COMMON
C61417 10uF 4V 20% X6S 0603 COMMON
GND
14x 0603W 22uF
C60332 22uF 4V 20% X6S 0603W COMMON
C61476 22uF 4V 20% X6S 0603W COMMON
C61919 22uF 4V 20% X6S 0603W COMMON
C60330 22uF 4V 20% X6S 0603W COMMON
C61409 22uF 4V 20% X6S 0603W COMMON
C61971 22uF 4V 20% X6S 0603W COMMON
C61371 22uF 4V 20% X6S 0603W COMMON
GND
C61435 22uF 4V 20% X6S 0603W COMMON
C61421 22uF 4V 20% X6S 0603W COMMON
C61916 22uF 4V 20% X6S 0603W COMMON
C61418 22uF 4V 20% X6S 0603W COMMON
C61913 22uF 4V 20% X6S 0603W COMMON
C60337 22uF 4V 20% X6S 0603W COMMON
C61434 22uF 4V 20% X6S 0603W COMMON
GND

MSI CONFIDENTIAL weistang(唐浩倢) RMA工程課
00205363 RD(C)20200901(30001789) 劉巍

MSI
MICRO-STAR INT'L CO.,LTD
MS-V389
Size Custom
Document Description Page 22: GPU: FBVDD DECOUPLING
Rev 1.1
Date: Thursday, July 23, 2020
Sheet 22 of 76

Page 23: GPU: MSVDD DECOUPLING

UNDER GPU

MSVDD

14x 0603 10uF

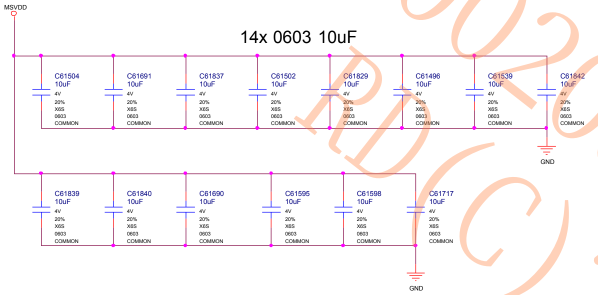
MSVDD
C61504 10uF 4V 20% X6S 0603 COMMON
C61691 10uF 4V 20% X6S 0603 COMMON
C61837 10uF 4V 20% X6S 0603 COMMON
C61502 10uF 4V 20% X6S 0603 COMMON
C61829 10uF 4V 20% X6S 0603 COMMON
C61496 10uF 4V 20% X6S 0603 COMMON
C61539 10uF 4V 20% X6S 0603 COMMON
C61842 10uF 4V 20% X6S 0603 COMMON
GND
C61839 10uF 4V 20% X6S 0603 COMMON
C61840 10uF 4V 20% X6S 0603 COMMON
C61690 10uF 4V 20% X6S 0603 COMMON
C61595 10uF 4V 20% X6S 0603 COMMON
C61598 10uF 4V 20% X6S 0603 COMMON
C61717 10uF 4V 20% X6S 0603 COMMON
GND

47x 0402 1uF

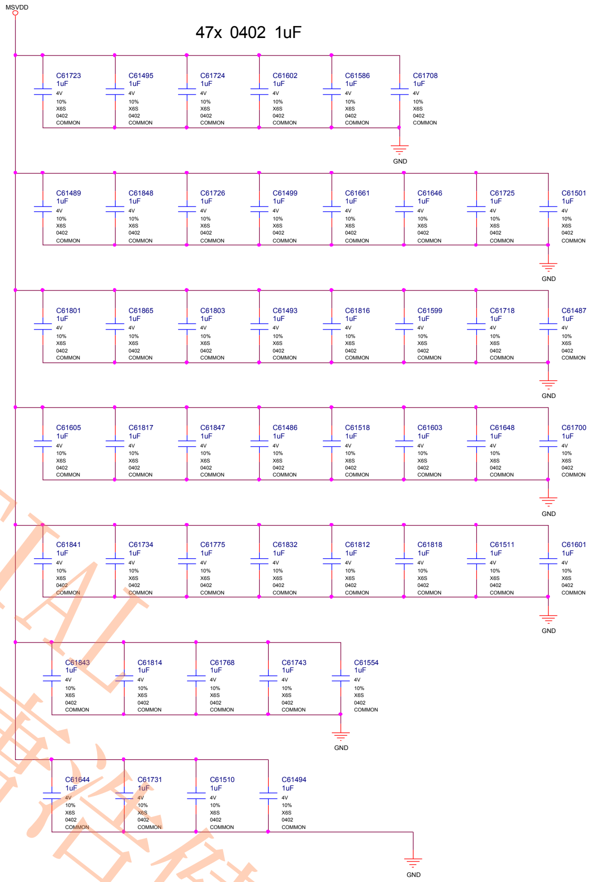
MSVDD
C61723 1uF 4V 10% X6S 0402 COMMON
C61495 1uF 4V 10% X6S 0402 COMMON
C61724 1uF 4V 10% X6S 0402 COMMON
C61602 1uF 4V 10% X6S 0402 COMMON
C61586 1uF 4V 10% X6S 0402 COMMON
C61708 1uF 4V 10% X6S 0402 COMMON
GND
C61489 1uF 4V 10% X6S 0402 COMMON
C61848 1uF 4V 10% X6S 0402 COMMON
C61726 1uF 4V 10% X6S 0402 COMMON
C61499 1uF 4V 10% X6S 0402 COMMON
C61661 1uF 4V 10% X6S 0402 COMMON
C61646 1uF 4V 10% X6S 0402 COMMON
C61725 1uF 4V 10% X6S 0402 COMMON
C61501 1uF 4V 10% X6S 0402 COMMON
GND
C61801 1uF 4V 10% X6S 0402 COMMON
C61865 1uF 4V 10% X6S 0402 COMMON
C61803 1uF 4V 10% X6S 0402 COMMON
C61493 1uF 4V 10% X6S 0402 COMMON
C61816 1uF 4V 10% X6S 0402 COMMON
C61599 1uF 4V 10% X6S 0402 COMMON
C61718 1uF 4V 10% X6S 0402 COMMON
C61487 1uF 4V 10% X6S 0402 COMMON
GND
C61605 1uF 4V 10% X6S 0402 COMMON
C61817 1uF 4V 10% X6S 0402 COMMON
C61847 1uF 4V 10% X6S 0402 COMMON
C61486 1uF 4V 10% X6S 0402 COMMON
C61518 1uF 4V 10% X6S 0402 COMMON
C61603 1uF 4V 10% X6S 0402 COMMON
C61648 1uF 4V 10% X6S 0402 COMMON
C61700 1uF 4V 10% X6S 0402 COMMON
GND
C61841 1uF 4V 10% X6S 0402 COMMON
C61734 1uF 4V 10% X6S 0402 COMMON
C61775 1uF 4V 10% X6S 0402 COMMON
C61832 1uF 4V 10% X6S 0402 COMMON
C61812 1uF 4V 10% X6S 0402 COMMON
C61818 1uF 4V 10% X6S 0402 COMMON
C61511 1uF 4V 10% X6S 0402 COMMON
C61601 1uF 4V 10% X6S 0402 COMMON
GND
C61843 1uF 4V 10% X6S 0402 COMMON
C61814 1uF 4V 10% X6S 0402 COMMON
C61768 1uF 4V 10% X6S 0402 COMMON
C61743 1uF 4V 10% X6S 0402 COMMON
C61554 1uF 4V 10% X6S 0402 COMMON
GND
C61644 1uF 4V 10% X6S 0402 COMMON
C61731 1uF 4V 10% X6S 0402 COMMON
C61510 1uF 4V 10% X6S 0402 COMMON
C61494 1uF 4V 10% X6S 0402 COMMON
GND

REMOVED 3X 1uF 0402 DUE TO SPACE RESTRICTION

2x SMD7343 220uF (EACH CO-LAYOUT WITH 10x 22uF 0805)

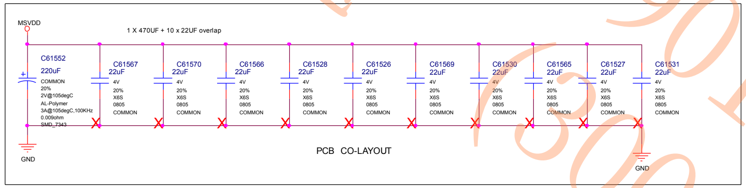
MSVDD
1 X 470UF + 10 x 22UF overlap
C61552 220uF COMMON 20% 2V@105degC AL-Polymer 3A@105degC,100KHz 0.009ohm SMD_7343
C61567 22uF 4V 20% X6S 0805 COMMON
C61570 22uF 4V 20% X6S 0805 COMMON
C61566 22uF 4V 20% X6S 0805 COMMON
C61528 22uF 4V 20% X6S 0805 COMMON
C61526 22uF 4V 20% X6S 0805 COMMON
C61569 22uF 4V 20% X6S 0805 COMMON
C61530 22uF 4V 20% X6S 0805 COMMON
C61565 22uF 4V 20% X6S 0805 COMMON
C61527 22uF 4V 20% X6S 0805 COMMON
C61531 22uF 4V 20% X6S 0805 COMMON
GND
GND

PCB CO-LAYOUT

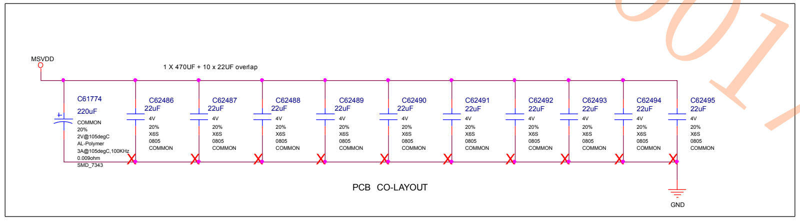
MSVDD
1 X 470UF + 10 x 22UF overlap
C61774 220uF COMMON 20% 2V@105degC AL-Polymer 3A@105degC,100KHz 0.009ohm SMD_7343
C62486 22uF 4V 20% X6S 0805 COMMON
C62487 22uF 4V 20% X6S 0805 COMMON
C62488 22uF 4V 20% X6S 0805 COMMON
C62489 22uF 4V 20% X6S 0805 COMMON
C62490 22uF 4V 20% X6S 0805 COMMON
C62491 22uF 4V 20% X6S 0805 COMMON
C62492 22uF 4V 20% X6S 0805 COMMON
C62493 22uF 4V 20% X6S 0805 COMMON
C62494 22uF 4V 20% X6S 0805 COMMON
C62495 22uF 4V 20% X6S 0805 COMMON
GND

PCB CO-LAYOUT

MSI CONFIDENTIAL
00205363 RD(C)20200901(30001789)
劉巍
weistang(唐浴樺) RMA工程課

MSI
MICRO-STAR INT'L CO.,LTD
MS-V389
Size Custom
Document Description Page 23: GPU: MSVDD DECOUPLING
Rev 1.1
Date: Thursday, July 23, 2020
Sheet 23 of 76

MSI CONFIDENTIAL
00205363 weistang(唐浩傑)
RD(C)20200901 RMA工程課
劉魏 (30001789)

BLANK

NVHS Interface and FRAME LOCK

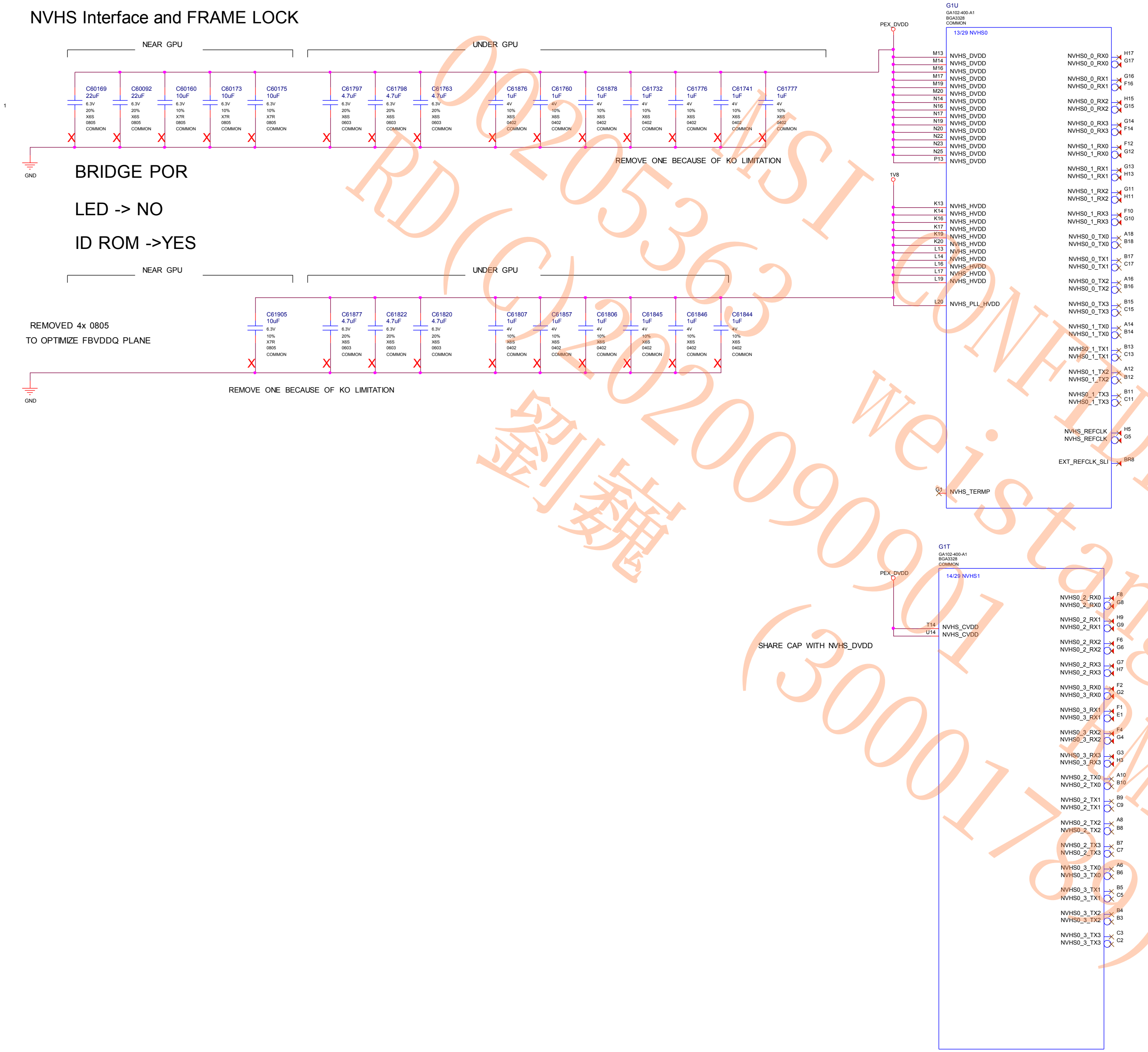
1
NEAR GPU
UNDER GPU
C60169 22uF 6.3V 20% X6S 0805 COMMON
C60092 22uF 6.3V 20% X6S 0805 COMMON
C60160 10uF 6.3V 10% X7R 0805 COMMON
C60173 10uF 6.3V 10% X7R 0805 COMMON
C60175 10uF 6.3V 10% X7R 0805 COMMON
C61797 4.7uF 6.3V 20% X6S 0603 COMMON
C61798 4.7uF 6.3V 20% X6S 0603 COMMON
C61763 4.7uF 6.3V 20% X6S 0603 COMMON
C61876 1uF 4V 10% X6S 0402 COMMON
C61760 1uF 4V 10% X6S 0402 COMMON
C61878 1uF 4V 10% X6S 0402 COMMON
C61732 1uF 4V 10% X6S 0402 COMMON
C61776 1uF 4V 10% X6S 0402 COMMON
C61741 1uF 4V 10% X6S 0402 COMMON
C61777 1uF 4V 10% X6S 0402 COMMON
GND
REMOVE ONE BECAUSE OF KO LIMITATION
NEAR GPU
UNDER GPU
C61905 10uF 6.3V 10% X7R 0805 COMMON
C61877 4.7uF 6.3V 20% X6S 0603 COMMON
C61822 4.7uF 6.3V 20% X6S 0603 COMMON
C61820 4.7uF 6.3V 20% X6S 0603 COMMON
C61807 1uF 4V 10% X6S 0402 COMMON
C61857 1uF 4V 10% X6S 0402 COMMON
C61806 1uF 4V 10% X6S 0402 COMMON
C61845 1uF 4V 10% X6S 0402 COMMON
C61846 1uF 4V 10% X6S 0402 COMMON
C61844 1uF 4V 10% X6S 0402 COMMON
GND
REMOVE ONE BECAUSE OF KO LIMITATION
G1U
GA102-400-A1
BGA3328
COMMON
13/29 NVHS0
PEX_DVDD
M13 NVHS_DVDD
M14 NVHS_DVDD
M16 NVHS_DVDD
M17 NVHS_DVDD
M19 NVHS_DVDD
M20 NVHS_DVDD
N14 NVHS_DVDD
N16 NVHS_DVDD
N17 NVHS_DVDD
N19 NVHS_DVDD
N20 NVHS_DVDD
N22 NVHS_DVDD
N23 NVHS_DVDD
N25 NVHS_DVDD
P13 NVHS_DVDD
1V8
K13 NVHS_HVDD
K14 NVHS_HVDD
K16 NVHS_HVDD
K17 NVHS_HVDD
K19 NVHS_HVDD
K20 NVHS_HVDD
L13 NVHS_HVDD
L14 NVHS_HVDD
L16 NVHS_HVDD
L17 NVHS_HVDD
L19 NVHS_HVDD
L20 NVHS_PLL_HVDD
G1 NVHS_TERMP
NVHS0_0_RX0 H17
NVHS0_0_RX0 G17
NVHS0_0_RX1 G16
NVHS0_0_RX1 F16
NVHS0_0_RX2 H15
NVHS0_0_RX2 G15
NVHS0_0_RX3 G14
NVHS0_0_RX3 F14
NVHS0_1_RX0 F12
NVHS0_1_RX0 G12
NVHS0_1_RX1 G13
NVHS0_1_RX1 H13
NVHS0_1_RX2 G11
NVHS0_1_RX2 H11
NVHS0_1_RX3 F10
NVHS0_1_RX3 G10
NVHS0_0_TX0 A18
NVHS0_0_TX0 B18
NVHS0_0_TX1 B17
NVHS0_0_TX1 C17
NVHS0_0_TX2 A16
NVHS0_0_TX2 B16
NVHS0_0_TX3 B15
NVHS0_0_TX3 C15
NVHS0_1_TX0 A14
NVHS0_1_TX0 B14
NVHS0_1_TX1 B13
NVHS0_1_TX1 C13
NVHS0_1_TX2 A12
NVHS0_1_TX2 B12
NVHS0_1_TX3 B11
NVHS0_1_TX3 C11
NVHS_REFCLK H5
NVHS_REFCLK G5
EXT_REFCLK_SLI BR8
G1T
GA102-400-A1
BGA3328
COMMON
14/29 NVHS1
PEX_DVDD
T14 NVHS_CVDD
U14 NVHS_CVDD
SHARE CAP WITH NVHS_DVDD
NVHS0_2_RX0 F8
NVHS0_2_RX0 G8
NVHS0_2_RX1 H9
NVHS0_2_RX1 G9
NVHS0_2_RX2 F6
NVHS0_2_RX2 G6
NVHS0_2_RX3 G7
NVHS0_2_RX3 H7
NVHS0_3_RX0 F2
NVHS0_3_RX0 G2
NVHS0_3_RX1 F1
NVHS0_3_RX1 E1
NVHS0_3_RX2 F4
NVHS0_3_RX2 G4
NVHS0_3_RX3 G3
NVHS0_3_RX3 H3
NVHS0_2_TX0 A10
NVHS0_2_TX0 B10
NVHS0_2_TX1 B9
NVHS0_2_TX1 C9
NVHS0_2_TX2 A8
NVHS0_2_TX2 B8
NVHS0_2_TX3 B7
NVHS0_2_TX3 C7
NVHS0_3_TX0 A6
NVHS0_3_TX0 B6
NVHS0_3_TX1 B5
NVHS0_3_TX1 C5
NVHS0_3_TX2 B4
NVHS0_3_TX2 B3
NVHS0_3_TX3 C3
NVHS0_3_TX3 C2

BRIDGE POR

LED -> NO

ID ROM ->YES

REMOVED 4x 0805
TO OPTIMIZE FBVDDQ PLANE

00205363 MSI CONFIDENTIAL
RD(C)2020090901 劉巍
weistang(唐浩傑)
(30001783) MA工程課

MICRO-STAR INT'L CO.,LTD

MS-V389

Size Custom
Document Description
NVHS Interface and FRAME LOCK
Rev 1.1
Date: Thursday, July 23, 2020
Sheet 25 of 76

MISC1: Fan, Thermal, JTAG, GPIO, STEREO

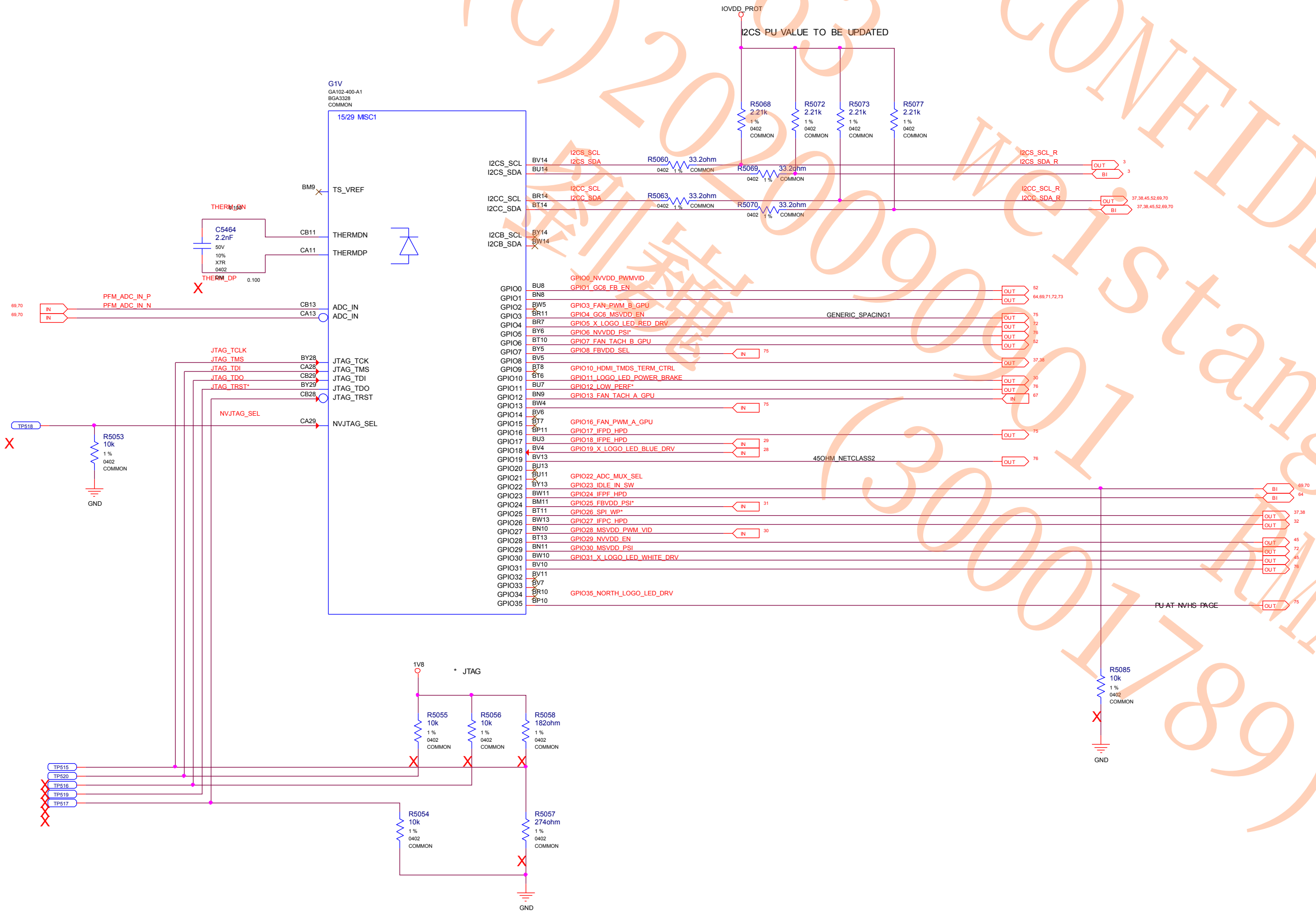
IOVDD_PROT
I2CS PU VALUE TO BE UPDATED
R5068 2.21k 1 % 0402 COMMON
R5072 2.21k 1 % 0402 COMMON
R5073 2.21k 1 % 0402 COMMON
R5077 2.21k 1 % 0402 COMMON
G1V
GA102-400-A1
BGA3328
COMMON
15/29 MISC1
BM9 TS_VREF
THERM_DN
0.100
C5464 2.2nF 50V 10% X7R 0402
DNI
THERM_DP
0.100
CB11 THERMDN
CA11 THERMDP
PFM_ADC_IN_P
PFM_ADC_IN_N
69,70 IN
69,70 IN
CB13 ADC_IN
CA13 ADC_IN
JTAG_TCLK
JTAG_TMS
JTAG_TDI
JTAG_TDO
JTAG_TRST*
BY28 JTAG_TCK
CA28 JTAG_TMS
CB29 JTAG_TDI
BY29 JTAG_TDO
CB28 JTAG_TRST
NVJTAG_SEL
CA29 NVJTAG_SEL
TP518
R5053 10k 1 % 0402 COMMON
GND
I2CS_SCL BV14
I2CS_SDA BU14
I2CS_SCL
I2CS_SDA
R5060 33.2ohm 0402 1 % COMMON
R5069 33.2ohm 0402 1 % COMMON
I2CS_SCL_R
I2CS_SDA_R
OUT 3
BI 3
I2CC_SCL BR14
I2CC_SDA BT14
I2CC_SCL
I2CC_SDA
R5063 33.2ohm 0402 1 % COMMON
R5070 33.2ohm 0402 1 % COMMON
I2CC_SCL_R
I2CC_SDA_R
OUT 37,38,45,52,69,70
BI 37,38,45,52,69,70
I2CB_SCL BY14
I2CB_SDA BW14
GPIO0 BU8 GPIO0_NVVDD_PWMVID OUT 52
GPIO1 BN8 GPIO1_GC6_FB_EN OUT 64,69,71,72,73
GPIO2 BW5
GPIO3 BR11 GPIO3_FAN_PWM_B_GPU OUT 75
GPIO4 BR7 GPIO4_GC6_MSVDD_EN OUT 72
GPIO5 BY6 GPIO5_X_LOGO_LED_RED_DRV OUT 76
GPIO6 BT10 GPIO6_NVVDD_PSI* OUT 52
GPIO7 BY5 GPIO7_FAN_TACH_B_GPU IN 75
GPIO8 BV5 GPIO8_FBVDD_SEL OUT 37,38
GENERIC_SPACING1
GPIO9 BT8
GPIO10 BT6 GPIO10_HDMI_TMDS_TERM_CTRL OUT 30
GPIO11 BU7 GPIO11_LOGO_LED_POWER_BRAKE OUT 76
GPIO12 BN9 GPIO12_LOW_PERF* IN 67
GPIO13 BW4 GPIO13_FAN_TACH_A_GPU IN 75
GPIO14 BV6
GPIO15 BT7
GPIO16 BP11 GPIO16_FAN_PWM_A_GPU OUT 75
GPIO17 BU3 GPIO17_IFPD_HPD IN 29
GPIO18 BV4 GPIO18_IFPE_HPD IN 28
GPIO19 BV13 GPIO19_X_LOGO_LED_BLUE_DRV OUT 76
45OHM_NETCLASS2
GPIO20 BU13
GPIO21 BU11
GPIO22 BY13 GPIO22_ADC_MUX_SEL BI 69,70
GPIO23 BW11 GPIO23_IDLE_IN_SW BI 64
GPIO24 BM11 GPIO24_IFPF_HPD IN 31
GPIO25 BT11 GPIO25_FBVDD_PSI* OUT 37,38
GPIO26 BW13 GPIO26_SPI_WP* OUT 32
GPIO27 BN10 GPIO27_IFPC_HPD IN 30
GPIO28 BT13 GPIO28_MSVDD_PWM_VID OUT 45
GPIO29 BN11 GPIO29_NVVDD_EN OUT 72
GPIO30 BW10 GPIO30_MSVDD_PSI OUT 45
GPIO31 BV10 GPIO31_X_LOGO_LED_WHITE_DRV OUT 76
GPIO32 BV11
GPIO33 BV7
GPIO34 BR10
GPIO35 BP10 GPIO35_NORTH_LOGO_LED_DRV
PU AT NVHS PAGE
OUT 75
R5085 10k 1 % 0402 COMMON
GND
1V8
* JTAG
R5055 10k 1 % 0402 COMMON
R5056 10k 1 % 0402 COMMON
R5058 182ohm 1 % 0402 COMMON
TP515
TP520
TP516
TP519
TP517
R5054 10k 1 % 0402 COMMON
R5057 274ohm 1 % 0402 COMMON
GND

MSI CONFIDENTIAL
weistang(唐浩倢)RMA工程課
00205363
RD(C)2020090901
(30001789)

MICRO-STAR INT'L CO.,LTD

MS-V389

Size	Document Description	Rev
Custom	MISC1: Fan, Thermal, JTAG, GPIO, STEREO	1.1

Date: Thursday, July 23, 2020

IFPA UNUSED, IFPB UNUSED

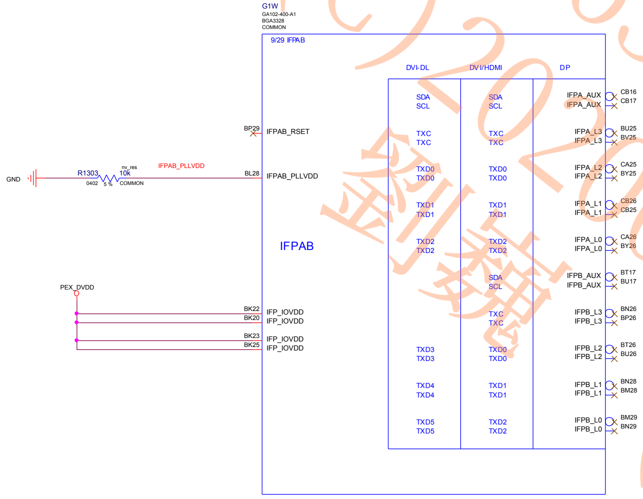
G1W
GA102-400-A1
BGA3328
COMMON
9/29 IFPAB
IFPAB
DVI-DL
DVI/HDMI
DP
SDA
SCL
TXC
TXC
TXD0
TXD0
TXD1
TXD1
TXD2
TXD2
TXD3
TXD3
TXD4
TXD4
TXD5
TXD5
SDA
SCL
TXC
TXC
TXD0
TXD0
TXD1
TXD1
TXD2
TXD2
SDA
SCL
TXC
TXC
TXD0
TXD0
TXD1
TXD1
TXD2
TXD2
BP29
IFPAB_RSET
GND
R1303
nv_res
10k
0402
5 %
COMMON
IFPAB_PLLVDD
BL28
IFPAB_PLLVDD
PEX_DVDD
BK22
BK20
BK23
BK25
IFP_IOVDD
IFP_IOVDD
IFP_IOVDD
IFP_IOVDD
IFPA_AUX
IFPA_AUX
IFPA_L3
IFPA_L3
IFPA_L2
IFPA_L2
IFPA_L1
IFPA_L1
IFPA_L0
IFPA_L0
IFPB_AUX
IFPB_AUX
IFPB_L3
IFPB_L3
IFPB_L2
IFPB_L2
IFPB_L1
IFPB_L1
IFPB_L0
IFPB_L0
CB16
CB17
BU25
BV25
CA25
BY25
CB26
CB25
CA26
BY26
BT17
BU17
BN26
BP26
BT26
BU26
BN28
BM28
BM29
BN29

MSI CONFIDENTIAL
00205363 weistang(唐浩倢)
RD(C)20200901 RMA工程課
劉赫(30001789)

MICRO-STAR INT'L CO.,LTD

MS-V389

Size	Document Description	Rev
Custom	IFPA UNUSED, IFPB UNUSED	1.1

Date: Thursday, July 23, 2020 | Sheet 27 of 76

IFPE DP

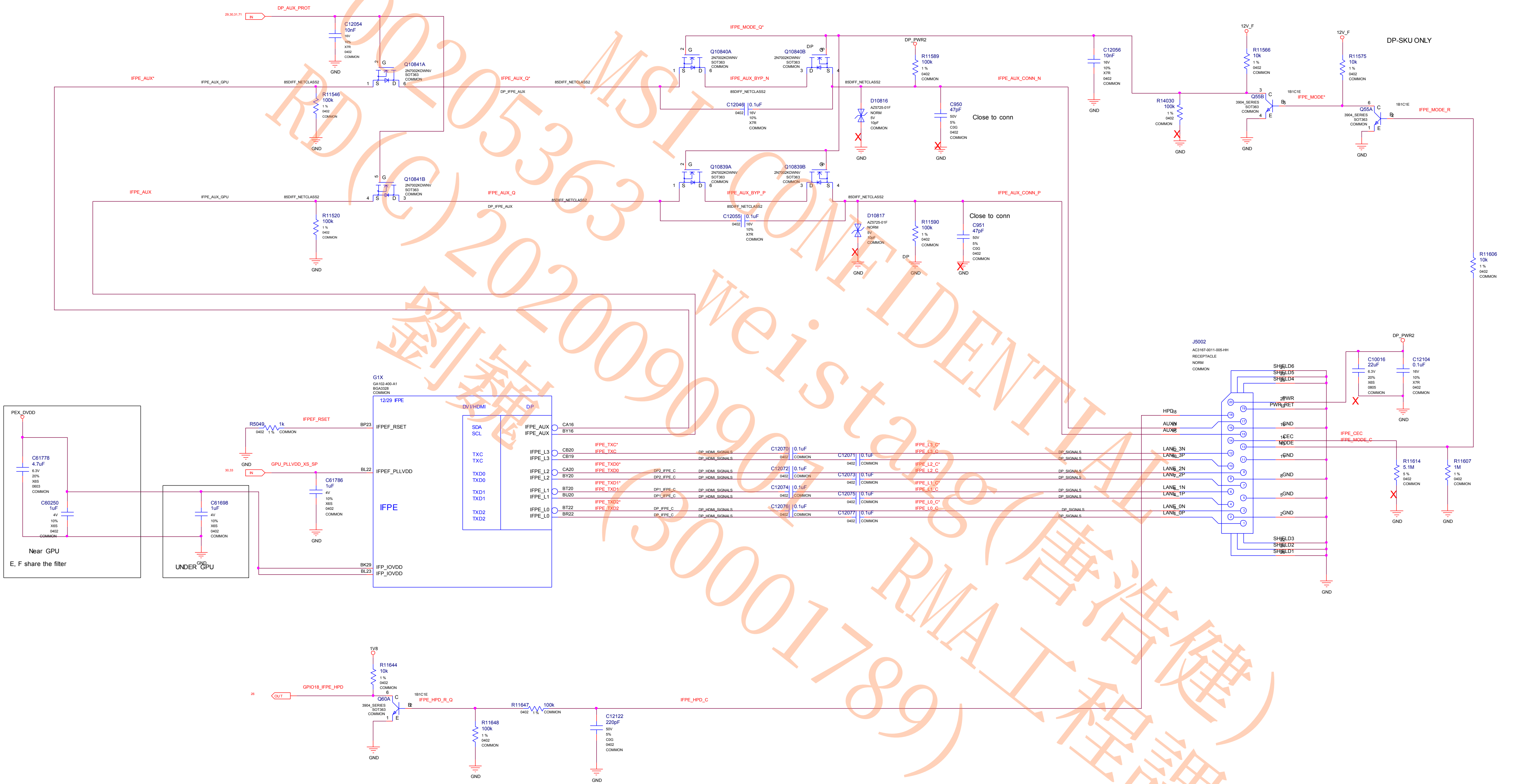

DP_AUX_PROT
IN
C12054 10nF 16V 10% X7R 0402 COMMON
GND
Q10841A 2N7002KDWNV SOT363 COMMON
IFPE_AUX*
IFPE_AUX_GPU
85DIFF_NETCLASS2
R11546 100k 1% 0402 COMMON
IFPE_AUX_Q*
DP_IFPE_AUX
IFPE_MODE_Q*
Q10840A 2N7002KDWNV SOT363 COMMON
Q10840B 2N7002KDWNV SOT363 COMMON
DP
IFPE_AUX_BYP_N
C12046 0.1uF 16V 10% X7R COMMON
DP_PWR2
R11589 100k 1% 0402 COMMON
D10816 AZ5725-01F NORM 5V 10pF COMMON
C950 47pF 50V 5% C0G 0402 COMMON
Close to conn
IFPE_AUX_CONN_N
C12056 10nF 16V 10% X7R 0402 COMMON
12V_F
R11566 10k 1% 0402 COMMON
R14030 100k 1% 0402 COMMON
Q55B 3904_SERIES SOT363 COMMON
1B1C1E
IFPE_MODE*
R11575 10k 1% 0402 COMMON
DP-SKU ONLY
Q55A 3904_SERIES SOT363 COMMON
IFPE_MODE_R
IFPE_AUX
Q10841B 2N7002KDWNV SOT363 COMMON
R11520 100k 1% 0402 COMMON
IFPE_AUX_Q
Q10839A 2N7002KDWNV SOT363 COMMON
Q10839B 2N7002KDWNV SOT363 COMMON
IFPE_AUX_BYP_P
C12055 0.1uF 16V 10% X7R COMMON
D10817 AZ5725-01F NORM 5V 10pF COMMON
R11590 100k 1% 0402 COMMON
C951 47pF 50V 5% C0G 0402 COMMON
IFPE_AUX_CONN_P
R11606 10k 1% 0402 COMMON
J5002 AC3167-0011-005-HH RECEPTACLE NORM COMMON
C10016 22uF 6.3V 20% X6S 0805 COMMON
C12104 0.1uF 16V 10% X7R 0402 COMMON
SHIELD6 SHIELD5 SHIELD4
PWR PWR_RET
HPD AUXN AUXP
GND CEC MODE
LANE_3N LANE_3P LANE_2N LANE_2P LANE_1N LANE_1P LANE_0N LANE_0P
SHIELD3 SHIELD2 SHIELD1
IFPE_CEC
IFPE_MODE_C
R11614 5.1M 5% 0402 COMMON
R11607 1M 1% 0402 COMMON
G1X GA102-400-A1 BGA3328 COMMON
12/29 IFPE
DVI/HDMI
DP
SDA SCL TXC TXC TXD0 TXD0 TXD1 TXD1 TXD2 TXD2
IFPE_AUX IFPE_AUX
IFPE_L3 IFPE_L3 IFPE_L2 IFPE_L2 IFPE_L1 IFPE_L1 IFPE_L0 IFPE_L0
CA16 BY16 CB20 CB19 CA20 BY20 BT20 BU20 BT22 BR22
IFPEF_RSET
IFPEF_PLLVDD
IFPE
IFP_IOVDD IFP_IOVDD
BP23 BL22 BK29 BL23
R5049 1k 0402 1% COMMON
IFPEF_RSET
GPU_PLLVDD_XS_SP
C61786 1uF 4V 10% X6S 0402 COMMON
PEX_DVDD
C61778 4.7uF 6.3V 20% X6S 0603 COMMON
C60250 1uF 4V 10% X6S 0402 COMMON
C61698 1uF 4V 10% X6S 0402 COMMON
Near GPU
E, F share the filter
UNDER GPU
IFPE_TXC* IFPE_TXC IFPE_TXD0* IFPE_TXD0 IFPE_TXD1* IFPE_TXD1 IFPE_TXD2* IFPE_TXD2
DP2_IFPE_C DP1_IFPE_C DP_IFPE_C
DP_HDMI_SIGNALS
C12070 0.1uF C12071 0.1uF C12072 0.1uF C12073 0.1uF C12074 0.1uF C12075 0.1uF C12076 0.1uF C12077 0.1uF
IFPE_L3_C* IFPE_L3_C IFPE_L2_C* IFPE_L2_C IFPE_L1_C* IFPE_L1_C IFPE_L0_C* IFPE_L0_C
DP_SIGNALS
1V8
R11644 10k 1% 0402 COMMON
GPIO18_IFPE_HPD
OUT
Q60A 3904_SERIES SOT363 COMMON
IFPE_HPD_R_Q
R11647 100k 0402 1% COMMON
IFPE_HPD_C
R11648 100k 1% 0402 COMMON
C12122 220pF 50V 5% C0G 0402 COMMON
GND

MICRO-STAR INT'L CO.,LTD

MS-V389

Size	Document Description	Rev
Custom	IFPE DP	1.1

Date: Thursday, July 23, 2020 Sheet 28 of 76

00205363 RD(c)20200909 劉巍
MSI CONFIDENTIAL weistang(唐浩棟) (30001789) RMA工程課

IFPD DP

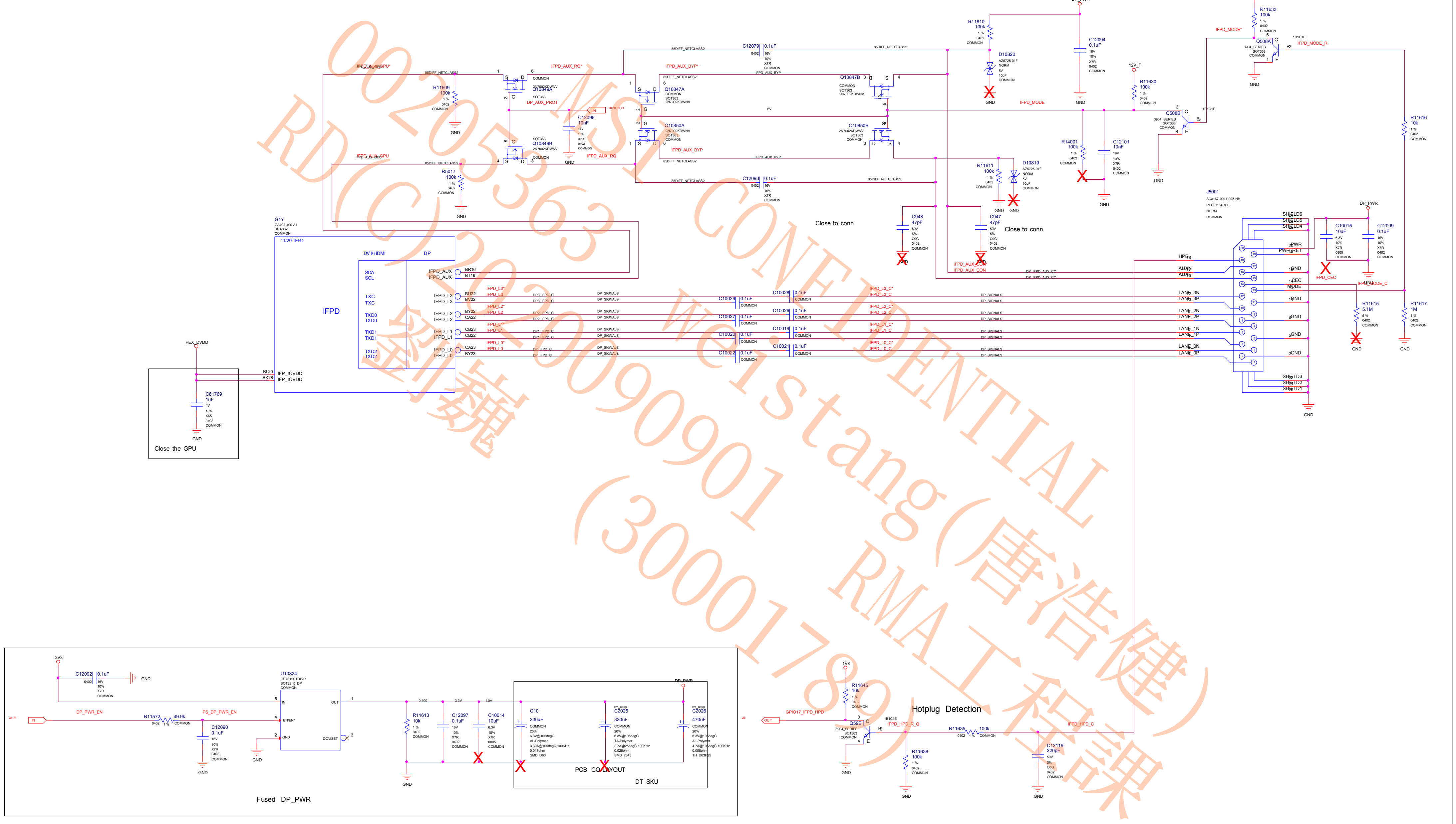

DP_PWR
12V_F
R11633 100k
R11610 100k
C12094 0.1uF
D10820
IFPD_MODE*
IFPD_MODE_R
Q508A
Q508B
R11630 100k
IFPD_MODE
R11616 10k
C12079 0.1uF
85DIFF_NETCLASS2
IFPD_AUX_GPU*
IFPD_AUX_RQ*
IFPD_AUX_BYP*
R11609 100k
Q10849A
Q10849B
Q10847A
Q10847B
Q10850A
Q10850B
DP_AUX_PROT
C12096 10nF
IFPD_AUX_GPU
IFPD_AUX_RQ
IFPD_AUX_BYP
R5017 100k
C12093 0.1uF
R14001 100k
C12101 10nF
R11611 100k
D10819
J5001
AC3167-0011-005-HH
RECEPTACLE
C948 47pF
C947 47pF
Close to conn
Close to conn
C10015 10uF
C12099 0.1uF
G1Y
11/29 IFPD
DVI/HDMI
DP
SDA
SCL
IFPD_AUX
IFPD_AUX
TXC
TXC
TXD0
TXD0
TXD1
TXD1
TXD2
TXD2
IFPD_L3
IFPD_L3
IFPD_L2
IFPD_L2
IFPD_L1
IFPD_L1
IFPD_L0
IFPD_L0
IFPD
IFP_IOVDD
IFP_IOVDD
C10028 0.1uF
C10029 0.1uF
C10026 0.1uF
C10027 0.1uF
C10019 0.1uF
C10020 0.1uF
C10021 0.1uF
C10022 0.1uF
DP_SIGNALS
IFPD_AUX_CON
DP_IFPD_AUX_CO
HPD
AUXN
AUXP
LANE_3N
LANE_3P
LANE_2N
LANE_2P
LANE_1N
LANE_1P
LANE_0N
LANE_0P
SHIELD1
SHIELD2
SHIELD3
SHIELD4
SHIELD5
SHIELD6
PWR
PWR_RET
GND
CEC
MODE
IFPD_CEC
IFPD_MODE_C
R11615 5.1M
R11617 1M
PEX_DVDD
C61769 1uF
Close the GPU
3V3
C12092 0.1uF
U10824
GS7615STDB-R
IN
OUT
EN/EN*
GND
OC*/SET
DP_PWR_EN
PS_DP_PWR_EN
R11572 49.9k
C12090 0.1uF
R11613 10k
C12097 0.1uF
C10014 10uF
C10 330uF
C2025 330uF
C2026 470uF
PCB CO-LAYOUT
DT SKU
Fused DP_PWR
1V8
R11645 10k
GPIO17_IFPD_HPD
Q59B
IFPD_HPD_R_Q
R11635 100k
IFPD_HPD_C
R11638 100k
C12119 220pF
Hotplug Detection

00205363 MSI CONFIDENTIAL RD(C)20200901 weistang(唐浩棟)(30001789) RMA工程課 劉巍

MICRO-STAR INT'L CO.,LTD

MS-V389

Size	Document Description	Rev
Custom	IFPD DP	1.1

Date: Thursday, July 23, 2020 | Sheet 29 of 76

IFPC HDMI/DP

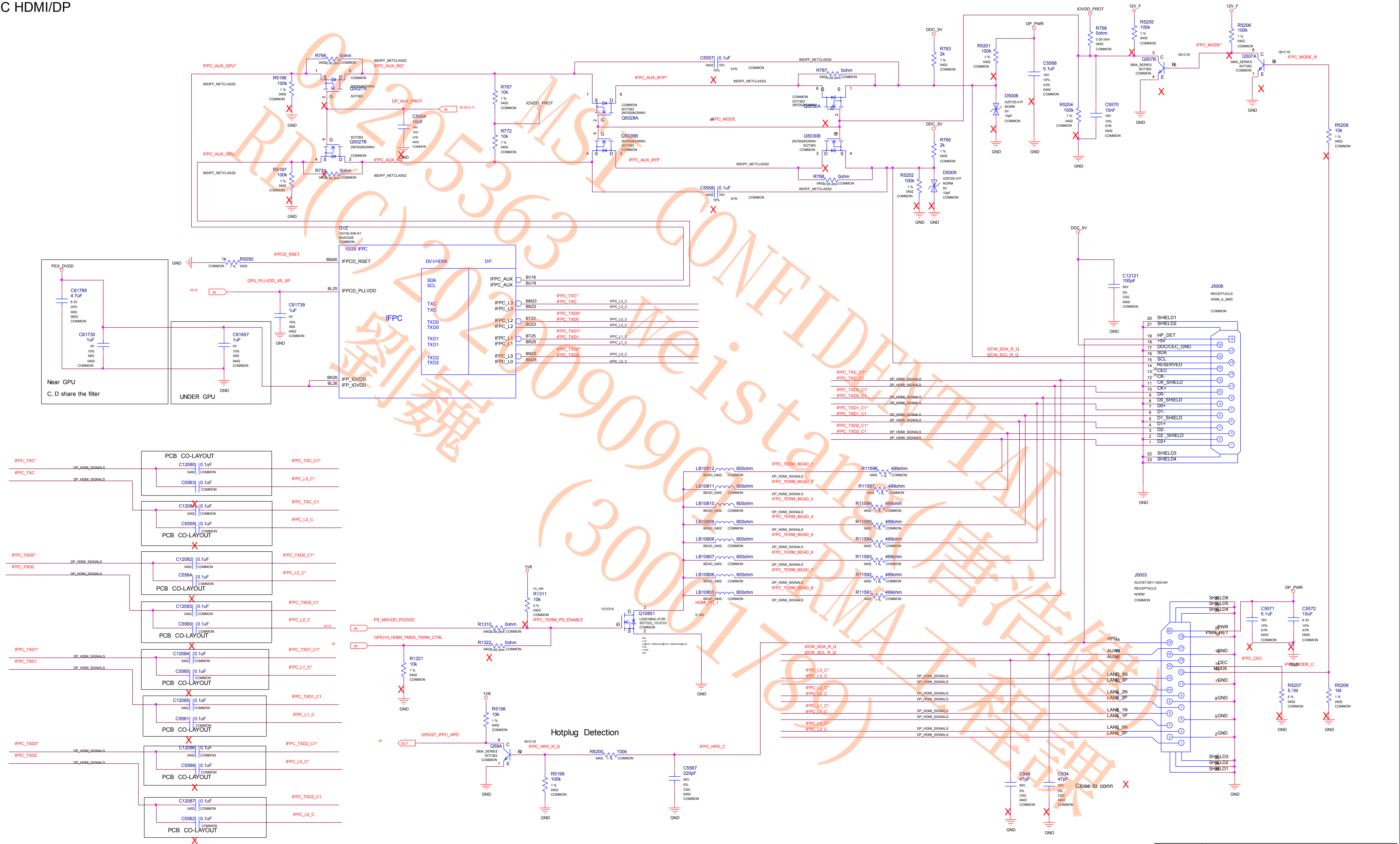

IFPC_AUX_GPU*
IFPC_AUX_GPU
IFPC_AUX_RQ*
IFPC_AUX_RQ
DP_AUX_PROT
IOVDD_PROT
IFPC_AUX_BYP*
IFPC_AUX_BYP
IFPC_MODE
IFPC_MODE*
IFPC_MODE_R
DDC_5V
DP_PWR
12V_F
85DIFF_NETCLASS2
Q5027A
Q5027B
Q5028A
Q5028B
Q5030A
Q5030B
Q507A
Q507B
D5008
D5009
GPU_PLLVDD_XS_SP
IFPCD_RSET
PEX_DVDD
Near GPU
C, D share the filter
UNDER GPU
G1Z
GA102-400-A1
BGA3328
COMMON
10/29 IFPC
IFPCD_RSET
IFPCD_PLLVDD
IFP_IOVDD
DVI/HDMI
DP
IFPC
IFPC_AUX
IFPC_L3
IFPC_L2
IFPC_L1
IFPC_L0
IFPC_TXC*
IFPC_TXC
IFPC_TXD0*
IFPC_TXD0
IFPC_TXD1*
IFPC_TXD1
IFPC_TXD2*
IFPC_TXD2
I2CW_SDA_R_Q
I2CW_SCL_R_Q
J5006
RECEPTACLE
HDMI_A_SMD
SHIELD1
SHIELD2
HP_DET
+5V
DDC/CEC_GND
SDA
SCL
RESERVED
CEC
CK-
CK_SHIELD
CK+
D0-
D0_SHIELD
D0+
D1-
D1_SHIELD
D1+
D2-
D2_SHIELD
D2+
SHIELD3
SHIELD4
PCB CO-LAYOUT
IFPC_TERM_BEAD_1
IFPC_TERM_BEAD_2
IFPC_TERM_BEAD_3
IFPC_TERM_BEAD_4
IFPC_TERM_BEAD_5
IFPC_TERM_BEAD_6
IFPC_TERM_BEAD_7
IFPC_TERM_BEAD_8
HDMI_PD_1
PS_MSVDD_PGOOD
GPIO10_HDMI_TMDS_TERM_CTRL
IFPC_TERM_PD_ENABLE
Q10851
Hotplug Detection
GPIO27_IFPC_HPD
IFPC_HPD_R_Q
IFPC_HPD_C
Q59A
J5003
AC3167-0011-005-HH
RECEPTACLE
HPD
AUXP
AUXN
CEC
MODE
LANE_3N
LANE_3P
LANE_2N
LANE_2P
LANE_1N
LANE_1P
LANE_0N
LANE_0P
PWR
PWR_RET
IFPC_CEC
Close to conn
GND
1V8

MSI CONFIDENTIAL weistang(唐浩清)(30001785) RD(C) 20230909 刘巍

MICRO-STAR INT'L CO.,LTD

MS-V389

Size	Document Description	Rev
Custom	IFPC HDMI/DP	1.1

Date: Thursday, July 23, 2020 Sheet 30 of 76

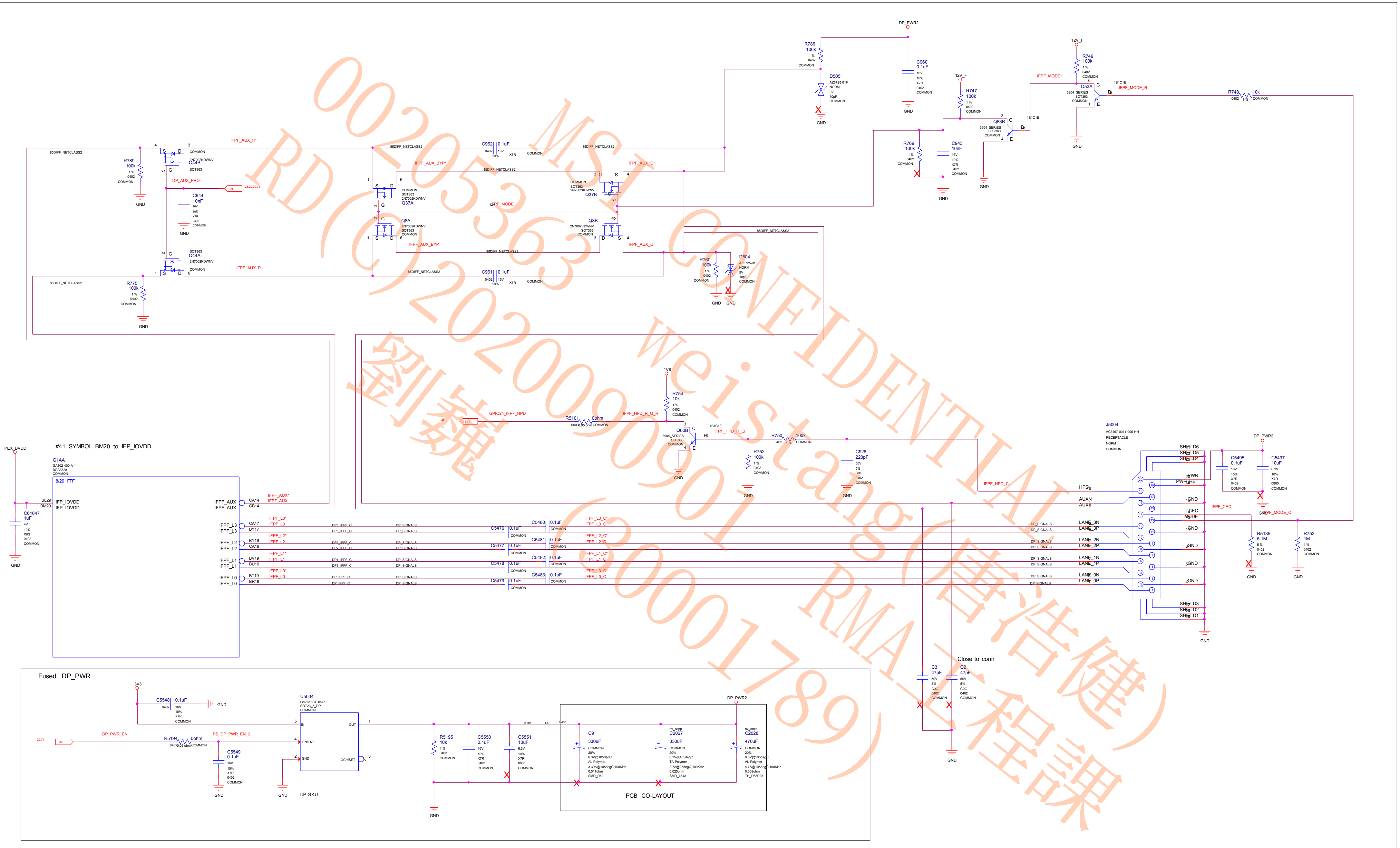

#41 SYMBOL BM20 to IFP_IOVDD
PEX_DVDD
G1AA
GA102-400-A1
BGA3328
COMMON
8/29 IFPF
IFP_IOVDD
IFPF_AUX
IFPF_L3
IFPF_L2
IFPF_L1
IFPF_L0
C61647
1uF
GND
Q44B
Q44A
Q37A
Q37B
Q8A
Q8B
2N7002KDWNV
SOT363
R789
100k
R775
100k
C944
10nF
DP_AUX_PROT
IFPF_AUX_R*
IFPF_AUX_R
IFPF_AUX_BYP*
IFPF_AUX_BYP
IFPF_AUX_C*
IFPF_AUX_C
IFPF_MODE
C962
0.1uF
C961
0.1uF
85DIFF_NETCLASS2
DP_PWR2
R786
100k
D505
AZ5725-01F
C960
0.1uF
12V_F
R747
100k
R769
100k
C943
10nF
Q53B
Q53A
3904_SERIES
R749
100k
IFPF_MODE*
IFPF_MODE_R
R748
10k
R760
100k
D504
AZ5725-01F
1V8
R754
10k
GPIO24_IFPF_HPD
R5101
0ohm
IFPF_HPD_R_Q_R
Q60B
IFPF_HPD_R_Q
R750
100k
R752
100k
C928
220pF
IFPF_HPD_C
J5004
AC3167-0011-005-HH
RECEPTACLE
NORM
COMMON
C5495
0.1uF
C5497
10uF
IFPF_CEC
IFPF_MODE_C
R5135
5.1M
R753
1M
HPD
AUXN
AUXP
CEC
MODE
PWR
PWR_RET
LANE_3N
LANE_3P
LANE_2N
LANE_2P
LANE_1N
LANE_1P
LANE_0N
LANE_0P
SHIELD1
SHIELD2
SHIELD3
SHIELD4
SHIELD5
SHIELD6
C5476
C5477
C5478
C5479
C5480
C5481
C5482
C5483
0.1uF
IFPF_L3_C*
IFPF_L3_C
IFPF_L2_C*
IFPF_L2_C
IFPF_L1_C*
IFPF_L1_C
IFPF_L0_C*
IFPF_L0_C
DP_SIGNALS
C3
47pF
C2
47pF
Close to conn
Fused DP_PWR
3V3
C5548
0.1uF
DP_PWR_EN
R5194
0ohm
PS_DP_PWR_EN_2
C5549
0.1uF
U5004
G5761SSTD8-R
SOT23_5_DP
IN
EN/EN*
GND
OUT
OC*/ISET
DP-SKU
R5195
10k
C5550
0.1uF
C5551
10uF
C9
330uF
C2027
330uF
C2028
470uF
PCB CO-LAYOUT

MICRO-STAR INT'L CO.,LTD

MS-V389

Size	Document Description	Rev
Custom	IFPF DP	1.1
Date: Thursday, July 23, 2020	Sheet 31 of 76	

00205363 RD(C) 20200901 劉巍 MSI CONFIDENTIAL weistang(唐浩健) (20001789) RMA工程課

MISC: ROM, Straps

H=High :Tied to 1.8V
M=Middle:Tied to 0.9V
L=Low :Tied to 0V

GROUP0

STRAP2	STRAP1	STRAP0	RAMCFG[4:0]		
L	L	L	00000	RAMCFG MICRON 8Gb G6X 19Gbps x16 (161-0430-900)	<-A01 PCB
H	L	L	00100	RAMCFG MICRON 8Gb G6X 19Gbps x8 (161-0430-900)	
H	L	H	00101	RAMCFG MICRON 8Gb G6X 21Gbps x8 (161-0431-900)	
L	L	M	01000	RAMCFG MICRON 8Gb G6X 20Gbps x16 (161-0424-900)	
L	L	H	00001	RAMCFG MICRON 8Gb G6X 21Gbps x16 (161-0431-900)	<-OLD
L	M	H	01010	RAMCFG MICRON 8Gb G6X 19Gbps x16 (161-0430-900)	<-LATEST A02 PCB

ROM_SO	ROM_SI	ROM_SCLK	SMARTFAN[2:0],FS_OVERT	1:ENABLE 0:DISABLE	
H	H	H	0111	FS_OVERT ENABLE	DEFAULT
L	L	L	0000	FS_OVERT DISABLE	

1:SMB_ALT_ADDR ENABLE
0:SMB_ALT_ADDR DISABLE

1:DEVID_SEL REBRAND
0:DEVID_SEL ORIGNAL

1:PCIE_CFG LOW POWER
0:PCIE_CFG HIGH POWER

1:VGA_DEVICE ENABLE
0:VGA_DEVICE DISABLE

STRAP5	STRAP4	STRAP3	SMB_ALT_ADDR	DEVID_SEL	PCIE_CFG	VGA_DEVICE	
M	H	H	1	1	1	1	
M	H	L	1	1	1	0	
M	L	H	1	1	0	1	
M	L	L	1	1	0	0	
L	H	M	1	0	1	1	
L	M	H	1	0	1	0	
L	M	L	1	0	0	1	
L	L	M	1	0	0	0	
H	H	H	0	1	1	1	
H	H	L	0	1	1	0	
H	L	H	0	1	0	1	
H	L	L	0	1	0	0	
L	H	H	0	0	1	1	
L	H	L	0	0	1	0	
L	L	H	0	0	0	1	Default
L	L	L	0	0	0	0	

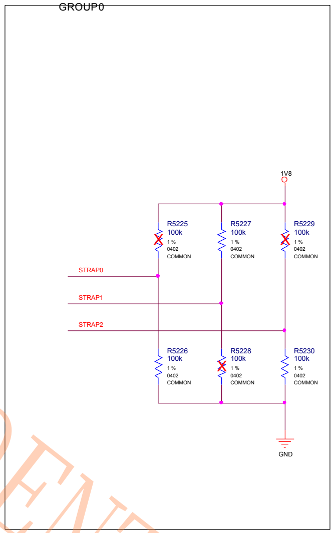
GROUP0
1V8
R5225 100k 1% 0402 COMMON
R5227 100k 1% 0402 COMMON
R5229 100k 1% 0402 COMMON
STRAP0
STRAP1
STRAP2
R5226 100k 1% 0402 COMMON
R5228 100k 1% 0402 COMMON
R5230 100k 1% 0402 COMMON
GND

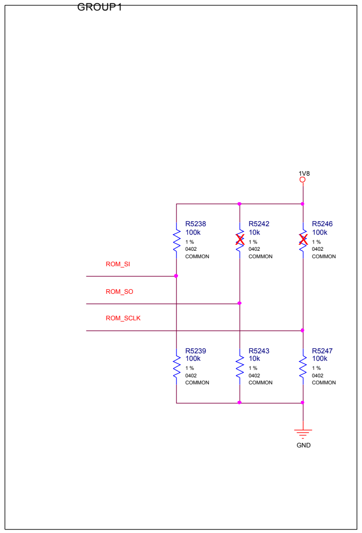
GROUP1
1V8
R5238 100k 1% 0402 COMMON
R5242 10k 1% 0402 COMMON
R5246 100k 1% 0402 COMMON
ROM_SI
ROM_SO
ROM_SCLK
R5239 100k 1% 0402 COMMON
R5243 10k 1% 0402 COMMON
R5247 100k 1% 0402 COMMON
GND

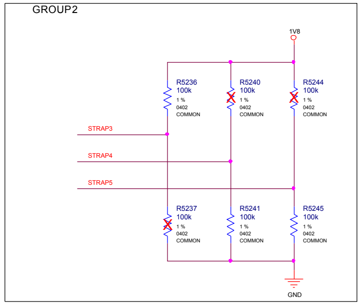
GROUP2
1V8
R5236 100k 1% 0402 COMMON
R5240 100k 1% 0402 COMMON
R5244 100k 1% 0402 COMMON
STRAP3
STRAP4
STRAP5
R5237 100k 1% 0402 COMMON
R5241 100k 1% 0402 COMMON
R5245 100k 1% 0402 COMMON
GND

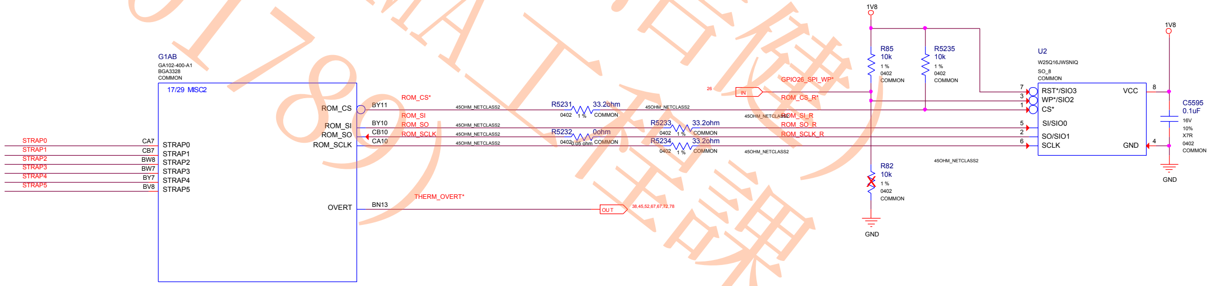
G1AB
GA102-400-A1
BGA3328
COMMON
17/29 MISC2
STRAP0 CA7 STRAP0
STRAP1 CB7 STRAP1
STRAP2 BW8 STRAP2
STRAP3 BW7 STRAP3
STRAP4 BY7 STRAP4
STRAP5 BV8 STRAP5
ROM_CS BY11 ROM_CS*
ROM_SI BY10 ROM_SI
ROM_SO CB10 ROM_SO
ROM_SCLK CA10 ROM_SCLK
OVERT BN13 THERM_OVERT*
OUT 38,45,52,67,67,72,78
45OHM_NETCLASS2
R5231 33.2ohm 0402 1% COMMON
R5232 0ohm 0402 0.05 ohm COMMON
R5233 33.2ohm 0402 1% COMMON
R5234 33.2ohm 0402 1% COMMON
26 IN GPIO26_SPI_WP*
ROM_CS_R*
ROM_SI_R
ROM_SO_R
ROM_SCLK_R
1V8
R85 10k 1% 0402 COMMON
R5235 10k 1% 0402 COMMON
R82 10k 1% 0402 COMMON
GND
U2
W25Q16JWSNIQ
SO_8
COMMON
7 RST*/SIO3
3 WP*/SIO2
1 CS*
5 SI/SIO0
2 SO/SIO1
6 SCLK
8 VCC
4 GND
1V8
C5595 0.1uF 16V 10% X7R 0402 COMMON
GND

MICRO-STAR INT'L CO.,LTD

MS-V389

Size	Document Description	Rev
Custom	MISC: ROM, Straps	1.1

Date: Thursday, July 23, 2020 | Sheet 32 of 76

0020253563 MSI CONFIDENTIAL weistang(唐浩傑) RD(C)20200901(30001789) RMA工程課 劍魏

MISC: XTAL. PLL

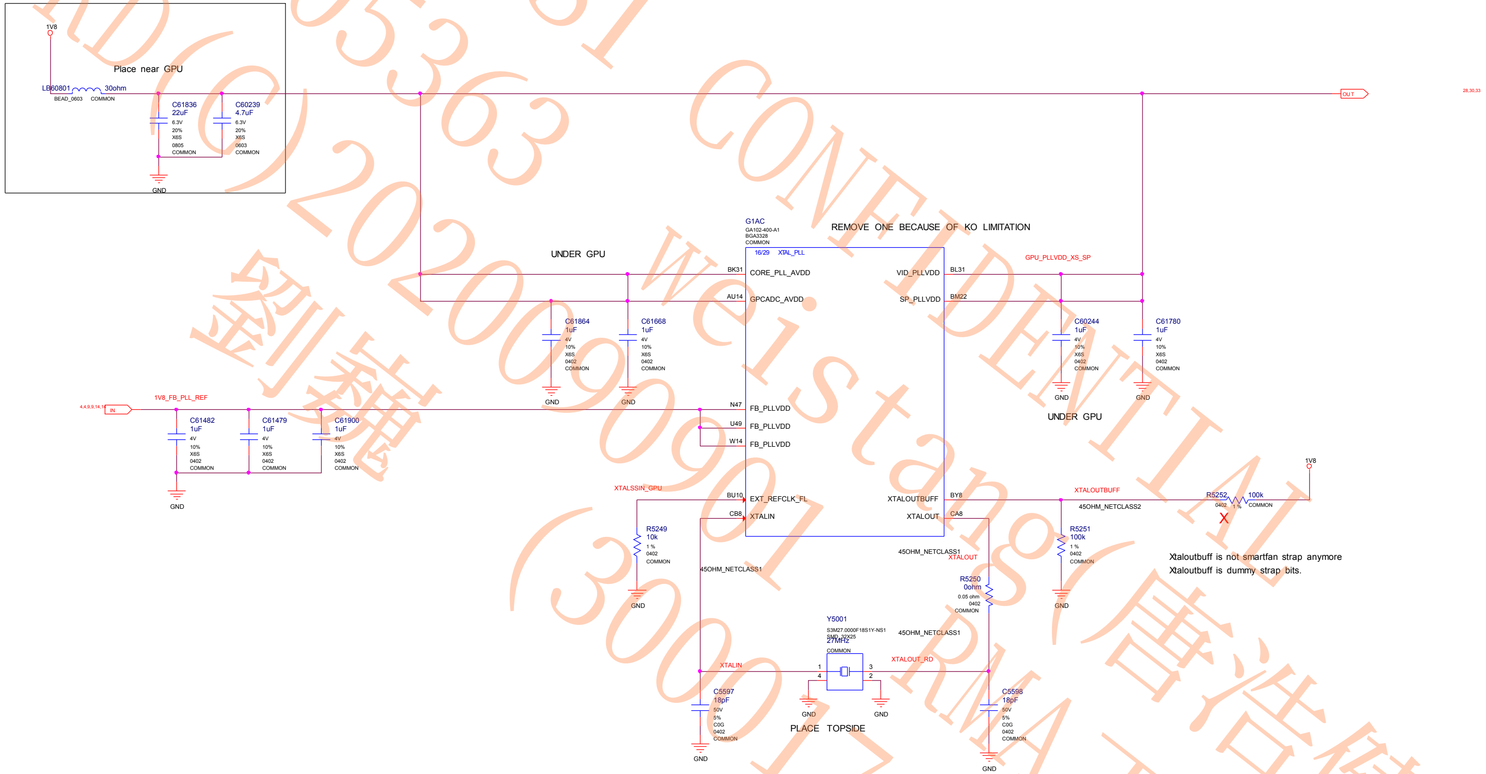
1V8
LB60801
30ohm
BEAD_0603
COMMON
C61836
22uF
6.3V
20%
X6S
0805
COMMON
C60239
4.7uF
6.3V
20%
X6S
0603
COMMON
GND
OUT
28,30,33
G1AC
GA102-400-A1
BGA3328
COMMON
16/29
XTAL_PLL
BK31
CORE_PLL_AVDD
AU14
GPCADC_AVDD
N47
FB_PLLVDD
U49
FB_PLLVDD
W14
FB_PLLVDD
BU10
EXT_REFCLK_FL
CB8
XTALIN
VID_PLLVDD
BL31
SP_PLLVDD
BM22
XTALOUTBUFF
BY8
XTALOUT
CA8
GPU_PLLVDD_XS_SP
C61864
1uF
4V
10%
X6S
0402
COMMON
C61668
1uF
4V
10%
X6S
0402
COMMON
C60244
1uF
4V
10%
X6S
0402
COMMON
C61780
1uF
4V
10%
X6S
0402
COMMON
4,4,9,9,14,14
IN
1V8_FB_PLL_REF
C61482
1uF
4V
10%
X6S
0402
COMMON
C61479
1uF
4V
10%
X6S
0402
COMMON
C61900
1uF
4V
10%
X6S
0402
COMMON
XTALSSIN_GPU
R5249
10k
1 %
0402
COMMON
45OHM_NETCLASS1
XTALOUTBUFF
45OHM_NETCLASS2
R5252
100k
0402
1 %
COMMON
X
1V8
R5251
100k
1 %
0402
COMMON
45OHM_NETCLASS1
XTALOUT
R5250
0ohm
0.05 ohm
0402
COMMON
Y5001
S3M27.0000F18S1Y-NS1
SMD_32X25
27MHz
COMMON
1
4
3
2
XTALIN
XTALOUT_RD
45OHM_NETCLASS1
C5597
18pF
50V
5%
C0G
0402
COMMON
C5598
18pF
50V
5%
C0G
0402
COMMON

Place near GPU

UNDER GPU

REMOVE ONE BECAUSE OF KO LIMITATION

UNDER GPU

Xtaloutbuff is not smartfan strap anymore
Xtaloutbuff is dummy strap bits.

PLACE TOPSIDE

MSI CONFIDENTIAL
00205363
RD(C) 20200901
劉魏
weistang(唐浩健)
(30001789)
RMA工程課

MICRO-STAR INT'L CO.,LTD

MS-V389

Size	Document Description	Rev
Custom	MISC: XTAL. PLL	1.1

Date: Thursday, July 23, 2020
Sheet 33 of 76

PS: 5V, 5V_BACKUP

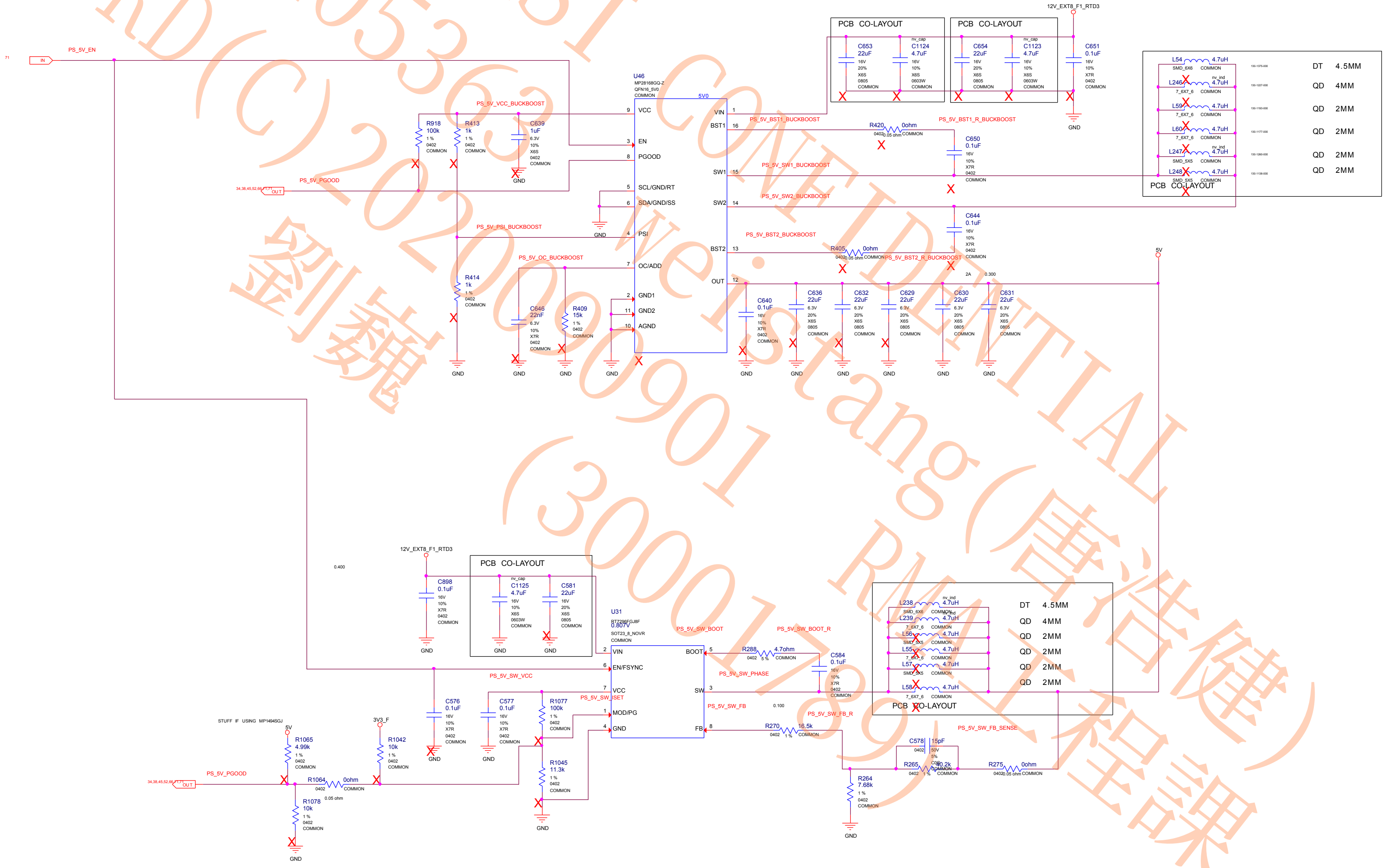

PS_5V_EN
IN
U46
MP28168GQ-Z
QFN16_5V0
COMMON
VCC
EN
PGOOD
SCL/GND/RT
SDA/GND/SS
PSI
OC/ADD
GND1
GND2
AGND
VIN
BST1
SW1
SW2
BST2
OUT
PS_5V_VCC_BUCKBOOST
PS_5V_PGOOD
PS_5V_PSI_BUCKBOOST
PS_5V_OC_BUCKBOOST
PS_5V_BST1_BUCKBOOST
PS_5V_BST1_R_BUCKBOOST
PS_5V_SW1_BUCKBOOST
PS_5V_SW2_BUCKBOOST
PS_5V_BST2_BUCKBOOST
PS_5V_BST2_R_BUCKBOOST
R918 100k
R413 1k
C639 1uF
R414 1k
C646 22nF
R409 15k
R420 0ohm
R405 0ohm
C650 0.1uF
C644 0.1uF
C640 0.1uF
C636 22uF
C632 22uF
C629 22uF
C630 22uF
C631 22uF
PCB CO-LAYOUT
C653 22uF
C1124 4.7uF
C654 22uF
C1123 4.7uF
C651 0.1uF
12V_EXT8_F1_RTD3
L54 4.7uH
L246 4.7uH
L59 4.7uH
L60 4.7uH
L247 4.7uH
L248 4.7uH
DT 4.5MM
QD 4MM
QD 2MM
QD 2MM
QD 2MM
QD 2MM
5V
GND
U31
RT7298FGJ8F
0.807V
SOT23_8_NOVR
VIN
EN/FSYNC
VCC
MOD/PG
GND
BOOT
SW
FB
C898 0.1uF
C1125 4.7uF
C581 22uF
C576 0.1uF
C577 0.1uF
R1077 100k
R1045 11.3k
R1065 4.99k
R1064 0ohm
R1078 10k
R1042 10k
3V3_F
STUFF IF USING MP1494SGJ
PS_5V_SW_VCC
PS_5V_SW_ISET
PS_5V_SW_BOOT
PS_5V_SW_BOOT_R
PS_5V_SW_PHASE
PS_5V_SW_FB
PS_5V_SW_FB_R
PS_5V_SW_FB_SENSE
R288 4.7ohm
C584 0.1uF
R270 16.5k
C578 15pF
R265 30.2k
R275 0ohm
R264 7.68k
L238 4.7uH
L239 4.7uH
L56 4.7uH
L55 4.7uH
L57 4.7uH
L58 4.7uH
DT 4.5MM
QD 4MM
QD 2MM
QD 2MM
QD 2MM
QD 2MM

MSI CONFIDENTIAL
00205363 RD(C)20200901 劉巍
Weistang(唐浩棟)(30001789) RM工程課

MICRO-STAR INT'L CO.,LTD

MS-V389

Size	Document Description	Rev
Custom	PS: 5V, 5V_BACKUP	1.1

Date: Thursday, July 23, 2020 Sheet 34 of 76

PS: PEX_DVDD 1V8 Rail

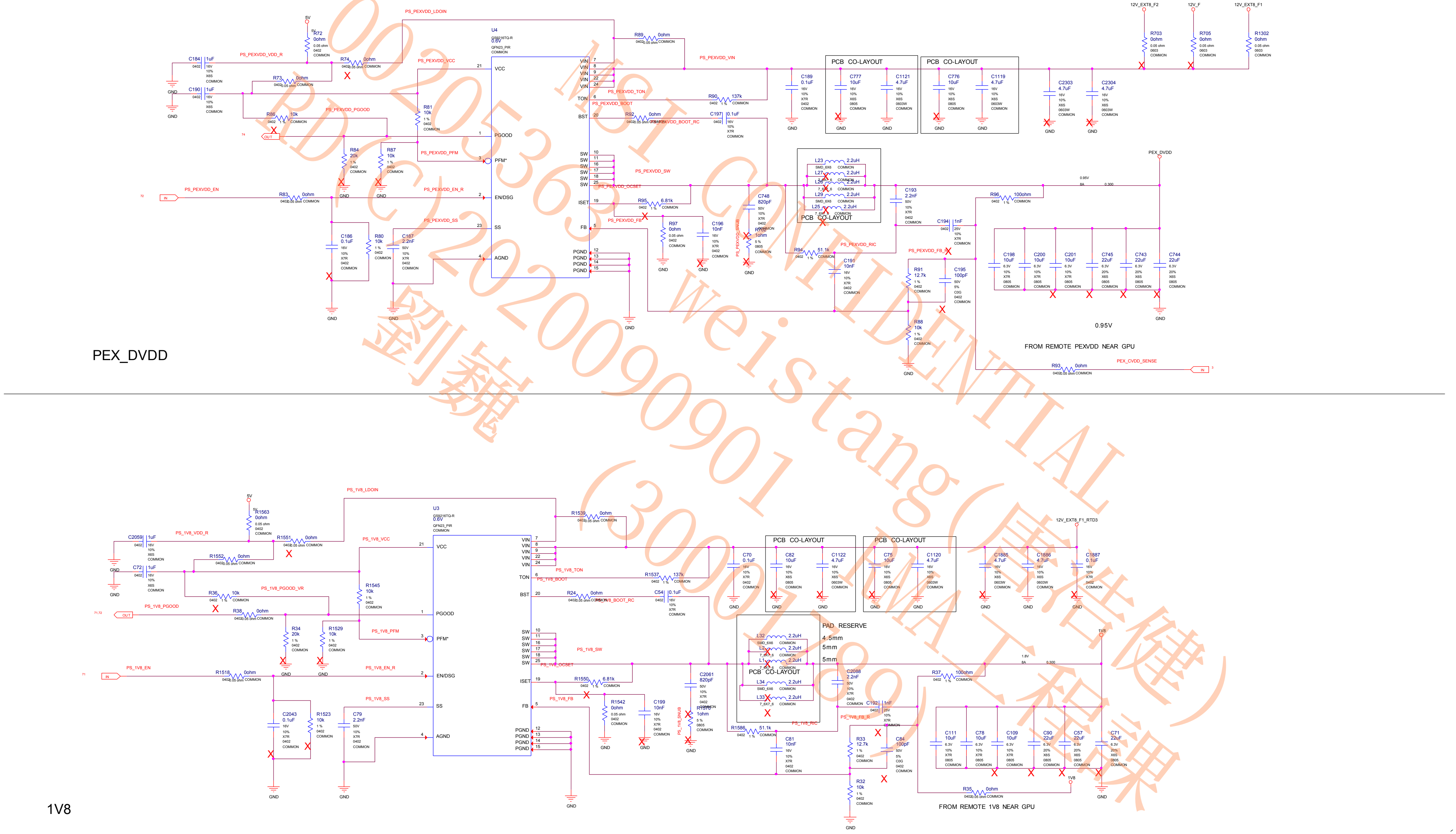
PEX_DVDD
1V8
U4
GS9216TQ-R
0.6V
QFN23_PIR
COMMON
U3
VIN
VCC
TON
BST
PGOOD
PFM*
EN/DSG
SW
ISET
SS
FB
AGND
PGND
PS_PEXVDD_LDOIN
PS_PEXVDD_VDD_R
PS_PEXVDD_VCC
PS_PEXVDD_PGOOD
PS_PEXVDD_PFM
PS_PEXVDD_EN
PS_PEXVDD_EN_R
PS_PEXVDD_SS
PS_PEXVDD_VIN
PS_PEXVDD_TON
PS_PEXVDD_BOOT
PS_PEXVDD_BOOT_RC
PS_PEXVDD_SW
PS_PEXVDD_OCSET
PS_PEXVDD_FB
PS_PEXVDD_RC
PS_PEXVDD_SNUB
PS_PEXVDD_FB_R
PEX_CVDD_SENSE
PEX_DVDD
12V_EXT8_F2
12V_F
12V_EXT8_F1
12V_EXT8_F1_RTD3
5V
PCB CO-LAYOUT
PAD RESERVE
4.5mm
5mm
5mm
0.95V
8A
0.300
1.8V
FROM REMOTE PEXVDD NEAR GPU
FROM REMOTE 1V8 NEAR GPU
PS_1V8_LDOIN
PS_1V8_VDD_R
PS_1V8_VCC
PS_1V8_PGOOD_VR
PS_1V8_PGOOD
PS_1V8_PFM
PS_1V8_EN
PS_1V8_EN_R
PS_1V8_SS
PS_1V8_TON
PS_1V8_BOOT
PS_1V8_BOOT_RC
PS_1V8_SW
PS_1V8_OCSET
PS_1V8_FB
PS_1V8_SNUB
PS_1V8_RC
PS_1V8_FB_R
GND
IN
OUT
L23 2.2uH
L27 2.2uH
L26 2.2uH
L29 2.2uH
L25 2.2uH
L32 2.2uH
L2 2.2uH
L1 2.2uH
L34 2.2uH
L33 2.2uH

00205363 RD(C) 20200901 劉巍
MSI CONFIDENTIAL weistang(唐維捷) (30001769 AI工程課)

MICRO-STAR INT'L CO.,LTD

MS-V389

Size	Document Description	Rev
Custom	PS: PEX_DVDD 1V8 Rail	1.1

Date: Thursday, July 23, 2020 Sheet 35 of 76

BLANK

MSI CONFIDENTIAL
00205363 weistang(唐浩健)
RD(C)20200901 RMA工程課
劉[illegible] (30001789)

PS: FBVDD Controller OVR3

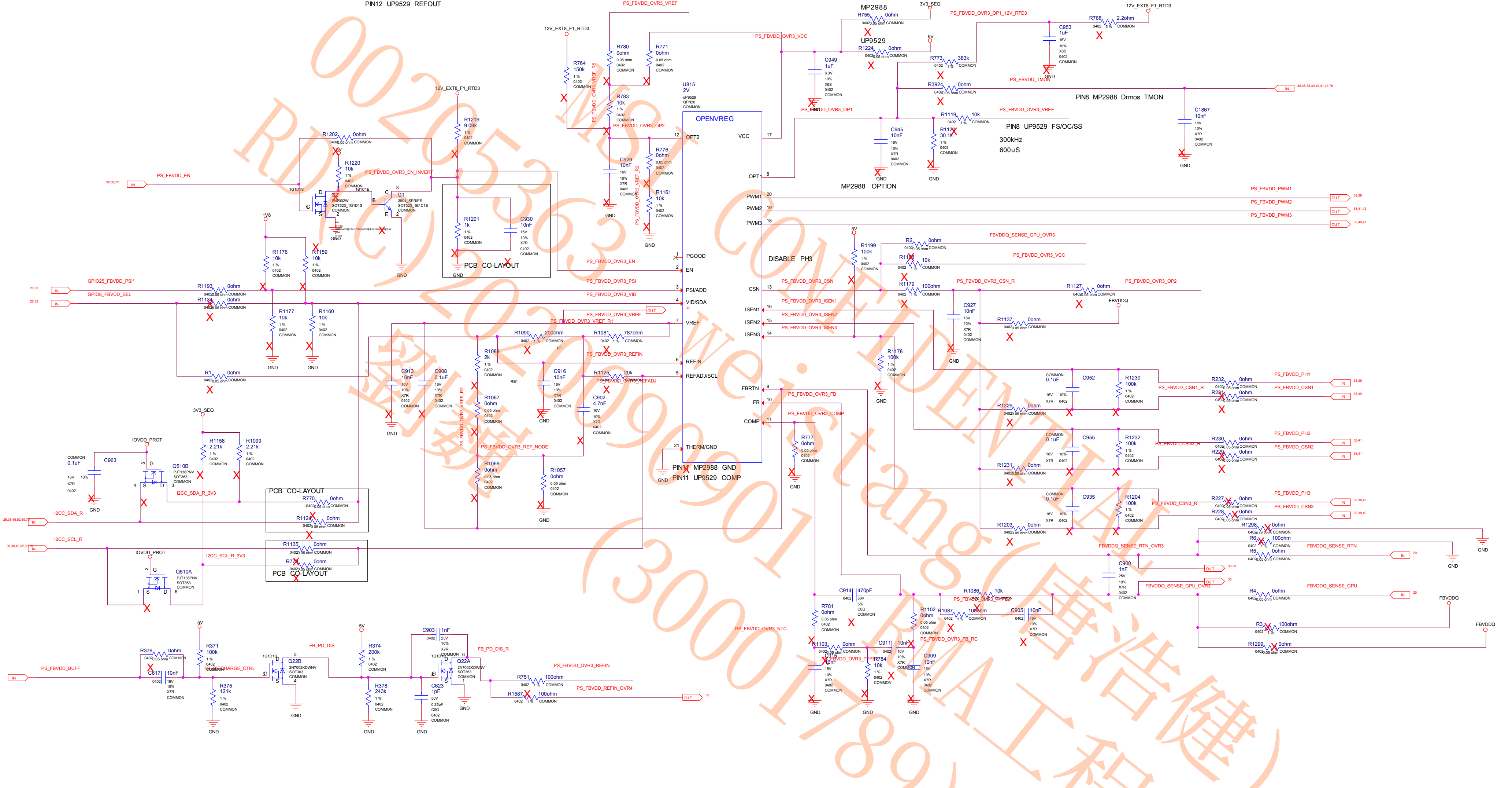
PIN12 MP2988 VIN SENSE 1/16 DIVIDER
PIN12 UP9529 REFOUT
PS_FBVDD_OVR3_VREF
12V_EXT8_F1_RTD3
3V3_SEQ
MP2988
UP9529
PS_FBVDD_OVR3_OP1_12V_RTD3
PS_FBVDD_OVR3_VCC
U815
OPENVREG
OPT2
VCC
OPT1
PWM1
PWM2
PWM3
PGOOD
EN
PSI/ADD
VID/SDA
VREF
REFIN
REFADJ/SCL
THERM/GND
CSN
ISEN1
ISEN2
ISEN3
FBRTN
FB
COMP
DISABLE PH3
PIN8 MP2988 Drmos TMON
PIN8 UP9529 FS/OC/SS
300kHz
600uS
MP2988 OPTION
PIN11 MP2988 GND
PIN11 UP9529 COMP
PS_FBVDD_EN
PS_FBVDD_OVR3_EN_INVERT
PCB CO-LAYOUT
GPIO25_FBVDD_PSI*
GPIO8_FBVDD_SEL
PS_FBVDD_OVR3_EN
PS_FBVDD_OVR3_PSI
PS_FBVDD_OVR3_VID
PS_FBVDD_OVR3_VREF_R1
PS_FBVDD_OVR3_REFIN
PS_FBVDD_OVR3_REFADJ
PS_FBVDD_OVR3_REF_NODE
PS_FBVDD_PWM1
PS_FBVDD_PWM2
PS_FBVDD_PWM3
FBVDDQ_SENSE_GPU_OVR3
PS_FBVDD_OVR3_CSN
PS_FBVDD_OVR3_CSN_R
PS_FBVDD_OVR3_ISEN1
PS_FBVDD_OVR3_ISEN2
PS_FBVDD_OVR3_ISEN3
PS_FBVDD_OVR3_OP2
PS_FBVDD_OVR3_FB
PS_FBVDD_OVR3_COMP
PS_FBVDD_PH1
PS_FBVDD_CSN1
PS_FBVDD_PH2
PS_FBVDD_CSN2
PS_FBVDD_PH3
PS_FBVDD_CSN3
FBVDDQ_SENSE_RTN_OVR3
FBVDDQ_SENSE_RTN
FBVDDQ_SENSE_GPU
FBVDDQ
PS_FBVDD_OVR3_NTC
PS_FBVDD_OVR3_FB_RC
PS_FBVDD_TMON
IOVDD_PROT
I2CC_SDA_R
I2CC_SCL_R
I2CC_SDA_R_3V3
I2CC_SCL_R_3V3
Q510B
Q510A
PJT138PNV
Q1
Q2
PS_FBVDD_BUFF
FB_PD_DIS
FB_PD_DIS_R
FB_DISCHARGE_CTRL
Q22B
Q22A
2N7002KDWNV
PS_FBVDD_OVR3_REFIN
PS_FBVDD_REFIN_OVR4
1V8
5V
GND

FOR DT SKU

00205363 RD(C) 20200901 weistang(唐浩偉)(30001789) MSI CONFIDENTIAL RMA工程課

MICRO-STAR INT'L CO.,LTD
MS-V389

Size	Document Description	Rev
Custom	PS: FBVDD Controller OVR3	1.1

Date: Thursday, July 23, 2020 Sheet 37 of 76

PS:FBVDDQ OVR4

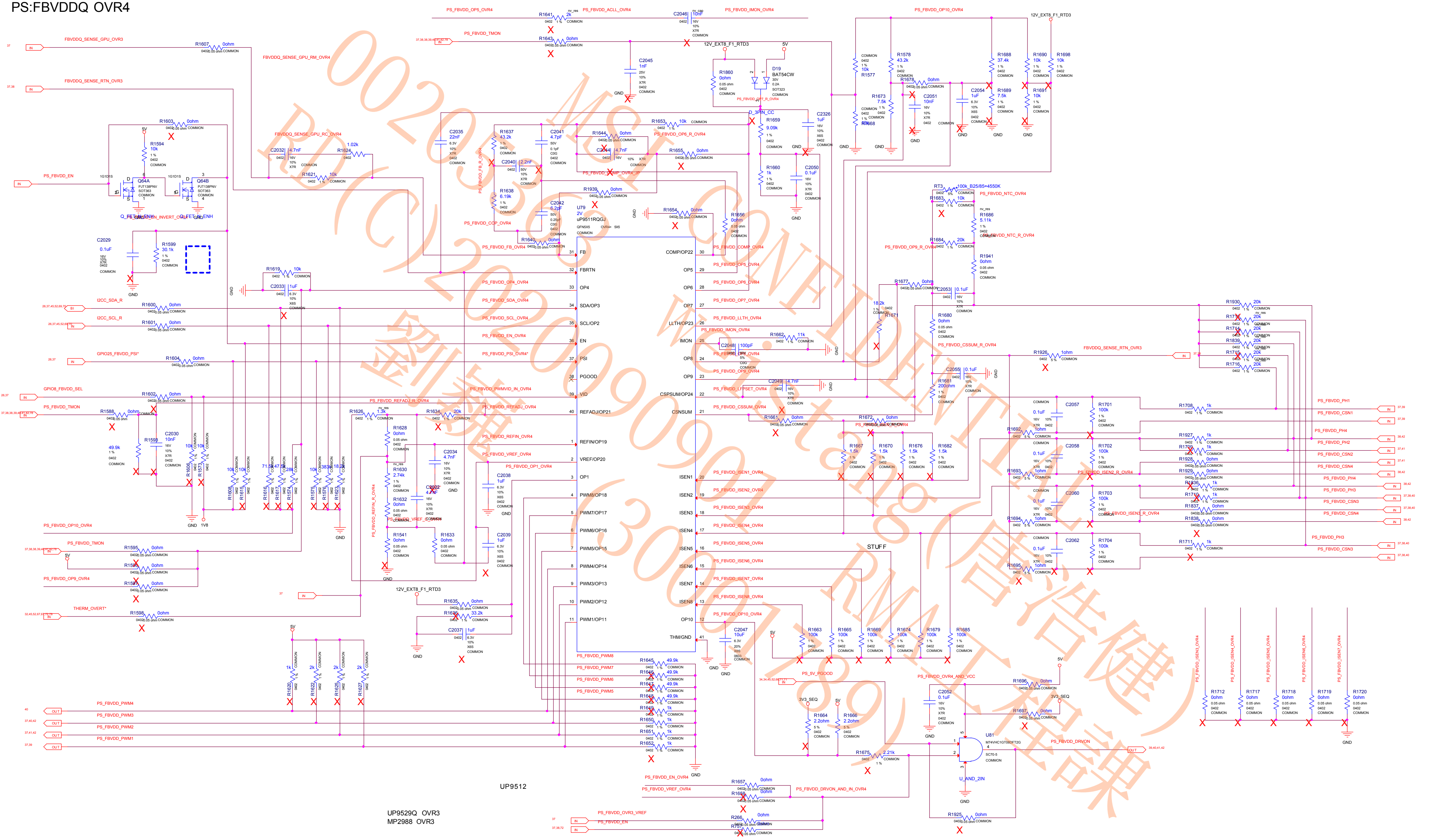

U79
uP9511RQGJ
QFN5X5
FB
FBRTN
OP4
SDA/OP3
SCL/OP2
EN
PSI
PGOOD
VID
REFADJ/OP21
REFIN/OP19
VREF/OP20
OP1
PWM8/OP18
PWM7/OP17
PWM6/OP16
PWM5/OP15
PWM4/OP14
PWM3/OP13
PWM2/OP12
PWM1/OP11
COMP/OP22
OP5
OP6
OP7
LLTH/OP23
IMON
OP8
OP9
CSPSUM/OP24
CSNSUM
ISEN1
ISEN2
ISEN3
ISEN4
ISEN5
ISEN6
ISEN7
ISEN8
OP10
THM/GND
FBVDDQ_SENSE_GPU_OVR3
FBVDDQ_SENSE_RTN_OVR3
FBVDDQ_SENSE_GPU_RM_OVR4
FBVDDQ_SENSE_GPU_RC_OVR4
PS_FBVDD_EN
PS_FBVDD_TMON
PS_FBVDD_OP5_OVR4
PS_FBVDD_ACLL_OVR4
PS_FBVDD_IMON_OVR4
PS_FBVDD_OP10_OVR4
PS_FBVDD_OP9_OVR4
PS_FBVDD_NTC_OVR4
PS_FBVDD_CSSUM_R_OVR4
PS_FBVDD_COP_OVR4
PS_FBVDD_FB_OVR4
PS_FBVDD_OP4_OVR4
PS_FBVDD_SDA_OVR4
PS_FBVDD_SCL_OVR4
PS_FBVDD_EN_OVR4
PS_FBVDD_PSI_OVR4
PS_FBVDD_PWMVID_IN_OVR4
PS_FBVDD_REFADJ_R_OVR4
PS_FBVDD_REFIN_OVR4
PS_FBVDD_VREF_OVR4
PS_FBVDD_OP1_OVR4
PS_FBVDD_PWM1
PS_FBVDD_PWM2
PS_FBVDD_PWM3
PS_FBVDD_PWM4
PS_FBVDD_PWM5
PS_FBVDD_PWM6
PS_FBVDD_PWM7
PS_FBVDD_PWM8
PS_FBVDD_PH1
PS_FBVDD_PH2
PS_FBVDD_PH3
PS_FBVDD_PH4
PS_FBVDD_CSN1
PS_FBVDD_CSN2
PS_FBVDD_CSN3
PS_FBVDD_CSN4
PS_FBVDD_DRVON
PS_FBVDD_OVR4_AND_VCC
PS_FBVDD_DRVON_AND_IN_OVR4
PS_FBVDD_VREF_OVR4
PS_FBVDD_OVR3_VREF
PS_5V_PGOOD
THERM_OVERT*
GPIO25_FBVDD_PSI*
GPIO8_FBVDD_SEL
I2CC_SDA_R
I2CC_SCL_R
12V_EXT8_F1_RTD3
5V
3V3_SEQ
GND
Q64A
Q64B
PJT138PNV
SOT363
D19
BAT54CW
U81
M74VHC1G08DFT2G
SC70-5
U_AND_2IN
STUFF
UP9512
UP9529Q OVR3
MP2988 OVR3

MICRO-STAR INT'L CO.,LTD

MS-V389

Size	Document Description	Rev
Custom	PS:FBVDDQ OVR4	1.1

Date: Thursday, July 23, 2020 Sheet 38 of 76

00205368 MSI CONFIDENTIAL

PS: FBVDD PH1

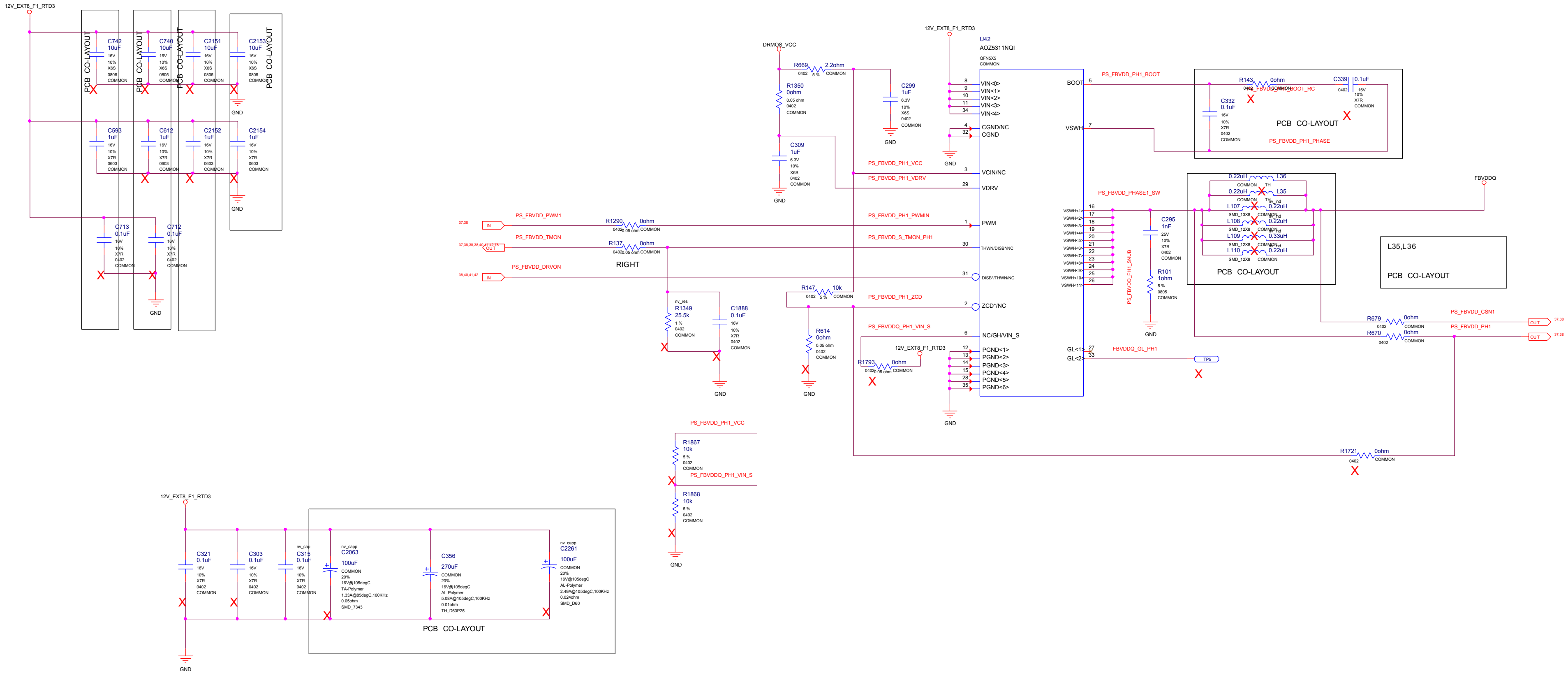
12V_EXT8_F1_RTD3
PCB CO-LAYOUT
C742 10uF 16V 10% X6S 0805 COMMON
C740 10uF 16V 10% X6S 0805 COMMON
C2151 10uF 16V 10% X6S 0805 COMMON
C2153 10uF 16V 10% X6S 0805 COMMON
C593 1uF 16V 10% X7R 0603 COMMON
C612 1uF 16V 10% X7R 0603 COMMON
C2152 1uF 16V 10% X7R 0603 COMMON
C2154 1uF 16V 10% X7R 0603 COMMON
C713 0.1uF 16V 10% X7R 0402 COMMON
C712 0.1uF 16V 10% X7R 0402 COMMON
GND
DRMOS_VCC
R669 2.2ohm 0402 5 % COMMON
R1350 0ohm 0.05 ohm 0402 COMMON
C299 1uF 6.3V 10% X6S 0402 COMMON
C309 1uF 6.3V 10% X6S 0402 COMMON
U42
AOZ5311NQI
QFN5X5
COMMON
VIN<0> VIN<1> VIN<2> VIN<3> VIN<4>
8 9 10 11 34
CGND/NC 4
CGND 32
VCIN/NC 3
VDRV 29
PWM 1
THWN/DISB*/NC 30
DISB*/THWN/NC 31
ZCD*/NC 2
NC/GH/VIN_S 6
PGND<1> 12
PGND<2> 13
PGND<3> 14
PGND<4> 15
PGND<5> 28
PGND<6> 35
BOOT 5
VSWH 7
VSWH<1> … VSWH<11>
16 17 18 19 20 21 22 23 24 25 26
GL<1> 27
GL<2> 33
PS_FBVDD_PH1_VCC
PS_FBVDD_PH1_VDRV
PS_FBVDD_PH1_PWMIN
PS_FBVDD_S_TMON_PH1
PS_FBVDD_PH1_ZCD
PS_FBVDDQ_PH1_VIN_S
37,38
IN
PS_FBVDD_PWM1
R1290 0ohm 0402 0.05 ohm COMMON
37,38,38,38,40,41,42,78
OUT
PS_FBVDD_TMON
R137 0ohm 0402 0.05 ohm COMMON
RIGHT
38,40,41,42
IN
PS_FBVDD_DRVON
nv_res
R1349 25.5k 1 % 0402 COMMON
C1888 0.1uF 16V 10% X7R 0402 COMMON
R147 10k 0402 5 % COMMON
R614 0ohm 0.05 ohm 0402 COMMON
R1793 0ohm 0402 0.05 ohm COMMON
PS_FBVDD_PH1_BOOT
R143 0ohm 0402 COMMON
PS_FBVDD_PH1_BOOT_RC
C339 0.1uF 0402 16V 10% X7R COMMON
C332 0.1uF 16V 10% X7R 0402 COMMON
PS_FBVDD_PH1_PHASE
PS_FBVDD_PHASE1_SW
PS_FBVDD_PH1_SNUB
C295 1nF 25V 10% X7R 0402 COMMON
R101 1ohm 5 % 0805 COMMON
0.22uH L36 COMMON TH
0.22uH L35 COMMON TH
nv_ind L107 0.22uH SMD_13X8 COMMON
nv_ind L108 0.22uH SMD_12X8 COMMON
nv_ind L109 0.33uH SMD_12X8 COMMON
nv_ind L110 0.22uH SMD_12X8 COMMON
FBVDDQ
L35,L36
R679 0ohm 0402 COMMON
PS_FBVDD_CSN1
R670 0ohm 0402 COMMON
PS_FBVDD_PH1
OUT 37,38
FBVDDQ_GL_PH1
TP5
R1721 0ohm 0402 COMMON
R1867 10k 5 % 0402 COMMON
R1868 10k 5 % 0402 COMMON
C321 0.1uF 16V 10% X7R 0402 COMMON
C303 0.1uF 16V 10% X7R 0402 COMMON
nv_cap C315 0.1uF 16V 10% X7R 0402 COMMON
nv_capp C2063 100uF COMMON 20% 16V@105degC TA-Polymer 1.33A@85degC,100KHz 0.05ohm SMD_7343
C356 270uF COMMON 20% 16V@105degC AL-Polymer 5.08A@105degC,100KHz 0.01ohm TH_D63P25
nv_capp C2261 100uF COMMON 20% 16V@105degC AL-Polymer 2.49A@105degC,100KHz 0.024ohm SMD_D60

MICRO-STAR INT'L CO.,LTD

MS-V389

Size: Custom

Document Description: PS: FBVDD PH1

Rev 1.1

Date: Thursday, July 23, 2020

Sheet 39 of 76

PS: FBVDD PH3

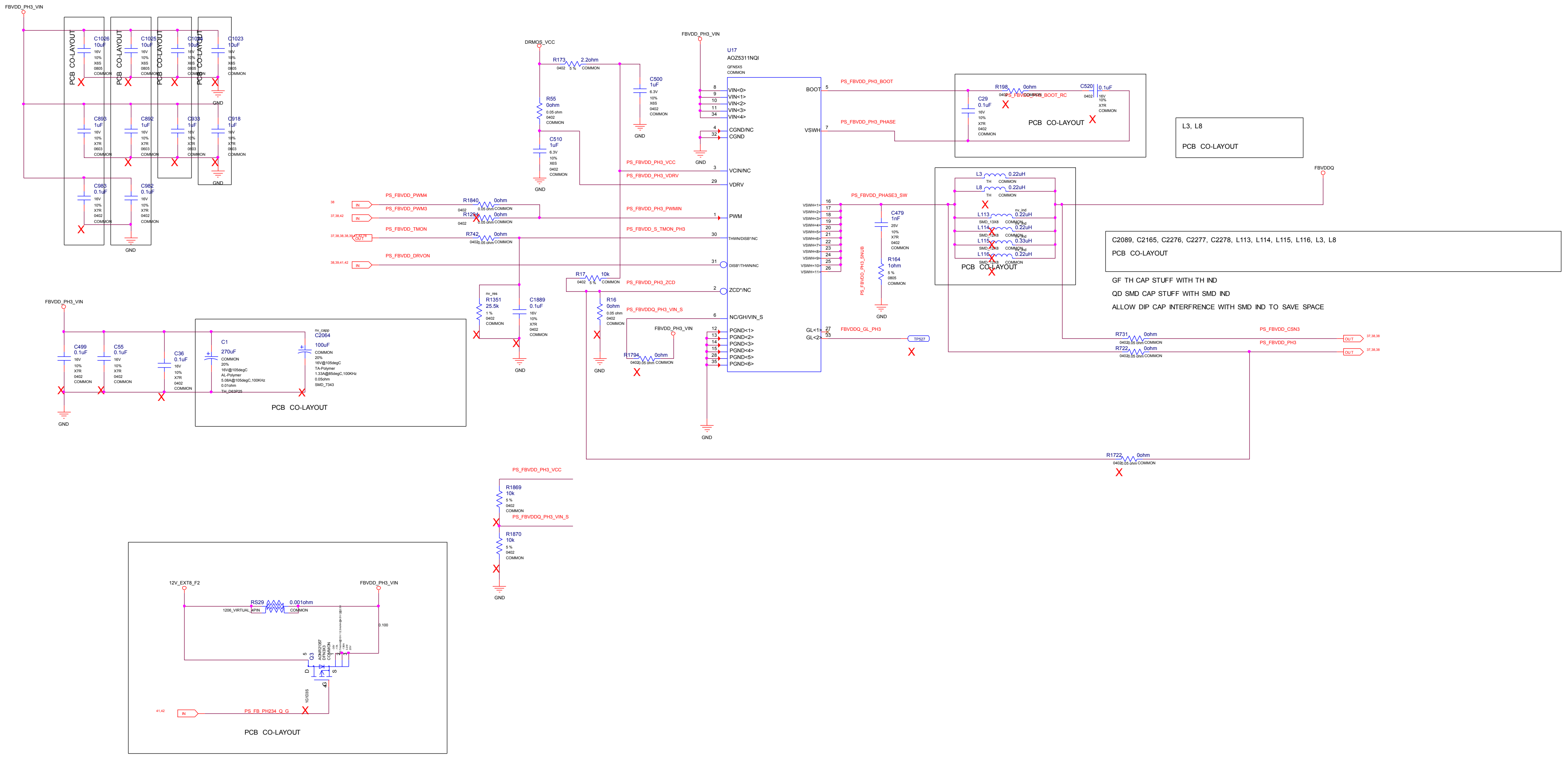
FBVDD_PH3_VIN
PCB CO-LAYOUT
C1026 10uF 16V 10% X6S 0805 COMMON
C1025 10uF 16V 10% X6S 0805 COMMON
C1024 10uF 16V 10% X6S 0805 COMMON
C1023 10uF 16V 10% X6S 0805 COMMON
C893 1uF 16V 10% X7R 0603 COMMON
C892 1uF 16V 10% X7R 0603 COMMON
C933 1uF 16V 10% X7R 0603 COMMON
C918 1uF 16V 10% X7R 0603 COMMON
C983 0.1uF 16V 10% X7R 0402 COMMON
C982 0.1uF 16V 10% X7R 0402 COMMON
GND
DRMOS_VCC
R173 2.2ohm 0402 5 % COMMON
C500 1uF 6.3V 10% X6S 0402 COMMON
R55 0ohm 0.05 ohm 0402 COMMON
C510 1uF 6.3V 10% X6S 0402 COMMON
U17 AOZ5311NQI QFN5X5 COMMON
VIN<0> VIN<1> VIN<2> VIN<3> VIN<4>
8 9 10 11 34
CGND/NC CGND 4 32
VCIN/NC 3
VDRV 29
PWM 1
THWN/DISB*/NC 30
DISB*/THWN/NC 31
ZCD*/NC 2
NC/GH/VIN_S 6
PGND<1> PGND<2> PGND<3> PGND<4> PGND<5> PGND<6>
12 13 14 15 28 35
BOOT 5
VSWH 7
VSWH<1> VSWH<2> VSWH<3> VSWH<4> VSWH<5> VSWH<6> VSWH<7> VSWH<8> VSWH<9> VSWH<10> VSWH<11>
16 17 18 19 20 21 22 23 24 25 26
GL<1> 27
GL<2> 33
PS_FBVDD_PH3_VCC
PS_FBVDD_PH3_VDRV
PS_FBVDD_PH3_PWMIN
PS_FBVDD_S_TMON_PH3
PS_FBVDD_PH3_ZCD
PS_FBVDDQ_PH3_VIN_S
PS_FBVDD_PH3_BOOT
PS_FBVDD_PH3_PHASE
PS_FBVDD_PHASE3_SW
PS_FBVDD_PH3_SNUB
FBVDDQ_GL_PH3
TP527
38 IN PS_FBVDD_PWM4
37,38,42 IN PS_FBVDD_PWM3
37,38,38,38,39,41,42,78 OUT PS_FBVDD_TMON
38,39,41,42 IN PS_FBVDD_DRVON
R1840 0ohm 0402 0.05 ohm COMMON
R1294 0ohm 0402 0.05 ohm COMMON
R742 0ohm 0402 0.05 ohm COMMON
nv_res R1351 25.5k 1 % 0402 COMMON
C1889 0.1uF 16V 10% X7R 0402 COMMON
R17 10k 0402 5 % COMMON
R16 0ohm 0.05 ohm 0402 COMMON
FBVDD_PH3_VIN
R1794 0ohm 0402 0.05 ohm COMMON
R198 0ohm 0402 COMMON
PS_FBVDD_PH3_BOOT_RC
C29 0.1uF 16V 10% X7R 0402 COMMON
C520 0.1uF 0402 16V 10% X7R COMMON
PCB CO-LAYOUT
L3, L8
PCB CO-LAYOUT
C479 1nF 25V 10% X7R 0402 COMMON
R164 1ohm 5 % 0805 COMMON
L3 0.22uH TH COMMON
L8 0.22uH TH COMMON
nv_ind L113 0.22uH SMD_13X8 COMMON
nv_ind L114 0.22uH SMD_12X8 COMMON
nv_ind L115 0.33uH SMD_12X8 COMMON
nv_ind L116 0.22uH SMD_12X8 COMMON
PCB CO-LAYOUT
FBVDDQ
R731 0ohm 0402 0.05 ohm COMMON
R722 0ohm 0402 0.05 ohm COMMON
PS_FBVDD_CSN3 OUT 37,38,38
PS_FBVDD_PH3 OUT 37,38,38
R1722 0ohm 0402 0.05 ohm COMMON
C499 0.1uF 16V 10% X7R 0402 COMMON
C55 0.1uF 16V 10% X7R 0402 COMMON
C36 0.1uF 16V 10% X7R 0402 COMMON
C1 270uF COMMON 20% 16V@105degC AL-Polymer 5.08A@105degC,100KHz 0.01ohm TH_D63P25
nv_capp C2064 100uF COMMON 20% 16V@105degC TA-Polymer 1.33A@85degC,100KHz 0.05ohm SMD_7343
PCB CO-LAYOUT
PS_FBVDD_PH3_VCC
R1869 10k 5 % 0402 COMMON
PS_FBVDDQ_PH3_VIN_S
R1870 10k 5 % 0402 COMMON
12V_EXT8_F2
FBVDD_PH3_VIN
RS29 0.001ohm 1206_VIRTUAL_4PIN COMMON
0.100
Q3 AONR21357 DFN3X3 COMMON
D S G 5 1 2 3 4
1G1D3S
41,42 IN PS_FB_PH234_Q_G
PCB CO-LAYOUT

C2089, C2165, C2276, C2277, C2278, L113, L114, L115, L116, L3, L8

PCB CO-LAYOUT

GF TH CAP STUFF WITH TH IND

QD SMD CAP STUFF WITH SMD IND

ALLOW DIP CAP INTERFRENCE WITH SMD IND TO SAVE SPACE

FBVDD PH3 INPUT ANTI-BACKDRIVE

MSI	**MICRO-STAR INT'L CO.,LTD**	
	MS-V389	
Size Custom	Document Description PS: FBVDD PH3	Rev 1.1
Date: Thursday, July 23, 2020	Sheet 40 of 76	

PS: FBVDD PH2

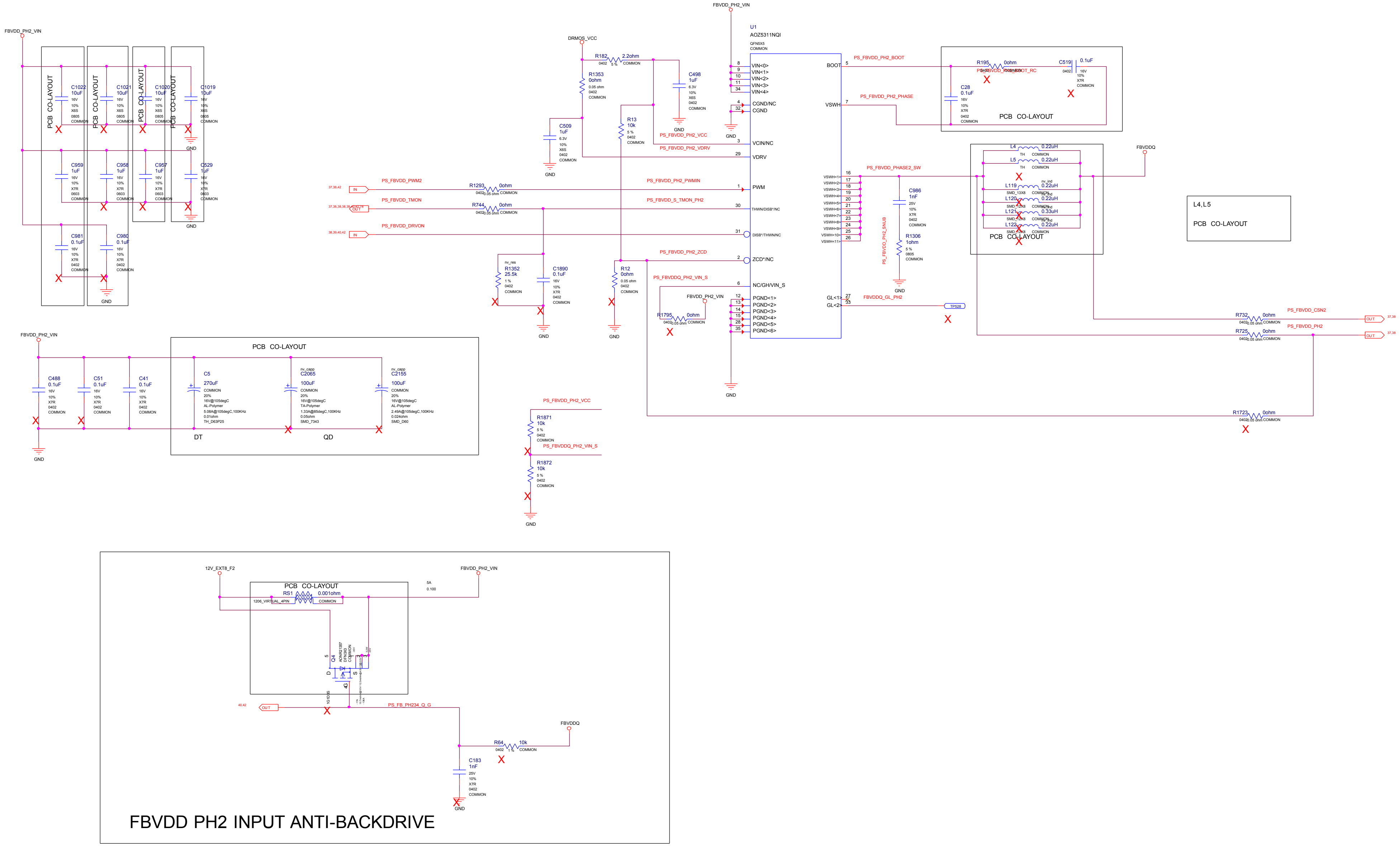
FBVDD_PH2_VIN
PCB CO-LAYOUT
C1022 10uF 16V 10% X6S 0805 COMMON
C1021 10uF 16V 10% X6S 0805 COMMON
C1020 10uF 16V 10% X6S 0805 COMMON
C1019 10uF 16V 10% X6S 0805 COMMON
C959 1uF 16V 10% X7R 0603 COMMON
C958 1uF 16V 10% X7R 0603 COMMON
C957 1uF 16V 10% X7R 0603 COMMON
C529 1uF 16V 10% X7R 0603 COMMON
C981 0.1uF 16V 10% X7R 0402 COMMON
C980 0.1uF 16V 10% X7R 0402 COMMON
GND
C488 0.1uF 16V 10% X7R 0402 COMMON
C51 0.1uF 16V 10% X7R 0402 COMMON
C41 0.1uF 16V 10% X7R 0402 COMMON
C5 270uF COMMON 20% 16V@105degC AL-Polymer 5.08A@105degC,100KHz 0.01ohm TH_D63P25
nv_capp C2065 100uF COMMON 20% 16V@105degC TA-Polymer 1.33A@85degC,100KHz 0.05ohm SMD_7343
nv_capp C2155 100uF COMMON 20% 16V@105degC AL-Polymer 2.49A@105degC,100KHz 0.024ohm SMD_D60
DT
QD
37,38,42 IN PS_FBVDD_PWM2
37,38,38,38,39,40,42,78 OUT PS_FBVDD_TMON
38,39,40,42 IN PS_FBVDD_DRVON
R1293 0ohm 0402 0.05 ohm COMMON
R744 0ohm 0402 0.05 ohm COMMON
nv_res R1352 25.5k 1% 0402 COMMON
C1890 0.1uF 16V 10% X7R 0402 COMMON
DRMOS_VCC
R182 2.2ohm 0402 5% COMMON
R1353 0ohm 0.05 ohm 0402 COMMON
C509 1uF 6.3V 10% X6S 0402 COMMON
C498 1uF 6.3V 10% X6S 0402 COMMON
R13 10k 5% 0402 COMMON
R12 0ohm 0.05 ohm 0402 COMMON
PS_FBVDD_PH2_VCC
PS_FBVDD_PH2_VDRV
PS_FBVDD_PH2_PWMIN
PS_FBVDD_S_TMON_PH2
PS_FBVDD_PH2_ZCD
PS_FBVDDQ_PH2_VIN_S
R1795 0ohm 0402 0.05 ohm COMMON
U1 AOZ5311NQI QFN5X5 COMMON
VIN<0> VIN<1> VIN<2> VIN<3> VIN<4>
CGND/NC CGND
VCIN/NC
VDRV
PWM
THWN/DISB*/NC
DISB*/THWN/NC
ZCD*/NC
NC/GH/VIN_S
PGND<1> PGND<2> PGND<3> PGND<4> PGND<5> PGND<6>
BOOT
VSWH
VSWH<1> … VSWH<11>
GL<1> GL<2>
PS_FBVDD_PH2_BOOT
PS_FBVDD_PH2_PHASE
PS_FBVDD_PH2_BOOT_RC
R195 0ohm 0402 COMMON
C519 0.1uF 0402 16V 10% X7R COMMON
C28 0.1uF 16V 10% X7R 0402 COMMON
PS_FBVDD_PHASE2_SW
C986 1nF 25V 10% X7R 0402 COMMON
PS_FBVDD_PH2_SNUB
R1306 1ohm 5% 0805 COMMON
FBVDDQ_GL_PH2
TP528
L4 0.22uH TH COMMON
L5 0.22uH TH COMMON
nv_ind L119 0.22uH SMD_13X8 COMMON
nv_ind L120 0.22uH SMD_12X8 COMMON
nv_ind L121 0.33uH SMD_12X8 COMMON
nv_ind L122 0.22uH SMD_12X8 COMMON
FBVDDQ
L4,L5 PCB CO-LAYOUT
R732 0ohm 0402 0.05 ohm COMMON PS_FBVDD_CSN2 OUT 37,38
R725 0ohm 0402 0.05 ohm COMMON PS_FBVDD_PH2 OUT 37,38
R1723 0ohm 0402 0.05 ohm COMMON
R1871 10k 5% 0402 COMMON
R1872 10k 5% 0402 COMMON
12V_EXT8_F2
RS1 0.001ohm 1206_VIRTUAL_4PIN COMMON
5A 0.100
Q4 AONR21357 DFN3X3 COMMON
D S G
40,42 OUT PS_FB_PH234_Q_G
R64 10k 0402 1% COMMON
C183 1nF 25V 10% X7R 0402 COMMON
FBVDD PH2 INPUT ANTI-BACKDRIVE

MICRO-STAR INT'L CO.,LTD

MS-V389

Size	Document Description	Rev
Custom	PS: FBVDD PH2	1.1

Date: Thursday, July 23, 2020 Sheet 41 of 76

PS: FBVDD PH4

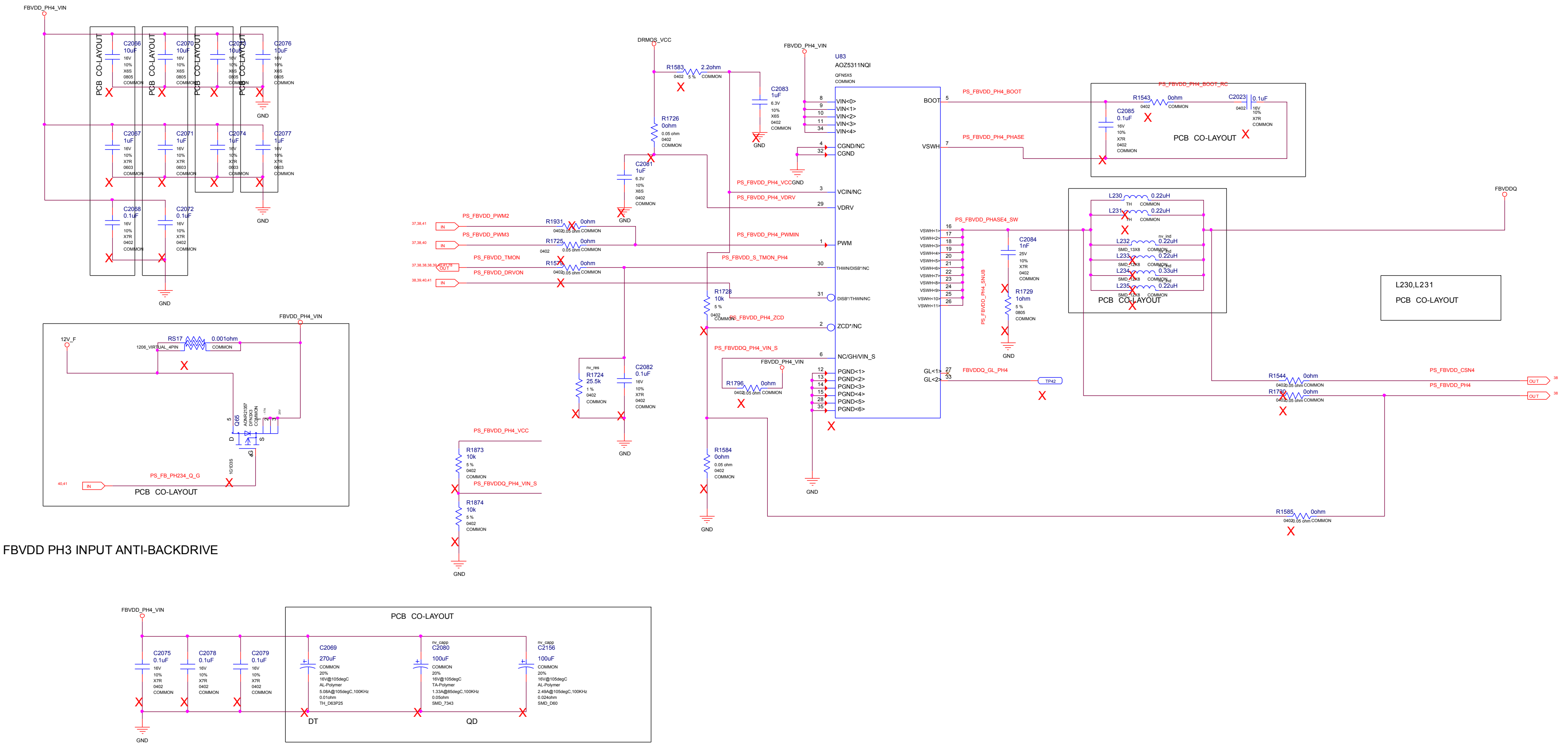
FBVDD_PH4_VIN
PCB CO-LAYOUT
C2066 10uF 16V 10% X6S 0805 COMMON
C2070 10uF 16V 10% X6S 0805 COMMON
C2073 10uF 16V 10% X6S 0805 COMMON
C2076 10uF 16V 10% X6S 0805 COMMON
C2067 1uF 16V 10% X7R 0603 COMMON
C2071 1uF 16V 10% X7R 0603 COMMON
C2074 1uF 16V 10% X7R 0603 COMMON
C2077 1uF 16V 10% X7R 0603 COMMON
C2068 0.1uF 16V 10% X7R 0402 COMMON
C2072 0.1uF 16V 10% X7R 0402 COMMON
GND
DRMOS_VCC
R1583 2.2ohm 0402 5 % COMMON
C2083 1uF 6.3V 10% X6S 0402 COMMON
R1726 0ohm 0.05 ohm 0402 COMMON
C2081 1uF 6.3V 10% X6S 0402 COMMON
U83
AOZ5311NQI
QFN5X5
COMMON
VIN<0> VIN<1> VIN<2> VIN<3> VIN<4>
CGND/NC
CGND
VCIN/NC
VDRV
PWM
THWN/DISB*/NC
DISB*/THWN/NC
ZCD*/NC
NC/GH/VIN_S
PGND<1> PGND<2> PGND<3> PGND<4> PGND<5> PGND<6>
BOOT
VSWH
VSWH<1> … VSWH<11>
GL<1>
GL<2>
PS_FBVDD_PH4_VCC
PS_FBVDD_PH4_VDRV
PS_FBVDD_PWM2
PS_FBVDD_PWM3
PS_FBVDD_TMON
PS_FBVDD_DRVON
PS_FBVDD_PH4_PWMIN
PS_FBVDD_S_TMON_PH4
PS_FBVDD_PH4_ZCD
PS_FBVDDQ_PH4_VIN_S
37,38,41
37,38,40
37,38,38,38,39,40,41,78
38,39,40,41
IN
OUT
R1931 0ohm 0402 0.05 ohm COMMON
R1725 0ohm 0402 0.05 ohm COMMON
R1579 0ohm 0402 0.05 ohm COMMON
R1728 10k 5 % 0402 COMMON
nv_res
R1724 25.5k 1 % 0402 COMMON
C2082 0.1uF 16V 10% X7R 0402 COMMON
R1796 0ohm 0402 0.05 ohm COMMON
R1584 0ohm 0.05 ohm 0402 COMMON
R1873 10k 5 % 0402 COMMON
R1874 10k 5 % 0402 COMMON
PS_FBVDD_PH4_BOOT
PS_FBVDD_PH4_PHASE
PS_FBVDD_PH4_BOOT_RC
R1543 0ohm 0402 COMMON
C2023 0.1uF 0402 16V 10% X7R COMMON
C2085 0.1uF 16V 10% X7R 0402 COMMON
PS_FBVDD_PHASE4_SW
C2084 1nF 25V 10% X7R 0402 COMMON
PS_FBVDD_PH4_SNUB
R1729 1ohm 5 % 0805 COMMON
FBVDDQ_GL_PH4
TP42
L230 0.22uH TH COMMON
L231 0.22uH TH COMMON
nv_ind
L232 0.22uH SMD_13X8 COMMON
L233 0.22uH SMD_12X8 COMMON
L234 0.33uH SMD_12X8 COMMON
L235 0.22uH SMD_12X8 COMMON
FBVDDQ
L230,L231
PCB CO-LAYOUT
R1544 0ohm 0402 0.05 ohm COMMON
R1730 0ohm 0402 0.05 ohm COMMON
PS_FBVDD_CSN4
PS_FBVDD_PH4
38
R1585 0ohm 0402 0.05 ohm COMMON
12V_F
RS17 0.001ohm 1206_VIRTUAL_4PIN COMMON
Q65 AONR21357 DFN3X3 COMMON
-17A 25V
D S 4G
1G1D3S
PS_FB_PH234_Q_G
40,41
FBVDD PH3 INPUT ANTI-BACKDRIVE
C2075 0.1uF 16V 10% X7R 0402 COMMON
C2078 0.1uF 16V 10% X7R 0402 COMMON
C2079 0.1uF 16V 10% X7R 0402 COMMON
C2069 270uF COMMON 20% 16V@105degC AL-Polymer 5.08A@105degC,100KHz 0.01ohm TH_D63P25
nv_capp
C2080 100uF COMMON 20% 16V@105degC TA-Polymer 1.33A@85degC,100KHz 0.05ohm SMD_7343
C2156 100uF COMMON 20% 16V@105degC AL-Polymer 2.49A@105degC,100KHz 0.024ohm SMD_D60
DT
QD

MICRO-STAR INT'L CO.,LTD

MS-V389

Size Custom

Document Description PS: FBVDD PH4

Rev 1.1

Date: Thursday, July 23, 2020

PS: FBVDD OUTPUT CAP

3x 820uF TH FBVDD OUTPUT BULK CAPS

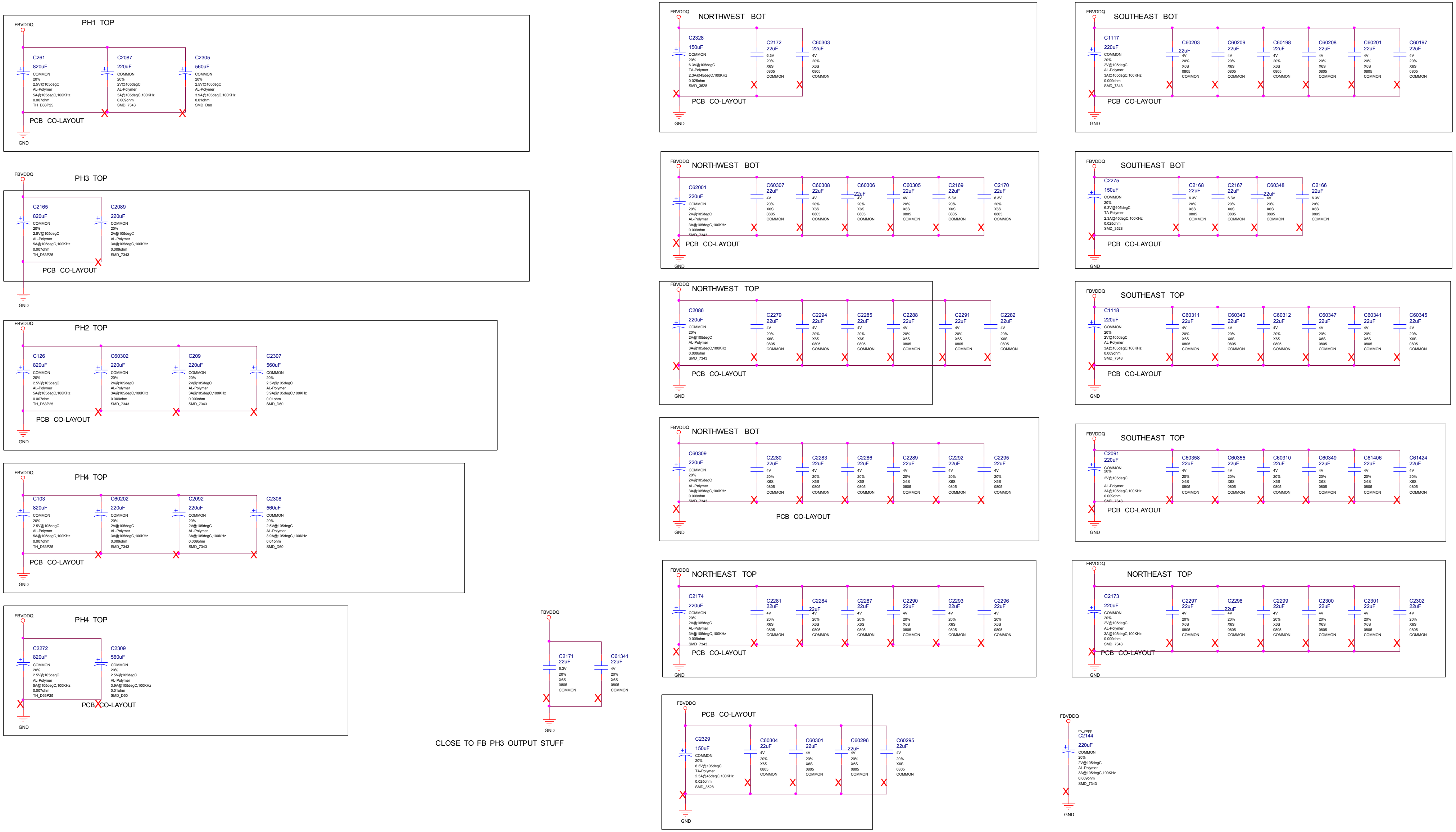
PH1 TOP
FBVDDQ
C261 820uF
C2087 220uF
C2305 560uF
PCB CO-LAYOUT
GND
PH3 TOP
C2165 820uF
C2089 220uF
PH2 TOP
C126 820uF
C60302 220uF
C209 220uF
C2307 560uF
PH4 TOP
C103 820uF
C60202 220uF
C2092 220uF
C2308 560uF
PH4 TOP
C2272 820uF
C2309 560uF
C2171 22uF
C61341 22uF
CLOSE TO FB PH3 OUTPUT STUFF
NORTHWEST BOT
C2328 150uF
C2172 22uF
C60303 22uF
SOUTHEAST BOT
C1117 220uF
C60203 22uF
C60209 22uF
C60198 22uF
C60208 22uF
C60201 22uF
C60197 22uF
NORTHWEST BOT
C62001 220uF
C60307 22uF
C60308 22uF
C60306 22uF
C60305 22uF
C2169 22uF
C2170 22uF
SOUTHEAST BOT
C2275 150uF
C2168 22uF
C2167 22uF
C60348 22uF
C2166 22uF
NORTHWEST TOP
C2086 220uF
C2279 22uF
C2294 22uF
C2285 22uF
C2288 22uF
C2291 22uF
C2282 22uF
SOUTHEAST TOP
C1118 220uF
C60311 22uF
C60340 22uF
C60312 22uF
C60347 22uF
C60341 22uF
C60345 22uF
NORTHWEST BOT
C60309 220uF
C2280 22uF
C2283 22uF
C2286 22uF
C2289 22uF
C2292 22uF
C2295 22uF
SOUTHEAST TOP
C2091 220uF
C60358 22uF
C60355 22uF
C60310 22uF
C60349 22uF
C61406 22uF
C61424 22uF
NORTHEAST TOP
C2174 220uF
C2281 22uF
C2284 22uF
C2287 22uF
C2290 22uF
C2293 22uF
C2296 22uF
NORTHEAST TOP
C2173 220uF
C2297 22uF
C2298 22uF
C2299 22uF
C2300 22uF
C2301 22uF
C2302 22uF
PCB CO-LAYOUT
C2329 150uF
C60304 22uF
C60301 22uF
C60296 22uF
C60295 22uF
C2144 220uF

MICRO-STAR INT'L CO.,LTD

MS-V389

Size	Document Description	Rev
Custom	PS: FBVDD OUTPUT CAP	1.1

Date: Thursday, July 23, 2020 Sheet 43 of 76

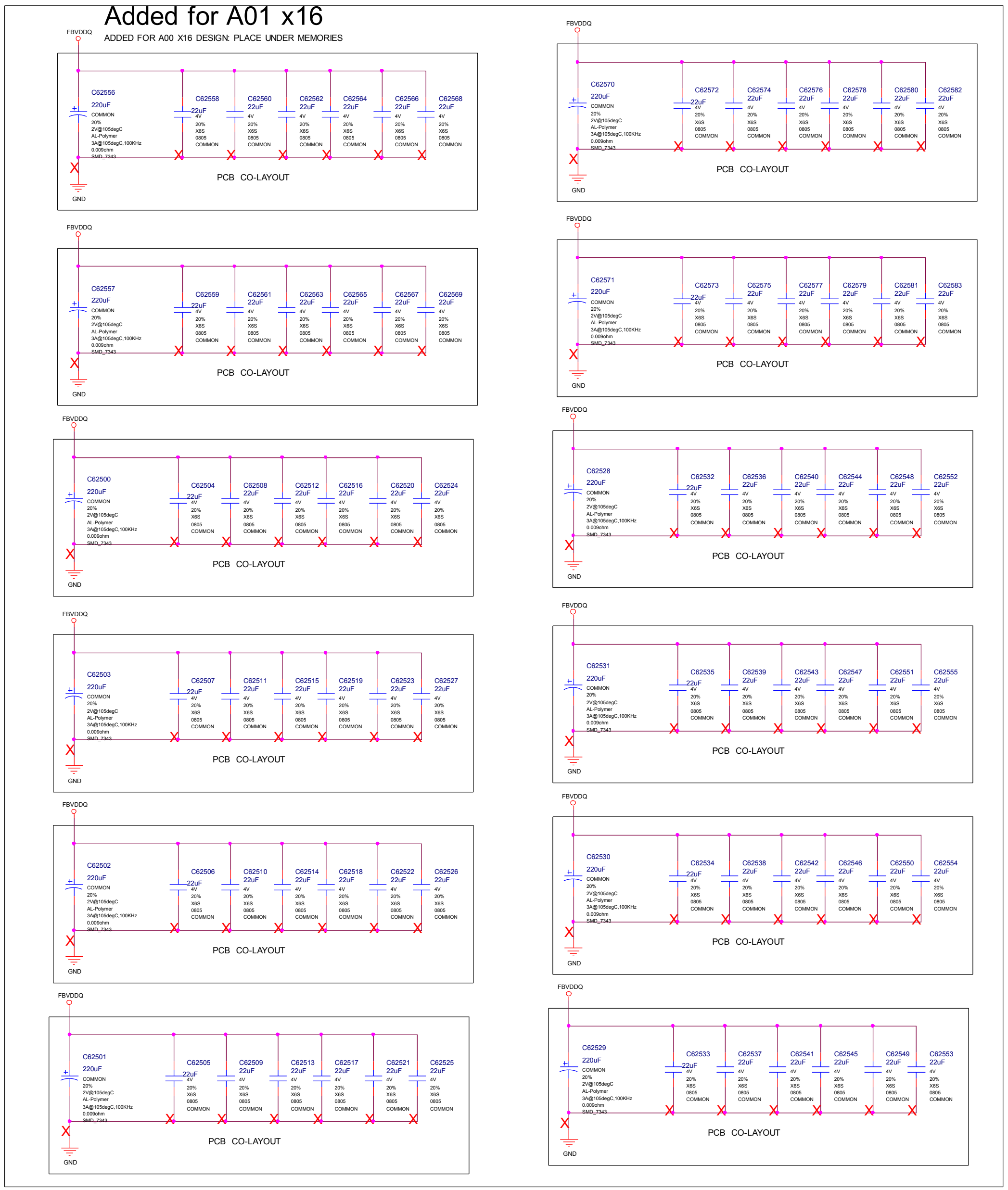
Added for A01 x16
ADDED FOR A00 X16 DESIGN: PLACE UNDER MEMORIES
FBVDDQ
GND
PCB CO-LAYOUT
220uF
COMMON
20%
2V@105degC
AL-Polymer
3A@105degC,100KHz
0.009ohm
SMD_7343
22uF
4V
20%
X6S
0805
COMMON
C62556
C62558
C62560
C62562
C62564
C62566
C62568
C62557
C62559
C62561
C62563
C62565
C62567
C62569
C62500
C62504
C62508
C62512
C62516
C62520
C62524
C62503
C62507
C62511
C62515
C62519
C62523
C62527
C62502
C62506
C62510
C62514
C62518
C62522
C62526
C62501
C62505
C62509
C62513
C62517
C62521
C62525
C62570
C62572
C62574
C62576
C62578
C62580
C62582
C62571
C62573
C62575
C62577
C62579
C62581
C62583
C62528
C62532
C62536
C62540
C62544
C62548
C62552
C62531
C62535
C62539
C62543
C62547
C62551
C62555
C62530
C62534
C62538
C62542
C62546
C62550
C62554
C62529
C62533
C62537
C62541
C62545
C62549
C62553

MICRO-STAR INT'L CO.,LTD		
MS-V389		
Size Custom	Document Description PS: FBVDD_OUTPUT_CAP_NEAR_MEMORY	Rev 1.1
Date: Thursday, July 23, 2020	Sheet 44 of 76	

PS: MSVDD

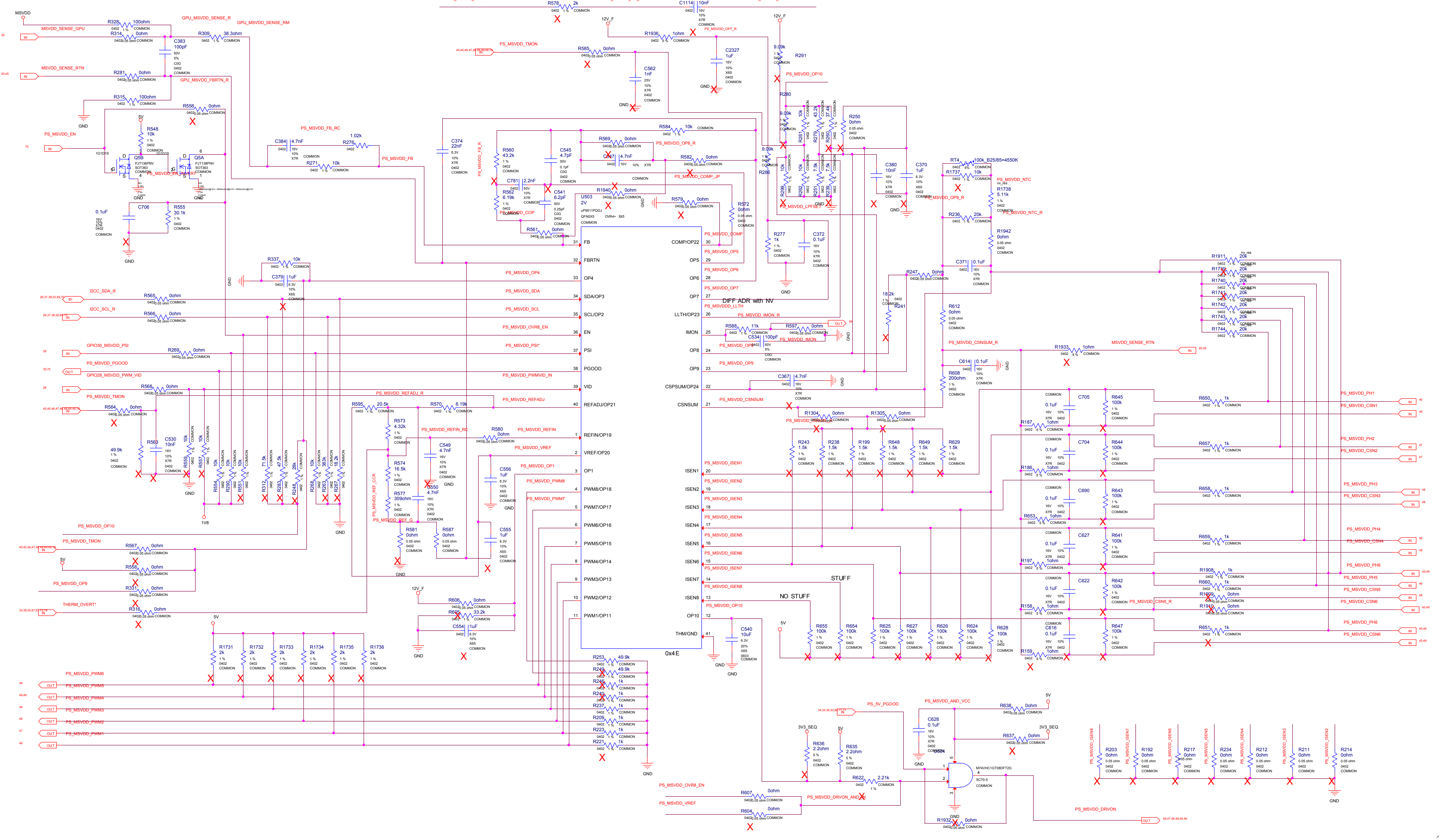

MSVDD
MSVDD_SENSE_GPU
MSVDD_SENSE_RTN
GPU_MSVDD_SENSE_R
GPU_MSVDD_SENSE_RM
GPU_MSVDD_FBRTN_R
PS_MSVDD_EN
PS_MSVDD_FB_RC
PS_MSVDD_FB
PS_MSVDD_OP5
PS_MSVDD_AC_LL
PS_MSVDD_IMON
PS_MSVDD_TMON
PS_MSVDD_OP10
PS_MSVDD_NTC
PS_MSVDD_NTC_R
PS_MSVDD_COMP
PS_MSVDD_COMP_JP
PS_MSVDD_LPFSET
PS_MSVDD_CSNSUM_R
MSVDD_SENSE_RTN
U503
uP9511PQGJ
QFN5X5
0x4E
FB
FBRTN
OP4
SDA/OP3
SCL/OP2
EN
PSI
PGOOD
VID
REFADJ/OP21
REFIN/OP19
VREF/OP20
OP1
PWM8/OP18
PWM7/OP17
PWM6/OP16
PWM5/OP15
PWM4/OP14
PWM3/OP13
PWM2/OP12
PWM1/OP11
COMP/OP22
OP5
OP6
OP7
LLTH/OP23
IMON
OP8
OP9
CSPSUM/OP24
CSNSUM
ISEN1
ISEN2
ISEN3
ISEN4
ISEN5
ISEN6
ISEN7
ISEN8
OP10
THM/GND
DIFF ADR with NV
STUFF
NO STUFF
I2CS_SDA_R
I2CS_SCL_R
GPIO30_MSVDD_PSI
PS_MSVDD_PGOOD
GPIO28_MSVDD_PWM_VID
THERM_OVERT*
PS_MSVDD_PWM1
PS_MSVDD_PWM2
PS_MSVDD_PWM3
PS_MSVDD_PWM4
PS_MSVDD_PWM5
PS_MSVDD_PWM6
PS_MSVDD_PH1
PS_MSVDD_CSN1
PS_MSVDD_PH2
PS_MSVDD_CSN2
PS_MSVDD_PH3
PS_MSVDD_CSN3
PS_MSVDD_PH4
PS_MSVDD_CSN4
PS_MSVDD_PH5
PS_MSVDD_CSN5
PS_MSVDD_PH6
PS_MSVDD_CSN6
PS_MSVDD_ISEN1
PS_MSVDD_ISEN2
PS_MSVDD_ISEN3
PS_MSVDD_ISEN4
PS_MSVDD_ISEN5
PS_MSVDD_ISEN6
PS_MSVDD_ISEN7
PS_MSVDD_ISEN8
PS_5V_PGOOD
PS_MSVDD_AND_VCC
PS_MSVDD_OVR8_EN
PS_MSVDD_VREF
PS_MSVDD_DRVON_AND
PS_MSVDD_DRVON
U504
M74VHC1G08DFT2G
SC70-5
12V_F
5V
3V3_SEQ
1V8
GND

MICRO-STAR INT'L CO.,LTD		
MS-V389		
Size Custom	Document Description PS: MSVDD	Rev 1.1
Date: Thursday, July 23, 2020	Sheet 45 of 76	

PS: MSVDD Phase 1

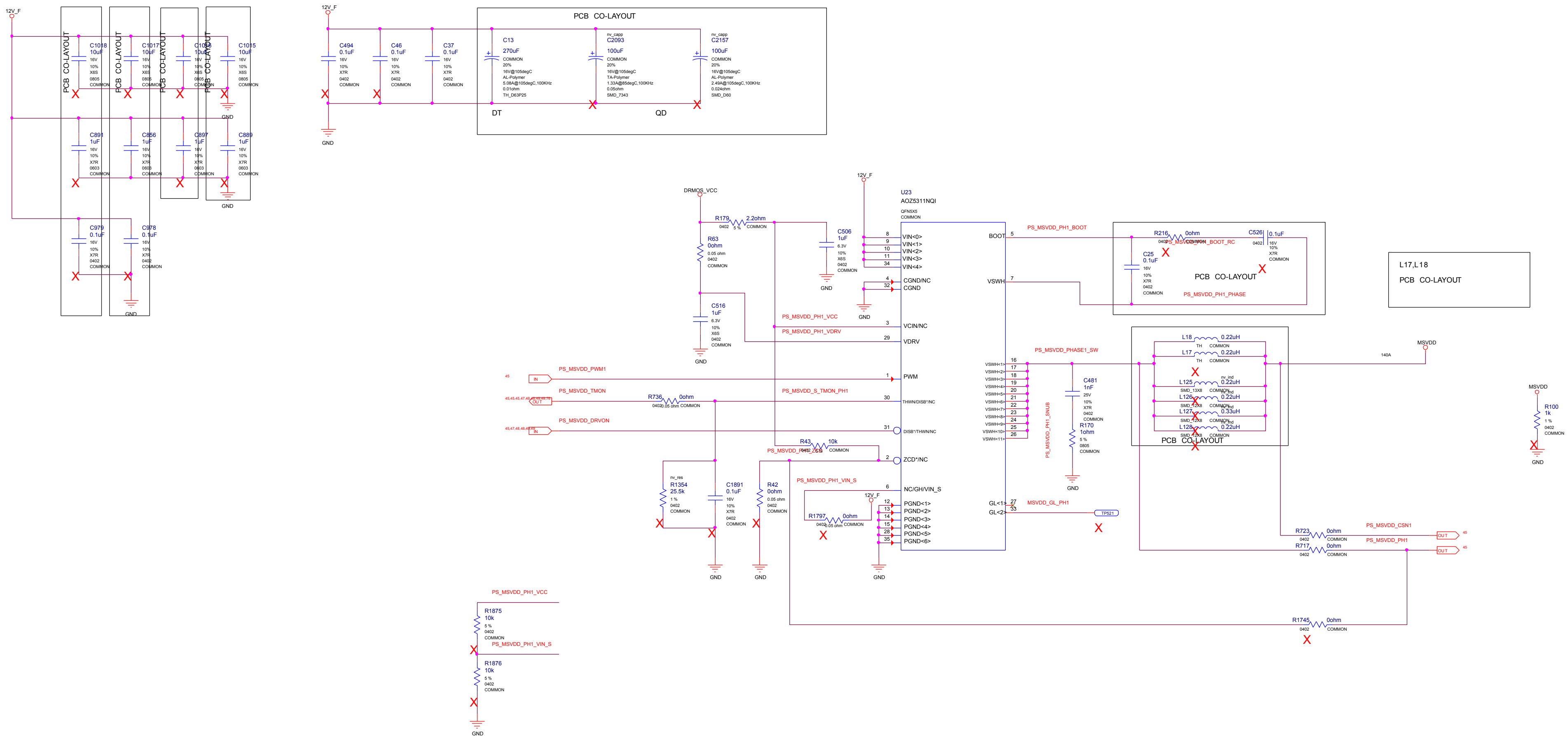
12V_F
PCB CO-LAYOUT
C1018 10uF 16V 10% X6S 0805 COMMON
C1017 10uF 16V 10% X6S 0805 COMMON
C1014 10uF 16V 10% X6S 0805 COMMON
C1015 10uF 16V 10% X6S 0805 COMMON
C891 1uF 16V 10% X7R 0603 COMMON
C856 1uF 16V 10% X7R 0603 COMMON
C897 1uF 16V 10% X7R 0603 COMMON
C889 1uF 16V 10% X7R 0603 COMMON
C979 0.1uF 16V 10% X7R 0402 COMMON
C978 0.1uF 16V 10% X7R 0402 COMMON
GND
C494 0.1uF 16V 10% X7R 0402 COMMON
C46 0.1uF 16V 10% X7R 0402 COMMON
C37 0.1uF 16V 10% X7R 0402 COMMON
C13 270uF COMMON 20% 16V@105degC AL-Polymer 5.08A@105degC,100KHz 0.01ohm TH_D63P25
nv_capp C2093 100uF COMMON 20% 16V@105degC TA-Polymer 1.33A@85degC,100KHz 0.05ohm SMD_7343
nv_capp C2157 100uF COMMON 20% 16V@105degC AL-Polymer 2.49A@105degC,100KHz 0.024ohm SMD_D60
DT
QD
DRMOS_VCC
R179 2.2ohm 0402 5 % COMMON
R63 0ohm 0.05 ohm 0402 COMMON
C516 1uF 6.3V 10% X6S 0402 COMMON
C506 1uF 6.3V 10% X6S 0402 COMMON
U23 AOZ5311NQI QFN5X5 COMMON
VIN<0> VIN<1> VIN<2> VIN<3> VIN<4>
CGND/NC CGND
VCIN/NC
VDRV
PWM
THWN/DISB*/NC
DISB*/THWN/NC
ZCD*/NC
NC/GH/VIN_S
PGND<1> PGND<2> PGND<3> PGND<4> PGND<5> PGND<6>
BOOT
VSWH
VSWH<1> … VSWH<11>
GL<1> GL<2>
PS_MSVDD_PH1_BOOT
R216 0ohm 0402 COMMON
PS_MSVDD_PH1_BOOT_RC
C526 0.1uF 16V 10% X7R 0402 COMMON
C25 0.1uF 16V 10% X7R 0402 COMMON
PS_MSVDD_PH1_PHASE
L17,L18
PCB CO-LAYOUT
PS_MSVDD_PHASE1_SW
L18 0.22uH TH COMMON
L17 0.22uH TH COMMON
L125 0.22uH SMD_13X8 COMMON
L126 0.22uH SMD_12X8 COMMON
L127 0.33uH SMD_12X8 COMMON
L128 0.22uH SMD_12X8 COMMON
C481 1nF 25V 10% X7R 0402 COMMON
R170 1ohm 5 % 0805 COMMON
PS_MSVDD_PH1_SNUB
MSVDD
140A
R100 1k 1 % 0402 COMMON
PS_MSVDD_PWM1
PS_MSVDD_TMON
PS_MSVDD_DRVON
PS_MSVDD_PH1_VCC
PS_MSVDD_PH1_VDRV
PS_MSVDD_S_TMON_PH1
R736 0ohm 0402 0.05 ohm COMMON
R43 10k 0402 5 % COMMON
PS_MSVDD_PH1_VIN_S
nv_res R1354 25.5k 1 % 0402 COMMON
C1891 0.1uF 16V 10% X7R 0402 COMMON
R42 0ohm 0.05 ohm 0402 COMMON
R1797 0ohm 0402 0.05 ohm COMMON
MSVDD_GL_PH1
TP521
R723 0ohm 0402 COMMON
PS_MSVDD_CSN1
R717 0ohm 0402 COMMON
PS_MSVDD_PH1
R1745 0ohm 0402 COMMON
R1875 10k 5 % 0402 COMMON
R1876 10k 5 % 0402 COMMON
IN
OUT

MICRO-STAR INT'L CO.,LTD

MS-V389

Size	Document Description	Rev
Custom	PS: MSVDD Phase 1	1.1

Date: Thursday, July 23, 2020 Sheet 46 of 76

PS: MSVDD PH 2

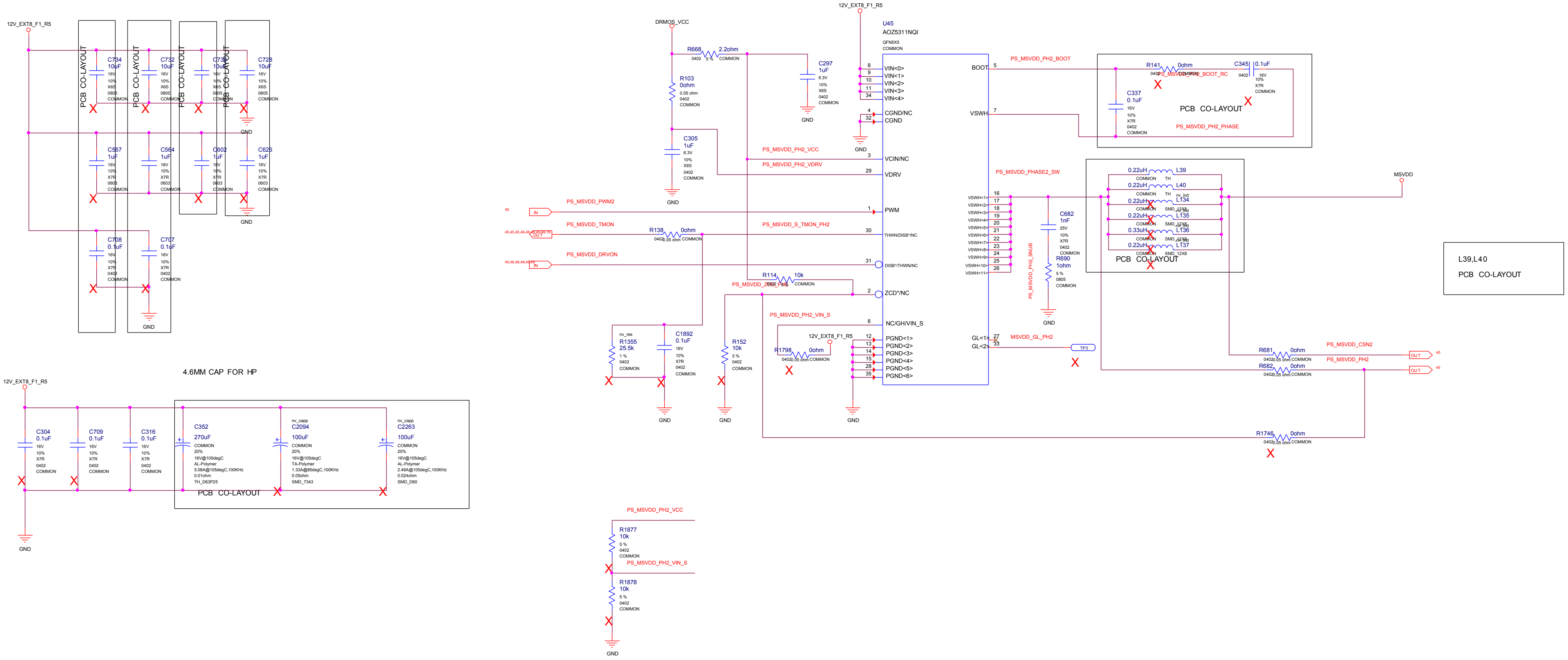
12V_EXT8_F1_R5
PCB CO-LAYOUT
C734 10uF
C732 10uF
C733 10uF
C728 10uF
C557 1uF
C564 1uF
C602 1uF
C625 1uF
C708 0.1uF
C707 0.1uF
GND
4.6MM CAP FOR HP
C304 0.1uF
C709 0.1uF
C316 0.1uF
C352 270uF
C2094 100uF
C2263 100uF
PCB CO-LAYOUT
DRMOS_VCC
R668 2.2ohm
R103 0ohm
C305 1uF
C297 1uF
U45
AOZ5311NQI
QFN5X5
VIN<0>
VIN<1>
VIN<2>
VIN<3>
VIN<4>
CGND/NC
CGND
VCIN/NC
VDRV
PWM
THWN/DISB*/NC
DISB*/THWN/NC
ZCD*/NC
NC/GH/VIN_S
PGND<1>
PGND<2>
PGND<3>
PGND<4>
PGND<5>
PGND<6>
BOOT
VSWH
GL<1>
GL<2>
PS_MSVDD_PH2_VCC
PS_MSVDD_PH2_VDRV
PS_MSVDD_PWM2
PS_MSVDD_TMON
PS_MSVDD_DRVON
PS_MSVDD_S_TMON_PH2
PS_MSVDD_PH2_VIN_S
R138 0ohm
R114 10k
R1355 25.5k
C1892 0.1uF
R152 10k
R1798 0ohm
PS_MSVDD_PH2_BOOT
R141 0ohm
C345 0.1uF
C337 0.1uF
PS_MSVDD_PH2_BOOT_RC
PS_MSVDD_PH2_PHASE
PCB CO-LAYOUT
PS_MSVDD_PHASE2_SW
C682 1nF
R690 1ohm
PS_MSVDD_PH2_SNUB
L39 0.22uH
L40 0.22uH
L134 0.22uH
L135 0.22uH
L136 0.33uH
L137 0.22uH
MSVDD
MSVDD_GL_PH2
TP3
R681 0ohm
R682 0ohm
PS_MSVDD_CSN2
PS_MSVDD_PH2
R1746 0ohm
L39,L40
PCB CO-LAYOUT
R1877 10k
R1878 10k
IN
OUT

MICRO-STAR INT'L CO.,LTD

MS-V389

Size	Document Description	Rev
Custom	PS: MSVDD PH 2	1.1

Date: Thursday, July 23, 2020 Sheet 47 of 76

PS:MSVDD Phase 3, 5

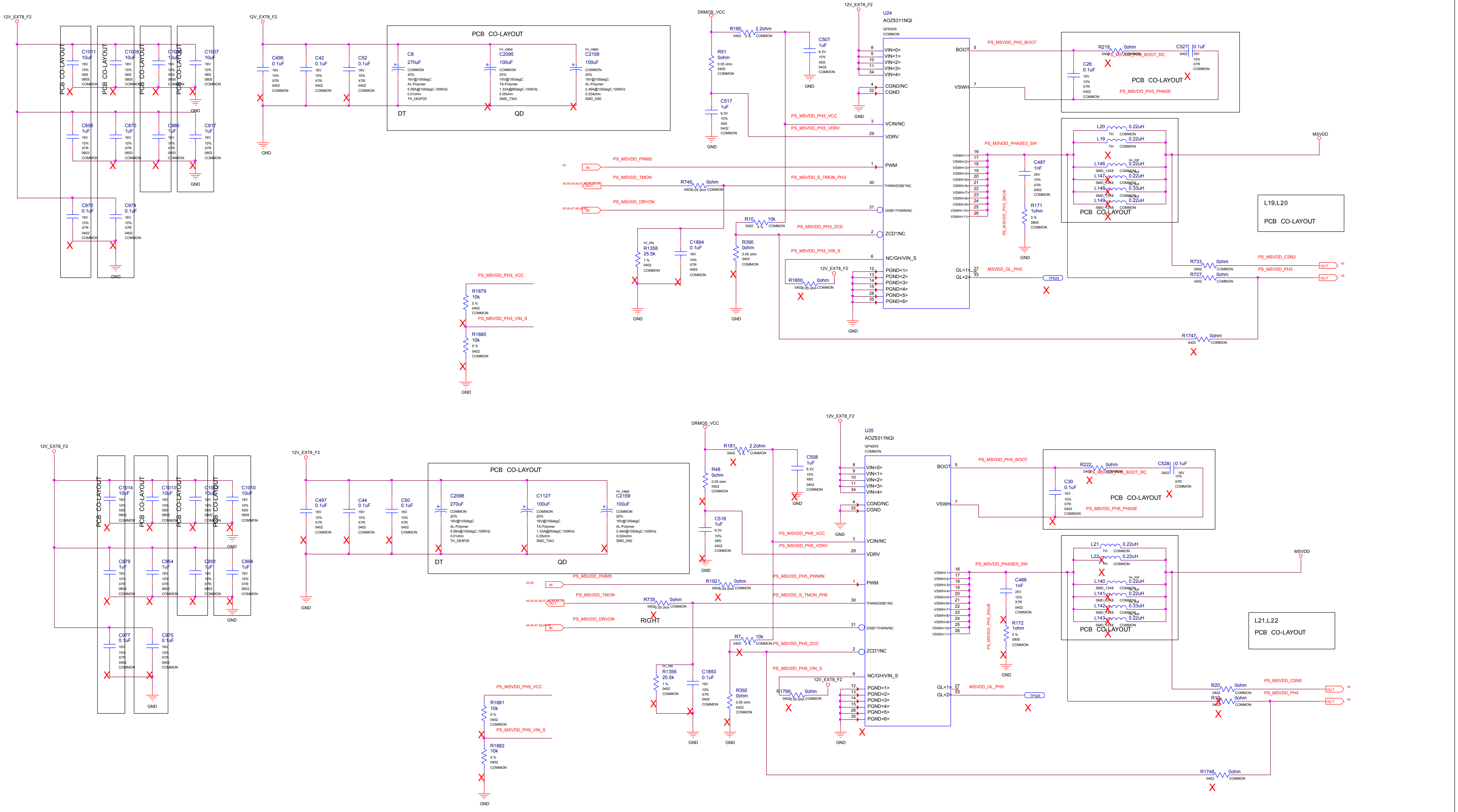

12V_EXT8_F2
DRMOS_VCC
U24
AOZ5311NQI
QFN5X5
COMMON
VIN<0>
VIN<1>
VIN<2>
VIN<3>
VIN<4>
CGND/NC
CGND
VCIN/NC
VDRV
PWM
THWN/DISB*/NC
DISB*/THWN/NC
ZCD*/NC
NC/GH/VIN_S
PGND<1>
PGND<2>
PGND<3>
PGND<4>
PGND<5>
PGND<6>
BOOT
VSWH
GL<1>
GL<2>
PCB CO-LAYOUT
DT
QD
C8 270uF
C2095 100uF
C2158 100uF
C495 0.1uF
C42 0.1uF
C52 0.1uF
C1011 10uF
C1009 10uF
C1007 10uF
C858 1uF
C870 1uF
C886 1uF
C917 1uF
C976 0.1uF
C974 0.1uF
R180 2.2ohm
C507 1uF
R161 0ohm
C517 1uF
R746 0ohm
R10 10k
R390 0ohm
C1894 0.1uF
R1358 25.5k
R1800 0ohm
R1879 10k
R1880 10k
R219 0ohm
C527 0.1uF
C26 0.1uF
L20 0.22uH
L19 0.22uH
L146 0.22uH
L147 0.22uH
L148 0.33uH
L149 0.22uH
C487 1nF
R171 1ohm
R733 0ohm
R727 0ohm
R1747 0ohm
TP529
MSVDD
L19,L20
PCB CO-LAYOUT
PS_MSVDD_PH3_BOOT
PS_MSVDD_PH3_BOOT_RC
PS_MSVDD_PH3_PHASE
PS_MSVDD_PHASE3_SW
PS_MSVDD_PH3_SNUB
PS_MSVDD_PWM3
PS_MSVDD_TMON
PS_MSVDD_DRVON
PS_MSVDD_PH3_VCC
PS_MSVDD_PH3_VDRV
PS_MSVDD_S_TMON_PH3
PS_MSVDD_PH3_ZCD
PS_MSVDD_PH3_VIN_S
PS_MSVDD_GL_PH3
PS_MSVDD_CSN3
PS_MSVDD_PH3
U25
AOZ5311NQI
C2096 270uF
C1127 100uF
C2159 100uF
C497 0.1uF
C44 0.1uF
C50 0.1uF
C1014 10uF
C1013 10uF
C1010 10uF
C879 1uF
C854 1uF
C851 1uF
C894 1uF
C977 0.1uF
C975 0.1uF
R181 2.2ohm
C508 1uF
R48 0ohm
C518 1uF
R1921 0ohm
R735 0ohm
RIGHT
R7 10k
R392 0ohm
C1893 0.1uF
R1356 25.5k
R1799 0ohm
R1881 10k
R1882 10k
R222 0ohm
C528 0.1uF
C30 0.1uF
L21 0.22uH
L22 0.22uH
L140 0.22uH
L141 0.22uH
L142 0.33uH
L143 0.22uH
C486 1nF
R172 1ohm
R20 0ohm
R19 0ohm
R1748 0ohm
TP526
L21,L22
PCB CO-LAYOUT
PS_MSVDD_PH5_BOOT
PS_MSVDD_PH5_BOOT_RC
PS_MSVDD_PH5_PHASE
PS_MSVDD_PHASE5_SW
PS_MSVDD_PH5_SNUB
PS_MSVDD_PWM5
PS_MSVDD_PH5_PWMIN
PS_MSVDD_PH5_VCC
PS_MSVDD_PH5_VDRV
PS_MSVDD_S_TMON_PH5
PS_MSVDD_PH5_ZCD
PS_MSVDD_PH5_VIN_S
PS_MSVDD_GL_PH5
PS_MSVDD_CSN5
PS_MSVDD_PH5
GND
IN
OUT

MICRO-STAR INT'L CO.,LTD

MS-V389

Size	Document Description	Rev
Custom	PS:MSVDD Phase 3, 5	1.1

Date: Thursday, July 23, 2020 Sheet 48 of 76

PS: MSVDD PH 4,6

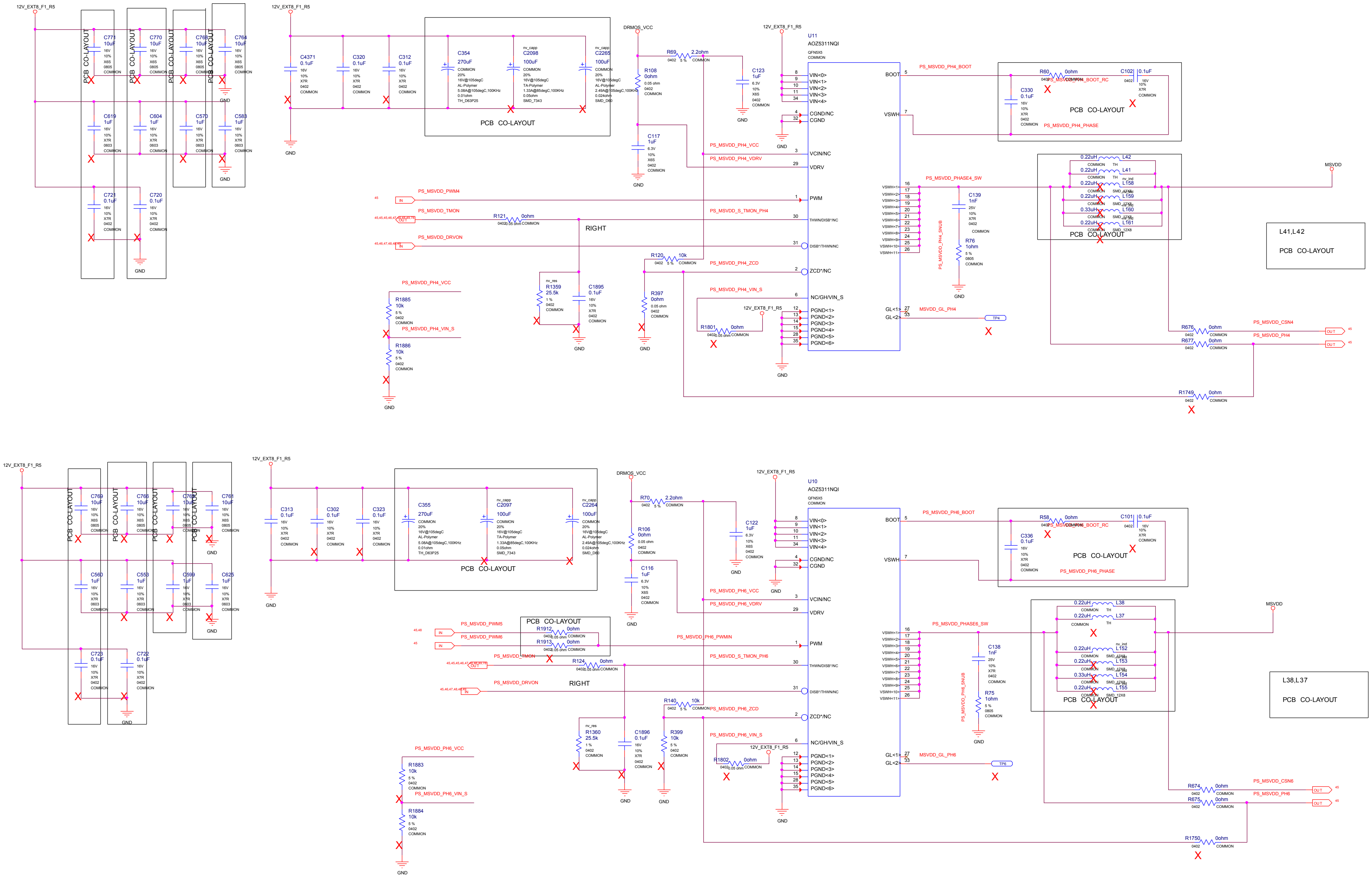
12V_EXT8_F1_R5
PCB CO-LAYOUT
C771 10uF
C770 10uF
C769 10uF
C764 10uF
C619 1uF
C604 1uF
C570 1uF
C583 1uF
C721 0.1uF
C720 0.1uF
GND
C4371 0.1uF
C320 0.1uF
C312 0.1uF
C354 270uF
C2098 100uF
C2265 100uF
DRMOS_VCC
R69 2.2ohm
R108 0ohm
C117 1uF
C123 1uF
U11
AOZ5311NQI
QFN5X5
COMMON
VIN<0>
VIN<1>
VIN<2>
VIN<3>
VIN<4>
CGND/NC
CGND
VCIN/NC
VDRV
PWM
THWN/DISB*/NC
DISB*/THWN/NC
ZCD*/NC
NC/GH/VIN_S
PGND<1>
PGND<2>
PGND<3>
PGND<4>
PGND<5>
PGND<6>
BOOT
VSWH
GL<1>
GL<2>
PS_MSVDD_PH4_BOOT
PS_MSVDD_PH4_BOOT_RC
PS_MSVDD_PH4_PHASE
PS_MSVDD_PH4_VCC
PS_MSVDD_PH4_VDRV
PS_MSVDD_PWM4
PS_MSVDD_TMON
PS_MSVDD_DRVON
PS_MSVDD_S_TMON_PH4
PS_MSVDD_PH4_ZCD
PS_MSVDD_PH4_VIN_S
PS_MSVDD_PHASE4_SW
PS_MSVDD_PH4_SNUB
MSVDD_GL_PH4
TP4
R60 0ohm
C102 0.1uF
C330 0.1uF
L42 0.22uH
L41 0.22uH
L158 0.22uH
L159 0.22uH
L160 0.33uH
L161 0.22uH
C139 1nF
R76 1ohm
MSVDD
L41,L42
PCB CO-LAYOUT
R121 0ohm
RIGHT
R120 10k
R1359 25.5k
C1895 0.1uF
R397 0ohm
R1801 0ohm
R1885 10k
R1886 10k
R676 0ohm
R677 0ohm
R1749 0ohm
PS_MSVDD_CSN4
PS_MSVDD_PH4
IN
OUT
C768 10uF
C766 10uF
C767 10uF
C761 10uF
C560 1uF
C553 1uF
C599 1uF
C625 1uF
C723 0.1uF
C722 0.1uF
C313 0.1uF
C302 0.1uF
C323 0.1uF
C355 270uF
C2097 100uF
C2264 100uF
R70 2.2ohm
R106 0ohm
C116 1uF
C122 1uF
U10
AOZ5311NQI
PS_MSVDD_PH6_BOOT
PS_MSVDD_PH6_BOOT_RC
PS_MSVDD_PH6_PHASE
PS_MSVDD_PH6_VCC
PS_MSVDD_PH6_VDRV
PS_MSVDD_PWM5
PS_MSVDD_PWM6
PS_MSVDD_PH6_PWMIN
PS_MSVDD_S_TMON_PH6
PS_MSVDD_PH6_ZCD
PS_MSVDD_PH6_VIN_S
PS_MSVDD_PHASE6_SW
PS_MSVDD_PH6_SNUB
MSVDD_GL_PH6
TP6
R58 0ohm
C101 0.1uF
C336 0.1uF
L38 0.22uH
L37 0.22uH
L152 0.22uH
L153 0.22uH
L154 0.33uH
L155 0.22uH
C138 1nF
R75 1ohm
L38,L37
PCB CO-LAYOUT
R1912 0ohm
R1913 0ohm
R124 0ohm
R140 10k
R1360 25.5k
C1896 0.1uF
R399 10k
R1802 0ohm
R1883 10k
R1884 10k
R674 0ohm
R675 0ohm
R1750 0ohm
PS_MSVDD_CSN6
PS_MSVDD_PH6

MICRO-STAR INT'L CO.,LTD

MS-V389

Size	Document Description	Rev
Custom	PS: MSVDD PH 4,6	1.1

Date: Thursday, July 23, 2020 Sheet 49 of 76

PS:MSVDD OUTPUT CAP (TOP)

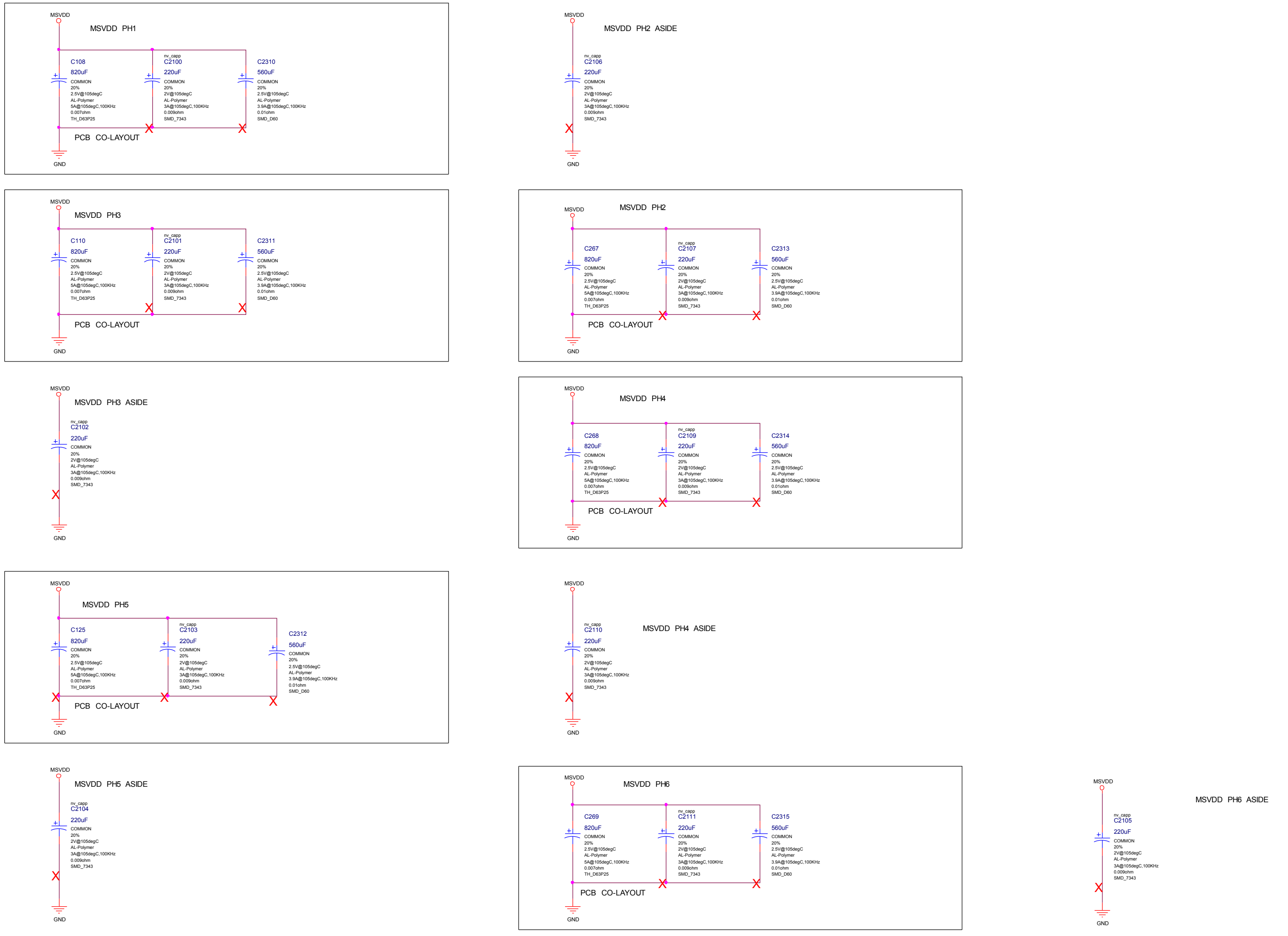
MSVDD
MSVDD PH1
C108
820uF
COMMON
20%
2.5V@105degC
AL-Polymer
5A@105degC,100KHz
0.007ohm
TH_D63P25
nv_capp
C2100
220uF
COMMON
20%
2V@105degC
AL-Polymer
3A@105degC,100KHz
0.009ohm
SMD_7343
C2310
560uF
COMMON
20%
2.5V@105degC
AL-Polymer
3.9A@105degC,100KHz
0.01ohm
SMD_D60
PCB CO-LAYOUT
GND
MSVDD
MSVDD PH2 ASIDE
nv_capp
C2106
220uF
COMMON
20%
2V@105degC
AL-Polymer
3A@105degC,100KHz
0.009ohm
SMD_7343
GND
MSVDD
MSVDD PH3
C110
820uF
COMMON
20%
2.5V@105degC
AL-Polymer
5A@105degC,100KHz
0.007ohm
TH_D63P25
nv_capp
C2101
220uF
COMMON
20%
2V@105degC
AL-Polymer
3A@105degC,100KHz
0.009ohm
SMD_7343
C2311
560uF
COMMON
20%
2.5V@105degC
AL-Polymer
3.9A@105degC,100KHz
0.01ohm
SMD_D60
PCB CO-LAYOUT
GND
MSVDD
MSVDD PH2
C267
820uF
COMMON
20%
2.5V@105degC
AL-Polymer
5A@105degC,100KHz
0.007ohm
TH_D63P25
nv_capp
C2107
220uF
COMMON
20%
2V@105degC
AL-Polymer
3A@105degC,100KHz
0.009ohm
SMD_7343
C2313
560uF
COMMON
20%
2.5V@105degC
AL-Polymer
3.9A@105degC,100KHz
0.01ohm
SMD_D60
PCB CO-LAYOUT
GND
MSVDD
MSVDD PH3 ASIDE
nv_capp
C2102
220uF
COMMON
20%
2V@105degC
AL-Polymer
3A@105degC,100KHz
0.009ohm
SMD_7343
GND
MSVDD
MSVDD PH4
C268
820uF
COMMON
20%
2.5V@105degC
AL-Polymer
5A@105degC,100KHz
0.007ohm
TH_D63P25
nv_capp
C2109
220uF
COMMON
20%
2V@105degC
AL-Polymer
3A@105degC,100KHz
0.009ohm
SMD_7343
C2314
560uF
COMMON
20%
2.5V@105degC
AL-Polymer
3.9A@105degC,100KHz
0.01ohm
SMD_D60
PCB CO-LAYOUT
GND
MSVDD
MSVDD PH5
C125
820uF
COMMON
20%
2.5V@105degC
AL-Polymer
5A@105degC,100KHz
0.007ohm
TH_D63P25
nv_capp
C2103
220uF
COMMON
20%
2V@105degC
AL-Polymer
3A@105degC,100KHz
0.009ohm
SMD_7343
C2312
560uF
COMMON
20%
2.5V@105degC
AL-Polymer
3.9A@105degC,100KHz
0.01ohm
SMD_D60
PCB CO-LAYOUT
GND
MSVDD
MSVDD PH4 ASIDE
nv_capp
C2110
220uF
COMMON
20%
2V@105degC
AL-Polymer
3A@105degC,100KHz
0.009ohm
SMD_7343
GND
MSVDD
MSVDD PH5 ASIDE
nv_capp
C2104
220uF
COMMON
20%
2V@105degC
AL-Polymer
3A@105degC,100KHz
0.009ohm
SMD_7343
GND
MSVDD
MSVDD PH6
C269
820uF
COMMON
20%
2.5V@105degC
AL-Polymer
5A@105degC,100KHz
0.007ohm
TH_D63P25
nv_capp
C2111
220uF
COMMON
20%
2V@105degC
AL-Polymer
3A@105degC,100KHz
0.009ohm
SMD_7343
C2315
560uF
COMMON
20%
2.5V@105degC
AL-Polymer
3.9A@105degC,100KHz
0.01ohm
SMD_D60
PCB CO-LAYOUT
GND
MSVDD
MSVDD PH6 ASIDE
nv_capp
C2105
220uF
COMMON
20%
2V@105degC
AL-Polymer
3A@105degC,100KHz
0.009ohm
SMD_7343
GND

MICRO-STAR INT'L CO.,LTD

MS-V389

Size Custom	Document Description PS:MSVDD OUTPUT CAP (TOP)	Rev 1.1
Date: Thursday, July 23, 2020	Sheet 50 of 76	

BLANK

PS: NVVDD Controller_OVR8

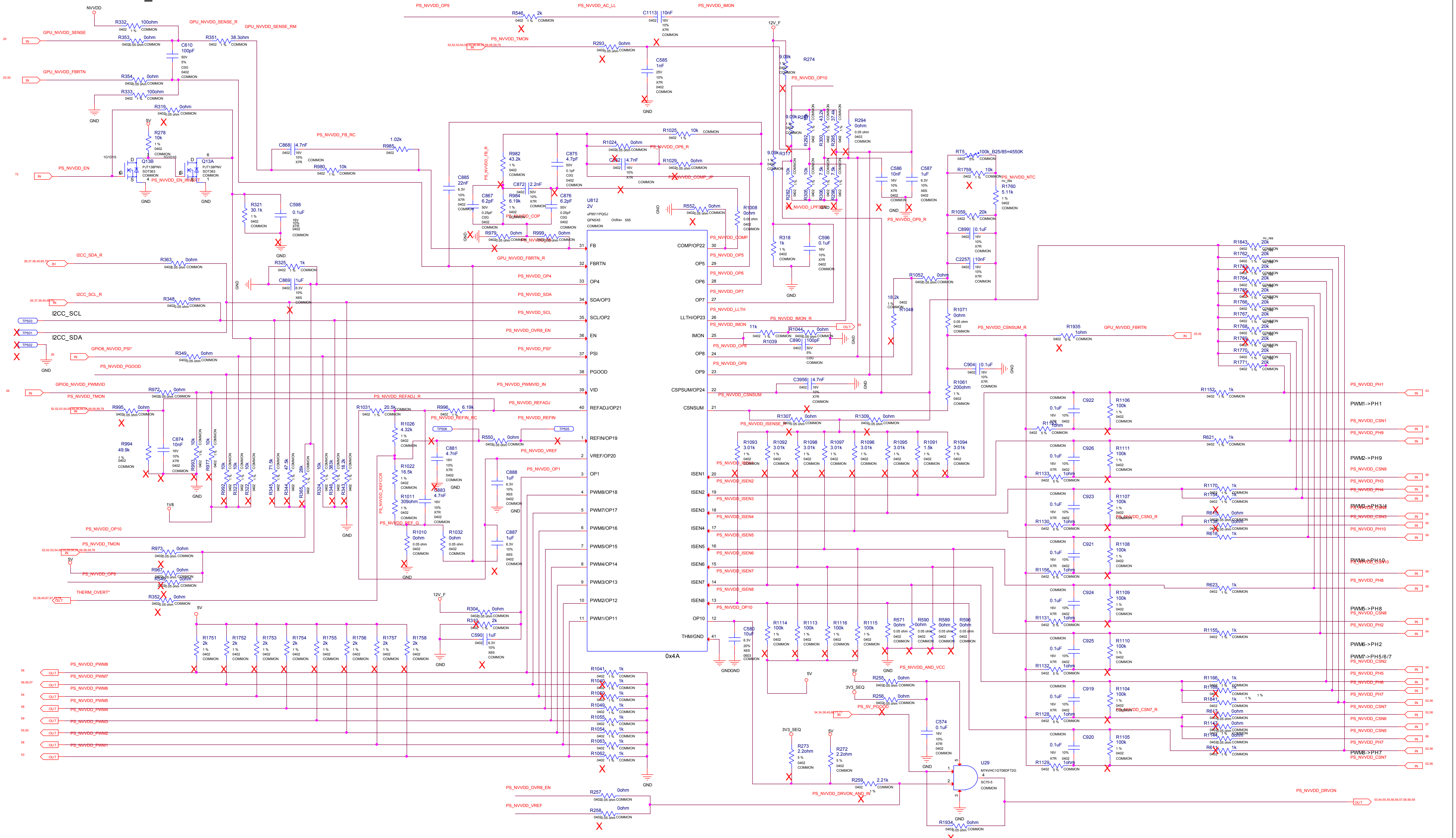
NVVDD
GPU_NVVDD_SENSE
GPU_NVVDD_SENSE_R
GPU_NVVDD_SENSE_RM
GPU_NVVDD_FBRTN
PS_NVVDD_EN
PS_NVVDD_EN_INVERT
Q13B
Q13A
I2CC_SDA_R
I2CC_SCL_R
I2CC_SCL
I2CC_SDA
GPIO6_NVVDD_PSI*
PS_NVVDD_PGOOD
GPIO0_NVVDD_PWMVID
PS_NVVDD_TMON
PS_NVVDD_OP10
PS_NVVDD_OP9
THERM_OVERT*
PS_NVVDD_OP5
PS_NVVDD_AC_LL
PS_NVVDD_IMON
PS_NVVDD_FB_RC
PS_NVVDD_OP6_R
PS_NVVDD_COMP_R
PS_NVVDD_COP
PS_NVVDD_LPF
PS_NVVDD_OP9_R
PS_NVVDD_NTC
U812
2V
uP9511PQGJ
QFN5X5
OVR4+ 5X5
FB
FBRTN
OP4
SDA/OP3
SCL/OP2
EN
PSI
PGOOD
VID
REFADJ/OP21
REFIN/OP19
VREF/OP20
OP1
PWM8/OP18
PWM7/OP17
PWM6/OP16
PWM5/OP15
PWM4/OP14
PWM3/OP13
PWM2/OP12
PWM1/OP11
COMP/OP22
OP5
OP6
OP7
LLTH/OP23
IMON
OP8
OP9
CSPSUM/OP24
CSNSUM
ISEN1
ISEN2
ISEN3
ISEN4
ISEN5
ISEN6
ISEN7
ISEN8
OP10
THM/GND
0x4A
PS_NVVDD_REFADJ_R
PS_NVVDD_REFIN_RC
PS_NVVDD_REFIN
PS_NVVDD_VREF
PS_NVVDD_OP1
PS_NVVDD_REFCCR
PS_NVVDD_REF_G
PS_NVVDD_PWM1
PS_NVVDD_PWM2
PS_NVVDD_PWM3
PS_NVVDD_PWM4
PS_NVVDD_PWM5
PS_NVVDD_PWM6
PS_NVVDD_PWM7
PS_NVVDD_PWM8
PS_NVVDD_CSNSUM
PS_NVVDD_CSNSUM_R
PS_NVVDD_ISEN1
PS_NVVDD_ISEN2
PS_NVVDD_ISEN3
PS_NVVDD_ISEN4
PS_NVVDD_ISEN5
PS_NVVDD_ISEN6
PS_NVVDD_ISEN7
PS_NVVDD_ISEN8
PS_NVVDD_AND_VCC
PS_NVVDD_DRVON
PS_NVVDD_DRVON_AND_IN
PS_5V_PGOOD
3V3_SEQ
U29
M74VHC1G08DFT2G
SC70-5
PS_NVVDD_OVR8_EN
PWM1->PH1
PWM2->PH9
PWM3->PH3/4
PWM4->PH10
PWM5->PH8
PWM6->PH2
PWM7->PH5/6/7
PWM8->PH7
PS_NVVDD_PH1
PS_NVVDD_PH2
PS_NVVDD_PH3
PS_NVVDD_PH4
PS_NVVDD_PH5
PS_NVVDD_PH6
PS_NVVDD_PH7
PS_NVVDD_PH8
PS_NVVDD_PH9
PS_NVVDD_PH10
PS_NVVDD_CSN1
PS_NVVDD_CSN2
PS_NVVDD_CSN3
PS_NVVDD_CSN5
PS_NVVDD_CSN6
PS_NVVDD_CSN7
PS_NVVDD_CSN8
PS_NVVDD_CSN9
12V_F
5V
GND

MICRO-STAR INT'L CO.,LTD

MS-V389

Size	Document Description	Rev
Custom	PS: NVVDD Controller_OVR8	1.1

Date: Thursday, July 23, 2020 | Sheet 52 of 76

PS: NVVDD Phase 1

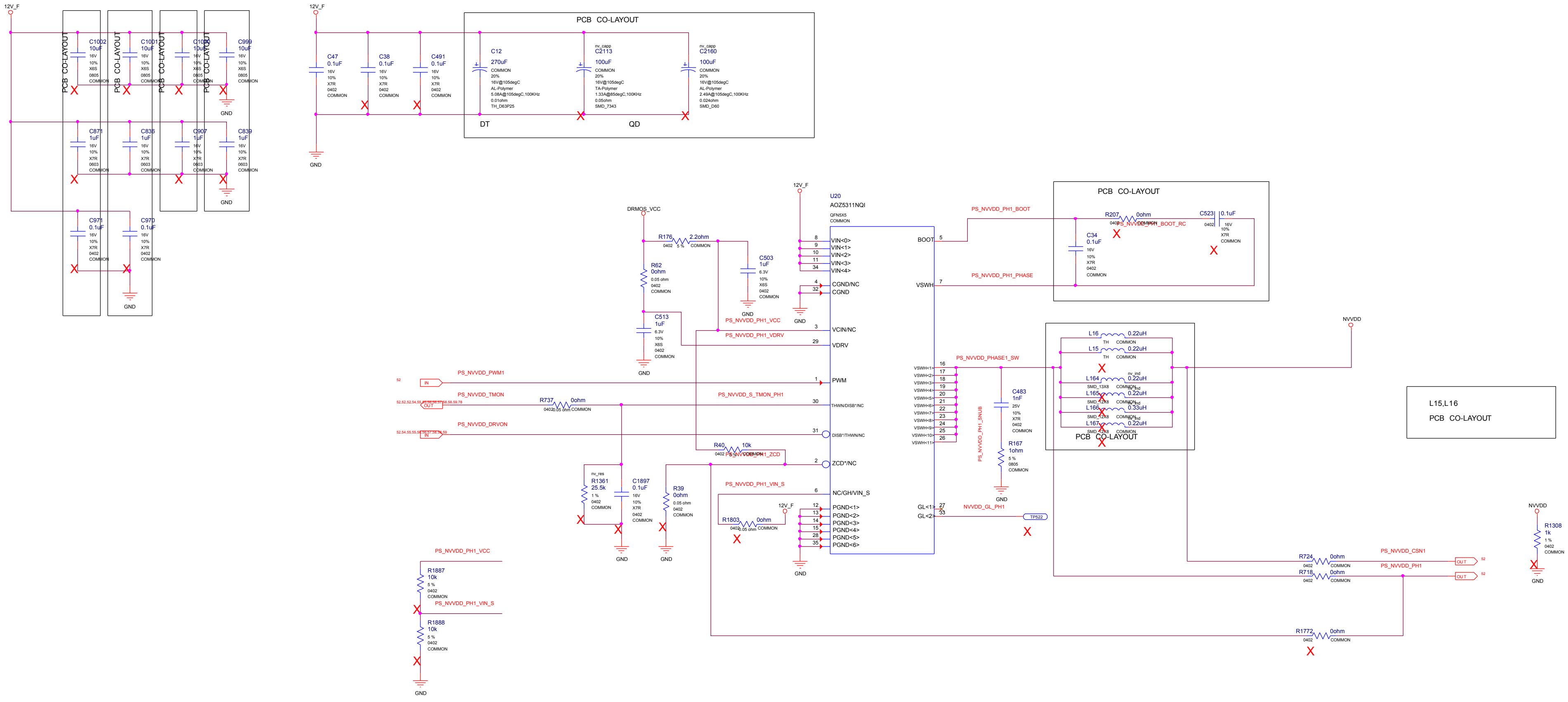
12V_F
PCB CO-LAYOUT
C1002 10uF 16V 10% X6S 0805 COMMON
C1001 10uF 16V 10% X6S 0805 COMMON
C1000 10uF 16V 10% X6S 0805 COMMON
C999 10uF 16V 10% X6S 0805 COMMON
C871 1uF 16V 10% X7R 0603 COMMON
C836 1uF 16V 10% X7R 0603 COMMON
C907 1uF 16V 10% X7R 0603 COMMON
C839 1uF 16V 10% X7R 0603 COMMON
C971 0.1uF 16V 10% X7R 0402 COMMON
C970 0.1uF 16V 10% X7R 0402 COMMON
GND
C47 0.1uF 16V 10% X7R 0402 COMMON
C38 0.1uF 16V 10% X7R 0402 COMMON
C491 0.1uF 16V 10% X7R 0402 COMMON
C12 270uF COMMON 20% 16V@105degC AL-Polymer 5.08A@105degC,100KHz 0.01ohm TH_D63P25
nv_capp C2113 100uF COMMON 20% 16V@105degC TA-Polymer 1.33A@85degC,100KHz 0.05ohm SMD_7343
nv_capp C2160 100uF COMMON 20% 16V@105degC AL-Polymer 2.49A@105degC,100KHz 0.024ohm SMD_D60
DT
QD
DRMOS_VCC
R176 2.2ohm 0402 5 % COMMON
R62 0ohm 0.05 ohm 0402 COMMON
C503 1uF 6.3V 10% X6S 0402 COMMON
C513 1uF 6.3V 10% X6S 0402 COMMON
U20 AOZ5311NQI QFN5X5 COMMON
VIN<0> VIN<1> VIN<2> VIN<3> VIN<4>
CGND/NC CGND
VCIN/NC VDRV PWM THWN/DISB*/NC DISB*/THWN/NC ZCD*/NC NC/GH/VIN_S
PGND<1> PGND<2> PGND<3> PGND<4> PGND<5> PGND<6>
BOOT VSWH
VSWH<1> VSWH<2> VSWH<3> VSWH<4> VSWH<5> VSWH<6> VSWH<7> VSWH<8> VSWH<9> VSWH<10> VSWH<11>
GL<1> GL<2>
PS_NVVDD_PH1_BOOT
PS_NVVDD_PH1_PHASE
PS_NVVDD_PH1_VCC
PS_NVVDD_PH1_VDRV
PS_NVVDD_PWM1
PS_NVVDD_TMON
PS_NVVDD_S_TMON_PH1
PS_NVVDD_DRVON
PS_NVVDD_PH1_ZCD
PS_NVVDD_PH1_VIN_S
PS_NVVDD_PHASE1_SW
PS_NVVDD_PH1_SNUB
PS_NVVDD_PH1_BOOT_RC
NVVDD_GL_PH1
R207 0ohm 0402
C523 0.1uF 0402 16V 10% X7R COMMON
C34 0.1uF 16V 10% X7R 0402 COMMON
L16 0.22uH TH COMMON
L15 0.22uH TH COMMON
L164 0.22uH SMD_13X8 COMMON
L165 0.22uH SMD_12X8 COMMON
L166 0.33uH
L167 0.22uH
nv_ind
C483 1nF 25V 10% X7R 0402 COMMON
R167 1ohm 5 % 0805 COMMON
NVVDD
L15,L16 PCB CO-LAYOUT
R737 0ohm 0402 0.05 ohm COMMON
R40 10k 0402 1 %
nv_res R1361 25.5k 1 % 0402 COMMON
C1897 0.1uF 16V 10% X7R 0402 COMMON
R39 0ohm 0.05 ohm 0402 COMMON
R1803 0ohm 0402 0.05 ohm COMMON
TP522
IN OUT
R724 0ohm 0402 COMMON PS_NVVDD_CSN1
R718 0ohm 0402 COMMON PS_NVVDD_PH1
R1772 0ohm 0402 COMMON
R1308 1k 1 % 0402 COMMON
R1887 10k 5 % 0402 COMMON
R1888 10k 5 % 0402 COMMON

MICRO-STAR INT'L CO.,LTD

MS-V389

Size	Document Description	Rev
Custom	PS: NVVDD Phase 1	1.1

Date: Thursday, July 23, 2020 Sheet 53 of 76

PS: NVVDD Phase 2

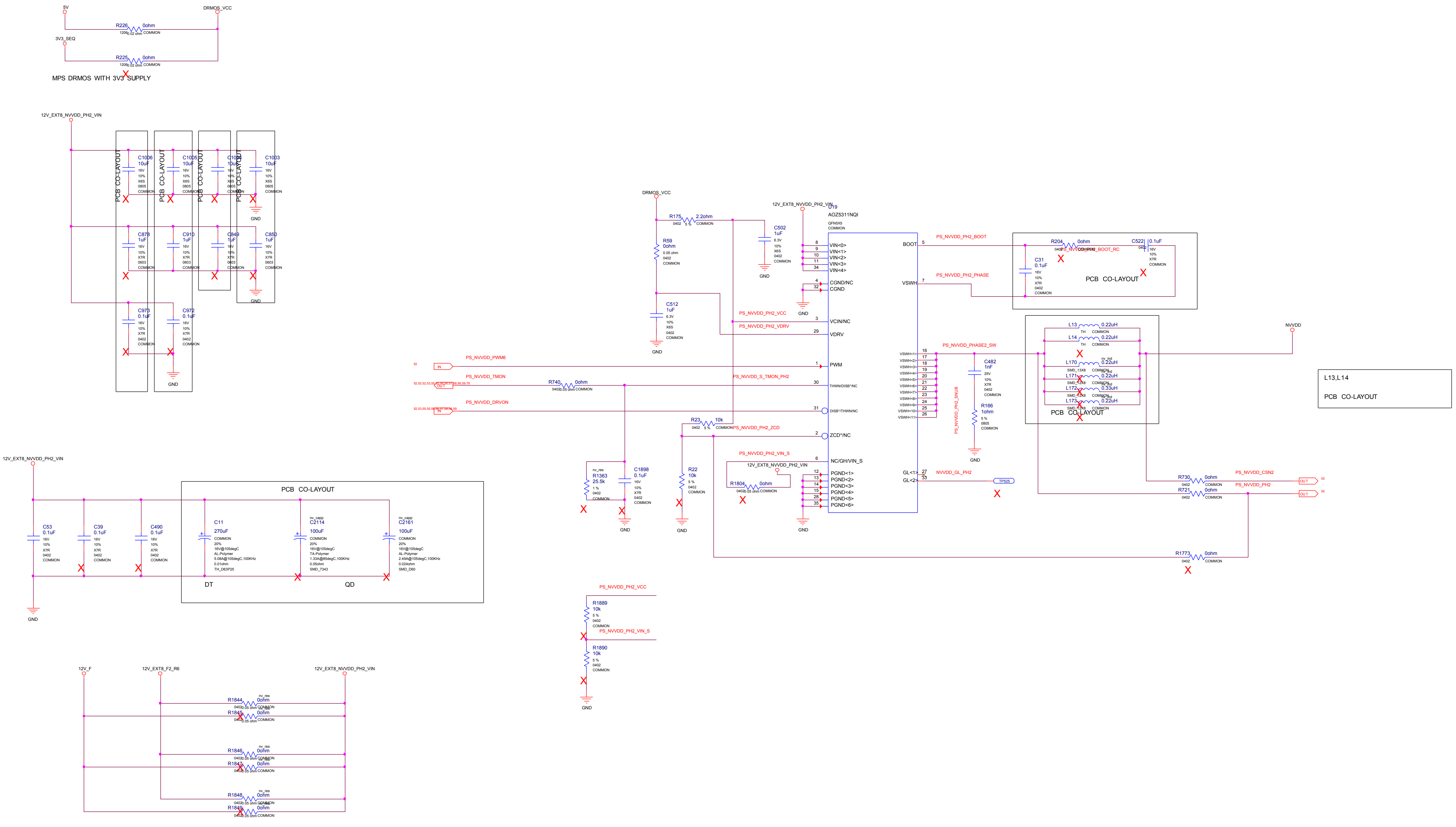
5V
DRMOS_VCC
3V3_SEQ
R226 0ohm
R225 0ohm
MPS DRMOS WITH 3V3 SUPPLY
12V_EXT8_NVVDD_PH2_VIN
PCB CO-LAYOUT
C1006 10uF
C1005 10uF
C1004 10uF
C1003 10uF
C878 1uF
C910 1uF
C849 1uF
C850 1uF
C973 0.1uF
C972 0.1uF
GND
U19
AOZ5311NQI
R175 2.2ohm
C502 1uF
R59 0ohm
C512 1uF
BOOT
VSWH
VIN<0>
VIN<1>
VIN<2>
VIN<3>
VIN<4>
CGND/NC
CGND
VCIN/NC
VDRV
PWM
THWN/DISB*/NC
DISB*/THWN/NC
ZCD*/NC
NC/GH/VIN_S
PGND<1>
PGND<2>
PGND<3>
PGND<4>
PGND<5>
PGND<6>
GL<1>
GL<2>
PS_NVVDD_PH2_BOOT
PS_NVVDD_PH2_PHASE
PS_NVVDD_PH2_VCC
PS_NVVDD_PH2_VDRV
PS_NVVDD_PWM6
PS_NVVDD_TMON
PS_NVVDD_S_TMON_PH2
PS_NVVDD_DRVON
PS_NVVDD_PH2_ZCD
PS_NVVDD_PH2_VIN_S
PS_NVVDD_PHASE2_SW
PS_NVVDD_PH2_SNUB
NVVDD_GL_PH2
TP525
R740 0ohm
R23 10k
R1363 25.5k
C1898 0.1uF
R22 10k
R1804 0ohm
R204 0ohm
C522 0.1uF
C31 0.1uF
PS_NVVDD_PH2_BOOT_RC
L13 0.22uH
L14 0.22uH
L170 0.22uH
L171 0.22uH
L172 0.33uH
L173 0.22uH
C482 1nF
R166 1ohm
NVVDD
L13,L14
PCB CO-LAYOUT
R730 0ohm
R721 0ohm
R1773 0ohm
PS_NVVDD_CSN2
PS_NVVDD_PH2
C53 0.1uF
C39 0.1uF
C490 0.1uF
C11 270uF
C2114 100uF
C2161 100uF
DT
QD
R1889 10k
R1890 10k
12V_F
12V_EXT8_F2_R6
R1844 0ohm
R1845 0ohm
R1846 0ohm
R1847 0ohm
R1848 0ohm
R1849 0ohm

MICRO-STAR INT'L CO.,LTD		
MS-V389		
Size Custom	Document Description PS: NVVDD Phase 2	Rev 1.1
Date: Thursday, July 23, 2020	Sheet 54 of 76	

PS: NVVDD Phase 3 (PWM6), PHASE 4(PWM2)

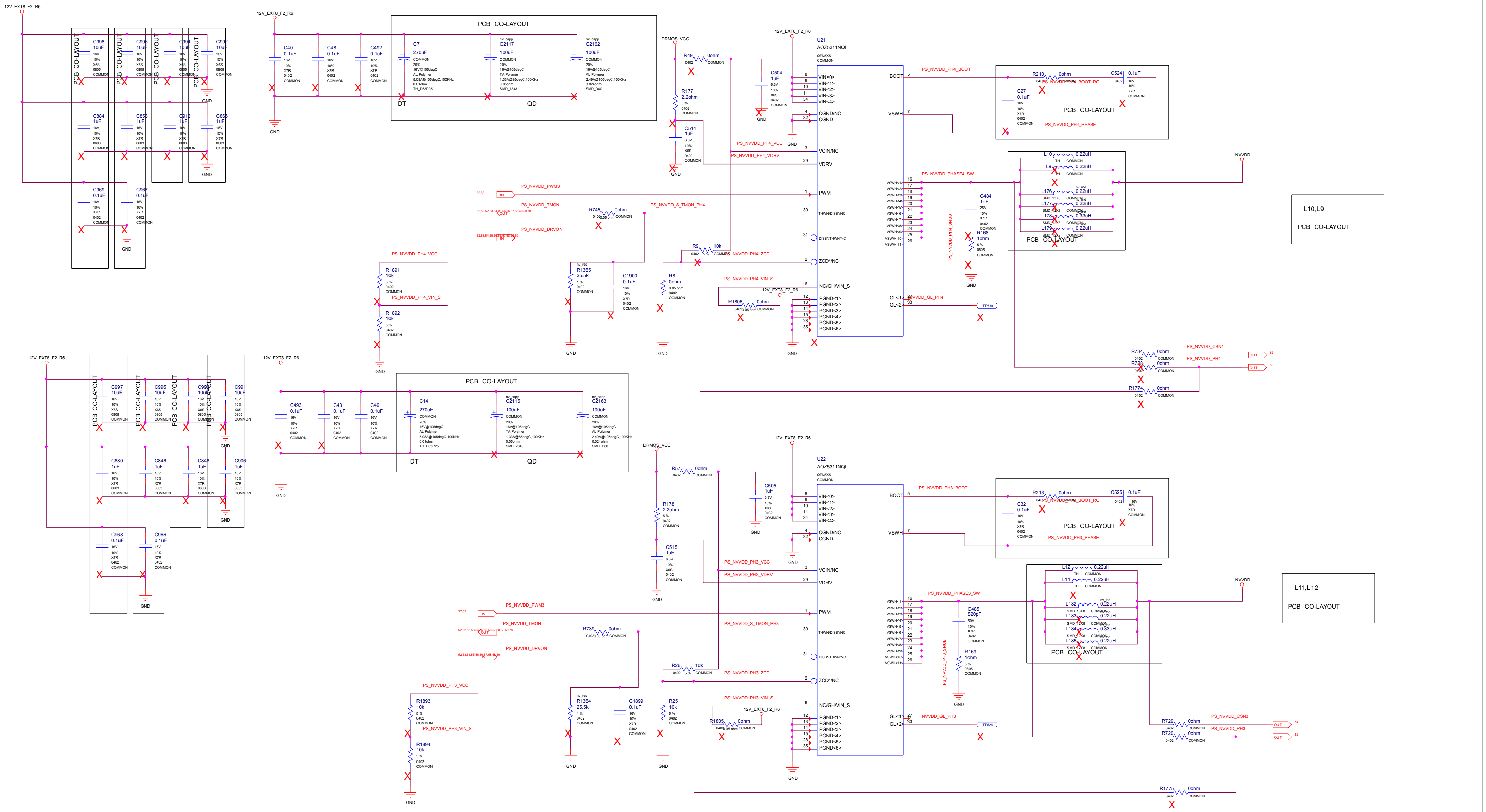
12V_EXT8_F2_R6
PCB CO-LAYOUT
C998 10uF
C996 10uF
C994 10uF
C992 10uF
C884 1uF
C853 1uF
C912 1uF
C868 1uF
C969 0.1uF
C967 0.1uF
GND
C40 0.1uF
C48 0.1uF
C492 0.1uF
C7 270uF
C2117 100uF
C2162 100uF
DT
QD
DRMOS_VCC
R49 0ohm
R177 2.2ohm
C514 1uF
C504 1uF
U21
AOZ5311NQI
VIN<0>
VIN<1>
VIN<2>
VIN<3>
VIN<4>
CGND/NC
CGND
VCIN/NC
VDRV
PWM
THWN/DISB*/NC
DISB*/THWN/NC
ZCD*/NC
NC/GH/VIN_S
PGND<1>
PGND<2>
PGND<3>
PGND<4>
PGND<5>
PGND<6>
BOOT
VSWH
GL<1>
GL<2>
PS_NVVDD_PH4_BOOT
PS_NVVDD_PH4_BOOT_RC
PS_NVVDD_PH4_PHASE
PS_NVVDD_PH4_VCC
PS_NVVDD_PH4_VDRV
PS_NVVDD_PWM3
PS_NVVDD_TMON
PS_NVVDD_S_TMON_PH4
PS_NVVDD_DRVON
PS_NVVDD_PH4_ZCD
PS_NVVDD_PH4_VIN_S
PS_NVVDD_GL_PH4
PS_NVVDD_PHASE4_SW
PS_NVVDD_PH4_SNUB
R210 0ohm
C524 0.1uF
C27 0.1uF
L10 0.22uH
L9 0.22uH
L176 0.22uH
L177 0.22uH
L178 0.33uH
L179 0.22uH
C484 1nF
R168 1ohm
NVVDD
L10,L9
PCB CO-LAYOUT
R745 0ohm
R9 10k
R1891 10k
R1892 10k
R1365 25.5k
C1900 0.1uF
R8 0ohm
R1806 0ohm
TP530
R734 0ohm
R728 0ohm
R1774 0ohm
PS_NVVDD_CSN4
PS_NVVDD_PH4
C997 10uF
C995 10uF
C990 10uF
C991 10uF
C880 1uF
C846 1uF
C848 1uF
C906 1uF
C968 0.1uF
C966 0.1uF
C493 0.1uF
C43 0.1uF
C49 0.1uF
C14 270uF
C2115 100uF
C2163 100uF
R57 0ohm
R178 2.2ohm
C515 1uF
C505 1uF
U22
AOZ5311NQI
PS_NVVDD_PH3_BOOT
PS_NVVDD_PH3_BOOT_RC
PS_NVVDD_PH3_PHASE
PS_NVVDD_PH3_VCC
PS_NVVDD_PH3_VDRV
PS_NVVDD_S_TMON_PH3
PS_NVVDD_PH3_ZCD
PS_NVVDD_PH3_VIN_S
PS_NVVDD_GL_PH3
PS_NVVDD_PHASE3_SW
PS_NVVDD_PH3_SNUB
R213 0ohm
C525 0.1uF
C32 0.1uF
L12 0.22uH
L11 0.22uH
L182 0.22uH
L183 0.22uH
L184 0.33uH
L185 0.22uH
C485 820pF
R169 1ohm
L11,L12
PCB CO-LAYOUT
R739 0ohm
R26 10k
R1893 10k
R1894 10k
R1364 25.5k
C1899 0.1uF
R25 10k
R1805 0ohm
TP524
R729 0ohm
R720 0ohm
R1775 0ohm
PS_NVVDD_CSN3
PS_NVVDD_PH3
IN
OUT

MICRO-STAR INT'L CO.,LTD

MS-V389

Size	Document Description	Rev
Custom	PS: NVVDD Phase 3 (PWM6), PHASE 4(PWM2)	1.1

Date: Thursday, July 23, 2020 Sheet 55 of 76

PS: NVVDD PH 5(PWM2), PH7(PWM3)

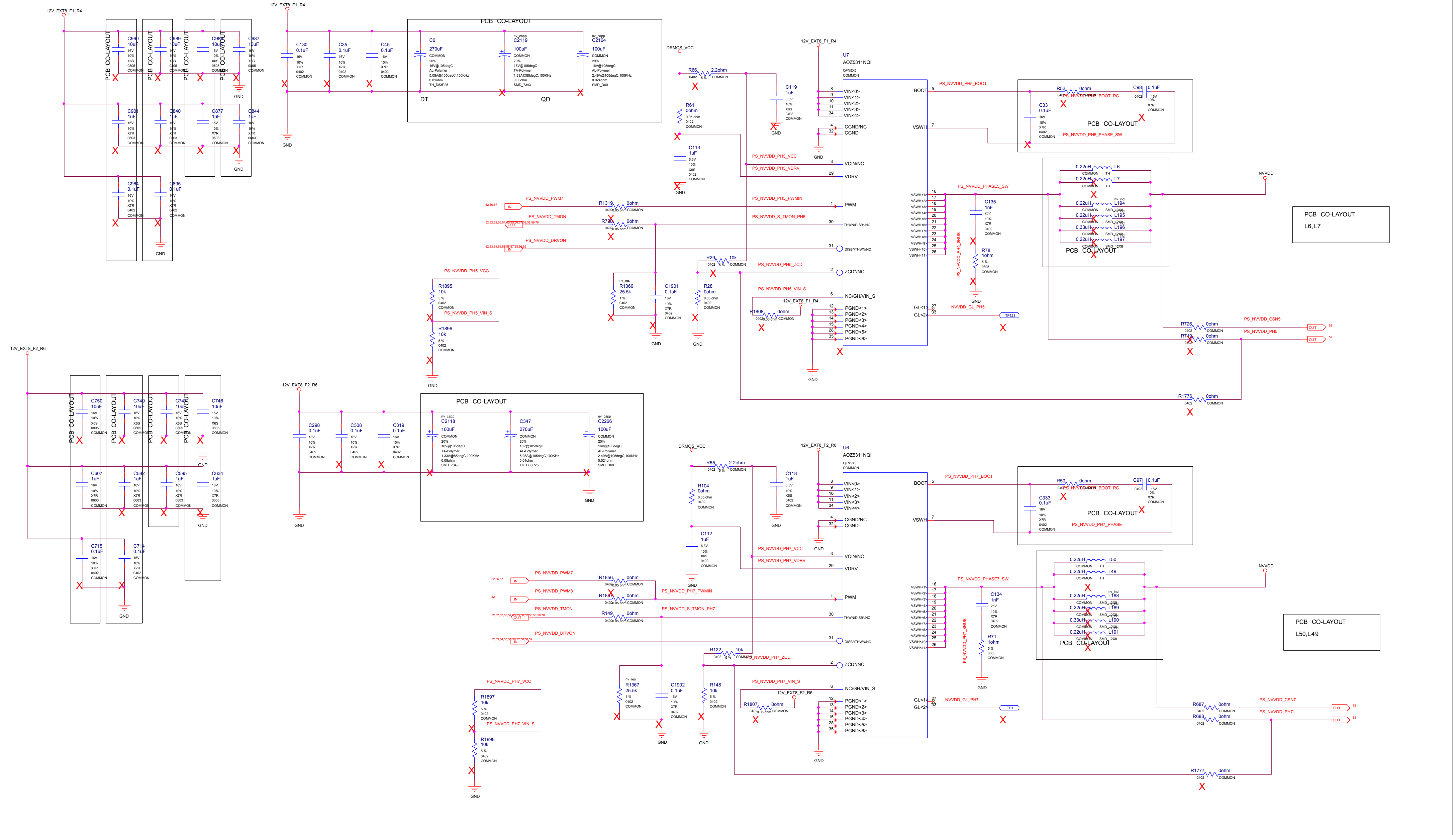
12V_EXT8_F1_R4
PCB CO-LAYOUT
C990 10uF
C989 10uF
C988 10uF
C987 10uF
C901 1uF
C840 1uF
C877 1uF
C844 1uF
C964 0.1uF
C895 0.1uF
C130 0.1uF
C35 0.1uF
C45 0.1uF
C6 270uF
C2119 100uF
C2164 100uF
DT
QD
DRMOS_VCC
R66 2.2ohm
R61 0ohm
C113 1uF
C119 1uF
U7
AOZ5311NQI
QFN5X5
VIN<0>
VIN<1>
VIN<2>
VIN<3>
VIN<4>
CGND/NC
CGND
VCIN/NC
VDRV
PWM
THWN/DISB*/NC
DISB*/THWN/NC
ZCD*/NC
NC/GH/VIN_S
PGND<1>
PGND<2>
PGND<3>
PGND<4>
PGND<5>
PGND<6>
BOOT
VSWH
GL<1>
GL<2>
PS_NVVDD_PH5_BOOT
PS_NVVDD_PH5_BOOT_RC
PS_NVVDD_PH5_PHASE_SW
PS_NVVDD_PH5_VCC
PS_NVVDD_PH5_VDRV
PS_NVVDD_PH5_PWMIN
PS_NVVDD_S_TMON_PH5
PS_NVVDD_PH5_ZCD
PS_NVVDD_PH5_VIN_S
PS_NVVDD_PWM7
PS_NVVDD_TMON
PS_NVVDD_DRVON
PS_NVVDD_PHASE5_SW
PS_NVVDD_PH5_SNUB
NVVDD_GL_PH5
PS_NVVDD_CSN5
PS_NVVDD_PH5
R52 0ohm
C98 0.1uF
C33 0.1uF
R1319 0ohm
R720 0ohm
R29 10k
R1366 25.5k
C1901 0.1uF
R28 0ohm
R1895 10k
R1896 10k
R1808 0ohm
C135 1nF
R78 1ohm
L6 0.22uH
L7 0.22uH
L194 0.22uH
L195 0.22uH
L196 0.33uH
L197 0.22uH
R726 0ohm
R719 0ohm
R1776 0ohm
TP523
NVVDD
PCB CO-LAYOUT L6,L7
12V_EXT8_F2_R6
C750 10uF
C749 10uF
C747 10uF
C746 10uF
C607 1uF
C582 1uF
C595 1uF
C634 1uF
C715 0.1uF
C714 0.1uF
C298 0.1uF
C308 0.1uF
C319 0.1uF
C2118 100uF
C347 270uF
C2266 100uF
R65 2.2ohm
R104 0ohm
C112 1uF
C118 1uF
U6
AOZ5311NQI
PS_NVVDD_PH7_BOOT
PS_NVVDD_PH7_BOOT_RC
PS_NVVDD_PH7_PHASE
PS_NVVDD_PH7_VCC
PS_NVVDD_PH7_VDRV
PS_NVVDD_PH7_PWMIN
PS_NVVDD_S_TMON_PH7
PS_NVVDD_PH7_ZCD
PS_NVVDD_PH7_VIN_S
PS_NVVDD_PWM8
PS_NVVDD_PHASE7_SW
PS_NVVDD_PH7_SNUB
NVVDD_GL_PH7
PS_NVVDD_CSN7
PS_NVVDD_PH7
R50 0ohm
C97 0.1uF
C333 0.1uF
R1856 0ohm
R1857 0ohm
R149 0ohm
R122 10k
R1367 25.5k
C1902 0.1uF
R148 10k
R1897 10k
R1898 10k
R1807 0ohm
C134 1nF
R71 1ohm
L50 0.22uH
L49 0.22uH
L188 0.22uH
L189 0.22uH
L190 0.33uH
L191 0.22uH
R687 0ohm
R688 0ohm
R1777 0ohm
TP1
PCB CO-LAYOUT L50,L49
GND

MICRO-STAR INT'L CO.,LTD

MS-V389

Size	Document Description	Rev
Custom	PS: NVVDD PH 5(PWM2), PH7(PWM3)	1.1

Date: Thursday, July 23, 2020 Sheet 56 of 76

PS: NVVDD Phase 6(PWM7)

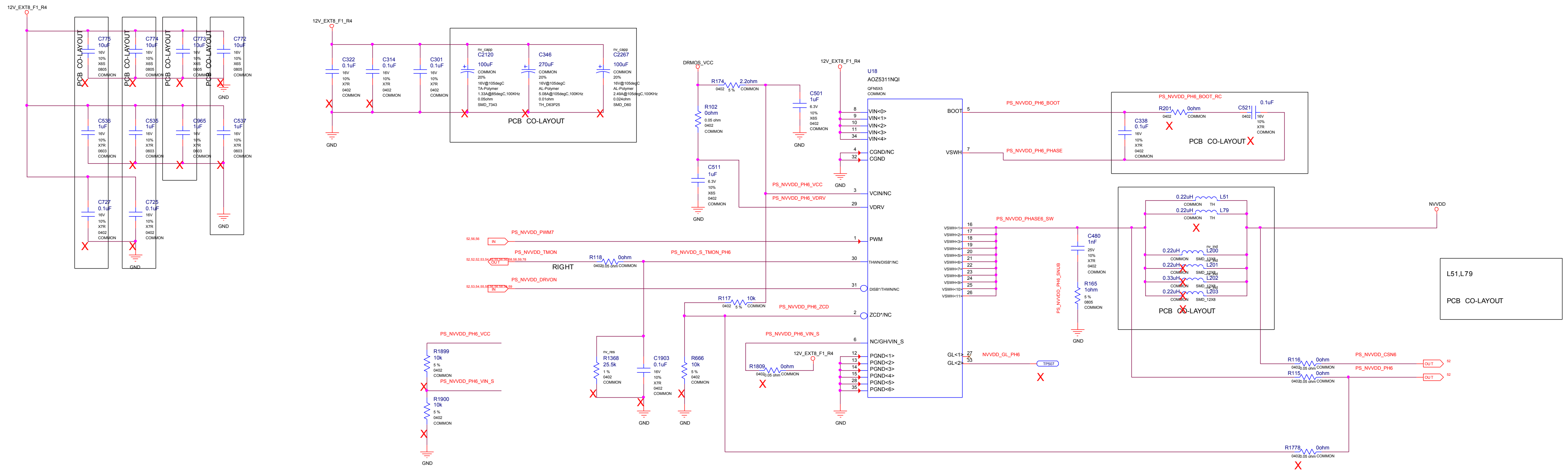
12V_EXT8_F1_R4
PCB CO-LAYOUT
C775 10uF 16V 10% X6S 0805 COMMON
C774 10uF 16V 10% X6S 0805 COMMON
C773 10uF 16V 10% X6S 0805 COMMON
C772 10uF 16V 10% X6S 0805 COMMON
C536 1uF 16V 10% X7R 0603 COMMON
C535 1uF 16V 10% X7R 0603 COMMON
C965 1uF 16V 10% X7R 0603 COMMON
C537 1uF 16V 10% X7R 0603 COMMON
C727 0.1uF 16V 10% X7R 0402 COMMON
C725 0.1uF 16V 10% X7R 0402 COMMON
GND
C322 0.1uF 16V 10% X7R 0402 COMMON
C314 0.1uF 16V 10% X7R 0402 COMMON
C301 0.1uF 16V 10% X7R 0402 COMMON
nv_capp C2120 100uF COMMON 20% 16V@105degC TA-Polymer 1.33A@85degC,100KHz 0.05ohm SMD_7343
C346 270uF COMMON 20% 16V@105degC AL-Polymer 5.08A@105degC,100KHz 0.01ohm TH_D63P25
nv_capp C2267 100uF COMMON 20% 16V@105degC AL-Polymer 2.49A@105degC,100KHz 0.024ohm SMD_D60
DRMOS_VCC
R174 2.2ohm 0402 5 % COMMON
R102 0ohm 0.05 ohm 0402 COMMON
C511 1uF 6.3V 10% X6S 0402 COMMON
C501 1uF 6.3V 10% X6S 0402 COMMON
U18 AOZ5311NQI QFN5X5 COMMON
VIN<0> VIN<1> VIN<2> VIN<3> VIN<4>
CGND/NC CGND
VCIN/NC VDRV PWM THWN/DISB*/NC DISB*/THWN/NC ZCD*/NC NC/GH/VIN_S
PGND<1> PGND<2> PGND<3> PGND<4> PGND<5> PGND<6>
BOOT VSWH
VSWH<1> … VSWH<11>
GL<1> GL<2>
PS_NVVDD_PH6_VCC
PS_NVVDD_PH6_VDRV
PS_NVVDD_PWM7
PS_NVVDD_TMON
PS_NVVDD_S_TMON_PH6
PS_NVVDD_DRVON
RIGHT
R118 0ohm 0402 0.05 ohm COMMON
R117 10k 0402 5 % COMMON
PS_NVVDD_PH6_ZCD
PS_NVVDD_PH6_VIN_S
R1809 0ohm 0402 0.05 ohm COMMON
R1899 10k 5 % 0402 COMMON
R1900 10k 5 % 0402 COMMON
nv_res R1368 25.5k 1 % 0402 COMMON
C1903 0.1uF 16V 10% X7R 0402 COMMON
R666 10k 5 % 0402 COMMON
PS_NVVDD_PH6_BOOT
PS_NVVDD_PH6_BOOT_RC
R201 0ohm 0402 COMMON
C521 0.1uF 0402 16V 10% X7R COMMON
C338 0.1uF 16V 10% X7R 0402 COMMON
PS_NVVDD_PH6_PHASE
PS_NVVDD_PHASE6_SW
C480 1nF 25V 10% X7R 0402 COMMON
R165 1ohm 5 % 0805 COMMON
PS_NVVDD_PH6_SNUB
0.22uH L51 COMMON TH
0.22uH L79 COMMON TH
nv_ind 0.22uH L200 COMMON SMD_13X8
nv_ind 0.22uH L201 COMMON SMD_12X8
nv_ind 0.33uH L202 COMMON SMD_12X8
nv_ind 0.22uH L203 COMMON SMD_12X8
NVVDD
NVVDD_GL_PH6
TP507
R116 0ohm 0402 0.05 ohm COMMON
R115 0ohm 0402 0.05 ohm COMMON
R1778 0ohm 0402 0.05 ohm COMMON
PS_NVVDD_CSN6
PS_NVVDD_PH6
IN OUT
L51,L79
PCB CO-LAYOUT

MICRO-STAR INT'L CO.,LTD		
MS-V389		
Size Custom	Document Description PS: NVVDD Phase 6(PWM7)	Rev 1.1
Date: Thursday, July 23, 2020	Sheet 57 of 76	

PS: NVVDD PH 8 (PWM5), PH 9(PWM8)

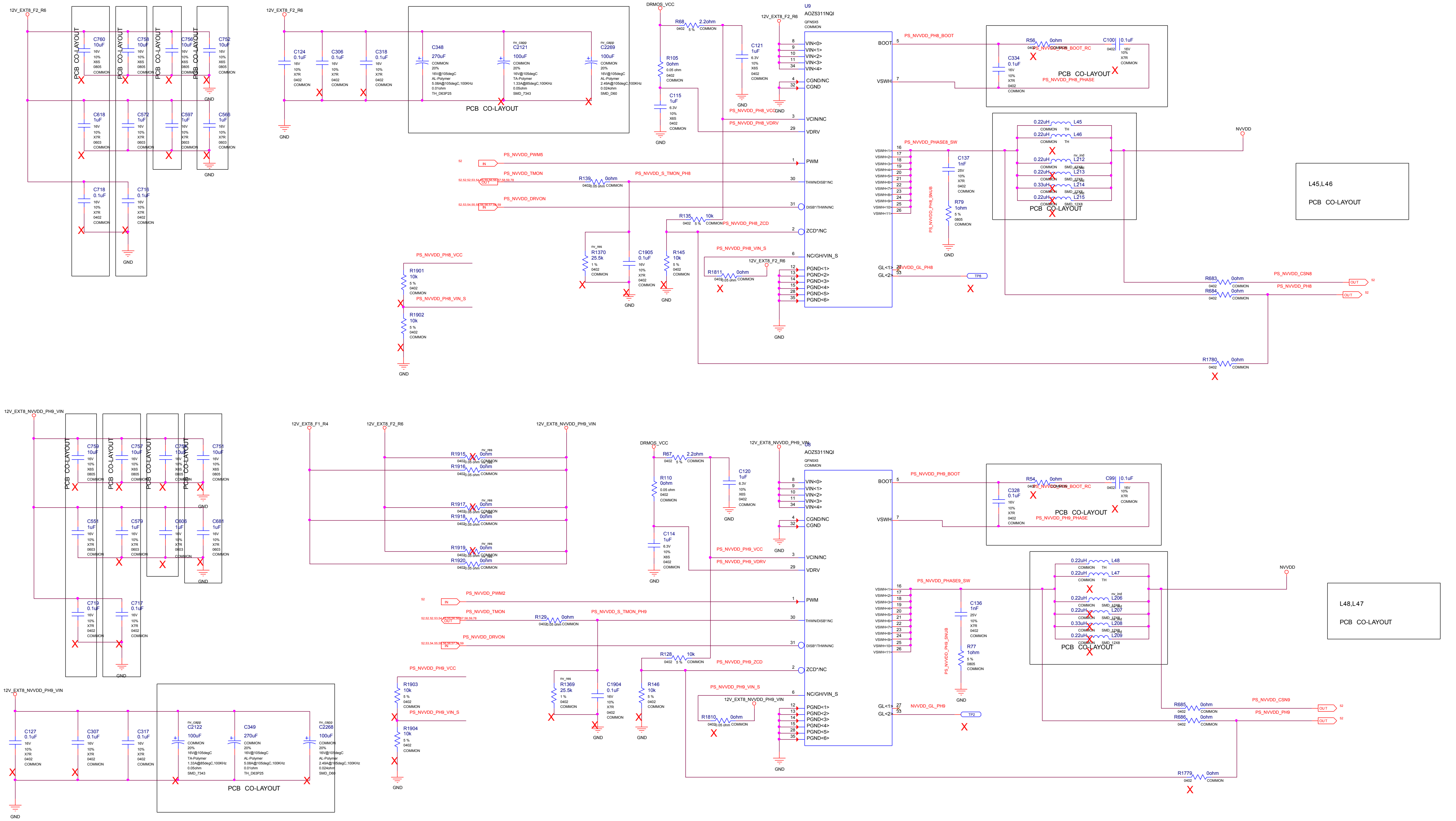
12V_EXT8_F2_R6
PCB CO-LAYOUT
C760 10uF
C758 10uF
C756 10uF
C752 10uF
C618 1uF
C572 1uF
C597 1uF
C566 1uF
C718 0.1uF
C716 0.1uF
GND
C124 0.1uF
C306 0.1uF
C318 0.1uF
C348 270uF
C2121 100uF
C2269 100uF
DRMOS_VCC
R68 2.2ohm
R105 0ohm
C115 1uF
C121 1uF
U9
AOZ5311NQI
QFN5X5
VIN<0>
VIN<1>
VIN<2>
VIN<3>
VIN<4>
CGND/NC
CGND
VCIN/NC
VDRV
PWM
THWN/DISB*/NC
DISB*/THWN/NC
ZCD*/NC
NC/GH/VIN_S
PGND<1>
PGND<2>
PGND<3>
PGND<4>
PGND<5>
PGND<6>
BOOT
VSWH
GL<1>
GL<2>
PS_NVVDD_PH8_BOOT
PS_NVVDD_PH8_PHASE
PS_NVVDD_PH8_BOOT_RC
R56 0ohm
C100 0.1uF
C334 0.1uF
PS_NVVDD_PHASE8_SW
C137 1nF
R79 1ohm
PS_NVVDD_PH8_SNUB
L45 0.22uH
L46 0.22uH
L212 0.22uH
L213 0.22uH
L214 0.33uH
L215 0.22uH
NVVDD
L45,L46
PCB CO-LAYOUT
PS_NVVDD_PWM5
PS_NVVDD_TMON
PS_NVVDD_S_TMON_PH8
PS_NVVDD_DRVON
R139 0ohm
R135 10k
PS_NVVDD_PH8_ZCD
R1370 25.5k
C1905 0.1uF
R145 10k
PS_NVVDD_PH8_VCC
PS_NVVDD_PH8_VDRV
PS_NVVDD_PH8_VIN_S
R1811 0ohm
R1901 10k
R1902 10k
NVVDD_GL_PH8
TP8
R683 0ohm
R684 0ohm
PS_NVVDD_CSN8
PS_NVVDD_PH8
R1780 0ohm
12V_EXT8_NVVDD_PH9_VIN
C759 10uF
C757 10uF
C755 10uF
C751 10uF
C551 1uF
C579 1uF
C606 1uF
C681 1uF
C719 0.1uF
C717 0.1uF
12V_EXT8_F1_R4
R1915 0ohm
R1916 0ohm
R1917 0ohm
R1918 0ohm
R1919 0ohm
R1920 0ohm
R67 2.2ohm
R110 0ohm
C114 1uF
C120 1uF
U8
AOZ5311NQI
PS_NVVDD_PH9_BOOT
PS_NVVDD_PH9_PHASE
PS_NVVDD_PH9_BOOT_RC
R54 0ohm
C99 0.1uF
C328 0.1uF
PS_NVVDD_PHASE9_SW
C136 1nF
R77 1ohm
PS_NVVDD_PH9_SNUB
L48 0.22uH
L47 0.22uH
L206 0.22uH
L207 0.22uH
L208 0.33uH
L209 0.22uH
L48,L47
PCB CO-LAYOUT
PS_NVVDD_PWM2
PS_NVVDD_S_TMON_PH9
R129 0ohm
R128 10k
PS_NVVDD_PH9_ZCD
R1369 25.5k
C1904 0.1uF
R146 10k
PS_NVVDD_PH9_VCC
PS_NVVDD_PH9_VDRV
PS_NVVDD_PH9_VIN_S
R1810 0ohm
R1903 10k
R1904 10k
NVVDD_GL_PH9
TP2
R685 0ohm
R686 0ohm
PS_NVVDD_CSN9
PS_NVVDD_PH9
R1779 0ohm
C127 0.1uF
C307 0.1uF
C317 0.1uF
C2122 100uF
C349 270uF
C2268 100uF

MICRO-STAR INT'L CO.,LTD

MS-V389

Size	Document Description	Rev
Custom	PS: NVVDD PH 8 (PWM5), PH 9(PWM8)	1.1

Date: Thursday, July 23, 2020 Sheet 58 of 76

PS: NVVDD Phase 10 (PWM8)

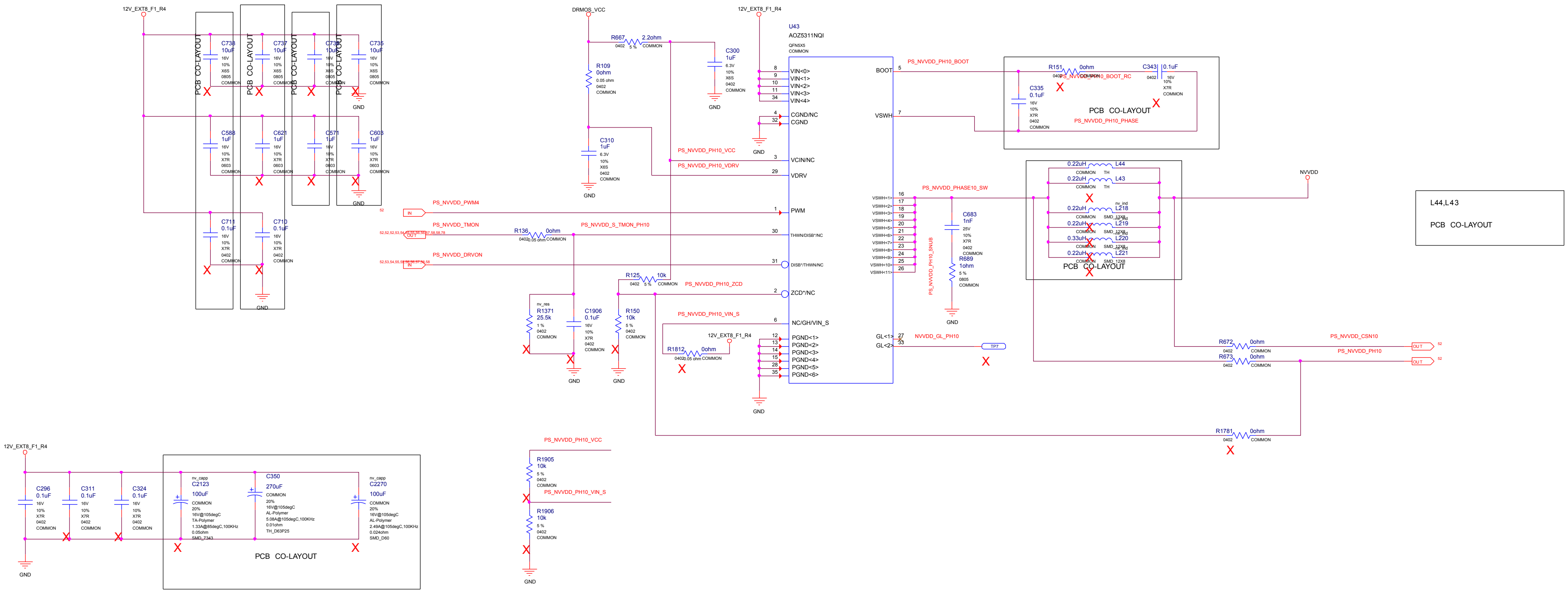
12V_EXT8_F1_R4
PCB CO-LAYOUT
C738 10uF 16V 10% X6S 0805 COMMON
C737 10uF 16V 10% X6S 0805 COMMON
C736 10uF 16V 10% X6S 0805 COMMON
C735 10uF 16V 10% X6S 0805 COMMON
C588 1uF 16V 10% X7R 0603 COMMON
C621 1uF 16V 10% X7R 0603 COMMON
C571 1uF 16V 10% X7R 0603 COMMON
C603 1uF 16V 10% X7R 0603 COMMON
C711 0.1uF 16V 10% X7R 0402 COMMON
C710 0.1uF 16V 10% X7R 0402 COMMON
GND
DRMOS_VCC
R667 2.2ohm 0402 5 % COMMON
R109 0ohm 0.05 ohm 0402 COMMON
C300 1uF 6.3V 10% X6S 0402 COMMON
C310 1uF 6.3V 10% X6S 0402 COMMON
U43
AOZ5311NQI
QFN5X5
COMMON
VIN<0> VIN<1> VIN<2> VIN<3> VIN<4>
CGND/NC
CGND
VCIN/NC
VDRV
PWM
THWN/DISB*/NC
DISB*/THWN/NC
ZCD*/NC
NC/GH/VIN_S
PGND<1> PGND<2> PGND<3> PGND<4> PGND<5> PGND<6>
BOOT
VSWH
VSWH<1> … VSWH<11>
GL<1>
GL<2>
PS_NVVDD_PH10_BOOT
PS_NVVDD_PH10_VCC
PS_NVVDD_PH10_VDRV
PS_NVVDD_PWM4
PS_NVVDD_TMON
PS_NVVDD_S_TMON_PH10
PS_NVVDD_DRVON
PS_NVVDD_PH10_ZCD
PS_NVVDD_PH10_VIN_S
PS_NVVDD_PHASE10_SW
PS_NVVDD_PH10_SNUB
NVVDD_GL_PH10
TP7
IN
OUT
R136 0ohm 0402 0.05 ohm COMMON
R125 10k 0402 5 % COMMON
R1371 25.5k 1 % 0402 COMMON nv_res
C1906 0.1uF 16V 10% X7R 0402 COMMON
R150 10k 5 % 0402 COMMON
R1812 0ohm 0402 0.05 ohm COMMON
R151 0ohm 0402
C343 0.1uF 16V 10% X7R 0402 COMMON
C335 0.1uF 16V 10% X7R 0402 COMMON
PS_NVVDD_PH10_BOOT_RC
PS_NVVDD_PH10_PHASE
C683 1nF 25V 10% X7R 0402 COMMON
R689 1ohm 5 % 0805 COMMON
0.22uH L44 COMMON TH
0.22uH L43 COMMON TH
0.22uH L218 COMMON SMD_12X8 nv_ind
0.22uH L219 COMMON SMD_12X8
0.33uH L220 COMMON SMD_12X8
0.22uH L221 COMMON SMD_12X8
NVVDD
L44,L43
R672 0ohm 0402 COMMON
R673 0ohm 0402 COMMON
R1781 0ohm 0402 COMMON
PS_NVVDD_CSN10
PS_NVVDD_PH10
C296 0.1uF 16V 10% X7R 0402 COMMON
C311 0.1uF 16V 10% X7R 0402 COMMON
C324 0.1uF 16V 10% X7R 0402 COMMON
nv_capp C2123 100uF COMMON 20% 16V@105degC TA-Polymer 1.33A@85degC,100KHz 0.05ohm SMD_7343
C350 270uF COMMON 20% 16V@105degC AL-Polymer 5.08A@105degC,100KHz 0.01ohm TH_D63P25
nv_capp C2270 100uF COMMON 20% 16V@105degC AL-Polymer 2.49A@105degC,100KHz 0.024ohm SMD_D60
R1905 10k 5 % 0402 COMMON
R1906 10k 5 % 0402 COMMON

MICRO-STAR INT'L CO.,LTD

MS-V389

Size	Document Description	Rev
Custom	PS: NVVDD Phase 10 (PWM8)	1.1

Date: Thursday, July 23, 2020 Sheet 59 of 76

PCB CO-LAYOUT

C131, C132, C133, C140, C141, C142, C2106, C2107, C2133, C2134, C2135, C2137, C264, C265, C266, C267, C61, C64, C65, C66, C67, C68, C69, C77, C80, C83, C88

PCB CO-LAYOUT

C103, C105, C106, C107, C108, C110, C1208, C125, C1254, C1256, C1267, C128, C144, C145, C146, C151, C152, C153, C154, C159, C160, C161, C162, C170, C173, C2092, C2100, C2101, C2102, C2103, C2104,
C2138, C2139, C2140, C2141, C2142, C2143, C2144, C2272, C230, C231, C232, C233, C243, C245, C246, C248, C253, C254, C255, C256, C270, C274, C275, C276, C283, C289, C290, C291, C60202, C62004, C62005

C163, C164, C166, C167, C2087, C2105, C2109, C2110, C2111, C224, C225, C261, C268, C269, C60354, C61428, C62, C63, C89, C91, C96

PCB CO-LAYOUT

2020_06_17

1.Fix J1,J2 to reverse 8 pins

2.Change L238,L52,L53 footprint

PS: NVVDD OUTPUT CAP(TOP)

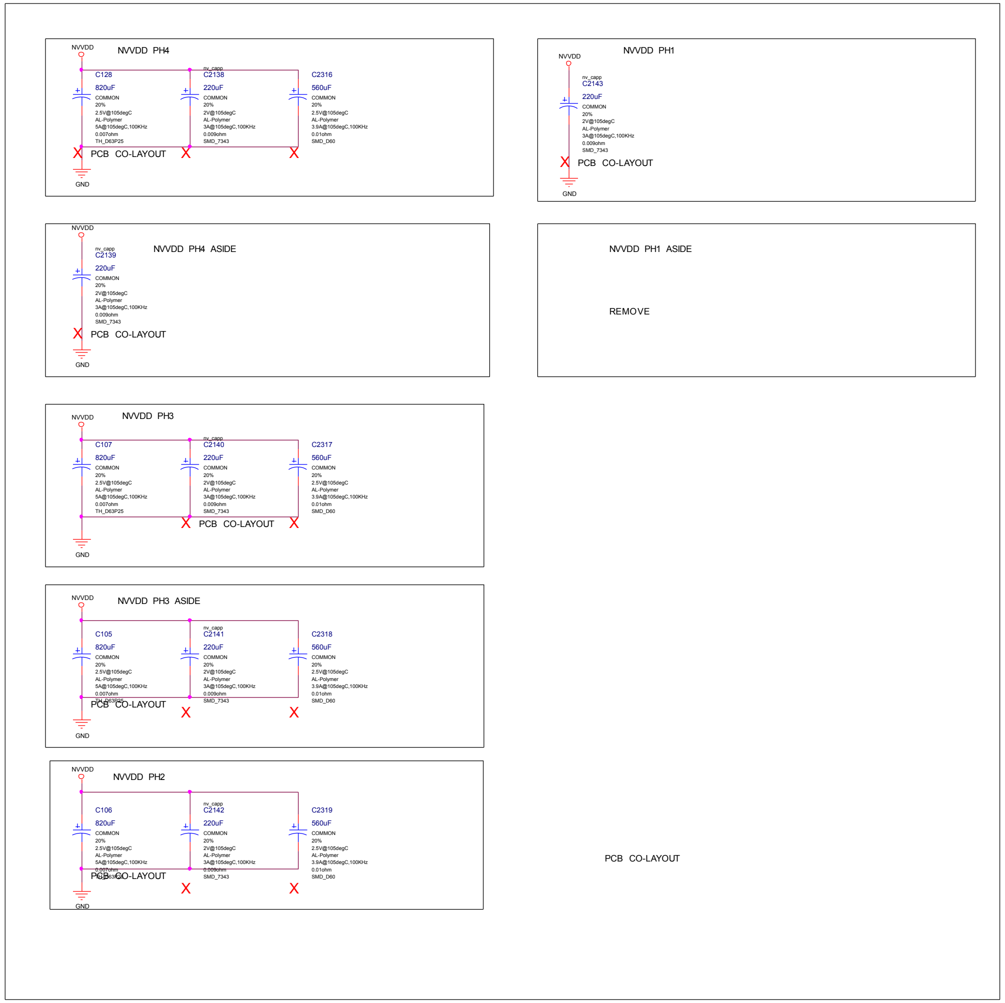
NVVDD PH4
NVVDD
C128
820uF
COMMON
20%
2.5V@105degC
AL-Polymer
5A@105degC,100KHz
0.007ohm
TH_D63P25
nv_capp
C2138
220uF
COMMON
20%
2V@105degC
AL-Polymer
3A@105degC,100KHz
0.009ohm
SMD_7343
C2316
560uF
COMMON
20%
2.5V@105degC
AL-Polymer
3.9A@105degC,100KHz
0.01ohm
SMD_D60
PCB CO-LAYOUT
GND
NVVDD PH1
NVVDD
nv_capp
C2143
220uF
COMMON
20%
2V@105degC
AL-Polymer
3A@105degC,100KHz
0.009ohm
SMD_7343
PCB CO-LAYOUT
GND
NVVDD PH4 ASIDE
NVVDD
nv_capp
C2139
220uF
COMMON
20%
2V@105degC
AL-Polymer
3A@105degC,100KHz
0.009ohm
SMD_7343
PCB CO-LAYOUT
GND
NVVDD PH1 ASIDE
REMOVE
NVVDD PH3
NVVDD
C107
820uF
COMMON
20%
2.5V@105degC
AL-Polymer
5A@105degC,100KHz
0.007ohm
TH_D63P25
nv_capp
C2140
220uF
COMMON
20%
2V@105degC
AL-Polymer
3A@105degC,100KHz
0.009ohm
SMD_7343
C2317
560uF
COMMON
20%
2.5V@105degC
AL-Polymer
3.9A@105degC,100KHz
0.01ohm
SMD_D60
PCB CO-LAYOUT
GND
NVVDD PH3 ASIDE
NVVDD
C105
820uF
COMMON
20%
2.5V@105degC
AL-Polymer
5A@105degC,100KHz
0.007ohm
TH_D63P25
nv_capp
C2141
220uF
COMMON
20%
2V@105degC
AL-Polymer
3A@105degC,100KHz
0.009ohm
SMD_7343
C2318
560uF
COMMON
20%
2.5V@105degC
AL-Polymer
3.9A@105degC,100KHz
0.01ohm
SMD_D60
PCB CO-LAYOUT
GND
NVVDD PH2
NVVDD
C106
820uF
COMMON
20%
2.5V@105degC
AL-Polymer
5A@105degC,100KHz
0.007ohm
TH_D63P25
nv_capp
C2142
220uF
COMMON
20%
2V@105degC
AL-Polymer
3A@105degC,100KHz
0.009ohm
SMD_7343
C2319
560uF
COMMON
20%
2.5V@105degC
AL-Polymer
3.9A@105degC,100KHz
0.01ohm
SMD_D60
PCB CO-LAYOUT
GND
PCB CO-LAYOUT

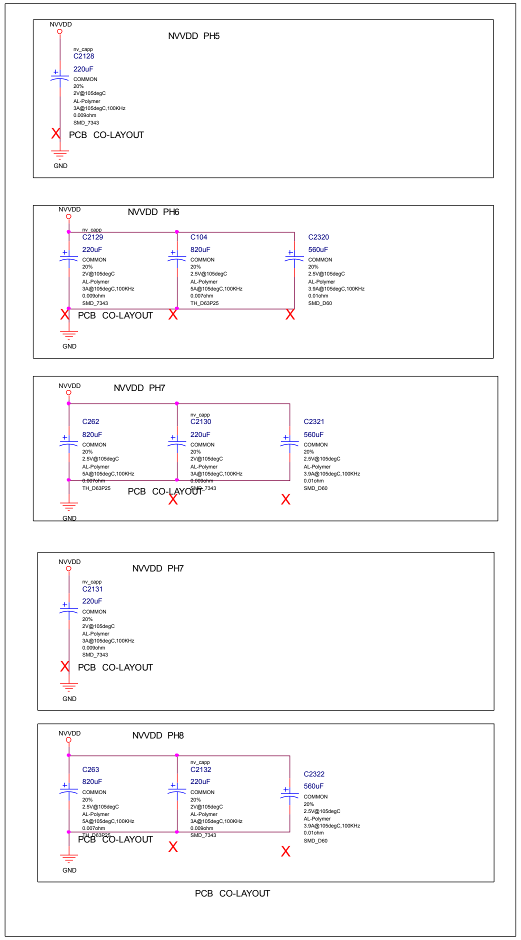
NVVDD PH5
NVVDD
nv_capp
C2128
220uF
COMMON
20%
2V@105degC
AL-Polymer
3A@105degC,100KHz
0.009ohm
SMD_7343
PCB CO-LAYOUT
GND
NVVDD PH6
NVVDD
nv_capp
C2129
220uF
COMMON
20%
2V@105degC
AL-Polymer
3A@105degC,100KHz
0.009ohm
SMD_7343
C104
820uF
COMMON
20%
2.5V@105degC
AL-Polymer
5A@105degC,100KHz
0.007ohm
TH_D63P25
C2320
560uF
COMMON
20%
2.5V@105degC
AL-Polymer
3.9A@105degC,100KHz
0.01ohm
SMD_D60
PCB CO-LAYOUT
GND
NVVDD PH7
NVVDD
C262
820uF
COMMON
20%
2.5V@105degC
AL-Polymer
5A@105degC,100KHz
0.007ohm
TH_D63P25
nv_capp
C2130
220uF
COMMON
20%
2V@105degC
AL-Polymer
3A@105degC,100KHz
0.009ohm
SMD_7343
C2321
560uF
COMMON
20%
2.5V@105degC
AL-Polymer
3.9A@105degC,100KHz
0.01ohm
SMD_D60
PCB CO-LAYOUT
GND
NVVDD PH7
NVVDD
nv_capp
C2131
220uF
COMMON
20%
2V@105degC
AL-Polymer
3A@105degC,100KHz
0.009ohm
SMD_7343
PCB CO-LAYOUT
GND
NVVDD PH8
NVVDD
C263
820uF
COMMON
20%
2.5V@105degC
AL-Polymer
5A@105degC,100KHz
0.007ohm
TH_D63P25
nv_capp
C2132
220uF
COMMON
20%
2V@105degC
AL-Polymer
3A@105degC,100KHz
0.009ohm
SMD_7343
C2322
560uF
COMMON
20%
2.5V@105degC
AL-Polymer
3.9A@105degC,100KHz
0.01ohm
SMD_D60
PCB CO-LAYOUT
GND
PCB CO-LAYOUT

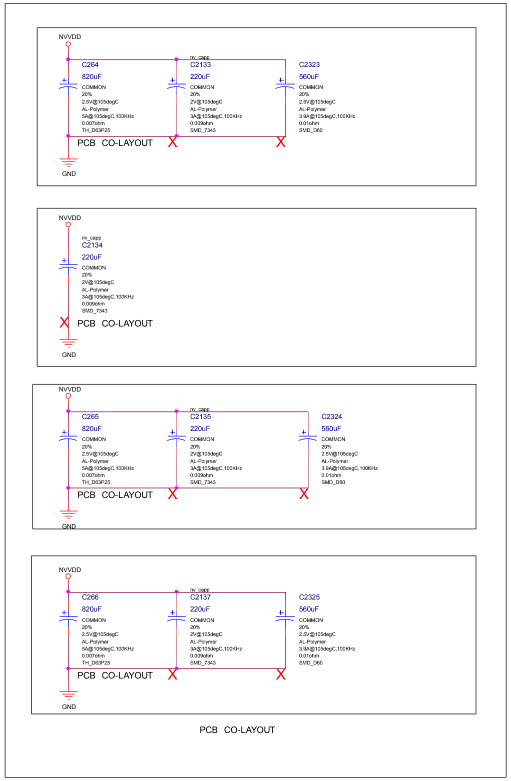
NVVDD
C264
820uF
COMMON
20%
2.5V@105degC
AL-Polymer
5A@105degC,100KHz
0.007ohm
TH_D63P25
nv_capp
C2133
220uF
COMMON
20%
2V@105degC
AL-Polymer
3A@105degC,100KHz
0.009ohm
SMD_7343
C2323
560uF
COMMON
20%
2.5V@105degC
AL-Polymer
3.9A@105degC,100KHz
0.01ohm
SMD_D60
PCB CO-LAYOUT
GND
NVVDD
nv_capp
C2134
220uF
COMMON
20%
2V@105degC
AL-Polymer
3A@105degC,100KHz
0.009ohm
SMD_7343
PCB CO-LAYOUT
GND
NVVDD
C265
820uF
COMMON
20%
2.5V@105degC
AL-Polymer
5A@105degC,100KHz
0.007ohm
TH_D63P25
nv_capp
C2135
220uF
COMMON
20%
2V@105degC
AL-Polymer
3A@105degC,100KHz
0.009ohm
SMD_7343
C2324
560uF
COMMON
20%
2.5V@105degC
AL-Polymer
3.9A@105degC,100KHz
0.01ohm
SMD_D60
PCB CO-LAYOUT
GND
NVVDD
C266
820uF
COMMON
20%
2.5V@105degC
AL-Polymer
5A@105degC,100KHz
0.007ohm
TH_D63P25
nv_capp
C2137
220uF
COMMON
20%
2V@105degC
AL-Polymer
3A@105degC,100KHz
0.009ohm
SMD_7343
C2325
560uF
COMMON
20%
2.5V@105degC
AL-Polymer
3.9A@105degC,100KHz
0.01ohm
SMD_D60
PCB CO-LAYOUT
GND
PCB CO-LAYOUT

MSI

MICRO-STAR INT'L CO.,LTD

MS-V389

Size	Document Description	Rev
Custom	PS: NVVDD OUTPUT CAP(TOP)	1.1

Date: Thursday, July 23, 2020

BLANK

PS: INPUT SWITCH RTD3

AND GATE LOGIC FOR P-BOARD

GPIO1	GPIO23	SWITCH	VOUT
0	0	0	12V_F
0	1	0	12V_F
1	0	0	12V_F
1	1	1	3V3A

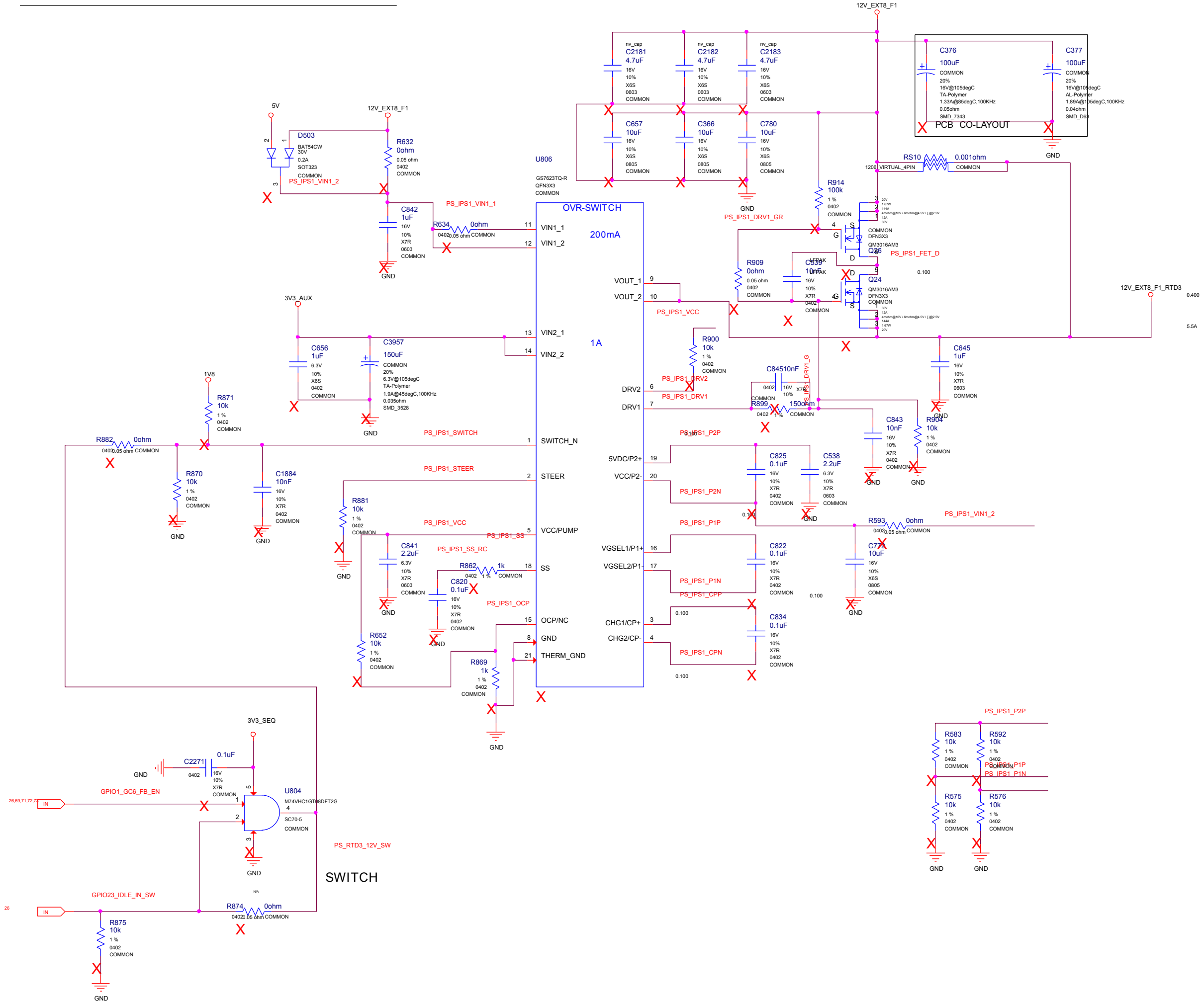

12V_EXT8_F1
C2181 4.7uF
C2182 4.7uF
C2183 4.7uF
C657 10uF
C366 10uF
C780 10uF
C376 100uF
C377 100uF
PCB CO-LAYOUT
GND
5V
12V_EXT8_F1
D503 BAT54CW
R632 0ohm
PS_IPS1_VIN1_2
U806
GS7623TQ-R
QFN3X3
COMMON
OVR-SWITCH
200mA
1A
C842 1uF
PS_IPS1_VIN1_1
R634 0ohm
VIN1_1
VIN1_2
VIN2_1
VIN2_2
VOUT_1
VOUT_2
DRV2
DRV1
SWITCH_N
STEER
VCC/PUMP
SS
OCP/NC
GND
THERM_GND
5VDC/P2+
VCC/P2-
VGSEL1/P1+
VGSEL2/P1-
CHG1/CP+
CHG2/CP-
3V3_AUX
C656 1uF
C3957 150uF
1V8
R871 10k
R882 0ohm
R870 10k
C1884 10nF
PS_IPS1_SWITCH
PS_IPS1_STEER
R881 10k
PS_IPS1_VCC
PS_IPS1_SS
C841 2.2uF
PS_IPS1_SS_RC
R862 1k
C820 0.1uF
PS_IPS1_OCP
R652 10k
R869 1k
R914 100k
PS_IPS1_DRV1_GR
R909 0ohm
C539 10nF
Q26 QM3016AM3 DFN3X3
Q24 QM3016AM3 DFN3X3
PS_IPS1_FET_D
RS10 0.001ohm
VIRTUAL_4PIN
12V_EXT8_F1_RTD3
C645 1uF
R900 10k
PS_IPS1_DRV2
PS_IPS1_DRV1
C845 10nF
R899 150ohm
C843 10nF
R904 10k
PS_IPS1_P2P
PS_IPS1_P2N
C825 0.1uF
C538 2.2uF
R593 0ohm
PS_IPS1_VIN1_2
C77 10uF
PS_IPS1_P1P
PS_IPS1_P1N
C822 0.1uF
PS_IPS1_CPP
C834 0.1uF
PS_IPS1_CPN
PS_IPS1_P2P
R583 10k
R592 10k
PS_IPS1_P1P
PS_IPS1_P1N
R575 10k
R576 10k
3V3_SEQ
C2271 0.1uF
U804
M74VHC1GT08DFT2G
SC70-5
GPIO1_GC6_FB_EN
IN
PS_RTD3_12V_SW
SWITCH
GPIO23_IDLE_IN_SW
R874 0ohm
R875 10k

MICRO-STAR INT'L CO.,LTD

MS-V389

Size	Document Description	Rev
Custom	PS: INPUT SWITCH RTD3	1.1

Date: Thursday, July 23, 2020 Sheet 64 of 76

BLANK

MICRO-STAR INT'L CO.,LTD		
MS-V389		
Size Custom	Document Description BLANK	Rev 1.1
Date: Thursday, July 23, 2020	Sheet 65 of 76	

PS: Inputs, Filtering, and Monitoring

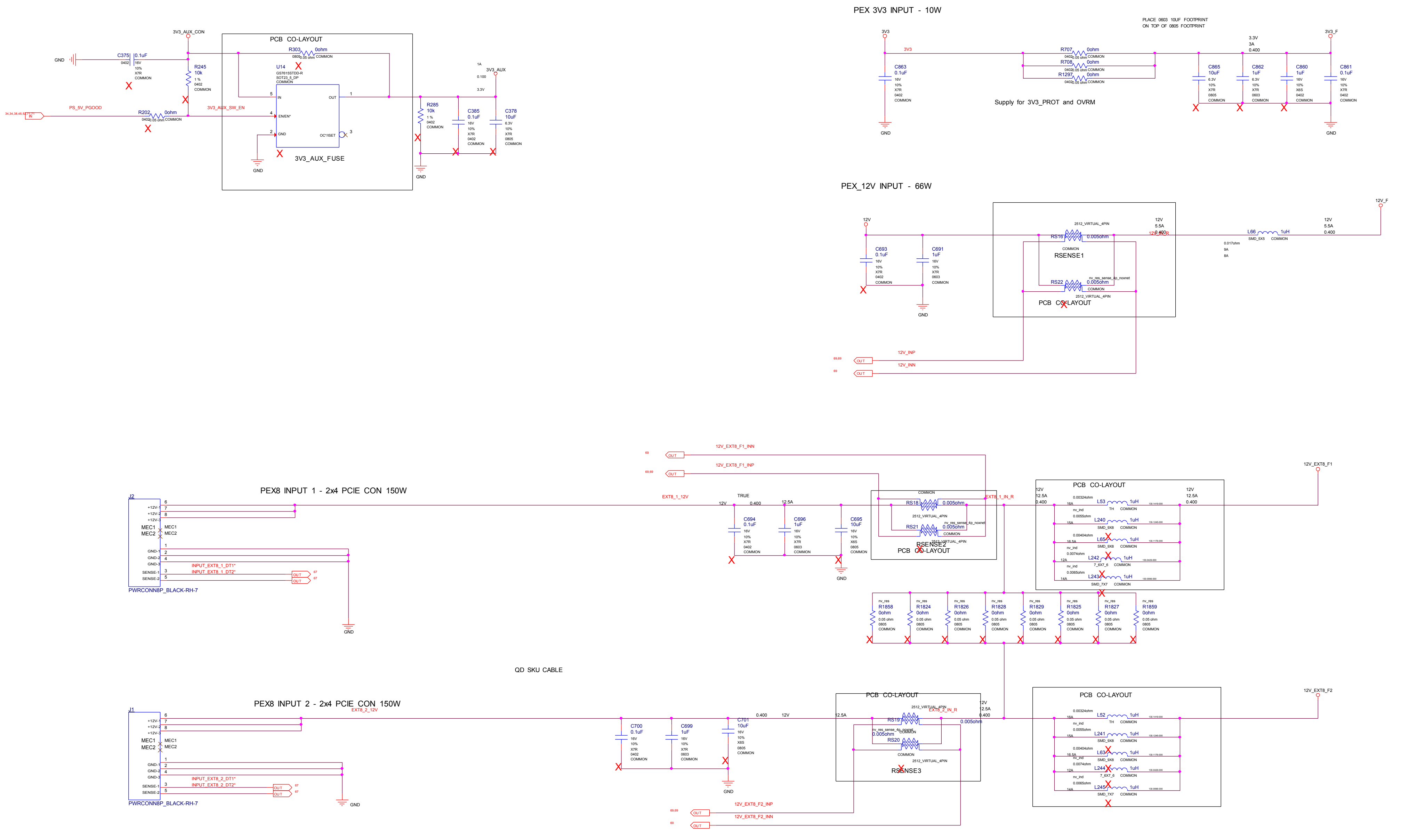
3V3_AUX_CON
GND
C375 0.1uF 0402 16V 10% X7R COMMON
R245 10k 1% 0402 COMMON
PCB CO-LAYOUT
R303 0ohm 0805 0.05 ohm COMMON
U14 GS7615STDD-R SOT23_5_DP COMMON
IN
OUT
EN/EN*
GND
OC*/ISET
3V3_AUX_FUSE
PS_5V_PGOOD
R202 0ohm 0402 0.05 ohm COMMON
3V3_AUX_SW_EN
R285 10k 1% 0402 COMMON
C385 0.1uF 16V 10% X7R 0402 COMMON
C378 10uF 6.3V 10% X7R 0805 COMMON
1A
3V3_AUX
0.100
3.3V
PEX 3V3 INPUT - 10W
3V3
C863 0.1uF 16V 10% X7R 0402 COMMON
R707 0ohm 0402 0.05 ohm COMMON
R708 0ohm 0402 0.05 ohm COMMON
R1297 0ohm 0402 0.05 ohm COMMON
PLACE 0603 10UF FOOTPRINT ON TOP OF 0805 FOOTPRINT
3.3V 3A 0.400
3V3_F
C865 10uF 6.3V 10% X7R 0805 COMMON
C862 1uF 6.3V 10% X7R 0603 COMMON
C860 1uF 16V 10% X6S 0402 COMMON
C861 0.1uF 16V 10% X7R 0402 COMMON
Supply for 3V3_PROT and OVRM
PEX_12V INPUT - 66W
12V
C693 0.1uF 16V 10% X7R 0402 COMMON
C691 1uF 16V 10% X7R 0603 COMMON
2512_VIRTUAL_4PIN
RS16 0.005ohm COMMON
RSENSE1
RS22 0.005ohm nv_res_sense_4p_noxnet COMMON
PCB CO-LAYOUT
12V 5.5A 0.400
L66 1uH SMD_5X5 COMMON
0.017ohm 9A 8A
12V_F
12V_INP
12V_INN
12V_EXT8_F1_INN
12V_EXT8_F1_INP
J2
PEX8 INPUT 1 - 2x4 PCIE CON 150W
+12V-1 +12V-2 +12V-3
MEC1 MEC2
GND-1 GND-2 GND-3
SENSE-1 SENSE-2
INPUT_EXT8_1_DT1*
INPUT_EXT8_1_DT2*
PWRCONN8P_BLACK-RH-7
EXT8_1_12V
TRUE
12V 0.400 12.5A
C694 0.1uF 16V 10% X7R 0402 COMMON
C696 1uF 16V 10% X7R 0603 COMMON
C695 10uF 16V 10% X6S 0805 COMMON
RS18 0.005ohm
RS21 0.005ohm
RSENSE2
EXT8_1_IN_R
PCB CO-LAYOUT
L53 1uH TH COMMON
L240 1uH SMD_9X8 COMMON
L65 1uH SMD_9X8 COMMON
L242 1uH 7_6X7_6 COMMON
L243 1uH SMD_7X7 COMMON
12V 12.5A 0.400
12V_EXT8_F1
R1858 R1824 R1826 R1828 R1829 R1825 R1827 R1859 0ohm 0.05 ohm 0805 COMMON
QD SKU CABLE
J1
PEX8 INPUT 2 - 2x4 PCIE CON 150W
EXT8_2_12V
INPUT_EXT8_2_DT1*
INPUT_EXT8_2_DT2*
C700 0.1uF 16V 10% X7R 0402 COMMON
C699 1uF 16V 10% X7R 0603 COMMON
C701 10uF 16V 10% X6S 0805 COMMON
RS19 RS20 0.005ohm
EXT8_2_IN_R
RSENSE3
L52 1uH TH COMMON
L241 1uH SMD_9X8 COMMON
L63 1uH SMD_9X8 COMMON
L244 1uH 7_6X7_6 COMMON
L245 1uH SMD_7X7 COMMON
12V_EXT8_F2
12V_EXT8_F2_INP
12V_EXT8_F2_INN

MICRO-STAR INT'L CO.,LTD

MS-V389

Size	Document Description	Rev
Custom	PS: Inputs, Filtering, and Monitoring	1.1

Date: Thursday, July 23, 2020 | Sheet 66 of 76

PS: 12V Current Steering & Hot Unplug Detect

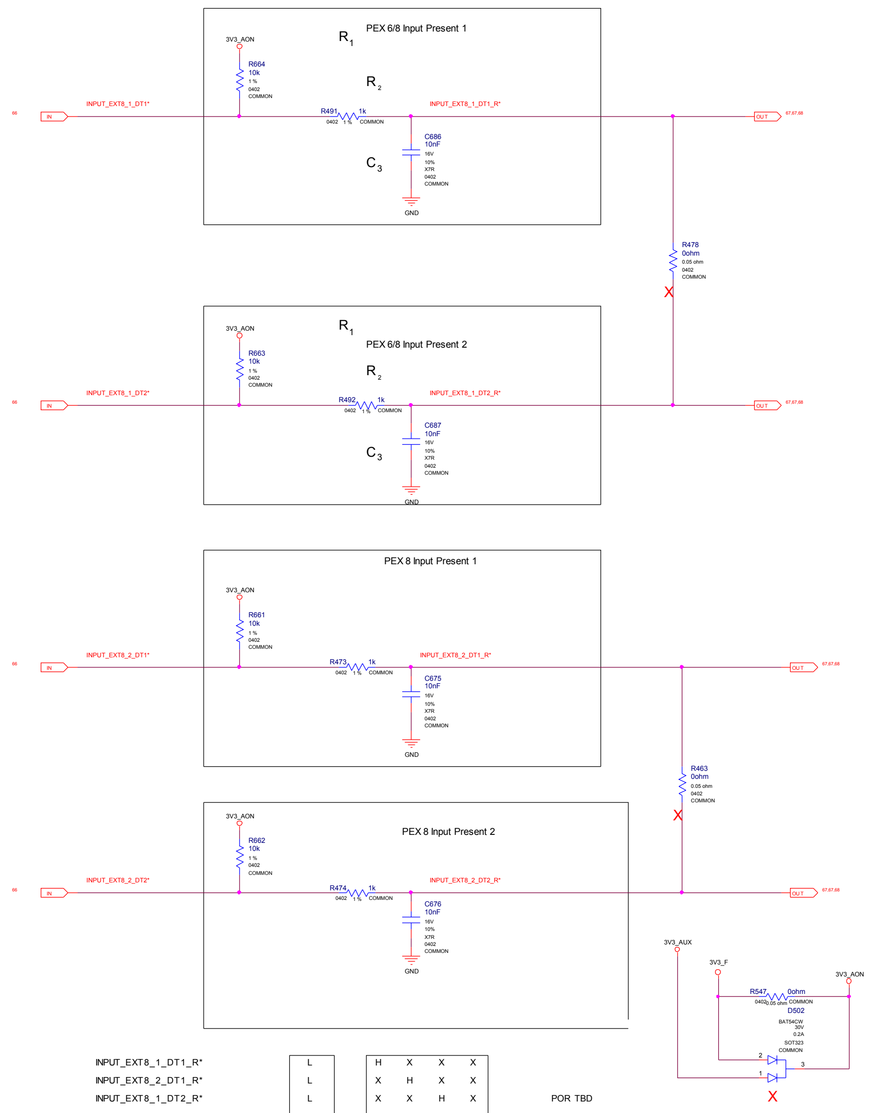
PEX 6/8 Input Present 1
R1
R2
C3
3V3_AON
R664 10k 1 % 0402 COMMON
66 IN INPUT_EXT8_1_DT1*
R491 1k 0402 1 % COMMON
INPUT_EXT8_1_DT1_R*
C686 10nF 16V 10% X7R 0402 COMMON
GND
OUT 67,67,68
R478 0ohm 0.05 ohm 0402 COMMON
X
PEX 6/8 Input Present 2
R1
R2
C3
3V3_AON
R663 10k 1 % 0402 COMMON
66 IN INPUT_EXT8_1_DT2*
R492 1k 0402 1 % COMMON
INPUT_EXT8_1_DT2_R*
C687 10nF 16V 10% X7R 0402 COMMON
GND
OUT 67,67,68
PEX 8 Input Present 1
3V3_AON
R661 10k 1 % 0402 COMMON
66 IN INPUT_EXT8_2_DT1*
R473 1k 0402 1 % COMMON
INPUT_EXT8_2_DT1_R*
C675 10nF 16V 10% X7R 0402 COMMON
GND
OUT 67,67,68
R463 0ohm 0.05 ohm 0402 COMMON
X
PEX 8 Input Present 2
3V3_AON
R662 10k 1 % 0402 COMMON
66 IN INPUT_EXT8_2_DT2*
R474 1k 0402 1 % COMMON
INPUT_EXT8_2_DT2_R*
C676 10nF 16V 10% X7R 0402 COMMON
GND
OUT 67,67,68
3V3_AUX
3V3_F
3V3_AON
R547 0ohm 0402 0.05 ohm COMMON
D502 BAT54CW 30V 0.2A SOT323 COMMON
2
1
3
X

	NORMAL BOOT	NO BOOT			
INPUT_EXT8_1_DT1_R*	L	H	X	X	X
INPUT_EXT8_2_DT1_R*	L	X	H	X	X
INPUT_EXT8_1_DT2_R*	L	X	X	H	X
INPUT_EXT8_2_DT2_R*	L	X	X	X	H

POR TBD

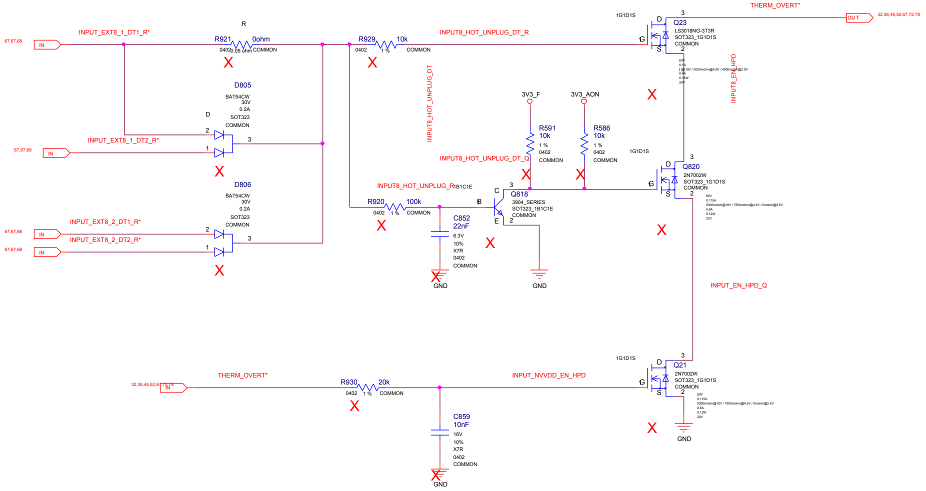
67,67,68 IN INPUT_EXT8_1_DT1_R*
R
R921 0ohm 0402 0.05 ohm COMMON
X
R929 10k 0402 1 % COMMON
X
INPUT8_HOT_UNPLUG_DT_R
1G1D1S
Q23 LS3018NG-3T3R SOT323_1G1D1S COMMON
THERM_OVERT*
OUT 32,38,45,52,67,72,78
D805 BAT54CW 30V 0.2A SOT323 COMMON
D
67,67,68 IN INPUT_EXT8_1_DT2_R*
X
INPUT8_HOT_UNPLUG_DT
INPUT8_EN_HPD
3V3_F
3V3_AON
R591 10k 1 % 0402 COMMON
R586 10k 1 % 0402 COMMON
INPUT8_HOT_UNPLUG_DT_Q
1G1D1S
Q820 2N7002W SOT323_1G1D1S COMMON
INPUT8_HOT_UNPLUG_R 1B1C1E
R920 100k 0402 1 % COMMON
Q818 3904_SERIES SOT323_1B1C1E COMMON
C852 22nF 6.3V 10% X7R 0402 COMMON
D806 BAT54CW 30V 0.2A SOT323 COMMON
67,67,68 IN INPUT_EXT8_2_DT1_R*
67,67,68 IN INPUT_EXT8_2_DT2_R*
GND
GND
INPUT_EN_HPD_Q
1G1D1S
Q21 2N7002W SOT323_1G1D1S COMMON
32,38,45,52,67,72,78 IN THERM_OVERT*
R930 20k 0402 1 % COMMON
INPUT_NVVDD_EN_HPD
C859 10nF 16V 10% X7R 0402 COMMON
GND
GND
60V 0.115A 5000mohm@10V / 7500mohm@4.5V / 0mohm@2.5V 0.8A 0.12W 20V

PEX Input - Under Power Boot Controls

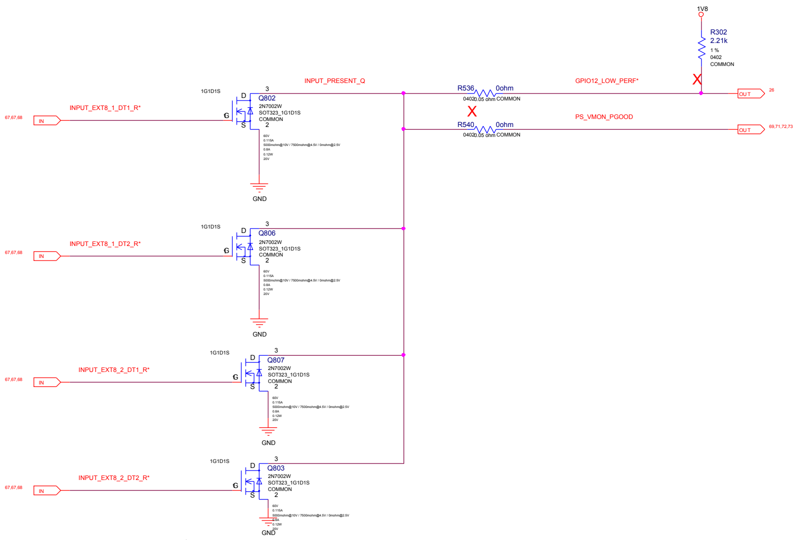
1V8
R302 2.21k 1 % 0402 COMMON
X
INPUT_PRESENT_Q
R536 0ohm 0402 0.05 ohm COMMON
X
GPIO12_LOW_PERF*
OUT 26
PS_VMON_PGOOD
R540 0ohm 0402 0.05 ohm COMMON
OUT 69,71,72,73
1G1D1S
Q802 2N7002W SOT323_1G1D1S COMMON
67,67,68 IN INPUT_EXT8_1_DT1_R*
1G1D1S
Q806 2N7002W SOT323_1G1D1S COMMON
67,67,68 IN INPUT_EXT8_1_DT2_R*
1G1D1S
Q807 2N7002W SOT323_1G1D1S COMMON
67,67,68 IN INPUT_EXT8_2_DT1_R*
1G1D1S
Q803 2N7002W SOT323_1G1D1S COMMON
67,67,68 IN INPUT_EXT8_2_DT2_R*
60V 0.115A 5000mohm@10V / 7500mohm@4.5V / 0mohm@2.5V 0.8A 0.12W 20V
GND

GPIO12_LOW_PERF*	GPU SPEED
0	Slow
1	Normal

A 2 x 4 auxiliary power connector plug from the power supply unit must not use the 75 W sense coding (Sense1=Open and Sense0=Ground) to avoid end-user confusion.

MSI

MICRO-STAR INT'L CO.,LTD

MS-V389

Size	Document Description	Rev
Custom	PS: 12V Current Steering & Hot Unplug Detect	1.1

Date: Thursday, July 23, 2020 Sheet 67 of 76

PS: Discrete Steering

12V CURRENT STEERING (UNDER POWER BOOT):

PEX12V AND 12V_EXT8_F1

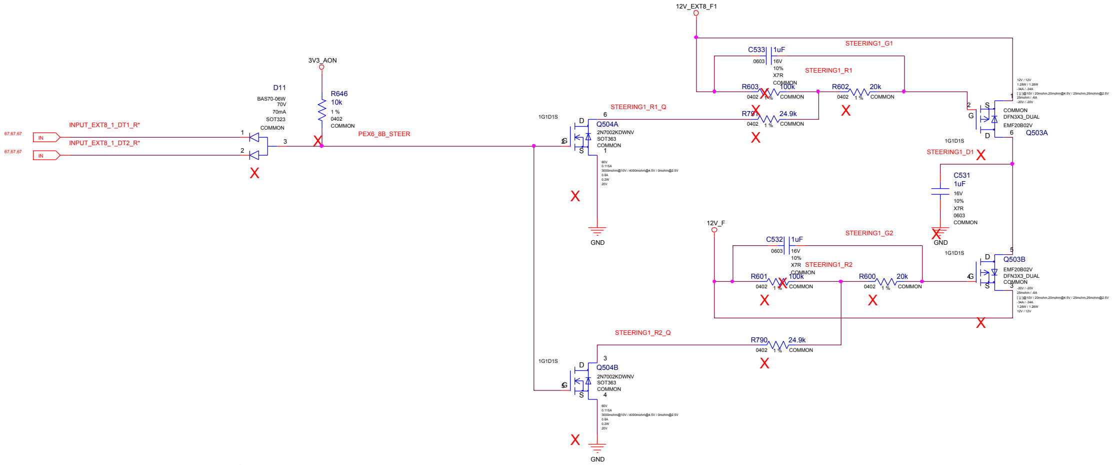
12V_EXT8_F1
3V3_AON
D11
BAS70-06W
70V
70mA
SOT323
COMMON
R646
10k
1 %
0402
COMMON
67,67,67
IN
INPUT_EXT8_1_DT1_R*
INPUT_EXT8_1_DT2_R*
PEX6_8B_STEER
1G1D1S
Q504A
2N7002KDWNV
SOT363
COMMON
GND
STEERING1_R1_Q
C533
1uF
0603
16V
10%
X7R
COMMON
STEERING1_G1
STEERING1_R1
R603
100k
R602
20k
R79
24.9k
0402
1 %
Q503A
EMF20B02V
DFN3X3_DUAL
STEERING1_D1
C531
1uF
12V_F
C532
1uF
STEERING1_G2
STEERING1_R2
R601
100k
R600
20k
Q503B
STEERING1_R2_Q
R790
24.9k
Q504B
D
G
S
X

NO STUFF BY DEFAULT REF ONLY

PEX12V AND 12V_EXT8_F2

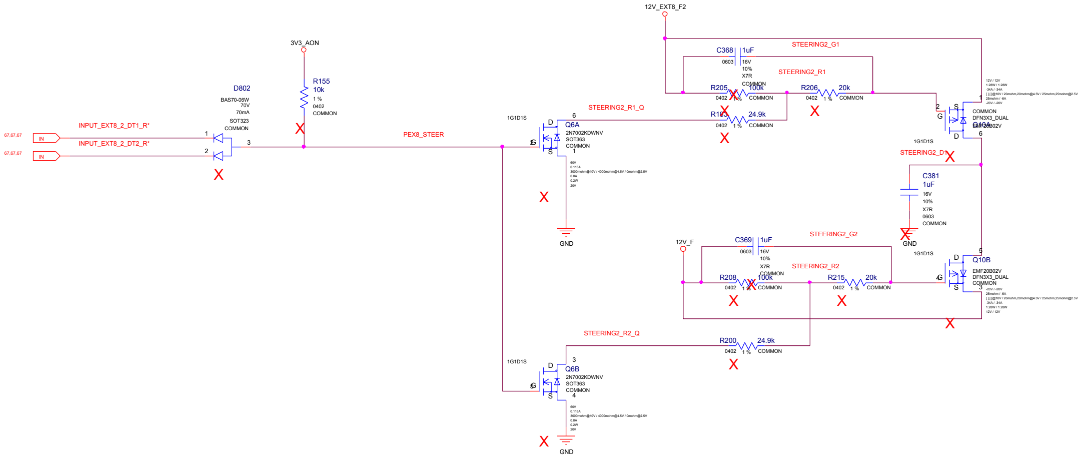
12V_EXT8_F2
3V3_AON
D802
BAS70-06W
70V
70mA
SOT323
COMMON
R155
10k
1 %
0402
COMMON
67,67,67
IN
INPUT_EXT8_2_DT1_R*
INPUT_EXT8_2_DT2_R*
PEX8_STEER
1G1D1S
Q6A
2N7002KDWNV
SOT363
COMMON
GND
STEERING2_R1_Q
C368
1uF
0603
16V
10%
X7R
COMMON
STEERING2_G1
STEERING2_R1
R205
100k
R206
20k
R183
24.9k
Q10A
EMF20B02V
DFN3X3_DUAL
STEERING2_D1
C381
1uF
12V_F
C369
1uF
STEERING2_G2
STEERING2_R2
R208
100k
R215
20k
Q10B
STEERING2_R2_Q
R200
24.9k
Q6B
D
G
S
X

MICRO-STAR INT'L CO.,LTD

MS-V389

Size
Custom

Document Description
PS: Discrete Steering

Rev
1.1

Date: Thursday, July 23, 2020

Sheet 68 of 76

PS: Pre-Filter

Route the trace to PEX Golden Finger

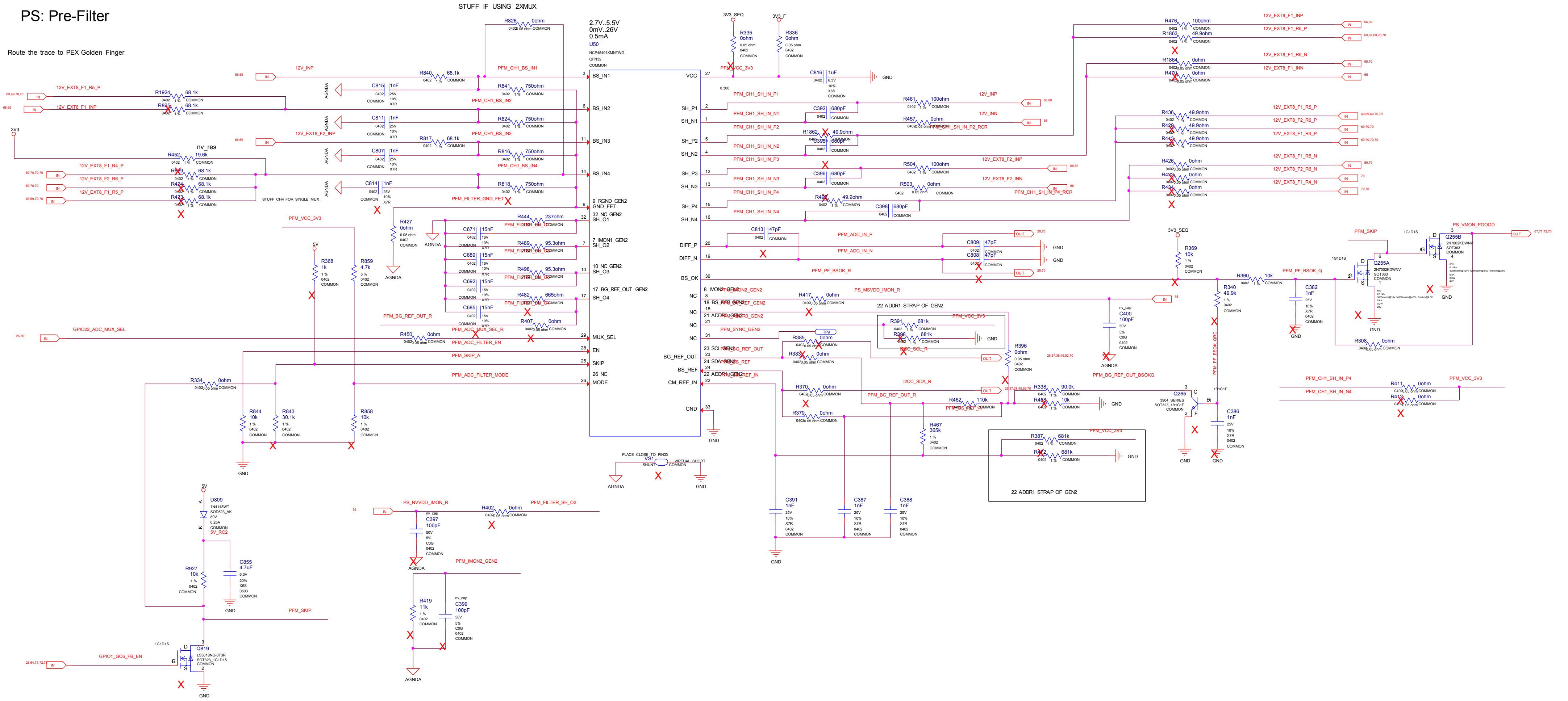
STUFF IF USING 2XMUX
2.7V..5.5V
0mV..26V
0.5mA
U50
NCP45491XMNTWG
QFN32
COMMON
BS_IN1
BS_IN2
BS_IN3
BS_IN4
9 RGND GEN2
GND_FET
32 NC GEN2
SH_O1
7 IMON1 GEN2
SH_O2
10 NC GEN2
SH_O3
17 BG_REF_OUT GEN2
SH_O4
MUX_SEL
EN
SKIP
26 NC
MODE
VCC
SH_P1
SH_N1
SH_P2
SH_N2
SH_P3
SH_N3
SH_P4
SH_N4
DIFF_P
DIFF_N
BS_OK
8 IMON2 GEN2
18 BS_REF GEN2
21 ADDR0 GEN2
23 SCL GEN2
24 SDA GEN2
22 ADDR1 GEN2
BG_REF_OUT
BS_REF
CM_REF_IN
22 ADDR1 STRAP OF GEN2
STUFF CH4 FOR SINGLE MUX
PLACE CLOSE TO PIN33
VS1
SHUNT
VIRTUAL_SHORT
3V3_SEQ
3V3_F
3V3
5V
12V_INP
12V_INN
12V_EXT8_F1_R5_P
12V_EXT8_F1_INP
12V_EXT8_F1_R4_P
12V_EXT8_F2_R6_P
12V_EXT8_F2_INP
12V_EXT8_F1_R5_N
12V_EXT8_F1_INN
12V_EXT8_F2_R6_N
12V_EXT8_F1_R4_N
12V_EXT8_F2_INN
PFM_VCC_3V3
PFM_ADC_IN_P
PFM_ADC_IN_N
PFM_PF_BSOK_R
PFM_PF_BSOK_Q
PS_MSVDD_IMON_R
PS_NVVDD_IMON_R
PS_VMON_PGOOD
PFM_SKIP
PFM_BG_REF_OUT_R
PFM_BG_REF_OUT_BSOKQ
PFM_SYNC_GEN2
PFM_ADC_MUX_SEL_R
PFM_ADC_FILTER_EN
PFM_SKIP_A
PFM_ADC_FILTER_MODE
PFM_FILTER_GND_FET
PFM_FILTER_SH_O2
PFM_IMON2_GEN2
I2CC_SDA_R
I2CC_SCL_R
GPIO22_ADC_MUX_SEL
GPIO1_GC6_FB_EN
5V_RG2
nv_res
nv_cap
D809
1N4148WT
SOD523_AK
Q819
LS3018NG-3T3R
SOT323_1G1D1S
Q255A
Q255B
2N7002KDWNV
SOT363
Q265
3904_SERIES
SOT323_1B1C1E
AGNDA
GND

MICRO-STAR INT'L CO.,LTD		
MS-V389		
Size Custom	Document Description PS: Pre-Filter	Rev 1.1
Date: Thursday, July 23, 2020	Sheet 69 of 76	

PS: Pre-Filter B

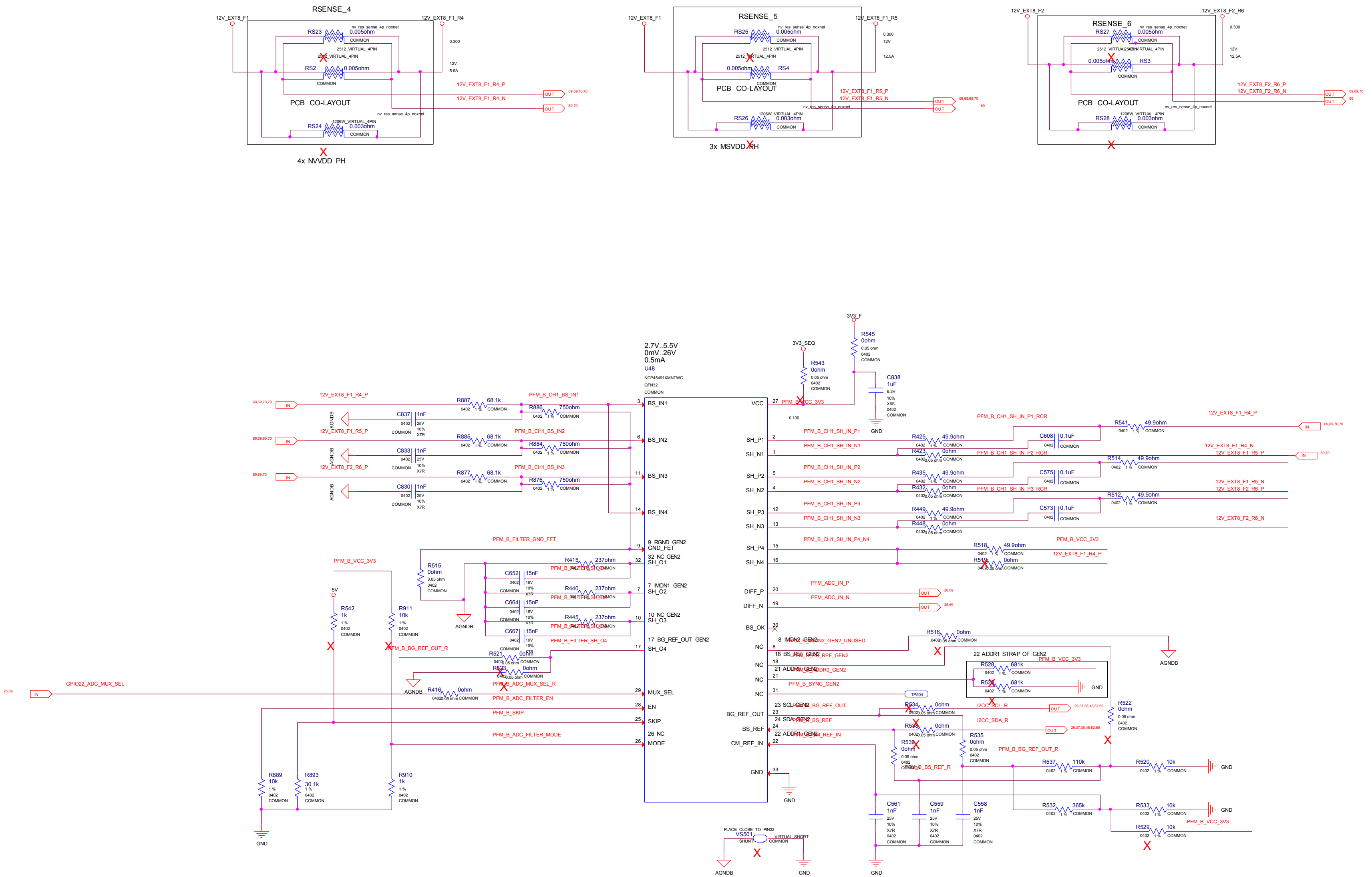

RSENSE_4
12V_EXT8_F1
12V_EXT8_F1_R4
RS23 0.005ohm
nv_res_sense_4p_noxnet
2512_VIRTUAL_4PIN
RS2 0.005ohm
COMMON
0.300
12V
5.5A
12V_EXT8_F1_R4_P
12V_EXT8_F1_R4_N
PCB CO-LAYOUT
RS24 0.003ohm
1206W_VIRTUAL_4PIN
4x NVVDD PH
RSENSE_5
12V_EXT8_F1_R5
RS25 0.005ohm
RS4
12.5A
12V_EXT8_F1_R5_P
12V_EXT8_F1_R5_N
RS26 0.003ohm
3x MSVDD PH
RSENSE_6
12V_EXT8_F2
12V_EXT8_F2_R6
RS27 0.005ohm
RS3 0.005ohm
12V_EXT8_F2_R6_P
12V_EXT8_F2_R6_N
RS28 0.003ohm
OUT
IN
2.7V..5.5V
0mV..26V
0.5mA
U48
NCP45491XMNTWG
QFN32
COMMON
3 BS_IN1
6 BS_IN2
11 BS_IN3
14 BS_IN4
9 RGND GEN2
GND_FET
32 NC GEN2
SH_O1
7 IMON1 GEN2
SH_O2
10 NC GEN2
SH_O3
17 BG_REF_OUT GEN2
SH_O4
29 MUX_SEL
28 EN
25 SKIP
26 NC
MODE
27 VCC
2 SH_P1
1 SH_N1
5 SH_P2
4 SH_N2
12 SH_P3
13 SH_N3
15 SH_P4
16 SH_N4
20 DIFF_P
19 DIFF_N
30 BS_OK
8 IMON2 GEN2
NC
18 BS_REF GEN2
21 ADDR0 GEN2
31 NC
23 SCL GEN2
BG_REF_OUT
24 SDA GEN2
BS_REF
22 ADDR1 GEN2
CM_REF_IN
33 GND
PFM_B_VCC_3V3
3V3_SEQ
3V3_F
R543 0ohm
R545 0ohm
0.05 ohm
0402
C838 1uF
6.3V
10%
X6S
GND
0.100
PFM_B_CH1_BS_IN1
PFM_B_CH1_BS_IN2
PFM_B_CH1_BS_IN3
R887 68.1k
R886 750ohm
R885 68.1k
R884 750ohm
R877 68.1k
R876 750ohm
C837 1nF
C833 1nF
C830 1nF
25V
X7R
AGNDB
12V_EXT8_F1_R4_P
12V_EXT8_F1_R5_P
12V_EXT8_F2_R6_P
PFM_B_FILTER_GND_FET
PFM_B_VCC_3V3
R515 0ohm
R415 237ohm
R440 237ohm
R445 237ohm
C652 15nF
C664 15nF
C667 15nF
16V
PFM_B_FILTER_SH_O1
PFM_B_FILTER_SH_O2
PFM_B_FILTER_SH_O3
PFM_B_FILTER_SH_O4
5V
R542 1k
R911 10k
PFM_B_BG_REF_OUT_R
R521 0ohm
R523 0ohm
PFM_B_ADC_MUX_SEL_R
GPIO22_ADC_MUX_SEL
R416 0ohm
PFM_B_ADC_FILTER_EN
PFM_B_SKIP
PFM_B_ADC_FILTER_MODE
R889 10k
R893 30.1k
R910 1k
PFM_B_CH1_SH_IN_P1
PFM_B_CH1_SH_IN_N1
PFM_B_CH1_SH_IN_P2
PFM_B_CH1_SH_IN_N2
PFM_B_CH1_SH_IN_P3
PFM_B_CH1_SH_IN_N3
PFM_B_CH1_SH_IN_P4_N4
R425 49.9ohm
R423 0ohm
R435 49.9ohm
R432 0ohm
R449 49.9ohm
R448 0ohm
C608 0.1uF
C575 0.1uF
C573 0.1uF
PFM_B_CH1_SH_IN_P1_RCR
PFM_B_CH1_SH_IN_P2_RCR
PFM_B_CH1_SH_IN_P3_RCR
R541 49.9ohm
R514 49.9ohm
R512 49.9ohm
12V_EXT8_F1_R4_P
12V_EXT8_F1_R4_N
12V_EXT8_F1_R5_P
12V_EXT8_F1_R5_N
12V_EXT8_F2_R6_P
12V_EXT8_F2_R6_N
R518 49.9ohm
R519 0ohm
PFM_ADC_IN_P
PFM_ADC_IN_N
R516 0ohm
PFM_B_IMON2_GEN2_UNUSED
PFM_B_BS_REF_GEN2
PFM_B_ADDR0_GEN2
PFM_B_SYNC_GEN2
22 ADDR1 STRAP OF GEN2
R528 681k
R527 681k
TP504
PFM_B_BG_REF_OUT
PFM_B_BS_REF
PFM_B_CM_REF_IN
R534 0ohm
R526 0ohm
I2CC_SCL_R
I2CC_SDA_R
R539 0ohm
R535 0ohm
R522 0ohm
PFM_B_BS_REF_R
PFM_B_BG_REF_OUT_R
R537 110k
R520 10k
R532 365k
R533 10k
R529 10k
C561 1nF
C559 1nF
C558 1nF
PLACE CLOSE TO PIN33
VS501
SHUNT
VIRTUAL_SHORT

MICRO-STAR INT'L CO.,LTD		
MS-V389		
Size Custom	Document Description PS: Pre-Filter B	Rev 1.1
Date: Thursday, July 23, 2020	Sheet 70 of 76	

SEQUENCE:5V,1V8,3V3_SEQ ENABLE

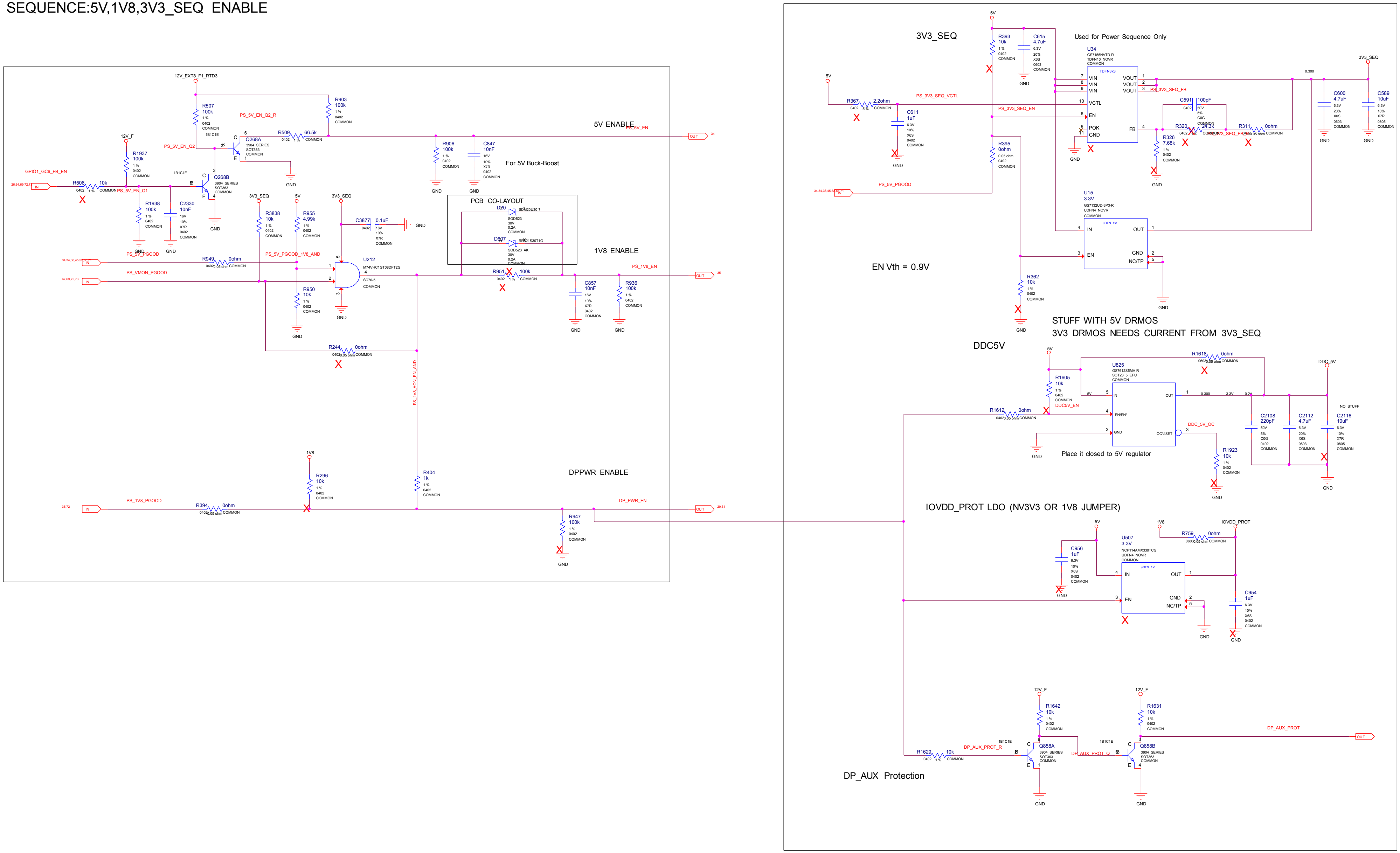
12V_EXT8_F1_RTD3
R507 100k 1 % 0402 COMMON
R903 100k 1 % 0402 COMMON
PS_5V_EN_Q2_R
R509 66.5k 0402 1 % COMMON
Q268A 3904_SERIES SOT363 COMMON
1B1C1E
PS_5V_EN_Q2
12V_F
R1937 100k 1 % 0402 COMMON
GPIO1_GC6_FB_EN
26,64,69,72,73 IN
R508 10k 0402 1 % COMMON
PS_5V_EN_Q1
Q268B 3904_SERIES SOT363 COMMON
R1938 100k 1 % 0402 COMMON
C2330 10nF 16V 10% X7R 0402 COMMON
GND
5V ENABLE
PS_5V_EN
OUT 34
R906 100k 1 % 0402 COMMON
C847 10nF 16V 10% X7R 0402 COMMON
For 5V Buck-Boost
3V3_SEQ
5V
R3838 10k 1 % 0402 COMMON
R955 4.99k 1 % 0402 COMMON
C3877 0.1uF 0402 16V 10% X7R COMMON
PCB CO-LAYOUT
D20 SDM20U30-7 SOD523 30V 0.2A COMMON
D607 RB521S30T1G SOD523_AK 30V 0.2A COMMON
1V8 ENABLE
PS_1V8_EN
OUT 35
PS_5V_PGOOD
34,34,38,45,52,66,71 IN
R949 0ohm 0402 0.05 ohm COMMON
PS_5V_PGOOD_1V8_AND
U212 M74VHC1GT08DFT2G SC70-5 COMMON
PS_VMON_PGOOD
67,69,72,73 IN
R951 100k 0402 1 % COMMON
C857 10nF 16V 10% X7R 0402 COMMON
R936 100k 1 % 0402 COMMON
R950 10k 1 % 0402 COMMON
R244 0ohm 0402 0.05 ohm COMMON
PS_1V8_AON_EN_AND
1V8
R296 10k 1 % 0402 COMMON
R404 1k 1 % 0402 COMMON
DPPWR ENABLE
PS_1V8_PGOOD
35,72 IN
R394 0ohm 0402 0.05 ohm COMMON
DP_PWR_EN
OUT 29,31
R947 100k 1 % 0402 COMMON
3V3_SEQ
R393 10k 1 % 0402 COMMON
C615 4.7uF 6.3V 20% X6S 0603 COMMON
Used for Power Sequence Only
U34 GS7155NVTD-R TDFN10_NOVR COMMON
TDFN3x3
VIN VIN VIN VCTL EN POK GND VOUT VOUT VOUT FB
R367 2.2ohm 0402 5 % COMMON
PS_3V3_SEQ_VCTL
PS_3V3_SEQ_EN
PS_3V3_SEQ_FB
C611 1uF 6.3V 10% X6S 0402 COMMON
C591 100pF 0402 50V 5% C0G COMMON
R320 24.3k 0402 1% COMMON
R311 0ohm 0402 0.05 ohm COMMON
R326 7.68k 1 % 0402 COMMON
0.300
C600 4.7uF 6.3V 20% X6S 0603 COMMON
C589 10uF 6.3V 10% X7R 0805 COMMON
R395 0ohm 0.05 ohm 0402 COMMON
PS_5V_PGOOD
U15 3.3V GS7132UD-3P3-R UDFN4_NOVR COMMON
uDFN 1x1
IN OUT EN GND NC/TP
EN Vth = 0.9V
R362 10k 1 % 0402 COMMON
STUFF WITH 5V DRMOS
3V3 DRMOS NEEDS CURRENT FROM 3V3_SEQ
DDC5V
R1618 0ohm 0603 0.05 ohm COMMON
U825 GS7612S5MA-R SOT23_5_EFU COMMON
IN EN/EN* GND OUT OC*/ISET
R1605 10k 1 % 0402 COMMON
DDC5V_EN
R1612 0ohm 0402 0.05 ohm COMMON
0.300 3.3V 0.2A
DDC_5V
NO STUFF
DDC_5V_OC
C2108 220pF 50V 5% C0G 0402 COMMON
C2112 4.7uF 6.3V 20% X6S 0603 COMMON
C2116 10uF 6.3V 10% X7R 0805 COMMON
Place it closed to 5V regulator
R1923 10k 1 % 0402 COMMON
IOVDD_PROT LDO (NV3V3 OR 1V8 JUMPER)
IOVDD_PROT
R759 0ohm 0603 0.05 ohm COMMON
U507 3.3V NCP114AMX330TCG UDFN4_NOVR COMMON
C956 1uF 6.3V 10% X6S 0402 COMMON
C954 1uF 6.3V 10% X6S 0402 COMMON
R1642 10k 1 % 0402 COMMON
R1631 10k 1 % 0402 COMMON
DP_AUX_PROT
OUT 28,29,30,31
Q858A 3904_SERIES SOT363 COMMON
Q858B 3904_SERIES SOT363 COMMON
DP_AUX_PROT_R
DP_AUX_PROT_Q
R1629 10k 0402 1 % COMMON
DP_AUX Protection

MICRO-STAR INT'L CO.,LTD

MS-V389

Size Custom

Document Description SEQUENCE:5V,1V8,3V3_SEQ ENABLE

Rev 1.1

Date: Thursday, July 23, 2020

Sheet 71 of 76

SEQUENCE:NV,PEX,FB ENABLE

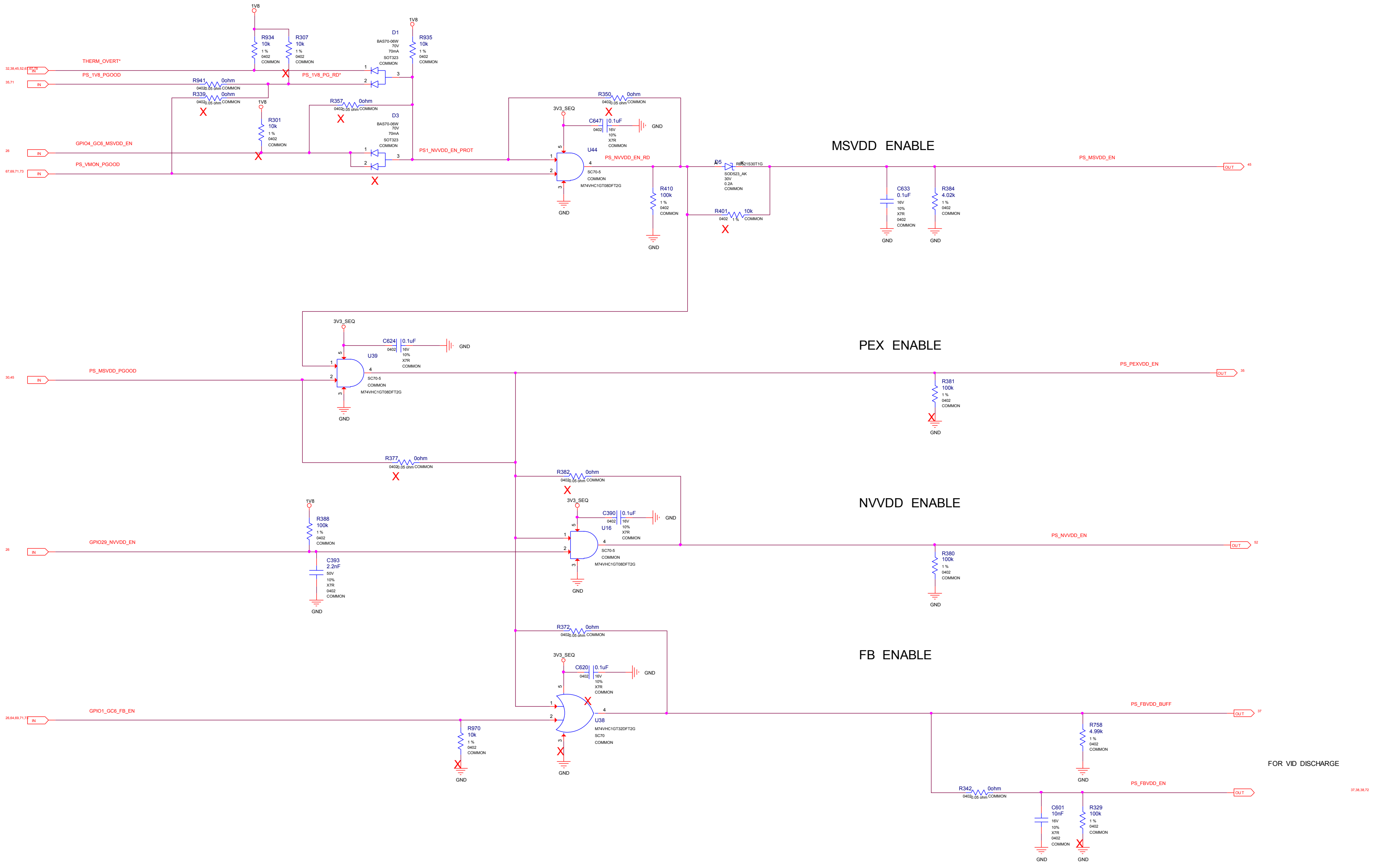
MSVDD ENABLE
PEX ENABLE
NVVDD ENABLE
FB ENABLE
FOR VID DISCHARGE
1V8
THERM_OVERT*
32,38,45,52,67,67,78
IN
PS_1V8_PGOOD
35,71
GPIO4_GC6_MSVDD_EN
26
PS_VMON_PGOOD
67,69,71,73
R934 10k 1 % 0402 COMMON
R307 10k 1 % 0402 COMMON
R935 10k 1 % 0402 COMMON
R941 0ohm 0402 0.05 ohm COMMON
R339 0ohm 0402 0.05 ohm COMMON
R357 0ohm 0402 0.05 ohm COMMON
R301 10k 1 % 0402 COMMON
D1 BAS70-06W 70V 70mA SOT323 COMMON
D3 BAS70-06W 70V 70mA SOT323 COMMON
PS_1V8_PG_RD*
PS1_NVVDD_EN_PROT
R350 0ohm 0402 0.05 ohm COMMON
3V3_SEQ
C647 0.1uF 0402 16V 10% X7R COMMON
GND
U44 SC70-5 COMMON M74VHC1GT08DFT2G
PS_NVVDD_EN_RD
R410 100k 1 % 0402 COMMON
D5 RB521S30T1G SOD523_AK 30V 0.2A COMMON
A
K
R401 10k 0402 1 % COMMON
C633 0.1uF 16V 10% X7R 0402 COMMON
R384 4.02k 1 % 0402 COMMON
PS_MSVDD_EN
OUT
45
PS_MSVDD_PGOOD
30,45
C624 0.1uF 0402 16V 10% X7R COMMON
U39 SC70-5 COMMON M74VHC1GT08DFT2G
PS_PEXVDD_EN
35
R381 100k 1 % 0402 COMMON
R377 0ohm 0402 0.05 ohm COMMON
R382 0ohm 0402 0.05 ohm COMMON
R388 100k 1 % 0402 COMMON
GPIO29_NVVDD_EN
C393 2.2nF 50V 10% X7R 0402 COMMON
C390 0.1uF 0402 16V 10% X7R COMMON
U16 SC70-5 COMMON M74VHC1GT08DFT2G
PS_NVVDD_EN
52
R380 100k 1 % 0402 COMMON
R372 0ohm 0402 0.05 ohm COMMON
C620 0.1uF 0402 16V 10% X7R COMMON
GPIO1_GC6_FB_EN
26,64,69,71,73
R970 10k 1 % 0402 COMMON
U38 M74VHC1GT32DFT2G SC70 COMMON
PS_FBVDD_BUFF
37
R758 4.99k 1 % 0402 COMMON
R342 0ohm 0402 0.05 ohm COMMON
PS_FBVDD_EN
37,38,38,72
C601 10nF 16V 10% X7R 0402 COMMON
R329 100k 1 % 0402 COMMON
1
2
3
4
5

MSI
MICRO-STAR INT'L CO.,LTD
MS-V389
Size Custom
Document Description SEQUENCE:NV,PEX,FB ENABLE
Rev 1.1
Date: Thursday, July 23, 2020
Sheet 72 of 76

Sequence: 3V3 MONITOR

3V3PEX Monitor

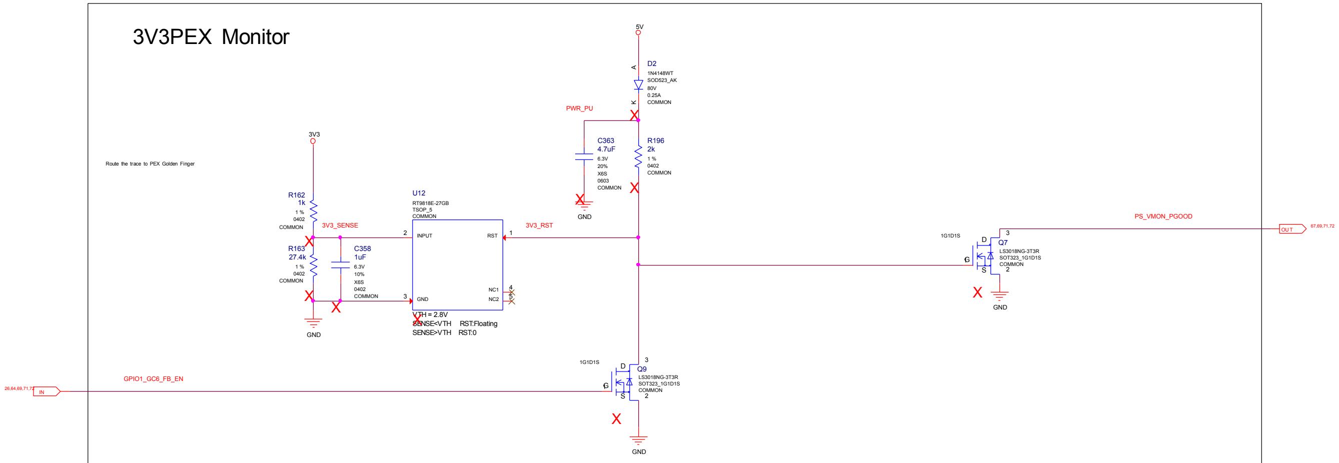
Route the trace to PEX Golden Finger
3V3
R162
1k
1 %
0402
COMMON
3V3_SENSE
R163
27.4k
1 %
0402
COMMON
C358
1uF
6.3V
10%
X6S
0402
COMMON
GND
U12
RT9818E-27GB
TSOP_5
COMMON
2
INPUT
RST
1
3
GND
NC1
NC2
4
5
VTH = 2.8V
SENSE<VTH RST:Floating
SENSE>VTH RST:0
3V3_RST
5V
A
D2
1N4148WT
SOD523_AK
80V
0.25A
COMMON
K
PWR_PU
C363
4.7uF
6.3V
20%
X6S
0603
COMMON
GND
R196
2k
1 %
0402
COMMON
1G1D1S
D
G
S
3
Q9
LS3018NG-3T3R
SOT323_1G1D1S
COMMON
2
GND
26,64,69,71,72
IN
GPIO1_GC6_FB_EN
1G1D1S
D
G
S
3
Q7
LS3018NG-3T3R
SOT323_1G1D1S
COMMON
2
GND
PS_VMON_PGOOD
OUT
67,69,71,72

3V3 can be monitored by OVR-M with un-used Channel

MICRO-STAR INT'L CO.,LTD

MS-V389

Size Custom
Document Description Sequence: 3V3 MONITOR
Rev 1.1
Date: Thursday, July 23, 2020
Sheet 73 of 76

SEQUENCE:MISC

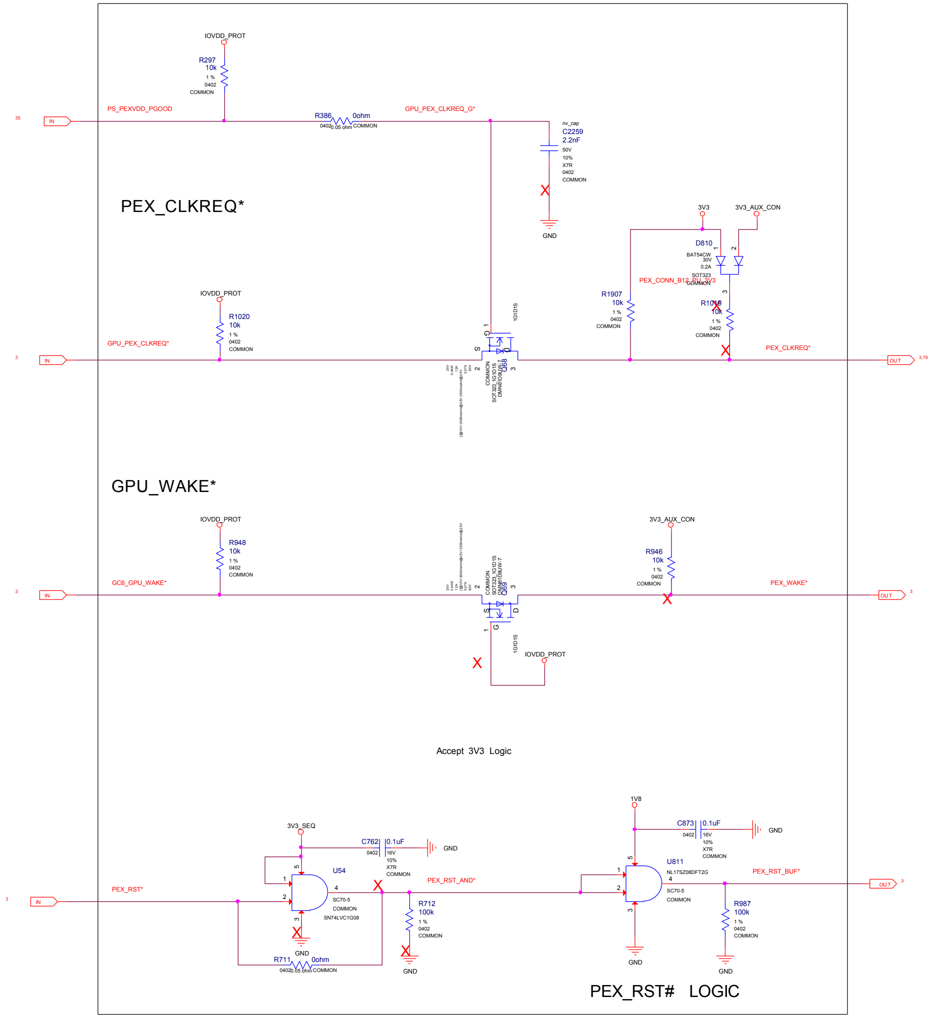
PEX_CLKREQ*
IOVDD_PROT
R297
10k
1 %
0402
COMMON
35
IN
PS_PEXVDD_PGOOD
R386
0ohm
0402
0.05 ohm
COMMON
GPU_PEX_CLKREQ_G*
nv_cap
C2259
2.2nF
50V
10%
X7R
0402
COMMON
GND
3V3
3V3_AUX_CON
D810
BAT54CW
30V
0.2A
SOT323
COMMON
PEX_CONN_B12_PU_3V3
R1907
10k
1 %
0402
COMMON
R1019
10k
1 %
0402
COMMON
IOVDD_PROT
R1020
10k
1 %
0402
COMMON
3
IN
GPU_PEX_CLKREQ*
1G1D1S
G
S
D
Q68
DMN61D9UW-7
SOT323_1G1D1S
COMMON
PEX_CLKREQ*
OUT
3,79
GPU_WAKE*
IOVDD_PROT
R948
10k
1 %
0402
COMMON
3
IN
GC6_GPU_WAKE*
Q69
DMN61D9UW-7
SOT323_1G1D1S
COMMON
1G1D1S
IOVDD_PROT
3V3_AUX_CON
R946
10k
1 %
0402
COMMON
PEX_WAKE*
OUT
3
Accept 3V3 Logic
3V3_SEQ
C762
0.1uF
0402
16V
10%
X7R
COMMON
GND
U54
SC70-5
COMMON
SN74LVC1G08
3
IN
PEX_RST*
GND
R711
0ohm
0402
0.05 ohm
COMMON
PEX_RST_AND*
R712
100k
1 %
0402
COMMON
GND
1V8
C873
0.1uF
0402
16V
10%
X7R
COMMON
GND
U811
NL17SZ08DFT2G
SC70-5
COMMON
PEX_RST_BUF*
OUT
3
R987
100k
1 %
0402
COMMON
GND
GND
PEX_RST# LOGIC

MICRO-STAR INT'L CO.,LTD

MS-V389

Size
Custom

Document Description
SEQUENCE:MISC

Rev
1.1

Date: Thursday, July 23, 2020

A

MISC: LED & FAN

2-PIN LED HEADER

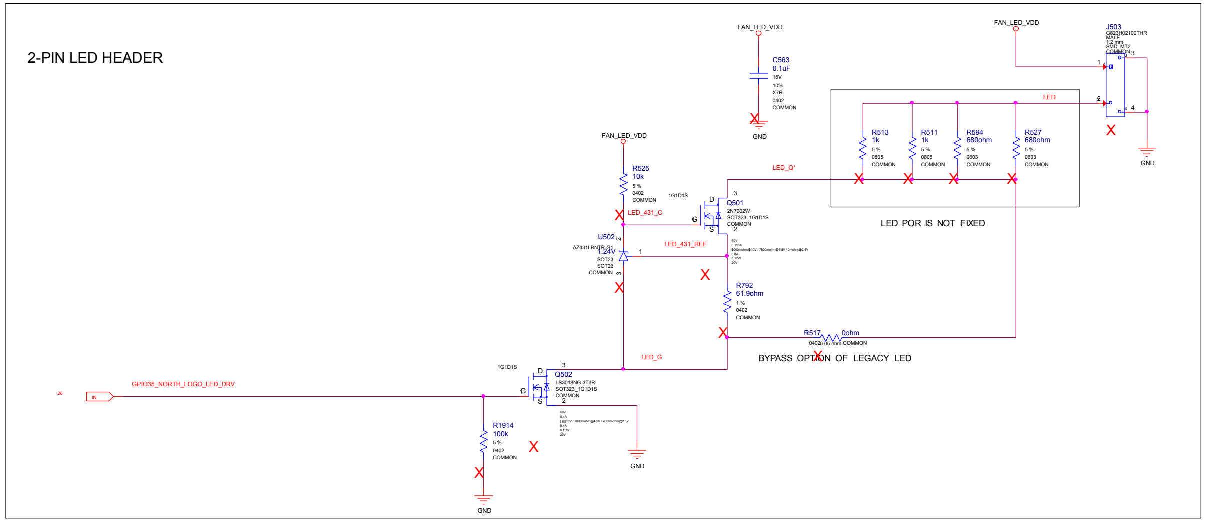
FAN_LED_VDD
C563
0.1uF
16V
10%
X7R
0402
COMMON
GND
FAN_LED_VDD
J503
G823H02100THR
MALE
SMD_MT2
COMMON
1
2
3
4
LED
GND
R513
1k
R511
1k
R594
680ohm
R527
680ohm
5 %
0805
0603
COMMON
LED POR IS NOT FIXED
FAN_LED_VDD
R525
10k
5 %
0402
COMMON
LED_Q*
1G1D1S
Q501
2N7002W
SOT323_1G1D1S
COMMON
D
G
S
LED_431_C
U502
AZ431LBNTR-G1
SOT23
COMMON
LED_431_REF
R792
61.9ohm
1 %
0402
COMMON
R517
0ohm
COMMON
BYPASS OPTION OF LEGACY LED
LED_G
1G1D1S
Q502
LS3018NG-3T3R
SOT323_1G1D1S
COMMON
GPIO35_NORTH_LOGO_LED_DRV
IN
26
R1914
100k
5 %
0402
COMMON
GND

DUAL FAN 4-PIN HEADERS

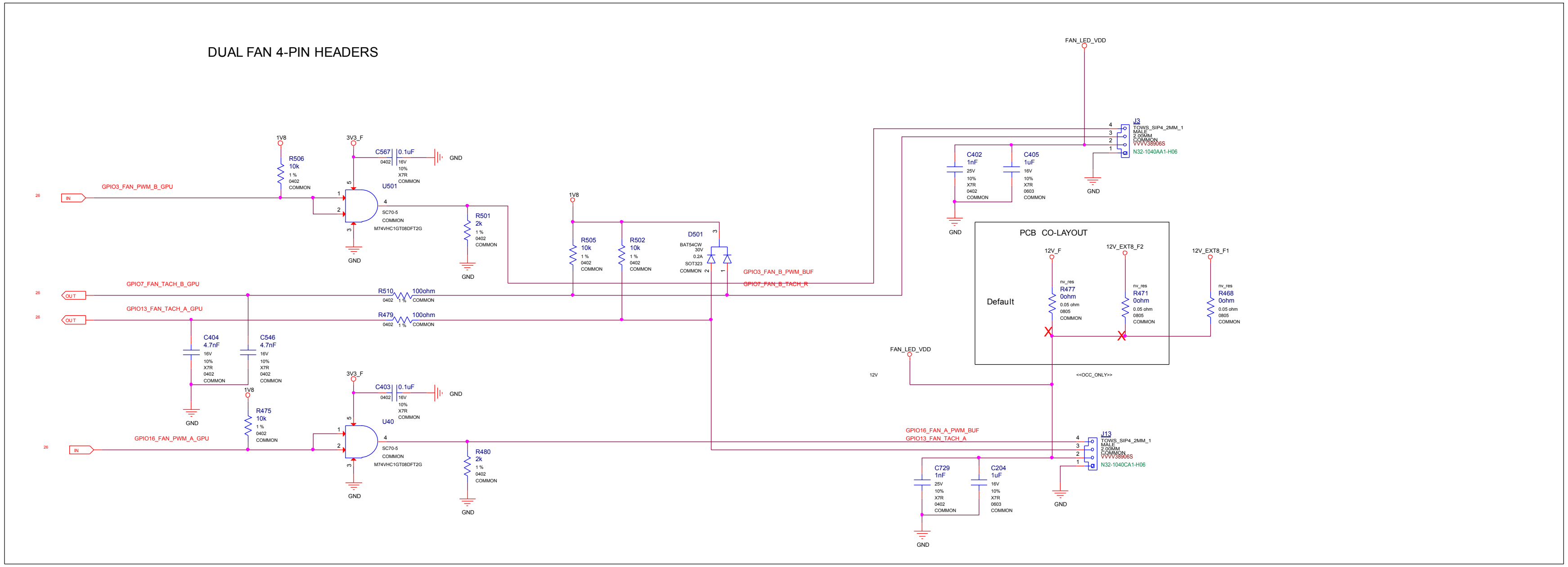
FAN_LED_VDD
J3
TOWS_SIP4_2MM_1
MALE
2.00MM
COMMON
VVVV38906S
N32-1040AA1-H06
GND
C402
1nF
25V
10%
X7R
0402
COMMON
C405
1uF
16V
10%
X7R
0603
COMMON
GND
PCB CO-LAYOUT
Default
12V_F
12V_EXT8_F2
12V_EXT8_F1
R477
0ohm
R471
0ohm
R468
0ohm
0.05 ohm
0805
COMMON
1V8
3V3_F
C567
0.1uF
16V
10%
X7R
COMMON
GND
R506
10k
1 %
0402
COMMON
U501
SC70-5
COMMON
M74VHC1G T08DFT2G
GPIO3_FAN_PWM_B_GPU
IN
26
R501
2k
1 %
0402
COMMON
GND
1V8
R505
10k
R502
10k
D501
BAT54CW
30V
0.2A
SOT323
COMMON
GPIO3_FAN_B_PWM_BUF
GPIO7_FAN_B_TACH_R
GPIO7_FAN_TACH_B_GPU
OUT
R510
100ohm
GPIO13_FAN_TACH_A_GPU
OUT
R479
100ohm
C404
4.7nF
C546
4.7nF
16V
10%
X7R
0402
COMMON
GND
1V8
R475
10k
3V3_F
C403
0.1uF
U40
SC70-5
COMMON
M74VHC1G T08DFT2G
GPIO16_FAN_PWM_A_GPU
IN
26
R480
2k
GND
FAN_LED_VDD
12V
<<OCC_ONLY>>
GPIO16_FAN_A_PWM_BUF
GPIO13_FAN_TACH_A
J13
TOWS_SIP4_2MM_1
MALE
2.00MM
COMMON
VVVV38906S
N32-1040CA1-H06
C729
1nF
25V
C204
1uF
16V
GND

MICRO-STAR INT'L CO.,LTD

MS-V389

Size	Document Description	Rev
Custom	MISC: LED & FAN	1.1

Date: Thursday, July 23, 2020 Sheet 75 of 76

MISC: RGBW LED REF

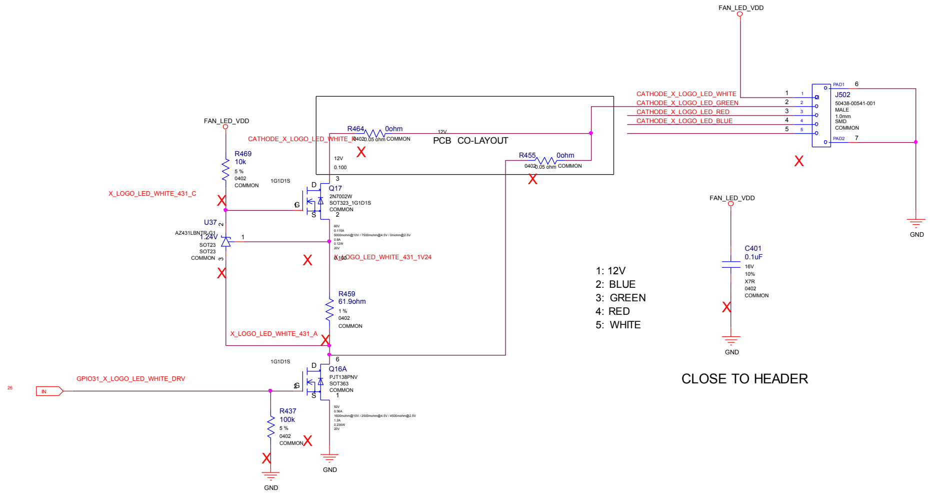
FAN_LED_VDD
J502
50438-00541-001
MALE
1.0mm
SMD
COMMON
PAD1
PAD2
CATHODE_X_LOGO_LED_WHITE
CATHODE_X_LOGO_LED_GREEN
CATHODE_X_LOGO_LED_RED
CATHODE_X_LOGO_LED_BLUE
GND
R464 0ohm
PCB CO-LAYOUT
R455 0ohm
12V
R469 10k
5 %
0402
COMMON
Q17
2N7002W
SOT323_1G1D1S
X_LOGO_LED_WHITE_431_C
U37
AZ431LBNTR-G1
1.24V
SOT23
X_LOGO_LED_WHITE_431_1V24
R459 61.9ohm
1 %
X_LOGO_LED_WHITE_431_A
Q16A
PJT138PNV
SOT363
GPIO31_X_LOGO_LED_WHITE_DRV
IN
R437 100k
C401 0.1uF
16V
10%
X7R
0402
COMMON
1: 12V
2: BLUE
3: GREEN
4: RED
5: WHITE

CLOSE TO HEADER

WHITE DRIVE

CONNECTOR SIZE TO FIT LAYOUT
ALL CIRCUIT NO STUFF BY DEFAULT
ALINGN WITH PASH
IF ADDTIONAL POWER CONSUPTION R
NEEDED, IT SHOULD BE ON LED MOD.

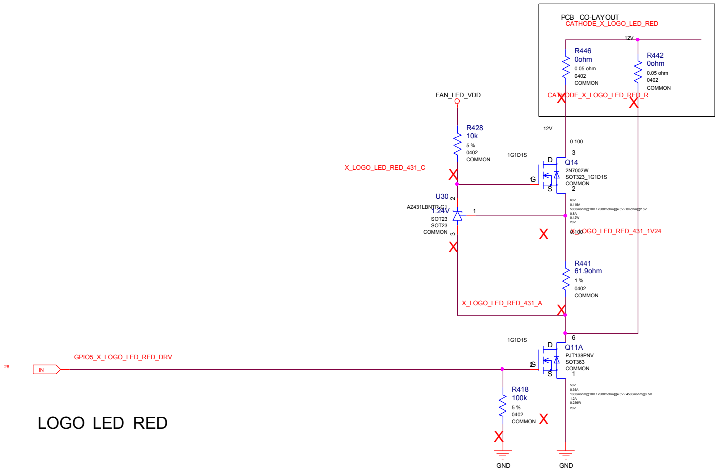
PCB CO-LAYOUT
CATHODE_X_LOGO_LED_RED
12V
R446 0ohm
R442 0ohm
CATHODE_X_LOGO_LED_RED_R
FAN_LED_VDD
R428 10k
X_LOGO_LED_RED_431_C
Q14
2N7002W
SOT323_1G1D1S
U30
AZ431LBNTR-G1
1.24V
X_LOGO_LED_RED_431_1V24
R441 61.9ohm
X_LOGO_LED_RED_431_A
Q11A
PJT138PNV
SOT363
GPIO5_X_LOGO_LED_RED_DRV
IN
R418 100k
GND

LOGO LED RED

RED DRIVE

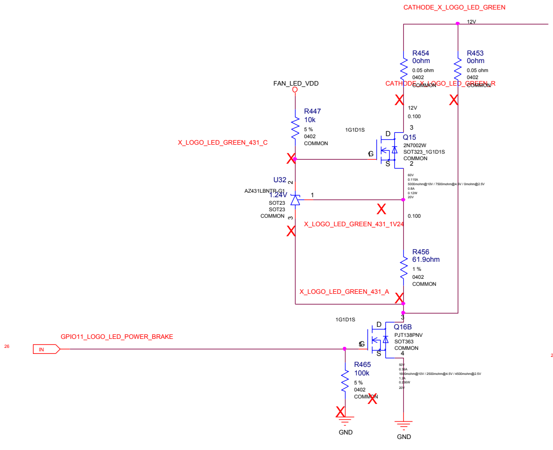
CATHODE_X_LOGO_LED_GREEN
12V
R454 0ohm
R453 0ohm
CATHODE_X_LOGO_LED_GREEN_R
FAN_LED_VDD
R447 10k
X_LOGO_LED_GREEN_431_C
Q15
2N7002W
SOT323_1G1D1S
U32
AZ431LBNTR-G1
1.24V
X_LOGO_LED_GREEN_431_1V24
R456 61.9ohm
X_LOGO_LED_GREEN_431_A
Q16B
PJT138PNV
SOT363
GPIO11_LOGO_LED_POWER_BRAKE
IN
R465 100k
GND

GREEN DRIVE

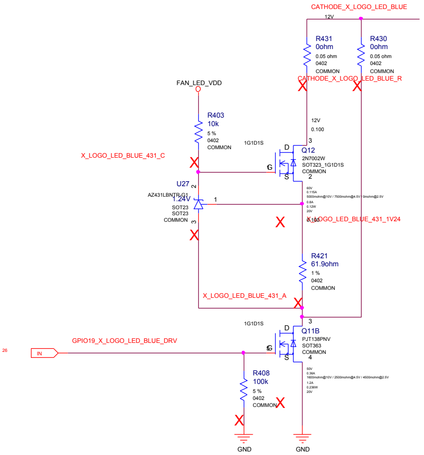
CATHODE_X_LOGO_LED_BLUE
12V
R431 0ohm
R430 0ohm
CATHODE_X_LOGO_LED_BLUE_R
FAN_LED_VDD
R403 10k
X_LOGO_LED_BLUE_431_C
Q12
2N7002W
SOT323_1G1D1S
U27
AZ431LBNTR-G1
1.24V
X_LOGO_LED_BLUE_431_1V24
R421 61.9ohm
X_LOGO_LED_BLUE_431_A
Q11B
PJT138PNV
SOT363
GPIO19_X_LOGO_LED_BLUE_DRV
IN
R408 100k
GND

BLUE DRIVE

MICRO-STAR INT'L CO.,LTD
MS-V389
Size Custom
Document Description MISC: RGBW LED REF
Rev 1.1
Date: Thursday, July 23, 2020
Sheet 76 of 76

Mechanical: Mounting holes

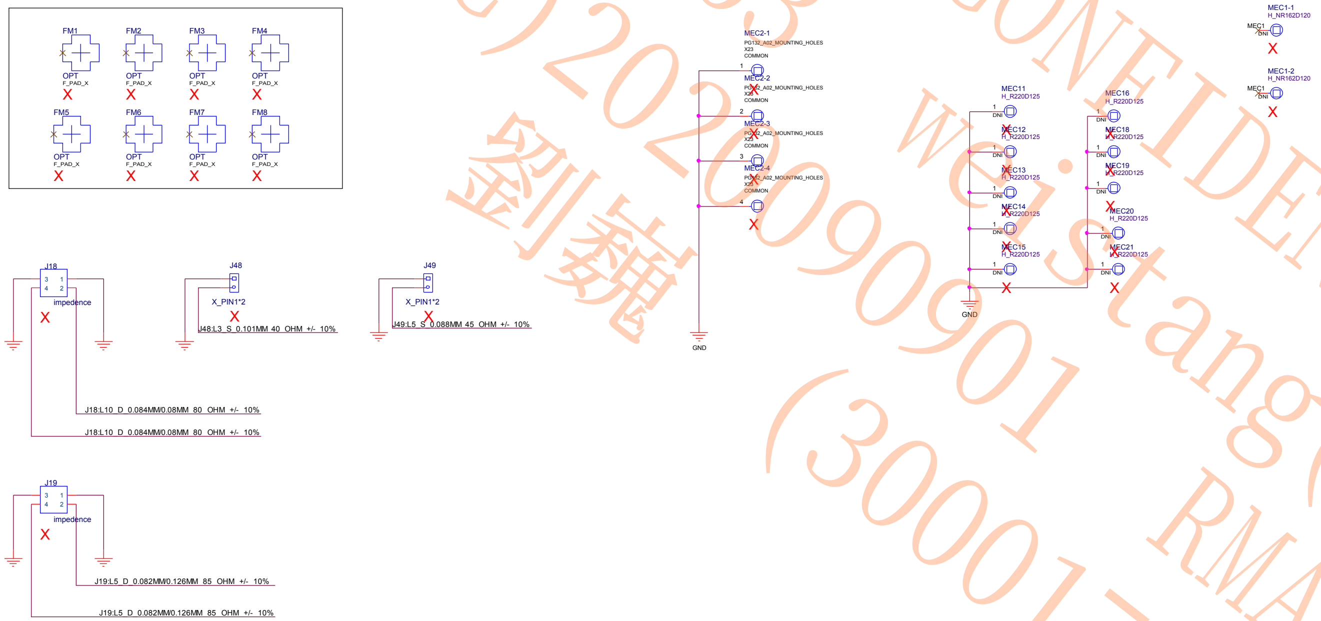
FM1
FM2
FM3
FM4
OPT
F_PAD_X
FM5
FM6
FM7
FM8
MEC2-1
PG132_A02_MOUNTING_HOLES
X23
COMMON
MEC2-2
MEC2-3
MEC2-4
1
2
3
4
GND
MEC11
H_R220D125
MEC12
MEC13
MEC14
MEC15
MEC16
MEC18
MEC19
MEC20
MEC21
DNI
MEC1-1
H_NR162D120
MEC1-2
MEC1
J18
impedence
J18:L10_D_0.084MM/0.08MM 80 OHM +/- 10%
J18:L10_D_0.084MM/0.08MM 80 OHM +/- 10%
J48
X_PIN1*2
J48:L3_S_0.101MM 40 OHM +/- 10%
J49
X_PIN1*2
J49:L5_S_0.088MM 45 OHM +/- 10%
J19
impedence
J19:L5_D_0.082MM/0.126MM 85 OHM +/- 10%
J19:L5_D_0.082MM/0.126MM 85 OHM +/- 10%

MSI CONFIDENTIAL
00205363
RD(C)20200901
劉巍
weijstang(唐浩倢)
(30001789)
RMA工程課

MICRO-STAR INT'L CO.,LTD

MS-V389

Size Custom
Document Description
Mechanical: Mounting holes
Rev 1.1

Date: Thursday, July 23, 2020
Sheet 77 of 76

VR THERMAL PROTECTION

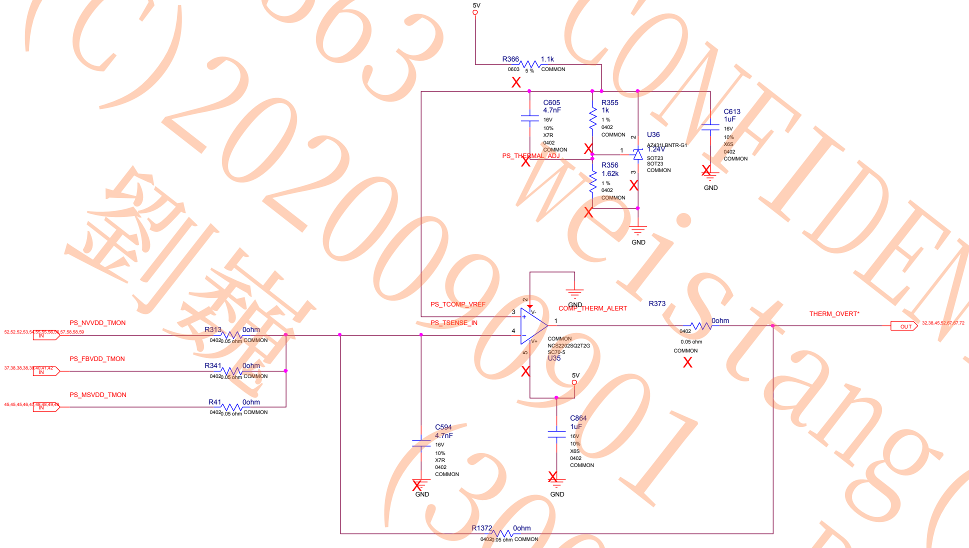
5V
R366 1.1k
0603 5 % COMMON
C605 4.7nF 16V 10% X7R 0402 COMMON
R355 1k 1 % 0402 COMMON
U36 AZ431LBNTR-G1 1.24V SOT23 SOT23 COMMON
C613 1uF 16V 10% X6S 0402 COMMON
PS_THERMAL_ADJ
R356 1.62k 1 % 0402 COMMON
GND
PS_TCOMP_VREF
PS_TSENSE_IN
COMP_THERM_ALERT
R373 0ohm 0402 0.05 ohm COMMON
THERM_OVERT*
OUT 32,38,45,52,67,67,72
COMMON NCS2202SQ2T2G SC70-5 U35
V- V+
5V
C864 1uF 16V 10% X6S 0402 COMMON
C594 4.7nF 16V 10% X7R 0402 COMMON
PS_NVVDD_TMON
52,52,52,53,54,55,55,56,56,57,58,58,59 IN
R313 0ohm 0402 0.05 ohm COMMON
PS_FBVDD_TMON
37,38,38,38,39,40,41,42 IN
R341 0ohm 0402 0.05 ohm COMMON
PS_MSVDD_TMON
45,45,45,46,47,48,48,49,49 IN
R41 0ohm 0402 0.05 ohm COMMON
R1372 0ohm 0402 0.05 ohm COMMON
1 2 3 4 5

MSI CONFIDENTIAL
00205363 weistang(唐浩倢) RMA工程課
RD(C)20200901 劉蘋(30001789)

MICRO-STAR INT'L CO.,LTD

MS-V389

Size Custom

Document Description VR THERMAL PROTECTION

Rev 1.1

Date: Thursday, July 23, 2020

Sheet 78 of 76

PCI TERM

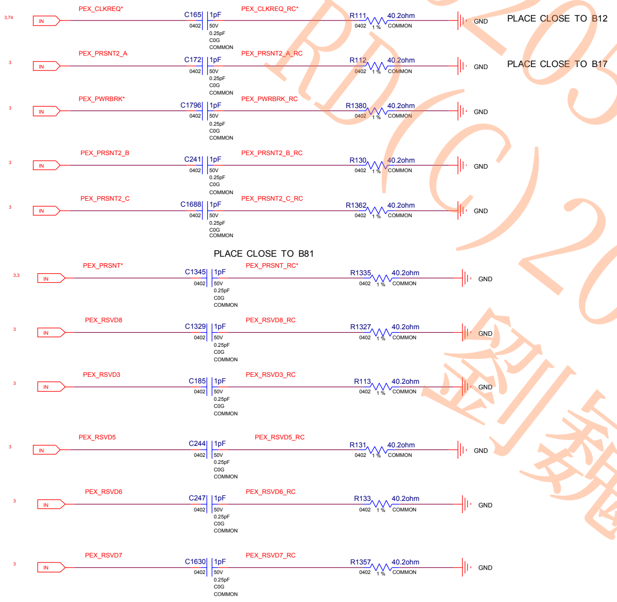
3,74
IN
PEX_CLKREQ*
C165
0402
1pF
50V
0.25pF
C0G
COMMON
PEX_CLKREQ_RC*
R111
0402
1 %
40.2ohm
COMMON
GND
PLACE CLOSE TO B12
3
IN
PEX_PRSNT2_A
C172
0402
1pF
50V
0.25pF
C0G
COMMON
PEX_PRSNT2_A_RC
R112
0402
1 %
40.2ohm
COMMON
GND
PLACE CLOSE TO B17
3
IN
PEX_PWRBRK*
C1796
0402
1pF
50V
0.25pF
C0G
COMMON
PEX_PWRBRK_RC
R1380
0402
1 %
40.2ohm
COMMON
GND
3
IN
PEX_PRSNT2_B
C241
0402
1pF
50V
0.25pF
C0G
COMMON
PEX_PRSNT2_B_RC
R130
0402
1 %
40.2ohm
COMMON
GND
3
IN
PEX_PRSNT2_C
C1688
0402
1pF
50V
0.25pF
C0G
COMMON
PEX_PRSNT2_C_RC
R1362
0402
1 %
40.2ohm
COMMON
GND
PLACE CLOSE TO B81
3,3
IN
PEX_PRSNT*
C1345
0402
1pF
50V
0.25pF
C0G
COMMON
PEX_PRSNT_RC*
R1335
0402
1 %
40.2ohm
COMMON
GND
3
IN
PEX_RSVD8
C1329
0402
1pF
50V
0.25pF
C0G
COMMON
PEX_RSVD8_RC
R1327
0402
1 %
40.2ohm
COMMON
GND
3
IN
PEX_RSVD3
C185
0402
1pF
50V
0.25pF
C0G
COMMON
PEX_RSVD3_RC
R113
0402
1 %
40.2ohm
COMMON
GND
3
IN
PEX_RSVD5
C244
0402
1pF
50V
0.25pF
C0G
COMMON
PEX_RSVD5_RC
R131
0402
1 %
40.2ohm
COMMON
GND
3
IN
PEX_RSVD6
C247
0402
1pF
50V
0.25pF
C0G
COMMON
PEX_RSVD6_RC
R133
0402
1 %
40.2ohm
COMMON
GND
3
IN
PEX_RSVD7
C1630
0402
1pF
50V
0.25pF
C0G
COMMON
PEX_RSVD7_RC
R1357
0402
1 %
40.2ohm
COMMON
GND

MSI CONFIDENTIAL
00205363 劉巍
RD(C)20200901 (30001789)
weistang(唐浩健) RMA工程課

MICRO-STAR INT'L CO.,LTD

MS-V389

Size	Document Description	Rev
Custom	PCI TERM	1.1

Date: Thursday, July 23, 2020