PG611 A00

12GB GDDR5X, 384b, 256Mx32
TALL DVI-D + DP + DP + HDMI/DP + DP

TABLE OF CONTENTS

Page	Description
1	Table of Contents
2	BLOCK DIAGRAM
3	PCI EXPRESS
4	MEMORY: GPU PARTITION A/B
5	MEMORY: FBA PARTITION[31:0]
6	MEMORY: FBA PARTITION[63:32]
7	MEMORY: FBB PARTITION[31:0]
8	MEMORY: FBB PARTITION[63:31]
9	MEMORY: GPU PARTITION C/D
10	MEMORY: FBC PARTITION[31:0]
11	MEMORY: FBC PARTITION[63:32]
12	MEMORY: FBD PARTITION[31:0]
13	MEMORY: FBD PARTITION[63:32]
14	MEMORY: GPU PARTITION E/F
15	MEMORY: FBE PARTITION[31:0]
16	MEMORY: FBE PARTITION[63:32]
17	MEMORY: FBF PARTITION[31:0]
18	MEMORY: FBF PARTITION[63:32]
19	GPU PWR AND GND
20	GPU DECOUPLING
21	IFPAB DVI-D-DL
22	IFPE DP
23	IFPF DP
24	IFPC HDMI/DP
25	IFPD DP

Page	Description
26	MIOA/B INTERFACE & FRAME LOCK
27	MISC: FAN, THERMAL, JTAG, GPIO, STEREO
28	MISC: ROM, STRAPS
29	MISC: XTAL, PLL
30	PS: 5V, PEXVDD
31	PS: 1V8 Rails
32	PS: FBVDDQ
33	PS: NVVDD Controller_OVR8
34	PS: NVVDD Controller_PWR-MODULE
35	PS: NVVDD Phase 1, 2
36	PS: NVVDD Phase 3, 4
37	PS: NVVDD Phase 5
38	PS: NVVDD Phase 6, 7
39	PS: Dynamic power balance phase
40	PS: Dynamic power balance logic
41	PS: Input, filtering, and Monitoring
42	PS: Current Sterring, Hot Unplug
43	PS: NVVDD ENABLE
44	PS: GC6 MISC
45	GEFORCE LED AND SLI LED
46	PS: NV3V3, NV12V
47	PS: MCU
48	MECH
49	VR Thermal Protection

MSI
MICRO-STAR INT'L CO.,LTD
MS-V360
Size Custom
Document Description Table of Contents
Rev 2.0
Date: Friday, March 03, 2017
Sheet 1 of 50

Page2: Block Diagram

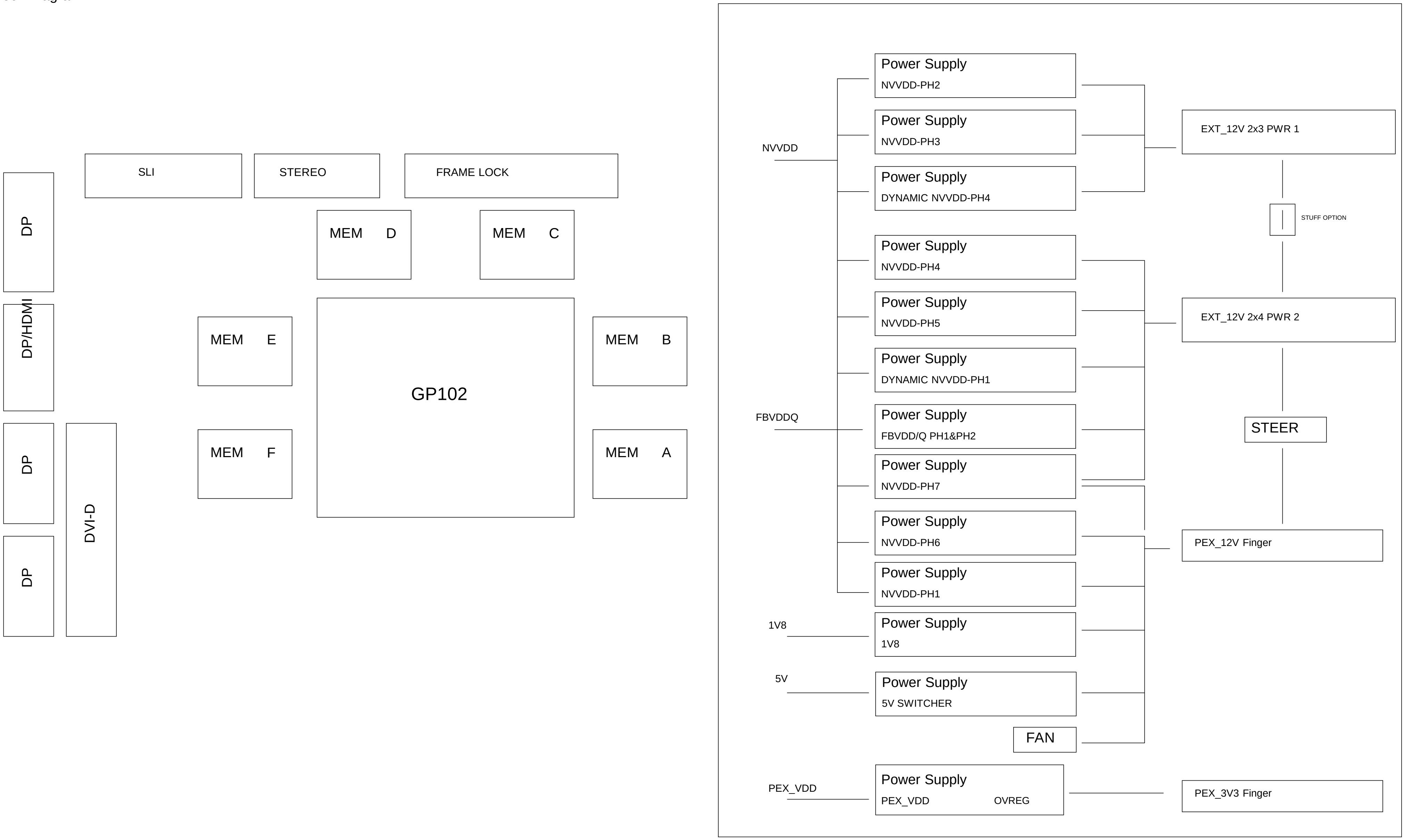
SLI
STEREO
FRAME LOCK
DP
DP/HDMI
DP
DP
DVI-D
MEM D
MEM C
MEM E
MEM B
MEM F
MEM A
GP102
NVVDD
FBVDDQ
1V8
5V
PEX_VDD
Power Supply
NVVDD-PH2
Power Supply
NVVDD-PH3
Power Supply
DYNAMIC NVVDD-PH4
Power Supply
NVVDD-PH4
Power Supply
NVVDD-PH5
Power Supply
DYNAMIC NVVDD-PH1
Power Supply
FBVDD/Q PH1&PH2
Power Supply
NVVDD-PH7
Power Supply
NVVDD-PH6
Power Supply
NVVDD-PH1
Power Supply
1V8
Power Supply
5V SWITCHER
FAN
Power Supply
PEX_VDD
OVREG
EXT_12V 2x3 PWR 1
STUFF OPTION
EXT_12V 2x4 PWR 2
STEER
PEX_12V Finger
PEX_3V3 Finger

MICRO-STAR INT'L CO.,LTD
MS-V360

Size	Document Description	Rev
Custom	Block Diagram	2.0

Date: Friday, March 03, 2017
Sheet 2 of 50

Page3: PCI Express

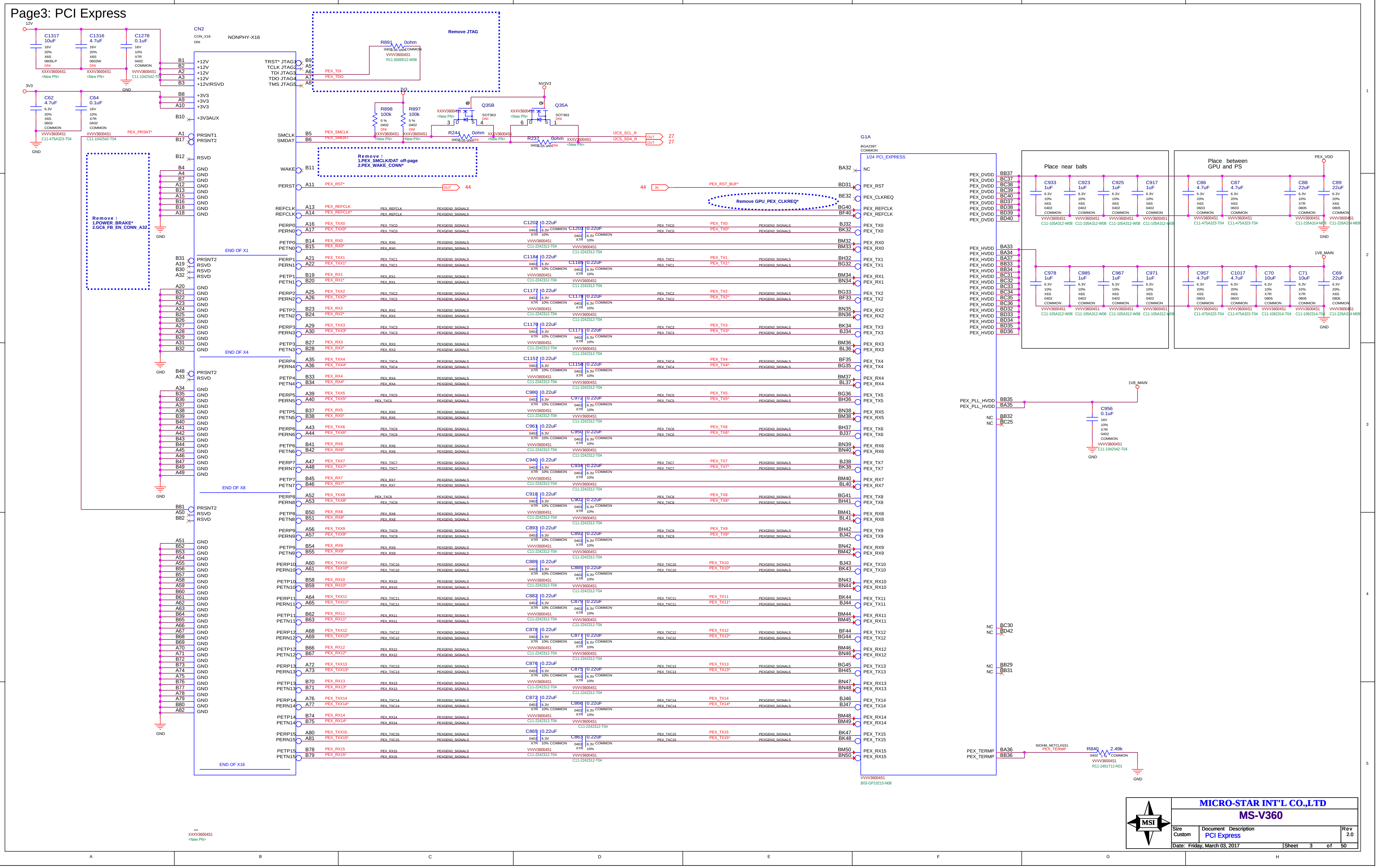
12V
C1317 10uF
C1316 4.7uF
C1278 0.1uF
3V3
C62 4.7uF
C64 0.1uF
GND
CN2
CON_X16
DNI
NONPHY-X16
+12V
+12V/RSVD
+3V3
+3V3AUX
PRSNT1
PRSNT2
RSVD
GND
TRST* JTAG1
TCLK JTAG2
TDI JTAG3
TDO JTAG4
TMS JTAG5
PEX_TDI
PEX_TDO
SMCLK
SMDAT
PEX_SMCLK
PEX_SMDAT
WAKE
PERST
PEX_RST*
REFCLK
PEX_REFCLK
PEX_REFCLK*
PEX_PRSNT*
Remove JTAG
R891 0ohm
R898 100k
R897 100k
R244 0ohm
R237 0ohm
Q35B
Q35A
SOT363
NV3V3
I2CS_SCL_R
I2CS_SDA_R
27
Remove :
1.PEX_SMCLK/DAT off-page
2.PEX_WAKE_CONN*
Remove :
1.POWER_BRAKE*
2.GC6_FB_EN_CONN_A32
END OF X1
END OF X4
END OF X8
END OF X16
44
PEX_RST_BUF*
Remove GPU_PEX_CLKREQ*
PEXGEN3_SIGNALS
0.22uF
G1A
BGA2397
COMMON
1/24 PCI_EXPRESS
NC
PEX_RST
PEX_CLKREQ
PEX_REFCLK
PEX_TX0 … PEX_TX15
PEX_RX0 … PEX_RX15
PEX_DVDD
PEX_HVDD
PEX_PLL_HVDD
PEX_TERMP
Place near balls
Place between GPU and PS
PEX_VDD
1V8_MAIN
C933 1uF
C923 1uF
C925 1uF
C917 1uF
C86 4.7uF
C87 4.7uF
C88 22uF
C89 22uF
C978 1uF
C985 1uF
C967 1uF
C971 1uF
C957 4.7uF
C1017 4.7uF
C70 10uF
C71 10uF
C69 22uF
C956 0.1uF
R840 2.49k
50OHM_NETCLASS1
B03-GP10215-N08

MICRO-STAR INT'L CO.,LTD

MS-V360

Size	Document Description	Rev
Custom	PCI Express	2.0

Date: Friday, March 03, 2017 | Sheet 3 of 50

Page4: MEMORY: GPU Partition A/B

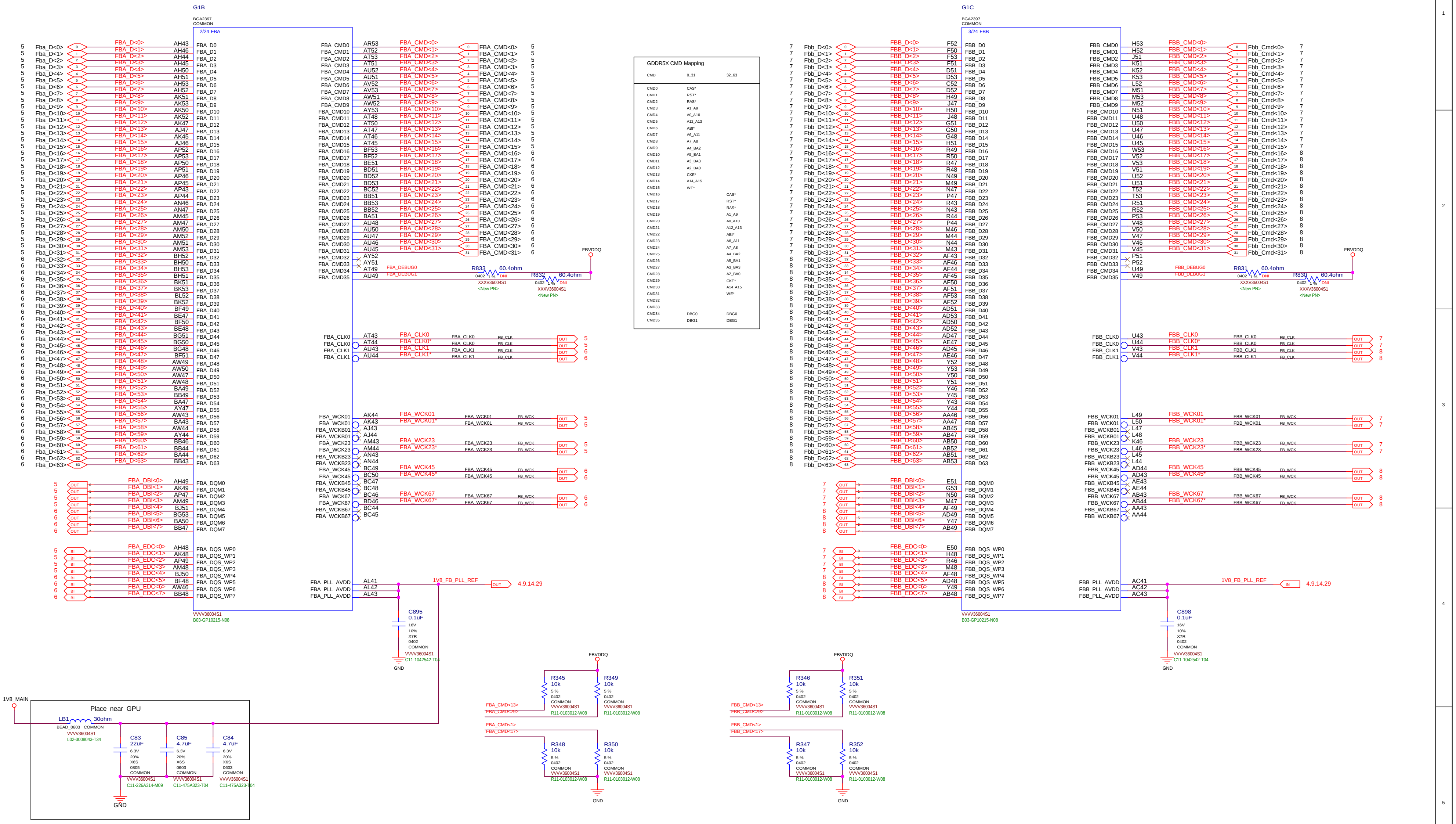
G1B
BGA2397
COMMON
2/24 FBA
FBA_D<0> … FBA_D<63>
FBA_CMD<0> … FBA_CMD<31>
FBA_DEBUG0
R833 60.4ohm
R832 60.4ohm
DNI
XXXV36004S1
<New PN>
FBVDDQ
FBA_CLK0
FBA_CLK0*
FBA_CLK1
FBA_CLK1*
FBA_WCK01
FBA_WCK01*
FBA_WCK23
FBA_WCK23*
FBA_WCK45
FBA_WCK45*
FBA_WCK67
FBA_WCK67*
FBA_DBI<0> … FBA_DBI<7>
FBA_EDC<0> … FBA_EDC<7>
FBA_PLL_AVDD
1V8_FB_PLL_REF
4,9,14,29
C895 0.1uF 16V 10% X7R 0402 COMMON
VVVV36004S1
C11-1042542-T04
GND
B03-GP10215-N08
G1C
BGA2397
COMMON
3/24 FBB
FBB_D<0> … FBB_D<63>
FBB_CMD<0> … FBB_CMD<31>
FBB_DEBUG0
R831 60.4ohm
R830 60.4ohm
FBB_CLK0
FBB_CLK0*
FBB_CLK1
FBB_CLK1*
FBB_WCK01
FBB_WCK01*
FBB_WCK23
FBB_WCK23*
FBB_WCK45
FBB_WCK45*
FBB_WCK67
FBB_WCK67*
FBB_DBI<0> … FBB_DBI<7>
FBB_EDC<0> … FBB_EDC<7>
FBB_PLL_AVDD
C898 0.1uF 16V 10% X7R 0402 COMMON
R345 10k
R349 10k
R348 10k
R350 10k
R346 10k
R351 10k
R347 10k
R352 10k
5 %
0402
COMMON
R11-0103012-W08
FBA_CMD<13>
FBA_CMD<29>
FBA_CMD<1>
FBA_CMD<17>
FBB_CMD<13>
FBB_CMD<29>
FBB_CMD<1>
FBB_CMD<17>
1V8_MAIN
Place near GPU
LB1 30ohm
BEAD_0603 COMMON
L02-3008043-T34
C83 22uF 6.3V 20% X6S 0805 COMMON
C11-226A314-M09
C85 4.7uF 6.3V 20% X6S 0603 COMMON
C11-475A323-T04
C84 4.7uF 6.3V 20% X6S 0603 COMMON
C11-475A323-T04

GDDR5X CMD Mapping

CMD	0..31	32..63
CMD0	CAS*	
CMD1	RST*	
CMD2	RAS*	
CMD3	A1_A9	
CMD4	A0_A10	
CMD5	A12_A13	
CMD6	ABI*	
CMD7	A6_A11	
CMD8	A7_A8	
CMD9	A4_BA2	
CMD10	A5_BA1	
CMD11	A3_BA3	
CMD12	A2_BA0	
CMD13	CKE*	
CMD14	A14_A15	
CMD15	WE*	
CMD16		CAS*
CMD17		RST*
CMD18		RAS*
CMD19		A1_A9
CMD20		A0_A10
CMD21		A12_A13
CMD22		ABI*
CMD23		A6_A11
CMD24		A7_A8
CMD25		A4_BA2
CMD26		A5_BA1
CMD27		A3_BA3
CMD28		A2_BA0
CMD29		CKE*
CMD30		A14_A15
CMD31		WE*
CMD32		
CMD33		
CMD34	DBG0	DBG0
CMD35	DBG1	DBG1

MICRO-STAR INT'L CO.,LTD

MS-V360

Size	Document Description	Rev
Custom	MEMORY: GPU Partition A/B	2.0

Date: Friday, March 03, 2017 | Sheet 4 of 50

Page5: MEMORY: FBA Partition 31..0

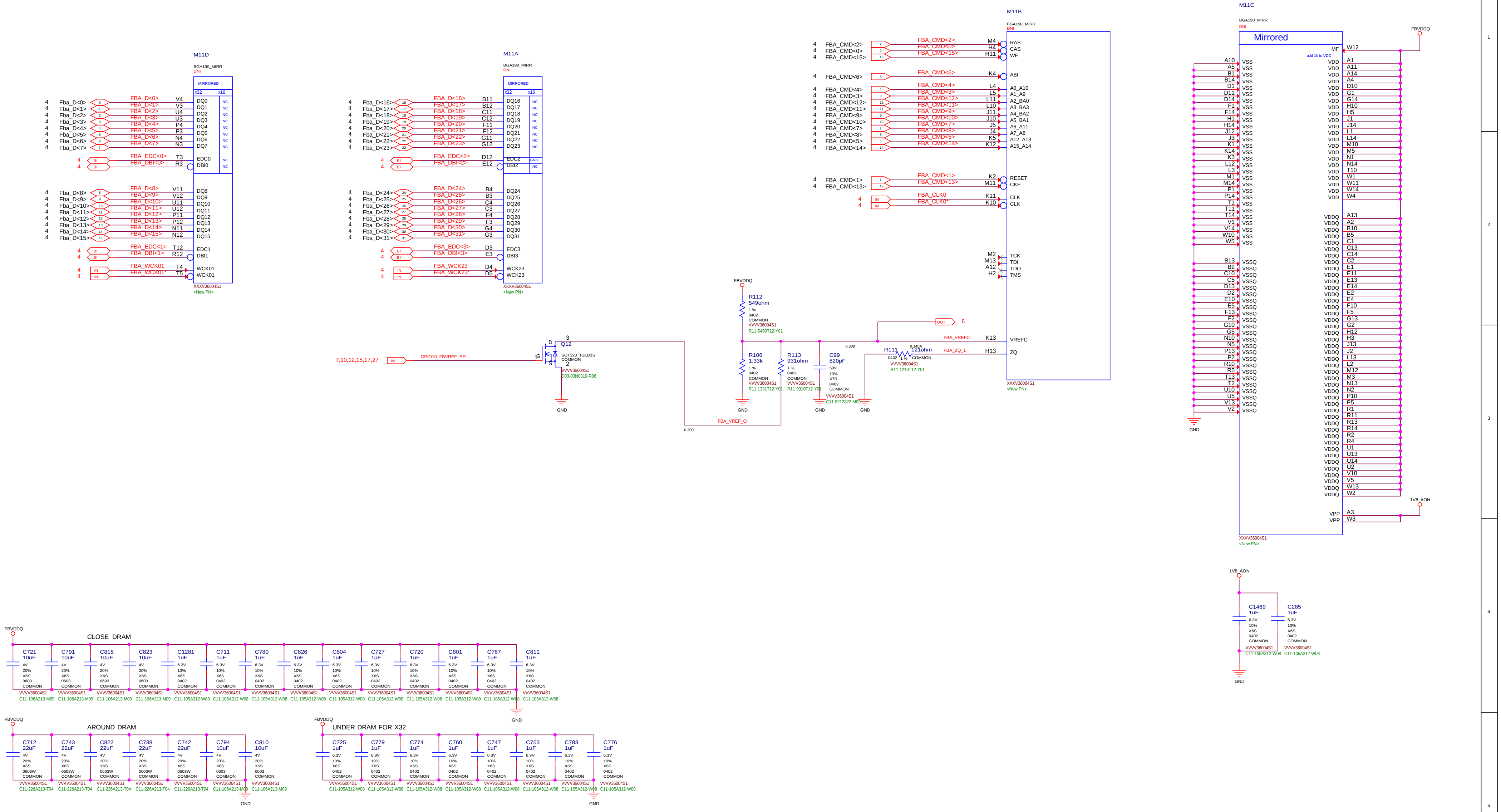
M11D
BGA190_MIRR
DNI
MIRRORED
x32 x16
Fba_D<0> … Fba_D<7>
FBA_D<0> … FBA_D<7>
V4 V3 U4 U3 P4 P3 N4 N3
DQ0 DQ1 DQ2 DQ3 DQ4 DQ5 DQ6 DQ7
NC
FBA_EDC<0> T3 EDC0
FBA_DBI<0> R3 DBI0
Fba_D<8> … Fba_D<15>
FBA_D<8> … FBA_D<15>
V11 V12 U11 U12 P11 P12 N11 N12
DQ8 DQ9 DQ10 DQ11 DQ12 DQ13 DQ14 DQ15
FBA_EDC<1> T12 EDC1
FBA_DBI<1> R12 DBI1
FBA_WCK01 T4 WCK01
FBA_WCK01* T5 WCK01
XXXV36004S1
<New PN>
M11A
BGA190_MIRR
DNI
MIRRORED
Fba_D<16> … Fba_D<23>
FBA_D<16> … FBA_D<23>
B11 B12 C11 C12 F11 F12 G11 G12
DQ16 DQ17 DQ18 DQ19 DQ20 DQ21 DQ22 DQ23
FBA_EDC<2> D12 EDC2
FBA_DBI<2> E12 DBI2
GND
Fba_D<24> … Fba_D<31>
FBA_D<24> … FBA_D<31>
B4 B3 C4 C3 F4 F3 G4 G3
DQ24 DQ25 DQ26 DQ27 DQ28 DQ29 DQ30 DQ31
FBA_EDC<3> D3 EDC3
FBA_DBI<3> E3 DBI3
FBA_WCK23 D4 WCK23
FBA_WCK23* D5 WCK23
XXXV36004S1
<New PN>
BI
IN
M11B
BGA190_MIRR
DNI
FBA_CMD<2> M4 RAS
FBA_CMD<0> H4 CAS
FBA_CMD<15> H11 WE
FBA_CMD<6> K4 ABI
FBA_CMD<4> L4 A0_A10
FBA_CMD<3> L5 A1_A9
FBA_CMD<12> L11 A2_BA0
FBA_CMD<11> L10 A3_BA3
FBA_CMD<9> J11 A4_BA2
FBA_CMD<10> J10 A5_BA1
FBA_CMD<7> J5 A6_A11
FBA_CMD<8> J4 A7_A8
FBA_CMD<5> K5 A12_A13
FBA_CMD<14> K12 A15_A14
FBA_CMD<1> K2 RESET
FBA_CMD<13> M11 CKE
FBA_CLK0 K11 CLK
FBA_CLK0* K10 CLK
M2 TCK
M13 TDI
A12 TDO
H2 TMS
FBA_VREFC K13 VREFC
FBA_ZQ_1 H13 ZQ
XXXV36004S1
<New PN>
FBVDDQ
R112
549ohm
1 %
0402
COMMON
VVVV36004S1
R11-5490T12-Y01
OUT 6
0.300
R111 121ohm
0.140A
0402 1 % COMMON
VVVV36004S1
R11-1210T12-Y01
R106
1.33k
1 %
0402
COMMON
VVVV36004S1
R11-1331T12-Y01
R113
931ohm
1 %
0402
COMMON
VVVV36004S1
R11-9310T12-Y01
C99
820pF
50V
10%
X7R
0402
COMMON
VVVV36004S1
C11-8212822-M09
GND
FBA_VREF_Q
0.300
7,10,12,15,17,27
IN
GPIO10_FBVREF_SEL
Q12
SOT323_1G1D1S
COMMON
VVVV36004S1
D03-03N0310-R06
3 D
G
S 2
M11C
BGA190_MIRR
DNI
Mirrored
MF W12
add 1k to VDD
FBVDDQ
VSS: A10 A5 B1 B14 D1 D11 D14 F1 F14 H1 H14 J12 J3 K1 K14 K3 L12 L3 M1 M14 P1 P14 T1 T11 T14 V1 V14 W10 W5
VDD: A1 A11 A14 A4 D10 G1 G14 H10 H5 J1 J14 L1 L14 M10 M5 N1 N14 T10 W1 W11 W14 W4
VSSQ: B13 B2 C10 C5 D13 D2 E10 E5 F13 F2 G10 G5 N10 N5 P13 P2 R10 R5 T13 T2 U10 U5 V13 V2
VDDQ: A13 A2 B10 B5 C1 C13 C14 C2 E1 E11 E13 E14 E2 E4 F10 F5 G13 G2 H12 H3 J13 J2 L13 L2 M12 M3 N13 N2 P10 P5 R1 R11 R13 R14 R2 R4 U1 U13 U14 U2 V10 V5 W13 W2
VPP A3
VPP W3
1V8_AON
XXXV36004S1
<New PN>
GND
1V8_AON
C1469 1uF 6.3V 10% X6S 0402 COMMON VVVV36004S1 C11-105A312-W08
C285 1uF 6.3V 10% X6S 0402 COMMON VVVV36004S1 C11-105A312-W08
GND
FBVDDQ
CLOSE DRAM
C721 10uF 4V 20% X6S 0603 COMMON VVVV36004S1 C11-106A213-M09
C791 10uF 4V 20% X6S 0603 COMMON VVVV36004S1 C11-106A213-M09
C815 10uF 4V 20% X6S 0603 COMMON VVVV36004S1 C11-106A213-M09
C823 10uF 4V 20% X6S 0603 COMMON VVVV36004S1 C11-106A213-M09
C1281 1uF 6.3V 10% X6S 0402 COMMON VVVV36004S1 C11-105A312-W08
C711 1uF 6.3V 10% X6S 0402 COMMON VVVV36004S1 C11-105A312-W08
C780 1uF 6.3V 10% X6S 0402 COMMON VVVV36004S1 C11-105A312-W08
C826 1uF 6.3V 10% X6S 0402 COMMON VVVV36004S1 C11-105A312-W08
C804 1uF 6.3V 10% X6S 0402 COMMON VVVV36004S1 C11-105A312-W08
C727 1uF 6.3V 10% X6S 0402 COMMON VVVV36004S1 C11-105A312-W08
C720 1uF 6.3V 10% X6S 0402 COMMON VVVV36004S1 C11-105A312-W08
C801 1uF 6.3V 10% X6S 0402 COMMON VVVV36004S1 C11-105A312-W08
C767 1uF 6.3V 10% X6S 0402 COMMON VVVV36004S1 C11-105A312-W08
C811 1uF 6.3V 10% X6S 0402 COMMON VVVV36004S1 C11-105A312-W08
GND
FBVDDQ
AROUND DRAM
C712 22uF 4V 20% X6S 0603W COMMON VVVV36004S1 C11-226A213-T04
C743 22uF 4V 20% X6S 0603W COMMON VVVV36004S1 C11-226A213-T04
C822 22uF 4V 20% X6S 0603W COMMON VVVV36004S1 C11-226A213-T04
C738 22uF 4V 20% X6S 0603W COMMON VVVV36004S1 C11-226A213-T04
C742 22uF 4V 20% X6S 0603W COMMON VVVV36004S1 C11-226A213-T04
C794 10uF 4V 20% X6S 0603 COMMON VVVV36004S1 C11-106A213-M09
C810 10uF 4V 20% X6S 0603 COMMON VVVV36004S1 C11-106A213-M09
GND
FBVDDQ
UNDER DRAM FOR X32
C725 1uF 6.3V 10% X6S 0402 COMMON VVVV36004S1 C11-105A312-W08
C779 1uF 6.3V 10% X6S 0402 COMMON VVVV36004S1 C11-105A312-W08
C774 1uF 6.3V 10% X6S 0402 COMMON VVVV36004S1 C11-105A312-W08
C760 1uF 6.3V 10% X6S 0402 COMMON VVVV36004S1 C11-105A312-W08
C747 1uF 6.3V 10% X6S 0402 COMMON VVVV36004S1 C11-105A312-W08
C753 1uF 6.3V 10% X6S 0402 COMMON VVVV36004S1 C11-105A312-W08
C783 1uF 6.3V 10% X6S 0402 COMMON VVVV36004S1 C11-105A312-W08
C776 1uF 6.3V 10% X6S 0402 COMMON VVVV36004S1 C11-105A312-W08
GND

MSI

MICRO-STAR INT'L CO.,LTD

MS-V360

Size	Document Description	Rev
Custom	MEMORY: FBA Partition 31..0	2.0
Date: Friday, March 03, 2017	Sheet 5 of 50	

Page6: MEMORY: FBA Partition 63..32

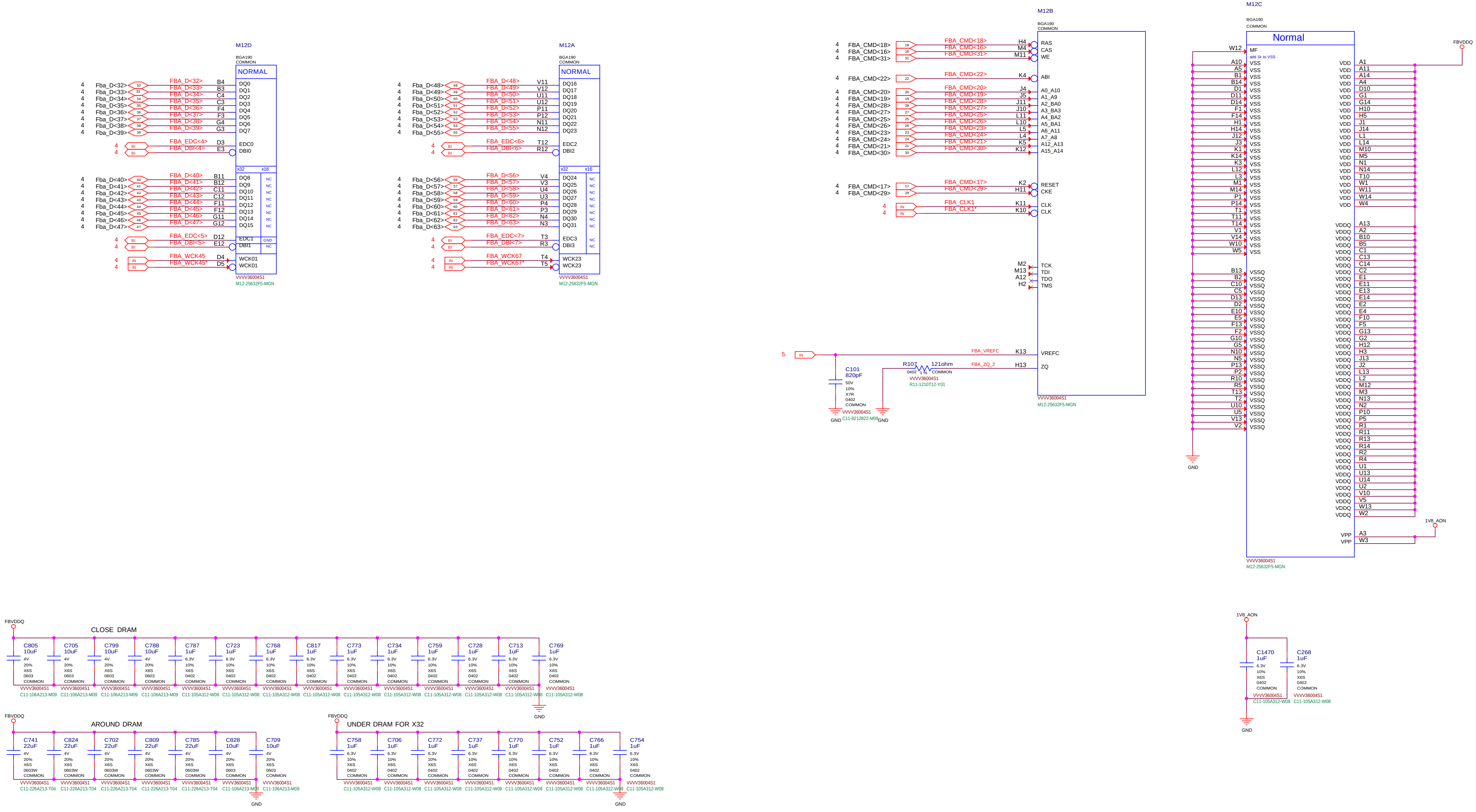
M12D
BGA190 COMMON
NORMAL
Fba_D<32>…Fba_D<47>
FBA_D<32> B4 DQ0
FBA_D<33> B3 DQ1
FBA_D<34> C4 DQ2
FBA_D<35> C3 DQ3
FBA_D<36> F4 DQ4
FBA_D<37> F3 DQ5
FBA_D<38> G4 DQ6
FBA_D<39> G3 DQ7
FBA_EDC<4> D3 EDC0
FBA_DBI<4> E3 DBI0
x32 x16
FBA_D<40> B11 DQ8
FBA_D<41> B12 DQ9
FBA_D<42> C11 DQ10
FBA_D<43> C12 DQ11
FBA_D<44> F11 DQ12
FBA_D<45> F12 DQ13
FBA_D<46> G11 DQ14
FBA_D<47> G12 DQ15
FBA_EDC<5> D12 EDC1
FBA_DBI<5> E12 DBI1
FBA_WCK45 D4 WCK01
FBA_WCK45* D5 WCK01
NC
GND
VVVV36004S1
M12-25632F5-MGN
M12A
BGA190 COMMON
NORMAL
Fba_D<48>…Fba_D<63>
FBA_D<48> V11 DQ16
FBA_D<49> V12 DQ17
FBA_D<50> U11 DQ18
FBA_D<51> U12 DQ19
FBA_D<52> P11 DQ20
FBA_D<53> P12 DQ21
FBA_D<54> N11 DQ22
FBA_D<55> N12 DQ23
FBA_EDC<6> T12 EDC2
FBA_DBI<6> R12 DBI2
FBA_D<56> V4 DQ24
FBA_D<57> V3 DQ25
FBA_D<58> U4 DQ26
FBA_D<59> U3 DQ27
FBA_D<60> P4 DQ28
FBA_D<61> P3 DQ29
FBA_D<62> N4 DQ30
FBA_D<63> N3 DQ31
FBA_EDC<7> T3 EDC3
FBA_DBI<7> R3 DBI3
FBA_WCK67 T4 WCK23
FBA_WCK67* T5 WCK23
VVVV36004S1
M12-25632F5-MGN
M12B
BGA190 COMMON
FBA_CMD<18> H4 RAS
FBA_CMD<16> M4 CAS
FBA_CMD<31> M11 WE
FBA_CMD<22> K4 ABI
FBA_CMD<20> J4 A0_A10
FBA_CMD<19> J5 A1_A9
FBA_CMD<28> J11 A2_BA0
FBA_CMD<27> J10 A3_BA3
FBA_CMD<25> L11 A4_BA2
FBA_CMD<26> L10 A5_BA1
FBA_CMD<23> L5 A6_A11
FBA_CMD<24> L4 A7_A8
FBA_CMD<21> K5 A12_A13
FBA_CMD<30> K12 A15_A14
FBA_CMD<17> K2 RESET
FBA_CMD<29> H11 CKE
FBA_CLK1 K11 CLK
FBA_CLK1* K10 CLK
M2 TCK
M13 TDI
A12 TDO
H2 TMS
FBA_VREFC K13 VREFC
FBA_ZQ_2 H13 ZQ
R107 121ohm 0402 1 % COMMON
VVVV36004S1
R11-1210T12-Y01
C101 820pF 50V 10% X7R 0402 COMMON
VVVV36004S1
C11-8212822-M09
GND
VVVV36004S1
M12-25632F5-MGN
M12C
BGA190 COMMON
Normal
W12 MF
add 1k to VSS
VSS
VSSQ
VDD
VDDQ
VPP
FBVDDQ
1V8_AON
GND
VVVV36004S1
M12-25632F5-MGN
FBVDDQ
CLOSE DRAM
C805 10uF
C705 10uF
C799 10uF
C788 10uF
C787 1uF
C723 1uF
C768 1uF
C817 1uF
C773 1uF
C734 1uF
C759 1uF
C728 1uF
C713 1uF
C769 1uF
C11-106A213-M09
C11-105A312-W08
AROUND DRAM
C741 22uF
C824 22uF
C702 22uF
C809 22uF
C785 22uF
C828 10uF
C709 10uF
C11-226A213-T04
UNDER DRAM FOR X32
C758 1uF
C706 1uF
C772 1uF
C737 1uF
C770 1uF
C752 1uF
C766 1uF
C754 1uF
1V8_AON
C1470 1uF
C268 1uF
6.3V 10% X6S 0402 COMMON
4V 20% X6S 0603 COMMON
0603W
VVVV36004S1
GND

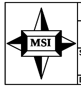

MICRO-STAR INT'L CO.,LTD

MS-V360

Size	Document Description	Rev
Custom	MEMORY: FBA Partition 63..32	2.0
Date: Friday, March 03, 2017	Sheet 6 of 50	

Page7: MEMORY: FBB Partition 31..0

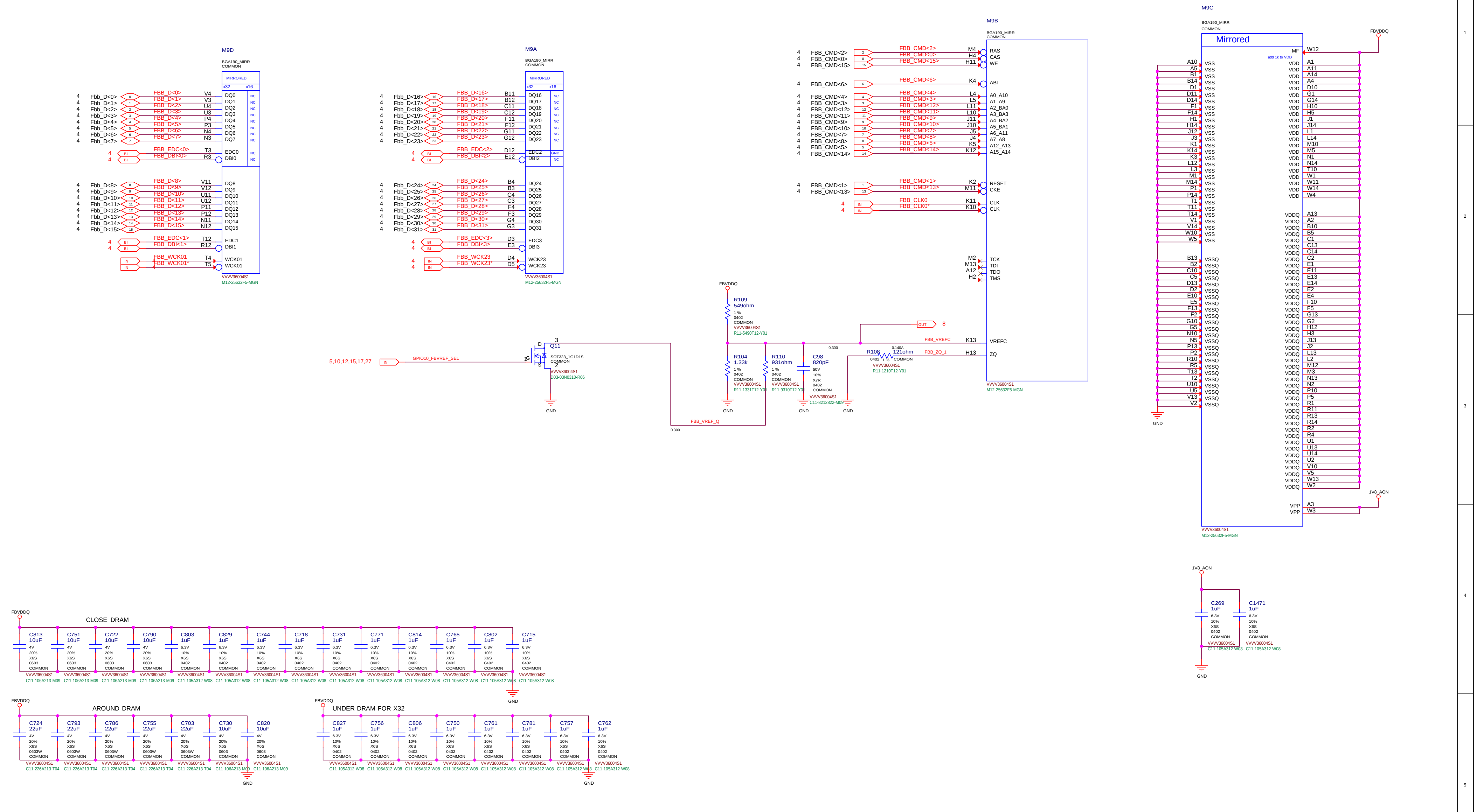
M9D
BGA190_MIRR
COMMON
MIRRORED
x32 x16
Fbb_D<0> … Fbb_D<15>
FBB_D<0> … FBB_D<15>
DQ0 … DQ15
FBB_EDC<0>
FBB_DBI<0>
FBB_EDC<1>
FBB_DBI<1>
EDC0
DBI0
EDC1
DBI1
FBB_WCK01
FBB_WCK01*
WCK01
VVVV36004S1
M12-25632F5-MGN
M9A
Fbb_D<16> … Fbb_D<31>
FBB_D<16> … FBB_D<31>
DQ16 … DQ31
FBB_EDC<2>
FBB_DBI<2>
FBB_EDC<3>
FBB_DBI<3>
FBB_WCK23
FBB_WCK23*
WCK23
M9B
FBB_CMD<0> … FBB_CMD<15>
RAS
CAS
WE
ABI
A0_A10
A1_A9
A2_BA0
A3_BA3
A4_BA2
A5_BA1
A6_A11
A7_A8
A12_A13
A15_A14
RESET
CKE
FBB_CLK0
FBB_CLK0*
CLK
TCK
TDI
TDO
TMS
FBB_VREFC
VREFC
FBB_ZQ_1
ZQ
M9C
Mirrored
MF
add 1k to VDD
VSS
VSSQ
VDD
VDDQ
VPP
FBVDDQ
1V8_AON
GND
R109 549ohm
R104 1.33k
R110 931ohm
C98 820pF
R108 121ohm
Q11
SOT323_1G1D1S
D03-03N0310-R06
GPIO10_FBVREF_SEL
5,10,12,15,17,27
FBB_VREF_Q
CLOSE DRAM
AROUND DRAM
UNDER DRAM FOR X32
C813 10uF
C751 10uF
C722 10uF
C790 10uF
C803 1uF
C829 1uF
C744 1uF
C718 1uF
C731 1uF
C771 1uF
C814 1uF
C765 1uF
C802 1uF
C715 1uF
C724 22uF
C793 22uF
C786 22uF
C755 22uF
C703 22uF
C730 10uF
C820 10uF
C827 1uF
C756 1uF
C806 1uF
C750 1uF
C761 1uF
C781 1uF
C757 1uF
C762 1uF
C269 1uF
C1471 1uF

MICRO-STAR INT'L CO.,LTD

MS-V360

Size	Document Description	Rev
Custom	MEMORY: FBB Partition 31..0	2.0

Date: Friday, March 03, 2017 Sheet 7 of 50

Page8: MEMORY: FBB Partition 63..32

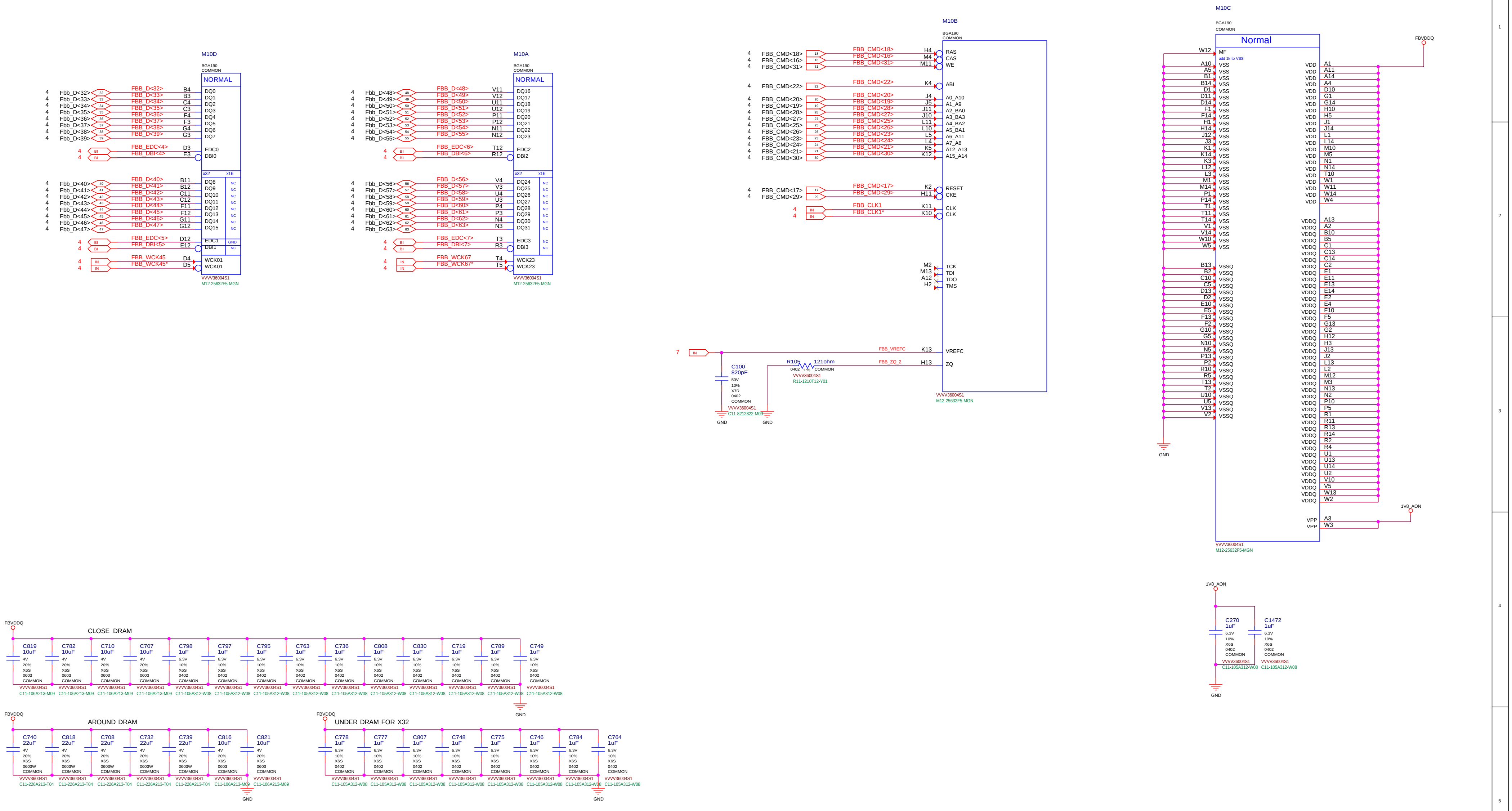
M10D
BGA190
COMMON
NORMAL
Fbb_D<32>…Fbb_D<39>
FBB_D<32>…FBB_D<39>
DQ0…DQ7
FBB_EDC<4>
FBB_DBI<4>
EDC0
DBI0
x32
x16
Fbb_D<40>…Fbb_D<47>
FBB_D<40>…FBB_D<47>
DQ8…DQ15
FBB_EDC<5>
FBB_DBI<5>
EDC1
DBI1
FBB_WCK45
FBB_WCK45*
WCK01
NC
GND
VVVV36004S1
M12-25632F5-MGN
M10A
Fbb_D<48>…Fbb_D<55>
FBB_D<48>…FBB_D<55>
DQ16…DQ23
FBB_EDC<6>
FBB_DBI<6>
EDC2
DBI2
Fbb_D<56>…Fbb_D<63>
FBB_D<56>…FBB_D<63>
DQ24…DQ31
FBB_EDC<7>
FBB_DBI<7>
EDC3
DBI3
FBB_WCK67
FBB_WCK67*
WCK23
M10B
FBB_CMD<16>…FBB_CMD<31>
RAS
CAS
WE
ABI
A0_A10
A1_A9
A2_BA0
A3_BA3
A4_BA2
A5_BA1
A6_A11
A7_A8
A12_A13
A15_A14
RESET
CKE
FBB_CLK1
FBB_CLK1*
CLK
TCK
TDI
TDO
TMS
FBB_VREFC
VREFC
FBB_ZQ_2
ZQ
R105
121ohm
0402
1%
COMMON
R11-1210T12-Y01
C100
820pF
50V
10%
X7R
0402
C11-8212822-M09
GND
M10C
Normal
MF
add 1k to VSS
VSS
VSSQ
VDD
VDDQ
VPP
FBVDDQ
1V8_AON
C270
1uF
C1472
1uF
6.3V
10%
X6S
0402
C11-105A312-W08
CLOSE DRAM
C819 10uF
C782 10uF
C710 10uF
C707 10uF
C798 1uF
C797 1uF
C795 1uF
C763 1uF
C736 1uF
C808 1uF
C830 1uF
C719 1uF
C789 1uF
C749 1uF
4V
20%
0603
C11-106A213-M09
AROUND DRAM
C740 22uF
C818 22uF
C708 22uF
C732 22uF
C739 22uF
C816 10uF
C821 10uF
0603W
C11-226A213-T04
UNDER DRAM FOR X32
C778 1uF
C777 1uF
C807 1uF
C748 1uF
C775 1uF
C746 1uF
C784 1uF
C764 1uF

MICRO-STAR INT'L CO.,LTD
MS-V360

Size	Document Description	Rev
Custom	MEMORY: FBB Partition 63..32	2.0

Date: Friday, March 03, 2017 Sheet 8 of 50

Page9: MEMORY: GPU Partition C/D

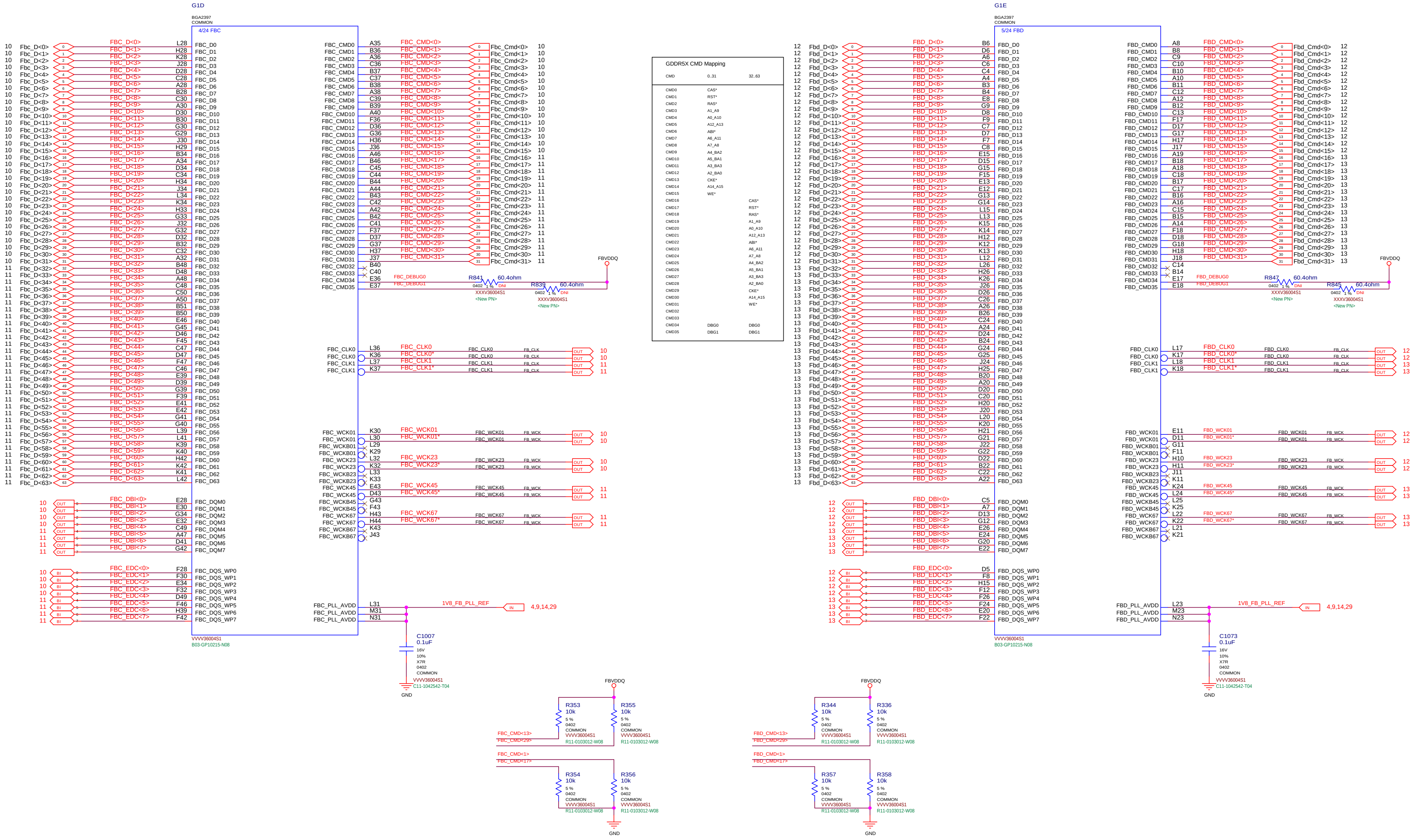
G1D
BGA2397
COMMON
4/24 FBC
FBC_D0 … FBC_D63
FBC_CMD0 … FBC_CMD35
FBC_DQM0 … FBC_DQM7
FBC_DQS_WP0 … FBC_DQS_WP7
FBC_CLK0
FBC_CLK0
FBC_CLK1
FBC_CLK1
FBC_WCK01
FBC_WCKB01
FBC_WCK23
FBC_WCKB23
FBC_WCK45
FBC_WCKB45
FBC_WCK67
FBC_WCKB67
FBC_PLL_AVDD
FBC_DEBUG0
VVVV36004S1
B03-GP10215-N08
Fbc_D<0> … Fbc_D<63>
Fbc_Cmd<0> … Fbc_Cmd<31>
FBC_DBI<0> … FBC_DBI<7>
FBC_EDC<0> … FBC_EDC<7>
R841
60.4ohm
R839
60.4ohm
0402
1 %
DNI
XXXV36004S1
<New PN>
FBVDDQ
1V8_FB_PLL_REF
4,9,14,29
C1007
0.1uF
16V
10%
X7R
0402
COMMON
VVVV36004S1
C11-1042542-T04
GND
G1E
BGA2397
COMMON
5/24 FBD
FBD_D0 … FBD_D63
FBD_CMD0 … FBD_CMD35
FBD_DQM0 … FBD_DQM7
FBD_DQS_WP0 … FBD_DQS_WP7
FBD_CLK0
FBD_CLK1
FBD_WCK01
FBD_WCKB01
FBD_WCK23
FBD_WCKB23
FBD_WCK45
FBD_WCKB45
FBD_WCK67
FBD_WCKB67
FBD_PLL_AVDD
FBD_DEBUG0
Fbd_D<0> … Fbd_D<63>
Fbd_Cmd<0> … Fbd_Cmd<31>
FBD_DBI<0> … FBD_DBI<7>
FBD_EDC<0> … FBD_EDC<7>
R847
60.4ohm
R845
60.4ohm
C1073
0.1uF
R353
10k
R355
10k
R354
10k
R356
10k
R344
10k
R336
10k
R357
10k
R358
10k
5 %
0402
COMMON
VVVV36004S1
R11-0103012-W08
FBC_CMD<13>
FBC_CMD<29>
FBC_CMD<1>
FBC_CMD<17>
FBD_CMD<13>
FBD_CMD<29>
FBD_CMD<1>
FBD_CMD<17>
FB_CLK
FB_WCK
OUT
IN
BI
10
11
12
13

GDDR5X CMD Mapping

CMD	0..31	32..63
CMD0	CAS*	
CMD1	RST*	
CMD2	RAS*	
CMD3	A1_A9	
CMD4	A0_A10	
CMD5	A12_A13	
CMD6	ABI*	
CMD7	A6_A11	
CMD8	A7_A8	
CMD9	A4_BA2	
CMD10	A5_BA1	
CMD11	A3_BA3	
CMD12	A2_BA0	
CMD13	CKE*	
CMD14	A14_A15	
CMD15	WE*	
CMD16		CAS*
CMD17		RST*
CMD18		RAS*
CMD19		A1_A9
CMD20		A0_A10
CMD21		A12_A13
CMD22		ABI*
CMD23		A6_A11
CMD24		A7_A8
CMD25		A4_BA2
CMD26		A5_BA1
CMD27		A3_BA3
CMD28		A2_BA0
CMD29		CKE*
CMD30		A14_A15
CMD31		WE*
CMD32		
CMD33		
CMD34	DBG0	DBG0
CMD35	DBG1	DBG1

MICRO-STAR INT'L CO.,LTD

MS-V360

Size	Document Description	Rev
Custom	MEMORY: GPU Partition C/D	2.0

Date: Friday, March 03, 2017 | Sheet 9 of 50

Page10: MEMORY: FBC Partition 31..0

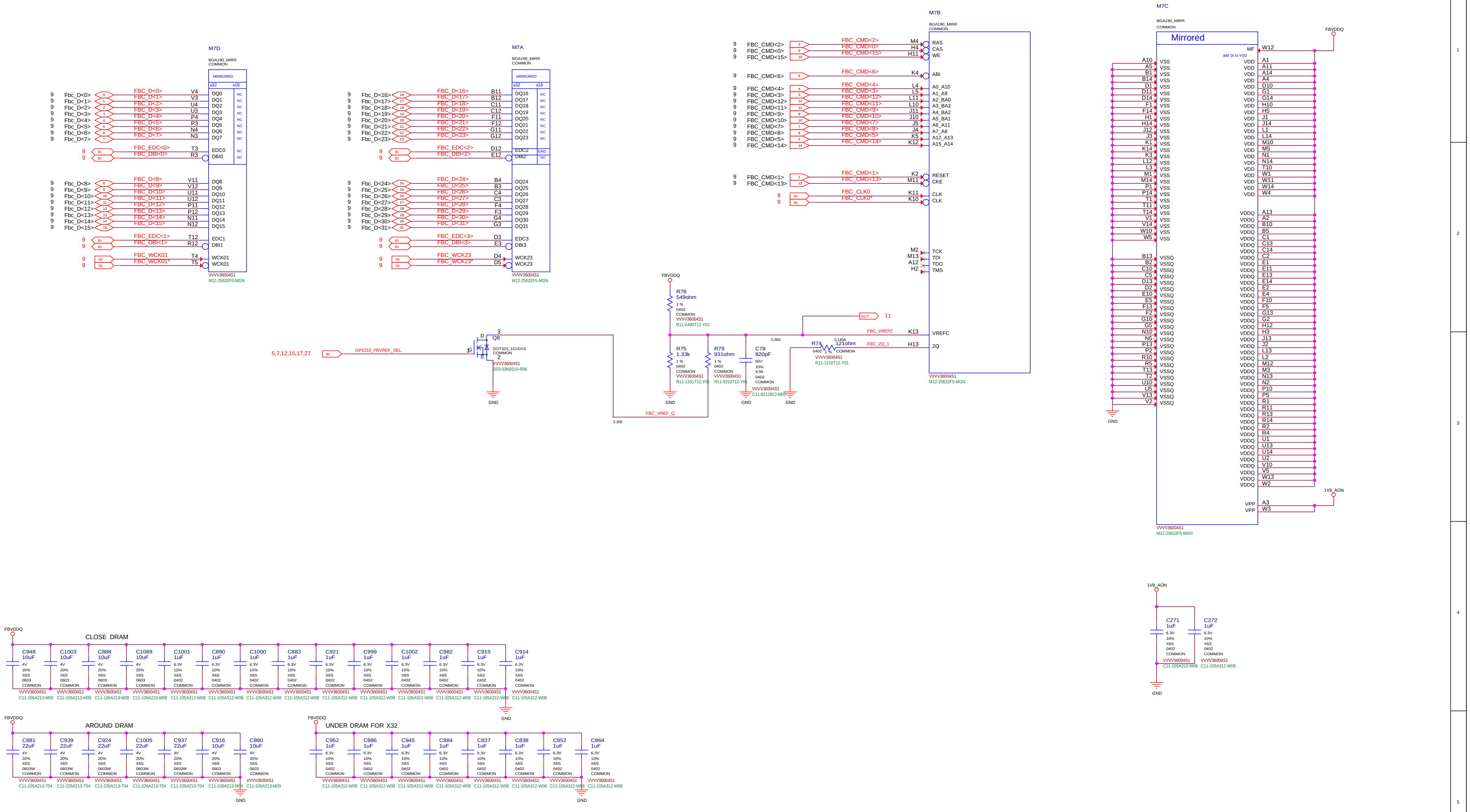
M7D
BGA190_MIRR
COMMON
MIRRORED
x32
x16
Fbc_D<0>
Fbc_D<1>
Fbc_D<2>
Fbc_D<3>
Fbc_D<4>
Fbc_D<5>
Fbc_D<6>
Fbc_D<7>
FBC_EDC<0>
FBC_DBI<0>
DQ0
DQ1
DQ2
DQ3
DQ4
DQ5
DQ6
DQ7
EDC0
DBI0
Fbc_D<8>
Fbc_D<9>
Fbc_D<10>
Fbc_D<11>
Fbc_D<12>
Fbc_D<13>
Fbc_D<14>
Fbc_D<15>
FBC_EDC<1>
FBC_DBI<1>
FBC_WCK01
FBC_WCK01*
DQ8
DQ9
DQ10
DQ11
DQ12
DQ13
DQ14
DQ15
EDC1
DBI1
WCK01
NC
VVVV36004S1
M12-25632F5-MGN
M7A
Fbc_D<16>
Fbc_D<17>
Fbc_D<18>
Fbc_D<19>
Fbc_D<20>
Fbc_D<21>
Fbc_D<22>
Fbc_D<23>
FBC_EDC<2>
FBC_DBI<2>
DQ16
DQ17
DQ18
DQ19
DQ20
DQ21
DQ22
DQ23
EDC2
DBI2
GND
Fbc_D<24>
Fbc_D<25>
Fbc_D<26>
Fbc_D<27>
Fbc_D<28>
Fbc_D<29>
Fbc_D<30>
Fbc_D<31>
FBC_EDC<3>
FBC_DBI<3>
FBC_WCK23
FBC_WCK23*
DQ24
DQ25
DQ26
DQ27
DQ28
DQ29
DQ30
DQ31
EDC3
DBI3
WCK23
BI
IN
M7B
FBC_CMD<2>
FBC_CMD<0>
FBC_CMD<15>
FBC_CMD<6>
FBC_CMD<4>
FBC_CMD<3>
FBC_CMD<12>
FBC_CMD<11>
FBC_CMD<9>
FBC_CMD<10>
FBC_CMD<7>
FBC_CMD<8>
FBC_CMD<5>
FBC_CMD<14>
FBC_CMD<1>
FBC_CMD<13>
FBC_CLK0
FBC_CLK0*
RAS
CAS
WE
ABI
A0_A10
A1_A9
A2_BA0
A3_BA3
A4_BA2
A5_BA1
A6_A11
A7_A8
A12_A13
A15_A14
RESET
CKE
CLK
TCK
TDI
TDO
TMS
VREFC
ZQ
FBC_VREFC
FBC_ZQ_1
OUT
11
FBVDDQ
R78
549ohm
1 %
0402
COMMON
R11-5490T12-Y01
R75
1.33k
R11-1331T12-Y01
R79
931ohm
R11-9310T12-Y01
C78
820pF
50V
10%
X7R
C11-8212822-M09
R74
121ohm
0.140A
R11-1210T12-Y01
0.300
FBC_VREF_Q
Q8
SOT323_1G1D1S
D03-03N0310-R06
5,7,12,15,17,27
GPIO10_FBVREF_SEL
GND
M7C
Mirrored
MF
add 1k to VDD
VSS
VDD
VSSQ
VDDQ
VPP
1V8_AON
C271
1uF
C272
1uF
C11-105A312-W08
CLOSE DRAM
C948
10uF
C1003
10uF
C888
10uF
C1089
10uF
C1001
1uF
C890
1uF
C1000
1uF
C883
1uF
C921
1uF
C999
1uF
C1002
1uF
C982
1uF
C915
1uF
C914
1uF
C11-106A213-M09
AROUND DRAM
C881
22uF
C939
22uF
C924
22uF
C1005
22uF
C937
22uF
C916
10uF
C880
10uF
C11-226A213-T04
UNDER DRAM FOR X32
C952
1uF
C886
1uF
C945
1uF
C884
1uF
C837
1uF
C838
1uF
C852
1uF
C864
1uF

MICRO-STAR INT'L CO.,LTD

MS-V360

Size Custom

Document Description MEMORY: FBC Partition 31..0

Rev 2.0

Date: Friday, March 03, 2017 Sheet 10 of 50

Page11: MEMORY: FBC Partition 63..32

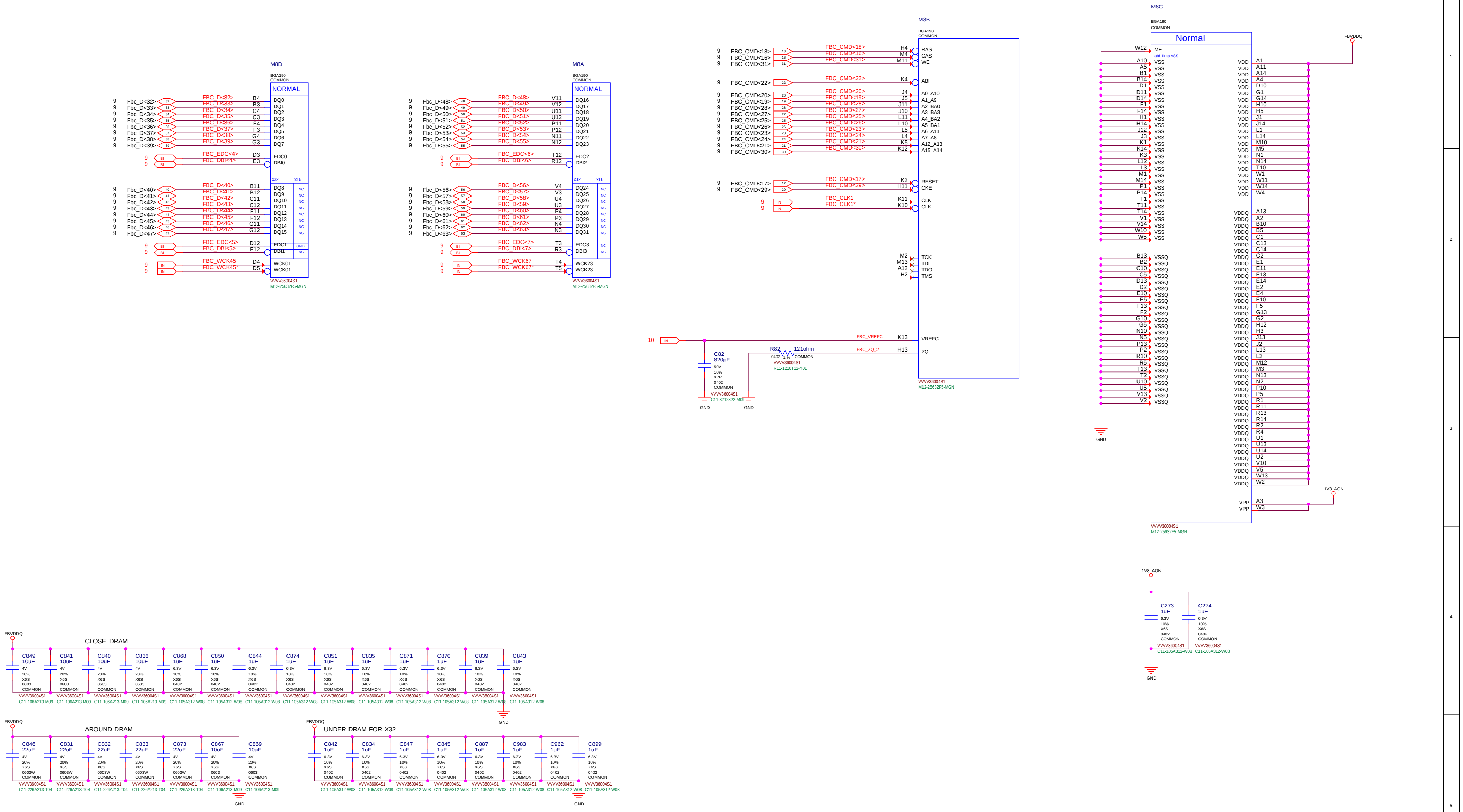
M8D
BGA190
COMMON
NORMAL
Fbc_D<32>
Fbc_D<33>
Fbc_D<34>
Fbc_D<35>
Fbc_D<36>
Fbc_D<37>
Fbc_D<38>
Fbc_D<39>
FBC_EDC<4>
FBC_DBI<4>
Fbc_D<40>
Fbc_D<41>
Fbc_D<42>
Fbc_D<43>
Fbc_D<44>
Fbc_D<45>
Fbc_D<46>
Fbc_D<47>
FBC_EDC<5>
FBC_DBI<5>
FBC_WCK45
FBC_WCK45*
DQ0
DQ1
DQ2
DQ3
DQ4
DQ5
DQ6
DQ7
EDC0
DBI0
DQ8
DQ9
DQ10
DQ11
DQ12
DQ13
DQ14
DQ15
EDC1
DBI1
WCK01
WCK01
x32
x16
NC
GND
VDDQ
VVVV36004S1
M12-25632F5-MGN
M8A
BGA190
COMMON
NORMAL
Fbc_D<48>
Fbc_D<49>
Fbc_D<50>
Fbc_D<51>
Fbc_D<52>
Fbc_D<53>
Fbc_D<54>
Fbc_D<55>
FBC_EDC<6>
FBC_DBI<6>
Fbc_D<56>
Fbc_D<57>
Fbc_D<58>
Fbc_D<59>
Fbc_D<60>
Fbc_D<61>
Fbc_D<62>
Fbc_D<63>
FBC_EDC<7>
FBC_DBI<7>
FBC_WCK67
FBC_WCK67*
DQ16
DQ17
DQ18
DQ19
DQ20
DQ21
DQ22
DQ23
EDC2
DBI2
DQ24
DQ25
DQ26
DQ27
DQ28
DQ29
DQ30
DQ31
EDC3
DBI3
WCK23
WCK23
VVVV36004S1
M12-25632F5-MGN
M8B
BGA190
COMMON
FBC_CMD<18>
FBC_CMD<16>
FBC_CMD<31>
RAS
CAS
WE
FBC_CMD<22>
ABI
FBC_CMD<20>
FBC_CMD<19>
FBC_CMD<28>
FBC_CMD<27>
FBC_CMD<25>
FBC_CMD<26>
FBC_CMD<23>
FBC_CMD<24>
FBC_CMD<21>
FBC_CMD<30>
A0_A10
A1_A9
A2_BA0
A3_BA3
A4_BA2
A5_BA1
A6_A11
A7_A8
A12_A13
A15_A14
FBC_CMD<17>
FBC_CMD<29>
RESET
CKE
FBC_CLK1
FBC_CLK1*
CLK
CLK
TCK
TDI
TDO
TMS
FBC_VREFC
VREFC
FBC_ZQ_2
ZQ
R82
121ohm
0402
1%
COMMON
VVVV36004S1
R11-1210T12-Y01
C82
820pF
50V
10%
X7R
0402
COMMON
VVVV36004S1
C11-8212822-M09
GND
GND
VVVV36004S1
M12-25632F5-MGN
M8C
BGA190
COMMON
Normal
MF
add 1k to VSS
VSS
VSSQ
VDD
VDDQ
VPP
FBVDDQ
1V8_AON
GND
VVVV36004S1
M12-25632F5-MGN
1V8_AON
C273
1uF
C274
1uF
6.3V
10%
X6S
0402
COMMON
VVVV36004S1
C11-105A312-W08
GND
FBVDDQ
CLOSE DRAM
C849
10uF
C841
10uF
C840
10uF
C836
10uF
C868
1uF
C850
1uF
C844
1uF
C874
1uF
C851
1uF
C835
1uF
C871
1uF
C870
1uF
C839
1uF
C843
1uF
C11-106A213-M09
C11-105A312-W08
GND
FBVDDQ
AROUND DRAM
C846
22uF
C831
22uF
C832
22uF
C833
22uF
C873
22uF
C867
10uF
C869
10uF
C11-226A213-T04
C11-106A213-M09
GND
FBVDDQ
UNDER DRAM FOR X32
C842
1uF
C834
1uF
C847
1uF
C845
1uF
C887
1uF
C983
1uF
C962
1uF
C899
1uF
C11-105A312-W08
GND

MICRO-STAR INT'L CO.,LTD

MS-V360

Size	Document Description	Rev
Custom	MEMORY: FBC Partition 63..32	2.0

Date: Friday, March 03, 2017 Sheet 11 of 50

Page12: MEMORY: FBD Partition 31..0

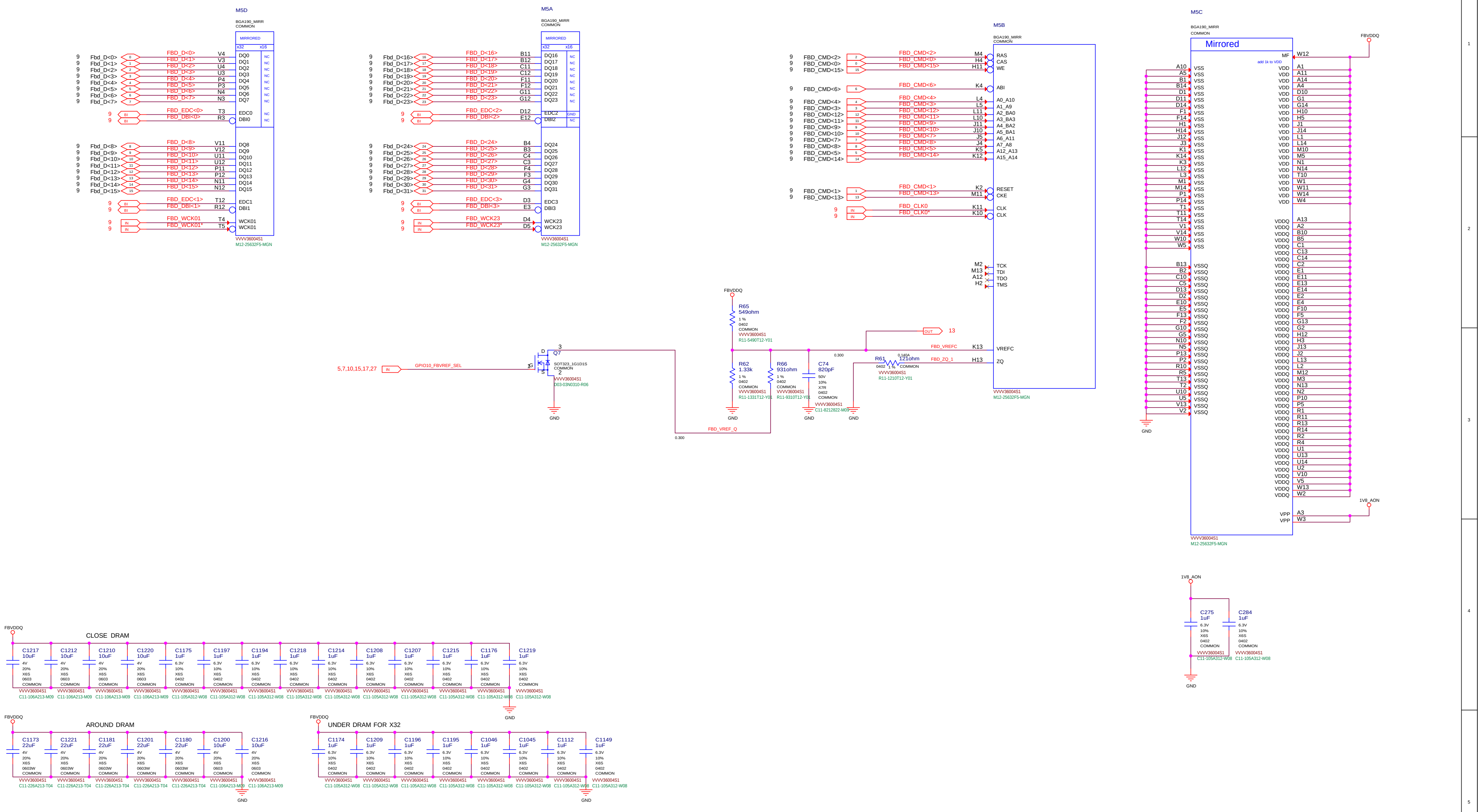
M5D
BGA190_MIRR
COMMON
MIRRORED
x32 x16
Fbd_D<0> … Fbd_D<7>
FBD_D<0> … FBD_D<7>
DQ0 … DQ7
FBD_EDC<0>
FBD_DBI<0>
EDC0
DBI0
Fbd_D<8> … Fbd_D<15>
DQ8 … DQ15
FBD_EDC<1>
FBD_DBI<1>
FBD_WCK01
FBD_WCK01*
WCK01
VVVV36004S1
M12-25632F5-MGN
M5A
Fbd_D<16> … Fbd_D<23>
DQ16 … DQ23
FBD_EDC<2>
FBD_DBI<2>
Fbd_D<24> … Fbd_D<31>
DQ24 … DQ31
FBD_EDC<3>
FBD_DBI<3>
FBD_WCK23
FBD_WCK23*
WCK23
M5B
FBD_CMD<0> … FBD_CMD<15>
RAS
CAS
WE
ABI
A0_A10
A1_A9
A2_BA0
A3_BA3
A4_BA2
A5_BA1
A6_A11
A7_A8
A12_A13
A15_A14
RESET
CKE
FBD_CLK0
FBD_CLK0*
CLK
TCK
TDI
TDO
TMS
VREFC
ZQ
FBD_VREFC
FBD_ZQ_1
FBVDDQ
R65 549ohm 1% 0402 COMMON
R62 1.33k 1% 0402 COMMON
R66 931ohm 1% 0402 COMMON
C74 820pF 50V 10% X7R 0402 COMMON
R61 121ohm 1% 0402 COMMON
Q7 SOT323_1G1D1S COMMON
5,7,10,15,17,27
GPIO10_FBVREF_SEL
FBD_VREF_Q
GND
M5C
Mirrored
MF
add 1k to VDD
VSS
VSSQ
VDD
VDDQ
VPP
1V8_AON
C275 1uF 6.3V 10% X6S 0402 COMMON
C284 1uF 6.3V 10% X6S 0402 COMMON
CLOSE DRAM
C1217 10uF, C1212 10uF, C1210 10uF, C1220 10uF, C1175 1uF, C1197 1uF, C1194 1uF, C1218 1uF, C1214 1uF, C1208 1uF, C1207 1uF, C1215 1uF, C1176 1uF, C1219 1uF
AROUND DRAM
C1173 22uF, C1221 22uF, C1181 22uF, C1201 22uF, C1180 22uF, C1200 10uF, C1216 10uF
UNDER DRAM FOR X32
C1174 1uF, C1209 1uF, C1196 1uF, C1195 1uF, C1046 1uF, C1045 1uF, C1112 1uF, C1149 1uF

MICRO-STAR INT'L CO.,LTD

MS-V360

Size: Custom
Document Description: MEMORY: FBD Partition 31..0
Rev: 2.0
Date: Friday, March 03, 2017
Sheet 12 of 50

Page13: MEMORY: FBD Partition 63..32

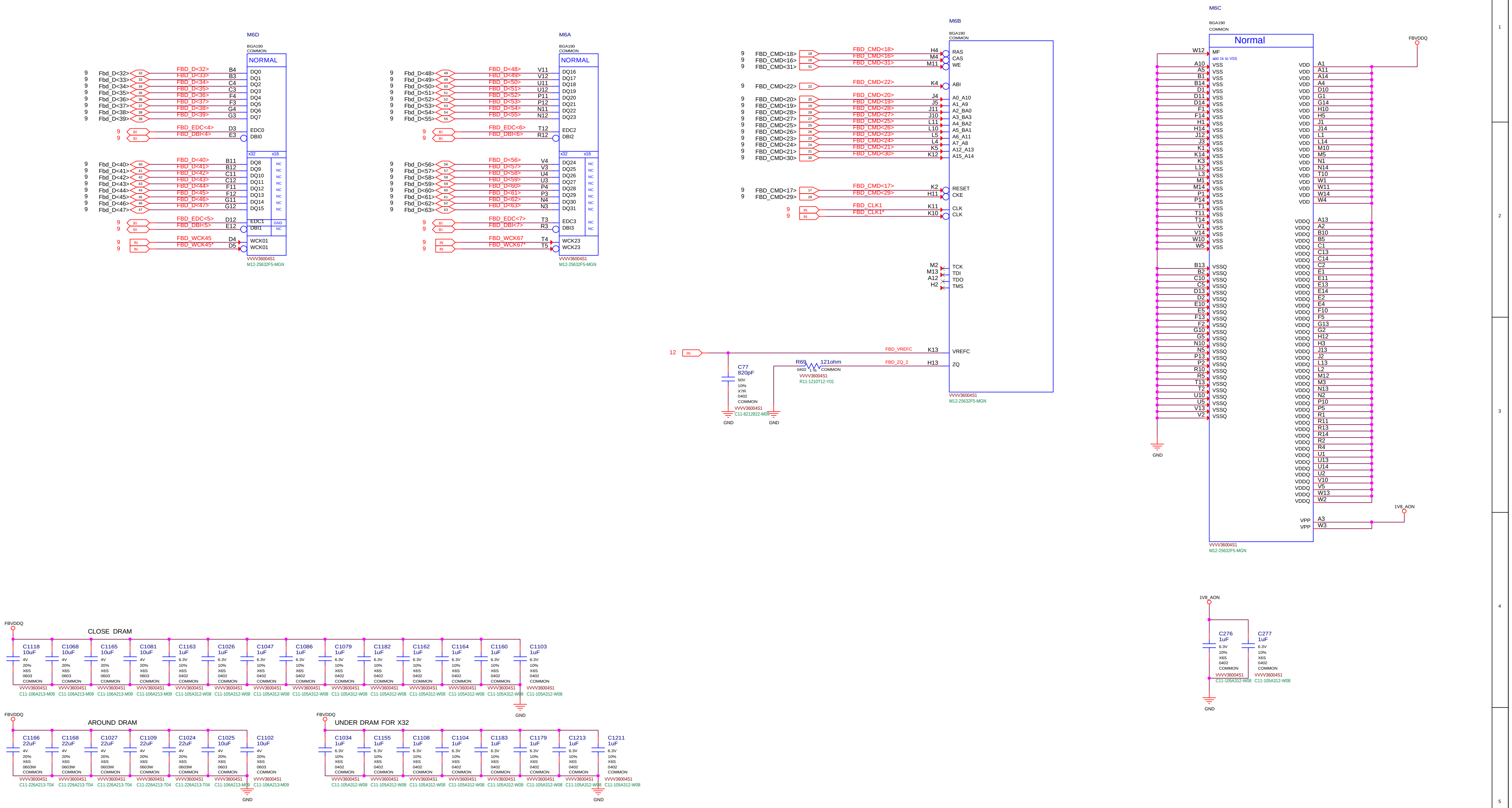
M6D
BGA190
COMMON
NORMAL
Fbd_D<32>
Fbd_D<33>
Fbd_D<34>
Fbd_D<35>
Fbd_D<36>
Fbd_D<37>
Fbd_D<38>
Fbd_D<39>
FBD_D<32>
FBD_D<33>
FBD_D<34>
FBD_D<35>
FBD_D<36>
FBD_D<37>
FBD_D<38>
FBD_D<39>
DQ0
DQ1
DQ2
DQ3
DQ4
DQ5
DQ6
DQ7
FBD_EDC<4>
FBD_DBI<4>
EDC0
DBI0
x32
x16
Fbd_D<40>
Fbd_D<41>
Fbd_D<42>
Fbd_D<43>
Fbd_D<44>
Fbd_D<45>
Fbd_D<46>
Fbd_D<47>
DQ8
DQ9
DQ10
DQ11
DQ12
DQ13
DQ14
DQ15
NC
FBD_EDC<5>
FBD_DBI<5>
EDC1
DBI1
GND
FBD_WCK45
FBD_WCK45*
WCK01
WCK01
VVVV36004S1
M12-25632F5-MGN
M6A
BGA190
COMMON
NORMAL
Fbd_D<48>
Fbd_D<49>
Fbd_D<50>
Fbd_D<51>
Fbd_D<52>
Fbd_D<53>
Fbd_D<54>
Fbd_D<55>
DQ16
DQ17
DQ18
DQ19
DQ20
DQ21
DQ22
DQ23
FBD_EDC<6>
FBD_DBI<6>
EDC2
DBI2
Fbd_D<56>
Fbd_D<57>
Fbd_D<58>
Fbd_D<59>
Fbd_D<60>
Fbd_D<61>
Fbd_D<62>
Fbd_D<63>
DQ24
DQ25
DQ26
DQ27
DQ28
DQ29
DQ30
DQ31
FBD_EDC<7>
FBD_DBI<7>
EDC3
DBI3
FBD_WCK67
FBD_WCK67*
WCK23
WCK23
VVVV36004S1
M12-25632F5-MGN
M6B
BGA190
COMMON
FBD_CMD<18>
FBD_CMD<16>
FBD_CMD<31>
RAS
CAS
WE
FBD_CMD<22>
ABI
FBD_CMD<20>
FBD_CMD<19>
FBD_CMD<28>
FBD_CMD<27>
FBD_CMD<25>
FBD_CMD<26>
FBD_CMD<23>
FBD_CMD<24>
FBD_CMD<21>
FBD_CMD<30>
A0_A10
A1_A9
A2_BA0
A3_BA3
A4_BA2
A5_BA1
A6_A11
A7_A8
A12_A13
A15_A14
FBD_CMD<17>
FBD_CMD<29>
RESET
CKE
FBD_CLK1
FBD_CLK1*
CLK
CLK
TCK
TDI
TDO
TMS
FBD_VREFC
VREFC
FBD_ZQ_2
ZQ
R69
121ohm
0402 1%
COMMON
VVVV36004S1
R11-1210T12-Y01
C77
820pF
50V
10%
X7R
0402
COMMON
VVVV36004S1
C11-8212822-M09
GND
VVVV36004S1
M12-25632F5-MGN
M6C
BGA190
COMMON
Normal
MF
add 1k to VSS
VSS
VSSQ
VDD
VDDQ
VPP
FBVDDQ
1V8_AON
GND
VVVV36004S1
M12-25632F5-MGN
CLOSE DRAM
FBVDDQ
C1118 10uF
C1068 10uF
C1165 10uF
C1081 10uF
C1163 1uF
C1026 1uF
C1047 1uF
C1086 1uF
C1079 1uF
C1182 1uF
C1162 1uF
C1164 1uF
C1160 1uF
C1103 1uF
C11-106A213-M09
C11-105A312-W08
GND
AROUND DRAM
FBVDDQ
C1166 22uF
C1168 22uF
C1027 22uF
C1109 22uF
C1024 22uF
C1025 10uF
C1102 10uF
C11-226A213-T04
C11-106A213-M09
GND
UNDER DRAM FOR X32
FBVDDQ
C1034 1uF
C1155 1uF
C1108 1uF
C1104 1uF
C1183 1uF
C1179 1uF
C1213 1uF
C1211 1uF
C11-105A312-W08
GND
1V8_AON
C276 1uF
C277 1uF
6.3V
10%
X6S
0402
COMMON
VVVV36004S1
C11-105A312-W08
GND

MSI

MICRO-STAR INT'L CO.,LTD

MS-V360

Size	Document Description	Rev
Custom	MEMORY: FBD Partition 63..32	2.0
Date: Friday, March 03, 2017	Sheet 13 of 50	

Page14: MEMORY: GPU Partition E/F

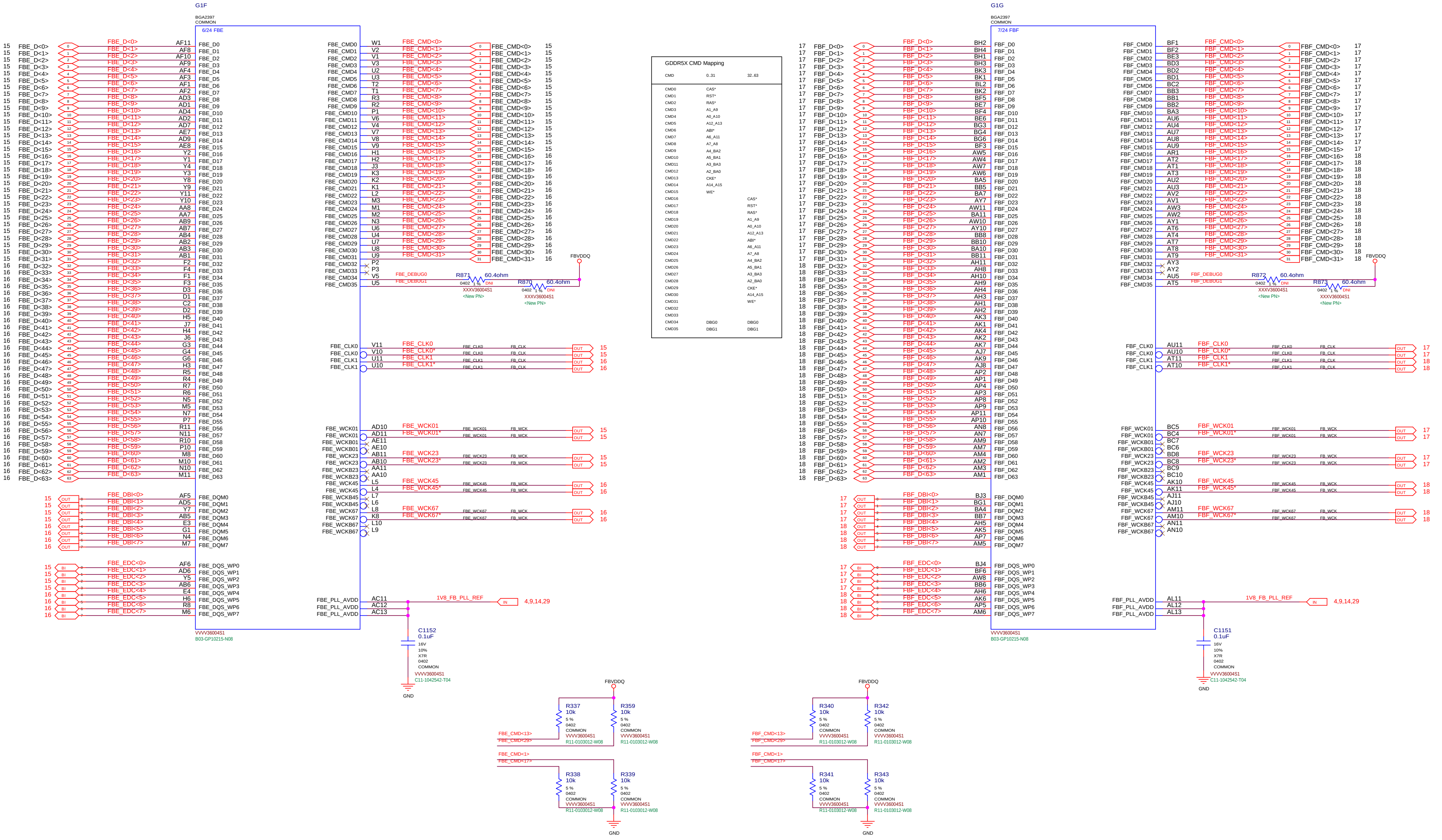
G1F
BGA2397
COMMON
6/24 FBE
VVVV36004S1
B03-GP10215-N08
G1G
BGA2397
COMMON
7/24 FBF
VVVV36004S1
B03-GP10215-N08
FBE_D<0>
FBE_D<63>
FBE_CMD<0>
FBE_CMD<31>
FBE_DBI<0>
FBE_DBI<7>
FBE_EDC<0>
FBE_EDC<7>
FBE_CLK0
FBE_CLK0*
FBE_CLK1
FBE_CLK1*
FBE_WCK01
FBE_WCK01*
FBE_WCK23
FBE_WCK23*
FBE_WCK45
FBE_WCK45*
FBE_WCK67
FBE_WCK67*
FBE_DEBUG0
FBE_DEBUG1
FBF_D<0>
FBF_D<63>
FBF_CMD<0>
FBF_CMD<31>
FBF_DBI<0>
FBF_DBI<7>
FBF_EDC<0>
FBF_EDC<7>
FBF_CLK0
FBF_CLK0*
FBF_CLK1
FBF_CLK1*
FBF_WCK01
FBF_WCK01*
FBF_WCK23
FBF_WCK23*
FBF_WCK45
FBF_WCK45*
FBF_WCK67
FBF_WCK67*
FBF_DEBUG0
FBF_DEBUG1
FBVDDQ
R871 60.4ohm
R870 60.4ohm
R872 60.4ohm
R873 60.4ohm
0402 1% DNI
XXXV36004S1
<New PN>
1V8_FB_PLL_REF
4,9,14,29
C1152
0.1uF
C1151
0.1uF
16V
10%
X7R
0402
COMMON
VVVV36004S1
C11-1042542-T04
GND
R337 10k
R359 10k
R339 10k
R338 10k
R340 10k
R342 10k
R341 10k
R343 10k
5 %
0402
COMMON
VVVV36004S1
R11-0103012-W08
FBE_CMD<13>
FBE_CMD<29>
FBE_CMD<1>
FBE_CMD<17>
FBF_CMD<13>
FBF_CMD<29>
FBF_CMD<1>
FBF_CMD<17>

GDDR5X CMD Mapping

CMD	0..31	32..63
CMD0	CAS*	
CMD1	RST*	
CMD2	RAS*	
CMD3	A1_A9	
CMD4	A0_A10	
CMD5	A12_A13	
CMD6	ABI*	
CMD7	A6_A11	
CMD8	A7_A8	
CMD9	A4_BA2	
CMD10	A5_BA1	
CMD11	A3_BA3	
CMD12	A2_BA0	
CMD13	CKE*	
CMD14	A14_A15	
CMD15	WE*	
CMD16		CAS*
CMD17		RST*
CMD18		RAS*
CMD19		A1_A9
CMD20		A0_A10
CMD21		A12_A13
CMD22		ABI*
CMD23		A6_A11
CMD24		A7_A8
CMD25		A4_BA2
CMD26		A5_BA1
CMD27		A3_BA3
CMD28		A2_BA0
CMD29		CKE*
CMD30		A14_A15
CMD31		WE*
CMD32		
CMD33		
CMD34	DBG0	DBG0
CMD35	DBG1	DBG1

MICRO-STAR INT'L CO.,LTD

MS-V360

Size	Document Description	Rev
Custom	MEMORY: GPU Partition E/F	2.0

Date: Friday, March 03, 2017 Sheet 14 of 50

Page15: MEMORY: FBE Partition 31..0

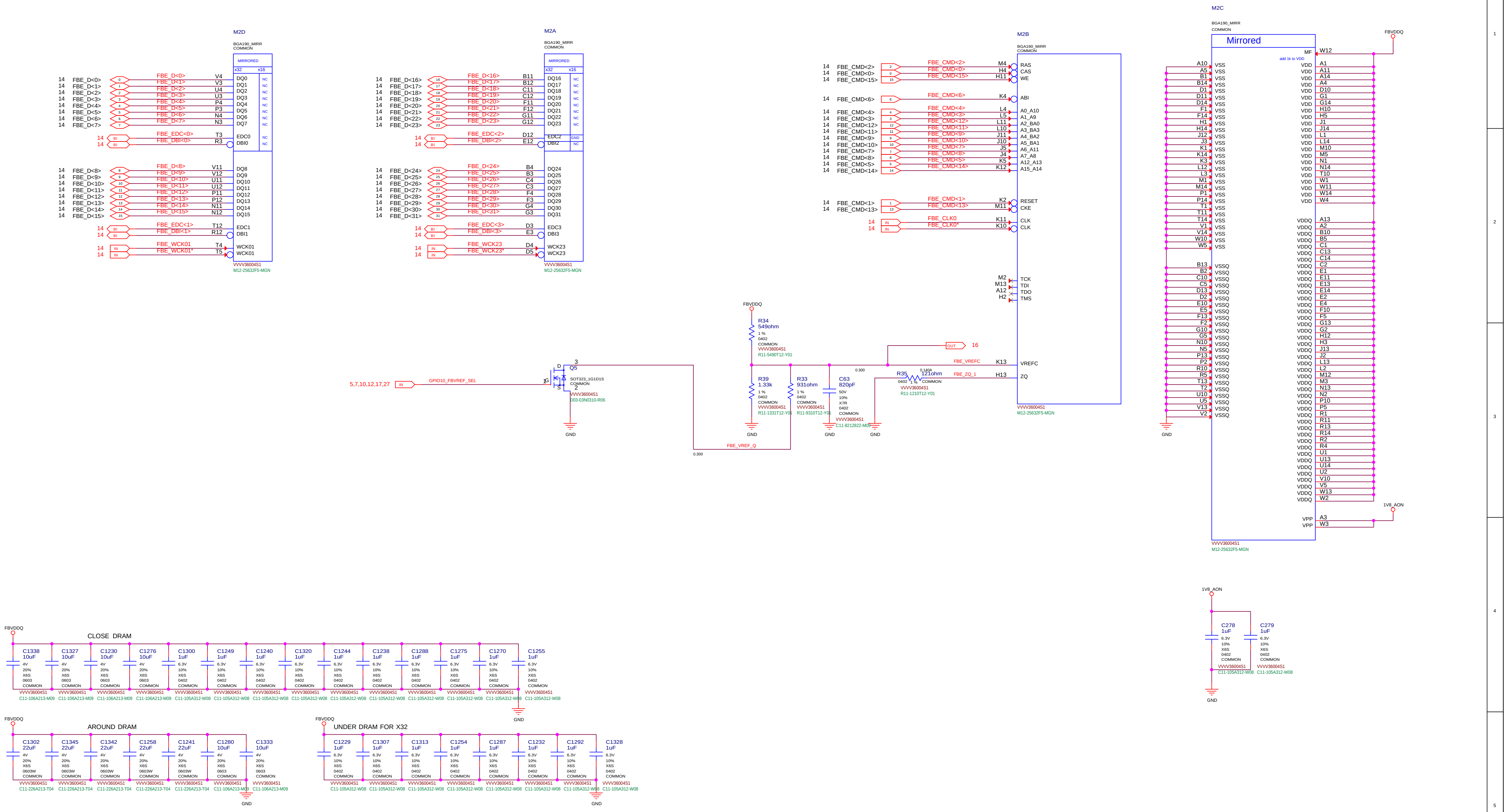

M2D
BGA190_MIRR
COMMON
MIRRORED
x32
x16
FBE_D<0>
FBE_D<1>
FBE_D<2>
FBE_D<3>
FBE_D<4>
FBE_D<5>
FBE_D<6>
FBE_D<7>
FBE_EDC<0>
FBE_DBI<0>
FBE_D<8>
FBE_D<9>
FBE_D<10>
FBE_D<11>
FBE_D<12>
FBE_D<13>
FBE_D<14>
FBE_D<15>
FBE_EDC<1>
FBE_DBI<1>
FBE_WCK01
FBE_WCK01*
DQ0
DQ1
DQ2
DQ3
DQ4
DQ5
DQ6
DQ7
EDC0
DBI0
DQ8
DQ9
DQ10
DQ11
DQ12
DQ13
DQ14
DQ15
EDC1
DBI1
WCK01
WCK01
VVVV36004S1
M12-25632F5-MGN
M2A
BGA190_MIRR
COMMON
MIRRORED
FBE_D<16>
FBE_D<17>
FBE_D<18>
FBE_D<19>
FBE_D<20>
FBE_D<21>
FBE_D<22>
FBE_D<23>
FBE_EDC<2>
FBE_DBI<2>
FBE_D<24>
FBE_D<25>
FBE_D<26>
FBE_D<27>
FBE_D<28>
FBE_D<29>
FBE_D<30>
FBE_D<31>
FBE_EDC<3>
FBE_DBI<3>
FBE_WCK23
FBE_WCK23*
DQ16
DQ17
DQ18
DQ19
DQ20
DQ21
DQ22
DQ23
EDC2
DBI2
DQ24
DQ25
DQ26
DQ27
DQ28
DQ29
DQ30
DQ31
EDC3
DBI3
WCK23
WCK23
VVVV36004S1
M12-25632F5-MGN
M2B
BGA190_MIRR
COMMON
FBE_CMD<2>
FBE_CMD<0>
FBE_CMD<15>
FBE_CMD<6>
FBE_CMD<4>
FBE_CMD<3>
FBE_CMD<12>
FBE_CMD<11>
FBE_CMD<9>
FBE_CMD<10>
FBE_CMD<7>
FBE_CMD<8>
FBE_CMD<5>
FBE_CMD<14>
FBE_CMD<1>
FBE_CMD<13>
FBE_CLK0
FBE_CLK0*
RAS
CAS
WE
ABI
A0_A10
A1_A9
A2_BA0
A3_BA3
A4_BA2
A5_BA1
A6_A11
A7_A8
A12_A13
A15_A14
RESET
CKE
CLK
CLK
TCK
TDI
TDO
TMS
VREFC
ZQ
FBE_VREFC
FBE_ZQ_1
OUT
16
VVVV36004S1
M12-25632F5-MGN
M2C
BGA190_MIRR
COMMON
Mirrored
FBVDDQ
MF
W12
add 1k to VDD
VSS
VDD
VSSQ
VDDQ
VPP
A3
W3
1V8_AON
VVVV36004S1
M12-25632F5-MGN
FBVDDQ
R34
549ohm
1 %
0402
COMMON
VVVV36004S1
R11-5490T12-Y01
R39
1.33k
R11-1331T12-Y01
R33
931ohm
R11-9310T12-Y01
C63
820pF
50V
10%
X7R
0402
C11-8212822-M09
R35
121ohm
R11-1210T12-Y01
0.300
0.140A
Q5
SOT323_1G1D1S
COMMON
D03-03N0310-R06
5,7,10,12,17,27
IN
GPIO10_FBVREF_SEL
FBE_VREF_Q
GND
CLOSE DRAM
C1338 10uF
C1327 10uF
C1230 10uF
C1276 10uF
C1300 1uF
C1249 1uF
C1240 1uF
C1320 1uF
C1244 1uF
C1238 1uF
C1288 1uF
C1275 1uF
C1270 1uF
C1255 1uF
C11-106A213-M09
C11-105A312-W08
AROUND DRAM
C1302 22uF
C1345 22uF
C1342 22uF
C1258 22uF
C1241 22uF
C1280 10uF
C1333 10uF
C11-226A213-T04
UNDER DRAM FOR X32
C1229 1uF
C1307 1uF
C1313 1uF
C1254 1uF
C1287 1uF
C1232 1uF
C1292 1uF
C1328 1uF
C278 1uF
C279 1uF
6.3V
10%
X6S
0402
COMMON
A
B
C
D
E
F
G
H
1
2
3
4
5

MICRO-STAR INT'L CO.,LTD

MS-V360

Size	Document Description	Rev
Custom	MEMORY: FBE Partition 31..0	2.0

Date: Friday, March 03, 2017 Sheet 15 of 50

Page16: MEMORY: FBE Partition 63..32

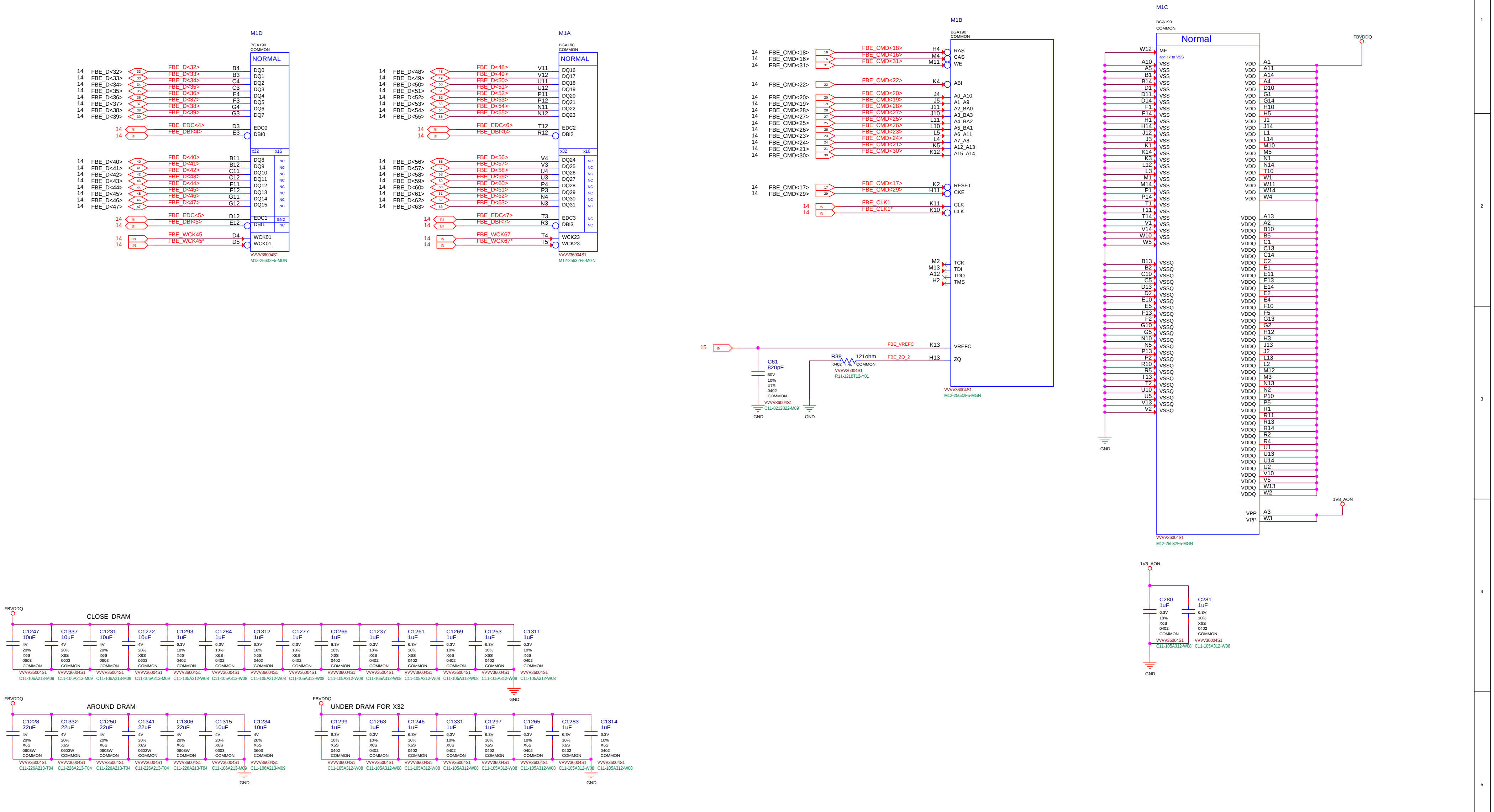
M1D
BGA190 COMMON
NORMAL
FBE_D<32> … FBE_D<47>
FBE_EDC<4>
FBE_DBI<4>
FBE_EDC<5>
FBE_DBI<5>
FBE_WCK45
FBE_WCK45*
VVVV36004S1
M12-25632F5-MGN
M1A
BGA190 COMMON
NORMAL
FBE_D<48> … FBE_D<63>
FBE_EDC<6>
FBE_DBI<6>
FBE_EDC<7>
FBE_DBI<7>
FBE_WCK67
FBE_WCK67*
M1B
BGA190 COMMON
FBE_CMD<16> … FBE_CMD<31>
FBE_CLK1
FBE_CLK1*
FBE_VREFC
FBE_ZQ_2
RAS
CAS
WE
ABI
RESET
CKE
CLK
TCK
TDI
TDO
TMS
VREFC
ZQ
C61 820pF 50V 10% X7R 0402 COMMON
R38 121ohm 0402 1% COMMON
GND
M1C
BGA190 COMMON
Normal
MF
add 1k to VSS
VSS
VSSQ
VDD
VDDQ
VPP
FBVDDQ
1V8_AON
C280 1uF
C281 1uF
FBVDDQ
CLOSE DRAM
C1247 10uF
C1337 10uF
C1231 10uF
C1272 10uF
C1293 1uF
C1284 1uF
C1312 1uF
C1277 1uF
C1266 1uF
C1237 1uF
C1261 1uF
C1269 1uF
C1253 1uF
C1311 1uF
AROUND DRAM
C1228 22uF
C1332 22uF
C1250 22uF
C1341 22uF
C1306 22uF
C1315 10uF
C1234 10uF
UNDER DRAM FOR X32
C1299 1uF
C1263 1uF
C1246 1uF
C1331 1uF
C1297 1uF
C1265 1uF
C1283 1uF
C1314 1uF

MICRO-STAR INT'L CO.,LTD

MS-V360

Size	Document Description	Rev
Custom	MEMORY: FBE Partition 63..32	2.0

Date: Friday, March 03, 2017 Sheet 16 of 50

Page17: MEMORY: FBF Partition 31..0

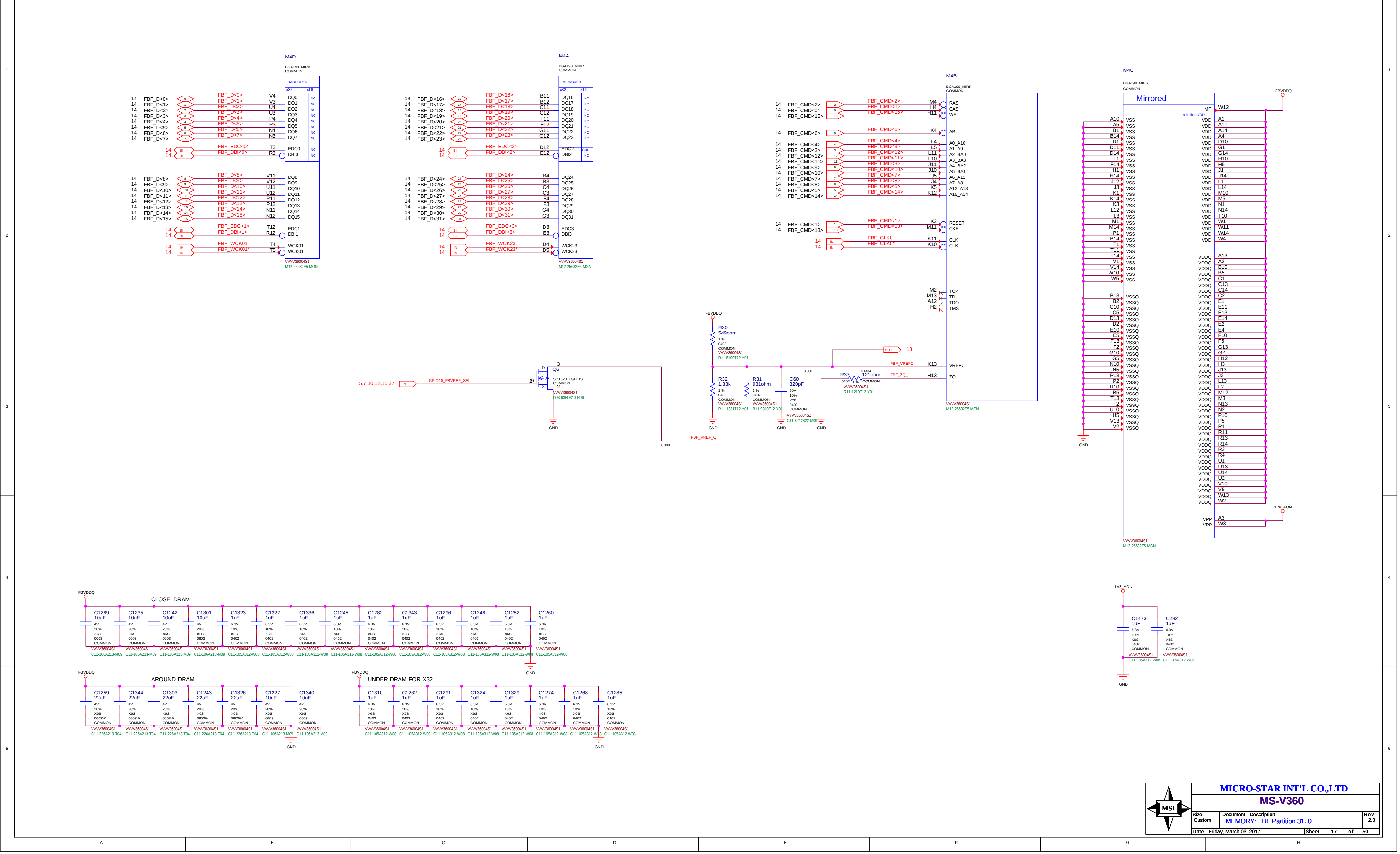

M4D
BGA190_MIRR
COMMON
MIRRORED
x32
x16
FBF_D<0>
FBF_D<1>
FBF_D<2>
FBF_D<3>
FBF_D<4>
FBF_D<5>
FBF_D<6>
FBF_D<7>
FBF_EDC<0>
FBF_DBI<0>
FBF_D<8>
FBF_D<9>
FBF_D<10>
FBF_D<11>
FBF_D<12>
FBF_D<13>
FBF_D<14>
FBF_D<15>
FBF_EDC<1>
FBF_DBI<1>
FBF_WCK01
FBF_WCK01*
DQ0
DQ1
DQ2
DQ3
DQ4
DQ5
DQ6
DQ7
EDC0
DBI0
DQ8
DQ9
DQ10
DQ11
DQ12
DQ13
DQ14
DQ15
EDC1
DBI1
WCK01
WCK01
NC
VVV36004S1
M12-25632F5-MGN
M4A
FBF_D<16>
FBF_D<17>
FBF_D<18>
FBF_D<19>
FBF_D<20>
FBF_D<21>
FBF_D<22>
FBF_D<23>
FBF_EDC<2>
FBF_DBI<2>
FBF_D<24>
FBF_D<25>
FBF_D<26>
FBF_D<27>
FBF_D<28>
FBF_D<29>
FBF_D<30>
FBF_D<31>
FBF_EDC<3>
FBF_DBI<3>
FBF_WCK23
FBF_WCK23*
DQ16
DQ17
DQ18
DQ19
DQ20
DQ21
DQ22
DQ23
EDC2
DBI2
DQ24
DQ25
DQ26
DQ27
DQ28
DQ29
DQ30
DQ31
EDC3
DBI3
WCK23
WCK23
GND
M4B
FBF_CMD<2>
FBF_CMD<0>
FBF_CMD<15>
FBF_CMD<6>
FBF_CMD<4>
FBF_CMD<3>
FBF_CMD<12>
FBF_CMD<11>
FBF_CMD<9>
FBF_CMD<10>
FBF_CMD<7>
FBF_CMD<8>
FBF_CMD<5>
FBF_CMD<14>
FBF_CMD<1>
FBF_CMD<13>
FBF_CLK0
FBF_CLK0*
RAS
CAS
WE
ABI
A0_A10
A1_A9
A2_BA0
A3_BA3
A4_BA2
A5_BA1
A6_A11
A7_A8
A12_A13
A15_A14
RESET
CKE
CLK
CLK
TCK
TDI
TDO
TMS
VREFC
ZQ
FBF_VREFC
FBF_ZQ_1
OUT
18
FBVDDQ
R30
549ohm
1 %
0402
R11-5490T12-Y01
R32
1.33k
R11-1331T12-Y01
R31
931ohm
R11-9310T12-Y01
C60
820pF
50V
10%
X7R
C11-8212822-M09
R37
121ohm
0.140A
R11-1210T12-Y01
0.300
FBF_VREF_Q
5,7,10,12,15,27
IN
GPIO10_FBVREF_SEL
Q6
SOT323_1G1D1S
D03-03N0310-R06
GND
M4C
Mirrored
MF
add 1k to VDD
W12
VSS
VSSQ
VDD
VDDQ
VPP
1V8_AON
CLOSE DRAM
C1289 10uF
C1235 10uF
C1242 10uF
C1301 10uF
C1323 1uF
C1322 1uF
C1336 1uF
C1245 1uF
C1282 1uF
C1343 1uF
C1296 1uF
C1248 1uF
C1252 1uF
C1260 1uF
C11-106A213-M09
C11-105A312-W08
AROUND DRAM
C1259 22uF
C1344 22uF
C1303 22uF
C1243 22uF
C1326 22uF
C1227 10uF
C1340 10uF
C11-226A213-T04
UNDER DRAM FOR X32
C1310 1uF
C1262 1uF
C1291 1uF
C1324 1uF
C1329 1uF
C1274 1uF
C1268 1uF
C1285 1uF
C1473 1uF
C282 1uF

MICRO-STAR INT'L CO.,LTD

MS-V360

Size	Document Description	Rev
Custom	MEMORY: FBF Partition 31..0	2.0

Date: Friday, March 03, 2017 Sheet 17 of 50

Page18: MEMORY: FBF Partition 63..32

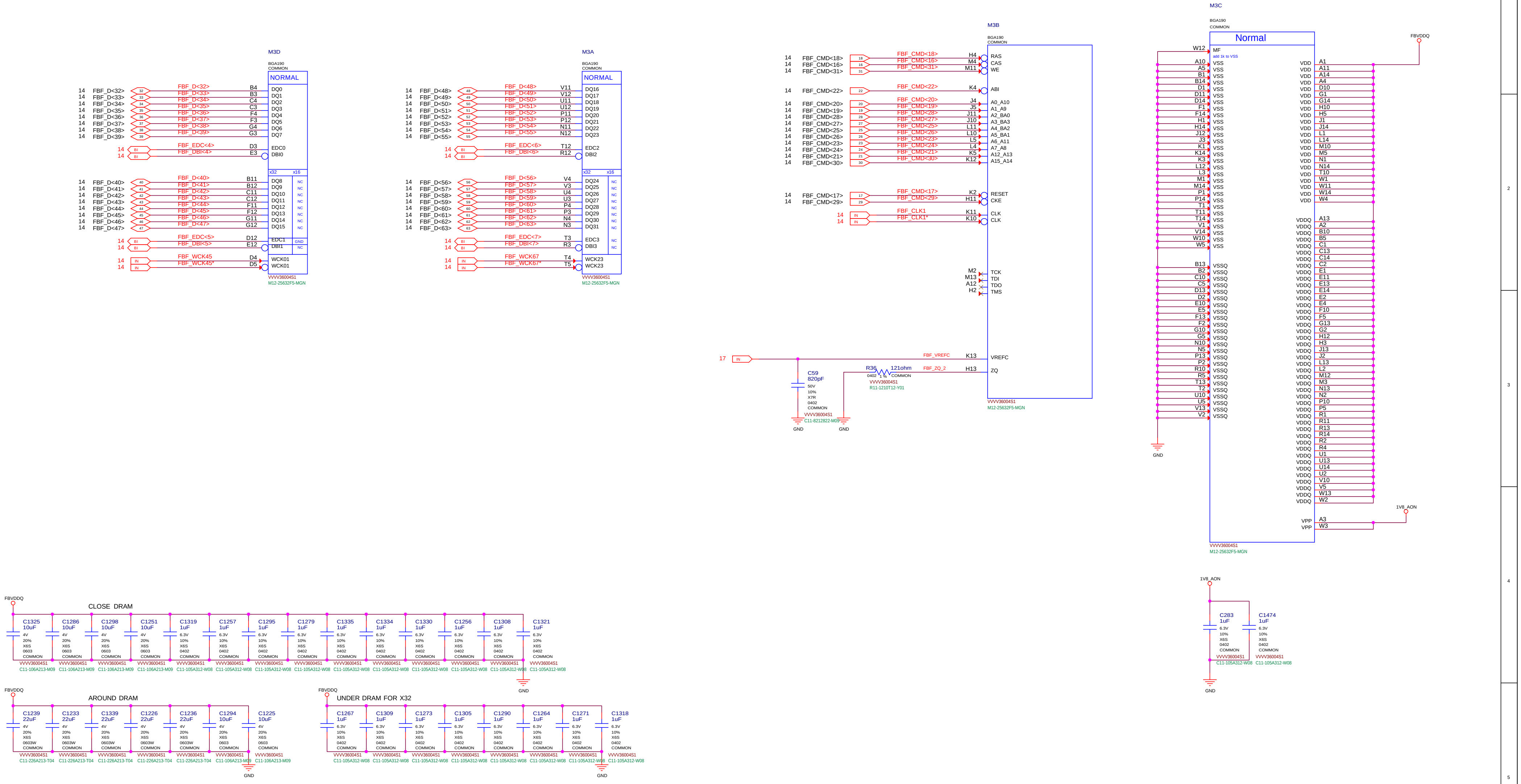
M3D
BGA190
COMMON
NORMAL
FBF_D<32> … FBF_D<39>
DQ0 DQ1 DQ2 DQ3 DQ4 DQ5 DQ6 DQ7
FBF_EDC<4>
FBF_DBI<4>
EDC0
DBI0
FBF_D<40> … FBF_D<47>
DQ8 DQ9 DQ10 DQ11 DQ12 DQ13 DQ14 DQ15
FBF_EDC<5>
FBF_DBI<5>
EDC1
DBI1
FBF_WCK45
FBF_WCK45*
WCK01
WCK01
x32
x16
NC
GND
VVVV36004S1
M12-25632F5-MGN
M3A
BGA190
COMMON
NORMAL
FBF_D<48> … FBF_D<55>
DQ16 DQ17 DQ18 DQ19 DQ20 DQ21 DQ22 DQ23
FBF_EDC<6>
FBF_DBI<6>
EDC2
DBI2
FBF_D<56> … FBF_D<63>
DQ24 DQ25 DQ26 DQ27 DQ28 DQ29 DQ30 DQ31
FBF_EDC<7>
FBF_DBI<7>
EDC3
DBI3
FBF_WCK67
FBF_WCK67*
WCK23
WCK23
VVVV36004S1
M12-25632F5-MGN
M3B
BGA190
COMMON
FBF_CMD<18>
FBF_CMD<16>
FBF_CMD<31>
RAS
CAS
WE
FBF_CMD<22>
ABI
FBF_CMD<20>
FBF_CMD<19>
FBF_CMD<28>
FBF_CMD<27>
FBF_CMD<25>
FBF_CMD<26>
FBF_CMD<23>
FBF_CMD<24>
FBF_CMD<21>
FBF_CMD<30>
A0_A10
A1_A9
A2_BA0
A3_BA3
A4_BA2
A5_BA1
A6_A11
A7_A8
A12_A13
A15_A14
FBF_CMD<17>
FBF_CMD<29>
RESET
CKE
FBF_CLK1
FBF_CLK1*
CLK
CLK
TCK
TDI
TDO
TMS
FBF_VREFC
VREFC
FBF_ZQ_2
ZQ
R36
121ohm
0402
1%
COMMON
VVVV36004S1
R11-1210T12-Y01
C59
820pF
50V
10%
X7R
0402
COMMON
VVVV36004S1
C11-8212822-M09
GND
VVVV36004S1
M12-25632F5-MGN
M3C
BGA190
COMMON
Normal
MF
add 1k to VSS
VSS
VSSQ
VDD
VDDQ
VPP
FBVDDQ
1V8_AON
VVVV36004S1
M12-25632F5-MGN
CLOSE DRAM
C1325 10uF
C1286 10uF
C1298 10uF
C1251 10uF
C1319 1uF
C1257 1uF
C1295 1uF
C1279 1uF
C1335 1uF
C1334 1uF
C1330 1uF
C1256 1uF
C1308 1uF
C1321 1uF
C11-106A213-M09
C11-105A312-W08
AROUND DRAM
C1239 22uF
C1233 22uF
C1339 22uF
C1226 22uF
C1236 22uF
C1294 10uF
C1225 10uF
C11-226A213-T04
C11-106A213-M09
UNDER DRAM FOR X32
C1267 1uF
C1309 1uF
C1273 1uF
C1305 1uF
C1290 1uF
C1264 1uF
C1271 1uF
C1318 1uF
C11-105A312-W08
C283 1uF
C1474 1uF
GND

MICRO-STAR INT'L CO.,LTD		
MS-V360		
Size Custom	Document Description MEMORY: FBF Partition 63..32	Rev 2.0
Date: Friday, March 03, 2017	Sheet 18 of 50	

Page19: GPU PWR and GND

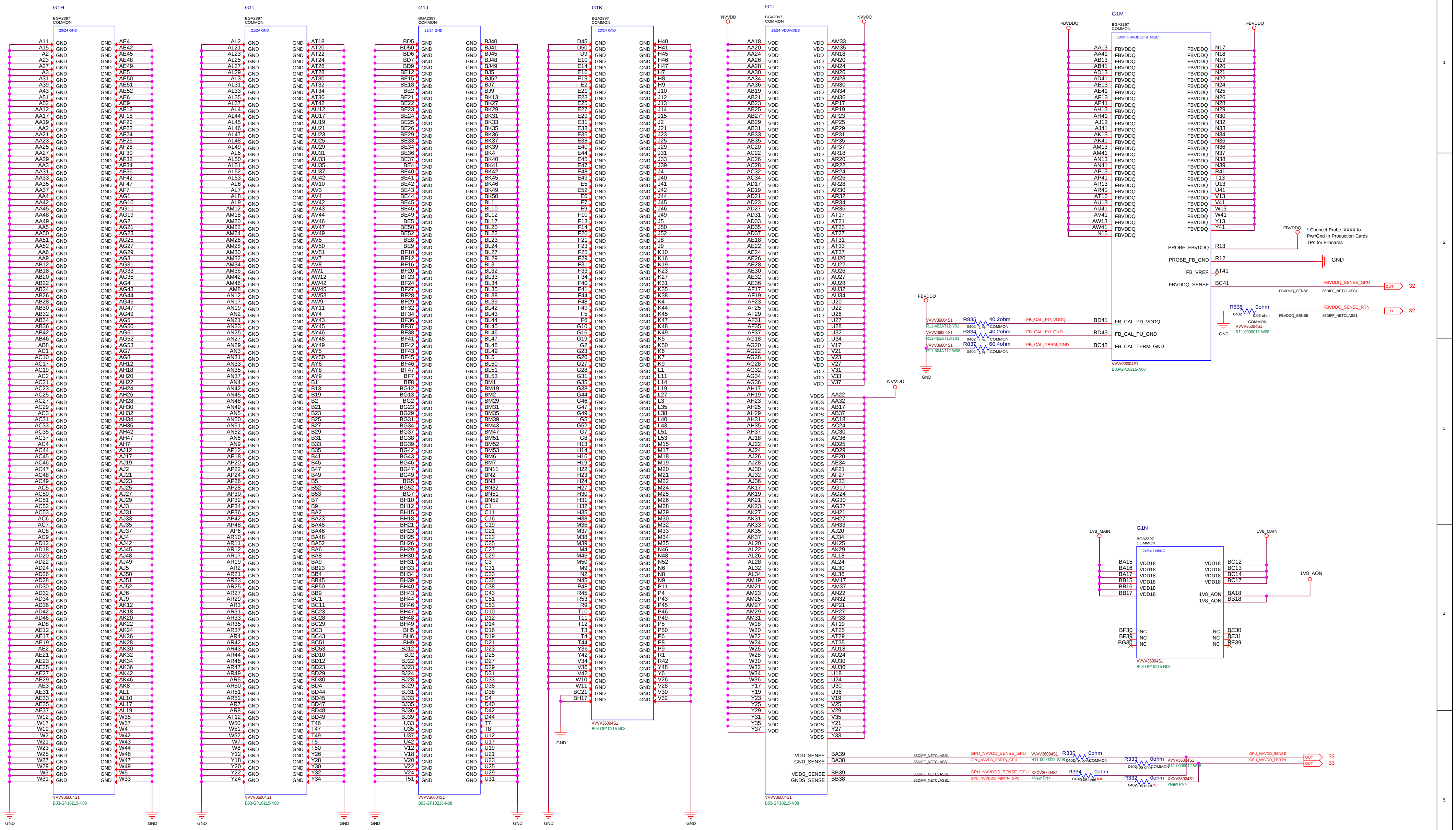
G1H
BGA2397 COMMON
20/24 GND
G1I
21/24 GND
G1J
22/24 GND
G1K
23/24 GND
G1L
19/24 VDD/VDDS
G1M
18/24 FBVDDQ/FB_MISC
G1N
24/24 1V8/NC
NVVDD
FBVDDQ
1V8_MAIN
1V8_AON
GND
VDD
VDDS
FBVDDQ
VDD18
NC
PROBE_FBVDDQ
PROBE_FB_GND
FB_VREF
FBVDDQ_SENSE
FB_CAL_PD_VDDQ
FB_CAL_PU_GND
FB_CAL_TERM_GND
FBVDDQ_SENSE_GPU
FBVDDQ_SENSE_RTN
* Connect Probe_XXXX to Pwr/Gnd in Production Cards TPs for E-boards
R835 40.2ohm
R834 40.2ohm
R837 60.4ohm
R836 0ohm
VDD_SENSE
GND_SENSE
VDDS_SENSE
GNDS_SENSE
GPU_NVVDD_SENSE_GPU
GPU_NVVDD_FBRTN_GPU
GPU_NVVDDS_SENSE_GPU
GPU_NVVDDS_FBRTN_GPU
R335 0ohm
R333 0ohm
R334 0ohm
R332 0ohm
GPU_NVVDD_SENSE
GPU_NVVDD_FBRTN
85DIFF_NETCLASS1
VVVV36004S1
B03-GP10215-N08
33
32

MICRO-STAR INT'L CO.,LTD

MS-V360

Size	Document Description	Rev
Custom	GPU PWR and GND	2.0

Date: Friday, March 03, 2017 Sheet 19 of 50

Page20: GPU Decoupling

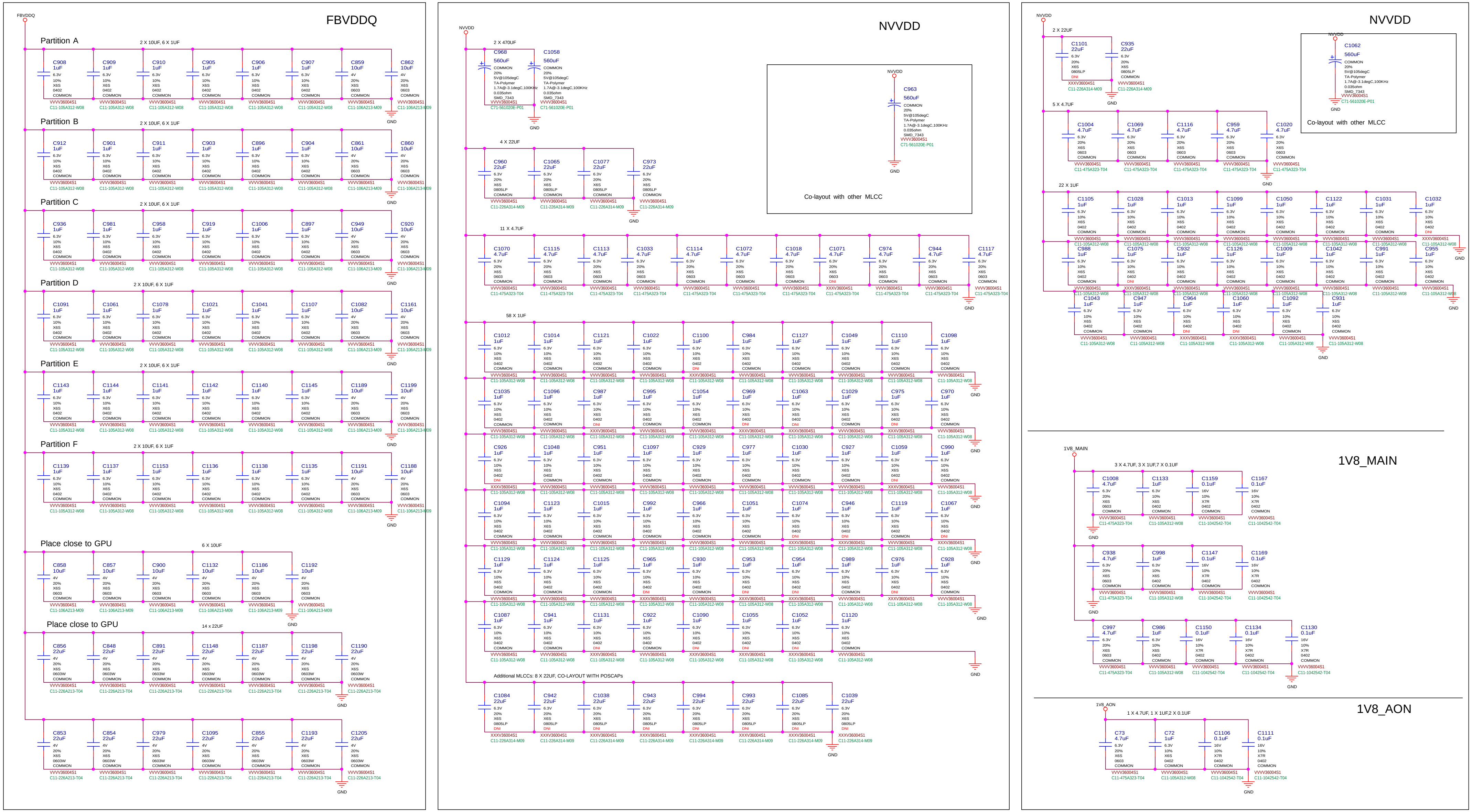
FBVDDQ
Partition A
2 X 10UF, 6 X 1UF
C908 1uF
C909 1uF
C910 1uF
C905 1uF
C906 1uF
C907 1uF
C859 10uF
C862 10uF
Partition B
2 X 10UF, 6 X 1UF
C912 1uF
C901 1uF
C911 1uF
C903 1uF
C896 1uF
C904 1uF
C861 10uF
C860 10uF
Partition C
2 X 10UF, 6 X 1UF
C936 1uF
C981 1uF
C958 1uF
C919 1uF
C1006 1uF
C897 1uF
C949 10uF
C920 10uF
Partition D
2 X 10UF, 6 X 1UF
C1091 1uF
C1061 1uF
C1078 1uF
C1021 1uF
C1041 1uF
C1107 1uF
C1082 10uF
C1161 10uF
Partition E
2 X 10UF, 6 X 1UF
C1143 1uF
C1144 1uF
C1141 1uF
C1142 1uF
C1140 1uF
C1145 1uF
C1189 10uF
C1199 10uF
Partition F
2 X 10UF, 6 X 1UF
C1139 1uF
C1137 1uF
C1153 1uF
C1136 1uF
C1138 1uF
C1135 1uF
C1191 10uF
C1188 10uF
Place close to GPU
6 X 10UF
C858 10uF
C857 10uF
C900 10uF
C1132 10uF
C1186 10uF
C1192 10uF
Place close to GPU
14 x 22UF
C856 22uF
C848 22uF
C891 22uF
C1148 22uF
C1187 22uF
C1198 22uF
C1190 22uF
C853 22uF
C854 22uF
C979 22uF
C1095 22uF
C855 22uF
C1193 22uF
C1205 22uF
GND
NVVDD
2 X 470UF
C968 560uF
C1058 560uF
4 X 22UF
C960 22uF
C1065 22uF
C1077 22uF
C973 22uF
11 X 4.7UF
C1070 4.7uF
C1115 4.7uF
C1113 4.7uF
C1033 4.7uF
C1114 4.7uF
C1072 4.7uF
C1018 4.7uF
C1071 4.7uF
C974 4.7uF
C944 4.7uF
C1117 4.7uF
58 X 1UF
C1012 C1014 C1121 C1022 C1100 C984 C1127 C1049 C1110 C1098
C1035 C1096 C987 C995 C1054 C969 C1063 C1029 C975 C970
C926 C1048 C951 C1097 C929 C977 C1030 C927 C1059 C990
C1094 C1123 C1015 C992 C966 C1051 C1074 C946 C1119 C1067
C1129 C1124 C1125 C965 C930 C953 C954 C989 C976 C928
C1087 C941 C1131 C922 C1090 C1055 C1052 C1120
Additional MLCCs: 8 X 22UF, CO-LAYOUT WITH POSCAPs
C1084 C942 C1038 C943 C994 C993 C1085 C1039
C963 560uF
Co-layout with other MLCC
2 X 22UF
C1101 22uF
C935 22uF
C1062 560uF
Co-layout with other MLCC
5 X 4.7UF
C1004 4.7uF
C1069 4.7uF
C1116 4.7uF
C959 4.7uF
C1020 4.7uF
22 X 1UF
C1105 C1028 C1013 C1099 C1050 C1122 C1031 C1032
C988 C1075 C932 C1126 C1009 C1042 C991 C955
C1043 C947 C964 C1060 C1092 C931
1V8_MAIN
3 X 4.7UF, 3 X 1UF,7 X 0.1UF
C1008 4.7uF
C1133 1uF
C1159 0.1uF
C1167 0.1uF
C938 4.7uF
C998 1uF
C1147 0.1uF
C1169 0.1uF
C997 4.7uF
C986 1uF
C1150 0.1uF
C1134 0.1uF
C1130 0.1uF
1V8_AON
1 X 4.7UF, 1 X 1UF,2 X 0.1UF
C73 4.7uF
C72 1uF
C1106 0.1uF
C1111 0.1uF

MICRO-STAR INT'L CO.,LTD

MS-V360

Size	Document Description	Rev
Custom	GPU Decoupling	2.0

Date: Friday, March 03, 2017 Sheet 20 of 50

Page21: IFPAB DVI-D-DL

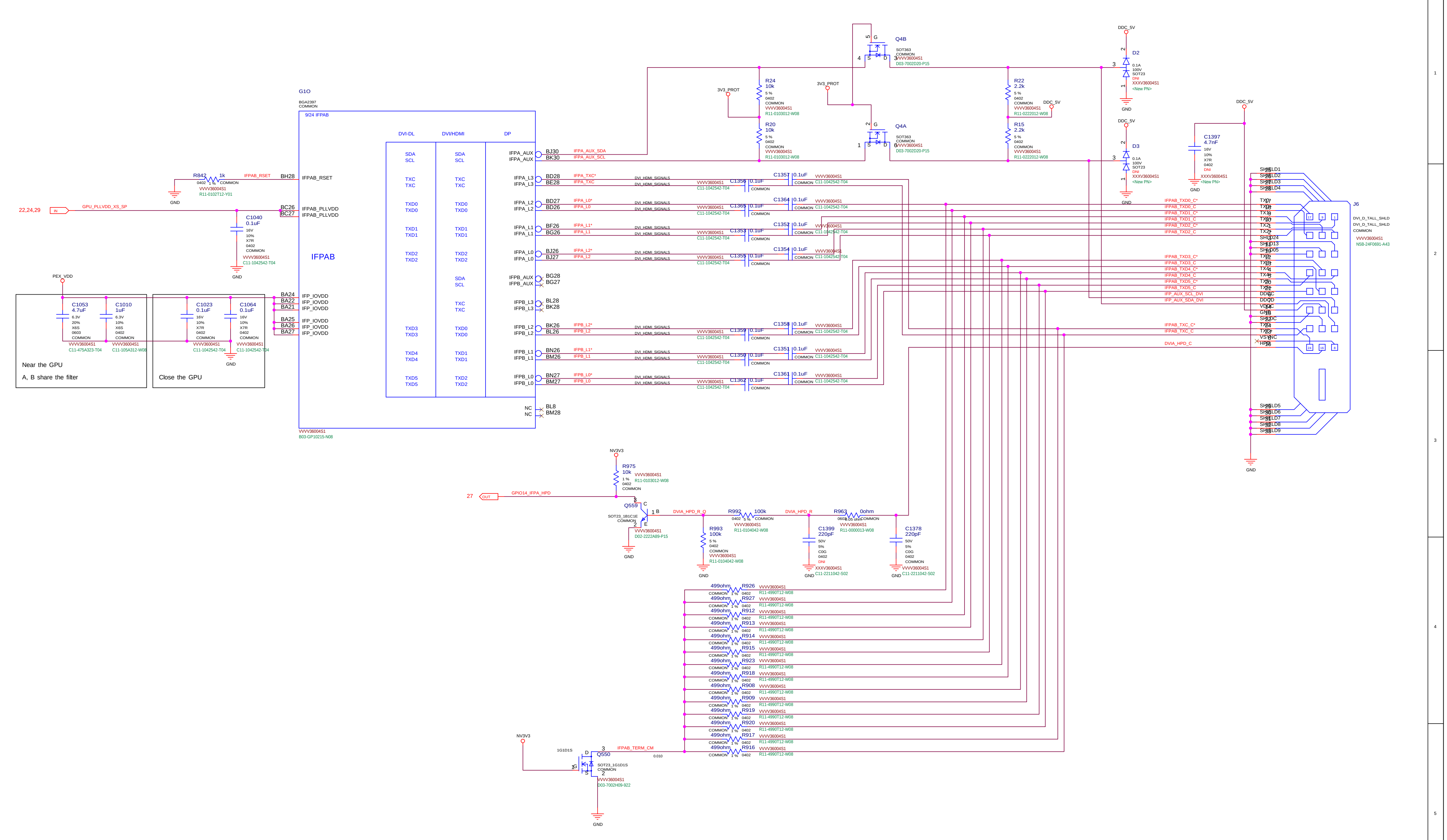
G1O
BGA2397
COMMON
9/24 IFPAB
IFPAB
DVI-DL
DVI/HDMI
DP
IFPAB_RSET
IFPAB_PLLVDD
IFP_IOVDD
IFPA_AUX
IFPA_L3
IFPA_L2
IFPA_L1
IFPA_L0
IFPB_AUX
IFPB_L3
IFPB_L2
IFPB_L1
IFPB_L0
NC
SDA
SCL
TXC
TXD0
TXD1
TXD2
TXD3
TXD4
TXD5
VVVV36004S1
B03-GP10215-N08
R842 1k
GND
22,24,29
IN
GPU_PLLVDD_XS_SP
C1040 0.1uF
PEX_VDD
C1053 4.7uF
C1010 1uF
C1023 0.1uF
C1064 0.1uF
Near the GPU
A, B share the filter
Close the GPU
IFPA_AUX_SDA
IFPA_AUX_SCL
IFPA_TXC*
IFPA_TXC
IFPA_L0*
IFPA_L0
IFPA_L1*
IFPA_L1
IFPA_L2*
IFPA_L2
IFPB_L2*
IFPB_L2
IFPB_L1*
IFPB_L1
IFPB_L0*
IFPB_L0
DVI_HDMI_SIGNALS
C1357 0.1uF
C1356 0.1uF
C1364 0.1uF
C1363 0.1uF
C1352 0.1uF
C1353 0.1uF
C1354 0.1uF
C1355 0.1uF
C1358 0.1uF
C1359 0.1uF
C1351 0.1uF
C1350 0.1uF
C1361 0.1uF
C1362 0.1uF
Q4B
Q4A
SOT363
D03-7002D20-P15
3V3_PROT
R24 10k
R20 10k
R22 2.2k
R15 2.2k
DDC_5V
D2
D3
C1397 4.7nF
<New PN>
DNI
J6
DVI_D_TALL_SHLD
N5B-24F0691-A43
IFPAB_TXD0_C*
IFPAB_TXD0_C
IFPAB_TXD1_C*
IFPAB_TXD1_C
IFPAB_TXD2_C*
IFPAB_TXD2_C
IFPAB_TXD3_C*
IFPAB_TXD3_C
IFPAB_TXD4_C*
IFPAB_TXD4_C
IFPAB_TXD5_C*
IFPAB_TXD5_C
IFP_AUX_SCL_DVI
IFP_AUX_SDA_DVI
IFPAB_TXC_C*
IFPAB_TXC_C
DVIA_HPD_C
NV3V3
R975 10k
27
OUT
GPIO14_IFPA_HPD
Q559
SOT23_1B1C1E
D02-2222A89-P15
DVIA_HPD_R_Q
R992 100k
DVIA_HPD_R
R963 0ohm
R993 100k
C1399 220pF
C1378 220pF
R926 R927 R912 R913 R914 R915 R923 R918 R908 R909 R919 R920 R917 R916
499ohm
R11-4990T12-W08
Q550
1G1D1S
SOT23_1G1D1S
D03-7002H09-922
IFPAB_TERM_CM
0.010

MICRO-STAR INT'L CO.,LTD

MS-V360

Size	Document Description	Rev
Custom	IFPAB DVI-D-DL	2.0

Date: Friday, March 03, 2017 Sheet 21 of 50

Page22: IFPE DP

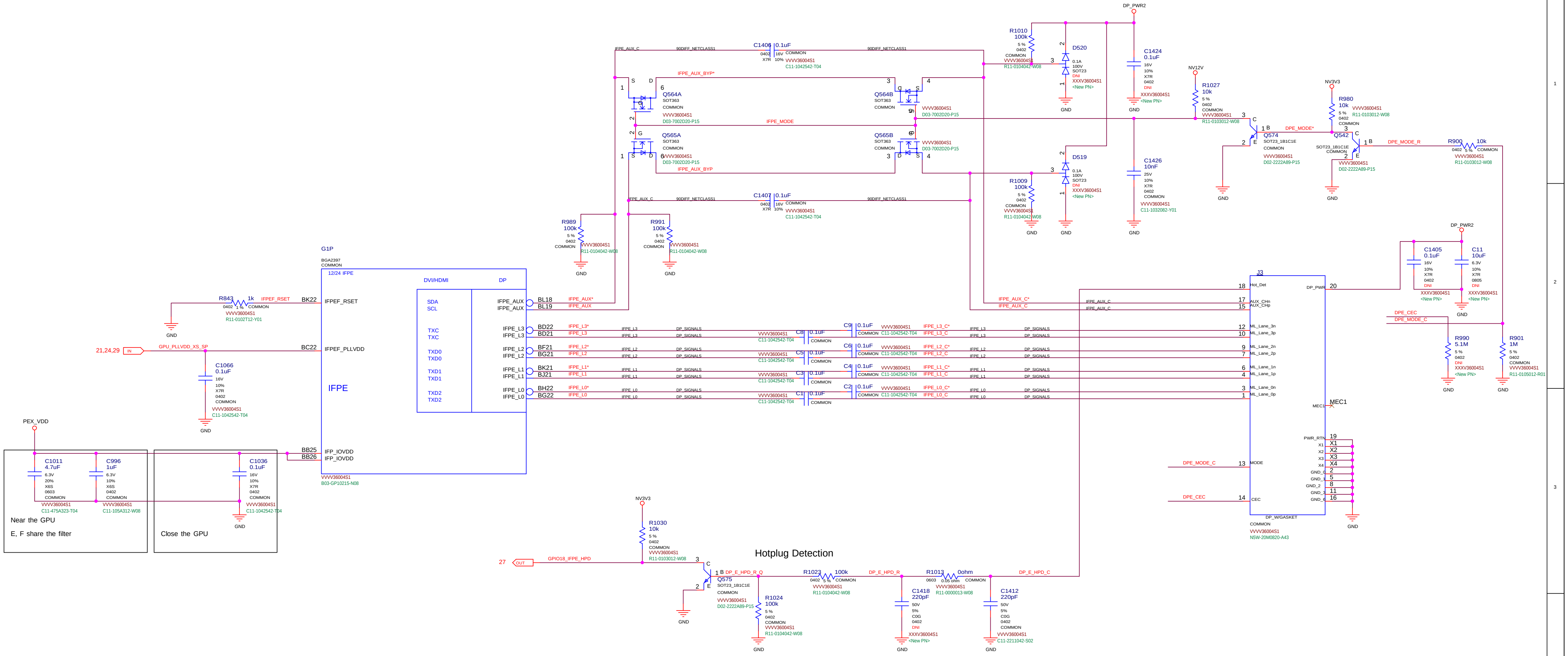

DP_PWR2
R1010 100k 5 % 0402 COMMON VVVV36004S1 R11-0104042-W08
D520 0.1A 100V SOT23 DNI XXXV36004S1 <New PN>
C1424 0.1uF 16V 10% X7R 0402 DNI XXXV36004S1 <New PN>
C1406 0.1uF 0402 16V X7R 10% COMMON VVVV36004S1 C11-1042542-T04
IFPE_AUX_C
90DIFF_NETCLASS1
IFPE_AUX_BYP*
IFPE_MODE
IFPE_AUX_BYP
Q564A SOT363 COMMON VVVV36004S1 D03-7002D20-P15
Q564B SOT363 COMMON VVVV36004S1 D03-7002D20-P15
Q565A SOT363 COMMON VVVV36004S1 D03-7002D20-P15
Q565B SOT363 COMMON VVVV36004S1 D03-7002D20-P15
NV12V
R1027 10k 5 % 0402 COMMON VVVV36004S1 R11-0103012-W08
Q574 SOT23_1B1C1E COMMON VVVV36004S1 D02-2222A89-P15
DPE_MODE*
NV3V3
R980 10k 5 % 0402 COMMON VVVV36004S1 R11-0103012-W08
Q542 SOT23_1B1C1E COMMON VVVV36004S1 D02-2222A89-P15
DPE_MODE_R
R900 10k 0402 5 % COMMON VVVV36004S1 R11-0103012-W08
D519 0.1A 100V SOT23 DNI XXXV36004S1 <New PN>
C1426 10nF 25V 10% X7R 0402 COMMON VVVV36004S1 C11-1032082-Y01
R1009 100k 5 % 0402 COMMON VVVV36004S1 R11-0104042-W08
C1407 0.1uF 0402 16V X7R 10% COMMON VVVV36004S1 C11-1042542-T04
R989 100k 5 % 0402 COMMON VVVV36004S1 R11-0104042-W08
R991 100k 5 % 0402 COMMON VVVV36004S1 R11-0104042-W08
GND
G1P BGA2397 COMMON
12/24 IFPE
DVI/HDMI
DP
SDA SCL TXC TXC TXD0 TXD0 TXD1 TXD1 TXD2 TXD2
IFPE
R843 1k 0402 5 % COMMON VVVV36004S1 R11-0102T12-Y01
IFPEF_RSET BK22
21,24,29 IN GPU_PLLVDD_XS_SP BC22 IFPEF_PLLVDD
C1066 0.1uF 16V 10% X7R 0402 COMMON VVVV36004S1 C11-1042542-T04
BL18 IFPE_AUX* BL19 IFPE_AUX
BD22 BD21 IFPE_L3* IFPE_L3
BF21 BG21 IFPE_L2* IFPE_L2
BK21 BJ21 IFPE_L1* IFPE_L1
BH22 BG22 IFPE_L0* IFPE_L0
DP_SIGNALS
C8 C9 C6 C5 C4 C3 C2 C1 0.1uF COMMON VVVV36004S1 C11-1042542-T04
IFPE_L3_C* IFPE_L3_C IFPE_L2_C* IFPE_L2_C IFPE_L1_C* IFPE_L1_C IFPE_L0_C* IFPE_L0_C
IFPE_AUX_C* IFPE_AUX_C
PEX_VDD
C1011 4.7uF 6.3V 20% X6S 0603 COMMON VVVV36004S1 C11-475A323-T04
C996 1uF 6.3V 10% X6S 0402 COMMON VVVV36004S1 C11-105A312-W08
C1036 0.1uF 16V 10% X7R 0402 COMMON VVVV36004S1 C11-1042542-T04
Near the GPU
E, F share the filter
Close the GPU
BB25 BB26 IFP_IOVDD IFP_IOVDD
VVVV36004S1 B03-GP10215-N08
J3
18 Hot_Det
DP_PWR 20
17 AUX_CHn 15 AUX_CHp
12 ML_Lane_3n 10 ML_Lane_3p
9 ML_Lane_2n 7 ML_Lane_2p
6 ML_Lane_1n 4 ML_Lane_1p
3 ML_Lane_0n 1 ML_Lane_0p
MEC1
PWR_RTN 19 X1 X2 X3 X4 GND_0 2 GND_1 5 GND_2 8 GND_3 11 GND_4 16
DPE_MODE_C 13 MODE
DPE_CEC 14 CEC
DP_W/GASKET COMMON VVVV36004S1 N5W-20M0820-A43
C1405 0.1uF 16V 10% X7R 0402 DNI XXXV36004S1 <New PN>
C11 10uF 6.3V 10% X7R 0805 DNI XXXV36004S1 <New PN>
DPE_CEC DPE_MODE_C
R990 5.1M 5 % 0402 DNI XXXV36004S1 <New PN>
R901 1M 5 % 0402 COMMON VVVV36004S1 R11-0105012-R01
Hotplug Detection
NV3V3
R1030 10k 5 % 0402 COMMON VVVV36004S1 R11-0103012-W08
27 OUT GPIO18_IFPE_HPD
Q575 SOT23_1B1C1E COMMON VVVV36004S1 D02-2222A89-P15
DP_E_HPD_R_Q
R1024 100k 5 % 0402 COMMON VVVV36004S1 R11-0104042-W08
R1023 100k 0402 5 % COMMON VVVV36004S1 R11-0104042-W08
DP_E_HPD_R
R1013 0ohm 0603 0.05 ohm COMMON VVVV36004S1 R11-0000013-W08
DP_E_HPD_C
C1418 220pF 50V 5% C0G 0402 DNI XXXV36004S1 <New PN>
C1412 220pF 50V 5% C0G 0402 COMMON VVVV36004S1 C11-2211042-S02

MICRO-STAR INT'L CO.,LTD

MS-V360

Size	Document Description	Rev
Custom	IFPE DP	2.0

Date: Friday, March 03, 2017 Sheet 22 of 50

Page23: IFPF DP

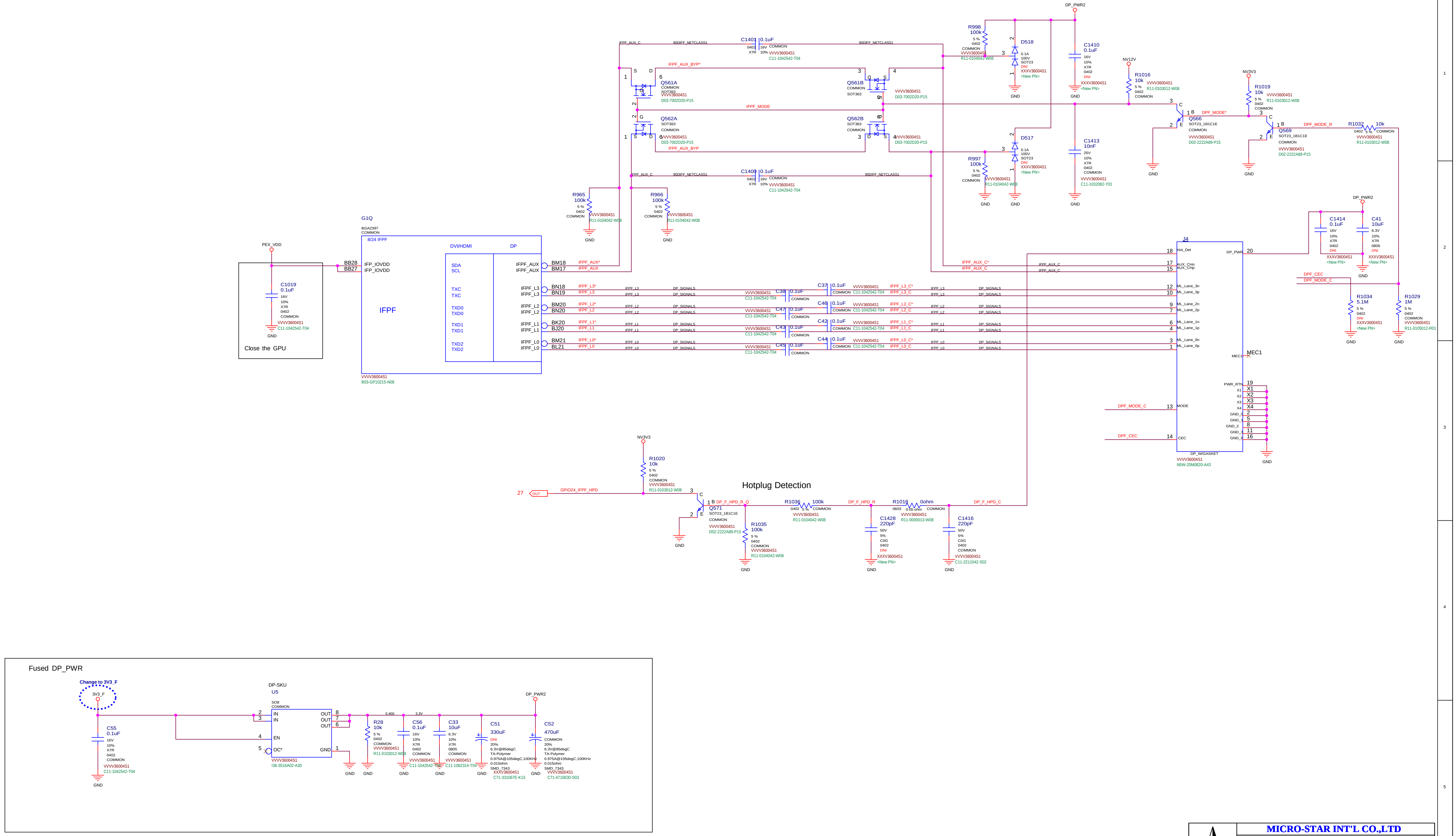

G1Q
BGA2397
COMMON
8/24 IFPF
IFPF
DVI/HDMI
DP
BB28 IFP_IOVDD
BB27 IFP_IOVDD
SDA
SCL
TXC
TXD0
TXD1
TXD2
IFPF_AUX
BM18
BM17
IFPF_L3 BN18 BN19
IFPF_L2 BM20 BN20
IFPF_L1 BK20 BJ20
IFPF_L0 BM21 BL21
VVVV36004S1
B03-GP10215-N08
PEX_VDD
C1019 0.1uF 16V 10% X7R 0402 COMMON
C11-1042542-T04
Close the GPU
IFPF_AUX*
IFPF_AUX_C
IFPF_AUX_BYP*
IFPF_AUX_BYP
IFPF_MODE
90DIFF_NETCLASS1
C1401 0.1uF
C1400 0.1uF
Q561A SOT363
Q561B SOT363
Q562A SOT363
Q562B SOT363
D03-7002D20-P15
R965 100k
R966 100k
R11-0104042-W08
R998 100k
R997 100k
D518
D517
0.1A 100V SOT23
XXXV36004S1
<New PN>
DP_PWR2
C1410 0.1uF
C1413 10nF
C11-1032082-Y01
NV12V
R1016 10k
R11-0103012-W08
Q566 SOT23_1B1C1E
D02-2222A89-P15
DPF_MODE*
NV3V3
R1019 10k
Q569 SOT23_1B1C1E
DPF_MODE_R
R1032 10k
R11-0103012-W08
C37 0.1uF
C38 0.1uF
C46 0.1uF
C47 0.1uF
C42 0.1uF
C43 0.1uF
C44 0.1uF
C45 0.1uF
DP_SIGNALS
IFPF_L3_C
IFPF_L2_C
IFPF_L1_C
IFPF_L0_C
C1414 0.1uF
C41 10uF
DNI
J4
Hot_Det
DP_PWR
AUX_CHn
AUX_CHp
ML_Lane_3n
ML_Lane_3p
ML_Lane_2n
ML_Lane_2p
ML_Lane_1n
ML_Lane_1p
ML_Lane_0n
ML_Lane_0p
MEC1
PWR_RTN
X1
X2
X3
X4
GND_0
GND_1
GND_2
GND_3
GND_4
MODE
CEC
DP_W/GASKET
N5W-20M0820-A43
DPF_CEC
DPF_MODE_C
R1034 5.1M
R1029 1M
R11-0105012-R01
NV3V3
R1020 10k
27
OUT
GPIO24_IFPF_HPD
Hotplug Detection
Q571 SOT23_1B1C1E
DP_F_HPD_R_Q
R1035 100k
R1036 100k
DP_F_HPD_R
R1018 0ohm
R11-0000013-W08
DP_F_HPD_C
C1428 220pF
C1416 220pF
C11-2211042-S02
GND
Fused DP_PWR
Change to 3V3_F
3V3_F
C55 0.1uF
DP-SKU
U5
SO8
IN
EN
OC*
OUT
GND
I36-3516A02-A30
R28 10k
C56 0.1uF
C33 10uF
C11-1062314-T04
C51 330uF
C71-331067E-K15
C52 470uF
C71-4710630-S03
6.3V@85degC
TA-Polymer
0.975A@105degC,100KHz
0.015ohm
SMD_7343
DP_PWR2

MICRO-STAR INT'L CO.,LTD

MS-V360

Size	Document Description	Rev
Custom	IFPF DP	2.0

Date: Friday, March 03, 2017 | Sheet 23 of 50

Page24: IFPC HDMI 2.0/DP

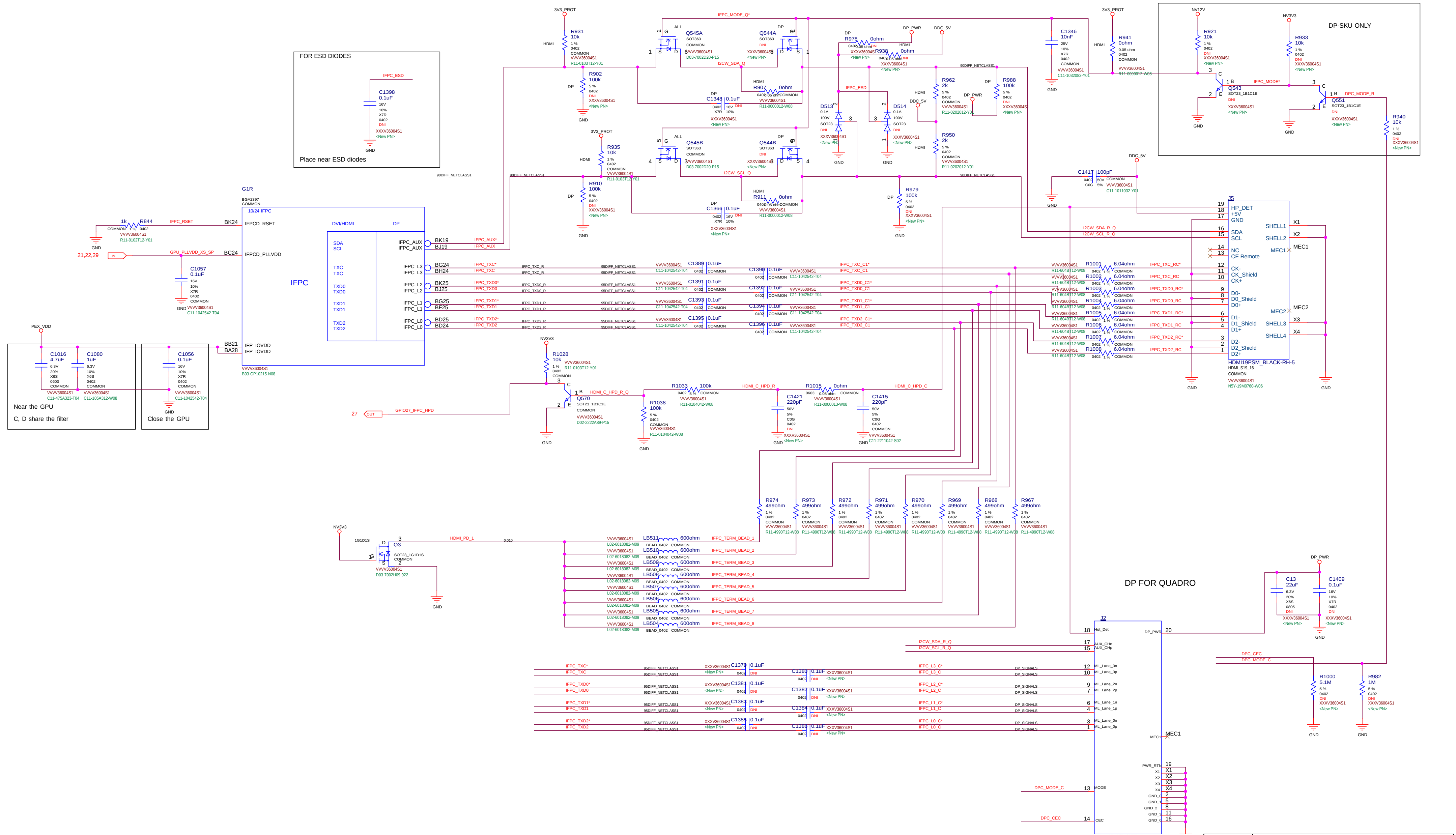
FOR ESD DIODES
IFPC_ESD
C1398 0.1uF
Place near ESD diodes
G1R
BGA2397
COMMON
10/24 IFPC
IFPCD_RSET
IFPCD_PLLVDD
IFP_IOVDD
DVI/HDMI
DP
IFPC
SDA
SCL
TXC
TXD0
TXD1
TXD2
IFPC_AUX
IFPC_L3
IFPC_L2
IFPC_L1
IFPC_L0
BK24
BC24
BB21
BA28
BK19
BJ19
BG24
BH24
BK25
BJ25
BG25
BF25
BD25
BD24
R844 1k
IFPC_RSET
GPU_PLLVDD_XS_SP
21,22,29
C1057 0.1uF
PEX_VDD
C1016 4.7uF
C1080 1uF
C1056 0.1uF
Near the GPU
C, D share the filter
Close the GPU
3V3_PROT
R931 10k
R902 100k
R935 10k
R910 100k
Q545A
Q545B
Q544A
Q544B
SOT363
IFPC_MODE_Q*
I2CW_SDA_Q
I2CW_SCL_Q
R907 0ohm
R911 0ohm
C1348 0.1uF
C1366 0.1uF
R978 0ohm
R938 0ohm
DP_PWR
DDC_5V
D513
D514
IFPC_ESD
R962 2k
R988 100k
R950 2k
R979 100k
C1346 10nF
R941 0ohm
C1417 100pF
NV12V
NV3V3
DP-SKU ONLY
R921 10k
R933 10k
Q543
Q551
SOT23_1B1C1E
IFPC_MODE*
DPC_MODE_R
R940 10k
J5
HP_DET
+5V
GND
SDA
SCL
NC
CE Remote
CK-
CK_Shield
CK+
D0-
D0_Shield
D0+
D1-
D1_Shield
D1+
D2-
D2_Shield
D2+
SHELL1
SHELL2
SHELL3
SHELL4
MEC1
MEC2
HDMI19PSM_BLACK-RH-5
I2CW_SDA_R_Q
I2CW_SCL_R_Q
R1001 6.04ohm
R1002 6.04ohm
R1003 6.04ohm
R1004 6.04ohm
R1005 6.04ohm
R1006 6.04ohm
R1007 6.04ohm
R1008 6.04ohm
C1389 0.1uF
C1390 0.1uF
C1391 0.1uF
C1392 0.1uF
C1393 0.1uF
C1394 0.1uF
C1395 0.1uF
C1396 0.1uF
NV3V3
R1028 10k
Q570
HDMI_C_HPD_R_Q
R1033 100k
HDMI_C_HPD_R
R1015 0ohm
HDMI_C_HPD_C
R1038 100k
C1421 220pF
C1415 220pF
GPIO27_IFPC_HPD
27
R974 499ohm
R973 499ohm
R972 499ohm
R971 499ohm
R970 499ohm
R969 499ohm
R968 499ohm
R967 499ohm
Q3
1G1D1S
HDMI_PD_1
LB511 600ohm
LB510 600ohm
LB509 600ohm
LB508 600ohm
LB507 600ohm
LB506 600ohm
LB505 600ohm
LB504 600ohm
IFPC_TERM_BEAD_1
IFPC_TERM_BEAD_2
IFPC_TERM_BEAD_3
IFPC_TERM_BEAD_4
IFPC_TERM_BEAD_5
IFPC_TERM_BEAD_6
IFPC_TERM_BEAD_7
IFPC_TERM_BEAD_8
DP FOR QUADRO
C13 22uF
C1409 0.1uF
J2
Hot_Det
DP_PWR
AUX_CHn
AUX_CHp
ML_Lane_3n
ML_Lane_3p
ML_Lane_2n
ML_Lane_2p
ML_Lane_1n
ML_Lane_1p
ML_Lane_0n
ML_Lane_0p
MODE
CEC
PWR_RTN
DP_W/GASKET
C1379 0.1uF
C1380 0.1uF
C1381 0.1uF
C1382 0.1uF
C1383 0.1uF
C1384 0.1uF
C1385 0.1uF
C1386 0.1uF
DPC_CEC
DPC_MODE_C
R1000 5.1M
R982 1M
GND

MICRO-STAR INT'L CO.,LTD

MS-V360

Size	Document Description	Rev
Custom	IFPC HDMI 2.0/DP	2.0

Date: Friday, March 03, 2017 Sheet 24 of 50

Page25: IFPD HDMI

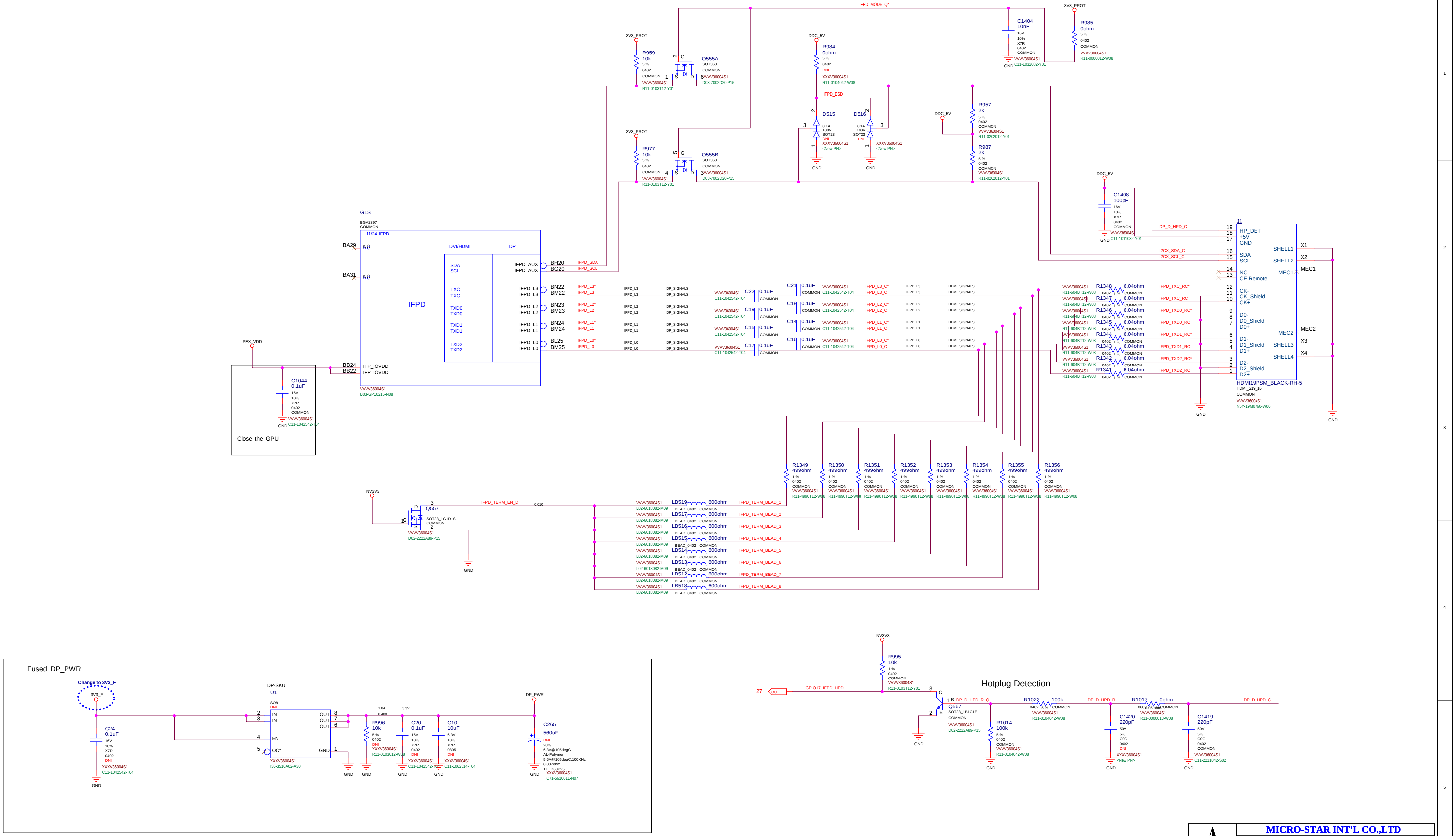
IFPD_MODE_Q*
3V3_PROT
R959 10k 5% 0402 COMMON VVVV36004S1 R11-0103T12-Y01
Q555A SOT363 COMMON VVVV36004S1 D03-7002D20-P15
DDC_5V
R984 0ohm 5% 0402 DNI XXXV36004S1 R11-0104042-W08
C1404 10nF 16V 10% X7R 0402 COMMON VVVV36004S1 C11-1032082-Y01
R985 0ohm 5% 0402 COMMON VVVV36004S1 R11-0000012-W08
IFPD_ESD
D515 0.1A 100V SOT23 DNI XXXV36004S1 <New PN>
D516 0.1A 100V SOT23 DNI XXXV36004S1 <New PN>
R957 2k 5% 0402 COMMON VVVV36004S1 R11-0202012-Y01
R987 2k 5% 0402 COMMON VVVV36004S1 R11-0202012-Y01
R977 10k 5% 0402 COMMON VVVV36004S1 R11-0103T12-Y01
Q555B SOT363 COMMON VVVV36004S1 D03-7002D20-P15
C1408 100pF 16V 10% X7R 0402 COMMON VVVV36004S1 C11-1011032-Y01
G1S BGA2397 COMMON
11/24 IFPD
IFPD
DVI/HDMI
DP
SDA SCL TXC TXC TXD0 TXD0 TXD1 TXD1 TXD2 TXD2
IFPD_AUX IFPD_AUX IFPD_L3 IFPD_L3 IFPD_L2 IFPD_L2 IFPD_L1 IFPD_L1 IFPD_L0 IFPD_L0
BA29 NC BA31 NC
BH20 BG20 BN22 BM22 BN23 BM23 BN24 BM24 BL25 BM25
BB24 BB22 IFP_IOVDD IFP_IOVDD
VVVV36004S1 B03-GP10215-N08
IFPD_SDA IFPD_SCL
IFPD_L3* IFPD_L3 IFPD_L2* IFPD_L2 IFPD_L1* IFPD_L1 IFPD_L0* IFPD_L0
DP_SIGNALS
C22 C19 C15 C17 0.1uF COMMON VVVV36004S1 C11-1042542-T04
C21 C18 C14 C16 0.1uF COMMON VVVV36004S1 C11-1042542-T04
IFPD_L3_C* IFPD_L3_C IFPD_L2_C* IFPD_L2_C IFPD_L1_C* IFPD_L1_C IFPD_L0_C* IFPD_L0_C
HDMI_SIGNALS
R1348 R1347 R1346 R1345 R1344 R1343 R1342 R1341 6.04ohm 0402 1% COMMON VVVV36004S1 R11-604BT12-W08
IFPD_TXC_RC* IFPD_TXC_RC IFPD_TXD0_RC* IFPD_TXD0_RC IFPD_TXD1_RC* IFPD_TXD1_RC IFPD_TXD2_RC* IFPD_TXD2_RC
DP_D_HPD_C
I2CX_SDA_C I2CX_SCL_C
J1
HP_DET +5V GND SDA SCL NC CE Remote CK- CK_Shield CK+ D0- D0_Shield D0+ D1- D1_Shield D1+ D2- D2_Shield D2+
SHELL1 SHELL2 MEC1 MEC2 SHELL3 SHELL4 X1 X2 X3 X4
HDMI19PSM_BLACK-RH-5 HDMI_S19_16 COMMON VVVV36004S1 N5Y-19M0760-W06
PEX_VDD
C1044 0.1uF 16V 10% X7R 0402 COMMON VVVV36004S1 C11-1042542-T04
Close the GPU
GND
R1349 R1350 R1351 R1352 R1353 R1354 R1355 R1356 499ohm 1% 0402 COMMON VVVV36004S1 R11-4990T12-W08
NV3V3
Q557 SOT23_1G1D1S COMMON VVVV36004S1 D02-2222A89-P15
IFPD_TERM_EN_D
LB519 LB517 LB516 LB515 LB514 LB513 LB512 LB518 600ohm BEAD_0402 COMMON VVVV36004S1 L02-6018082-M09
IFPD_TERM_BEAD_1 IFPD_TERM_BEAD_2 IFPD_TERM_BEAD_3 IFPD_TERM_BEAD_4 IFPD_TERM_BEAD_5 IFPD_TERM_BEAD_6 IFPD_TERM_BEAD_7 IFPD_TERM_BEAD_8
Fused DP_PWR
Change to 3V3_F
3V3_F
C24 0.1uF 16V 10% X7R 0402 DNI XXXV36004S1 C11-1042542-T04
DP-SKU U1 SO8 DNI IN IN EN OUT OUT OUT OC* GND XXXV36004S1 I36-3516A02-A30
1.0A 0.400 3.3V
R996 10k 5% 0402 DNI XXXV36004S1 R11-0103012-W08
C20 0.1uF 16V 10% X7R 0402 DNI XXXV36004S1 C11-1042542-T04
C10 10uF 6.3V 10% X7R 0805 DNI XXXV36004S1 C11-1062314-T04
DP_PWR
C265 560uF DNI 20% 6.3V@105degC AL-Polymer 5.6A@105degC,100KHz 0.007ohm TH_D63P25 XXXV36004S1 C71-5610611-N07
NV3V3
R995 10k 1% 0402 COMMON VVVV36004S1 R11-0103T12-Y01
27 OUT GPIO17_IFPD_HPD
Hotplug Detection
Q567 SOT23_1B1C1E COMMON VVVV36004S1 D02-2222A89-P15
DP_D_HPD_R_Q
R1022 100k 0402 5% COMMON VVVV36004S1 R11-0104042-W08
DP_D_HPD_R
R1017 0ohm 0402 5% COMMON VVVV36004S1 R11-0000013-W08
DP_D_HPD_C
R1014 100k 5% 0402 COMMON VVVV36004S1 R11-0104042-W08
C1420 220pF 50V 5% C0G 0402 DNI XXXV36004S1 <New PN>
C1419 220pF 50V 5% C0G 0402 COMMON VVVV36004S1 C11-2211042-S02

MICRO-STAR INT'L CO.,LTD

MS-V360

Size	Document Description	Rev
Custom	IFPD HDMI	2.0

Date: Friday, March 03, 2017 Sheet 25 of 50

Page26: MIOA/B Interface

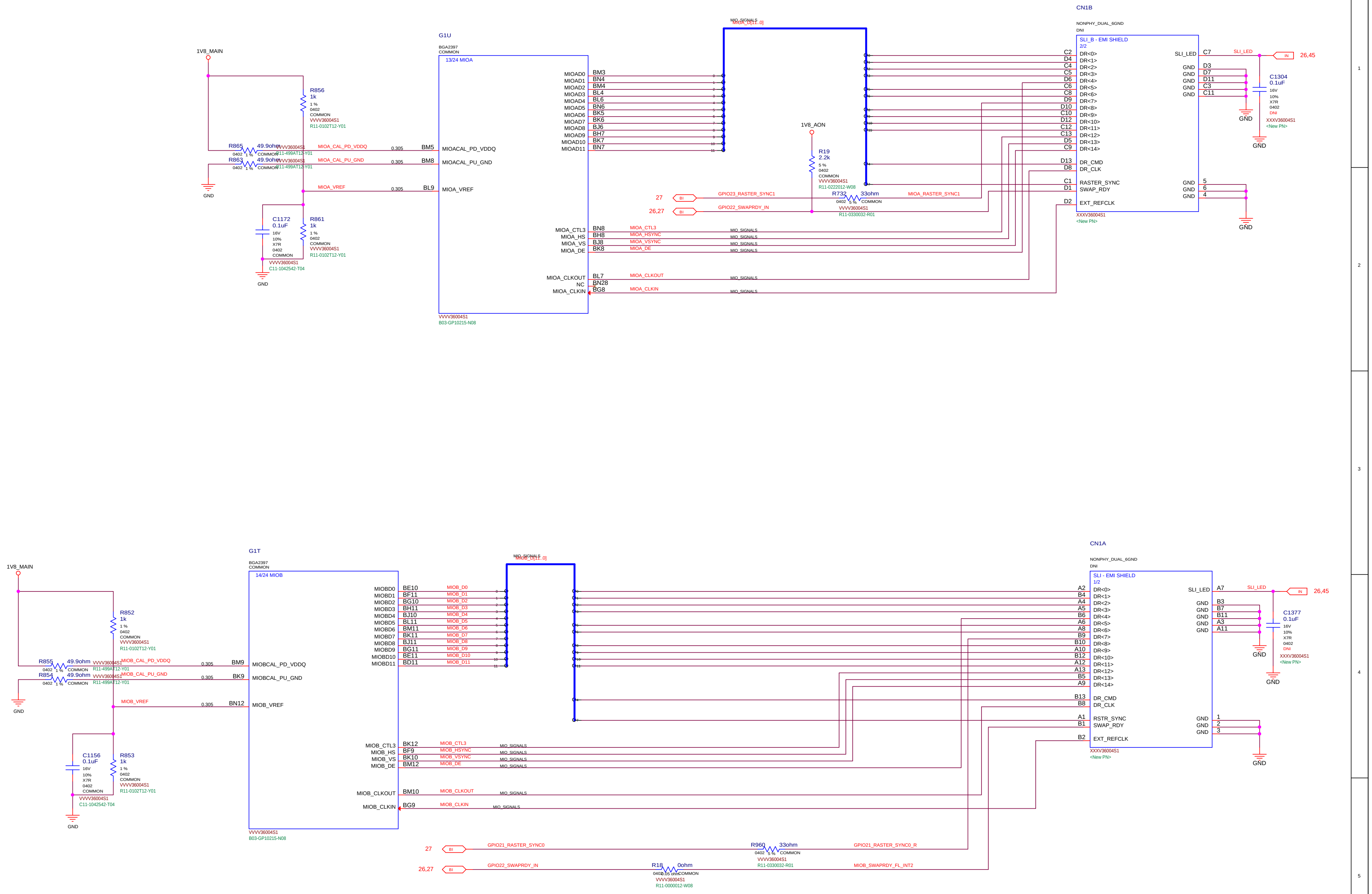

1V8_MAIN
R856 1k 1% 0402 COMMON VVVV36004S1 R11-0102T12-Y01
R865 49.9ohm 0402 1% COMMON VVVV36004S1 R11-499AT12-Y01
R863 49.9ohm 0402 1% COMMON VVVV36004S1 R11-499AT12-Y01
GND
C1172 0.1uF 16V 10% X7R 0402 COMMON VVVV36004S1 C11-1042542-T04
R861 1k 1% 0402 COMMON VVVV36004S1 R11-0102T12-Y01
MIOA_CAL_PD_VDDQ
MIOA_CAL_PU_GND
MIOA_VREF
0.305
G1U
BGA2397 COMMON
13/24 MIOA
BM5 MIOACAL_PD_VDDQ
BM8 MIOACAL_PU_GND
BL9 MIOA_VREF
MIOAD0 BM3
MIOAD1 BN4
MIOAD2 BM4
MIOAD3 BL4
MIOAD4 BL6
MIOAD5 BK5
MIOAD6 BK6
MIOAD7 BJ6
MIOAD8 BH7
MIOAD9 BK7
MIOAD10 BN7
MIOAD11
MIOA_CTL3 BN8
MIOA_HS BH8
MIOA_VS BJ8
MIOA_DE BK8
MIOA_CLKOUT BL7
NC BN28
MIOA_CLKIN BG8
MIOA_CTL3
MIOA_HSYNC
MIOA_VSYNC
MIOA_DE
MIOA_CLKOUT
MIOA_CLKIN
MIO_SIGNALS
VVVV36004S1 B03-GP10215-N08
MIO_SIGNALS MIOA_D[11..0]
1V8_AON
R19 2.2k 5% 0402 COMMON VVVV36004S1 R11-0222012-W08
27 BI GPIO23_RASTER_SYNC1
26,27 BI GPIO22_SWAPRDY_IN
R732 33ohm 0402 5% COMMON VVVV36004S1 R11-0330032-R01
MIOA_RASTER_SYNC1
CN1B
NONPHY_DUAL_6GND DNI
SLI_B - EMI SHIELD 2/2
C2 DR<0>
D4 DR<1>
C4 DR<2>
C5 DR<3>
D6 DR<4>
C6 DR<5>
C8 DR<6>
D9 DR<7>
D10 DR<8>
C10 DR<9>
D12 DR<10>
C12 DR<11>
C13 DR<12>
D5 DR<13>
C9 DR<14>
D13 DR_CMD
D8 DR_CLK
C1 RASTER_SYNC
D1 SWAP_RDY
D2 EXT_REFCLK
SLI_LED C7
GND D3
GND D7
GND D11
GND C3
GND C11
GND 5
GND 6
GND 4
SLI_LED IN 26,45
C1304 0.1uF 16V 10% X7R 0402 DNI XXXV36004S1 <New PN>
XXXV36004S1 <New PN>
1V8_MAIN
R852 1k 1% 0402 COMMON VVVV36004S1 R11-0102T12-Y01
R855 49.9ohm 0402 1% COMMON VVVV36004S1 R11-499AT12-Y01
R854 49.9ohm 0402 1% COMMON VVVV36004S1 R11-499AT12-Y01
MIOB_CAL_PD_VDDQ
MIOB_CAL_PU_GND
MIOB_VREF
C1156 0.1uF 16V 10% X7R 0402 COMMON VVVV36004S1 C11-1042542-T04
R853 1k 1% 0402 COMMON VVVV36004S1 R11-0102T12-Y01
G1T
BGA2397 COMMON
14/24 MIOB
BM9 MIOBCAL_PD_VDDQ
BK9 MIOBCAL_PU_GND
BN12 MIOB_VREF
MIOBD0 BE10 MIOB_D0
MIOBD1 BF11 MIOB_D1
MIOBD2 BG10 MIOB_D2
MIOBD3 BH11 MIOB_D3
MIOBD4 BJ10 MIOB_D4
MIOBD5 BL11 MIOB_D5
MIOBD6 BM11 MIOB_D6
MIOBD7 BK11 MIOB_D7
MIOBD8 BJ11 MIOB_D8
MIOBD9 BG11 MIOB_D9
MIOBD10 BE11 MIOB_D10
MIOBD11 BD11 MIOB_D11
MIOB_CTL3 BK12 MIOB_CTL3
MIOB_HS BF9 MIOB_HSYNC
MIOB_VS BK10 MIOB_VSYNC
MIOB_DE BM12 MIOB_DE
MIOB_CLKOUT BM10 MIOB_CLKOUT
MIOB_CLKIN BG9 MIOB_CLKIN
VVVV36004S1 B03-GP10215-N08
MIO_SIGNALS MIOB_D[11..0]
CN1A
NONPHY_DUAL_6GND DNI
SLI - EMI SHIELD 1/2
A2 DR<0>
B4 DR<1>
A4 DR<2>
A5 DR<3>
B6 DR<4>
A6 DR<5>
A8 DR<6>
B9 DR<7>
B10 DR<8>
A10 DR<9>
B12 DR<10>
A12 DR<11>
A13 DR<12>
B5 DR<13>
A9 DR<14>
B13 DR_CMD
B8 DR_CLK
A1 RSTR_SYNC
B1 SWAP_RDY
B2 EXT_REFCLK
SLI_LED A7
GND B3
GND B7
GND B11
GND A3
GND A11
GND 1
GND 2
GND 3
SLI_LED IN 26,45
C1377 0.1uF 16V 10% X7R 0402 DNI XXXV36004S1 <New PN>
XXXV36004S1 <New PN>
27 BI GPIO21_RASTER_SYNC0
26,27 BI GPIO22_SWAPRDY_IN
R960 33ohm 0402 5% COMMON VVVV36004S1 R11-0330032-R01
GPIO21_RASTER_SYNC0_R
R18 0ohm 0402 5% COMMON VVVV36004S1 R11-0000012-W08
MIOB_SWAPRDY_FL_INT2

MICRO-STAR INT'L CO.,LTD
MS-V360

Size	Document Description	Rev
Custom	MIOA/B Interface	2.0

Date: Friday, March 03, 2017 Sheet 26 of 50

Page27: MISC1: Fan, Thermal, JTAG, GPIO, STEREO

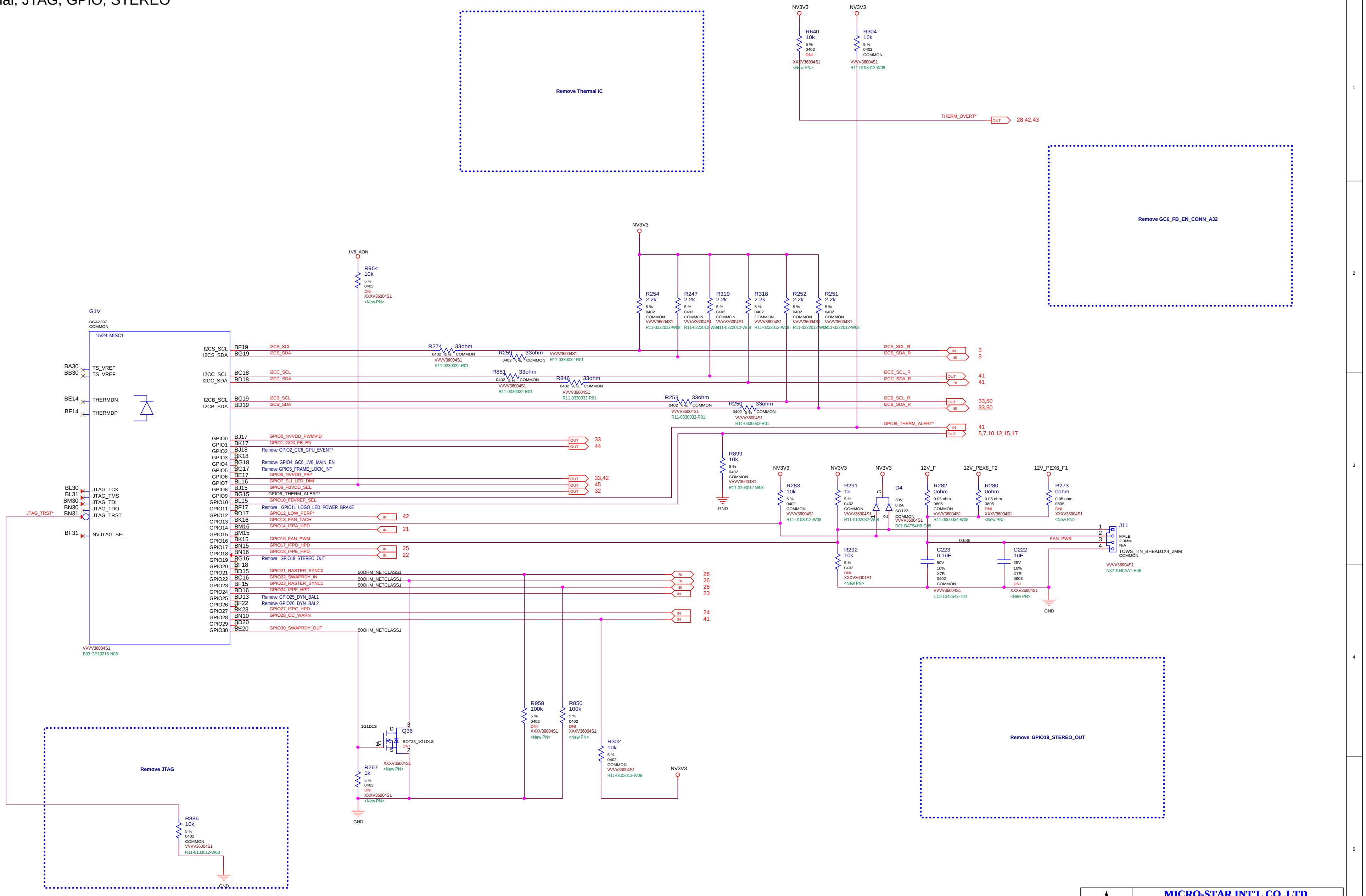
Remove Thermal IC
NV3V3
R640
10k
5 %
0402
DNI
XXXV36004S1
<New PN>
NV3V3
R304
10k
5 %
0402
COMMON
VVVV36004S1
R11-0103012-W08
THERM_OVERT*
OUT
28,42,43
Remove GC6_FB_EN_CONN_A32
NV3V3
R254 2.2k 5 % 0402 COMMON VVVV36004S1 R11-0222012-W08
R247 2.2k 5 % 0402 COMMON VVVV36004S1 R11-0222012-W08
R319 2.2k 5 % 0402 COMMON VVVV36004S1 R11-0222012-W08
R318 2.2k 5 % 0402 COMMON VVVV36004S1 R11-0222012-W08
R252 2.2k 5 % 0402 COMMON VVVV36004S1 R11-0222012-W08
R251 2.2k 5 % 0402 COMMON VVVV36004S1 R11-0222012-W08
1V8_AON
R964 10k 5 % 0402 DNI XXXV36004S1 <New PN>
G1V
BGA2397
COMMON
15/24 MISC1
I2CS_SCL BF19 I2CS_SCL
I2CS_SDA BG19 I2CS_SDA
I2CC_SCL BC18 I2CC_SCL
I2CC_SDA BD18 I2CC_SDA
I2CB_SCL BC19 I2CB_SCL
I2CB_SDA BD19 I2CB_SDA
BA30 TS_VREF
BB30 TS_VREF
BE14 THERMDN
BF14 THERMDP
BL30 JTAG_TCK
BL31 JTAG_TMS
BM30 JTAG_TDI
BN30 JTAG_TDO
BN31 JTAG_TRST
JTAG_TRST*
BF31 NVJTAG_SEL
GPIO0 BJ17 GPIO0_NVVDD_PWMVID
GPIO1 BK17 GPIO1_GC6_FB_EN
GPIO2 BJ18 Remove GPIO2_GC6_GPU_EVENT*
GPIO3 BK18
GPIO4 BG18 Remove GPIO4_GC6_1V8_MAIN_EN
GPIO5 BG17 Remove GPIO5_FRAME_LOCK_INT
GPIO6 BE17 GPIO6_NVVDD_PSI*
GPIO7 BL16 GPIO7_SLI_LED_DIM
GPIO8 BJ15 GPIO8_FBVDD_SEL
GPIO9 BG15 GPIO9_THERM_ALERT*
GPIO10 BL15 GPIO10_FBVREF_SEL
GPIO11 BF17 Remove GPIO11_LOGO_LED_POWER_BRAKE
GPIO12 BD17 GPIO12_LOW_PERF*
GPIO13 BK16 GPIO13_FAN_TACH
GPIO14 BM16 GPIO14_IFPA_HPD
GPIO15 BM15
GPIO16 BK15 GPIO16_FAN_PWM
GPIO17 BN15 GPIO17_IFPD_HPD
GPIO18 BN16 GPIO18_IFPE_HPD
GPIO19 BG16 Remove GPIO19_STEREO_OUT
GPIO20 BF18
GPIO21 BD15 GPIO21_RASTER_SYNC0
GPIO22 BC16 GPIO22_SWAPRDY_IN
GPIO23 BF15 GPIO23_RASTER_SYNC1
GPIO24 BD16 GPIO24_IFPF_HPD
GPIO25 BD13 Remove GPIO25_DYN_BAL1
GPIO26 BF22 Remove GPIO26_DYN_BAL2
GPIO27 BK23 GPIO27_IFPC_HPD
GPIO28 BN10 GPIO28_OC_WARN
GPIO29 BD20
GPIO30 BE20 GPIO30_SWAPRDY_OUT
VVVV36004S1
B03-GP10215-N08
R274 33ohm 0402 5 % COMMON VVVV36004S1 R11-0330032-R01
R259 33ohm 0402 5 % COMMON VVVV36004S1 R11-0330032-R01
R851 33ohm 0402 5 % COMMON VVVV36004S1 R11-0330032-R01
R846 33ohm 0402 5 % COMMON VVVV36004S1 R11-0330032-R01
R253 33ohm 0402 5 % COMMON VVVV36004S1 R11-0330032-R01
R250 33ohm 0402 5 % COMMON VVVV36004S1 R11-0330032-R01
I2CS_SCL_R IN 3
I2CS_SDA_R BI 3
I2CC_SCL_R OUT 41
I2CC_SDA_R BI 41
I2CB_SCL_R OUT 33,50
I2CB_SDA_R BI 33,50
GPIO9_THERM_ALERT* IN 41
OUT 5,7,10,12,15,17
OUT 33
OUT 44
OUT 33,42
OUT 45
OUT 32
IN 42
IN 21
IN 25
IN 22
50OHM_NETCLASS1
50OHM_NETCLASS1
50OHM_NETCLASS1
50OHM_NETCLASS1
BI 26
BI 26
BI 26
IN 23
IN 24
IN 41
R899 10k 5 % 0402 COMMON VVVV36004S1 R11-0103012-W08
GND
NV3V3
R283 10k 5 % 0402 COMMON VVVV36004S1 R11-0103012-W08
NV3V3
R291 1k 5 % 0402 COMMON VVVV36004S1 R11-0102032-W08
NV3V3
D4 30V 0.2A SOT23 COMMON VVVV36004S1 D01-BAT54H9-O05
3
1
2
12V_F
R282 0ohm 0.05 ohm 0805 COMMON VVVV36004S1 R11-0000034-W08
12V_PEX8_F2
R280 0ohm 0.05 ohm 0805 DNI XXXV36004S1 <New PN>
12V_PEX6_F1
R273 0ohm 0.05 ohm 0805 DNI XXXV36004S1 <New PN>
J11
1
2
3
4
MALE
2.0MM
N/A
TOWS_TIN_BHEAD1X4_2MM
COMMON
VVVV36004S1
N32-1040AA1-H06
0.635
FAN_PWR
R292 10k 5 % 0402 DNI XXXV36004S1 <New PN>
C223 0.1uF 50V 10% X7R 0402 COMMON VVVV36004S1 C11-1042542-T04
C222 1uF 25V 10% X7R 0603 DNI XXXV36004S1 <New PN>
GND
1G1D1S
D
G
S
1
2
3
Q36
SOT23_1G1D1S
DNI
XXXV36004S1
<New PN>
R267 1k 5 % 0402 DNI XXXV36004S1 <New PN>
GND
R958 100k 5 % 0402 DNI XXXV36004S1 <New PN>
R850 100k 5 % 0402 DNI XXXV36004S1 <New PN>
R302 10k 5 % 0402 COMMON VVVV36004S1 R11-0103012-W08
NV3V3
Remove JTAG
R886 10k 5 % 0402 COMMON VVVV36004S1 R11-0103012-W08
GND
Remove GPIO19_STEREO_OUT

MICRO-STAR INT'L CO.,LTD

MS-V360

Size	Document Description	Rev
Custom	MISC1: Fan, Thermal, JTAG, GPIO, STEREO	2.0

Date: Friday, March 03, 2017 | Sheet 27 of 50

Page28: MISC2: ROM, Straps

STRAP2	STRAP1	STRAP0	RAMCFG[4:0]
L	L	L	00000
L	H	L	00010
L	H	H	00011
H	H	L	00110
H	H	H	00111

ROM_SO	ROM_SI	ROM_SCLK	SOR_EXPOSED[3:0]	1:ENABLE 0:DISABLE
L	L	L	1111 DEFAULT	SOR0/1/2/3 ENABLE
L	L	H	1110	
L	H	L	1101	
L	H	H	1100	
H	L	L	1011	
H	L	H	1010	
H	H	L	1001	
H	H	H	1000	
L	L	M	0111	
L	M	L	0110	
L	M	H	0101	
L	H	M	0100	
H	L	M	0011	
H	M	L	0010	
H	M	H	0001	
H	H	M	0000	

STRAP5	STRAP4	STRAP3	SMB_ALT_ADDR	DEVID_SEL	PCIE_CFG	VGA_DEVICE
M	H	H	1	1	1	1
M	H	L	1	1	1	0
M	L	H	1	1	0	1
M	L	L	1	1	0	0
L	H	M	1	0	1	1
L	M	H	1	0	1	0
L	M	L	1	0	0	1
L	L	M	1	0	0	0
H	H	H	0	1	1	1
H	H	L	0	1	1	0
H	L	H	0	1	0	1
H	L	L	0	1	0	0
L	H	H	0	0	1	1
L	H	L	0	0	1	0
L	L	H	0	0	0	1 DEFAULT
L	L	L	0	0	0	0

H=High :Tied to 1.8V
M=Middle:Tied to 0.9V
L=Low :Tied to 0V

1:SMB_ALT_ADDR ENABLE
0:SMB_ALT_ADDR DISABLE

1:DEVID_SEL REBRAND
0:DEVID_SEL ORIGNAL

1:PCIE_CFG LOW POWER
0:PCIE_CFG HIGH POWER

1:VGA_DEVICE ENABLE
0:VGA_DEVICE DISABLE

GROUP0

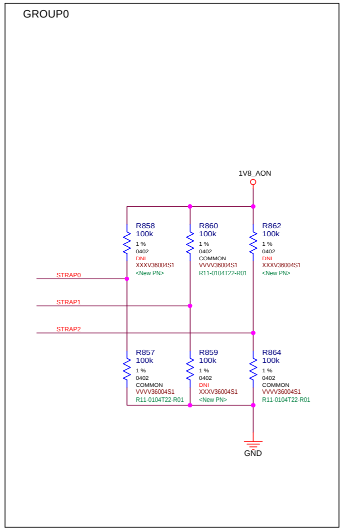
1V8_AON
R858
100k
1 %
0402
DNI
XXXV36004S1
<New PN>
R860
100k
1 %
0402
COMMON
VVVV36004S1
R11-0104T22-R01
R862
100k
1 %
0402
DNI
XXXV36004S1
<New PN>
STRAP0
STRAP1
STRAP2
R857
100k
1 %
0402
COMMON
VVVV36004S1
R11-0104T22-R01
R859
100k
1 %
0402
DNI
XXXV36004S1
<New PN>
R864
100k
1 %
0402
COMMON
VVVV36004S1
R11-0104T22-R01
GND

GROUP1

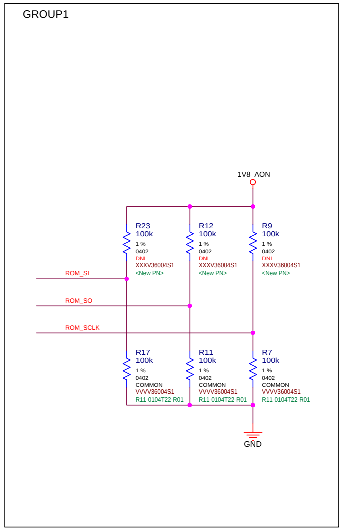
1V8_AON
R23
100k
1 %
0402
DNI
XXXV36004S1
<New PN>
R12
100k
1 %
0402
DNI
XXXV36004S1
<New PN>
R9
100k
1 %
0402
DNI
XXXV36004S1
<New PN>
ROM_SI
ROM_SO
ROM_SCLK
R17
100k
1 %
0402
COMMON
VVVV36004S1
R11-0104T22-R01
R11
100k
1 %
0402
COMMON
VVVV36004S1
R11-0104T22-R01
R7
100k
1 %
0402
COMMON
VVVV36004S1
R11-0104T22-R01
GND

GROUP2

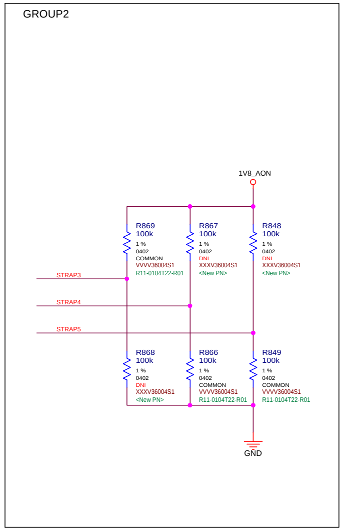
1V8_AON
R869
100k
1 %
0402
COMMON
VVVV36004S1
R11-0104T22-R01
R867
100k
1 %
0402
DNI
XXXV36004S1
<New PN>
R848
100k
1 %
0402
DNI
XXXV36004S1
<New PN>
STRAP3
STRAP4
STRAP5
R868
100k
1 %
0402
DNI
XXXV36004S1
<New PN>
R866
100k
1 %
0402
COMMON
VVVV36004S1
R11-0104T22-R01
R849
100k
1 %
0402
COMMON
VVVV36004S1
R11-0104T22-R01
GND

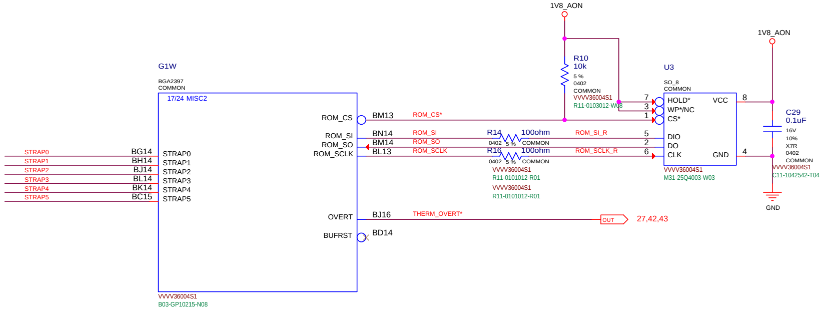
G1W
BGA2397
COMMON
17/24 MISC2
STRAP0
STRAP1
STRAP2
STRAP3
STRAP4
STRAP5
BG14
BH14
BJ14
BL14
BK14
BC15
ROM_CS
ROM_SI
ROM_SO
ROM_SCLK
BM13
BN14
BM14
BL13
ROM_CS*
ROM_SI
ROM_SO
ROM_SCLK
OVERT
BJ16
THERM_OVERT*
OUT
27,42,43
BUFRST
BD14
VVVV36004S1
B03-GP10215-N08
1V8_AON
R10
10k
5 %
0402
COMMON
VVVV36004S1
R11-0103012-W08
R14
100ohm
0402
5 %
COMMON
R16
100ohm
0402
5 %
COMMON
VVVV36004S1
R11-0101012-R01
VVVV36004S1
R11-0101012-R01
ROM_SI_R
ROM_SCLK_R
U3
SO_8
COMMON
7
3
1
5
2
6
HOLD*
WP*/NC
CS*
DIO
DO
CLK
VCC
GND
8
4
VVVV36004S1
M31-25Q4003-W03
1V8_AON
C29
0.1uF
16V
10%
X7R
0402
COMMON
VVVV36004S1
C11-1042542-T04
GND

MICRO-STAR INT'L CO.,LTD
MS-V360

Size	Document Description	Rev
Custom	MISC2: ROM, Straps	2.0

Date: Friday, March 03, 2017 Sheet 28 of 50

Page29: MISC2: XTAL. PLL

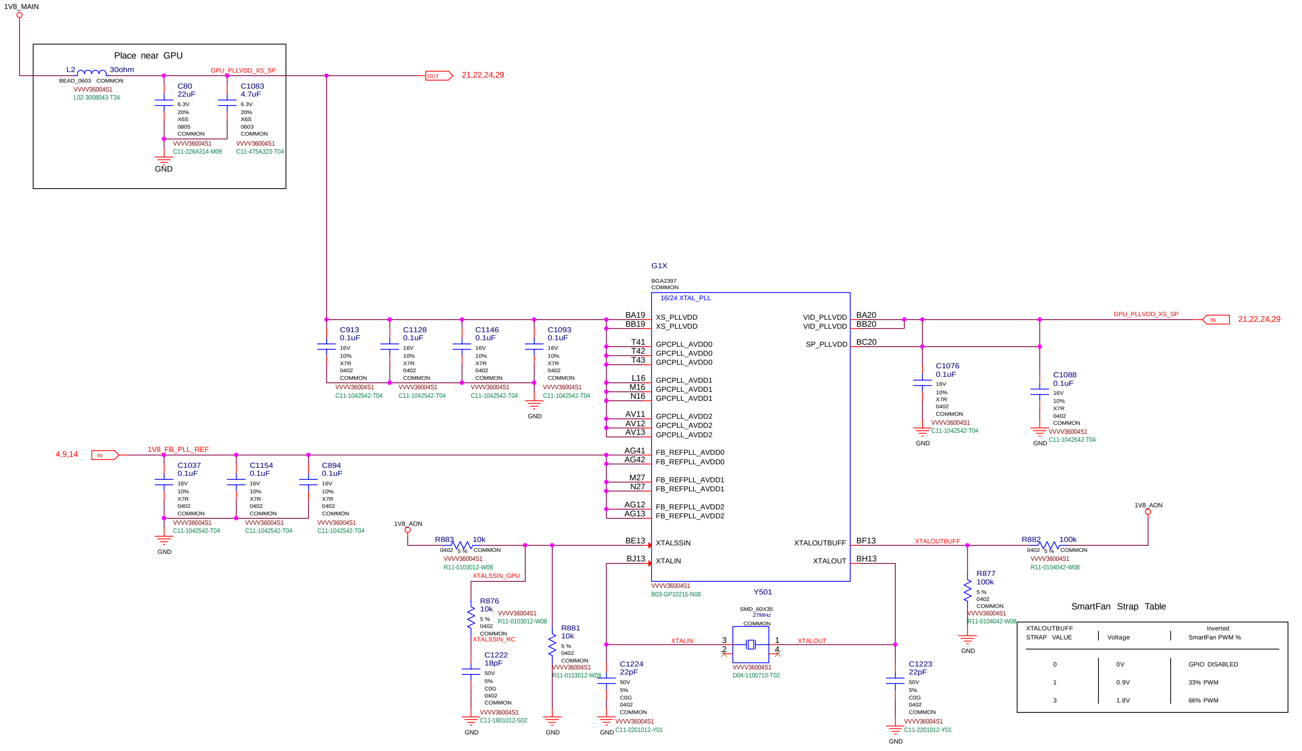
1V8_MAIN
Place near GPU
L2
30ohm
BEAD_0603 COMMON
VVVV36004S1
L02-3008043-T34
GPU_PLLVDD_XS_SP
C80
22uF
6.3V
20%
X6S
0805
COMMON
VVVV36004S1
C11-226A314-M09
C1083
4.7uF
6.3V
20%
X6S
0603
COMMON
VVVV36004S1
C11-475A323-T04
GND
OUT
21,22,24,29
G1X
BGA2397
COMMON
16/24 XTAL_PLL
C913 0.1uF 16V 10% X7R 0402 COMMON VVVV36004S1 C11-1042542-T04
C1128 0.1uF 16V 10% X7R 0402 COMMON VVVV36004S1 C11-1042542-T04
C1146 0.1uF 16V 10% X7R 0402 COMMON VVVV36004S1 C11-1042542-T04
C1093 0.1uF 16V 10% X7R 0402 COMMON VVVV36004S1 C11-1042542-T04
GND
BA19 XS_PLLVDD
BB19 XS_PLLVDD
T41 GPCPLL_AVDD0
T42 GPCPLL_AVDD0
T43 GPCPLL_AVDD0
L16 GPCPLL_AVDD1
M16 GPCPLL_AVDD1
N16 GPCPLL_AVDD1
AV11 GPCPLL_AVDD2
AV12 GPCPLL_AVDD2
AV13 GPCPLL_AVDD2
AG41 FB_REFPLL_AVDD0
AG42 FB_REFPLL_AVDD0
M27 FB_REFPLL_AVDD1
N27 FB_REFPLL_AVDD1
AG12 FB_REFPLL_AVDD2
AG13 FB_REFPLL_AVDD2
BE13 XTALSSIN
BJ13 XTALIN
VID_PLLVDD BA20
VID_PLLVDD BB20
SP_PLLVDD BC20
XTALOUTBUFF BF13
XTALOUT BH13
VVVV36004S1
B03-GP10215-N08
GPU_PLLVDD_XS_SP
IN
21,22,24,29
C1076 0.1uF 16V 10% X7R 0402 COMMON VVVV36004S1 C11-1042542-T04
GND
C1088 0.1uF 16V 10% X7R 0402 COMMON VVVV36004S1 C11-1042542-T04
GND
4,9,14
IN
1V8_FB_PLL_REF
C1037 0.1uF 16V 10% X7R 0402 COMMON VVVV36004S1 C11-1042542-T04
C1154 0.1uF 16V 10% X7R 0402 COMMON VVVV36004S1 C11-1042542-T04
C894 0.1uF 16V 10% X7R 0402 COMMON VVVV36004S1 C11-1042542-T04
GND
1V8_AON
R883 10k 0402 5 % COMMON VVVV36004S1 R11-0103012-W08
XTALSSIN_GPU
R876 10k 5 % 0402 COMMON VVVV36004S1 R11-0103012-W08
XTALSSIN_RC
C1222 18pF 50V 5% C0G 0402 COMMON VVVV36004S1 C11-1801012-S02
GND
R881 10k 5 % 0402 COMMON VVVV36004S1 R11-0103012-W08
GND
C1224 22pF 50V 5% C0G 0402 COMMON VVVV36004S1 C11-2201012-Y01
GND
Y501
SMD_60X35
27MHz
COMMON
XTALIN
3
2
1
4
XTALOUT
VVVV36004S1
D04-1100710-T02
C1223 22pF 50V 5% C0G 0402 COMMON VVVV36004S1 C11-2201012-Y01
GND
XTALOUTBUFF
R882 100k 0402 5 % COMMON VVVV36004S1 R11-0104042-W08
1V8_AON
R877 100k 5 % 0402 COMMON VVVV36004S1 R11-0104042-W08
GND

SmartFan Strap Table

XTALOUTBUFF STRAP VALUE	Voltage	Inverted SmartFan PWM %
0	0V	GPIO DISABLED
1	0.9V	33% PWM
3	1.8V	66% PWM

MICRO-STAR INT'L CO.,LTD

MS-V360

Size	Document Description	Rev
Custom	MISC2: XTAL. PLL	2.0

Date: Friday, March 03, 2017 Sheet 29 of 50

Page30: PS: 5V, PEX_VDD

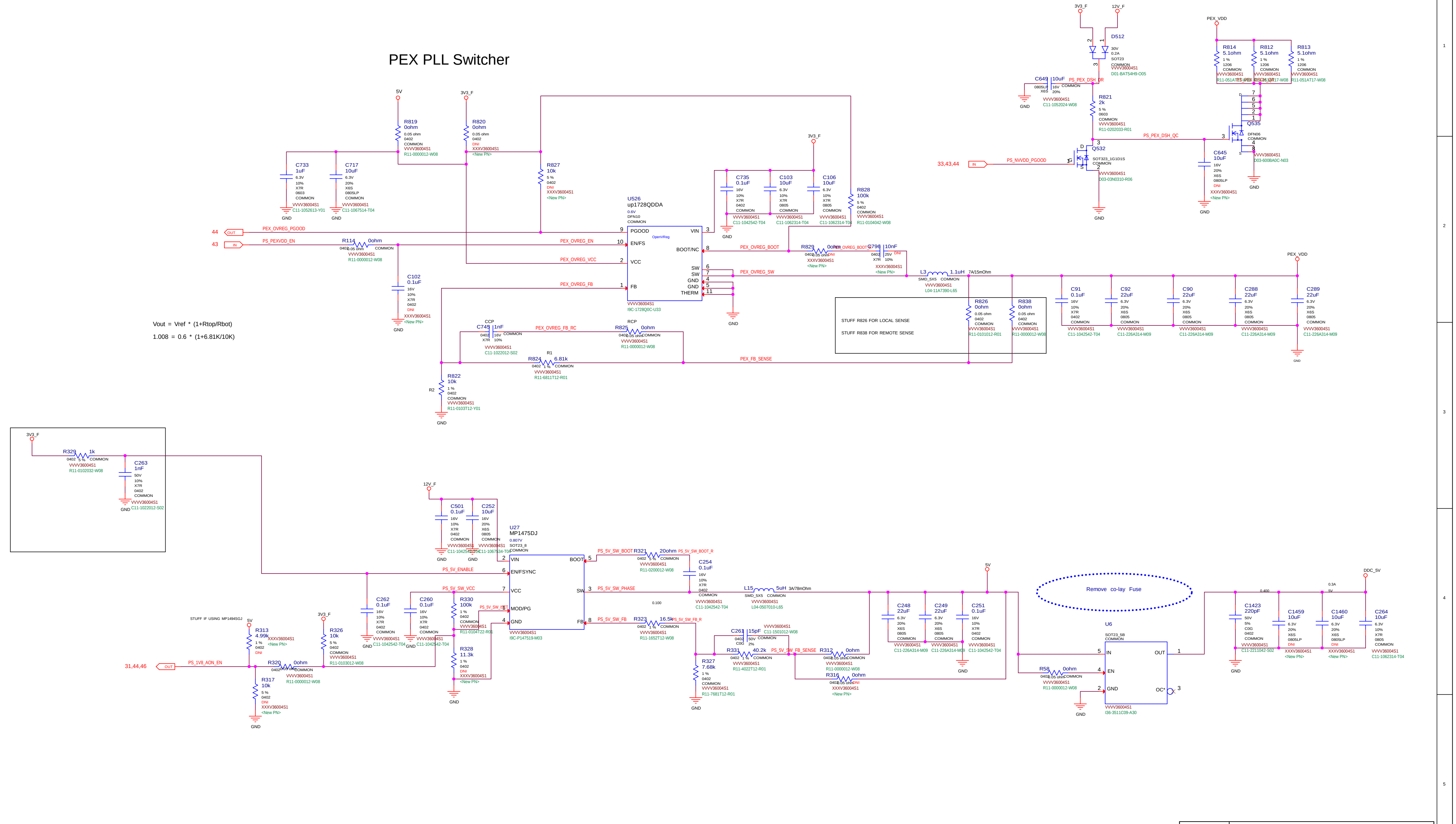
PEX PLL Switcher
5V
3V3_F
12V_F
PEX_VDD
R819 0ohm
R820 0ohm
R827 10k
R828 100k
C733 1uF
C717 10uF
C735 0.1uF
C103 10uF
C106 10uF
U526 up1728QDDA
PGOOD
EN/FS
VCC
FB
VIN
BOOT/NC
SW
GND
THERM
PEX_OVREG_PGOOD
PS_PEXVDD_EN
PEX_OVREG_EN
PEX_OVREG_VCC
PEX_OVREG_FB
PEX_OVREG_BOOT
PEX_OVREG_SW
PEX_OVREG_FB_RC
PEX_FB_SENSE
R114 0ohm
C102 0.1uF
R829 0ohm
C796 10nF
L3 1.1uH
7A/15mOhm
R826 0ohm
R838 0ohm
STUFF R826 FOR LOCAL SENSE
STUFF R838 FOR REMOTE SENSE
C91 0.1uF
C92 22uF
C90 22uF
C288 22uF
C289 22uF
C749 1nF
R825 0ohm
R824 6.81k
R822 10k
Vout = Vref * (1+Rtop/Rbot)
1.008 = 0.6 * (1+6.81K/10K)
D512
C649 10uF
R821 2k
PS_PEX_DSH_OR
PS_PEX_DSH_QC
Q532
Q535
C645 10uF
PS_NVVDD_PGOOD
33,43,44
R814 5.1ohm
R812 5.1ohm
R813 5.1ohm
R329 1k
C263 1nF
U27 MP1475DJ
VIN
EN/FSYNC
VCC
MOD/PG
GND
BOOT
SW
FB
C501 0.1uF
C252 10uF
PS_5V_ENABLE
PS_5V_SW_VCC
PS_5V_SW_BOOT
PS_5V_SW_PHASE
PS_5V_SW_FB
PS_5V_SW_FB_SENSE
R321 20ohm
C254 0.1uF
L15 5uH
3A/78mOhm
C262 0.1uF
C260 0.1uF
R330 100k
R328 11.3k
R323 16.5k
R327 7.68k
C261 15pF
R331 40.2k
R312 0ohm
R316 0ohm
C248 22uF
C249 22uF
C251 0.1uF
STUFF IF USING MP1494SGJ
R313 4.99k
R326 10k
R320 0ohm
R317 10k
PS_1V8_AON_EN
31,44,46
Remove co-lay Fuse
U6
IN
EN
GND
OUT
OC*
R58 0ohm
DDC_5V
C1423 220pF
C1459 10uF
C1460 10uF
C264 10uF
GND
A B C D E F G H
1 2 3 4 5

MICRO-STAR INT'L CO.,LTD

MS-V360

Size: Custom

Document Description: PS: 5V, PEX_VDD

Rev 2.0

Date: Friday, March 03, 2017

Sheet 30 of 50

Page31: PS: 1V8 Rails

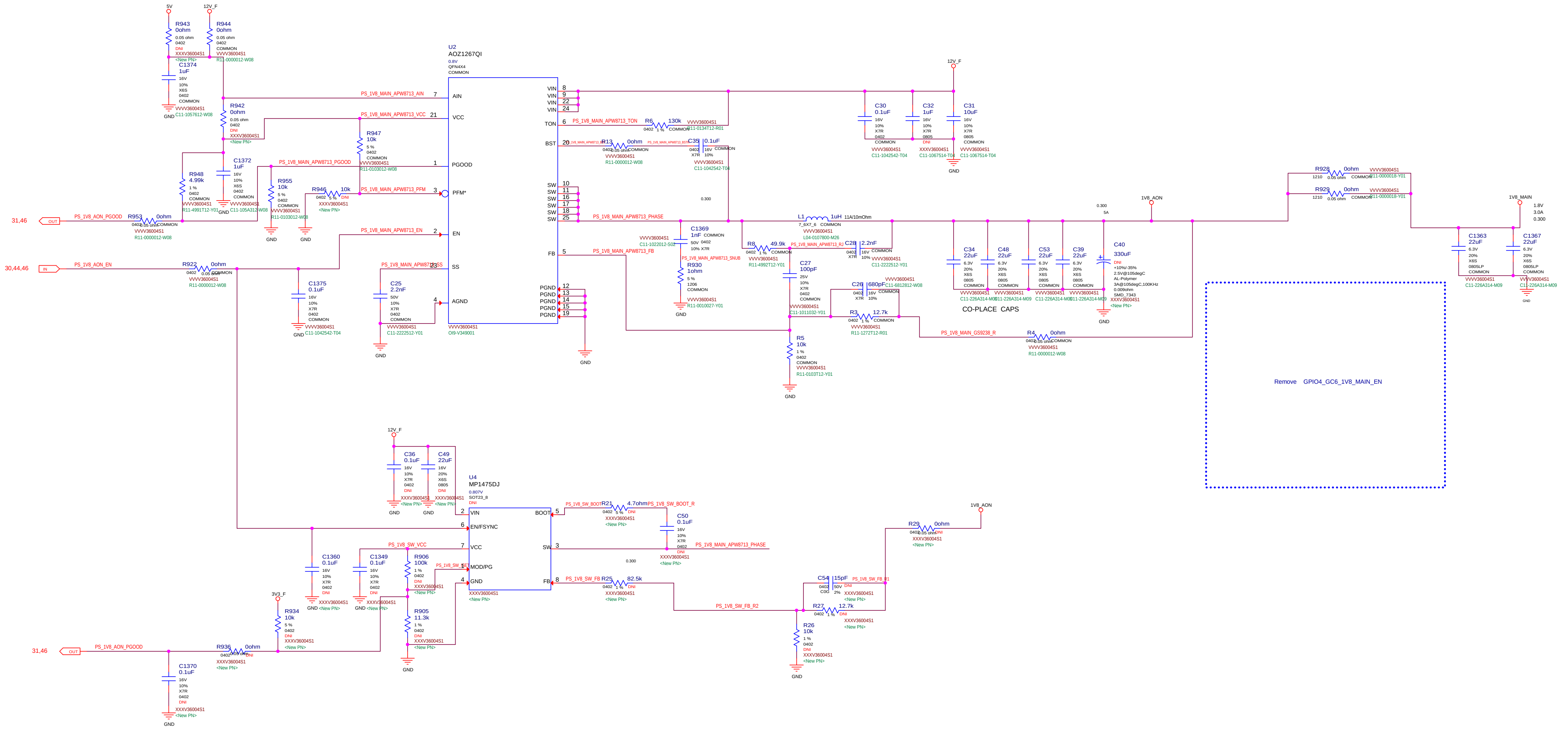
U2
AOZ1267QI
0.8V
QFN4X4
COMMON
AIN
VCC
PGOOD
PFM*
EN
SS
AGND
VIN
TON
BST
SW
FB
PGND
VVVV36004S1
OI9-V349001
PS_1V8_MAIN_APW8713_AIN
PS_1V8_MAIN_APW8713_VCC
PS_1V8_MAIN_APW8713_PGOOD
PS_1V8_MAIN_APW8713_PFM
PS_1V8_MAIN_APW8713_EN
PS_1V8_MAIN_APW8713_SS
PS_1V8_MAIN_APW8713_TON
PS_1V8_MAIN_APW8713_PHASE
PS_1V8_MAIN_APW8713_FB
PS_1V8_MAIN_APW8713_SNUB
PS_1V8_MAIN_GS9238_R
PS_1V8_AON_PGOOD
PS_1V8_AON_EN
5V
12V_F
3V3_F
1V8_AON
1V8_MAIN
GND
31,46
30,44,46
OUT
IN
R943 0ohm
R944 0ohm
C1374 1uF
R942 0ohm
R948 4.99k
C1372 1uF
R955 10k
R946 10k
R947 10k
R953 0ohm
R922 0ohm
C1375 0.1uF
C25 2.2nF
R6 130k
R13 0ohm
C35 0.1uF
C30 0.1uF
C32 1uF
C31 10uF
L1 1uH 11A/10mOhm
C1369 1nF
R930 1ohm
R8 49.9k
C28 2.2nF
C27 100pF
C26 680pF
R3 12.7k
R5 10k
R4 0ohm
C34 22uF
C48 22uF
C53 22uF
C39 22uF
C40 330uF
CO-PLACE CAPS
R928 0ohm
R929 0ohm
C1363 22uF
C1367 22uF
1.8V
3.0A
0.300
5A
Remove GPIO4_GC6_1V8_MAIN_EN
U4
MP1475DJ
0.807V
SOT23_8
DNI
VIN
EN/FSYNC
VCC
MOD/PG
GND
BOOT
SW
FB
C36 0.1uF
C49 22uF
C1360 0.1uF
C1349 0.1uF
R906 100k
R905 11.3k
R934 10k
R936 0ohm
C1370 0.1uF
R21 4.7ohm
C50 0.1uF
R25 82.5k
R29 0ohm
C54 15pF
R27 12.7k
R26 10k
PS_1V8_SW_BOOT
PS_1V8_SW_BOOT_R
PS_1V8_SW_VCC
PS_1V8_SW_FB
PS_1V8_SW_FB_R1
PS_1V8_SW_FB_R2
<New PN>

1.8 = 0.8 * (1+18.7K/15K)

Vout = Vref * (1+Rtop/Rbot)

MICRO-STAR INT'L CO.,LTD

MS-V360

Size	Document Description	Rev
Custom	PS: 1V8 Rails	2.0

Date: Friday, March 03, 2017 Sheet 31 of 50

Page32: PS: FBVDDQ

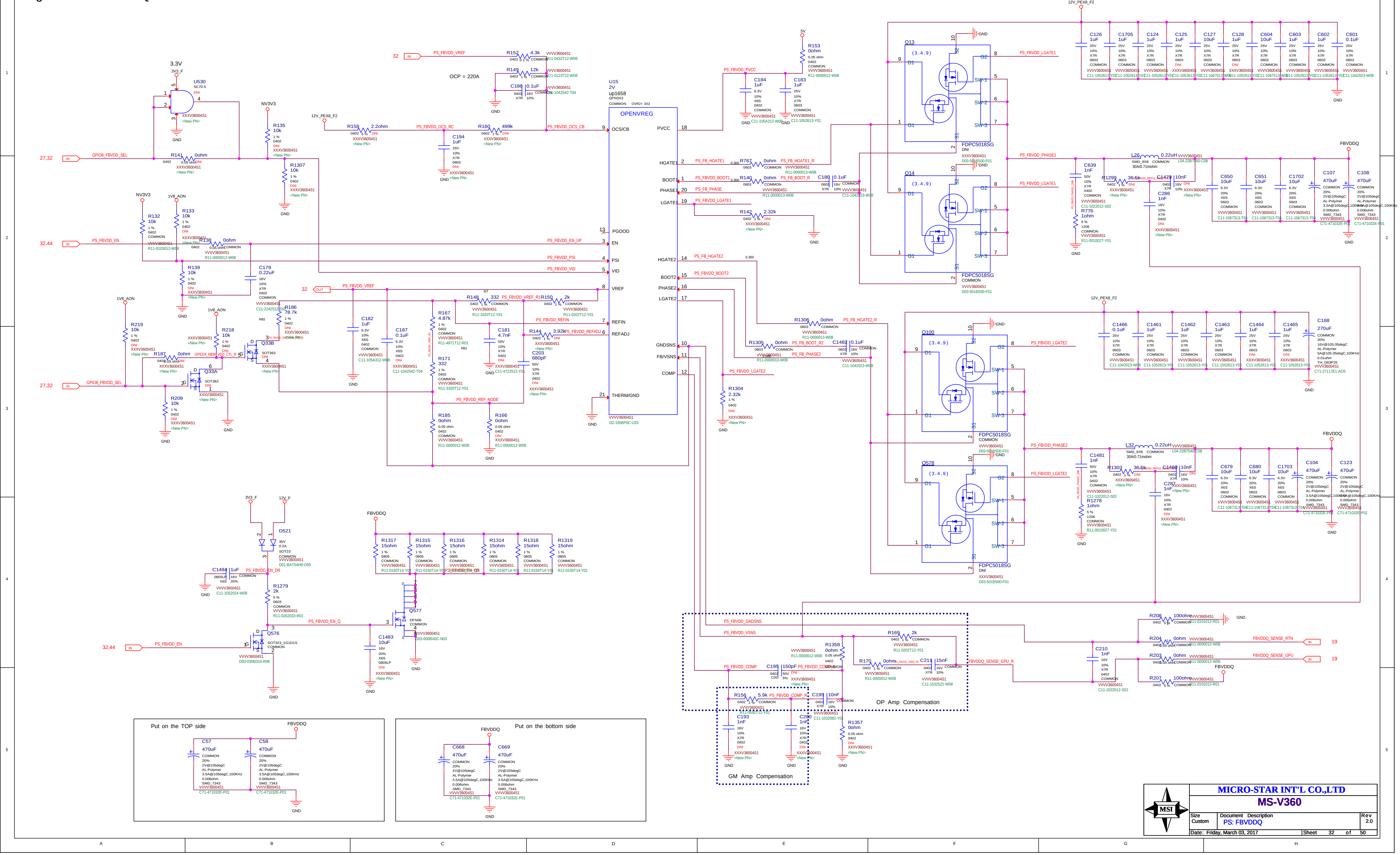

3.3V
3V3_F
U530
SC70-5
NV3V3
12V_PEX8_F2
GPIO8_FBVDD_SEL
PS_FBVDD_EN
27,32
32,44
32
PS_FBVDD_VREF
OCP = 220A
PS_FBVDD_OCS_RC
PS_FBVDD_OCS_CB
PS_FBVDD_PVCC
U15
2V
up1658
QFN3X3
OPENVREG
OCS/CB
PVCC
HGATE1
BOOT1
PHASE1
LGATE1
PGOOD
EN
PSI
VID
VREF
REFIN
REFADJ
HGATE2
BOOT2
PHASE2
LGATE2
GNDSNS
FB/VSNS
COMP
THERM/GND
PS_FBVDD_EN_UP
PS_FBVDD_PSI
PS_FBVDD_VID
PS_FBVDD_REFIN
PS_FBVDD_REFADJ
PS_FBVDD_REF_NODE
Q13
Q14
Q100
Q578
(3.4.9)
D1
G1
G2
SW-1
SW-2
SW-3
S1
FDPC5018SG
PS_FBVDD_LGATE1
PS_FBVDD_PHASE1
PS_FBVDD_LGATE2
PS_FBVDD_PHASE2
L26
0.22uH
SMD_9X8
30A/0.71mohm
L32
FBVDDQ
GND
Q33A
Q33B
Q576
Q577
D521
1V8_AON
3V3_F
12V_F
PS_FBVDD_EN_DR
PS_FBVDD_EN_Q
PS_FBVDD_GNDSNS
PS_FBVDD_VSNS
PS_FBVDD_COMP
FBVDDQ_SENSE_RTN
FBVDDQ_SENSE_GPU
FBVDDQ_SENSE_GPU_R
19
OP Amp Compensation
GM Amp Compensation
Put on the TOP side
Put on the bottom side
C57
C58
C668
C669
470uF
R1317
R1315
R1316
R1314
R1318
R1319
15ohm

MICRO-STAR INT'L CO.,LTD		
MS-V360		
Size Custom	Document Description PS: FBVDDQ	Rev 2.0
Date: Friday, March 03, 2017	Sheet 32 of 50	

Page33: PS: NVVDD Controller_OVR8

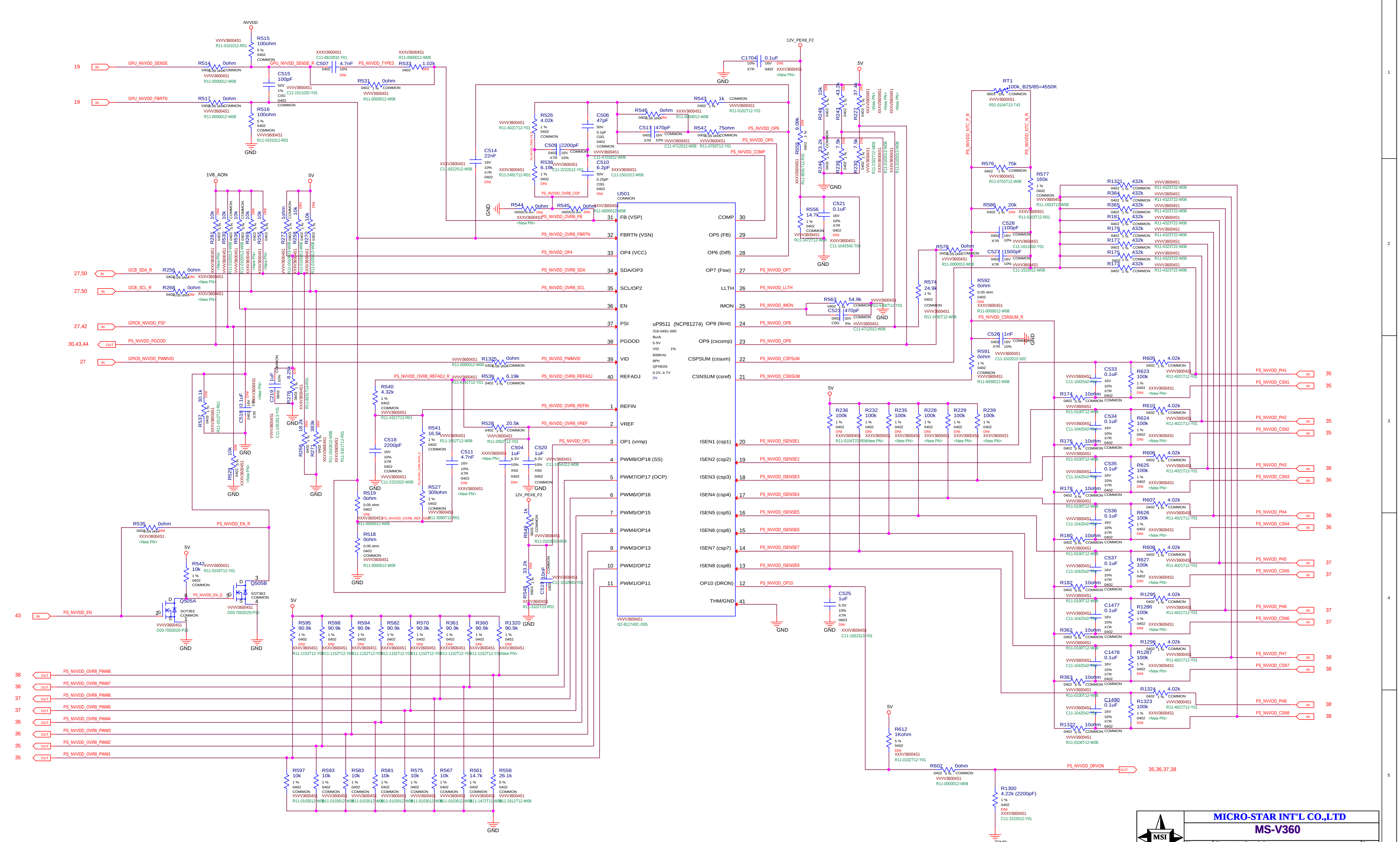
NVVDD
R515 100ohm
GPU_NVVDD_SENSE
GPU_NVVDD_FBRTN
R514 0ohm
R517 0ohm
R516 100ohm
C515 100pF
C507 4.7nF
R533 1.02k
R531 0ohm
GPU_NVVDD_SENSE_R
PS_NVVDD_TYPE3
12V_PEX8_F2
C1704 0.1uF
5V
1V8_AON
R526 4.02k
C506 47pF
C509 2200pF
C510 6.2pF
R538 6.19k
C514 22nF
R546 0ohm
R543 1k
C513 470pF
R547 75ohm
PS_NVVDD_OP6
PS_NVVDD_OP5
PS_NVVDD_COMP
R544 0ohm
R545 0ohm
PS_NVVDD_OVR8_FB
PS_NVVDD_OVR8_COP
U501
uP9511 (NCP81274)
316-0461-000
Buck 5.5V VID 1% 600KHz 8Ph QFN5X5 0.2V..4.7V 2V
31 FB (VSP)
32 FBRTN (VSN)
33 OP4 (VCC)
34 SDA/OP3
35 SCL/OP2
36 EN
37 PSI
38 PGOOD
39 VID
40 REFADJ
1 REFIN
2 VREF
3 OP1 (vrmp)
4 PWM8/OP18 (SS)
5 PWM7/OP17 (OCP)
6 PWM6/OP16
7 PWM5/OP15
8 PWM4/OP14
9 PWM3/OP13
10 PWM2/OP12
11 PWM1/OP11
COMP 30
OP5 (FB) 29
OP6 (Diff) 28
OP7 (Fsw) 27
LLTH 26
IMON 25
OP8 (Ilimt) 24
OP9 (cscomp) 23
CSPSUM (cssum) 22
CSNSUM (csref) 21
ISEN1 (csp1) 20
ISEN2 (csp2) 19
ISEN3 (csp3) 18
ISEN4 (csp4) 17
ISEN5 (csp5) 16
ISEN6 (csp6) 15
ISEN7 (csp7) 14
ISEN8 (csp8) 13
OP10 (DRON) 12
THM/GND 41
VVVV36004S1 I32-812740C-O05
I2CB_SDA_R
I2CB_SCL_R
GPIO6_NVVDD_PSI*
PS_NVVDD_PGOOD
GPIO0_NVVDD_PWMVID
27,50
27,50
27,42
30,43,44
27
R256 0ohm
R268 0ohm
PS_NVVDD_OVR8_FBRTN
PS_NVVDD_OP4
PS_NVVDD_OVR8_SDA
PS_NVVDD_OVR8_SCL
PS_NVVDD_OP7
PS_NVVDD_LLTH
PS_NVVDD_IMON
PS_NVVDD_OP8
PS_NVVDD_OP9
PS_NVVDD_CSPSUM
PS_NVVDD_CSNSUM
R1325 0ohm
PS_NVVDD_PWMVID
R539 6.19k
PS_NVVDD_REFADJ
PS_NVVDD_OVR8_REFADJ_R
R540 4.32k
C518 2200pF
R541 16.5k
C511 4.7nF
R527 309ohm
R519 0ohm
R518 0ohm
R528 20.5k
C504 1uF
C520 1uF
PS_NVVDD_OVR8_REFIN
PS_NVVDD_OVR8_VREF
PS_NVVDD_OP1
PS_NVVDD_OVR8_REF
R549 1k
R548 33.2k
C519 10nF
R535 0ohm
PS_NVVDD_EN_R
R542 10k
Q505A
Q505B
SOT363
PS_NVVDD_EN_Q
PS_NVVDD_EN
43
R595 90.9k
R598 90.9k
R594 90.9k
R582 90.9k
R570 90.9k
R361 90.9k
R360 90.9k
R1320 90.9k
R597 10k
R593 10k
R583 10k
R581 10k
R575 10k
R567 10k
R561 14.7k
R558 26.1k
PS_NVVDD_OVR8_PWM8
PS_NVVDD_OVR8_PWM7
PS_NVVDD_OVR8_PWM6
PS_NVVDD_OVR8_PWM5
PS_NVVDD_OVR8_PWM4
PS_NVVDD_OVR8_PWM3
PS_NVVDD_OVR8_PWM2
PS_NVVDD_OVR8_PWM1
38
38
37
37
36
36
35
35
R556 14.7k
C521 0.1uF
R563 54.9k
C523 470pF
C525 1uF
R555 9.09k
R249 10k
R247 43.2k
R222 37.4k
R248 23.2k
R239 7.5k
R235 7.5k
PS_NVVDD_ISENSE1
PS_NVVDD_ISENSE2
PS_NVVDD_ISENSE3
PS_NVVDD_ISENSE4
PS_NVVDD_ISENSE5
PS_NVVDD_ISENSE6
PS_NVVDD_ISENSE7
PS_NVVDD_ISENSE8
PS_NVVDD_OP10
R236 100k
R232 100k
R235 100k
R228 100k
R229 100k
R239 100k
RT1 100k_B25/85=4550K
PS_NVVDD_NTC_P_R
PS_NVVDD_NTC_N_R
R576 75k
R577 165k
R586 20k
C528 100pF
R578 0ohm
C527 1500pF
R574 24.9k
R592 0ohm
PS_NVVDD_CSNSUM_R
C526 1nF
R591 0ohm
R1321 432k
R364 432k
R365 432k
R181 432k
R179 432k
R177 432k
R175 432k
R173 432k
R605 4.02k
R623 100k
C533 0.1uF
R174 10ohm
R610 4.02k
R624 100k
C534 0.1uF
R176 10ohm
R606 4.02k
R625 100k
C535 0.1uF
R178 10ohm
R607 4.02k
R626 100k
C536 0.1uF
R180 10ohm
R608 4.02k
R627 100k
C537 0.1uF
R182 10ohm
R1295 4.02k
R1286 100k
C1477 0.1uF
R362 10ohm
R1296 4.02k
R1287 100k
C1478 0.1uF
R363 10ohm
R1324 4.02k
R1323 100k
C1490 0.1uF
R1322 10ohm
PS_NVVDD_PH1
PS_NVVDD_CSN1
PS_NVVDD_PH2
PS_NVVDD_CSN2
PS_NVVDD_PH3
PS_NVVDD_CSN3
PS_NVVDD_PH4
PS_NVVDD_CSN4
PS_NVVDD_PH5
PS_NVVDD_CSN5
PS_NVVDD_PH6
PS_NVVDD_CSN6
PS_NVVDD_PH7
PS_NVVDD_CSN7
PS_NVVDD_PH8
PS_NVVDD_CSN8
R612 1Kohm
R602 0ohm
PS_NVVDD_DRVON
35,36,37,38
R1300 4.22k (2200pF)
GND

MICRO-STAR INT'L CO.,LTD

MS-V360

Size	Document Description	Rev
Custom	PS: NVVDD Controller_OVR8	2.0

Date: Friday, March 03, 2017 Sheet 33 of 50

Page34: PS: NVVDD CONTROLLER_PWR-MODULE

MICRO-STAR INT'L CO.,LTD

MS-V360

Size	Document Description	Rev
Custom	PS: NVVDD CONTROLLER_PWR-MODULE	2.0

Date: Friday, March 03, 2017
Sheet 34 of 50

Page35: PS: NVVDD Phase 1,2

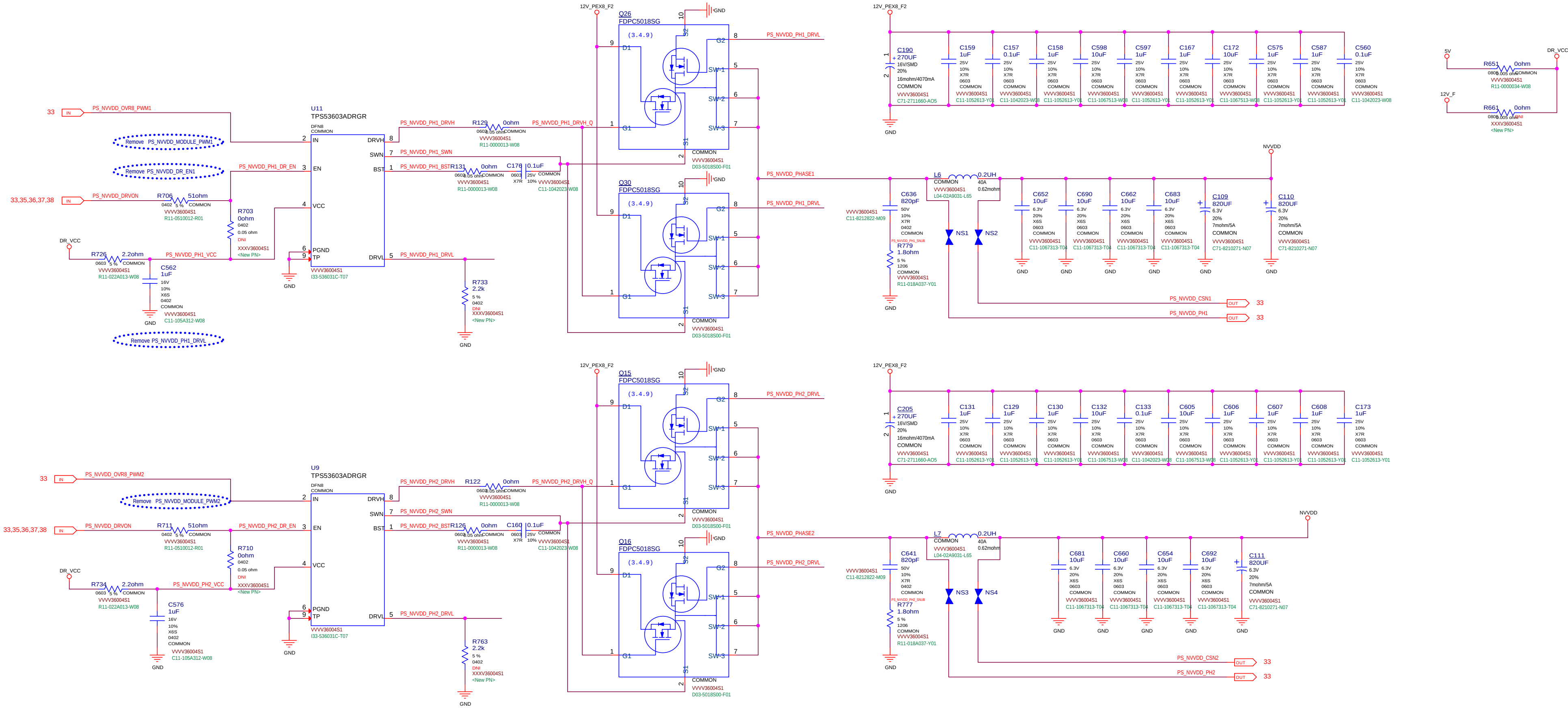

U11
TPS53603ADRGR
U9
TPS53603ADRGR
Q26
FDPC5018SG
Q30
FDPC5018SG
Q15
FDPC5018SG
Q16
FDPC5018SG
12V_PEX8_F2
PS_NVVDD_OVR8_PWM1
PS_NVVDD_OVR8_PWM2
PS_NVVDD_DRVON
PS_NVVDD_PH1_DR_EN
PS_NVVDD_PH2_DR_EN
PS_NVVDD_PH1_VCC
PS_NVVDD_PH2_VCC
PS_NVVDD_PH1_DRVH
PS_NVVDD_PH2_DRVH
PS_NVVDD_PH1_DRVH_Q
PS_NVVDD_PH2_DRVH_Q
PS_NVVDD_PH1_SWN
PS_NVVDD_PH2_SWN
PS_NVVDD_PH1_BST
PS_NVVDD_PH2_BST
PS_NVVDD_PH1_DRVL
PS_NVVDD_PH2_DRVL
PS_NVVDD_PHASE1
PS_NVVDD_PHASE2
PS_NVVDD_CSN1
PS_NVVDD_CSN2
PS_NVVDD_PH1
PS_NVVDD_PH2
Remove PS_NVVDD_MODULE_PWM1
Remove PS_NVVDD_DR_EN1
Remove PS_NVVDD_PH1_DRVL
Remove PS_NVVDD_MODULE_PWM2
L6 0.2UH 40A 0.62mohm
L7 0.2UH 40A 0.62mohm
NVVDD
DR_VCC
5V
12V_F
R651 0ohm
R661 0ohm
R129 0ohm
R131 0ohm
R122 0ohm
R126 0ohm
R706 51ohm
R711 51ohm
R703 0ohm
R710 0ohm
R726 2.2ohm
R734 2.2ohm
R733 2.2k
R763 2.2k
R779 1.8ohm
R777 1.8ohm
C562 1uF
C576 1uF
C176 0.1uF
C160 0.1uF
C636 820pF
C641 820pF
C190 270UF
C205 270UF
C109 820UF
C110 820UF
C111 820UF
NS1
NS2
NS3
NS4
GND
33
33,35,36,37,38

MICRO-STAR INT'L CO.,LTD

MS-V360

Size	Document Description	Rev
Custom	PS: NVVDD Phase 1,2	2.0

Date: Friday, March 03, 2017 Sheet 35 of 50

Page36: PS: NVVDD Phase 3,4

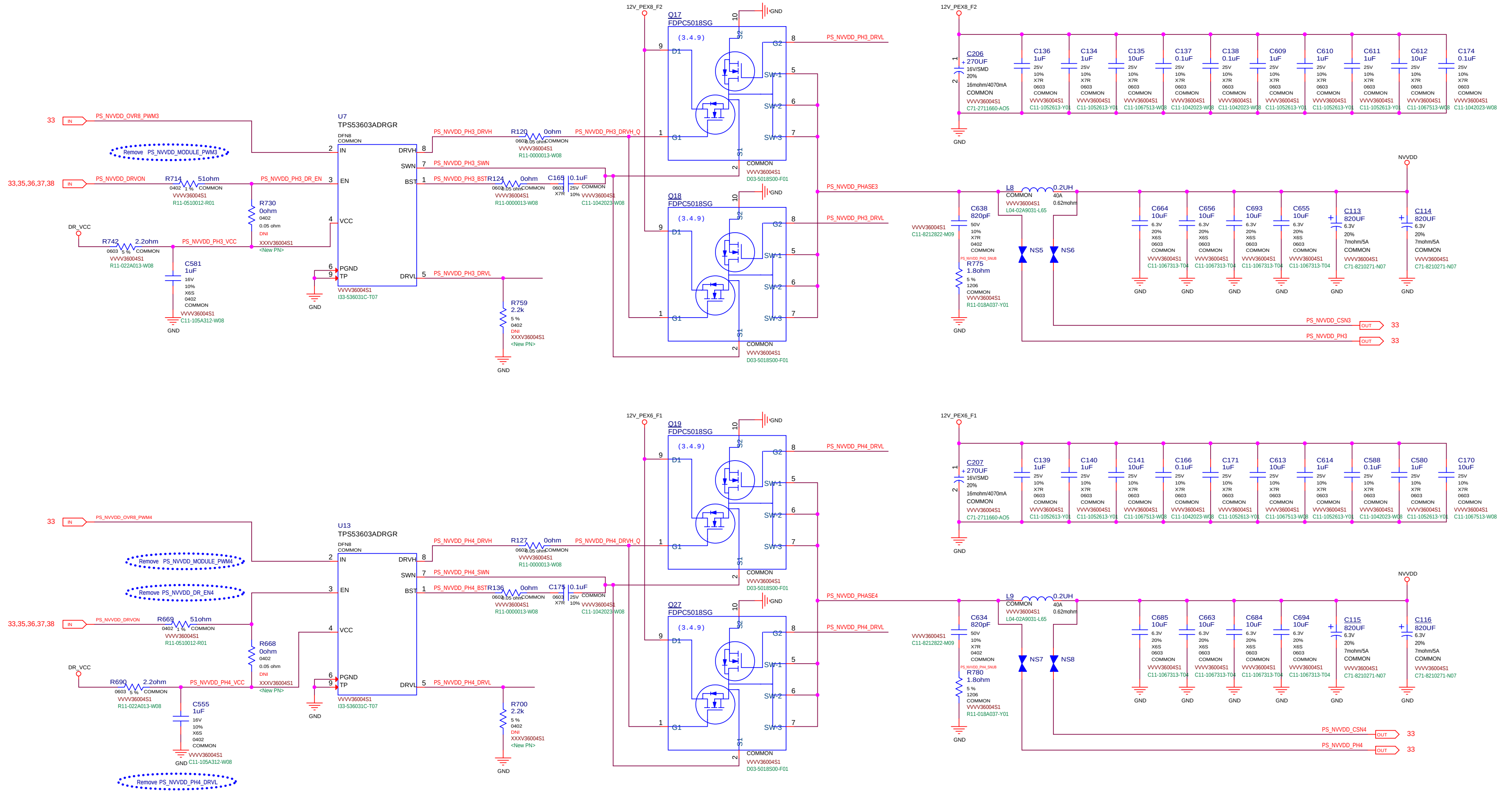

12V_PEX8_F2
Q17
FDPC5018SG
(3.4.9)
GND
PS_NVVDD_PH3_DRVL
33
PS_NVVDD_OVR8_PWM3
Remove PS_NVVDD_MODULE_PWM3
U7
TPS53603ADRGR
DFN8
COMMON
IN
EN
VCC
PGND
TP
DRVH
SWN
BST
DRVL
33,35,36,37,38
PS_NVVDD_DRVON
R714 51ohm
0402 1 % COMMON
VVVV36004S1
R11-0510012-R01
PS_NVVDD_PH3_DR_EN
R730 0ohm
0402
0.05 ohm
DNI
XXXV36004S1
<New PN>
DR_VCC
R742 2.2ohm
0603 5 % COMMON
VVVV36004S1
R11-022A013-W08
PS_NVVDD_PH3_VCC
C581 1uF
16V
10%
X6S
0402
COMMON
VVVV36004S1
C11-105A312-W08
VVVV36004S1
I33-536031C-T07
PS_NVVDD_PH3_DRVH
R120 0ohm
0603 0.05 ohm COMMON
VVVV36004S1
R11-0000013-W08
PS_NVVDD_PH3_DRVH_Q
PS_NVVDD_PH3_SWN
PS_NVVDD_PH3_BST
R124 0ohm
C169 0.1uF
0603 25V COMMON
X7R 10%
VVVV36004S1
C11-1042023-W08
PS_NVVDD_PH3_DRVL
R759 2.2k
5 %
0402
DNI
XXXV36004S1
<New PN>
COMMON
VVVV36004S1
D03-5018S00-F01
Q18
FDPC5018SG
PS_NVVDD_PHASE3
12V_PEX8_F2
C206 270UF
16V/SMD
20%
16mohm/4070mA
COMMON
VVVV36004S1
C71-2711660-AO5
C136 1uF
C134 1uF
C135 10uF
C137 0.1uF
C138 0.1uF
C609 1uF
C610 1uF
C611 1uF
C612 10uF
C174 0.1uF
25V
10%
X7R
0603
C11-1052613-Y01
C11-1067513-W08
C11-1042023-W08
L8 0.2UH
COMMON
VVVV36004S1
L04-02A9031-L65
40A
0.62mohm
NVVDD
C638 820pF
50V
10%
X7R
0402
COMMON
VVVV36004S1
C11-8212822-M09
R775 1.8ohm
5 %
1206
R11-018A037-Y01
PS_NVVDD_PH3_SNUB
NS5
NS6
C664 10uF
C656 10uF
C693 10uF
C655 10uF
6.3V
20%
X6S
C11-1067313-T04
C113 820UF
C114 820UF
6.3V
20%
7mohm/5A
C71-8210271-N07
PS_NVVDD_CSN3
PS_NVVDD_PH3
OUT
12V_PEX6_F1
Q19
FDPC5018SG
PS_NVVDD_PH4_DRVL
PS_NVVDD_OVR8_PWM4
Remove PS_NVVDD_MODULE_PWM4
Remove PS_NVVDD_DR_EN4
U13
TPS53603ADRGR
R669 51ohm
R668 0ohm
R690 2.2ohm
PS_NVVDD_PH4_VCC
C555 1uF
Remove PS_NVVDD_PH4_DRVL
PS_NVVDD_PH4_DRVH
R127 0ohm
PS_NVVDD_PH4_DRVH_Q
PS_NVVDD_PH4_SWN
PS_NVVDD_PH4_BST
R136 0ohm
C175 0.1uF
R700 2.2k
Q27
FDPC5018SG
PS_NVVDD_PHASE4
C207 270UF
C139 1uF
C140 1uF
C141 10uF
C166 0.1uF
C171 1uF
C613 10uF
C614 1uF
C588 0.1uF
C580 1uF
C170 10uF
L9 0.2UH
C634 820pF
R780 1.8ohm
PS_NVVDD_PH4_SNUB
NS7
NS8
C685 10uF
C663 10uF
C684 10uF
C694 10uF
C115 820UF
C116 820UF
PS_NVVDD_CSN4
PS_NVVDD_PH4

MICRO-STAR INT'L CO.,LTD

MS-V360

Size	Document Description	Rev
Custom	PS: NVVDD Phase 3,4	2.0

Date: Friday, March 03, 2017 Sheet 36 of 50

Page37: PS: NVVDD Phase 5,6

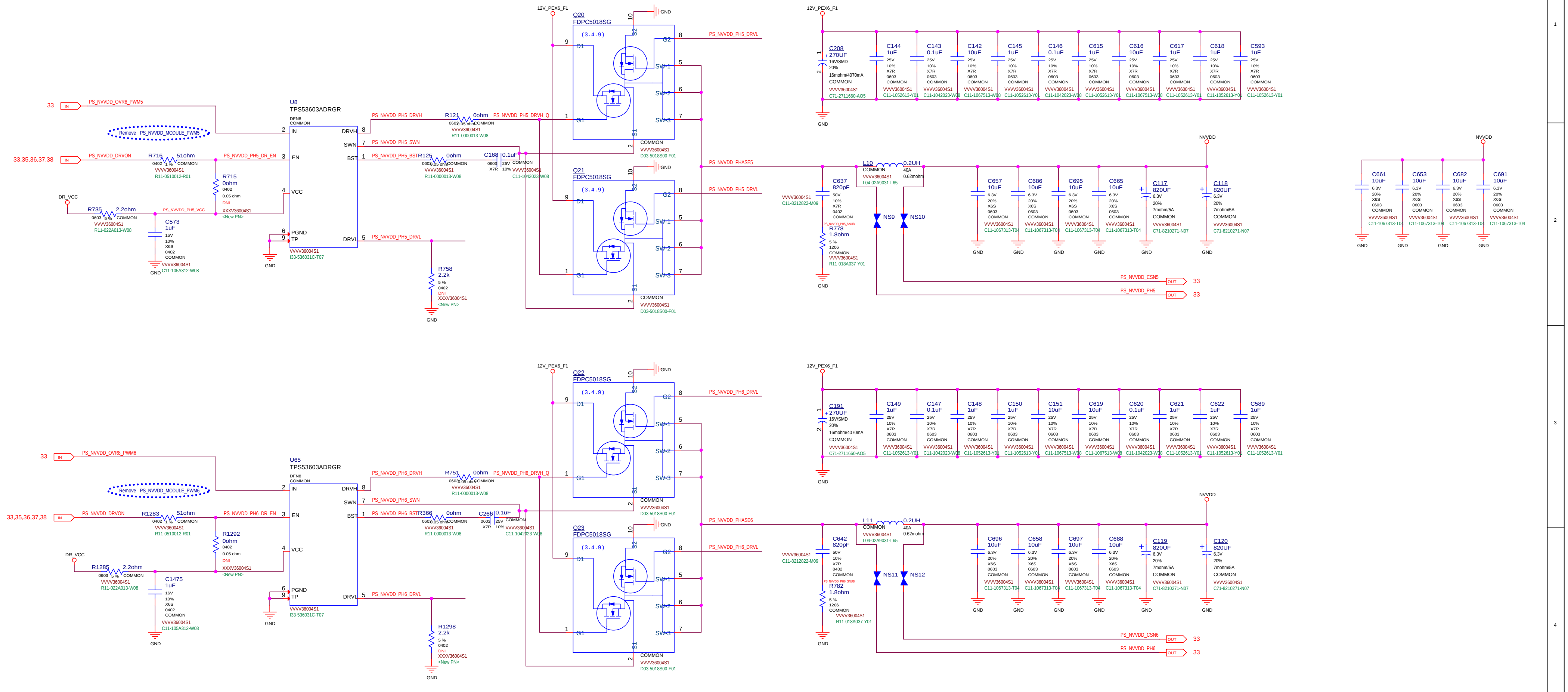

U8
TPS53603ADRGR
DFN8
COMMON
U65
TPS53603ADRGR
IN
EN
VCC
PGND
TP
DRVH
SWN
BST
DRVL
VVVV36004S1
I33-536031C-T07
PS_NVVDD_OVR8_PWM5
PS_NVVDD_OVR8_PWM6
Remove PS_NVVDD_MODULE_PWM5
Remove PS_NVVDD_MODULE_PWM6
PS_NVVDD_DRVON
33,35,36,37,38
33
DR_VCC
R716 51ohm
R1283 51ohm
R715 0ohm
R1292 0ohm
R735 2.2ohm
R1285 2.2ohm
C573 1uF
C1475 1uF
PS_NVVDD_PH5_DR_EN
PS_NVVDD_PH6_DR_EN
PS_NVVDD_PH5_VCC
PS_NVVDD_PH5_DRVH
PS_NVVDD_PH6_DRVH
PS_NVVDD_PH5_SWN
PS_NVVDD_PH6_SWN
PS_NVVDD_PH5_BST
PS_NVVDD_PH6_BST
PS_NVVDD_PH5_DRVL
PS_NVVDD_PH6_DRVL
PS_NVVDD_PH5_DRVH_Q
PS_NVVDD_PH6_DRVH_Q
R121 0ohm
R751 0ohm
R125 0ohm
R366 0ohm
C168 0.1uF
C269 0.1uF
R758 2.2k
R1298 2.2k
DNI
XXXV36004S1
<New PN>
12V_PEX6_F1
Q20 FDPC5018SG
Q21 FDPC5018SG
Q22 FDPC5018SG
Q23 FDPC5018SG
(3,4,9)
D1
G1
G2
S1
S2
SW-1
SW-2
SW-3
D03-5018S00-F01
PS_NVVDD_PH5_DRVL
PS_NVVDD_PH6_DRVL
PS_NVVDD_PHASE5
PS_NVVDD_PHASE6
GND
C208 270UF
C191 270UF
16V/SMD
20%
16mohm/4070mA
C71-2711660-A05
C144 1uF
C143 0.1uF
C142 10uF
C145 1uF
C146 0.1uF
C615 1uF
C616 10uF
C617 1uF
C618 1uF
C593 1uF
C149 1uF
C147 0.1uF
C148 10uF
C150 1uF
C151 10uF
C619 10uF
C620 0.1uF
C621 1uF
C622 1uF
C589 1uF
L10 0.2UH
L11 0.2UH
40A
0.62mohm
L04-02A9031-L65
C637 820pF
C642 820pF
R778 1.8ohm
R782 1.8ohm
NS9
NS10
NS11
NS12
C657 10uF
C686 10uF
C695 10uF
C665 10uF
C117 820UF
C118 820UF
C696 10uF
C658 10uF
C697 10uF
C688 10uF
C119 820UF
C120 820UF
7mohm/5A
C71-8210271-N07
NVVDD
C661 10uF
C653 10uF
C682 10uF
C691 10uF
C11-1067313-T04
PS_NVVDD_CSN5
PS_NVVDD_PH5
PS_NVVDD_CSN6
PS_NVVDD_PH6
OUT

MICRO-STAR INT'L CO.,LTD

MS-V360

Size	Document Description	Rev
Custom	PS: NVVDD Phase 5,6	2.0

Date: Friday, March 03, 2017 Sheet 37 of 50

Page41: PS:NVVDD Phase 7,8

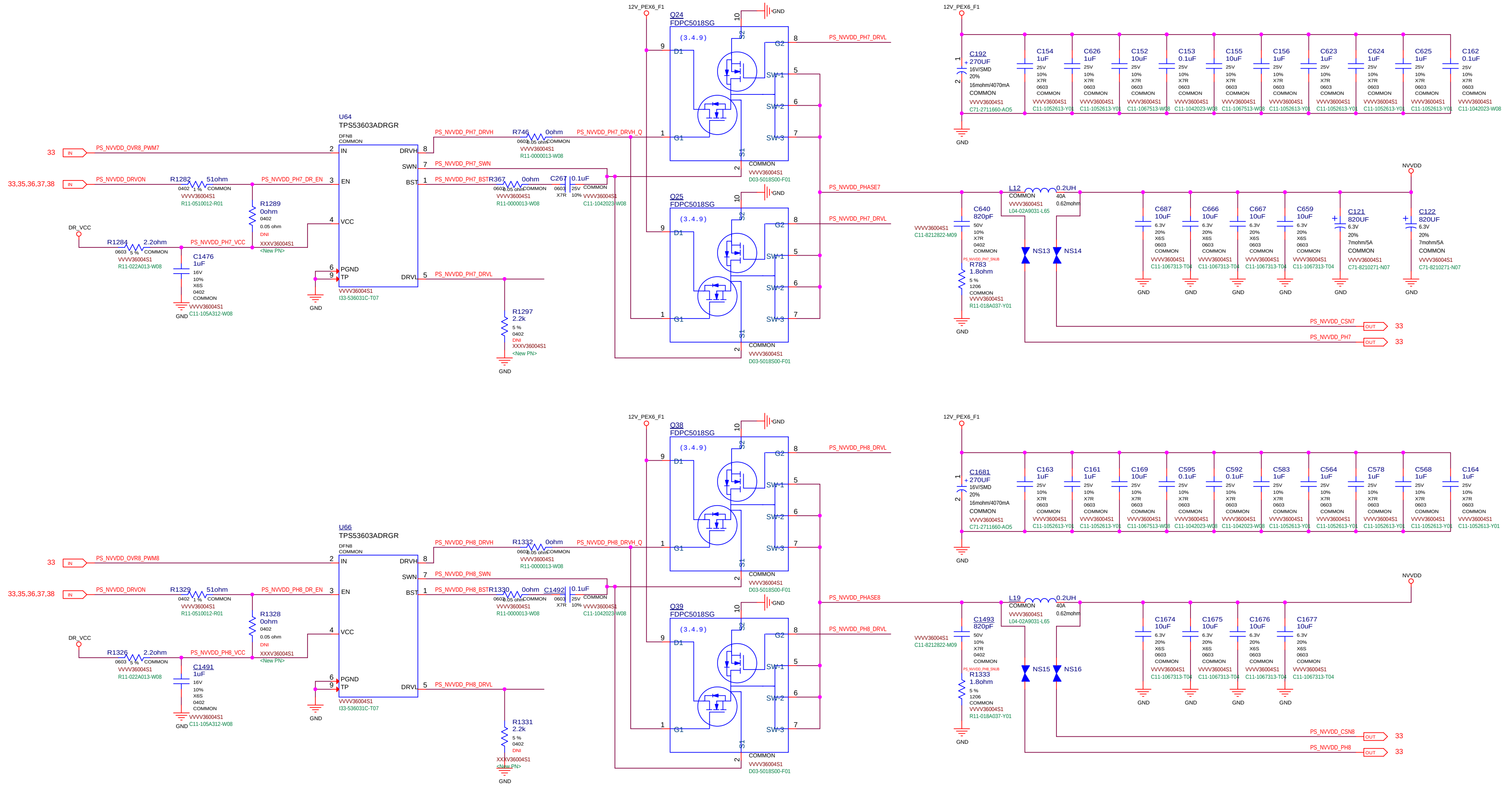

U64
TPS53603ADRGR
DFN8
COMMON
IN
EN
VCC
PGND
TP
DRVH
SWN
BST
DRVL
VVVV36004S1
I33-536031C-T07
33
PS_NVVDD_OVR8_PWM7
33,35,36,37,38
PS_NVVDD_DRVON
R1282 51ohm
R11-0510012-R01
PS_NVVDD_PH7_DR_EN
R1289 0ohm
DNI
XXXV36004S1
<New PN>
DR_VCC
R1284 2.2ohm
R11-022A013-W08
PS_NVVDD_PH7_VCC
C1476 1uF
C11-105A312-W08
GND
PS_NVVDD_PH7_DRVH
R746 0ohm
R11-0000013-W08
PS_NVVDD_PH7_DRVH_Q
PS_NVVDD_PH7_SWN
PS_NVVDD_PH7_BST
R367 0ohm
C267 0.1uF
C11-1042023-W08
PS_NVVDD_PH7_DRVL
R1297 2.2k
DNI
12V_PEX6_F1
Q24
FDPC5018SG
(3.4.9)
D1
G1
G2
S1
S2
SW-1
SW-2
SW-3
D03-5018S00-F01
PS_NVVDD_PH7_DRVL
Q25
FDPC5018SG
PS_NVVDD_PHASE7
C192 270UF
16V/SMD
16mohm/4070mA
C71-2711660-AO5
C154 1uF
C626 1uF
C152 10uF
C153 0.1uF
C155 10uF
C156 1uF
C623 1uF
C624 1uF
C625 1uF
C162 0.1uF
L12 0.2UH
40A
0.62mohm
L04-02A9031-L65
C640 820pF
C11-8212822-M09
R783 1.8ohm
R11-018A037-Y01
NS13
NS14
NVVDD
C687 10uF
C666 10uF
C667 10uF
C659 10uF
C11-1067313-T04
C121 820UF
C122 820UF
7mohm/5A
C71-8210271-N07
PS_NVVDD_CSN7
PS_NVVDD_PH7
OUT
U66
TPS53603ADRGR
PS_NVVDD_OVR8_PWM8
R1329 51ohm
PS_NVVDD_PH8_DR_EN
R1328 0ohm
R1326 2.2ohm
PS_NVVDD_PH8_VCC
C1491 1uF
PS_NVVDD_PH8_DRVH
R1332 0ohm
PS_NVVDD_PH8_DRVH_Q
PS_NVVDD_PH8_SWN
PS_NVVDD_PH8_BST
R1330 0ohm
C1492 0.1uF
PS_NVVDD_PH8_DRVL
R1331 2.2k
Q38
FDPC5018SG
Q39
FDPC5018SG
PS_NVVDD_PHASE8
C1681 270UF
C163 1uF
C161 1uF
C169 10uF
C595 0.1uF
C592 0.1uF
C583 1uF
C564 1uF
C578 1uF
C568 1uF
C164 1uF
L19 0.2UH
C1493 820pF
R1333 1.8ohm
NS15
NS16
C1674 10uF
C1675 10uF
C1676 10uF
C1677 10uF
PS_NVVDD_CSN8
PS_NVVDD_PH8

MICRO-STAR INT'L CO.,LTD

MS-V360

Size	Document Description	Rev
Custom	PS:NVVDD Phase 6,7	2.0

Date: Friday, March 03, 2017 Sheet 38 of 50

Page39: PS: Dynamic Power Balance Phases

MICRO-STAR INT'L CO.,LTD

MS-V360

Size	Document Description	Rev
Custom	Dynamic Power Balance Phases	2.0

Date: Friday, March 03, 2017 Sheet 39 of 50

Page40: PS: Dynamic Power Balance Logic

MICRO-STAR INT'L CO.,LTD

MS-V360

Size	Document Description	Rev
Custom	PS: Dynamic Power Balance Logic	2.0

Date: Friday, March 03, 2017

Page41: PS: Inputs, Filtering, and Monitoring

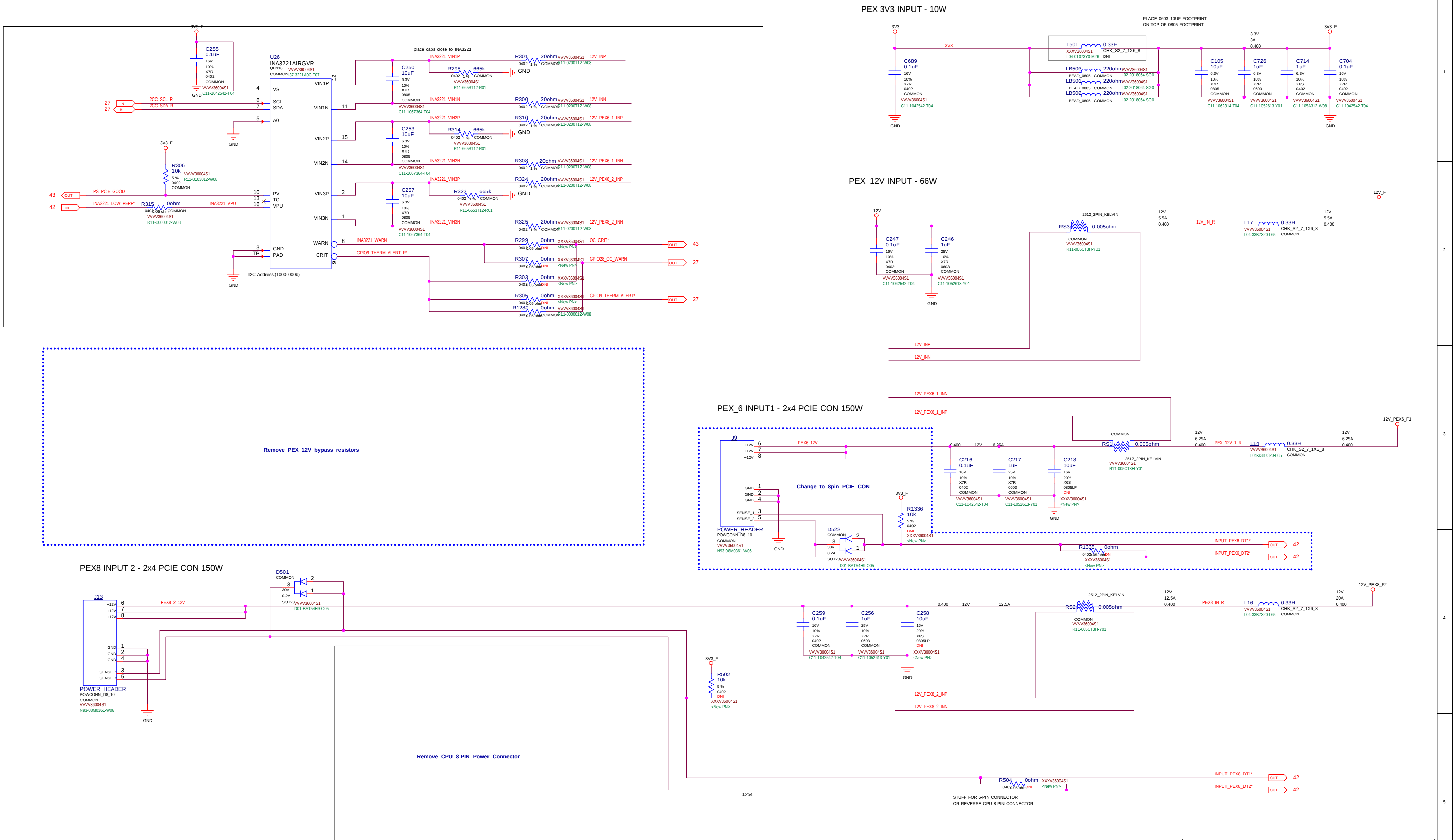
PEX 3V3 INPUT - 10W
PLACE 0603 10UF FOOTPRINT ON TOP OF 0805 FOOTPRINT
3V3
3V3_F
L501 0.33H CHK_S2_7_1X6_8 DNI
LB503 220ohm
LB501 220ohm
LB502 220ohm
C689 0.1uF
C105 10uF
C726 1uF
C714 1uF
C704 0.1uF
3.3V 3A 0.400
GND
PEX_12V INPUT - 66W
12V
12V_F
RS3 0.005ohm 2512_2PIN_KELVIN
L17 0.33H CHK_S2_7_1X6_8
12V_IN_R
12V 5.5A 0.400
C247 0.1uF
C246 1uF
12V_INP
12V_INN
U26 INA3221AIRGVR QFN16
place caps close to INA3221
C255 0.1uF
VS
SCL
SDA
A0
PV
TC
VPU
GND
PAD
VIN1P
VIN1N
VIN2P
VIN2N
VIN3P
VIN3N
WARN
CRIT
I2CC_SCL_R
I2CC_SDA_R
PS_PCIE_GOOD
INA3221_LOW_PERF*
INA3221_VPU
R306 10k
R315 0ohm
C250 10uF
C253 10uF
C257 10uF
R298 665k
R314 665k
R322 665k
R301 20ohm
R300 20ohm
R310 20ohm
R308 20ohm
R324 20ohm
R325 20ohm
12V_INP
12V_INN
12V_PEX6_1_INP
12V_PEX6_1_INN
12V_PEX8_2_INP
12V_PEX8_2_INN
INA3221_WARN
GPIO9_THERM_ALERT_R*
R299 0ohm
R307 0ohm
R303 0ohm
R305 0ohm
R1280 0ohm
OC_CRIT*
GPIO28_OC_WARN
GPIO9_THERM_ALERT*
I2C Address:(1000 000b)
Remove PEX_12V bypass resistors
PEX_6 INPUT1 - 2x4 PCIE CON 150W
J9 POWER_HEADER POWCONN_D8_10
PEX6_12V
Change to 8pin PCIE CON
C216 0.1uF
C217 1uF
C218 10uF
RS1 0.005ohm 2512_2PIN_KELVIN
PEX_12V_1_R
L14 0.33H CHK_S2_7_1X6_8
12V 6.25A 0.400
12V_PEX6_F1
D522
R1336 10k
R1335 0ohm
INPUT_PEX6_DT1*
INPUT_PEX6_DT2*
PEX8 INPUT 2 - 2x4 PCIE CON 150W
J13 POWER_HEADER POWCONN_D8_10
PEX8_2_12V
D501
C259 0.1uF
C256 1uF
C258 10uF
RS2 0.005ohm 2512_2PIN_KELVIN
PEX8_IN_R
L16 0.33H CHK_S2_7_1X6_8
12V 12.5A 0.400
12V 20A 0.400
12V_PEX8_F2
R502 10k
R504 0ohm
INPUT_PEX8_DT1*
INPUT_PEX8_DT2*
Remove CPU 8-PIN Power Connector
STUFF FOR 6-PIN CONNECTOR OR REVERSE CPU 8-PIN CONNECTOR
42
43
27

MICRO-STAR INT'L CO.,LTD

MS-V360

Size	Document Description	Rev
Custom	PS: Inputs, Filtering, and Monitoring	2.0

Date: Friday, March 03, 2017 Sheet 41 of 50

Page42: PS: 12V Current Steering & Hot Unplug Detect

QUADRO/TESLA:

12V CURRENT STEERING (UNDER POWER BOOT):

GUIDES CURRENT FROM PEX EDGE TO PEX 8 PIN INPUT AREA

For OpenVreg Type4 + Phase Doubler, 2 phase PSI mode

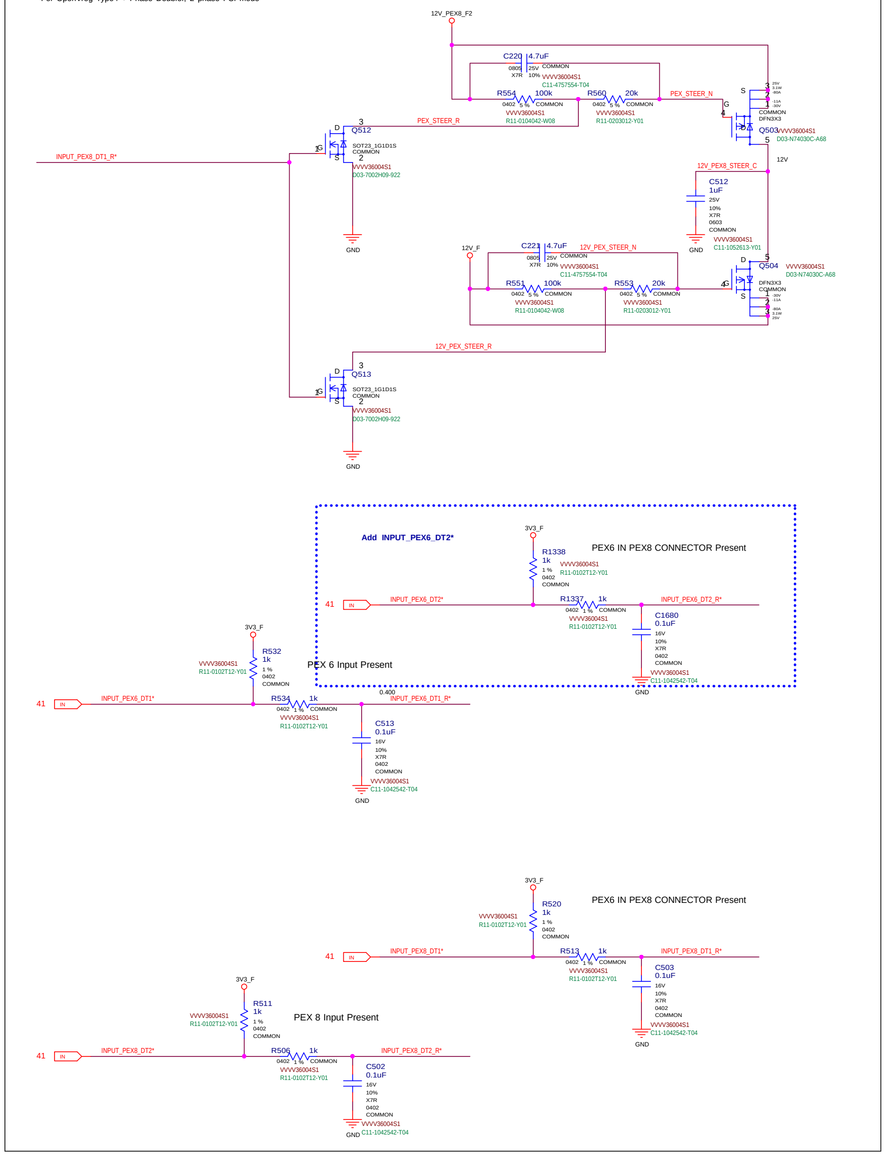
12V_PEX8_F2
C220 4.7uF 0805 X7R 25V 10% COMMON VVVV36004S1 C11-4757554-T04
R554 100k 0402 5% COMMON VVVV36004S1 R11-0104042-W08
R560 20k 0402 5% COMMON VVVV36004S1 R11-0203012-Y01
PEX_STEER_N
Q503 DFN3X3 COMMON VVVV36004S1 D03-N74030C-A68
PEX_STEER_R
Q512 SOT23_1G1D1S COMMON VVVV36004S1 D03-7002H09-922
INPUT_PEX8_DT1_R*
12V_PEX8_STEER_C
C512 1uF 25V 10% X7R 0603 COMMON VVVV36004S1 C11-1052613-Y01
12V
12V_F
C221 4.7uF 0805 X7R 25V 10% COMMON VVVV36004S1 C11-4757554-T04
12V_PEX_STEER_N
R551 100k 0402 5% COMMON VVVV36004S1 R11-0104042-W08
R553 20k 0402 5% COMMON VVVV36004S1 R11-0203012-Y01
Q504 DFN3X3 COMMON VVVV36004S1 D03-N74030C-A68
12V_PEX_STEER_R
Q513 SOT23_1G1D1S COMMON VVVV36004S1 D03-7002H09-922
GND
Add INPUT_PEX6_DT2*
PEX6 IN PEX8 CONNECTOR Present
3V3_F
R1338 1k 1% 0402 COMMON VVVV36004S1 R11-0102T12-Y01
41 IN INPUT_PEX6_DT2*
R1337 1k 0402 1% COMMON VVVV36004S1 R11-0102T12-Y01
INPUT_PEX6_DT2_R*
C1680 0.1uF 16V 10% X7R 0402 COMMON VVVV36004S1 C11-1042542-T04
PEX 6 Input Present
R532 1k 1% 0402 COMMON VVVV36004S1 R11-0102T12-Y01
41 IN INPUT_PEX6_DT1*
R534 1k 0402 1% COMMON VVVV36004S1 R11-0102T12-Y01
INPUT_PEX6_DT1_R*
0.400
C513 0.1uF 16V 10% X7R 0402 COMMON VVVV36004S1 C11-1042542-T04
PEX6 IN PEX8 CONNECTOR Present
R520 1k 1% 0402 COMMON VVVV36004S1 R11-0102T12-Y01
41 IN INPUT_PEX8_DT1*
R513 1k 0402 1% COMMON VVVV36004S1 R11-0102T12-Y01
INPUT_PEX8_DT1_R*
C503 0.1uF 16V 10% X7R 0402 COMMON VVVV36004S1 C11-1042542-T04
PEX 8 Input Present
R511 1k 1% 0402 COMMON VVVV36004S1 R11-0102T12-Y01
41 IN INPUT_PEX8_DT2*
R506 1k 0402 1% COMMON VVVV36004S1 R11-0102T12-Y01
INPUT_PEX8_DT2_R*
C502 0.1uF 16V 10% X7R 0402 COMMON VVVV36004S1 C11-1042542-T04

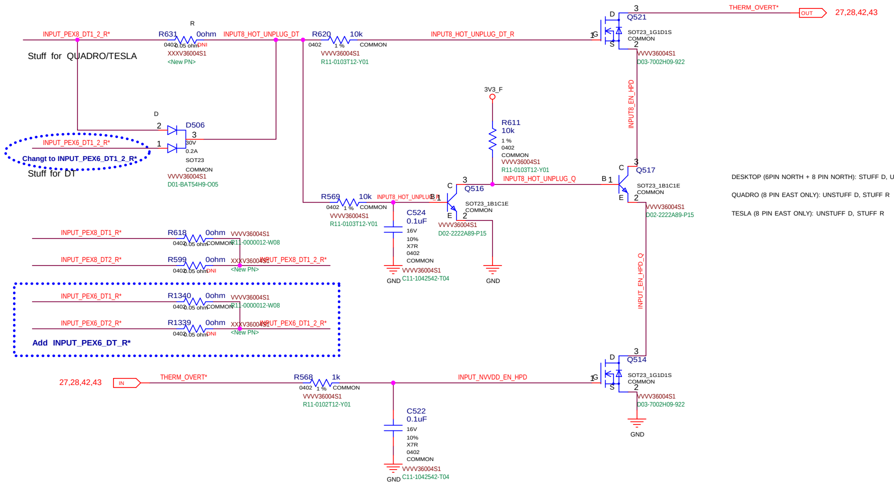
INPUT_PEX8_DT1_R*
R631 0ohm 0402 0.05 ohm DNI XXXV36004S1 <New PN>
INPUT8_HOT_UNPLUG_DT
R620 10k 0402 1% COMMON VVVV36004S1 R11-0103T12-Y01
INPUT8_HOT_UNPLUG_DT_R
Q521 SOT23_1G1D1S COMMON VVVV36004S1 D03-7002H09-922
THERM_OVERT* OUT 27,28,42,43
Stuff for QUADRO/TESLA
D506 30V 0.2A SOT23 COMMON VVVV36004S1 D01-BAT54H9-O05
INPUT_PEX6_DT1_2_R*
Change to INPUT_PEX6_DT1_2_R*
Stuff for DT
3V3_F
R611 10k 1% 0402 COMMON VVVV36004S1 R11-0103T12-Y01
INPUT8_HOT_UNPLUG_Q
Q517 SOT23_1B1C1E COMMON VVVV36004S1 D02-2222A89-P15
INPUT8_EN_HPD
R569 10k 0402 1% COMMON VVVV36004S1 R11-0103T12-Y01
INPUT8_HOT_UNPLUG_B
Q516 SOT23_1B1C1E COMMON VVVV36004S1 D02-2222A89-P15
C524 0.1uF 16V 10% X7R 0402 COMMON VVVV36004S1 C11-1042542-T04
INPUT_PEX8_DT1_R* R618 0ohm 0402 0.05 ohm COMMON VVVV36004S1 R11-0000012-W08
INPUT_PEX8_DT2_R* R599 0ohm 0402 0.05 ohm DNI XXXV36004S1 <New PN> INPUT_PEX8_DT1_2_R*
INPUT_PEX6_DT1_R* R1340 0ohm 0402 0.05 ohm COMMON VVVV36004S1 R11-0000012-W08
INPUT_PEX6_DT2_R* R1339 0ohm 0402 0.05 ohm DNI XXXV36004S1 <New PN> INPUT_PEX6_DT1_2_R*
Add INPUT_PEX6_DT_R*
INPUT_EN_HPD_Q
27,28,42,43 IN THERM_OVERT*
R568 1k 0402 1% COMMON VVVV36004S1 R11-0102T12-Y01
INPUT_NVVDD_EN_HPD
Q514 SOT23_1G1D1S COMMON VVVV36004S1 D03-7002H09-922
C522 0.1uF 16V 10% X7R 0402 COMMON VVVV36004S1 C11-1042542-T04
GND

DESKTOP (6PIN NORTH + 8 PIN NORTH): STUFF D, UNSTUFF R

QUADRO (8 PIN EAST ONLY): UNSTUFF D, STUFF R

TESLA (8 PIN EAST ONLY): UNSTUFF D, STUFF R

PEX Input - Under Power Boot Controls

GPIO12_LOW_PERF*	GPU SPEED
0	Slow
1	Normal

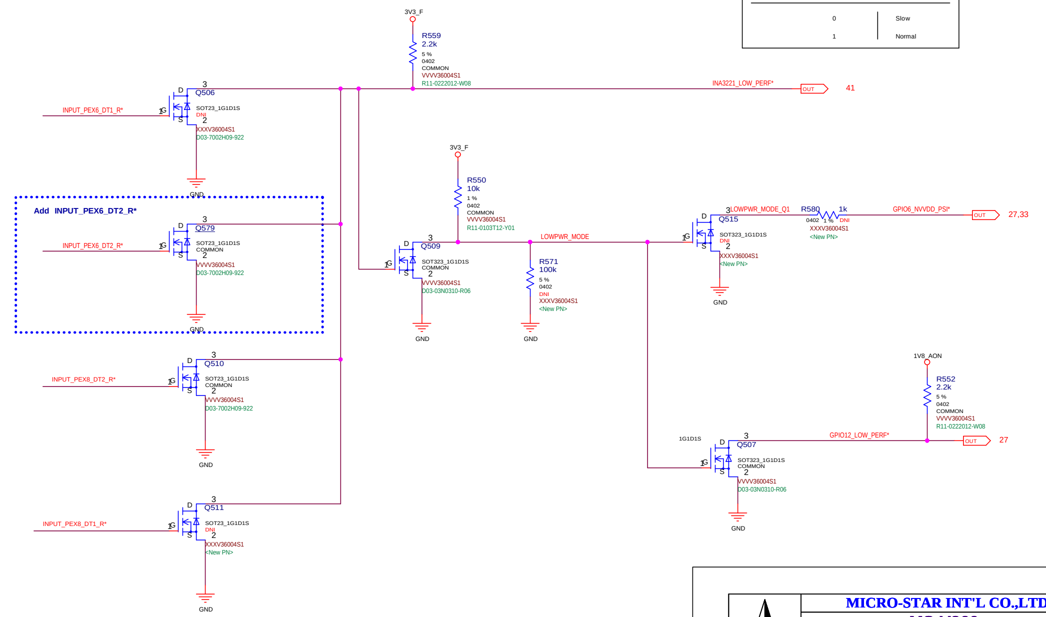
3V3_F
R559 2.2k 5% 0402 COMMON VVVV36004S1 R11-0222012-W08
INA3221_LOW_PERF* OUT 41
INPUT_PEX6_DT1_R*
Q506 SOT23_1G1D1S DNI XXXV36004S1 D03-7002H09-922
Add INPUT_PEX6_DT2_R*
INPUT_PEX6_DT2_R*
Q579 SOT23_1G1D1S COMMON VVVV36004S1 D03-7002H09-922
R550 10k 1% 0402 COMMON VVVV36004S1 R11-0103T12-Y01
Q509 SOT323_1G1D1S COMMON VVVV36004S1 D03-03N0310-R06
LOWPWR_MODE
R571 100k 5% 0402 DNI XXXV36004S1 <New PN>
LOWPWR_MODE_Q1
Q515 SOT323_1G1D1S DNI XXXV36004S1 <New PN>
R580 1k 0402 1% DNI XXXV36004S1 <New PN>
GPIO6_NVVDD_PSI* OUT 27,33
INPUT_PEX8_DT2_R*
Q510 SOT23_1G1D1S COMMON VVVV36004S1 D03-7002H09-922
1V8_AON
R552 2.2k 5% 0402 COMMON VVVV36004S1 R11-0222012-W08
GPIO12_LOW_PERF* OUT 27
Q507 SOT323_1G1D1S COMMON VVVV36004S1 D03-03N0310-R06
INPUT_PEX8_DT1_R*
Q511 SOT23_1G1D1S DNI XXXV36004S1 <New PN>
GND

A 2 x 4 auxiliary power connector plug from the power supply unit must not use the 75 W sense coding (Sense1=Open and Sense0=Ground) to avoid end-user confusion.

MICRO-STAR INT'L CO.,LTD
MS-V360

Size	Document Description	Rev
Custom	PS: 12V Current Steering & Hot Unplug Detect	2.0
Date: Friday, March 03, 2017	Sheet 42 of 50	

Page43: PS: NVVDD ENABLE

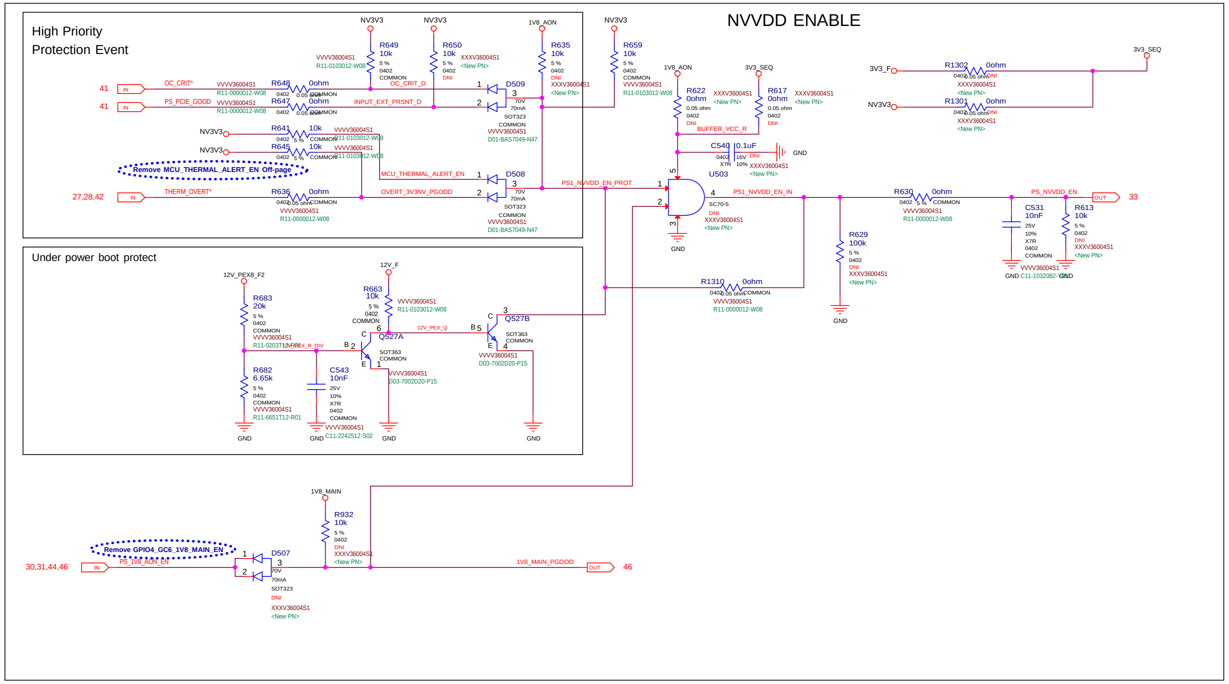
NVVDD ENABLE
High Priority
Protection Event
Under power boot protect
NV3V3
NV3V3
1V8_AON
NV3V3
R649
10k
R650
10k
R635
10k
R659
10k
5 %
0402
COMMON
DNI
VVVV36004S1
XXXV36004S1
<New PN>
R11-0103012-W08
41
OC_CRIT*
41
PS_PCIE_GOOD
R648
0ohm
R647
0ohm
0.05 ohm
R11-0000012-W08
OC_CRIT_D
INPUT_EXT_PRSNT_D
D509
70V
70mA
SOT323
D01-BAS7049-N47
NV3V3
R641
10k
NV3V3
R645
10k
Remove MCU_THERMAL_ALERT_EN Off-page
MCU_THERMAL_ALERT_EN
D508
27,28,42
THERM_OVERT*
R636
0ohm
OVERT_3V3NV_PGODD
PS1_NVVDD_EN_PROT
1V8_AON
R622
0ohm
3V3_SEQ
R617
0ohm
BUFFER_VCC_R
C540
0.1uF
16V
10%
X7R
GND
U503
SC70-5
PS1_NVVDD_EN_IN
3V3_F
R1302
0ohm
NV3V3
R1301
0ohm
3V3_SEQ
R630
0ohm
PS_NVVDD_EN
OUT
33
C531
10nF
25V
10%
X7R
R613
10k
R629
100k
C11-1032082-Y05
GND
R1310
0ohm
12V_PEX8_F2
R683
20k
R11-0203T12-R01
12V_PEX_R_DIV
R682
6.65k
R11-6651T12-R01
C543
10nF
C11-2242512-S02
12V_F
R663
10k
Q527A
SOT363
D03-7002D20-P15
12V_PEX_Q
Q527B
1V8_MAIN
R932
10k
Remove GPIO4_GC6_1V8_MAIN_EN
30,31,44,46
IN
PS_1V8_AON_EN
D507
1V8_MAIN_PGOOD
OUT
46

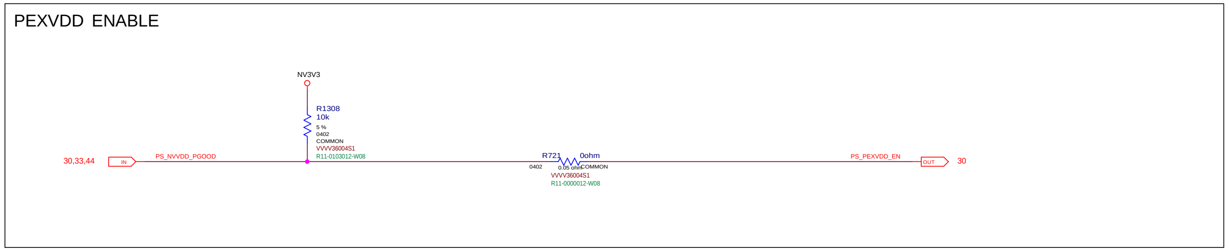
PEXVDD ENABLE
NV3V3
R1308
10k
5 %
0402
COMMON
VVVV36004S1
R11-0103012-W08
30,33,44
IN
PS_NVVDD_PGOOD
R721
0ohm
0402
0.05 ohm
COMMON
VVVV36004S1
R11-0000012-W08
PS_PEXVDD_EN
OUT
30

MSI

MICRO-STAR INT'L CO.,LTD

MS-V360

Size	Document Description	Rev
Custom	PS: NVVDD ENABLE	2.0

Date: Friday, March 03, 2017 Sheet 43 of 50

Page44: GC6 MISC

Remove PEX_CLKREQ*

Remove GPU_EVENT*

PEX_RST# LOGIC

Accept 3V3 Logic

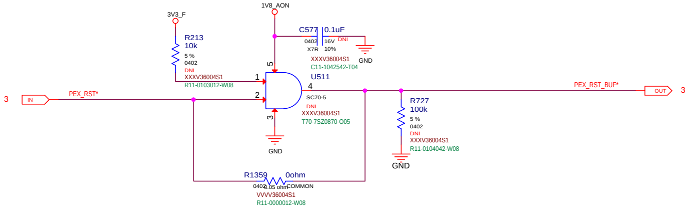
3V3_F
1V8_AON
R213
10k
5 %
0402
DNI
XXXV36004S1
R11-0103012-W08
C577
0.1uF
0402
16V
X7R
10%
DNI
XXXV36004S1
C11-1042542-T04
GND
U511
SC70-5
DNI
XXXV36004S1
T70-7SZ0870-O05
1
2
3
4
5
3
IN
PEX_RST*
R727
100k
5 %
0402
DNI
XXXV36004S1
R11-0104042-W08
GND
R1359
0ohm
0402
0.05 ohm
COMMON
VVVV36004S1
R11-0000012-W08
PEX_RST_BUF*
OUT
3

FBVDD/Q ENABLE

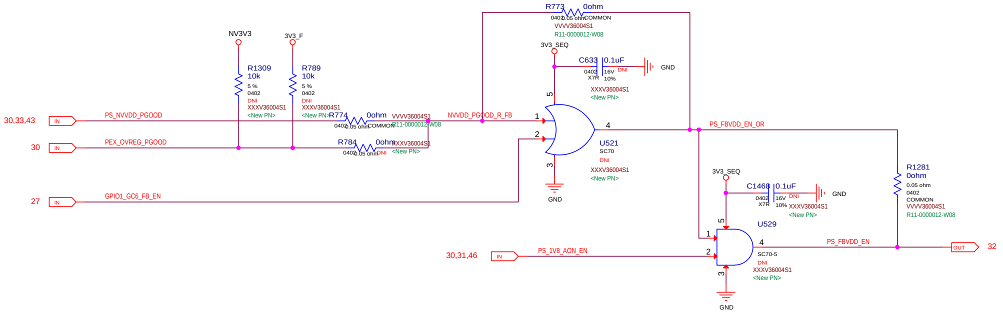
NV3V3
3V3_F
R1309
10k
5 %
0402
DNI
XXXV36004S1
<New PN>
R789
10k
5 %
0402
DNI
XXXV36004S1
<New PN>
30,33,43
IN
PS_NVVDD_PGOOD
30
IN
PEX_OVREG_PGOOD
27
IN
GPIO1_GC6_FB_EN
R774
0ohm
0402
0.05 ohm
COMMON
VVVV36004S1
R11-0000012-W08
R784
0ohm
0402
0.05 ohm
DNI
XXXV36004S1
<New PN>
NVVDD_PGOOD_R_FB
R773
0ohm
0402
0.05 ohm
COMMON
VVVV36004S1
R11-0000012-W08
3V3_SEQ
C633
0.1uF
0402
16V
X7R
10%
DNI
GND
XXXV36004S1
<New PN>
U521
SC70
DNI
XXXV36004S1
<New PN>
GND
PS_FBVDD_EN_OR
R1281
0ohm
0.05 ohm
0402
COMMON
VVVV36004S1
R11-0000012-W08
3V3_SEQ
C1468
0.1uF
0402
16V
X7R
10%
DNI
XXXV36004S1
<New PN>
GND
U529
SC70-5
DNI
XXXV36004S1
<New PN>
GND
30,31,46
IN
PS_1V8_AON_EN
PS_FBVDD_EN
OUT
32

MICRO-STAR INT'L CO.,LTD
MS-V360
Size Custom
Document Description GC6 MISC
Rev 2.0
Date: Friday, March 03, 2017
Sheet 44 of 50

Page45:GEFORCE LED & SLI LED

Remove LED HEADER(GEFORCE ONLY)

SLI LED (GEFORCE ONLY)

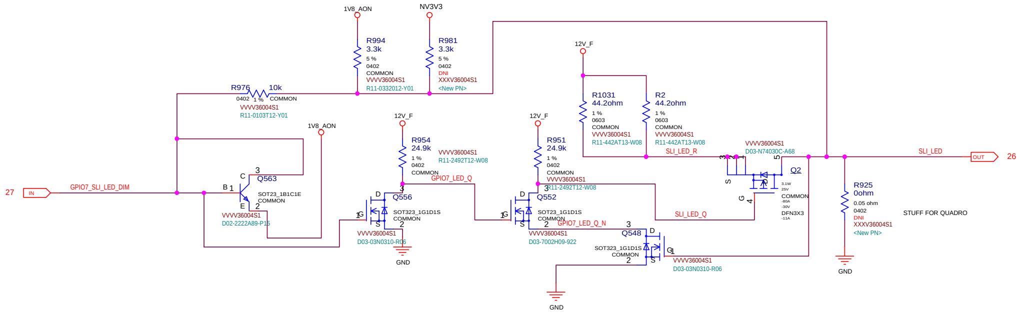
1V8_AON
NV3V3
R994
3.3k
5 %
0402
COMMON
VVVV36004S1
R11-0332012-Y01
R981
3.3k
5 %
0402
DNI
XXXV36004S1
<New PN>
R976
10k
0402
1 %
COMMON
VVVV36004S1
R11-0103T12-Y01
1V8_AON
27
IN
GPIO7_SLI_LED_DIM
B
1
C
3
Q563
E
2
SOT23_1B1C1E
COMMON
VVVV36004S1
D02-2222A89-P15
12V_F
R954
24.9k
1 %
0402
COMMON
VVVV36004S1
R11-2492T12-W08
GPIO7_LED_Q
D
3
Q556
1
G
S
2
SOT323_1G1D1S
COMMON
VVVV36004S1
D03-03N0310-R06
GND
12V_F
R951
24.9k
1 %
0402
COMMON
VVVV36004S1
R11-2492T12-W08
D
3
Q552
1
G
S
2
SOT23_1G1D1S
COMMON
GPIO7_LED_Q_N
VVVV36004S1
D03-7002H09-922
3
Q548
D
SOT323_1G1D1S
COMMON
2
S
G
1
VVVV36004S1
D03-03N0310-R06
GND
12V_F
R1031
44.2ohm
1 %
0603
COMMON
VVVV36004S1
R11-442AT13-W08
R2
44.2ohm
1 %
0603
COMMON
VVVV36004S1
R11-442AT13-W08
SLI_LED_R
SLI_LED_Q
VVVV36004S1
D03-N74030C-A68
3
2
1
5
S
G
4
D
Q2
3.1W
25V
COMMON
-80A
-30V
DFN3X3
-11A
SLI_LED
OUT
26
R925
0ohm
0.05 ohm
0402
DNI
XXXV36004S1
<New PN>
GND
STUFF FOR QUADRO

MICRO-STAR INT'L CO.,LTD

MS-V360

Size
Custom

Document Description
GEFORCE LED & SLI LED

Rev
2.0

Date: Friday, March 03, 2017

Page46:NV3V3, NV12V

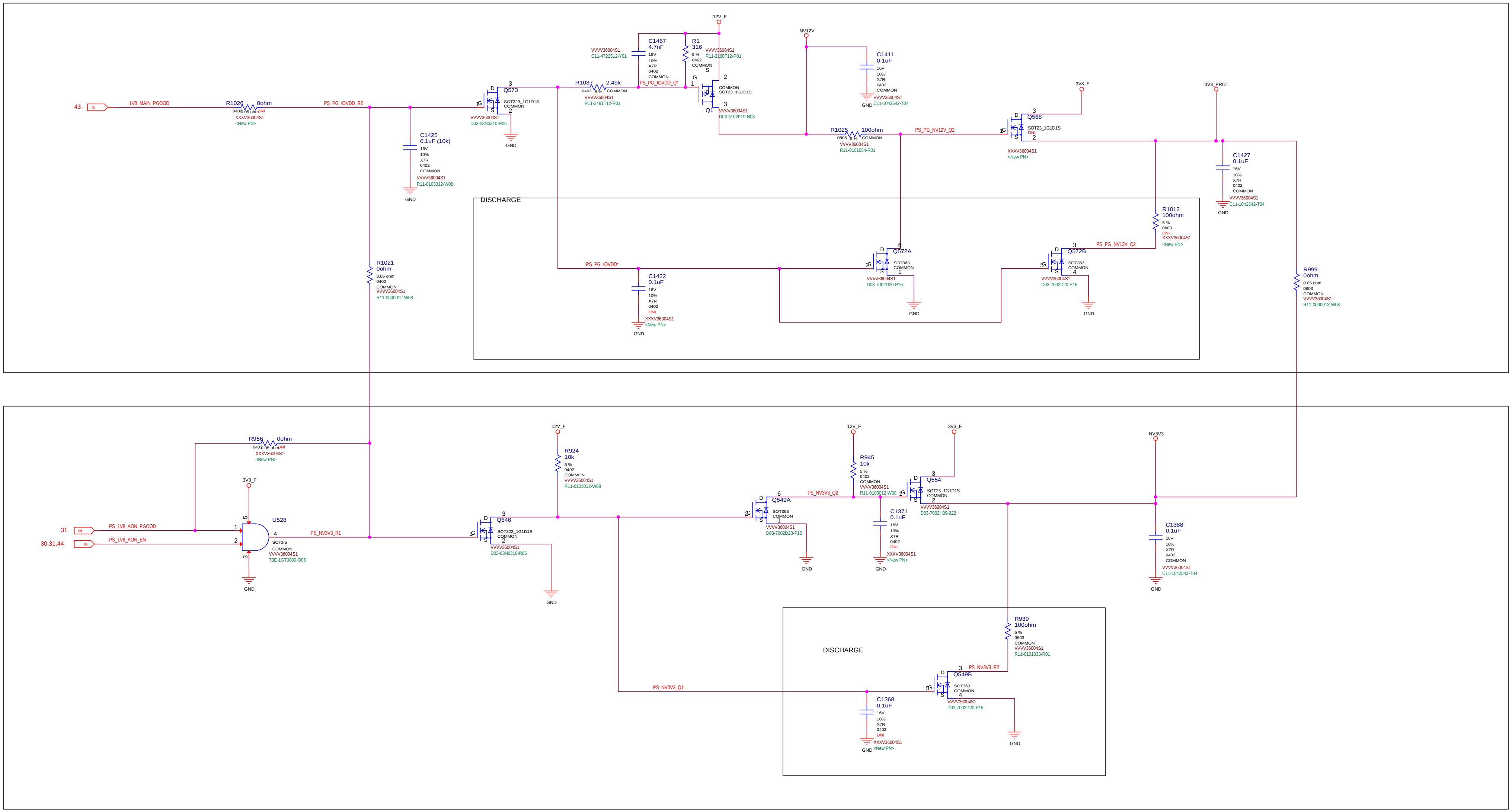
43
IN
1V8_MAIN_PGOOD
R1026 0ohm
0402 0.05 ohm DNI
XXXV36004S1
<New PN>
PS_PG_IOVDD_R2
C1425
0.1uF (10k)
16V
10%
X7R
0402
COMMON
VVVV36004S1
R11-0103012-W08
GND
D
Q573
3
1 G
S
2
SOT323_1G1D1S
COMMON
VVVV36004S1
D03-03N0310-R06
GND
R1037 2.49k
0402 5 % COMMON
VVVV36004S1
R11-2491T12-R01
PS_PG_IOVDD_Q*
C1467
4.7nF
16V
10%
X7R
0402
COMMON
VVVV36004S1
C11-4722512-Y01
R1
316
5 %
0402
COMMON
VVVV36004S1
R11-3160T12-R01
12V_F
G
S
D
1
2
3
Q1
COMMON
SOT23_1G1D1S
VVVV36004S1
D03-5102F19-N03
NV12V
C1411
0.1uF
16V
10%
X7R
0402
COMMON
VVVV36004S1
C11-1042542-T04
GND
R1025 100ohm
0805 5 % COMMON
VVVV36004S1
R11-0101054-R01
PS_PG_NV12V_Q2
3V3_F
D
Q568
3
1 G
S
2
SOT23_1G1D1S
DNI
XXXV36004S1
<New PN>
3V3_PROT
C1427
0.1uF
16V
10%
X7R
0402
COMMON
VVVV36004S1
C11-1042542-T04
GND
DISCHARGE
PS_PG_IOVDD*
C1422
0.1uF
16V
10%
X7R
0402
DNI
XXXV36004S1
<New PN>
GND
D
Q572A
6
2 G
S
1
SOT363
COMMON
VVVV36004S1
D03-7002D20-P15
GND
D
Q572B
3
5 G
S
4
SOT363
COMMON
VVVV36004S1
D03-7002D20-P15
GND
PS_PG_NV12V_Q2
R1012
100ohm
5 %
0603
DNI
XXXV36004S1
<New PN>
R1021
0ohm
0.05 ohm
0402
COMMON
VVVV36004S1
R11-0000012-W08
R999
0ohm
0.05 ohm
0603
COMMON
VVVV36004S1
R11-0000013-W08
R956 0ohm
0402 0.05 ohm DNI
XXXV36004S1
<New PN>
3V3_F
31
IN
PS_1V8_AON_PGOOD
30,31,44
IN
PS_1V8_AON_EN
U528
1
2
3
4
5
SC70-5
COMMON
VVVV36004S1
T3E-1GT0800-O05
GND
PS_NV3V3_R1
12V_F
R924
10k
5 %
0402
COMMON
VVVV36004S1
R11-0103012-W08
D
Q546
3
1 G
S
2
SOT323_1G1D1S
COMMON
VVVV36004S1
D03-03N0310-R06
GND
D
Q549A
6
2 G
S
1
SOT363
COMMON
VVVV36004S1
D03-7002D20-P15
GND
PS_NV3V3_Q2
12V_F
R945
10k
5 %
0402
COMMON
VVVV36004S1
R11-0103012-W08
C1371
0.1uF
16V
10%
X7R
0402
DNI
XXXV36004S1
<New PN>
GND
3V3_F
D
Q554
3
1 G
S
2
SOT23_1G1D1S
COMMON
VVVV36004S1
D03-7002H09-922
NV3V3
C1388
0.1uF
16V
10%
X7R
0402
COMMON
VVVV36004S1
C11-1042542-T04
GND
DISCHARGE
R939
100ohm
5 %
0603
COMMON
VVVV36004S1
R11-0101033-R01
PS_NV3V3_R2
D
Q549B
3
5 G
S
4
SOT363
COMMON
VVVV36004S1
D03-7002D20-P15
GND
PS_NV3V3_Q1
C1368
0.1uF
16V
10%
X7R
0402
DNI
XXXV36004S1
<New PN>
GND

MICRO-STAR INT'L CO.,LTD

MS-V360

Size	Document Description	Rev
Custom	NV3V3, NV12V	2.0

Date: Friday, March 03, 2017 Sheet 46 of 50

Page47: MCU

MICRO-STAR INT'L CO.,LTD

MS-V360

Size Custom	Document Description MCU	Rev 2.0
Date: Friday, March 03, 2017		Sheet 47 of 50

Page48: Mechanical: Bracket/Thermal Solution

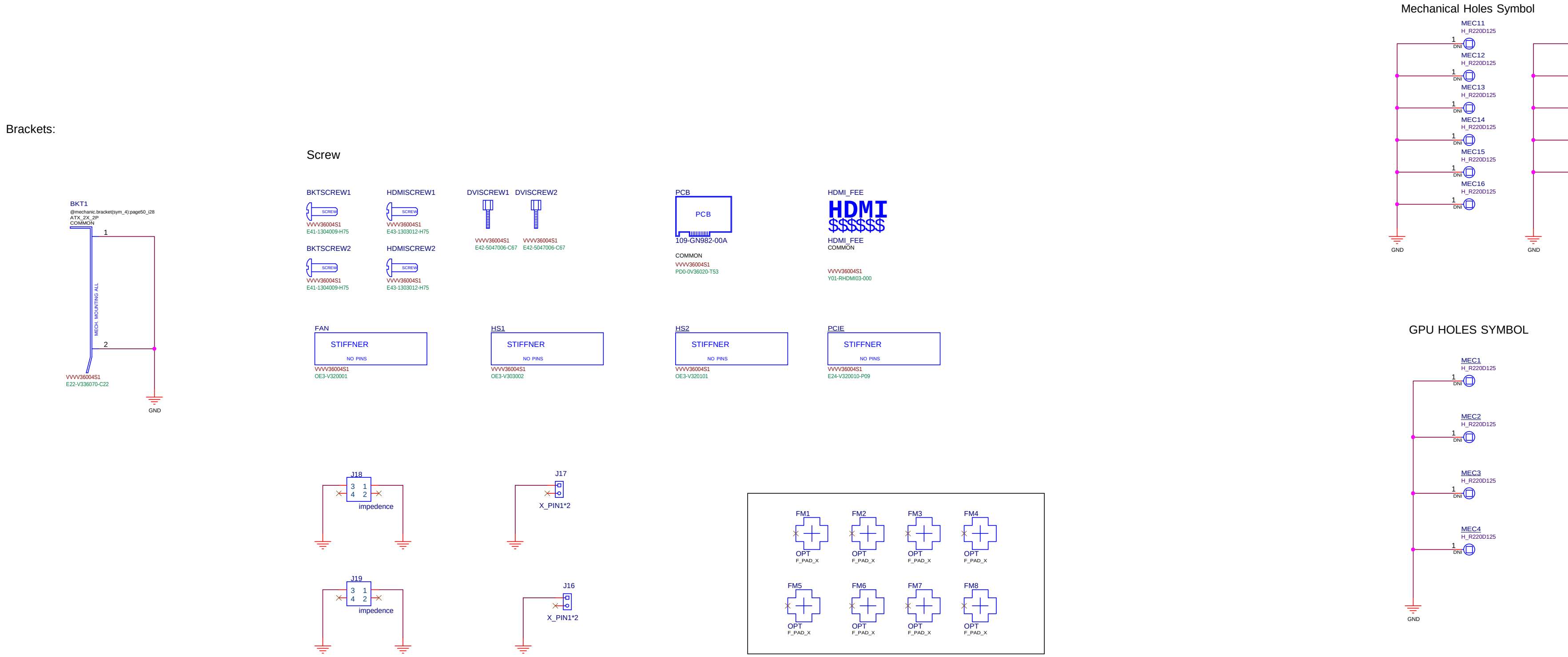
Brackets:
BKT1
@mechanic.bracket(sym_4):page50_i28
ATX_2X_2P
COMMON
1
2
MECH. MOUNTING ALL
VVVV36004S1
E22-V336070-C22
GND
Screw
BKTSCREW1
SCREW
VVVV36004S1
E41-1304009-H75
HDMISCREW1
SCREW
VVVV36004S1
E43-1303012-H75
BKTSCREW2
SCREW
VVVV36004S1
E41-1304009-H75
HDMISCREW2
SCREW
VVVV36004S1
E43-1303012-H75
DVISCREW1
VVVV36004S1
E42-5047006-C67
DVISCREW2
VVVV36004S1
E42-5047006-C67
PCB
PCB
109-GN982-00A
COMMON
VVVV36004S1
PD0-0V36020-T53
HDMI_FEE
HDMI
$$$$$$
HDMI_FEE
COMMON
VVVV36004S1
Y01-RHDMI03-000
FAN
STIFFNER
NO PINS
VVVV36004S1
OE3-V320001
HS1
STIFFNER
NO PINS
VVVV36004S1
OE3-V303002
HS2
STIFFNER
NO PINS
VVVV36004S1
OE3-V320101
PCIE
STIFFNER
NO PINS
VVVV36004S1
E24-V320010-P09
J18
3 1
4 2
impedence
J19
3 1
4 2
impedence
J17
X_PIN1*2
J16
X_PIN1*2
FM1 OPT F_PAD_X
FM2 OPT F_PAD_X
FM3 OPT F_PAD_X
FM4 OPT F_PAD_X
FM5 OPT F_PAD_X
FM6 OPT F_PAD_X
FM7 OPT F_PAD_X
FM8 OPT F_PAD_X
Mechanical Holes Symbol
MEC11 H_R220D125 1 DNI
MEC12 H_R220D125 1 DNI
MEC13 H_R220D125 1 DNI
MEC14 H_R220D125 1 DNI
MEC15 H_R220D125 1 DNI
MEC16 H_R220D125 1 DNI
GND
MEC17 H_R220D125 1 DNI
MEC18 H_R220D125 1 DNI
MEC19 H_R220D125 1 DNI
MEC20 H_R220D125 1 DNI
MEC21 H_R220D125 1 DNI
GND
GPU HOLES SYMBOL
MEC1 H_R220D125 1 DNI
MEC2 H_R220D125 1 DNI
MEC3 H_R220D125 1 DNI
MEC4 H_R220D125 1 DNI
GND

MICRO-STAR INT'L CO.,LTD

MS-V360

Size	Document Description	Rev
Custom	Mechanical: Bracket/Thermal Solution	2.0

Date: Friday, March 03, 2017

Sheet 48 of 50

Page49: VR THERMAL PROTECTION

MICRO-STAR INT'L CO.,LTD

MS-V360

Size Custom	Document Description VR THERMAL PROTECTION	Rev 2.0
Date: Friday, March 03, 2017		Sheet 49 of 50

Page39: LED_CONTROLLER_ENE3574

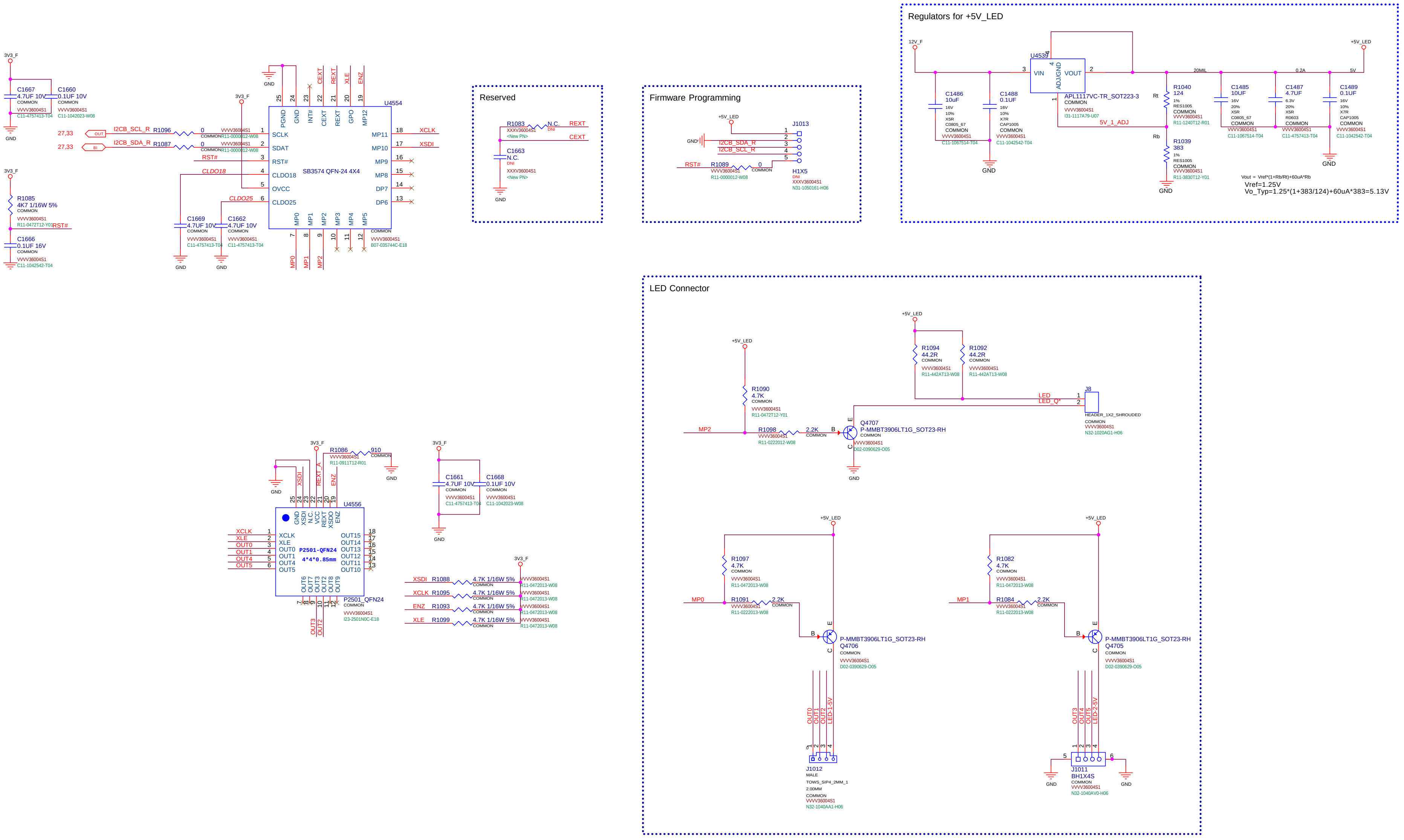

3V3_F
C1667
4.7UF 10V
C1660
0.1UF 10V
GND
I2CB_SCL_R
I2CB_SDA_R
R1096
R1087
27,33
OUT
BI
RST#
CLDO18
CLDO25
U4554
SB3574 QFN-24 4X4
SCLK
SDAT
CLDO18
OVCC
CLDO25
PGND
GND
INT#
CEXT
REXT
GPO
MP12
MP11
MP10
MP9
MP8
DP7
DP6
MP0
MP1
MP2
MP3
MP4
MP5
XCLK
XSDI
ENZ
C1669
4.7UF 10V
C1662
4.7UF 10V
R1085
4K7 1/16W 5%
C1666
0.1UF 16V
Reserved
R1083
N.C.
REXT
CEXT
C1663
N.C.
Firmware Programming
+5V_LED
J1013
R1089
H1X5
Regulators for +5V_LED
12V_F
U4539
VIN
VOUT
ADJ/GND
APL1117VC-TR_SOT223-3
5V_1_ADJ
20MIL
0.2A
C1486
10uF
C1488
0.1UF
R1040
124
Rt
R1039
383
Rb
C1485
10UF
C1487
4.7UF
C1489
0.1UF
Vout = Vref*(1+Rb/Rt)+60uA*Rb
Vref=1.25V
Vo_Typ=1.25*(1+383/124)+60uA*383=5.13V
LED Connector
R1094
44.2R
R1092
44.2R
J8
LED
LED_Q*
HEADER_1X2_SHROUDED
R1090
4.7K
MP2
R1098
2.2K
Q4707
P-MMBT3906LT1G_SOT23-RH
U4556
XCLK
XLE
OUT0
OUT1
OUT4
OUT5
P2501-QFN24
4*4*0.85mm
OUT15
OUT14
OUT13
OUT12
OUT11
OUT10
P2501_QFN24
R1086
910
C1661
4.7UF 10V
C1668
0.1UF 10V
XSDI R1088 4.7K 1/16W 5%
XCLK R1095 4.7K 1/16W 5%
ENZ R1093 4.7K 1/16W 5%
XLE R1099 4.7K 1/16W 5%
R1097
4.7K
MP0
R1091
2.2K
Q4706
P-MMBT3906LT1G_SOT23-RH
R1082
4.7K
MP1
R1084
2.2K
Q4705
P-MMBT3906LT1G_SOT23-RH
OUT0
OUT1
OUT2
LED-1-5V
J1012
MALE
TOWS_SIP4_2MM_1
OUT3
OUT4
OUT5
LED-2-5V
J1011
BH1X4S

MSI	**MICRO-STAR INT'L CO.,LTD**				
	MS-V360				
	Size Custom	Document Description LED_CONTROLLER_ENE3574			Rev 2.0
	Date: Friday, March 03, 2017		Sheet 50	of 50	