(1) PCI-EXPRESS EDGE CONNECTOR

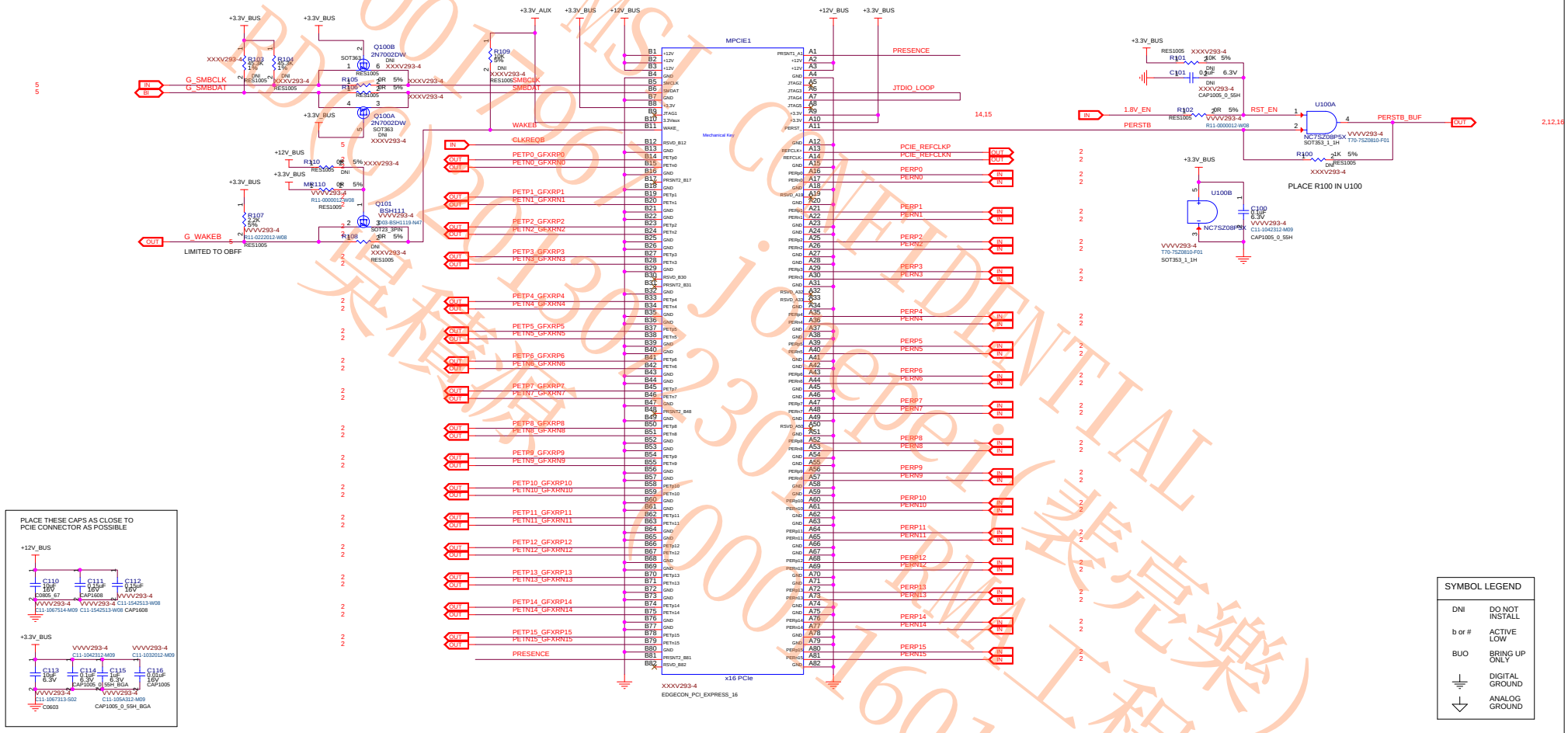

SYMBOL LEGEND	
DNI	DO NOT INSTALL
b or #	ACTIVE LOW
BUO	BRING UP ONLY
⏚	DIGITAL GROUND
⏚	ANALOG GROUND

MICRO-STAR INT'L CO.,LTD		
MS-V293		
Size: Custom	Document Description: 01_PCI-EXPRESS EDGE CONNECTOR	Rev: 10
Date: Friday, January 18, 2013	Sheet 1 of 19	

(2) BONAIRE PCIE INTERFACE

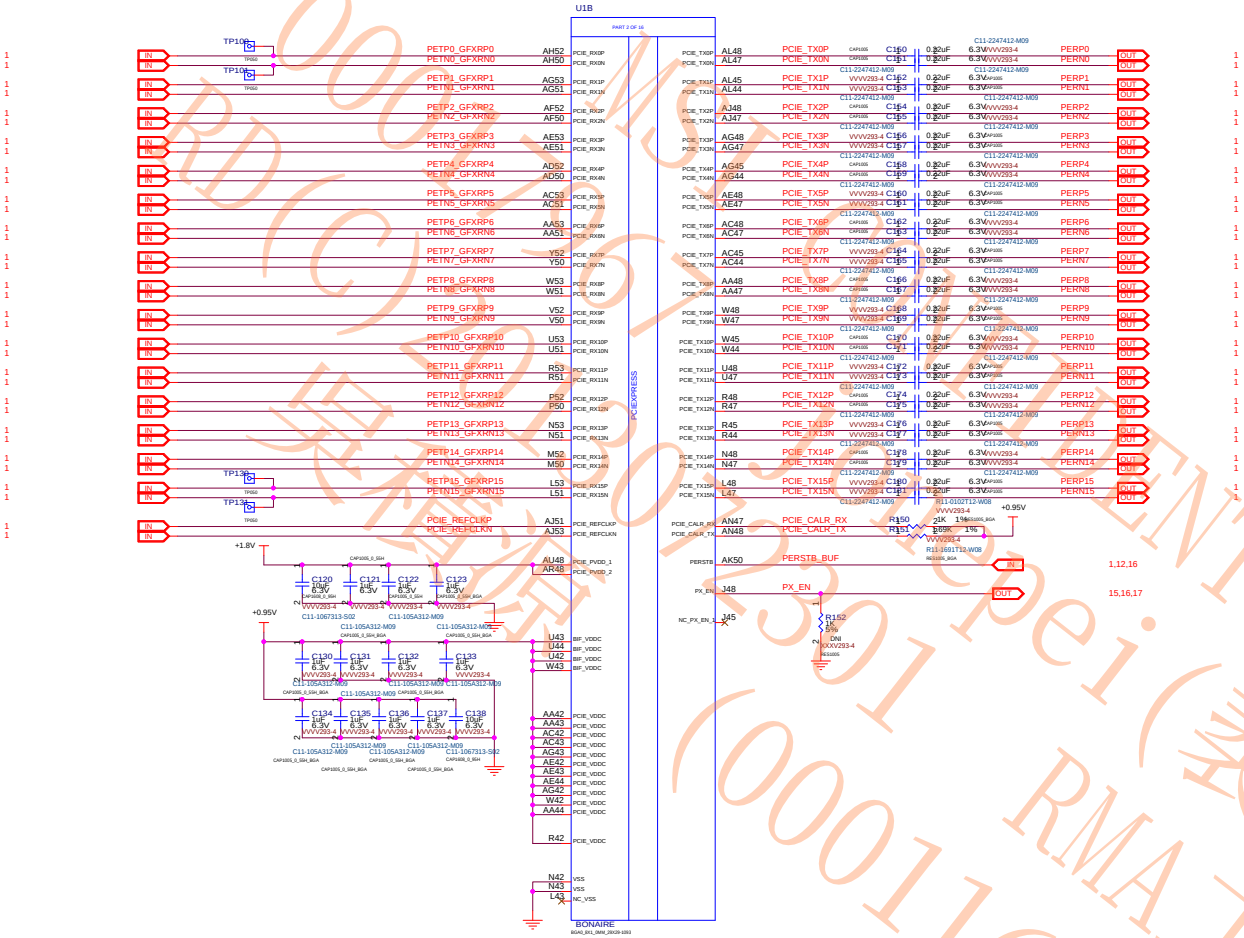

MSI CONFIDENTIAL
RD(Chengdu)
2013/01/30
Rev:1.0
RMA工程課
(0001601)

MICRO-STAR INT'L CO.,LTD		
MS-V293		
Size: Custom	Document Description: 02_BONAIRE PCIE INTERFACE	Rev: 10
Date: Friday, January 18, 2013	Sheet 2 of 19	

(3) BONAIRE MEMORY INTERFACE

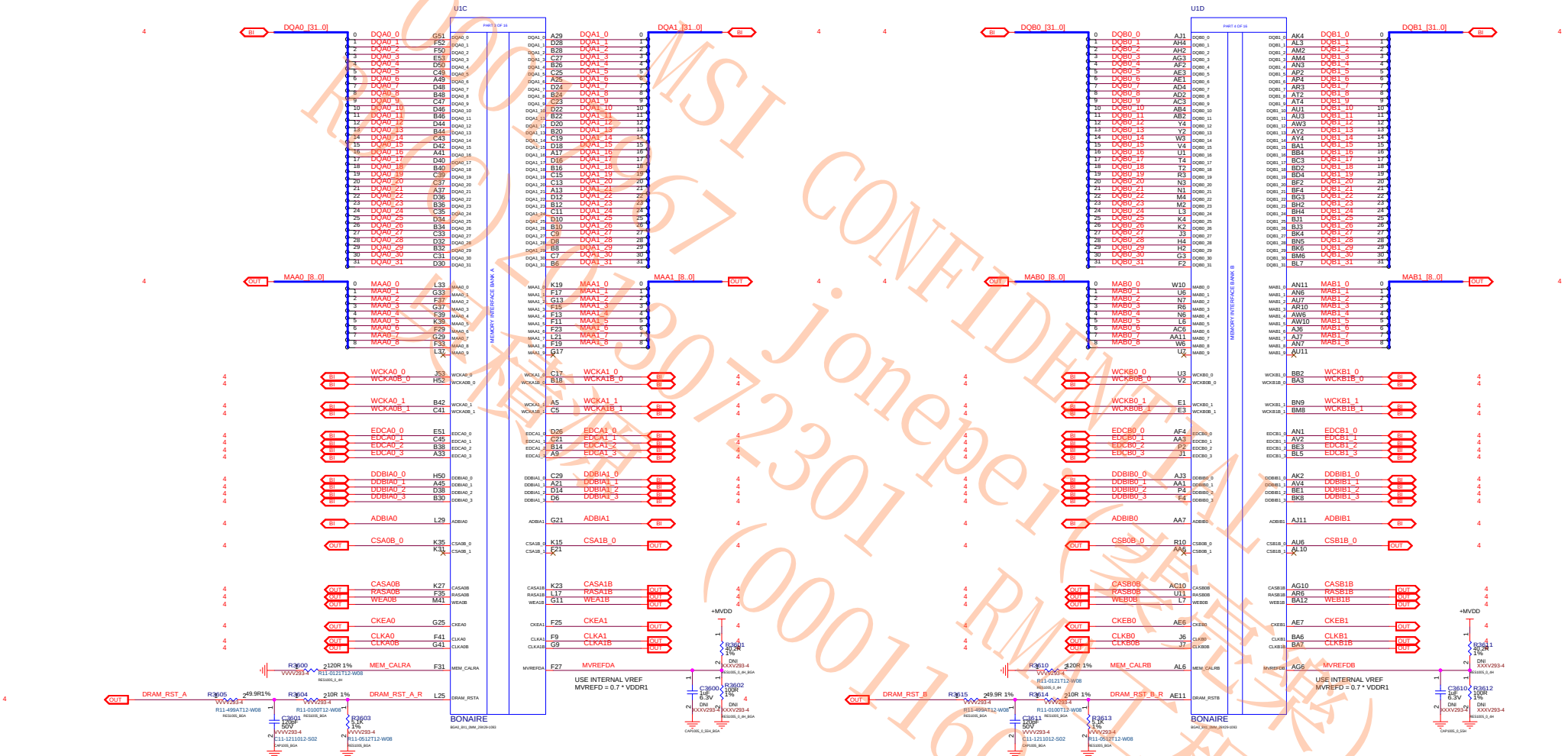

MSI CONFIDENTIAL
jonepei (裴建平)
RMA (00011601)
(00072301)
(資訊工程課)

MICRO-STAR INT'L CO.,LTD		
MS-V293		
Size: Custom	Document Description: 03_BONAIRE MEMORY INTERFACEE	Rev: 10
Date: Friday, January 18, 2013	Sheet 3 of 19	

(4) GDDR5 CHAB x32

MICRO-STAR INT'L CO.,LTD		
MS-V293		
Size: Custom	Document Description: 04_GDDR5 CHAB x32	Rev: 10
Date: Friday, January 18, 2013	Sheet 4 of 19	

(5) BONAIRE GPIO MLPS CF PLL XTAL

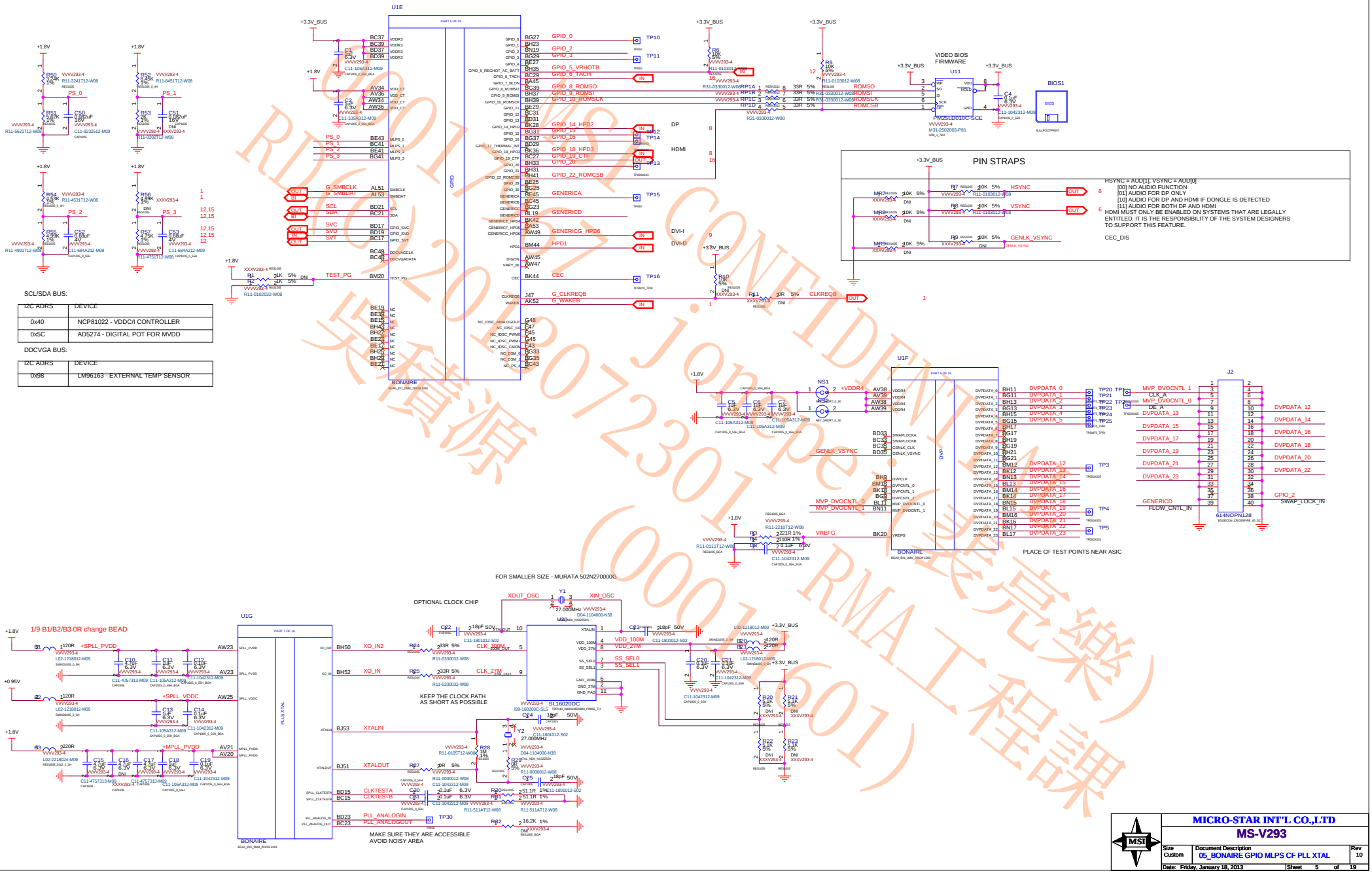

(6) BONAIRE DAC

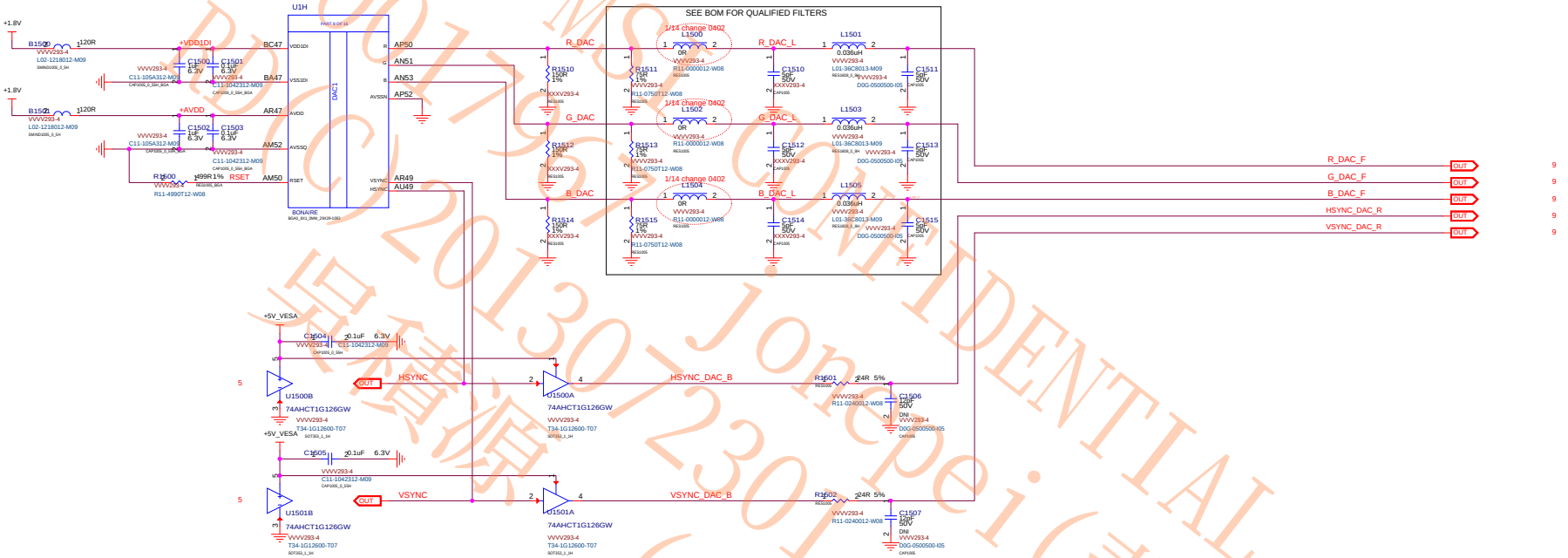

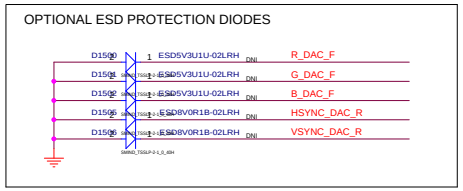

MSI CONFIDENTIAL
Jonepei (裴亮樂)
RMA工程課
(00011601)

MICRO-STAR INT'L CO.,LTD		
MS-V293		
Size: Custom	Document Description: 06_BONAIRE DAC	Rev: 10
Date: Friday, January 18, 2013	Sheet 6 of 19	

(7) BONAIRE TMDPAB dDVI

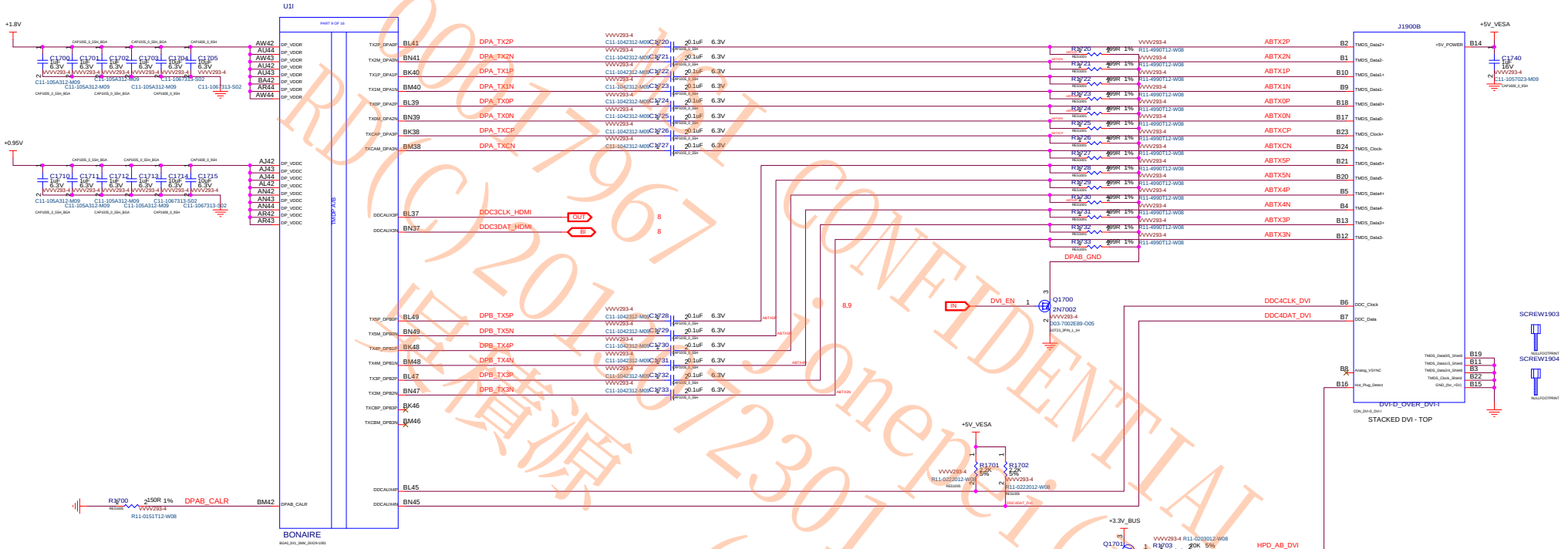

OPTIONAL ESD PROTECTION DIODES

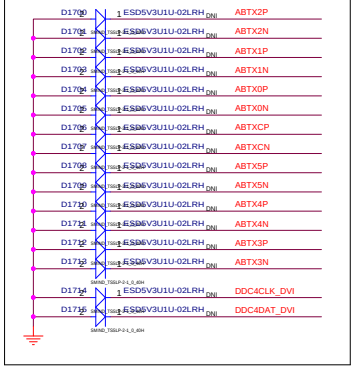

00117967 RUC(2012)2301 Lenovo CONFIDENTIAL 聯寶源(00011601) RMA工程課 (未完樂)

MICRO-STAR INT'L CO.,LTD		
MS-V293		
Size: Custom	Document Description: 07_BONAIRE TMDPAB dDVI	Rev: 10
Date: Friday, January 18, 2013	Sheet 7 of 19	

(8) BONAIRE TMDPCD DP HDMI

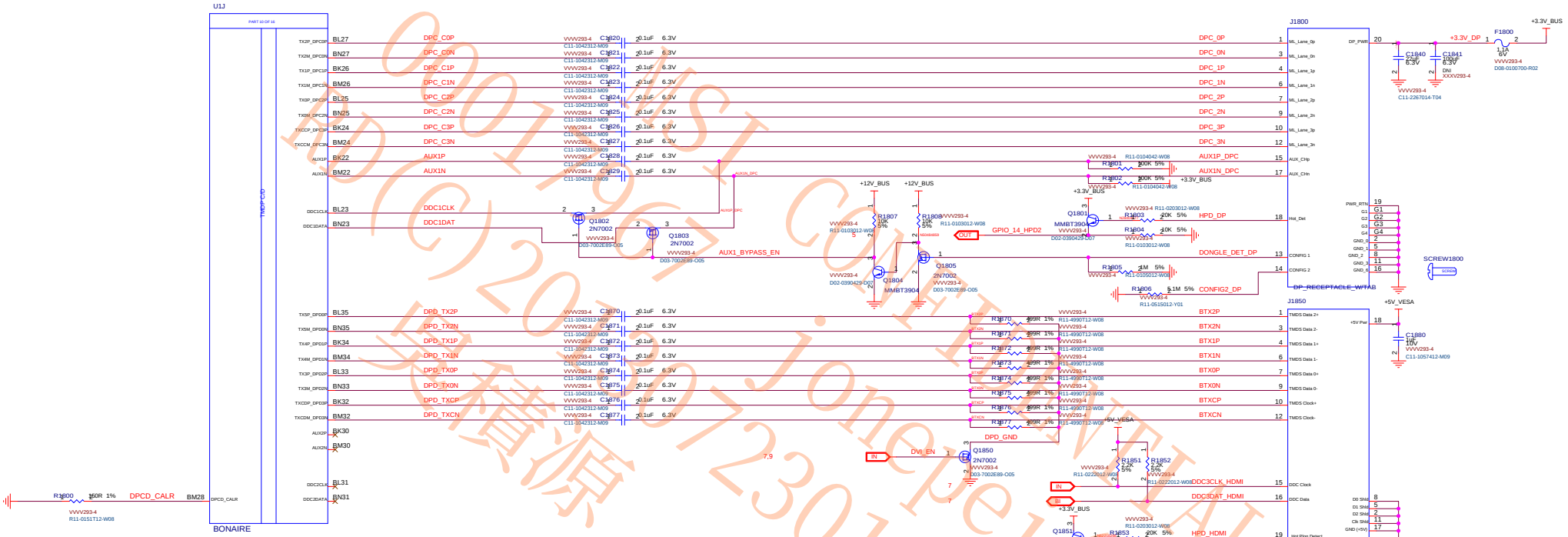

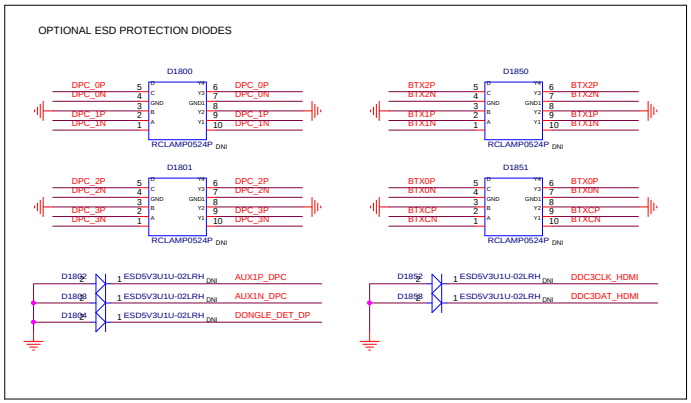

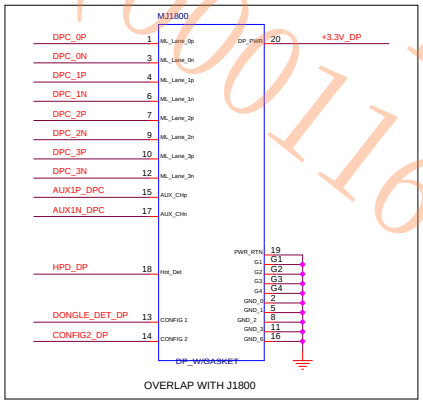

MICRO-STAR INT'L CO.,LTD		
MS-V293		
Size: Custom	Document Description: 08_BONAIRE TMDPCD DP HDMI	Rev: 10
Date: Friday, January 18, 2013	Sheet 8 of 19	

(9) BONAIRE TMDPEF dDVI

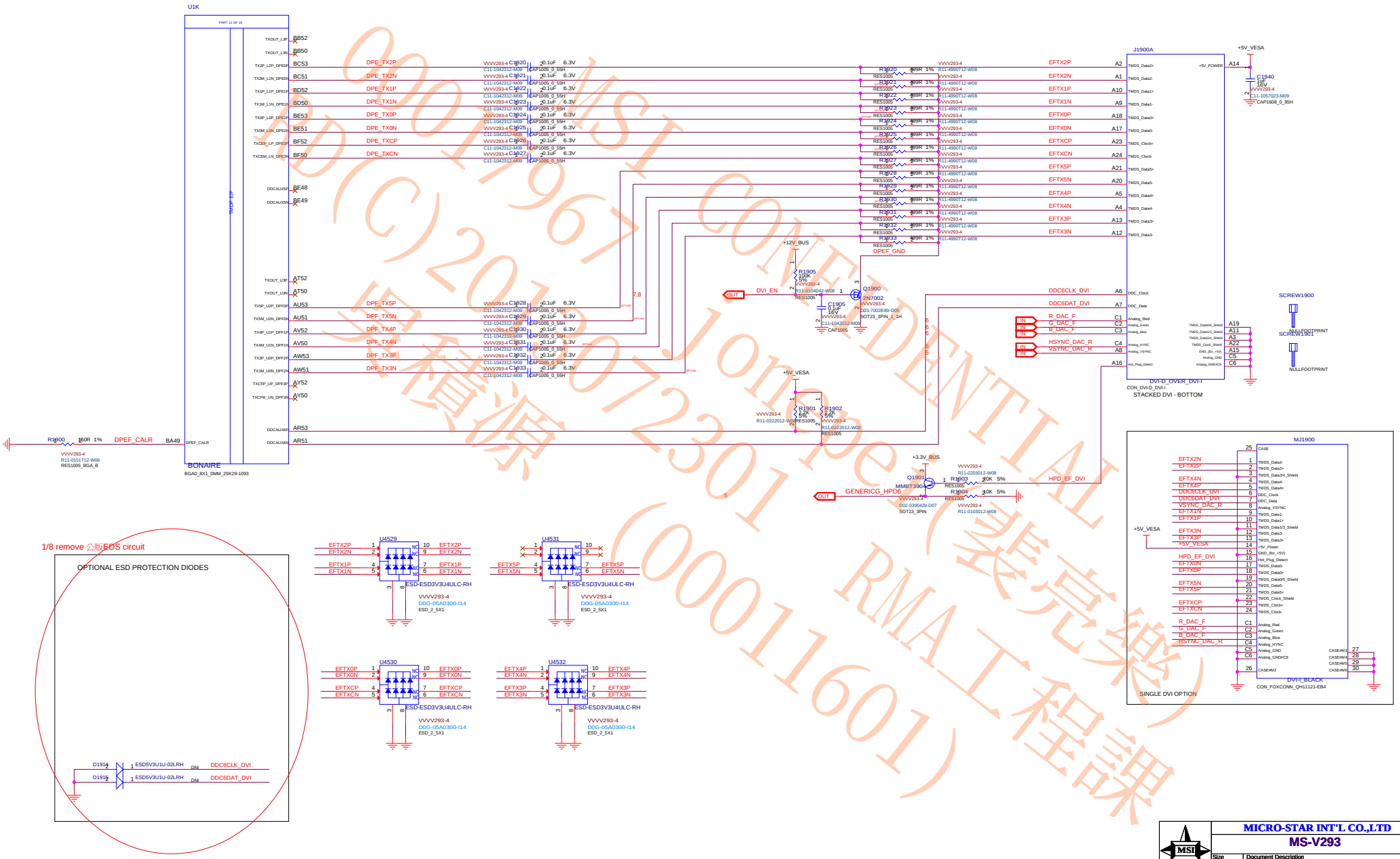

MSI CONFIDENTIAL
(C) 2012 Jonpe (裝完準)
(00011601)
MSI 工程課

MICRO-STAR INT'L CO.,LTD		
MS-V293		
Size: Custom	Document Description: 09_BONAIRE TMDPEF dDVI	Rev: 10
Date: Friday, January 18, 2013	Sheet 9 of 19	

(10) BONAIRE POWER AND GROUND

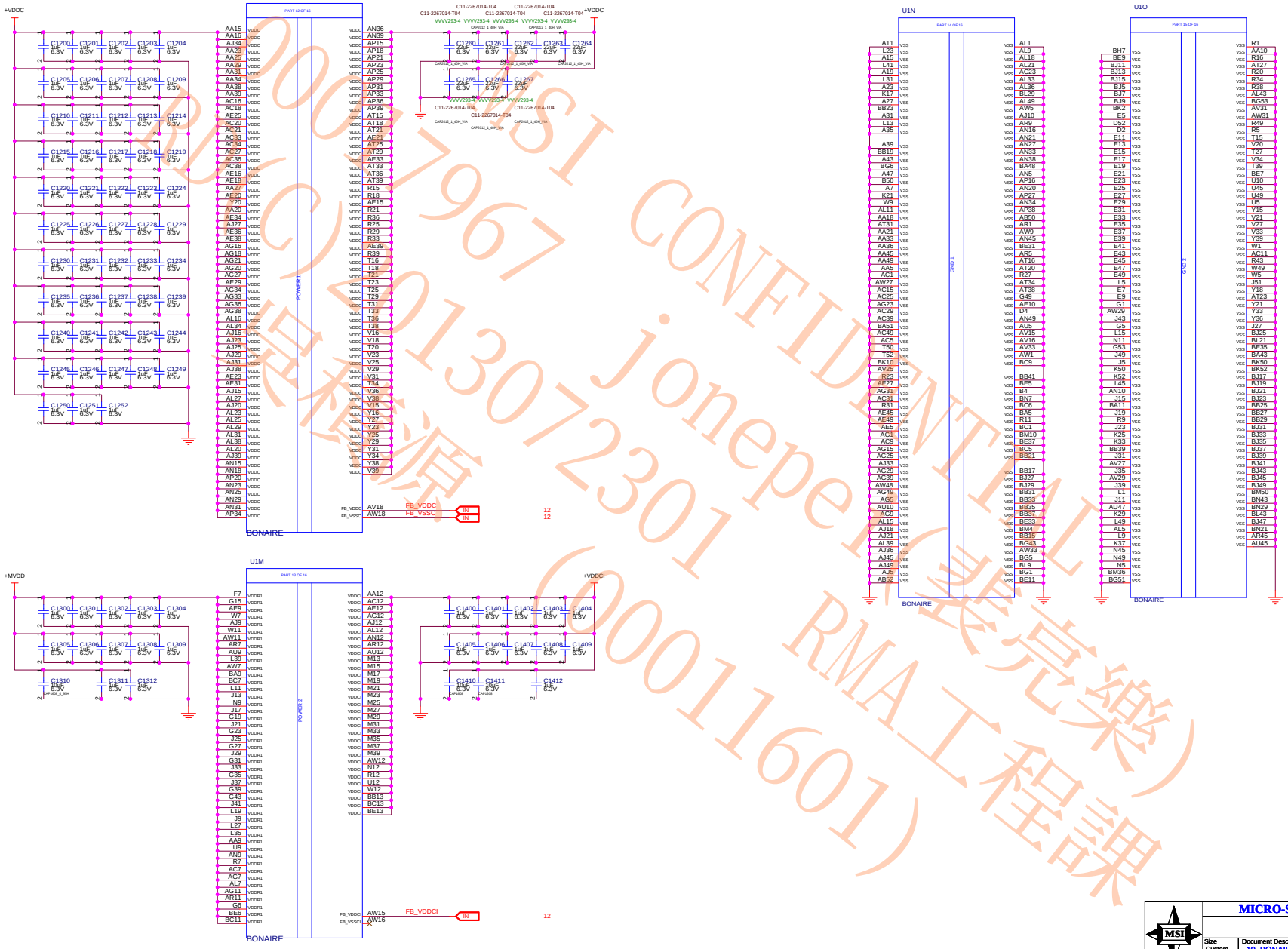

CONFIDENTIAL
(0001160 1)

MICRO-STAR INT'L CO.,LTD		
MS-V293		
Size: Custom	Document Description: 10_BONAIRE POWER AND GROUND	Rev: 10
Date: Friday, January 18, 2013	Sheet 10 of 19	

(11) VDDC_VDDCI_01

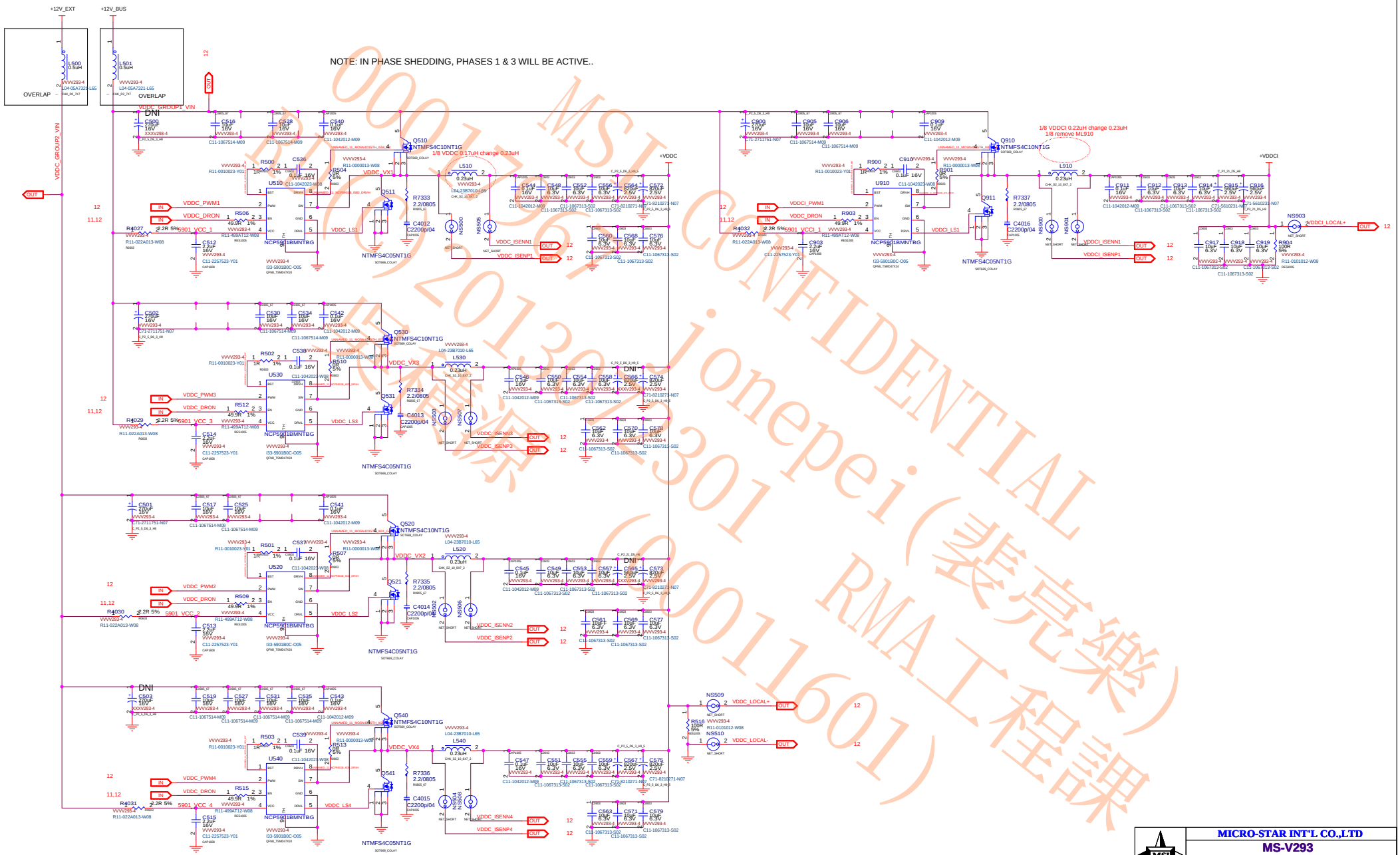

MSI CONFIDENTIAL
(2013/01/30 Jionepei(裝完樂)
(2013/01/30 RMA工程課
(0001601)

MICRO-STAR INT'L CO.,LTD		
MS-V293		
Size: Custom	Document Description: 11_VDDC_VDDCI_01	Rev: 10
Date: Friday, January 18, 2013	Sheet 11 of 19	

(12) VDDC_VDDCI_02

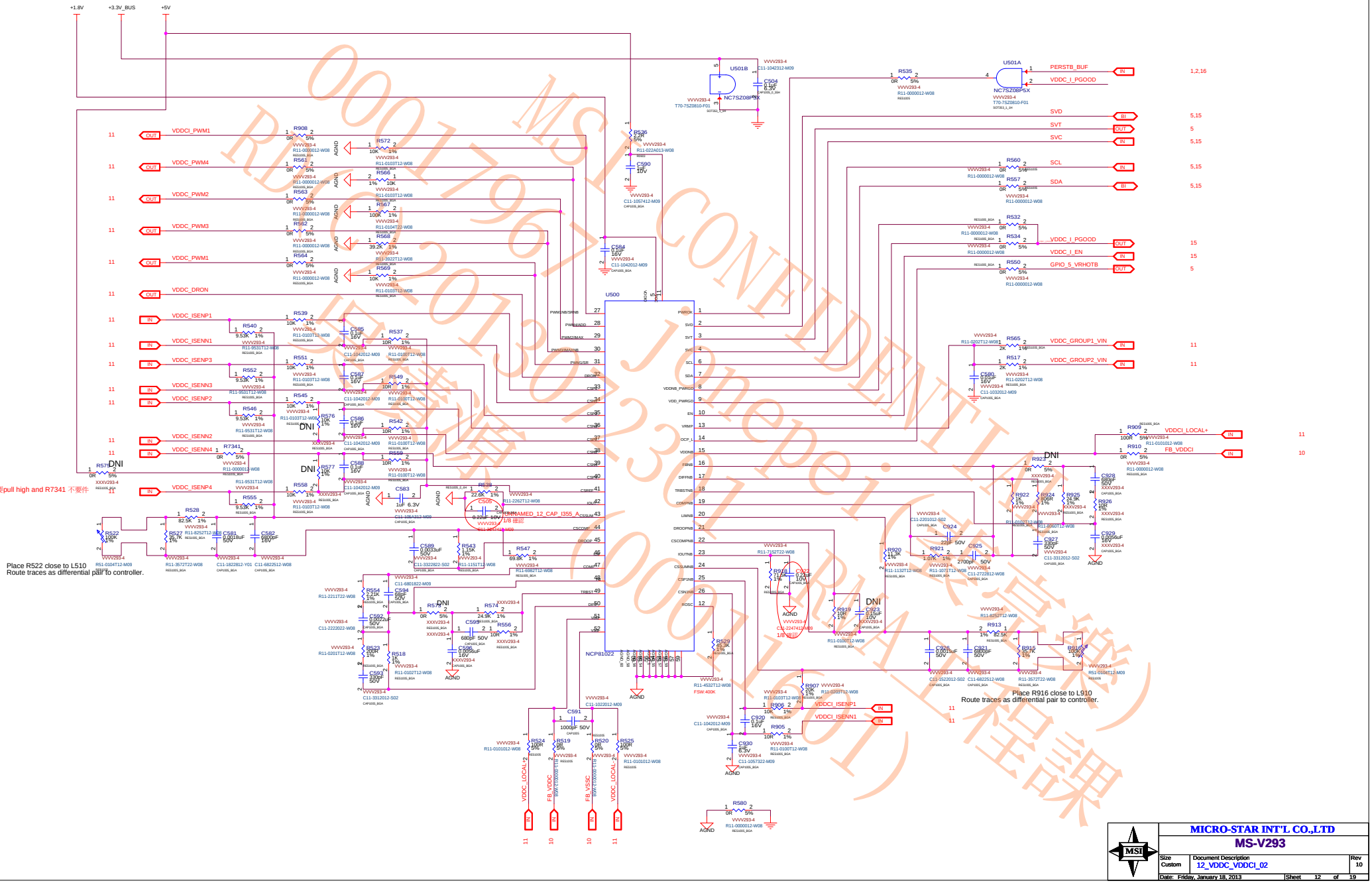

(13) MVDD

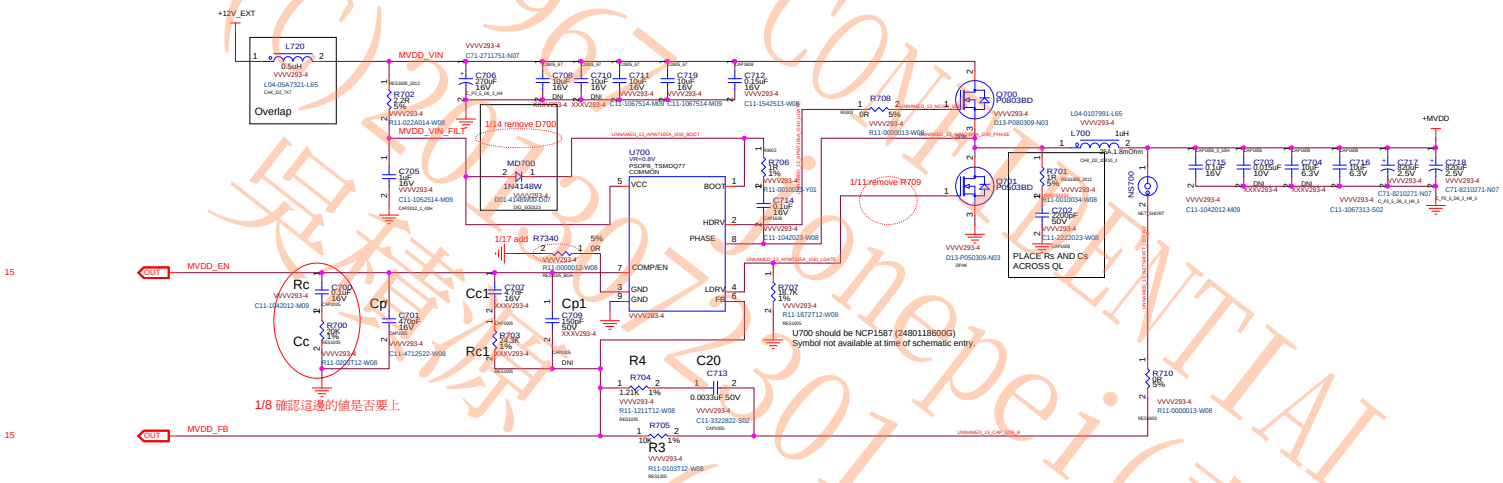

MSI CONFIDENTIAL
RD(C)2013/2/2301 RMA工程課
(00011601)

MICRO-STAR INT'L CO.,LTD		
MS-V293		
Size: Custom	Document Description: 13_MVDD	Rev: 10
Date: Friday, January 18, 2013	Sheet 13 of 19	

(14) SMALL RAIL REGULATORS

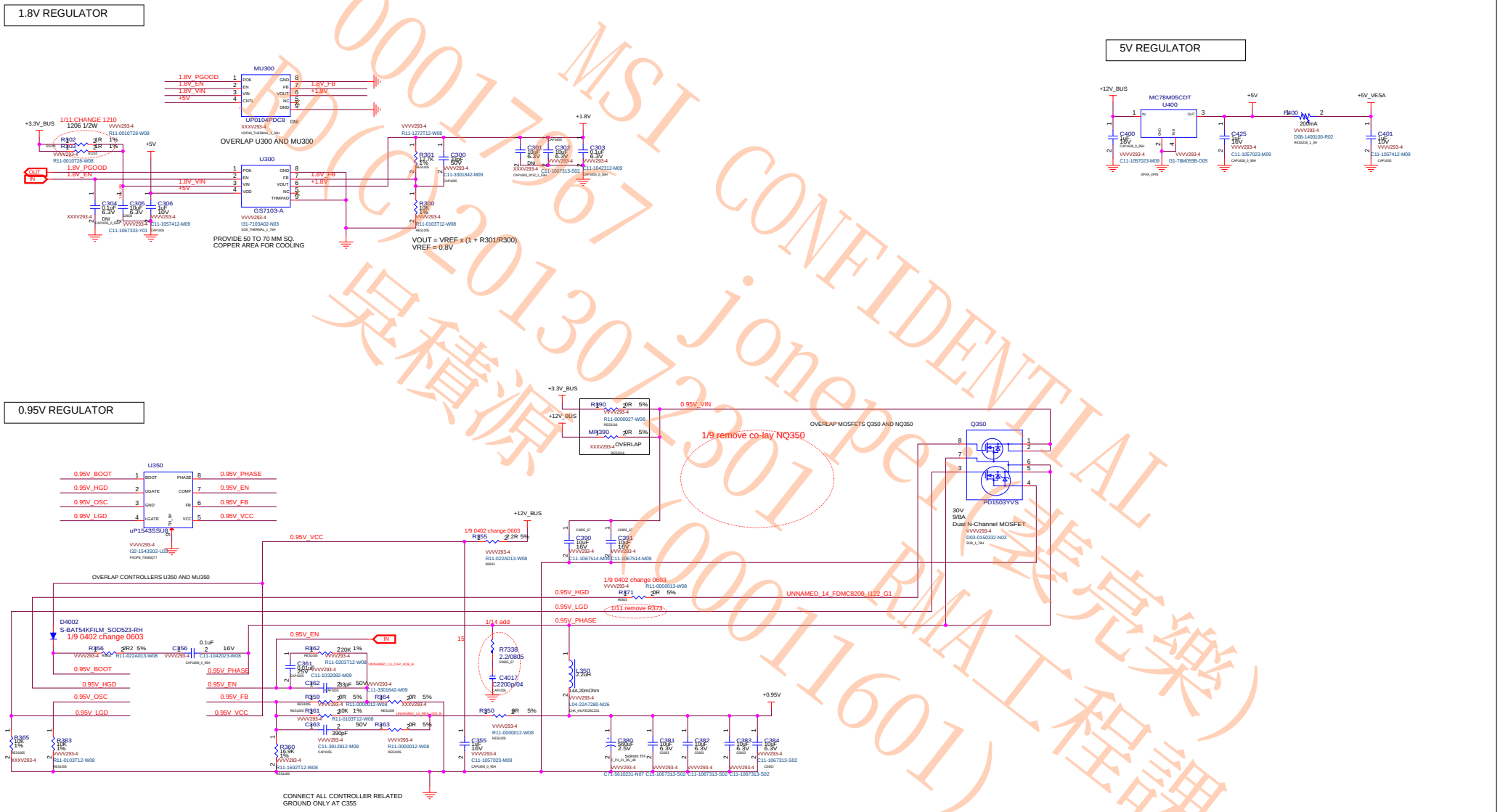

MSI CONFIDENTIAL
jonepe1 (吳亮樂)
RMA工程課
(00011601)
吳積源
00017967
RD(C)-20130723301

MICRO-STAR INT'L CO.,LTD		
MS-V293		
Size: Custom	Document Description: 14_SMALL RAIL REGULATORS	Rev: 10
Date: Friday, January 18, 2013	Sheet 14 of 19	

(15) POWER MANAGEMENT

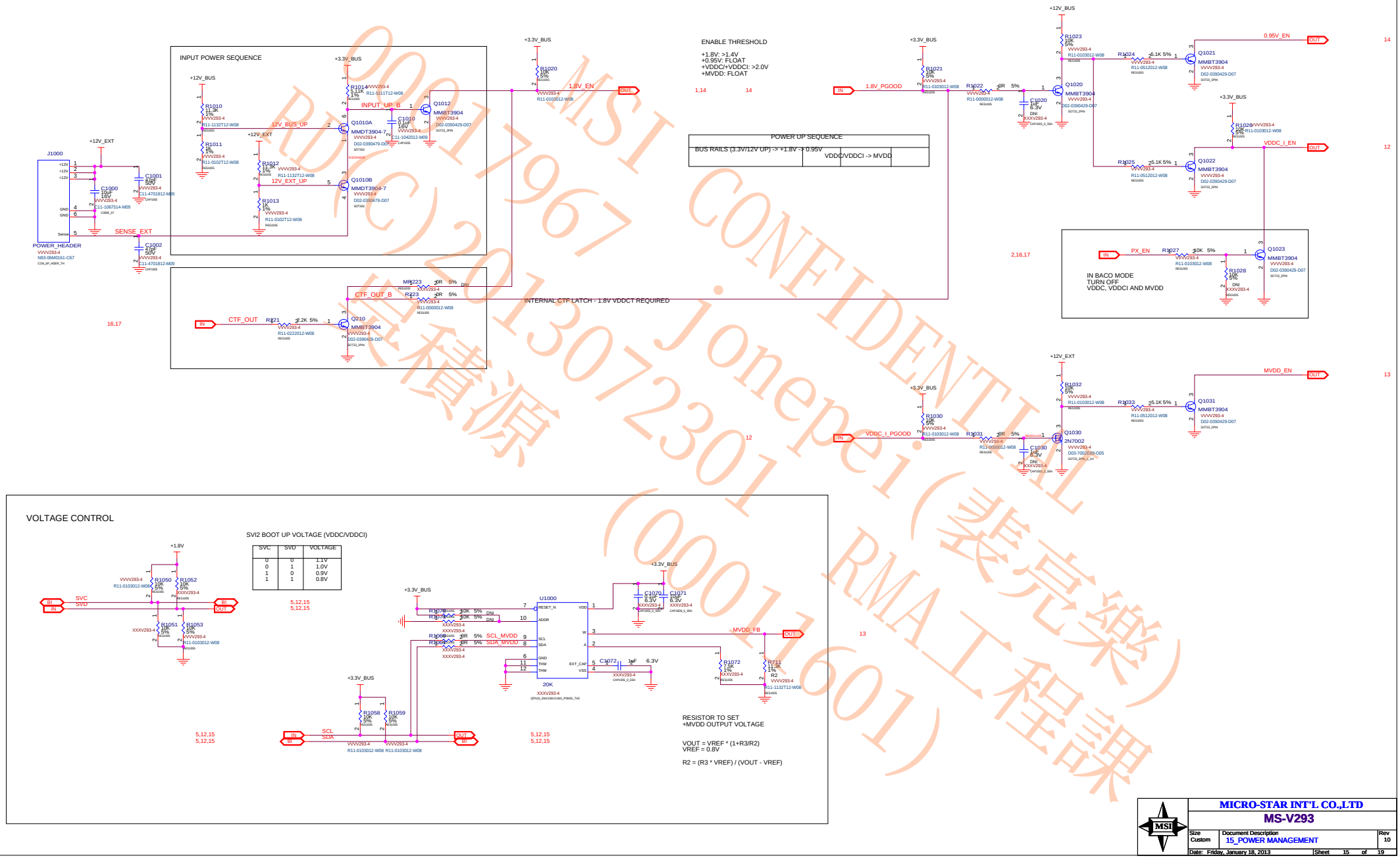

SVC	SVD	VOLTAGE
0	0	1.1V
0	1	1.0V
1	0	0.9V
1	1	0.8V

MSI CONFIDENTIAL
00017967 Jonepei (裴亮樂)
RD(C)20130723011 RMA工程課
(00017601)

MICRO-STAR INT'L CO.,LTD		
MS-V293		
Size: Custom	Document Description: 15_POWER MANAGEMENT	Rev: 10
Date: Friday, January 18, 2013	Sheet 15 of 19	

(16) MECHANICAL AND THERMAL MANAGEMENT

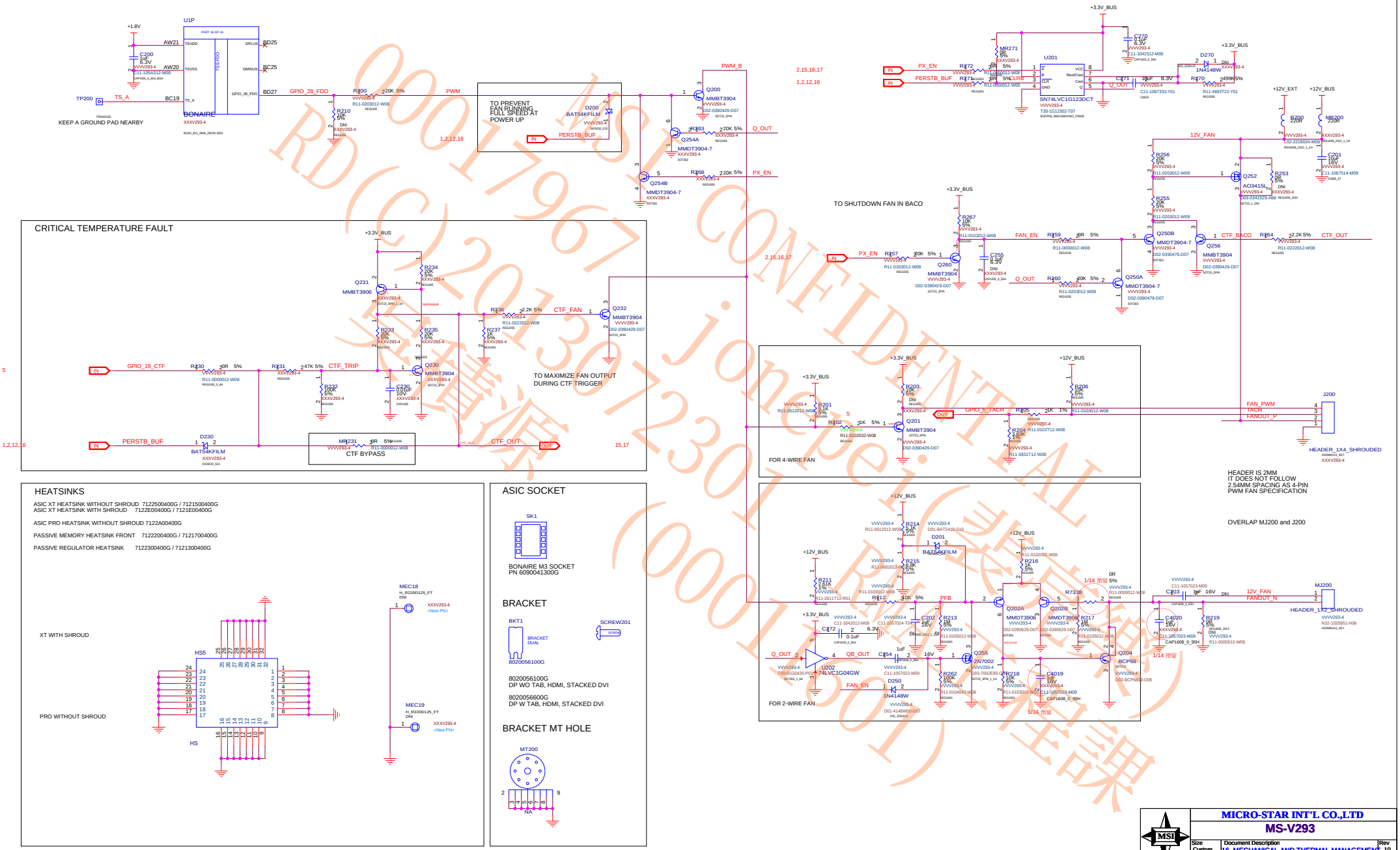

000179671 MSI CONFIDENTIAL
RD (C)20130723011 jonchei (黃建榮)

MICRO-STAR INT'L CO.,LTD		
MS-V293		
Size: Custom	Document Description: 16_MECHANICAL AND THERMAL MANAGEMENT	Rev: 10
Date: Friday, January 18, 2013	Sheet 16 of 19	

(17) DEBUG CIRCUIT

MSI CONFIDENTIAL
Jonepei(致伸)
RMA工程課
00019967
版權所有(C)2013072301
吳積源(06011601)

JTAG

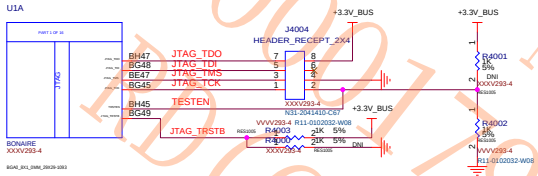

1/10: remove J4001/J4002

LM96163 FOR BACKUP THERMAL CONTROL

1/10: remove U4003 circuit

SWITCHES

1/10: remove SW4002

BYPASS CTF

MAXIMIZE FAN

VTMM - TEST CONNECTOR FOR VOLTAGE MEASUREMENTS

1/10: remove J4010 and J4011

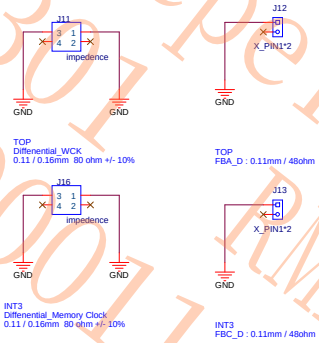

optical cross point

Top & bottom each layer set 4 points

LED LIGHTS

LED RED "ON" INDICATES CTF FAULT

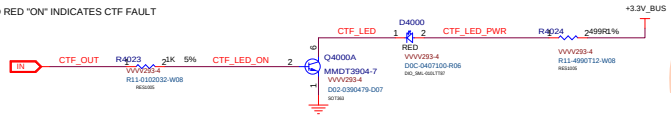

15,16

LED GREEN "ON" INDICATES BACO MODE

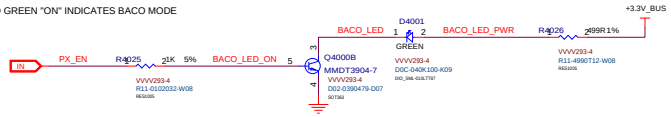

2,15,16

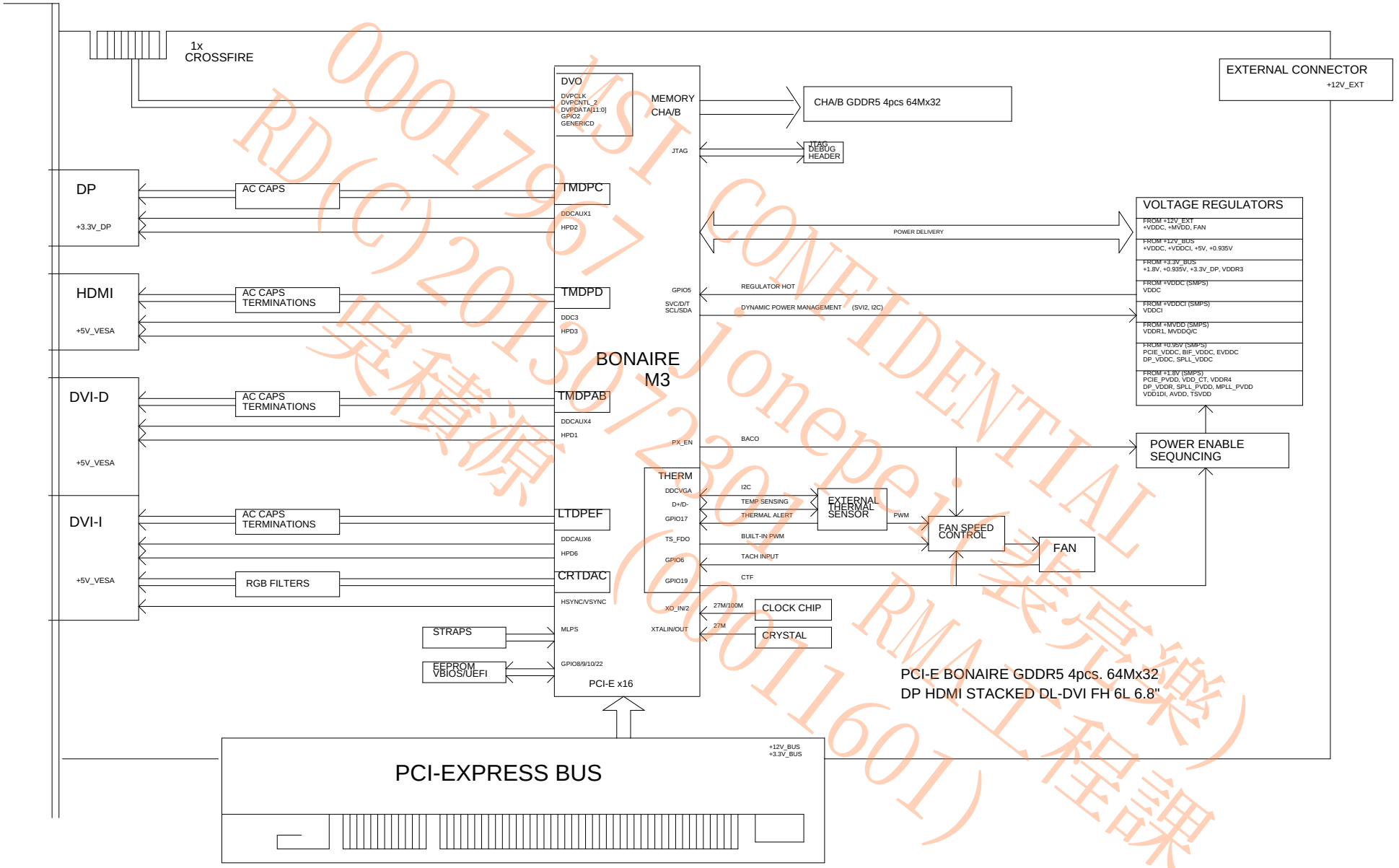

0001796 7
RD(C)2013072 30
(0001601)
MSI CONFIDENTIAL
Jonepe 完整版
RMA工程課

MICRO-STAR INT'L CO.,LTD

MS-V293

Size	Document Description	Rev
Custom	18_BLOCK DIAGRAM	10

Date: Friday, January 18, 2013 Sheet 18 of 19

AMD

TITLE: BONAIRE PRO G5 x32

DOCUMENT NUMBER: 105-C583xx-00C

DATE: Tue Dec 11 22:10:57 2012

SHEET NUMBER: 19 OF 19

REV: 1.0

REVISION HISTORY

ENGINEER: <ENGINEER>

NOTES: NOTE

CONFIDENTIAL AND PROPRIETARY TO ADVANCED MICRO DEVICES INC. C 2012 Advanced Micro Devices
This AMD Board schematic and design is the exclusive property of AMD, and is provided only to entities under a non-disclosure agreement with AMD for evaluation purposes. Further distribution or disclosure is strictly prohibited. Use of this schematic and design for any purpose other than evaluation requires a Board Technology License Agreement with AMD. AMD makes no representations or warranties of any kind regarding this schematic and design, including, not limited to, any implied warranty of merchantability or fitness for a particular purpose, and disclaims responsibility for any consequences resulting from use of the information included herein.

AMD - GRAPHICS
1 COMMERCE VALLEY
MARKHAM, ONTARIO, L3T 7X6

SCH Rev	PCB Rev	Date	REVISION DESCRIPTON
	0	08/27/2012	INITIAL DESIGN

MSI CONFIDENTIAL
00017967 jonepei(裴宗樂)
RD(C)20130723O1 RMA工程課
吳積源 (00011601)

MICRO-STAR INT'L CO.,LTD
MS-V293

Size	Document Description	Rev
Custom	19_REVISION HISTORY	10

Date: Friday, January 18, 2013 Sheet 19 of 19

8 7 6 5 4 3 2 1

D C B A