DACA (SOUTH DVI-I)

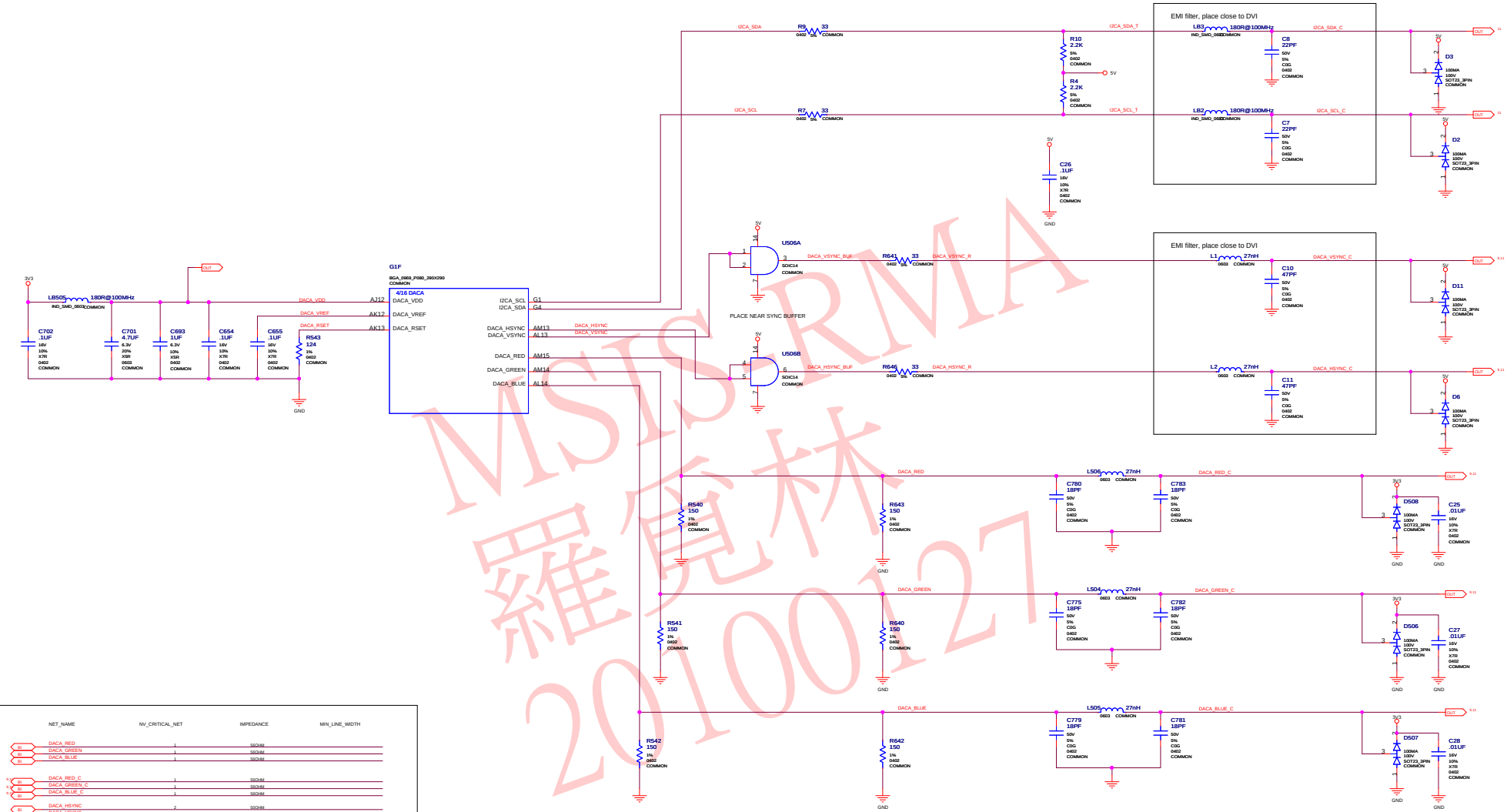

NET_NAME	NV_CRITICAL_NET	IMPEDANCE	MIN_LINE_WIDTH
DACA_RED	1	50OHM	
DACA_GREEN	1	50OHM	
DACA_BLUE	1	50OHM	
DACA_RED_C	1	50OHM	
DACA_GREEN_C	1	50OHM	
DACA_BLUE_C	1	50OHM	
DACA_HSYNC	2	50OHM	
DACA_VSYNC	2	50OHM	
DACA_HSYNC_R	2	50OHM	
DACA_VSYNC_R	2	50OHM	
DACA_VSYNC_BUF	2	50OHM	
DACA_HSYNC_BUF	2	50OHM	
DACA_VSYNC_C	2	50OHM	
DACA_HSYNC_C	2	50OHM	

MSI RMA
羅貴林
20100127

ASSEMBLY	BASE LEVEL GENERIC SCHEMATIC ONLY, COMMON & NO_STUFF ASSEMBLY NOTES AND BOM NOT FINAL
PAGE DETAIL	DACA (SOUTH DVI-I)

ALL NVIDIA DESIGN SPECIFICATIONS, REFERENCE SPECIFICATIONS, REFERENCE BOARDS, FILES, DRAWINGS, DIAGNOSTICS, LISTS AND OTHER DOCUMENTS OR INFORMATION (TOGETHER AND SEPARATELY, 'MATERIALS') ARE BEING PROVIDED 'AS IS'. THE MATERIALS MAY CONTAIN KNOWN AND UNKNOWN VIOLATIONS OR DEVIATIONS OF INDUSTRY STANDARDS AND SPECIFICATIONS. NVIDIA MAKES NO WARRANTIES, EXPRESSED, IMPLIED, STATUTORY OR OTHERWISE WITH RESPECT TO THE MATERIALS OR OTHERWISE, AND EXPRESSLY DISCLAIMS ALL IMPLIED WARRANTIES INCLUDING, WITHOUT LIMITATION, THE WARRANTIES OF DESIGN, OF NONINFRINGEMENT, MERCHANTABILITY OR FITNESS FOR A PARTICULAR PURPOSE, OR ARISING FROM A COURSE OF DEALING, TRADE USAGE, TRADE PRACTICE, OR INDUSTRY STANDARDS.

NVIDIA CORPORATION
2701 SAN TOMAS EXPRESSWAY
SANTA CLARA, CA 95050, USA

NV_PN	600-10681-base-100 A		
ID		PAGE	
NAME		DATE	05-FEB-2009

FBC DECOUPLING CAPS & NVVDD DECOUPLING CAPS

Decoupling for FBC 0..15

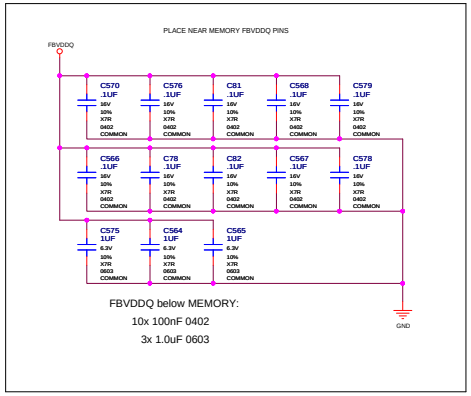

Decoupling for FBC 16..31

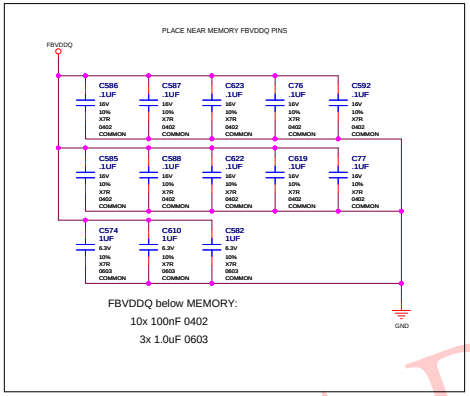

Decoupling for FBC 32..47

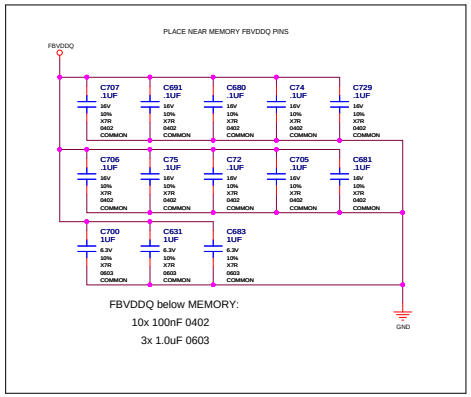

Decoupling for FBC 48..63

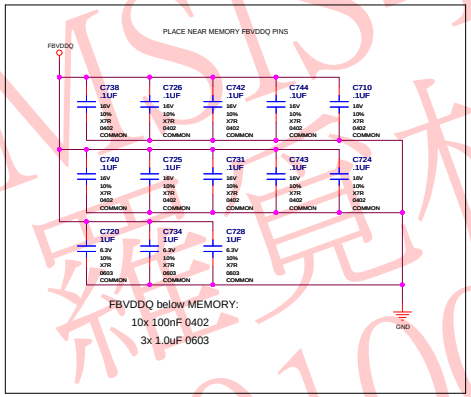

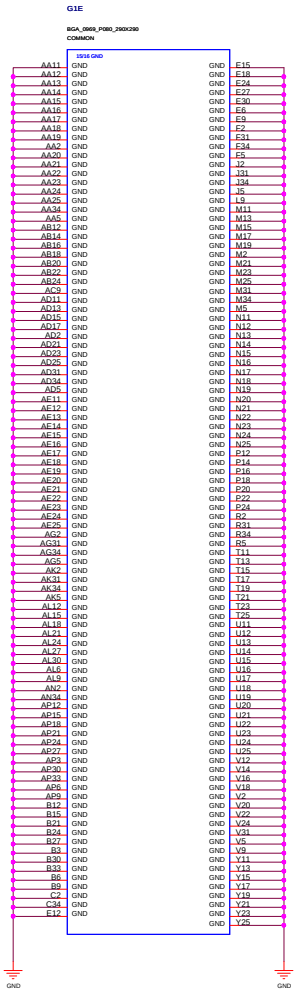

NVIDIA-RMA 羅昌林 20100127

ASSEMBLY	BASE LEVEL GENERIC SCHEMATIC ONLY, COMMON & NO_STUFF ASSEMBLY NOTES AND BOM NOT FINAL
PAGE DETAIL	FBC DECOUPLING CAPS

ALL NVIDIA DESIGN SPECIFICATIONS, REFERENCE SPECIFICATIONS, REFERENCE BOARDS, FILES, DRAWINGS, DIAGNOSTICS, LISTS AND OTHER DOCUMENTS OR INFORMATION (TOGETHER AND SEPARATELY, 'MATERIALS') ARE BEING PROVIDED 'AS IS'. THE MATERIALS MAY CONTAIN KNOWN AND UNKNOWN VIOLATIONS OR DEVIATIONS OF INDUSTRY STANDARDS AND SPECIFICATIONS. NVIDIA MAKES NO WARRANTIES, EXPRESSED, IMPLIED, STATUTORY OR OTHERWISE WITH RESPECT TO THE MATERIALS OR OTHERWISE, AND EXPRESSLY DISCLAIMS ALL IMPLIED WARRANTIES INCLUDING, WITHOUT LIMITATION, THE WARRANTIES OF DESIGN, OF NONINFRINGEMENT, MERCHANTABILITY OR FITNESS FOR A PARTICULAR PURPOSE, OR ARISING FROM A COURSE OF DEALING, TRADE USAGE, TRADE PRACTICE, OR INDUSTRY STANDARDS.

NVIDIA CORPORATION
2701 SAN TOMAS EXPRESSWAY
SANTA CLARA, CA 95050, USA

NV_PN	600-10681-base-100 A		
ID		PAGE	
NAME		DATE	05-FEB-2009

PARTITION C MOMERIES

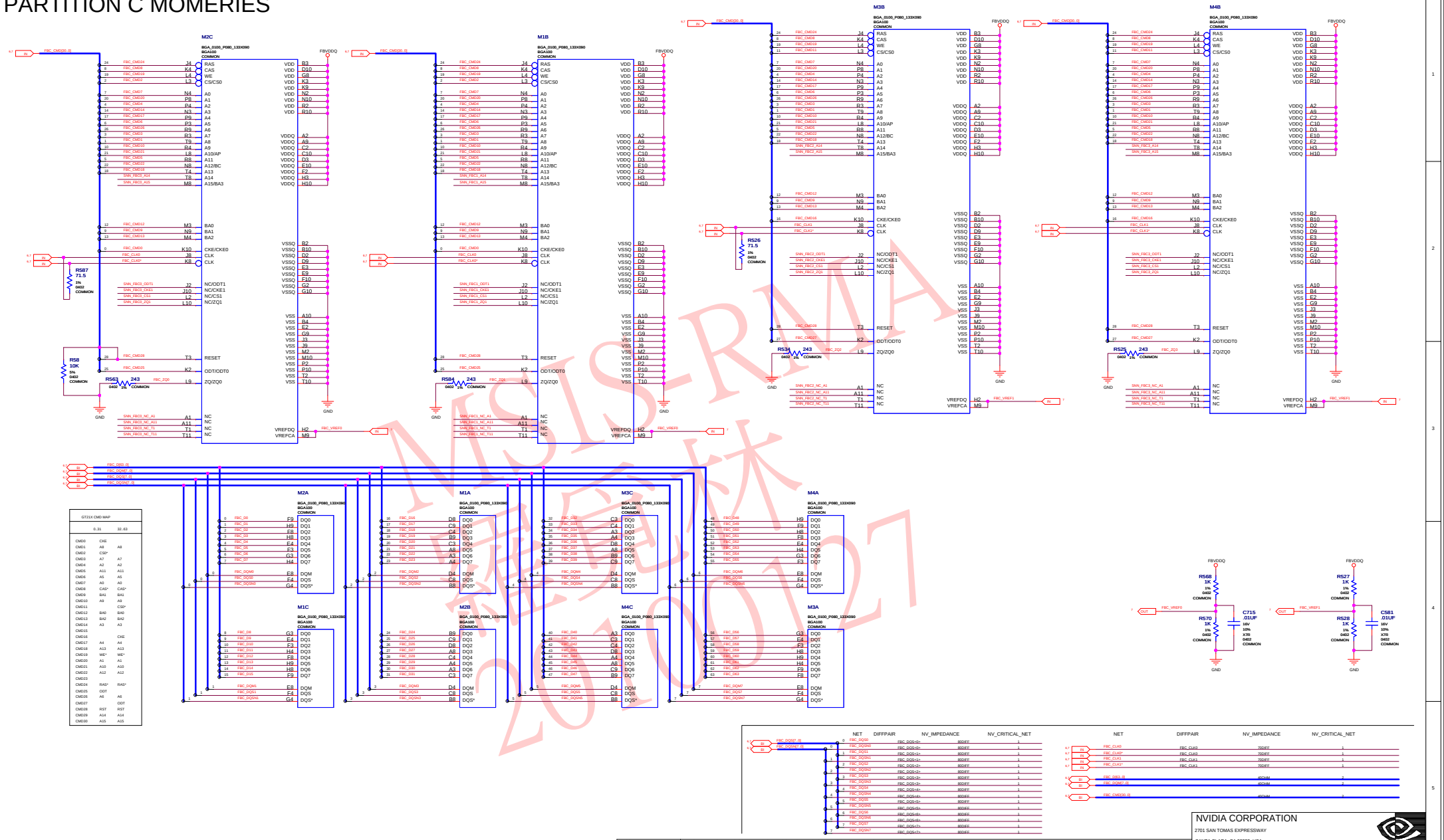

GT21X CMD MAP

	0.31	32.63
CMD0	CKE	
CMD1	A8	A8
CMD2	CS0*	
CMD3	A7	A7
CMD4	A2	A2
CMD5	A11	A11
CMD6	A5	A5
CMD7	A0	A0
CMD8	CAS*	CAS*
CMD9	BA1	BA1
CMD10	A9	A9
CMD11		CS0*
CMD12	BA0	BA0
CMD13	BA2	BA2
CMD14	A3	A3
CMD15		
CMD16		CKE
CMD17	A4	A4
CMD18	A13	A13
CMD19	WE*	WE*
CMD20	A1	A1
CMD21	A10	A10
CMD22	A12	A12
CMD23		
CMD24	RAS*	RAS*
CMD25	ODT	
CMD26	A6	A6
CMD27		ODT
CMD28	RST	RST
CMD29	A14	A14
CMD30	A15	A15

MSISRMA 程宜林 2010/12

ASSEMBLY	BASE LEVEL GENERIC SCHEMATIC ONLY, COMMON & NO_STUFF ASSEMBLY NOTES AND BOM NOT FINAL
PAGE DETAIL	PARTITION C MEMORIES

ALL NVIDIA DESIGN SPECIFICATIONS, REFERENCE SPECIFICATIONS, REFERENCE BOARDS, FILES, DRAWINGS, DIAGNOSTICS, LISTS AND OTHER DOCUMENTS OR INFORMATION (TOGETHER AND SEPARATELY, 'MATERIALS') ARE BEING PROVIDED 'AS IS'. THE MATERIALS MAY CONTAIN KNOWN AND UNKNOWN VIOLATIONS OR DEVIATIONS OF INDUSTRY STANDARDS AND SPECIFICATIONS. NVIDIA MAKES NO WARRANTIES, EXPRESSED, IMPLIED, STATUTORY OR OTHERWISE WITH RESPECT TO THE MATERIALS OR OTHERWISE, AND EXPRESSLY DISCLAIMS ALL IMPLIED WARRANTIES INCLUDING, WITHOUT LIMITATION, THE WARRANTIES OF DESIGN, OF NONINFRINGEMENT, MERCHANTABILITY OR FITNESS FOR A PARTICULAR PURPOSE, OR ARISING FROM A COURSE OF DEALING, TRADE USAGE, TRADE PRACTICE, OR INDUSTRY STANDARDS.

NVIDIA CORPORATION
2701 SAN TOMAS EXPRESSWAY
SANTA CLARA, CA 95050, USA

NV_PN	600-10681-base-100 A		
ID		PAGE	
NAME		DATE	05-FEB-2009

PARTITION C FRAME BUFFER INTERFACE

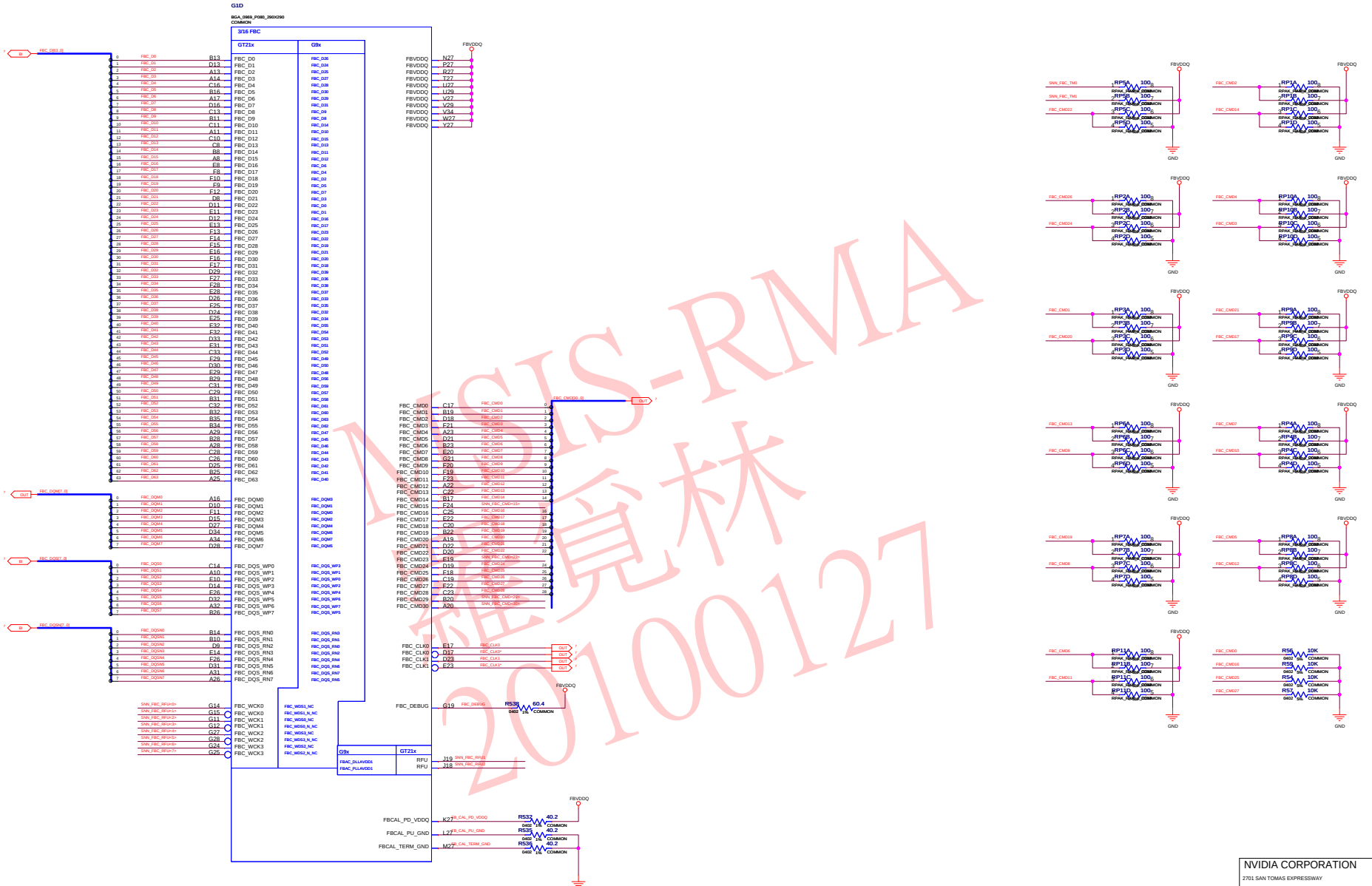

NSIS-RMA 雅宜林 20100127

ASSEMBLY	BASE LEVEL GENERIC SCHEMATIC ONLY, COMMON & NO_STUFF ASSEMBLY NOTES AND BOM NOT FINAL
PAGE DETAIL	PARTITION C FRAME BUFFER INTERFACE

ALL NVIDIA DESIGN SPECIFICATIONS, REFERENCE SPECIFICATIONS, REFERENCE BOARDS, FILES, DRAWINGS, DIAGNOSTICS, LISTS AND OTHER DOCUMENTS OR INFORMATION (TOGETHER AND SEPARATELY, 'MATERIALS') ARE BEING PROVIDED 'AS IS'. THE MATERIALS MAY CONTAIN KNOWN AND UNKNOWN VIOLATIONS OR DEVIATIONS OF INDUSTRY STANDARDS AND SPECIFICATIONS. NVIDIA MAKES NO WARRANTIES, EXPRESSED, IMPLIED, STATUTORY OR OTHERWISE WITH RESPECT TO THE MATERIALS OR OTHERWISE, AND EXPRESSLY DISCLAIMS ALL IMPLIED WARRANTIES INCLUDING, WITHOUT LIMITATION, THE WARRANTIES OF DESIGN, OF NONINFRINGEMENT, MERCHANTABILITY OR FITNESS FOR A PARTICULAR PURPOSE, OR ARISING FROM A COURSE OF DEALING, TRADE USAGE, TRADE PRACTICE, OR INDUSTRY STANDARDS.

NVIDIA CORPORATION
2701 SAN TOMAS EXPRESSWAY
SANTA CLARA, CA 95050, USA

NV_PN	600-10681-base-100 A		
ID		PAGE	
NAME		DATE	05-FEB-2009

FBA DECOUPLING CAPS & NVVDD DECOUPLING CAPS

Decoupling for FBA 0..15

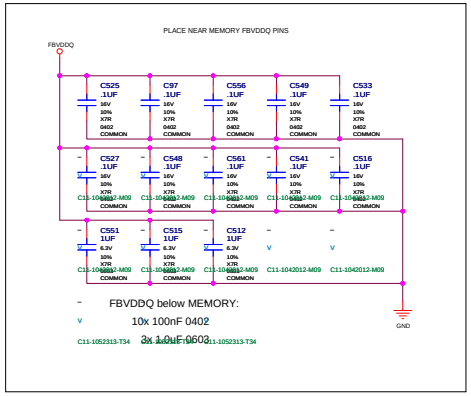

Decoupling for FBA 16..31

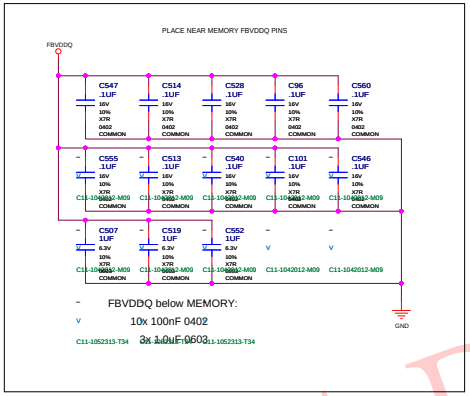

Decoupling for FBA 32..47

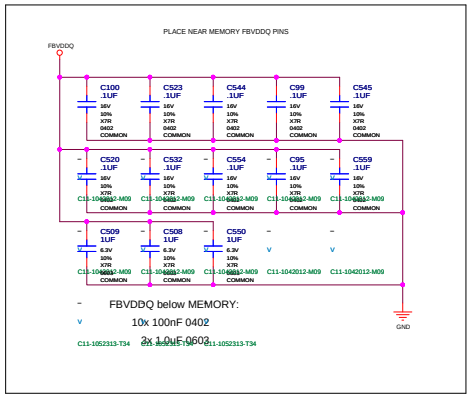

Decoupling for FBA 48..63

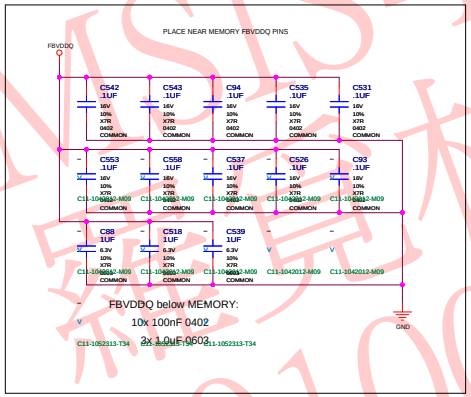

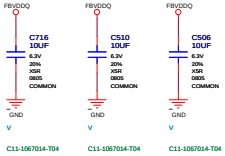

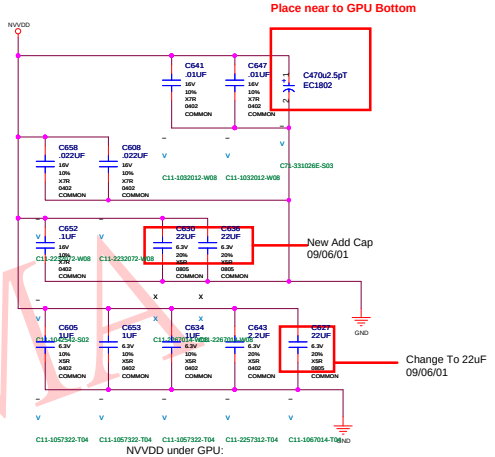

NVVDD under GPU:

4x 0.01uF 0402 X7R
5x 0.022uF 0402 X7R
2x 0.047uF 0402 X7R
1x 0.1uF 0402 X7R
1x 0.22uF 0402 X7R
4x 1.0uF 0402 X5R
1x 2.2uF 0402 X5R
2x 10uF 0805 X5R

Decoupling for EMI

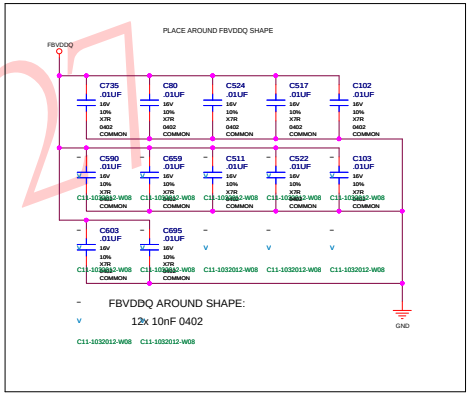

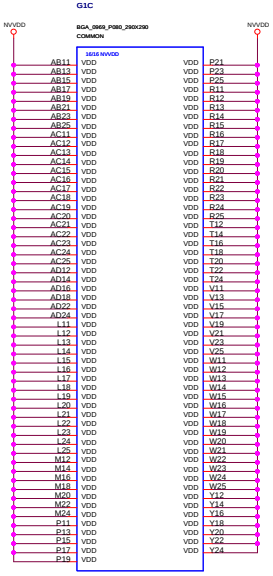

NVIDIA-RMA 20100127 鑫昌林

ASSEMBLY	BASE LEVEL GENERIC SCHEMATIC ONLY, COMMON & NO_STUFF ASSEMBLY NOTES AND BOM NOT FINAL
PAGE DETAIL	FBA DECOUPLING CAPS & NVVDD DECOUPLING CAPS

ALL NVIDIA DESIGN SPECIFICATIONS, REFERENCE SPECIFICATIONS, REFERENCE BOARDS, FILES, DRAWINGS, DIAGNOSTICS, LISTS AND OTHER DOCUMENTS OR INFORMATION (TOGETHER AND SEPARATELY, 'MATERIALS') ARE BEING PROVIDED 'AS IS'. THE MATERIALS MAY CONTAIN KNOWN AND UNKNOWN VIOLATIONS OR DEVIATIONS OF INDUSTRY STANDARDS AND SPECIFICATIONS. NVIDIA MAKES NO WARRANTIES, EXPRESSED, IMPLIED, STATUTORY OR OTHERWISE WITH RESPECT TO THE MATERIALS OR OTHERWISE, AND EXPRESSLY DISCLAIMS ALL IMPLIED WARRANTIES INCLUDING, WITHOUT LIMITATION, THE WARRANTIES OF DESIGN, OF NONINFRINGEMENT, MERCHANTABILITY OR FITNESS FOR A PARTICULAR PURPOSE, OR ARISING FROM A COURSE OF DEALING, TRADE USAGE, TRADE PRACTICE, OR INDUSTRY STANDARDS.

NVIDIA CORPORATION
2701 SAN TOMAS EXPRESSWAY
SANTA CLARA, CA 95050, USA

NV_PN	600-10681-base-100 A		
ID		PAGE	
NAME	0650372215-M08	DATE	05-FEB-2009

PARTITION A MOMERIES

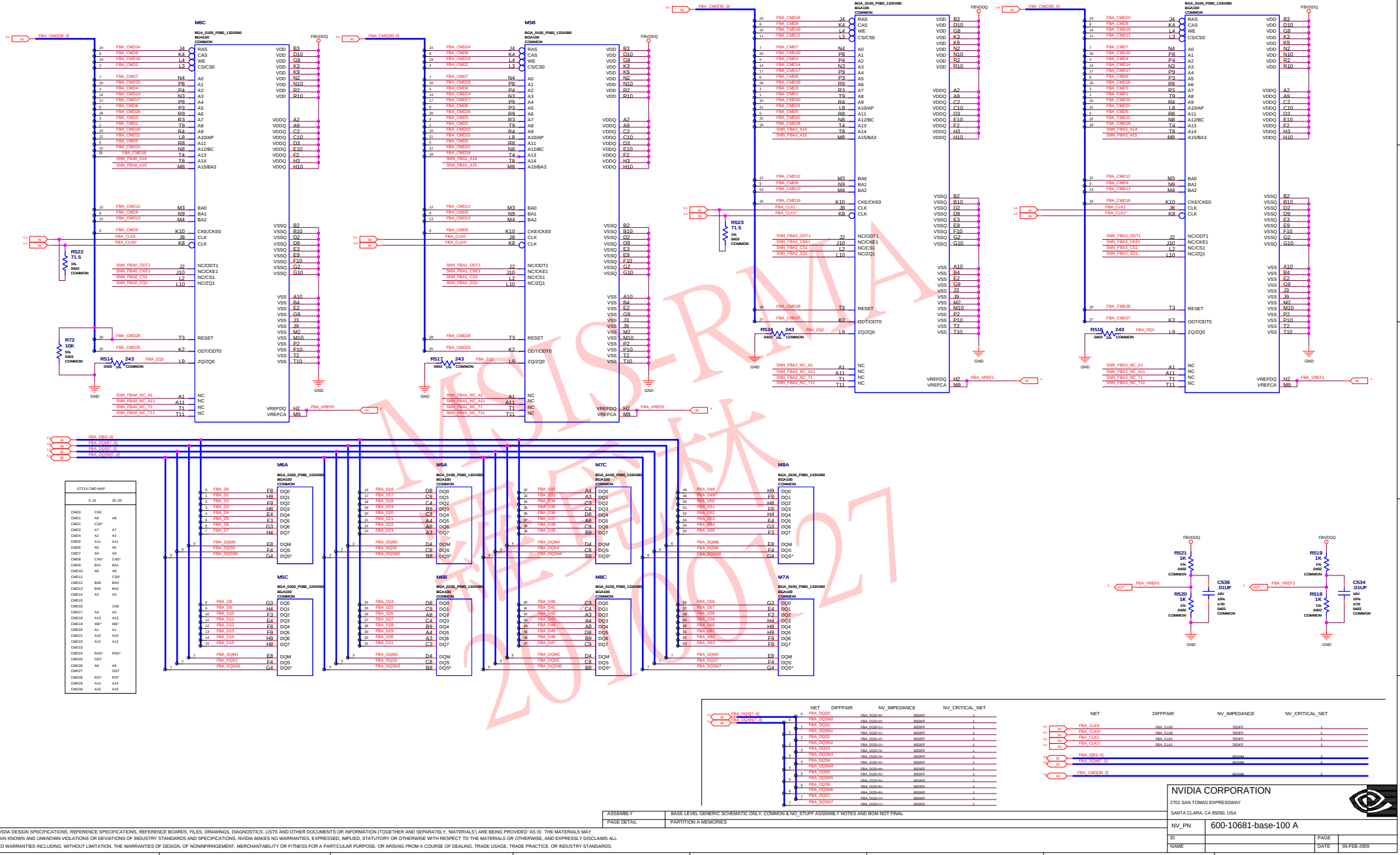

GT21X CMD MAP

	0..31	32..63
CMD0	CKE	
CMD1	A8	A8
CMD2	CS0*	
CMD3	A7	A7
CMD4	A2	A2
CMD5	A11	A11
CMD6	A5	A5
CMD7	A0	A0
CMD8	CAS*	CAS*
CMD9	BA1	BA1
CMD10	A9	A9
CMD11		CS0*
CMD12	BA0	BA0
CMD13	BA2	BA2
CMD14	A3	A3
CMD15		
CMD16		CKE
CMD17	A4	A4
CMD18	A13	A13
CMD19	WE*	WE*
CMD20	A1	A1
CMD21	A10	A10
CMD22	A12	A12
CMD23		
CMD24	RAS*	RAS*
CMD25	ODT	
CMD26	A6	A6
CMD27		ODT
CMD28	RST	RST
CMD29	A14	A14
CMD30	A15	A15

MSISRMA 程序林 20100127

ASSEMBLY	BASE LEVEL GENERIC SCHEMATIC ONLY, COMMON & NO_STUFF ASSEMBLY NOTES AND BOM NOT FINAL
PAGE DETAIL	PARTITION A MEMORIES

ALL NVIDIA DESIGN SPECIFICATIONS, REFERENCE SPECIFICATIONS, REFERENCE BOARDS, FILES, DRAWINGS, DIAGNOSTICS, LISTS AND OTHER DOCUMENTS OR INFORMATION (TOGETHER AND SEPARATELY, 'MATERIALS') ARE BEING PROVIDED 'AS IS'. THE MATERIALS MAY CONTAIN KNOWN AND UNKNOWN VIOLATIONS OR DEVIATIONS OF INDUSTRY STANDARDS AND SPECIFICATIONS. NVIDIA MAKES NO WARRANTIES, EXPRESSED, IMPLIED, STATUTORY OR OTHERWISE WITH RESPECT TO THE MATERIALS OR OTHERWISE, AND EXPRESSLY DISCLAIMS ALL IMPLIED WARRANTIES INCLUDING, WITHOUT LIMITATION, THE WARRANTIES OF DESIGN, OF NONINFRINGEMENT, MERCHANTABILITY OR FITNESS FOR A PARTICULAR PURPOSE, OR ARISING FROM A COURSE OF DEALING, TRADE USAGE, TRADE PRACTICE, OR INDUSTRY STANDARDS.

NVIDIA CORPORATION
2701 SAN TOMAS EXPRESSWAY
SANTA CLARA, CA 95050, USA

NV_PN	600-10681-base-100 A		
ID		PAGE	
NAME		DATE	05-FEB-2009

PARTITION A FRAME BUFFER INTERFACE

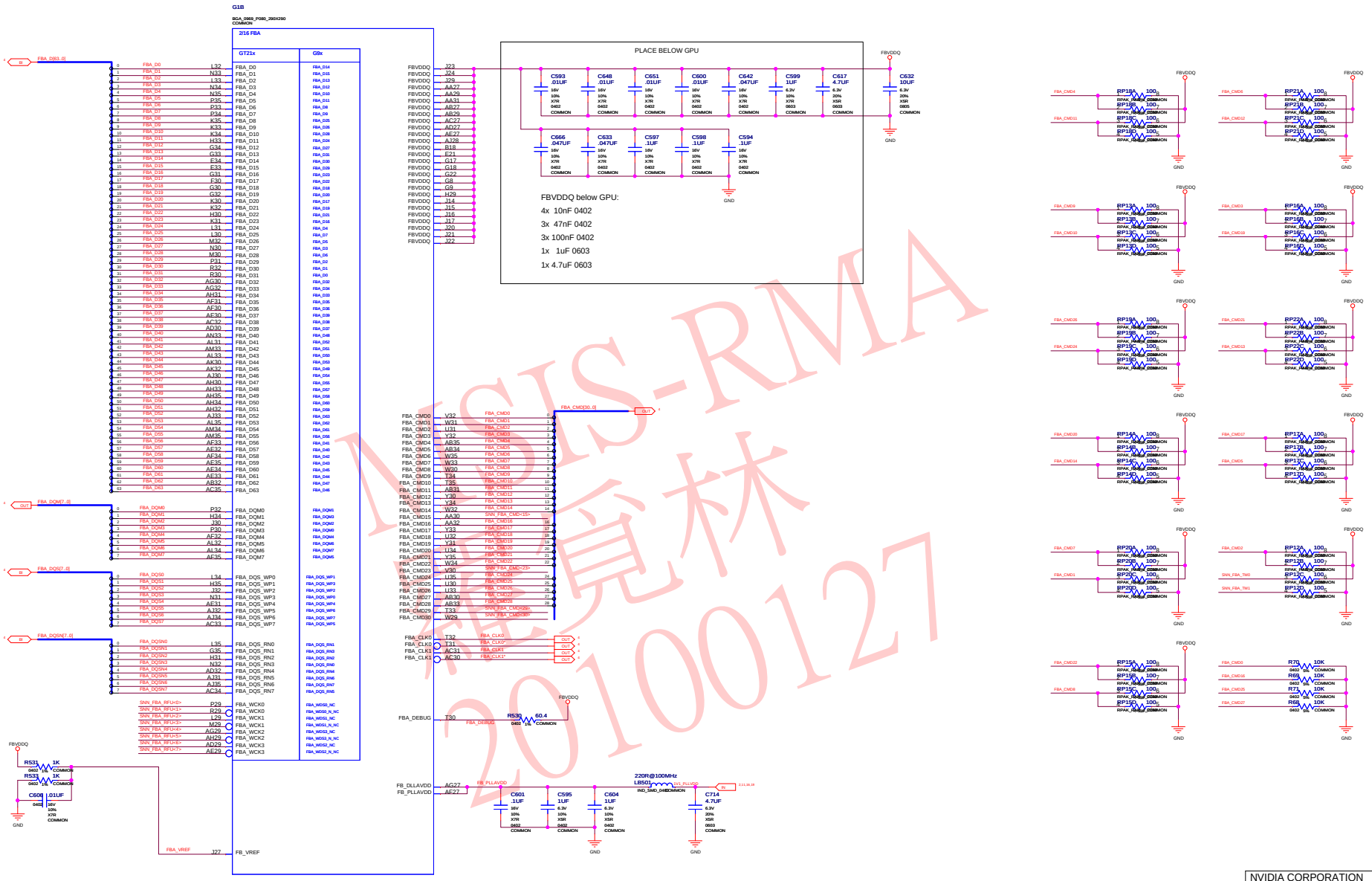

NSIS-RMA
程序机
20100127

ASSEMBLY	
PAGE DETAIL	PARTITION A FRAME BUFFER INTERFACE

ALL NVIDIA DESIGN SPECIFICATIONS, REFERENCE SPECIFICATIONS, REFERENCE BOARDS, FILES, DRAWINGS, DIAGNOSTICS, LISTS AND OTHER DOCUMENTS OR INFORMATION (TOGETHER AND SEPARATELY, 'MATERIALS') ARE BEING PROVIDED 'AS IS'. THE MATERIALS MAY CONTAIN KNOWN AND UNKNOWN VIOLATIONS OR DEVIATIONS OF INDUSTRY STANDARDS AND SPECIFICATIONS. NVIDIA MAKES NO WARRANTIES, EXPRESSED, IMPLIED, STATUTORY OR OTHERWISE WITH RESPECT TO THE MATERIALS OR OTHERWISE, AND EXPRESSLY DISCLAIMS ALL IMPLIED WARRANTIES INCLUDING, WITHOUT LIMITATION, THE WARRANTIES OF DESIGN, OF NONINFRINGEMENT, MERCHANTABILITY OR FITNESS FOR A PARTICULAR PURPOSE, OR ARISING FROM A COURSE OF DEALING, TRADE USAGE, TRADE PRACTICE, OR INDUSTRY STANDARDS.

NVIDIA CORPORATION
2701 SAN TOMAS EXPRESSWAY
SANTA CLARA, CA 95050, USA

NV_PN	600-10681-base-100 A		
ID		PAGE	
NAME		DATE	05-FEB-2009

Title: Cnxf Part
Report:
Design: p681
Date: Jan 22 13:35:02 2009

BKT1 [16.4E]
C1 [12.4F]
C2 [10.3G]
C3 [12.3G]
C4 [11.2G]
C5 [12.4F]
C6 [10.3G]
C7 [9.2G]
C8 [9.1G]
C9 [19.4D]
C10 [9.2G]
C11 [9.3G]
C12 [12.2D]
C13 [12.3E]
C14 [12.3E]
C15 [12.3E]
C16 [12.3E]
C17 [12.3E]
C18 [12.3E]
C19 [12.3E]
C20 [12.3E]
C21 [12.2G]
C22 [10.2G]
C23 [11.4F]
C24 [10.1G]
C25 [10.2G]
C26 [10.2F]
C27 [9.2F]
C28 [19.4C]
C29 [11.4E]
C30 [19.4B]
C31 [20.3B]
C32 [19.4C]
C33 [21.1E]
C34 [20.3B]
C35 [21.1E]
C36 [19.4B]
C37 [19.4A]
C38 [20.3B]
C39 [21.3B]
C40 [21.3G]
C41 [20.2C]
C42 [21.3F]
C43 [21.3B]
C44 [20.2C]
C45 [17.4G]
C46 [21.3G]
C47 [17.4G]
C48 [21.3F]
C49 [2.1A]
C50 [17.3G]
C51 [21.1G]
C52 [21.3C]
C53 [18.5F]
C54 [21.1F]
C55 [18.4F]
C56 [21.4D]
C57 [21.4G]
C58 [17.4C]
C59 [2.1A]
C60 [2.1A]
C61 [21.1G]
C62 [21.4H]
C63 [19.4F]
C64 [21.1F]
C65 [21.3H]
C66 [16.3C]
C67 [16.3D]
C68 [19.2B]
C69 [19.2C]
C70 [2.4G]
C71 [16.3A]
C72 [8.3B]
C73 [10.3B]
C74 [8.3B]
C75 [8.3A]
C76 [8.1D]
C77 [8.2D]
C78 [8.2A]
C79 [21.4B]
C80 [5.4F]
C81 [8.1B]
C82 [8.2B]
C83 [20.2G]
C84 [20.2H]
C85 [20.3G]
C86 [20.2F]
C87 [20.2G]
C88 [20.3G]

C89 [20.2F]
C90 [20.2F]
C91 [20.3H]
C92 [21.4G]
C93 [20.3G]
C94 [5.3D]
C95 [5.3D]
C96 [5.3B]
C97 [5.1D]
C98 [5.1A]
C99 [20.4C]
C100 [5.3B]
C101 [5.3A]
C102 [5.2D]
C103 [20.4F]
C104 [5.4F]
C105 [5.4F]
C106 [5.5C]
C107 [20.3G]
C108 [20.3D]
C109 [20.3F]
C110 [20.3D]
C111 [21.4D]
C112 [21.4D]
C113 [21.3E]
C114 [21.4H]
C115 [21.4G]
C116 [20.2G]
C117 [21.4H]
C118 [21.4G]
C119 [15.2B]
C120 [21.3C]
C130 [17.1E]
C131 [17.2E]
C133 [21.4E]
C501 [20.2E]
C502 [20.2D]
C503 [5.2C]
C504 [5.4A]
C505 [5.4A]
C506 [5.5C]
C507 [5.4F]
C508 [5.2B]
C509 [5.2C]
C510 [5.1C]
C511 [5.2A]
C512 [5.2B]
C513 [5.4F]
C514 [5.4C]
C515 [5.2C]
C516 [2.4C]
C517 [20.2C]
C518 [5.4F]
C519 [5.3A]
C520 [5.4F]
C521 [5.1A]
C522 [5.3D]
C523 [5.2A]
C524 [5.1D]
C525 [20.2D]
C526 [20.3C]
C527 [5.3D]
C528 [5.3A]
C529 [5.1B]
C530 [4.4H]
C531 [5.3D]
C532 [4.4G]
C533 [5.3D]
C534 [5.4C]
C535 [5.4D]
C536 [5.2D]
C537 [5.2B]
C538 [5.3C]
C539 [5.3C]
C540 [5.3B]
C541 [5.3B]
C542 [5.2D]
C543 [5.1C]
C544 [5.2A]
C545 [5.1B]
C546 [5.4B]
C547 [5.2A]
C548 [5.2D]
C549 [5.3C]
C550 [5.3B]
C551 [5.2C]
C552 [5.1B]
C553 [20.2F]
C554 [5.3C]
C555 [5.3B]
C556 [5.1D]
C557 [5.2B]
C558 [20.2G]
C559 [20.2G]
C560 [8.2A]
C561 [8.2B]

C562 [8.2A]
C563 [8.2B]
C564 [8.1B]
C565 [2.5C]
C566 [8.1A]
C567 [2.5C]
C568 [2.5C]
C569 [2.5C]
C570 [8.2C]
C571 [8.2A]
C572 [8.1A]
C573 [2.5C]
C574 [8.2B]
C575 [8.1B]
C576 [2.5C]
C577 [7.4H]
C578 [8.2D]
C579 [2.4C]
C580 [2.4C]
C581 [8.2C]
C582 [8.1C]
C583 [8.1C]
C584 [8.2C]
C585 [2.4C]
C586 [5.4E]
C587 [2.4C]
C588 [8.1D]
C589 [3.1D]
C590 [3.2E]
C591 [3.5D]
C592 [3.5D]
C593 [2.4C]
C594 [3.2D]
C595 [3.2D]
C596 [3.1E]
C597 [3.1D]
C598 [3.5C]
C599 [2.4C]
C600 [5.4E]
C601 [3.5D]
C602 [5.2E]
C603 [3.5A]
C604 [2.1F]
C605 [5.2F]
C606 [2.4C]
C607 [8.2C]
C608 [5.2F]
C609 [2.1F]
C610 [5.2F]
C611 [5.2F]
C612 [2.4C]
C613 [2.1E]
C614 [3.1E]
C615 [2.1F]
C616 [8.2D]
C617 [5.1E]
C618 [5.2F]
C619 [8.2D]
C620 [8.1D]
C621 [2.4C]
C622 [2.1F]
C623 [5.1F]
C624 [5.2G]
C625 [2.4C]
C626 [2.2E]
C627 [5.2F]
C628 [8.4A]
C629 [3.1E]
C630 [3.2D]
C631 [5.2F]
C632 [2.1F]
C633 [5.2F]
C634 [2.1F]
C635 [2.1F]
C636 [2.1E]
C637 [2.3C]
C638 [5.1F]
C639 [3.1E]
C640 [5.2F]
C641 [2.4E]
C642 [2.3C]
C643 [2.1F]
C644 [5.1F]
C645 [3.1D]
C646 [5.2E]
C647 [5.2F]
C648 [3.1D]
C649 [5.2F]
C650 [5.2F]
C651 [9.3B]
C652 [9.3B]
C653 [2.4E]
C654 [2.3F]
C655 [5.2E]
C656 [5.4F]
C657 [16.3B]

C658 [11.3B]
C659 [2.3F]
C660 [15.3B]
C661 [12.2B]
C662 [3.2D]
C663 [11.3B]
C664 [2.3C]
C665 [2.3C]
C666 [2.4F]
C667 [12.2B]
C668 [2.2F]
C669 [12.4B]
C670 [16.3B]
C671 [11.3B]
C672 [11.3B]
C673 [2.2F]
C674 [2.4F]
C675 [8.3B]
C676 [8.3B]
C677 [2.2F]
C678 [8.4B]
C679 [10.3B]
C680 [17.3B]
C681 [11.3B]
C682 [2.3C]
C683 [2.3C]
C684 [11.3B]
C685 [2.2G]
C686 [8.3A]
C687 [10.3B]
C688 [11.3B]
C689 [9.3A]
C690 [16.3B]
C691 [5.4F]
C692 [12.4A]
C693 [2.3C]
C694 [8.4A]
C695 [9.3A]
C696 [12.2A]
C697 [10.3A]
C698 [9.3A]
C699 [2.3C]
C700 [12.4A]
C701 [8.3B]
C702 [8.3A]
C703 [8.3A]
C704 [11.3A]
C705 [2.3C]
C706 [8.3D]
C707 [16.3B]
C708 [10.3A]
C709 [11.3A]
C710 [2.3C]
C711 [3.5D]
C712 [7.4G]
C713 [5.5B]
C714 [12.2A]
C715 [19.2C]
C716 [19.2G]
C717 [8.4C]
C718 [19.2F]
C719 [2.2C]
C720 [2.2C]
C721 [8.3D]
C722 [8.3C]
C723 [8.3C]
C724 [8.4G]
C725 [8.3B]
C726 [17.2C]
C728 [8.3D]
C729 [2.2C]
C730 [2.2C]
C731 [8.4C]
C732 [5.4E]
C733 [18.3F]
C734 [19.2F]
C735 [8.3C]
C736 [8.3C]
C737 [2.2C]
C738 [8.3D]
C739 [8.3D]
C740 [8.3D]
C742 [2.2C]
C743 [21.2A]
C744 [21.2F]
C746 [21.2F]
C748 [21.1F]
C750 [21.2E]
C752 [21.2C]
C755 [2.1A]
C757 [21.2C]
C758 [21.3E]
C759 [21.3F]
C760 [21.4F]
C761 [21.3F]
C762 [21.2B]

C763 [9.2E]
C764 [10.3E]
C765 [10.4E]
C766 [10.4E]
C767 [12.4B]
C768 [9.4F]
C769 [10.4F]
C770 [10.4F]
C771 [10.3F]
C772 [9.5F]
C773 [9.3F]
C774 [9.5F]
C775 [9.4F]
C776 [9.3F]
CN1 [2.3B]
D1 [12.4E]
D2 [9.2E]
D3 [9.1E]
D4 [10.2E]
D5 [10.1E]
D6 [12.2E]
D7 [9.3F]
D8 [10.2F]
D9 [10.3F]
D10 [9.2F]
D11 [11.4E]
D12 [12.2E]
D13 [17.4F]
D14 [19.4B]
D15 [17.3F]
D16 [18.5G]
D501 [20.3F]
D502 [17.2E]
D503 [17.2F]
D508 [10.3E]
D509 [10.5E]
D510 [10.4E]
D511 [9.4E]
D512 [9.5E]
D513 [9.4E]
F1 [19.4C]
G1 [2.3D]
G1 [3.3C]
G1 [5.4H]
G1 [8.3C]
G1 [8.3G]
G1 [9.3C]
G1 [10.3C]
G1 [11.3C]
G1 [12.4B]
G1 [13.3D]
G1 [14.3D]
G1 [15.2C 15.4C]
G1 [16.3C]
G1 [17.3C]
G1 [18.4C]
J1 [10.5G]
J2 [12.3H]
J3 [11.3D]
J4 [10.4D]
J5 [17.4H]
J6 [17.3H]
J7 [17.5B]
L1 [9.2G]
L2 [9.3G]
L3 [10.3G]
L4 [10.2C]
L5 [21.2G]
L7 [17.4F]
L8 [21.4G]
L10 [20.2G]
L11 [20.2G]
LS01 [10.4E]
LS02 [10.4F]
LS03 [10.3E]
LS04 [9.4F]
LS05 [9.4F]
LS06 [9.3F]
LB1 [12.4F]
LB2 [9.2G]
LB3 [9.1G]
LB4 [11.4F]
LB5 [10.1F]
LB6 [10.1F]
LBS01 [3.5D]
LBS02 [11.3A]
LBS03 [2.4F]
LBS04 [9.2A]
LBS05 [11.3A]
LBS06 [16.3A]
LBS07 [12.2A]
LBS08 [10.2A]
LBS09 [12.3A]
M1 [7.2D 7.4B 7.4C]
M2 [7.4B 7.4C 7.2B]
M3 [7.2F 7.4D 7.4E]
M4 [7.4E 7.4D 7.2H]
M5 [4.4C 4.4B 4.2D]
M6 [4.2B 4.4B 4.4C]
M7 [4.2H 4.4E 4.4D]
M8 [4.2F 4.4E 4.4D]
MEC1 [16.2F]
MEC2 [16.2F]
MEC3 [16.3E]
MEC4 [16.2E]
MEC5 [16.2E]
MEC6 [16.3G]
Q1 [12.4D]
Q2 [12.1E]
Q3 [12.2E]
Q4 [11.4D]
Q5 [20.2B]
Q6 [21.4F]
Q7 [21.4F]
Q8 [17.4F]
Q9 [21.2F]
Q10 [21.2F]
Q11 [19.4G]
Q12 [19.4F]
Q13 [17.2E]
Q14 [20.2E]
Q15 [20.3E]
Q16 [20.4F]
Q17 [20.4B]
Q18 [20.4C]
Q19 [21.4B]
Q20 [17.1E]
Q502 [17.2F]
Q503 [21.2B]
Q504 [21.2B]
Q505 [21.3B]
Q507 [21.2B]
Q508 [12.4A]
R1 [12.4D]
R2 [12.4F]
R3 [12.4E]
R4 [9.1F]
R5 [12.2F]
R6 [9.2E]
R7 [10.1E]
R8 [9.1E]
R9 [9.1F]
R10 [11.4E]
R11 [10.1F]
R12 [10.1E]
R13 [10.1F]
R14 [12.2D]
R15 [12.1D]
R16 [11.4D]
R17 [12.2F]
R18 [11.4D]
R19 [12.2D]
R20 [12.2D]
R21 [19.4B]
R22 [19.4B]
R23 [19.4A]
R24 [17.4G]
R25 [17.4F]
R26 [2.1B]
R27 [2.1C]
R28 [17.4C]
R29 [18.4E]
R30 [18.4E]
R31 [18.5E]
R32 [18.5F]
R33 [17.5C]
R34 [2.2C]
R35 [17.3G]
R36 [17.2E]
R37 [17.3G]
R38 [17.2E]
R39 [17.4C]
R40 [17.4B]
R41 [17.1E]
R42 [19.4F]
R43 [17.5C]
R44 [19.4G]
R45 [19.2C]
R46 [19.2C]
R47 [19.2C]
R48 [17.2D]
R49 [17.2C]
R50 [18.4D]
R51 [17.3E]

R52 [17.4E]
R53 [13.3C]
R54 [15.5D]
R55 [10.3B]
R56 [8.4H]
R57 [2.1C]
R58 [8.4H]
R59 [8.4H]
R60 [7.3A]
R61 [8.4H]
R62 [20.2F]
R63 [20.4B]
R64 [20.4B]
R65 [20.2E]
R66 [20.4E]
R67 [20.4E]
R68 [20.4E]
R69 [20.4F]
R70 [20.4F]
R71 [20.4G]
R72 [3.4H]
R73 [3.4H]
R74 [20.3G]
R75 [20.3D]
R76 [3.4H]
R77 [3.4H]
R78 [4.3A]
R79 [21.4A]
R80 [21.4A]
R81 [21.4B]
R82 [21.1B]
R83 [15.1B]
R84 [15.3D]
R85 [21.4C]
R86 [21.4C]
R101 [20.4B]
R167 [21.1E]
R168 [21.3A]
R169 [21.3A]
R170 [21.4A]
R171 [21.3A]
R172 [21.3B]
R173 [21.3B]
R174 [21.2C]
R175 [21.3C]
R176 [21.3C]
R177 [21.3C]
R178 [21.2C]
R179 [21.2C]
R180 [21.2C]
R181 [21.3C]
R182 [21.3C]
R183 [21.4D]
R184 [21.3D]
R185 [21.4D]
R186 [21.4D]
R187 [21.3E]
R189 [21.3E]
R190 [21.1E]
R191 [21.1E]
R194 [17.1E]
R195 [17.2E]
R196 [17.2E]
R197 [21.2B]
R199 [21.3C]
R200 [21.4D]
R201 [21.4E]
R202 [21.4E]
R203 [21.2C]
R501 [20.2D]
R502 [20.2D]
R503 [20.3C]
R504 [20.3C]
R505 [20.3B]
R506 [20.3B]
R507 [4.3A]
R508 [4.3G]
R509 [20.2D]
R510 [4.3C]
R511 [4.4H]
R512 [4.4H]
R513 [4.4G]
R514 [4.4G]
R515 [4.2A]
R516 [4.2E]
R517 [4.3E]
R518 [7.3G]
R519 [7.2E]
R520 [7.4H]
R521 [7.4H]
R522 [2.5F]
R523 [3.4D]
R524 [3.5A]
R525 [6.5D]
R526 [3.5A]
R527 [7.3E]

R528 [6.5D]
R529 [6.5D]
R530 [2.5F]
R531 [6.4D]
R532 [2.2C]
R533 [9.3D]
R534 [9.4D]
R535 [9.5D]
R536 [9.3B]
R537 [13.3C]
R538 [18.4B]
R539 [11.3B]
R540 [12.3B]
R541 [18.2B]
R542 [18.4B]
R543 [18.2C]
R544 [14.3C]
R545 [10.3D]
R546 [18.2B]
R547 [10.4D]
R548 [18.2B]
R549 [10.5D]
R550 [18.2C]
R551 [18.2B]
R552 [14.3C]
R553 [16.3D]
R554 [7.3A]
R555 [17.3D]
R556 [17.3D]
R557 [17.2C]
R558 [16.3C]
R559 [7.4G]
R560 [18.2D]
R561 [7.4G]
R562 [18.3F]
R563 [18.2D]
R565 [19.2F]
R566 [19.2F]
R567 [18.2D]
R568 [19.2F]
R569 [17.3E]
R570 [18.2D]
R572 [17.3E]
R573 [18.2E]
R574 [18.2E]
R580 [7.3C]
R581 [7.2A]
R582 [21.2B]
R583 [21.2A]
R584 [21.2A]
R589 [21.2E]
R590 [21.2F]
R591 [2.1C]
R595 [21.2D]
R596 [2.1C]
R597 [2.1C]
R599 [2.1B]
R603 [2.1C]
R604 [21.2C]
R605 [21.4D]
R610 [21.3F]
R611 [21.2B]
R612 [21.3E]
R614 [10.3D]
R615 [10.5D]
R616 [10.4D]
R617 [9.4E]
R618 [9.2E]
R619 [9.5E]
R620 [9.3E]
R621 [9.3E]
R622 [12.4A]
R623 [10.2E]
R624 [12.4B]
R625 [12.4B]
R626 [12.4B]
R627 [12.4B]
R628 [12.4B]
R629 [12.4B]
R630 [12.4B]
R631 [12.4B]
R632 [10.3E]
RP1 [6.1H 6.1H 6.1H 6.1H]
RP2 [6.2G 6.2G 6.2G 6.2G]
RP3 [6.2G 6.3G 6.2G 6.3G]
RP4 [6.3H 6.3H 6.3H 6.3H]
RP5 [6.1G 6.1G 6.1G 6.1G]
RP6 [6.3G 6.3G 6.3G 6.3G]
RP7 [6.4G 6.4G 6.4G 6.4G]

RP8 [6.4H 6.4H 6.4H 6.4H]
RP9 [6.3H 6.3H 6.2H 6.2H]
RP10 [6.2H 6.2H 6.2H 6.2H]
RP11 [6.4G 6.4G 6.4G 6.4G]
RP12 [3.4H 3.4H 3.4H 3.4H]
RP13 [3.2G 3.2G 3.2G 3.2G]
RP14 [3.3G 3.3G 3.3G 3.3G]
RP15 [3.4G 3.4G 3.4G 3.4G]
RP16 [3.2H 3.2H 3.2H 3.2H]
RP17 [3.3H 3.3H 3.3H 3.3H]
RP18 [3.1G 3.1G 3.1G 3.1G]
RP19 [3.3G 3.3G 3.2G 3.2G]
RP20 [3.4G 3.4G 3.4G 3.4G]
RP21 [3.1H 3.1H 3.1H 3.1H]
RP22 [3.3H 3.3H 3.2H 3.2H]
U1 [12.2E]
U2 [19.4B]
U3 [18.5F]
U4 [18.4F]
U5 [19.2B]
U6 [21.3D]
US01 [20.3D]
US02 [17.2B]
US03 [18.3F]
US04 [19.2F]
US06 [9.2D 9.3D]
US06 [10.2D 10.3D]
Y1 [16.3C]

MSI-MA 羅鏡林 20100127

ASSEMBLY	BASE LEVEL GENERIC SCHEMATIC ONLY, COMMON & NO_STUFF ASSEMBLY NOTES AND BOM NOT FINAL
PAGE DETAIL	<edit here to insert page detail>

ALL NVIDIA DESIGN SPECIFICATIONS, REFERENCE SPECIFICATIONS, REFERENCE BOARDS, FILES, DRAWINGS, DIAGNOSTICS, LISTS AND OTHER DOCUMENTS OR INFORMATION (TOGETHER AND SEPARATELY, 'MATERIALS') ARE BEING PROVIDED 'AS IS'. THE MATERIALS MAY CONTAIN KNOWN AND UNKNOWN VIOLATIONS OR DEVIATIONS OF INDUSTRY STANDARDS AND SPECIFICATIONS. NVIDIA MAKES NO WARRANTIES, EXPRESSED, IMPLIED, STATUTORY OR OTHERWISE WITH RESPECT TO THE MATERIALS OR OTHERWISE, AND EXPRESSLY DISCLAIMS ALL IMPLIED WARRANTIES INCLUDING, WITHOUT LIMITATION, THE WARRANTIES OF DESIGN, OF NONINFRINGEMENT, MERCHANTABILITY OR FITNESS FOR A PARTICULAR PURPOSE, OR ARISING FROM A COURSE OF DEALING, TRADE USAGE, TRADE PRACTICE, OR INDUSTRY STANDARDS.

NVIDIA CORPORATION
2701 SAN TOMAS EXPRESSWAY
SANTA CLARA, CA 95050, USA

NV_PN	600-10681-base-100 A		
ID		PAGE	
NAME	<ENGINEER>	DATE	05-FEB-2009

SNN_FBA2_NC_A1 4.3E
SNN_FBA2_NC_A11 4.3E
SNN_FBA2_NC_T1 4.3E
SNN_FBA2_NC_T11 4.3E
SNN_FBA2_ODT1 4.2E
SNN_FBA2_ZQ1 4.2E
SNN_FBA3_CKE1 4.2G
SNN_FBA3_CS1 4.2G
SNN_FBA3_NC_A1 4.3G
SNN_FBA3_NC_A11 4.3G
SNN_FBA3_NC_T1 4.3G
SNN_FBA3_NC_T11 4.3G
SNN_FBA3_ODT1 4.2G
SNN_FBA3_ZQ1 4.2G
SNN_FBA_CMD<15> 3.3C
SNN_FBA_CMD<23> 3.4C
SNN_FBA_CMD<29> 3.4C
SNN_FBA_CMD<30> 3.4C
SNN_FBA_RFU<0> 3.4B
SNN_FBA_RFU<1> 3.4B
SNN_FBA_RFU<2> 3.4B
SNN_FBA_RFU<3> 3.4B
SNN_FBA_RFU<4> 3.4B
SNN_FBA_RFU<5> 3.4B
SNN_FBA_RFU<6> 3.4B
SNN_FBA_RFU<7> 3.5B
SNN_FBC0_CKE1 7.2A
SNN_FBC0_CS1 7.2A
SNN_FBC0_NC_A1 7.3A
SNN_FBC0_NC_A11 7.3A
SNN_FBC0_NC_T1 7.3A
SNN_FBC0_NC_T11 7.3A
SNN_FBC0_ODT1 7.2A
SNN_FBC0_ZQ1 7.2A
SNN_FBC1_CKE1 7.2C
SNN_FBC1_CS1 7.2C
SNN_FBC1_NC_A1 7.3C
SNN_FBC1_NC_A11 7.3C
SNN_FBC1_NC_T1 7.3C
SNN_FBC1_NC_T11 7.3C
SNN_FBC1_ODT1 7.2C
SNN_FBC1_ZQ1 7.2C
SNN_FBC2_CKE1 7.2E
SNN_FBC2_CS1 7.2E
SNN_FBC2_NC_A1 7.3E
SNN_FBC2_NC_A11 7.3E
SNN_FBC2_NC_T1 7.3E
SNN_FBC2_NC_T11 7.3E
SNN_FBC2_ODT1 7.2E
SNN_FBC2_ZQ1 7.2E
SNN_FBC3_CKE1 7.2G
SNN_FBC3_CS1 7.2G
SNN_FBC3_NC_A1 7.3G
SNN_FBC3_NC_A11 7.3G
SNN_FBC3_NC_T1 7.3G
SNN_FBC3_NC_T11 7.3G
SNN_FBC3_ODT1 7.2G
SNN_FBC3_ZQ1 7.2G
SNN_FBC_CMD<15> 6.3C
SNN_FBC_CMD<23> 6.4C
SNN_FBC_CMD<29> 6.4C
SNN_FBC_CMD<30> 6.4C
SNN_FBC_RFU1 6.5C
SNN_FBC_RFU2 6.5C
SNN_FBC_RFU<0> 6.4B
SNN_FBC_RFU<1> 6.4B
SNN_FBC_RFU<2> 6.4B
SNN_FBC_RFU<3> 6.4B
SNN_FBC_RFU<4> 6.4B
SNN_FBC_RFU<5> 6.5B
SNN_FBC_RFU<6> 6.5B
SNN_FBC_RFU<7> 6.5B
SNN_GND_SENSE_1 2.4E
SNN_GND_SENSE_3 2.4E
SNN_GPIO2 17.3C
SNN_GPIO3 17.3C
SNN_GPIO10 17.3C
SNN_GPIO11 17.3C
SNN_GPIO12 17.3C
SNN_GPIO14 17.4C
SNN_GPIO15 14.3E
SNN_GPIO17 17.4C
SNN_GPIO18 17.4C
SNN_GPIO19 13.3E
SNN_GPIO20 17.4C
SNN_GPIO21 14.4E
SNN_GPIO22 17.4C
SNN_GPIO23 17.4C
SNN_HDA_BCLK 18.4C
SNN_HDA_RST* 18.4C
SNN_HDA_SDI 18.4C
SNN_HDA_SDO 18.4C
SNN_HDA_SYNC 18.4C
SNN_HDMI_CEC 12.3G
SNN_HDMI_RSVD 12.3G
SNN_I2CD_SCL 17.3C

SNN_I2CD_SDA 17.3C
SNN_I2CE_SCL 17.3C
SNN_I2CE_SDA 17.3C
SNN_I2C_EN 12.3E
SNN_I2C_NC 12.2D
SNN_IFPA_TXD3 11.3D
SNN_IFPA_TXD3* 11.3D
SNN_IFPB_TXD7 11.3D
SNN_IFPB_TXD7* 11.3D
SNN_IFPD_AUX 13.3E
SNN_IFPD_AUX* 13.3E
SNN_IFPD_L0 13.3E
SNN_IFPD_L0* 13.3E
SNN_IFPD_L1 13.3E
SNN_IFPD_L1* 13.3E
SNN_IFPD_L2 13.3E
SNN_IFPD_L2* 13.3E
SNN_IFPD_L3 13.3E
SNN_IFPD_L3* 13.3E
SNN_IFPD_RSET 13.3C
SNN_IFPEF_RSET 14.3C
SNN_IFPE_AUX 14.2E
SNN_IFPE_AUX* 14.2E
SNN_IFPE_TXC 14.3E
SNN_IFPE_TXC* 14.2E
SNN_IFPE_TXD0 14.3E
SNN_IFPE_TXD0* 14.3E
SNN_IFPE_TXD1 14.3E
SNN_IFPE_TXD1* 14.3E
SNN_IFPE_TXD2 14.3E
SNN_IFPE_TXD2* 14.3E
SNN_IFPF_AUX 14.3E
SNN_IFPF_AUX* 14.3E
SNN_IFPF_TXC 14.3E
SNN_IFPF_TXC* 14.3E
SNN_IFPF_TXD0 14.3E
SNN_IFPF_TXD0* 14.3E
SNN_IFPF_TXD1 14.3E
SNN_IFPF_TXD1* 14.3E
SNN_IFPF_TXD2 14.4E
SNN_IFPF_TXD2* 14.4E
SNN_J25 18.3C
SNN_J26 18.3C
SNN_MIOACAL_PD_VDD 15.2B
Q
SNN_MIOACAL_PU_GND 15.2B
SNN_MIOAD<0> 15.1D
SNN_MIOAD<1> 15.1D
SNN_MIOAD<2> 15.1D
SNN_MIOAD<3> 15.2D
SNN_MIOAD<4> 15.2D
SNN_MIOAD<5> 15.2D
SNN_MIOAD<6> 15.2D
SNN_MIOAD<7> 15.2D
SNN_MIOAD<8> 15.2D
SNN_MIOAD<9> 15.2D
SNN_MIOAD<10> 15.2D
SNN_MIOAD<11> 15.2D
SNN_MIOAD<12> 15.2D
SNN_MIOAD<13> 15.2D
SNN_MIOAD<14> 15.2D
SNN_MIOAD_CTL3 15.2D
SNN_MIOA_CLKOUT 15.2D
SNN_MIOA_CLKOUT* 15.2D
SNN_MIOA_DE 15.2D
SNN_MIOA_HSYNC 15.2D
SNN_MIOA_VREF 15.2B
SNN_MIOA_VSYNC 15.2D
SNN_MIOB<0> 15.3D
SNN_MIOB<1> 15.3D
SNN_MIOB<2> 15.3D
SNN_MIOB<3> 15.3D
SNN_MIOB<4> 15.3D
SNN_MIOB<5> 15.4D
SNN_MIOB<6> 15.4D
SNN_MIOB<7> 15.4D
SNN_MIOB<8> 15.4D
SNN_MIOB<9> 15.4D
SNN_MIOB<10> 15.4D
SNN_MIOB<11> 15.4D
SNN_MIOBD<12> 15.4D
SNN_MIOBD<13> 15.4D
SNN_MIOBD<14> 15.4D
SNN_MIOB_CAL_PD_VD 15.4B
DQ
SNN_MIOB_CAL_PU_GN 15.4B
D
SNN_MIOB_CLKOUT 15.4D
SNN_MIOB_CLKOUT* 15.4D
SNN_MIOB_CTL3 15.4D
SNN_MIOB_DE 15.4D
SNN_MIOB_VREF 15.4B
SNN_MIOB_VSYNC 15.4D
SNN_NC<1> 2.2E
SNN_NC<2> 2.2E
SNN_NC<3> 2.2E

SNN_NC<4> 2.2E
SNN_NC<5> 2.3E
SNN_NC<6> 2.3E
SNN_NC<7> 2.3E
SNN_NC<8> 2.3E
SNN_NC<9> 2.3E
SNN_NC<10> 2.3E
SNN_NC<11> 2.3E
SNN_NC<14> 2.3E
SNN_NC<16> 2.3E
SNN_NC<17> 2.3E
SNN_NC<18> 2.3E
SNN_NC<21> 2.3E
SNN_NC<22> 2.3E
SNN_NC<23> 2.3E
SNN_PEX_RFU 2.5E
SNN_PEX_WAKE* 2.2B
SNN_PE_PRSNT2_A 2.1A
SNN_PE_PRSNT2_B 2.2A
SNN_PE_PRSNT2_C 2.3A
SNN_PE_RSVD2 2.2A
SNN_PE_RSVD3 2.2A
SNN_PE_RSVD4 2.2A
SNN_PE_RSVD5 2.2A
SNN_PE_RSVD6 2.3A
SNN_PE_RSVD7 2.4A
SNN_PE_RSVD8 2.4A
SNN_PGOOD_OUT* 18.4D
SNN_VDD_SENSE_1 2.4E
SNN_VDD_SENSE_3 2.4E
SNN_VGA_ID0 10.4G
SNN_VGA_ID0L 10.4G
SNN_VGA_ID2 10.4G
SNN_VGA_ID2L 10.5G
SPDIF_IN 18.4D
STRAP0 15.4E 18.2A
STRAP1 15.4E 18.2A
STRAP2 15.4E 18.2A
STRAP_REF0 18.4C
STRAP_REF1 18.4C
THERM_ALERT 17.2C
THERM_DA 17.3B
THERM_DC 17.3B
THERM_NPN 17.2E
THERM_OVERTMP* 17.2D
THERM_PNP 17.1E
THERM_THERM 17.2C
XTAL_IN 16.3C
XTAL_OUT 16.3D
XTAL_OUTBUFF 16.3D
XTAL_SSIN 16.3C

MSIS-RMA
羅覓林
20100127

ASSEMBLY	BASE LEVEL GENERIC SCHEMATIC ONLY, COMMON & NO_STUFF ASSEMBLY NOTES AND BOM NOT FINAL
PAGE DETAIL	<edit here to insert page detail>

ALL NVIDIA DESIGN SPECIFICATIONS, REFERENCE SPECIFICATIONS, REFERENCE BOARDS, FILES, DRAWINGS, DIAGNOSTICS, LISTS AND OTHER DOCUMENTS OR INFORMATION (TOGETHER AND SEPARATELY, 'MATERIALS') ARE BEING PROVIDED 'AS IS'. THE MATERIALS MAY CONTAIN KNOWN AND UNKNOWN VIOLATIONS OR DEVIATIONS OF INDUSTRY STANDARDS AND SPECIFICATIONS. NVIDIA MAKES NO WARRANTIES, EXPRESSED, IMPLIED, STATUTORY OR OTHERWISE WITH RESPECT TO THE MATERIALS OR OTHERWISE, AND EXPRESSLY DISCLAIMS ALL IMPLIED WARRANTIES INCLUDING, WITHOUT LIMITATION, THE WARRANTIES OF DESIGN, OF NONINFRINGEMENT, MERCHANTABILITY OR FITNESS FOR A PARTICULAR PURPOSE, OR ARISING FROM A COURSE OF DEALING, TRADE USAGE, TRADE PRACTICE, OR INDUSTRY STANDARDS.

NVIDIA CORPORATION
2701 SAN TOMAS EXPRESSWAY
SANTA CLARA, CA 95050, USA

NV_PN	600-10681-base-100 A		
ID		PAGE	
NAME	<ENGINEER>	DATE	05-FEB-2009

Title: Basenet Report
Design: p681
Date: Jan 22 13:35:02 2009

Base nets and synonyms for
p681_lib:P681(@p681_lib,p681(sch_1))
Base Signal Location([Zone][dir])

1V1_ADJ 19.2B
1V1_PLLVDD 2.4G 3.5E 11.2A 16.3A
19.2C
1V8_ADJ 19.2F
3V3 2.1A
3V3_INFO 18.5F
5V 19.4C
5V_ADJ 19.4B
12V 2.1A
12V_D 19.4A
12V_F 21.1F
DACA_BLUE 9.4E 9.5A
DACA_BLUE_C 9.4H 9.5A 11.3G
DACA_GREEN 9.4E 9.5A
DACA_GREEN_C 9.4H 9.5A 11.3G
DACA_HSYNC 9.3C 9.5A
DACA_HSYNC_BUF 9.3E 9.5A
DACA_HSYNC_C 9.3H 9.5A 11.3G
DACA_HSYNC_R 9.3E 9.5A
DACA_RED 9.3E 9.5A
DACA_RED_C 9.3H 9.5A 11.3G
DACA_RSET 9.3B
DACA_VDD 9.2B
DACA_VREF 9.3B
DACA_VSYNC 9.3C 9.5A
DACA_VSYNC_BUF 9.2E 9.5A
DACA_VSYNC_C 9.2H 9.5A 11.3G
DACA_VSYNC_R 9.2E 9.5A
DACB_BLUE 10.4D 10.5A
DACB_BLUE_C 10.4F 10.5A
DACB_GREEN 10.4D 10.5A
DACB_GREEN_C 10.4F 10.5A
DACB_HSYNC 10.3C 10.5A
DACB_HSYNC_BUF 10.3E 10.5A
DACB_HSYNC_C 10.3G 10.5A
DACB_HSYNC_R 10.3E 10.5A
DACB_RED 10.3D 10.5A
DACB_RED_C 10.3F 10.5A
DACB_RSET 10.3B
DACB_VDD 10.2B
DACB_VREF 10.2B
DACB_VSYNC 10.3C 10.5A
DACB_VSYNC_BUF 10.2E 10.5A
DACB_VSYNC_C 10.2G 10.5A
DACB_VSYNC_R 10.2E 10.5A
DDC_5V 19.4D
FBA_CLK0 3.4D 4.2A 4.2C 4.5G
FBA_CLK0* 3.4D 4.2A 4.2C 4.5G
FBA_CLK1 3.4D 4.2D 4.2F 4.5G
FBA_CLK1* 3.4D 4.2D 4.2F 4.5G
FBA_CMD<0> 3.3C 3.4G 4.2A 4.2C
FBA_CMD<30..0> 3.3D 4.1A 4.1C 4.1D
4.1F 4.5G
FBA_CMD<1> 3.3C 3.4F 4.1A 4.1C
4.1E 4.1G
FBA_CMD<2> 3.3C 3.4G 4.1A 4.1C
FBA_CMD<3> 3.2G 3.3C 4.1A 4.1C
4.1E 4.1G
FBA_CMD<4> 3.1F 3.3C 4.1A 4.1C
4.1E 4.1G
FBA_CMD<5> 3.3C 3.3G 4.1A 4.1C
4.1E 4.1G
FBA_CMD<6> 3.1G 3.3C 4.1A 4.1C
4.1E 4.1G
FBA_CMD<7> 3.3C 3.4F 4.1A 4.1C
4.1E 4.1G
FBA_CMD<8> 3.3C 3.4F 4.1A 4.1C
4.1E 4.1G
FBA_CMD<9> 3.2F 3.3C 4.2A 4.2C
4.2E 4.2G
FBA_CMD<10> 3.2F 3.3C 4.1A 4.1C
4.1E 4.1G
FBA_CMD<11> 3.1F 3.3C 4.1E 4.1G
FBA_CMD<12> 3.1G 3.3C 4.2A 4.2C
4.2E 4.2G
FBA_CMD<13> 3.3C 3.3G 4.2A 4.2C
4.2E 4.2G
FBA_CMD<14> 3.3C 3.3F 4.1A 4.1C
4.1E 4.1G
FBA_CMD<16> 3.3C 3.4G 4.2E 4.2G
FBA_CMD<17> 3.3C 3.3G 4.1A 4.1C
4.1E 4.1G
FBA_CMD<18> 3.3C 3.4G 4.1E 4.1G
4.2A 4.2C
FBA_CMD<19> 3.2G 3.3C 4.1A 4.1C
4.1E 4.1G
FBA_CMD<20> 3.3F 3.4C 4.1A 4.1C
4.1E 4.1G

FBA_CMD<21> 3.2G 3.4C 4.1A 4.1C
4.1E 4.1G
FBA_CMD<22> 3.4C 3.4F 4.1E 4.1G
4.2A 4.2C
FBA_CMD<24> 3.3F 3.4C 4.1A 4.1C
4.1E 4.1G
FBA_CMD<25> 3.4C 3.4G 4.3A 4.3C
FBA_CMD<26> 3.2F 3.4C 4.1A 4.1C
4.1E 4.1G
FBA_CMD<27> 3.4C 3.4G 4.2E 4.2G
FBA_CMD<28> 3.4C 4.2E 4.2G 4.3A
4.3C
FBA_D<0> 3.1B 4.3B
FBA_D<63..0> 3.1A 4.3A 4.5G
FBA_D<1> 3.1B 4.3B
FBA_D<2> 3.1B 4.4B
FBA_D<3> 3.1B 4.4B
FBA_D<4> 3.1B 4.4B
FBA_D<5> 3.1B 4.4B
FBA_D<6> 3.1B 4.4B
FBA_D<7> 3.1B 4.4B
FBA_D<8> 3.1B 4.4B
FBA_D<9> 3.1B 4.4B
FBA_D<10> 3.1B 4.4B
FBA_D<11> 3.1B 4.4B
FBA_D<12> 3.2B 4.4B
FBA_D<13> 3.2B 4.4B
FBA_D<14> 3.2B 4.4B
FBA_D<15> 3.2B 4.4B
FBA_D<16> 3.2B 4.3C
FBA_D<17> 3.2B 4.3C
FBA_D<18> 3.2B 4.4C
FBA_D<19> 3.2B 4.4C
FBA_D<20> 3.2B 4.4C
FBA_D<21> 3.2B 4.4C
FBA_D<22> 3.2B 4.4C
FBA_D<23> 3.2B 4.4C
FBA_D<24> 3.2B 4.4C
FBA_D<25> 3.2B 4.4C
FBA_D<26> 3.2B 4.4C
FBA_D<27> 3.2B 4.4C
FBA_D<28> 3.2B 4.4C
FBA_D<29> 3.2B 4.4C
FBA_D<30> 3.2B 4.4C
FBA_D<31> 3.2B 4.4C
FBA_D<32> 3.2B 4.3D
FBA_D<33> 3.2B 4.3D
FBA_D<34> 3.2B 4.4D
FBA_D<35> 3.2B 4.4D
FBA_D<36> 3.2B 4.4D
FBA_D<37> 3.2B 4.4D
FBA_D<38> 3.2B 4.4D
FBA_D<39> 3.2B 4.4D
FBA_D<40> 3.2B 4.4D
FBA_D<41> 3.2B 4.4D
FBA_D<42> 3.3B 4.4D
FBA_D<43> 3.3B 4.4D
FBA_D<44> 3.3B 4.4D
FBA_D<45> 3.3B 4.4D
FBA_D<46> 3.3B 4.4D
FBA_D<47> 3.3B 4.4D
FBA_D<48> 3.3B 4.3E
FBA_D<49> 3.3B 4.3E
FBA_D<50> 3.3B 4.4E
FBA_D<51> 3.3B 4.4E
FBA_D<52> 3.3B 4.4E
FBA_D<53> 3.3B 4.4E
FBA_D<54> 3.3B 4.4E
FBA_D<55> 3.3B 4.4E
FBA_D<56> 3.3B 4.4E
FBA_D<57> 3.3B 4.4E
FBA_D<58> 3.3B 4.4E
FBA_D<59> 3.3B 4.4E
FBA_D<60> 3.3B 4.4E
FBA_D<61> 3.3B 4.4E
FBA_D<62> 3.3B 4.4E
FBA_D<63> 3.3B 4.4E
FBA_DEBUG 3.4C
FBA_DQM<0> 3.3B 4.4B
FBA_DQM<7..0> 3.3A 4.3A 4.5G
FBA_DQM<1> 3.3B 4.4B
FBA_DQM<2> 3.3B 4.4C
FBA_DQM<3> 3.3B 4.4C
FBA_DQM<4> 3.3B 4.4D
FBA_DQM<5> 3.3B 4.4D
FBA_DQM<6> 3.4B 4.4E
FBA_DQM<7> 3.4B 4.4E
FBA_DQS<0> 3.4B 4.4B 4.5E
FBA_DQS<7..0> 3.4A 4.3A 4.5E
FBA_DQS<1> 3.4B 4.4B 4.5E
FBA_DQS<2> 3.4B 4.4C 4.5E
FBA_DQS<3> 3.4B 4.4C 4.5E
FBA_DQS<4> 3.4B 4.4D 4.5E
FBA_DQS<5> 3.4B 4.4D 4.5E
FBA_DQS<6> 3.4B 4.4E 4.5E
FBA_DQS<7> 3.4B 4.4E 4.5E

FBA_DQSN<0> 3.4B 4.4B 4.5E
FBA_DQSN<7..0> 3.4A 4.3A 4.5E
FBA_DQSN<1> 3.4B 4.4B 4.5E
FBA_DQSN<2> 3.4B 4.4C 4.5E
FBA_DQSN<3> 3.4B 4.4C 4.5E
FBA_DQSN<4> 3.4B 4.4D 4.5E
FBA_DQSN<5> 3.4B 4.4D 4.5E
FBA_DQSN<6> 3.4B 4.4E 4.5E
FBA_DQSN<7> 3.4B 4.4E 4.5E
FBA_VREF 3.5B
FBA_VREF0 4.3C 4.3E 4.4G
FBA_VREF1 4.3F 4.3H 4.4H
FBA_ZQ0 4.3A
FBA_ZQ1 4.3C
FBA_ZQ2 4.3E
FBA_ZQ3 4.3G
FBC_CLK0 6.4D 7.2A 7.2C 7.5G
FBC_CLK0* 6.4D 7.3A 7.2C 7.5G
FBC_CLK1 6.4D 7.2D 7.2F 7.5G
FBC_CLK1* 6.4D 7.2D 7.2F 7.5G
FBC_CMD<0> 6.3C 6.4G 7.2A 7.2C
FBC_CMD<30..0> 6.3D 7.1A 7.1C 7.1D
7.1F 7.5G
FBC_CMD<1> 6.2F 6.3C 7.1A 7.1C
7.1E 7.1G
FBC_CMD<2> 6.1G 6.3C 7.1A 7.1C
FBC_CMD<3> 6.2G 6.3C 7.1A 7.1C
7.1E 7.1G
FBC_CMD<4> 6.2G 6.3C 7.1A 7.1C
7.1E 7.1G
FBC_CMD<5> 6.3C 6.4G 7.1A 7.1C
7.1E 7.1G
FBC_CMD<6> 6.3C 6.4F 7.1A 7.1C
7.1E 7.1G
FBC_CMD<7> 6.3C 6.3G 7.1A 7.1C
7.1E 7.1G
FBC_CMD<8> 6.3C 6.4F 7.1A 7.1C
7.1E 7.1G
FBC_CMD<9> 6.3C 6.3F 7.2A 7.2C
7.2E 7.2G
FBC_CMD<10> 6.3C 6.3G 7.1A 7.1C
7.1E 7.1G
FBC_CMD<11> 6.3C 6.4F 7.1E 7.1G
FBC_CMD<12> 6.3C 6.4G 7.2A 7.2C
7.2E 7.2G
FBC_CMD<13> 6.3C 6.3F 7.2A 7.2C
7.2E 7.2G
FBC_CMD<14> 6.1G 6.3C 7.1A 7.1C
7.1E 7.1G
FBC_CMD<16> 6.3C 6.4G 7.2E 7.2G
FBC_CMD<17> 6.3C 6.3G 7.1A 7.1C
7.1E 7.1G
FBC_CMD<18> 6.1F 6.3C 7.1E 7.1G
7.2A 7.2C
FBC_CMD<19> 6.3C 6.4F 7.1A 7.1C
7.1E 7.1G
FBC_CMD<20> 6.3F 6.4C 7.1A 7.1C
7.1E 7.1G
FBC_CMD<21> 6.3G 6.4C 7.1A 7.1C
7.1E 7.1G
FBC_CMD<22> 6.1F 6.4C 7.1E 7.1G
7.2A 7.2C
FBC_CMD<24> 6.2F 6.4C 7.1A 7.1C
7.1E 7.1G
FBC_CMD<25> 6.4C 6.4G 7.3A 7.3C
FBC_CMD<26> 6.2F 6.4C 7.1A 7.1C
7.1E 7.1G
FBC_CMD<27> 6.4C 6.4G 7.2E 7.2G
FBC_CMD<28> 6.4C 7.2E 7.2G 7.3A
7.3C
FBC_D<0> 6.1B 7.3B
FBC_D<63..0> 6.1A 7.3A 7.5G
FBC_D<1> 6.1B 7.4B
FBC_D<2> 6.1B 7.4B
FBC_D<3> 6.1B 7.4B
FBC_D<4> 6.1B 7.4B
FBC_D<5> 6.1B 7.4B
FBC_D<6> 6.1B 7.4B
FBC_D<7> 6.1B 7.4B
FBC_D<8> 6.1B 7.4B
FBC_D<9> 6.1B 7.4B
FBC_D<10> 6.1B 7.4B
FBC_D<11> 6.1B 7.4B
FBC_D<12> 6.2B 7.4B
FBC_D<13> 6.2B 7.4B
FBC_D<14> 6.2B 7.4B
FBC_D<15> 6.2B 7.4B
FBC_D<16> 6.2B 7.3C
FBC_D<17> 6.2B 7.4C
FBC_D<18> 6.2B 7.4C
FBC_D<19> 6.2B 7.4C
FBC_D<20> 6.2B 7.4C
FBC_D<21> 6.2B 7.4C
FBC_D<22> 6.2B 7.4C
FBC_D<23> 6.2B 7.4C
FBC_D<24> 6.2B 7.4C

FBC_D<25> 6.2B 7.4C
FBC_D<26> 6.2B 7.4C
FBC_D<27> 6.2B 7.4C
FBC_D<28> 6.2B 7.4C
FBC_D<29> 6.2B 7.4C
FBC_D<30> 6.2B 7.4C
FBC_D<31> 6.2B 7.4C
FBC_D<32> 6.2B 7.3D
FBC_D<33> 6.2B 7.4D
FBC_D<34> 6.2B 7.4D
FBC_D<35> 6.2B 7.4D
FBC_D<36> 6.2B 7.4D
FBC_D<37> 6.2B 7.4D
FBC_D<38> 6.2B 7.4D
FBC_D<39> 6.2B 7.4D
FBC_D<40> 6.2B 7.4D
FBC_D<41> 6.2B 7.4D
FBC_D<42> 6.3B 7.4D
FBC_D<43> 6.3B 7.4D
FBC_D<44> 6.3B 7.4D
FBC_D<45> 6.3B 7.4D
FBC_D<46> 6.3B 7.4D
FBC_D<47> 6.3B 7.4D
FBC_D<48> 6.3B 7.3E
FBC_D<49> 6.3B 7.4E
FBC_D<50> 6.3B 7.4E
FBC_D<51> 6.3B 7.4E
FBC_D<52> 6.3B 7.4E
FBC_D<53> 6.3B 7.4E
FBC_D<54> 6.3B 7.4E
FBC_D<55> 6.3B 7.4E
FBC_D<56> 6.3B 7.4E
FBC_D<57> 6.3B 7.4E
FBC_D<58> 6.3B 7.4E
FBC_D<59> 6.3B 7.4E
FBC_D<60> 6.3B 7.4E
FBC_D<61> 6.3B 7.4E
FBC_D<62> 6.3B 7.4E
FBC_D<63> 6.3B 7.4E
FBC_DEBUG 6.4C
FBC_DQM<0> 6.3B 7.4B
FBC_DQM<7..0> 6.3A 7.3A 7.5G
FBC_DQM<1> 6.3B 7.4B
FBC_DQM<2> 6.3B 7.4C
FBC_DQM<3> 6.3B 7.4C
FBC_DQM<4> 6.3B 7.4D
FBC_DQM<5> 6.3B 7.4D
FBC_DQM<6> 6.4B 7.4E
FBC_DQM<7> 6.4B 7.4E
FBC_DQS<0> 6.4B 7.4B 7.5E
FBC_DQS<7..0> 6.4A 7.3A 7.5E
FBC_DQS<1> 6.4B 7.4B 7.5E
FBC_DQS<2> 6.4B 7.4C 7.5E
FBC_DQS<3> 6.4B 7.4C 7.5E
FBC_DQS<4> 6.4B 7.4D 7.5E
FBC_DQS<5> 6.4B 7.4D 7.5E
FBC_DQS<6> 6.4B 7.4E 7.5E
FBC_DQS<7> 6.4B 7.4E 7.5E
FBC_DQSN<0> 6.4B 7.4B 7.5E
FBC_DQSN<7..0> 6.4A 7.3A 7.5E
FBC_DQSN<1> 6.4B 7.4B 7.5E
FBC_DQSN<2> 6.4B 7.4C 7.5E
FBC_DQSN<3> 6.4B 7.4C 7.5E
FBC_DQSN<4> 6.4B 7.4D 7.5E
FBC_DQSN<5> 6.4B 7.4D 7.5E
FBC_DQSN<6> 6.4B 7.4E 7.5E
FBC_DQSN<7> 6.4B 7.4E 7.5E
FBC_VREF0 7.3C 7.3E 7.4G
FBC_VREF1 7.3F 7.3H 7.4H
FBC_ZQ0 7.3A
FBC_ZQ1 7.3C
FBC_ZQ2 7.3E
FBC_ZQ3 7.3G
FBVDDQ 20.2H
FBVDDQ_RBOT 20.4F
FBVDDQ_VSEL 20.4E
FB_CAL_PD_VDDQ 6.5C
FB_CAL_PU_GND 6.5C
FB_CAL_TERM_GND 6.5C
FB_PLLAVDD 3.5C
GPIO0_HPD_DVI 11.4D
GPIO0_HPD_DVI_Q 11.4D
GPIO0_HPD_DVI_R 11.4E
GPIO0_HPD_DVI_RL 11.3G
GPIO1_HPDC 12.4C
GPIO1_HPDC_Q 12.4D
GPIO1_HPDC_R 12.4F
GPIO1_HPDC_R_L 12.4G
GPIO4_FAN_TACH 17.3C
GPIO5_NVVDD_VSEL1 17.3D 21.1A 21.3A
GPIO6_NVVDD_VSEL2 17.3D 21.3A
GPIO7_NVVDD_VSEL3 17.3D 21.2A 21.4A
GPIO8_THERM_OVERTM 17.3C
I²
GPIO9_FAN_PWM 17.3C
GPIO9_FAN_PWM_Q 17.4F

GPIO9_FAN_PWM_Q_L 17.4G
GPIO9_FAN_PWM_R 17.3F
GPIO13_FBVDDQ_VSEL 17.4D 20.4D
GPIO16_FAN_PWM 17.4C
GPU_PLLVDD 16.3B
GPU_TESTMODE 2.5E
HDMI_PD_1 12.4B
I2CA_SCL 9.2C 9.2D
I2CA_SCL_C 9.2H 11.3G
I2CA_SCL_T 9.2F
I2CA_SDA 9.1D 9.2C
I2CA_SDA_C 9.1H 11.3G
I2CA_SDA_T 9.1F
I2CB_SCL 10.2C
I2CB_SCL_R 10.1E
I2CB_SCL_R_L 10.1G
I2CB_SDA 10.2C
I2CB_SDA_R 10.1E
I2CB_SDA_R_L 10.1G
I2CC_SCL 17.2B 17.3F 18.5E
I2CC_SCL_G 17.3C
I2CC_SDA 17.2B 17.3F 18.5E
I2CC_SDA_G 17.3C
I2CH_SCL 18.4D
I2CH_SDA 18.4D
I2CS_SCL 2.1C 17.3F
I2CS_SDA 2.2C 17.3F
I2CW_SCL 12.3C
I2CW_SCL_R 12.2D
I2CW_SCL_R_Q 12.2E
I2CW_SDA 12.3C
I2CW_SDA_R 12.1D
I2CW_SDA_R_Q 12.1E
IFPAB_IOVDD 11.3B
IFPAB_PLLVDD 11.2B
IFPAB_RSET 11.3B
IFPA_TXC 11.3D
IFPA_TXC* 11.3D
IFPA_TXD0 11.2D
IFPA_TXD0* 11.2D
IFPA_TXD1 11.2D
IFPA_TXD1* 11.2D
IFPA_TXD2 11.3D
IFPA_TXD2* 11.2D
IFPB_TXD4 11.3D
IFPB_TXD4* 11.3D
IFPB_TXD5 11.3D
IFPB_TXD5* 11.3D
IFPB_TXD6 11.3D
IFPB_TXD6* 11.3D
IFPCEF_PLLVDD 14.3C
IFPC_IOVDD 12.3A
IFPC_PLLVDD 12.3A
IFPC_RSET 12.3A
IFPC_TXC 12.3D
IFPC_TXC* 12.3D
IFPC_TXC_C1 12.3F 12.4B
IFPC_TXC_C1* 12.3F 12.4B
IFPC_TXD0 12.3D
IFPC_TXD0* 12.3D
IFPC_TXD0_C1 12.3F 12.4B
IFPC_TXD0_C1* 12.3F 12.4B
IFPC_TXD1 12.3D
IFPC_TXD1* 12.3D
IFPC_TXD1_C1 12.3F 12.4B
IFPC_TXD1_C1* 12.3F 12.4B
IFPC_TXD2 12.3D
IFPC_TXD2* 12.3D
IFPC_TXD2_C1 12.3F 12.4B
IFPC_TXD2_C1* 12.3F 12.4B
IFPD_IOVDD 13.3C
IFPD_PLLVDD 13.3C
IFPEF_IOVDD 14.3C
IFP_IOVDD_EN* 17.2E 19.4G
IFP_IOVDD_EN_RC 19.4F
IFP_PLLVDD 12.2A 18.2G
JTAG_TCLK 2.1C 17.4A
JTAG_TDI 2.1C 17.4A
JTAG_TDO 2.1C 17.5A
JTAG_TMS 2.1C 17.4A
JTAG_TRST* 2.1C 17.5A
MIOA_CLKIN 15.2D
MIOA_VDDQ 15.1C
MIOB_CLKIN 15.4D
NVVDD 21.2H
NVVDD_CP 21.3C
NVVDD_CP_RC 21.4D
NVVDD_CSN 21.3D
NVVDD_CSN_R 21.3D
NVVDD_CSP 21.3D
NVVDD_EAP 21.3C
NVVDD_EN 17.2F 21.2A
NVVDD_EN* 17.1E
NVVDD_FB 21.4D
NVVDD_FB_RC 21.4D
NVVDD_GND_SENSE 2.4F 21.4B

NVVDD_GND_SENSE_R 21.2B 21.4C
NVVDD_IOFS 21.2C
NVVDD_MODE 21.2C
NVVDD_MODE_Q 21.1B
NVVDD_MODE_R 21.2B
NVVDD_REFIN 21.3C
NVVDD_RSET 21.3C
NVVDD_SENSE 2.4F 21.4D
NVVDD_SENSE_R 21.4E
NVVDD_SS 21.3C
NVVDD_VID 21.3C
NVVDD_VREF 21.3C
NVVDD_VSEL2 21.3B
NVVDD_VSEL2_Q 21.3B
NVVDD_VSEL3 21.4B
NVVDD_VSEL3_Q 21.3C
PEX_CLKREQ* 2.1C
PEX_PLLVDD 2.4E
PEX_PLL_CLK_OUT 2.2C
PEX_PLL_CLK_OUT* 2.2C
PEX_PRSNT1* 2.1A
PEX_REFCLK 2.1G 2.2B
PEX_REFCLK* 2.1G 2.2B
PEX_RST* 2.2D 19.4E
PEX_RX0 2.2B 2.4G
PEX_RX0* 2.2B 2.4G
PEX_RX1 2.2B 2.4G
PEX_RX1* 2.2B 2.4G
PEX_RX2 2.2B 2.4G
PEX_RX2* 2.3B 2.4G
PEX_RX3 2.3B 2.4G
PEX_RX3* 2.3B 2.4G
PEX_RX4 2.3B 2.4G
PEX_RX4* 2.3B 2.4G
PEX_RX5 2.3B 2.4G
PEX_RX5* 2.3B 2.4G
PEX_RX6 2.3B 2.4G
PEX_RX6* 2.3B 2.4G
PEX_RX7 2.3B 2.4G
PEX_RX7* 2.4B 2.4G
PEX_RX8 2.4B 2.4G
PEX_RX8* 2.4B 2.4G
PEX_RX9 2.4B 2.4G
PEX_RX9* 2.4B 2.4G
PEX_RX10 2.4B 2.4G
PEX_RX10* 2.4B 2.4G
PEX_RX11 2.4B 2.4G
PEX_RX11* 2.4B 2.4G
PEX_RX12 2.4B 2.5G
PEX_RX12* 2.5B 2.5G
PEX_RX13 2.5B 2.5G
PEX_RX13* 2.5B 2.5G
PEX_RX14 2.5B 2.5G
PEX_RX14* 2.5B 2.5G
PEX_RX15 2.5B 2.5G
PEX_RX15* 2.5B 2.5G
PEX_SMCLK 2.1B
PEX_SMDAT 2.1B
PEX_TCLK 2.1B
PEX_TDI 2.1B
PEX_TDO 2.1B
PEX_TERMP 2.5E
PEX_TMS 2.1B
PEX_TRST* 2.1B
PEX_TX0 2.1G 2.2D
PEX_TX0* 2.1G 2.2D
PEX_TX1 2.1G 2.2D
PEX_TX1* 2.1G 2.2D
PEX_TX2 2.2D 2.2G
PEX_TX2* 2.2D 2.2G
PEX_TX3 2.2G 2.3D
PEX_TX3* 2.2G 2.3D
PEX_TX4 2.2G 2.3D
PEX_TX4* 2.2G 2.3D
PEX_TX5 2.2G 2.3D
PEX_TX5* 2.2G 2.3D
PEX_TX6 2.2G 2.3D
PEX_TX6* 2.2G 2.3D
PEX_TX7 2.2G 2.3D
PEX_TX7* 2.2G 2.3D
PEX_TX8 2.2G 2.4D
PEX_TX8* 2.2G 2.4D
PEX_TX9 2.2G 2.4D
PEX_TX9* 2.2G 2.4D
PEX_TX10 2.2G 2.4D
PEX_TX10* 2.2G 2.4D
PEX_TX11 2.2G 2.4D
PEX_TX11* 2.2G 2.4D
PEX_TX12 2.2G 2.4D
PEX_TX12* 2.2G 2.4D
PEX_TX13 2.2G 2.5D
PEX_TX13* 2.2G 2.5D
PEX_TX14 2.2G 2.5D
PEX_TX14* 2.2G 2.5D
PEX_TX15 2.2G 2.5D
PEX_TX15* 2.2G 2.5D

PEX_TX0 2.2B 2.3G
PEX_TX0* 2.2B 2.3G
PEX_TX1 2.2B 2.3G
PEX_TX1* 2.2B 2.3G
PEX_TX2 2.2B 2.3G
PEX_TX2* 2.2B 2.3G
PEX_TX3 2.3B 2.3G
PEX_TX3* 2.3B 2.3G
PEX_TX4 2.3B 2.3G
PEX_TX4* 2.3B 2.3G
PEX_TX5 2.3B 2.3G
PEX_TX5* 2.3B 2.3G
PEX_TX6 2.3B 2.3G
PEX_TX6* 2.3B 2.3G
PEX_TX7 2.3B 2.3G
PEX_TX7* 2.3B 2.3G
PEX_TX8 2.3G 2.4B
PEX_TX8* 2.3G 2.4B
PEX_TX9 2.3G 2.4B
PEX_TX9* 2.3G 2.4B
PEX_TX10 2.3G 2.4B
PEX_TX10* 2.3G 2.4B
PEX_TX11 2.3G 2.4B
PEX_TX11* 2.3G 2.4B
PEX_TX12 2.3G 2.4B
PEX_TX12* 2.3G 2.4B
PEX_TX13 2.3G 2.5B
PEX_TX13* 2.3G 2.5B
PEX_TX14 2.3G 2.5B
PEX_TX14* 2.4G 2.5B
PEX_TX15 2.4G 2.5B
PEX_TX15* 2.4G 2.5B
PEX_VDD 20.3B
PS_1V1_CP 20.3B
PS_1V1_DR 20.2C
PS_1V1_FB 20.3C
PS_FBVDDQ_BOOT 20.2D
PS_FBVDDQ_CP 20.3D
PS_FBVDDQ_CP_RC 20.3D
PS_FBVDDQ_EN 20.4B
PS_FBVDDQ_EN* 20.4C
PS_FBVDDQ_FB 20.3D
PS_FBVDDQ_FB_RC 20.4G
PS_FBVDDQ_FS_DIS 20.3C
PS_FBVDDQ_LG 20.3D
PS_FBVDDQ_PH 20.3D
PS_FBVDDQ_PVCC 20.2D
PS_FBVDDQ_PVCC_R 20.2C
PS_FBVDDQ_RC 20.2F
PS_FBVDDQ_UG 20.2D
PS_FBVDDQ_UG_R 20.2E
PS_FBVDDQ_VCC 20.2D
PS_NVVDD_BOOT1 21.2D
PS_NVVDD_BOOT2 21.3D
PS_NVVDD_EN 21.2C
PS_NVVDD_EN* 21.2B
PS_NVVDD_LG1 21.2D
PS_NVVDD_LG2 21.3D
PS_NVVDD_PH1 21.2D
PS_NVVDD_PH2 21.3D
PS_NVVDD_RC1 21.2F
PS_NVVDD_RC2 21.3F
PS_NVVDD_UG1 21.2D
PS_NVVDD_UG1_R 21.2E
PS_NVVDD_UG2 21.3D
PS_NVVDD_UG2_R 21.3E
PS_NVVDD_VCC9 21.2C
PS_NVVDD_VCC12 21.2C
ROM_CS* 18.3D
ROM_SCLK 18.2C 18.3D 18.3D
ROM_SI 18.2C 18.3D 18.3D
ROM_SO 18.2C 18.3D 18.3D
SNN_3V3AUX 2.1A
SNN_BIOB_HSYNC 15.4D
SNN_BTXC 11.3D
SNN_BTXC* 11.3D
SNN_BUFRST* 18.4D
SNN_CEC 18.4C
SNN_FBA0_CKE1 4.2A
SNN_FBA0_CS1 4.2A
SNN_FBA0_NC_A1 4.3A
SNN_FBA0_NC_A11 4.3A
SNN_FBA0_NC_T1 4.3A
SNN_FBA0_NC_T11 4.3A
SNN_FBA0_ODT1 4.2A
SNN_FBA0_ZQ1 4.2A
SNN_FBA1_CKE1 4.2C
SNN_FBA1_CS1 4.2C
SNN_FBA1_NC_A1 4.3C
SNN_FBA1_NC_A11 4.3C
SNN_FBA1_NC_T1 4.3C
SNN_FBA1_NC_T11 4.3C
SNN_FBA1_ODT1 4.2C
SNN_FBA1_ZQ1 4.2C
SNN_FBA2_CKE1 4.2E
SNN_FBA2_CS1 4.2E

MSI-RMA 羅馬林 20090127

ASSEMBLY	BASE LEVEL GENERIC SCHEMATIC ONLY, COMMON & NO_STUFF ASSEMBLY NOTES AND BOM NOT FINAL
PAGE DETAIL	<edit here to insert page detail>

ALL NVIDIA DESIGN SPECIFICATIONS, REFERENCE SPECIFICATIONS, REFERENCE BOARDS, FILES, DRAWINGS, DIAGNOSTICS, LISTS AND OTHER DOCUMENTS OR INFORMATION (TOGETHER AND SEPARATELY, "MATERIALS") ARE BEING PROVIDED 'AS IS'. THE MATERIALS MAY CONTAIN KNOWN AND UNKNOWN VIOLATIONS OR DEVIATIONS OF INDUSTRY STANDARDS AND SPECIFICATIONS. NVIDIA MAKES NO WARRANTIES, EXPRESSED, IMPLIED, STATUTORY OR OTHERWISE WITH RESPECT TO THE MATERIALS OR OTHERWISE, AND EXPRESSLY DISCLAIMS ALL IMPLIED WARRANTIES INCLUDING, WITHOUT LIMITATION, THE WARRANTIES OF DESIGN, OF NONINFRINGEMENT, MERCHANTABILITY OR FITNESS FOR A PARTICULAR PURPOSE, OR ARISING FROM A COURSE OF DEALING, TRADE USAGE, TRADE PRACTICE, OR INDUSTRY STANDARDS.

NVIDIA CORPORATION
2701 SAN TOMAS EXPRESSWAY
SANTA CLARA, CA 95050, USA

NV_PN	600-10681-base-100 A		
ID		PAGE	
NAME	<ENGINEER>	DATE	05-FEB-2009

Power Supply III: NVVDD

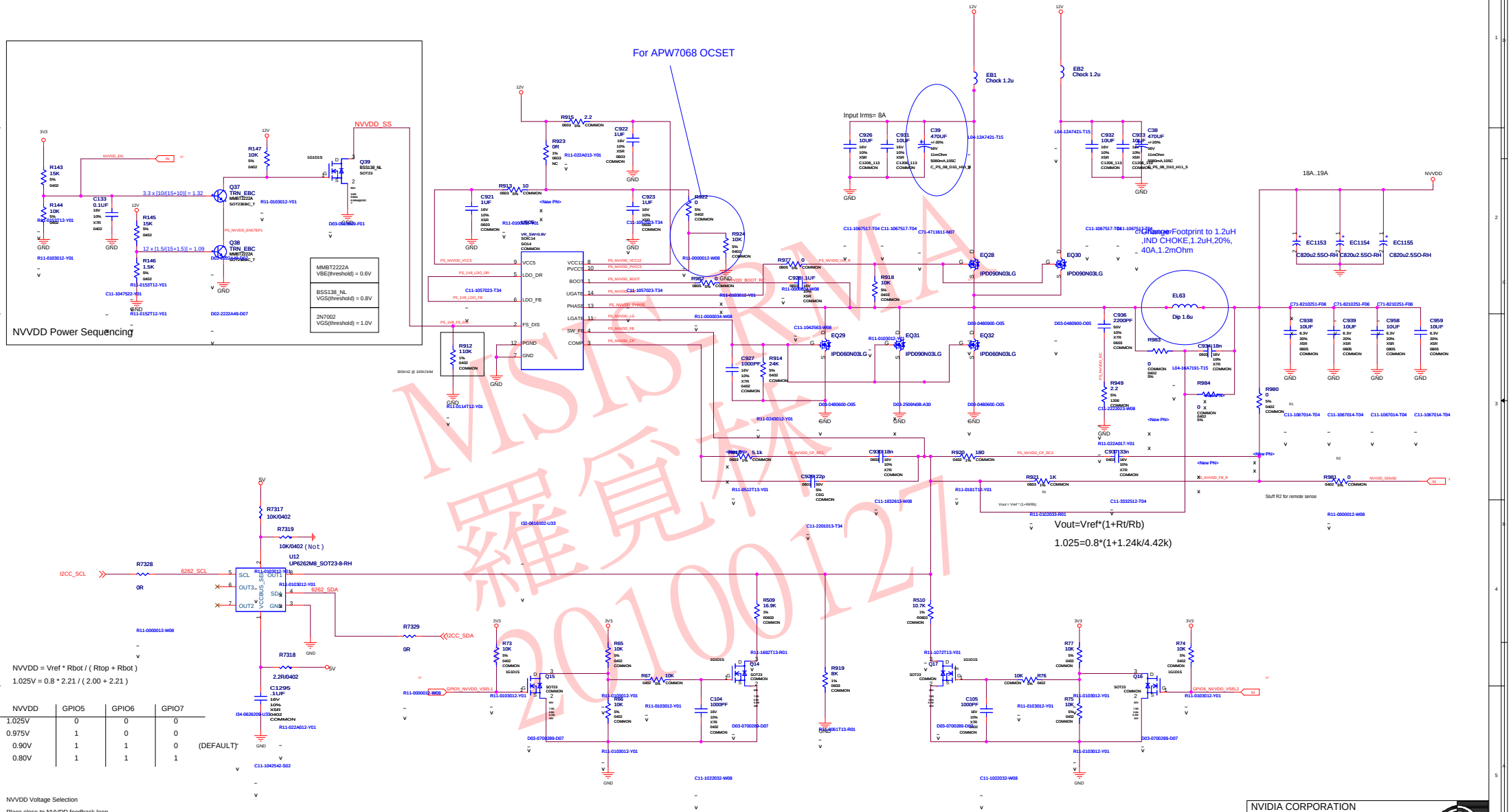

NVVDD	GPIO5	GPIO6	GPIO7
1.025V	0	0	0
0.975V	1	0	0
0.90V	1	1	0
0.80V	1	1	1

(DEFAULT)

ASSEMBLY	BASE LEVEL GENERIC SCHEMATIC ONLY, COMMON & NO_STUFF ASSEMBLY NOTES AND BOM NOT FINAL
PAGE DETAIL	NVVDD POWER SUPPLY

ALL NVIDIA DESIGN SPECIFICATIONS, REFERENCE SPECIFICATIONS, REFERENCE BOARDS, FILES, DRAWINGS, DIAGNOSTICS, LISTS AND OTHER DOCUMENTS OR INFORMATION (TOGETHER AND SEPARATELY, 'MATERIALS') ARE BEING PROVIDED 'AS IS'. THE MATERIALS MAY CONTAIN KNOWN AND UNKNOWN VIOLATIONS OR DEVIATIONS OF INDUSTRY STANDARDS AND SPECIFICATIONS. NVIDIA MAKES NO WARRANTIES, EXPRESSED, IMPLIED, STATUTORY OR OTHERWISE WITH RESPECT TO THE MATERIALS OR OTHERWISE, AND EXPRESSLY DISCLAIMS ALL IMPLIED WARRANTIES INCLUDING, WITHOUT LIMITATION, THE WARRANTIES OF DESIGN, OF NONINFRINGEMENT, MERCHANTABILITY OR FITNESS FOR A PARTICULAR PURPOSE, OR ARISING FROM A COURSE OF DEALING, TRADE USAGE, TRADE PRACTICE, OR INDUSTRY STANDARDS.

NVIDIA CORPORATION
2701 SAN TOMAS EXPRESSWAY
SANTA CLARA, CA 95050, USA

NV_PN	600-10681-base-100 A
ID	
PAGE	
NAME	
DATE	05-FEB-2009

MSI-RMA 羅宜林 20100127

PCI-EXPRESS INTERFACE

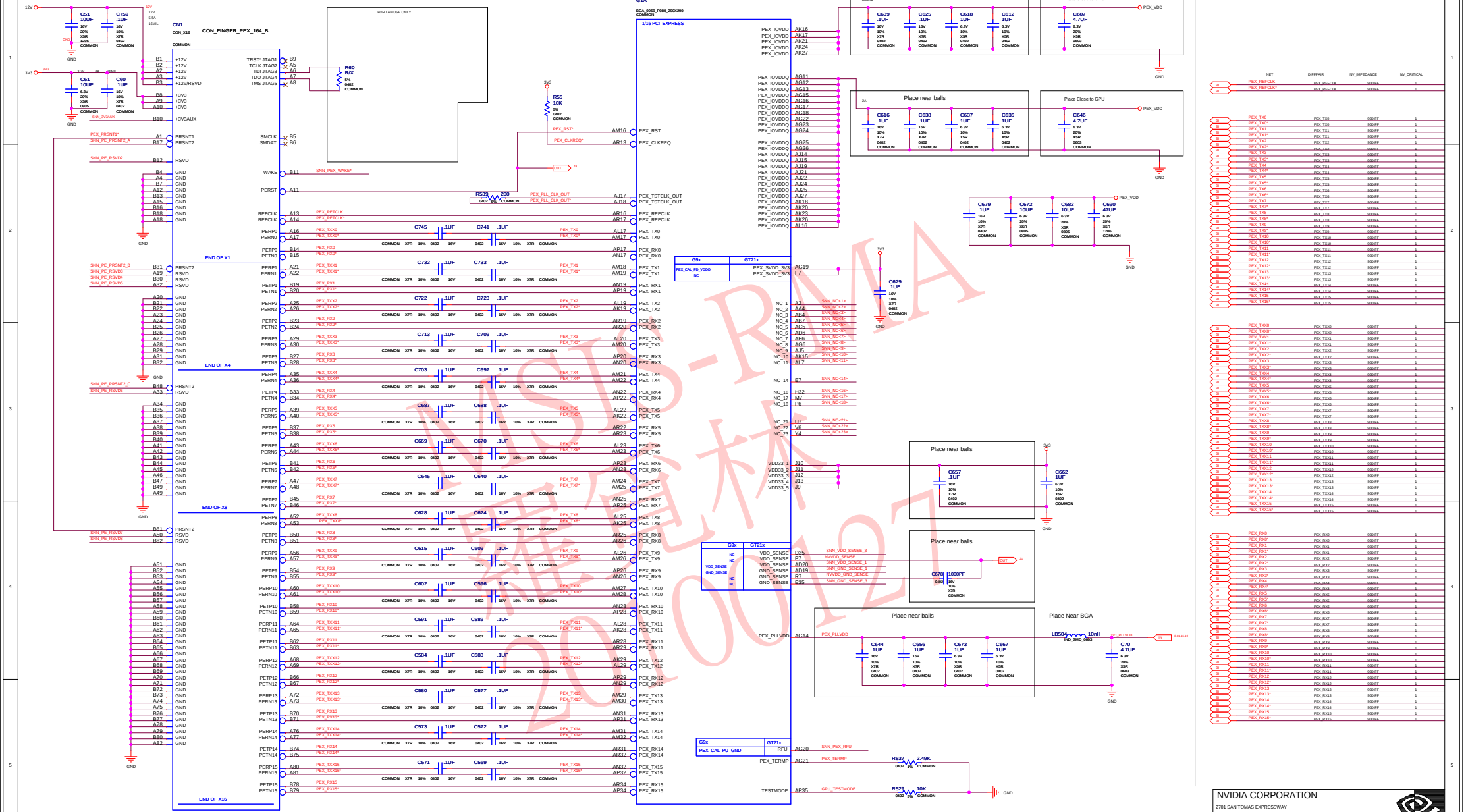

ASSEMBLY	
PAGE DETAIL	PCI-EXPRESS INTERFACE

ALL NVIDIA DESIGN SPECIFICATIONS, REFERENCE SPECIFICATIONS, REFERENCE BOARDS, FILES, DRAWINGS, DIAGNOSTICS, LISTS AND OTHER DOCUMENTS OR INFORMATION (TOGETHER AND SEPARATELY, 'MATERIALS') ARE BEING PROVIDED 'AS IS'. THE MATERIALS MAY CONTAIN KNOWN AND UNKNOWN VIOLATIONS OR DEVIATIONS OF INDUSTRY STANDARDS AND SPECIFICATIONS. NVIDIA MAKES NO WARRANTIES, EXPRESSED, IMPLIED, STATUTORY OR OTHERWISE WITH RESPECT TO THE MATERIALS OR OTHERWISE, AND EXPRESSLY DISCLAIMS ALL IMPLIED WARRANTIES INCLUDING, WITHOUT LIMITATION, THE WARRANTIES OF DESIGN, OF NONINFRINGEMENT, MERCHANTABILITY OR FITNESS FOR A PARTICULAR PURPOSE, OR ARISING FROM A COURSE OF DEALING, TRADE USAGE, TRADE PRACTICE, OR INDUSTRY STANDARDS.

NVIDIA CORPORATION
2701 SAN TOMAS EXPRESSWAY
SANTA CLARA, CA 95050, USA

NV_PN	600-10681-base-100 A		
ID		PAGE	
NAME		DATE	05-FEB-2009

LINEAR POWER SUPPLIES

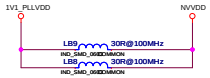

PEX_PLLVDD SUPPLY (OPTIAN)

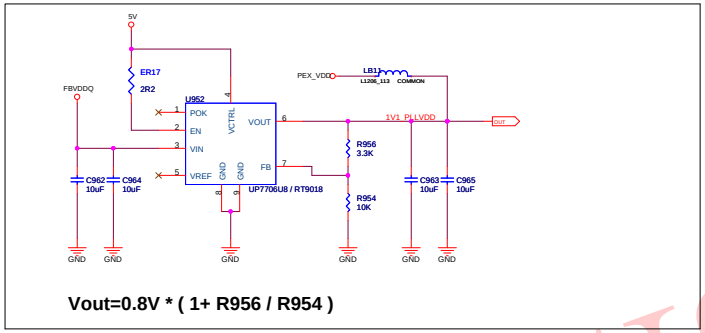

Vout=0.8V * (1+ R956 / R954)

IFP_PLLVDD SUPPLY

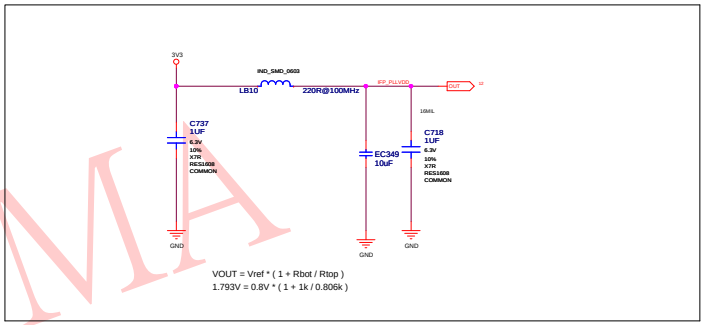

VOUT = Vref * (1 + Rbot / Rtop)

1.793V = 0.8V * (1 + 1k / 0.806k)

5V & DDC_5V REGULATOR

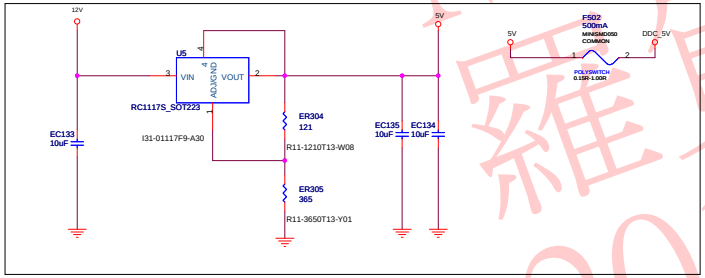

Vout=1.25V* [1+(ER305/ER304)]

IFP_IOVDD BACKDRIVE PREVENTION

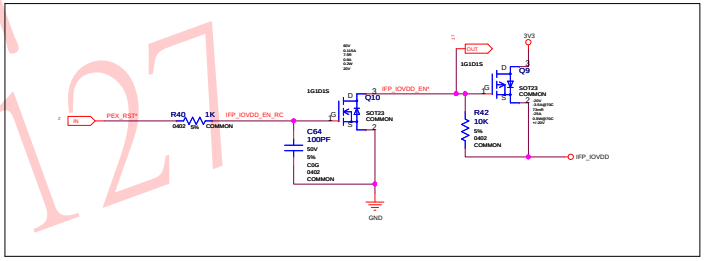

MSIS-RMA
羅覺林
20100127

ASSEMBLY	BASE LEVEL GENERIC SCHEMATIC ONLY, COMMON & NO_STUFF ASSEMBLY NOTES AND BOM NOT FINAL
PAGE DETAIL	LINEAR POWER SUPPLIES

ALL NVIDIA DESIGN SPECIFICATIONS, REFERENCE SPECIFICATIONS, REFERENCE BOARDS, FILES, DRAWINGS, DIAGNOSTICS, LISTS AND OTHER DOCUMENTS OR INFORMATION (TOGETHER AND SEPARATELY, 'MATERIALS') ARE BEING PROVIDED 'AS IS'. THE MATERIALS MAY CONTAIN KNOWN AND UNKNOWN VIOLATIONS OR DEVIATIONS OF INDUSTRY STANDARDS AND SPECIFICATIONS. NVIDIA MAKES NO WARRANTIES, EXPRESSED, IMPLIED, STATUTORY OR OTHERWISE WITH RESPECT TO THE MATERIALS OR OTHERWISE, AND EXPRESSLY DISCLAIMS ALL IMPLIED WARRANTIES INCLUDING, WITHOUT LIMITATION, THE WARRANTIES OF DESIGN, OF NONINFRINGEMENT, MERCHANTABILITY OR FITNESS FOR A PARTICULAR PURPOSE, OR ARISING FROM A COURSE OF DEALING, TRADE USAGE, TRADE PRACTICE, OR INDUSTRY STANDARDS.

NVIDIA CORPORATION
2701 SAN TOMAS EXPRESSWAY
SANTA CLARA, CA 95050, USA

NV_PN	600-10681-base-100 A		
ID		PAGE	
NAME		DATE	05-FEB-2009

BIOS ROM, HDCP ROM, STRAPPING OPTIONS

STRAPPING OPTIONS

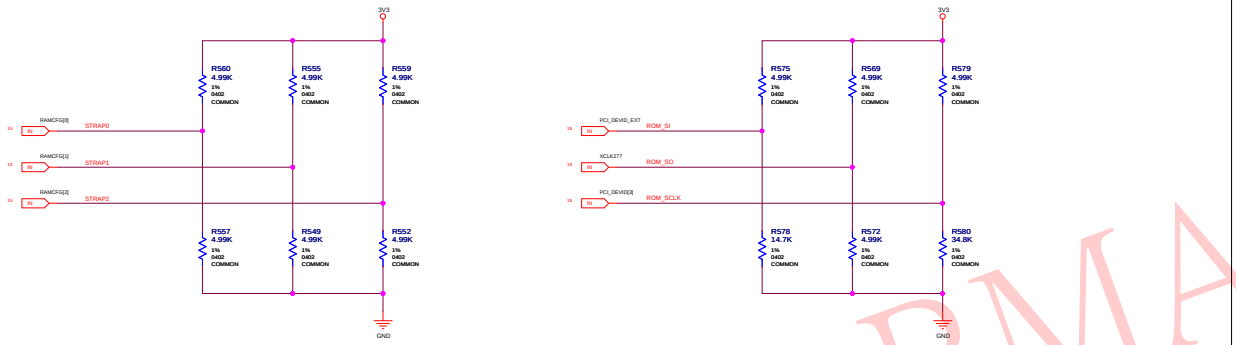

Strap0	USER[3:0]	EDID: 1111	45k PU
Strap1	3GIO_PADCFG[2:0]	DESKTOP: 0000	5k PD
Strap2	PCI_DEVID[3:0]	GT216-200: 0A21 0001	10k PD
ROM_SI	RAMCFG[3:0]		
ROM_SCLK	3: PCI_DEVID_EXT 2: SUB_VENDOR (1 = BIOS rom present) 1: SLOT_CLK_CFG (1 = common clk MCH/GPU) 0: PEX_PLL_EN_TERM (0 = disable pll term)	0110	35k PD
ROM_SO	3: XLK_417 (0 = POR 277MHz) 2: FB_0_BAR_SIZE (0 = POR 256MB) 1: SMB_ALT_ADDR (0=POR, 1= multiGPU) 0: VGA_DEVICE (0=3D device, 1=POR VGA device)	0001	5k PD

0001 128bit 64Mx16 DDR3 Qimonda
0010 128bit 64Mx16 DDR3 Hynix
0011 128bit 64Mx16 DDR3 Samsung
0101 128bit 128Mx16 DDR3 Qimonda
0110 128bit 128Mx16 DDR3 Hynix
0111 128bit 128Mx16 DDR3 Samsung
1001 64bit 64Mx16 DDR3 Qimonda
1010 64bit 64Mx16 DDR3 Hynix
1011 64bit 64Mx16 DDR3 Samsung
1101 64bit 128Mx16 DDR3 Qimonda
1110 64bit 128Mx16 DDR3 Hynix
1111 64bit 128Mx16 DDR3 Samsung

0	PD 5k	8	PU 5k
1	PD 10k	9	PU 10k
2	PD 15k	10	PU 15k
3	PD 20k	11	PU 20k
4	PD 25k	12	PU 25k
5	PD 30k	13	PU 30k
6	PD 35k	14	PU 35k
7	PD 45k	15	PU 45k

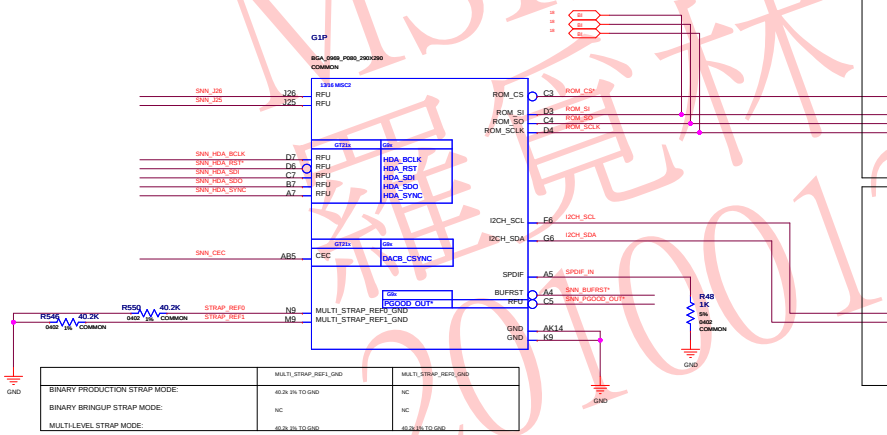

	MULTI_STRAP_REF1_GND	MULTI_STRAP_REF0_GND
BINARY PRODUCTION STRAP MODE:	40.2k 1% TO GND	NC
BINARY BRINGUP STRAP MODE:	NC	NC
MULTI-LEVEL STRAP MODE:	40.2k 1% TO GND	40.2k 1% TO GND

BIOS ROM(serial)

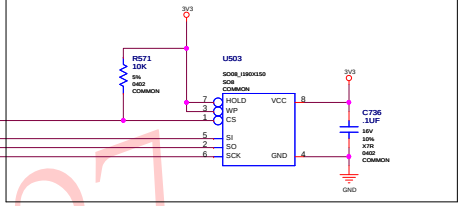

HDCP I2C EEROM

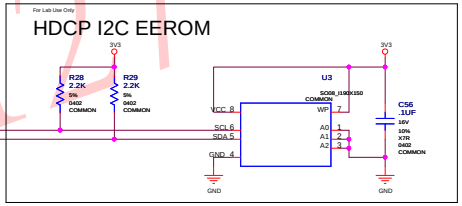

MSIS-RMA 鍵寬林 20100127

ASSEMBLY	BASE LEVEL GENERIC SCHEMATIC ONLY, COMMON & NO_STUFF ASSEMBLY NOTES AND BOM NOT FINAL
PAGE DETAIL	BIOS ROM, HDCP ROM, STRAPPING OPTIONS

ALL NVIDIA DESIGN SPECIFICATIONS, REFERENCE SPECIFICATIONS, REFERENCE BOARDS, FILES, DRAWINGS, DIAGNOSTICS, LISTS AND OTHER DOCUMENTS OR INFORMATION (TOGETHER AND SEPARATELY, 'MATERIALS') ARE BEING PROVIDED 'AS IS'. THE MATERIALS MAY CONTAIN KNOWN AND UNKNOWN VIOLATIONS OR DEVIATIONS OF INDUSTRY STANDARDS AND SPECIFICATIONS. NVIDIA MAKES NO WARRANTIES, EXPRESSED, IMPLIED, STATUTORY OR OTHERWISE WITH RESPECT TO THE MATERIALS OR OTHERWISE, AND EXPRESSLY DISCLAIMS ALL IMPLIED WARRANTIES INCLUDING, WITHOUT LIMITATION, THE WARRANTIES OF DESIGN, OF NONINFRINGEMENT, MERCHANTABILITY OR FITNESS FOR A PARTICULAR PURPOSE, OR ARISING FROM A COURSE OF DEALING, TRADE USAGE, TRADE PRACTICE, OR INDUSTRY STANDARDS.

NVIDIA CORPORATION
2701 SAN TOMAS EXPRESSWAY
SANTA CLARA, CA 95050, USA

NV_PN	600-10681-base-100 A		
ID		PAGE	
NAME		DATE	05-FEB-2009

EXTERNAL THERMAL SENSOR, FAN CONTROL, GPIO, JTAG

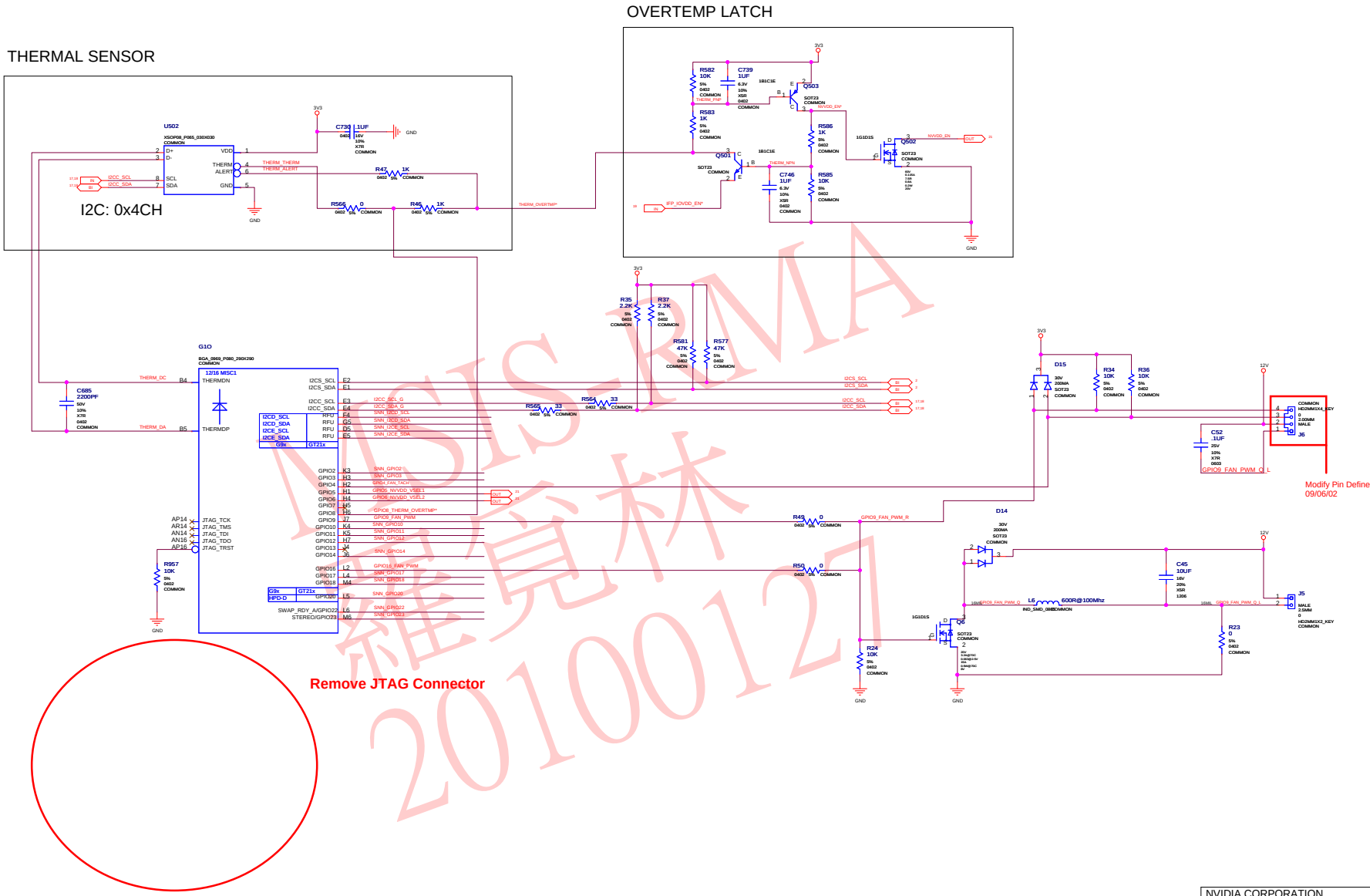

NSIS-PMA
羅覓林
20100127

ASSEMBLY	BASE LEVEL GENERIC SCHEMATIC ONLY, COMMON & NO_STUFF ASSEMBLY NOTES AND BOM NOT FINAL
PAGE DETAIL	EXTERNAL THERMAL SENSOR, FAN CONTROL, GPIO, JTAG

ALL NVIDIA DESIGN SPECIFICATIONS, REFERENCE SPECIFICATIONS, REFERENCE BOARDS, FILES, DRAWINGS, DIAGNOSTICS, LISTS AND OTHER DOCUMENTS OR INFORMATION (TOGETHER AND SEPARATELY, 'MATERIALS') ARE BEING PROVIDED 'AS IS'. THE MATERIALS MAY CONTAIN KNOWN AND UNKNOWN VIOLATIONS OR DEVIATIONS OF INDUSTRY STANDARDS AND SPECIFICATIONS. NVIDIA MAKES NO WARRANTIES, EXPRESSED, IMPLIED, STATUTORY OR OTHERWISE WITH RESPECT TO THE MATERIALS OR OTHERWISE, AND EXPRESSLY DISCLAIMS ALL IMPLIED WARRANTIES INCLUDING, WITHOUT LIMITATION, THE WARRANTIES OF DESIGN, OF NONINFRINGEMENT, MERCHANTABILITY OR FITNESS FOR A PARTICULAR PURPOSE, OR ARISING FROM A COURSE OF DEALING, TRADE USAGE, TRADE PRACTICE, OR INDUSTRY STANDARDS.

NVIDIA CORPORATION
2701 SAN TOMAS EXPRESSWAY
SANTA CLARA, CA 95050, USA

NV_PN	600-10681-base-100 A		
ID		PAGE	
NAME		DATE	05-FEB-2009

XTAL, MECHANICALS, THERMALS

XTAL/GPU_PLLVDD

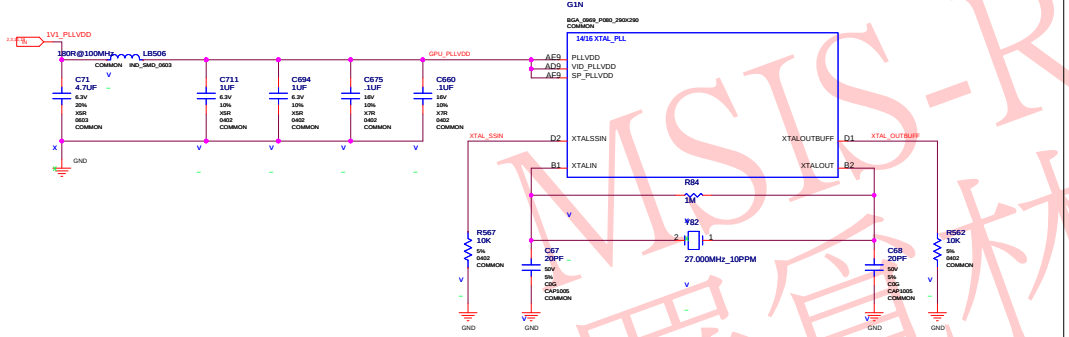

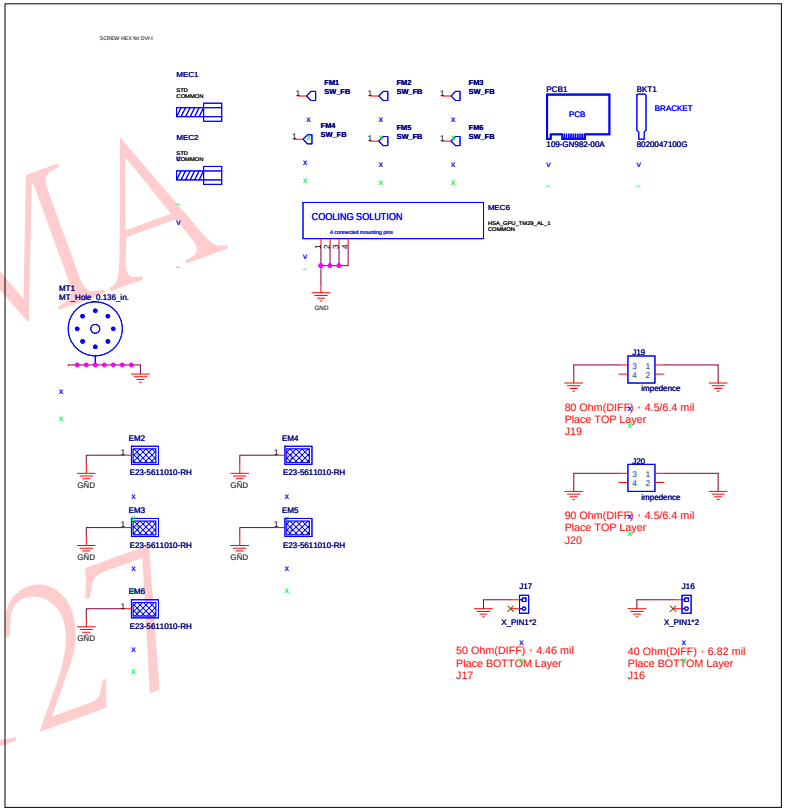

MSIS-RMA
羅覓林
20100127

ASSEMBLY	BASE LEVEL GENERIC SCHEMATIC ONLY, COMMON & NO_STUFF ASSEMBLY NOTES AND BOM NOT FINAL
PAGE DETAIL	XTAL, MECHANICALS, THERMALS

ALL NVIDIA DESIGN SPECIFICATIONS, REFERENCE SPECIFICATIONS, REFERENCE BOARDS, FILES, DRAWINGS, DIAGNOSTICS, LISTS AND OTHER DOCUMENTS OR INFORMATION (TOGETHER AND SEPARATELY, 'MATERIALS') ARE BEING PROVIDED 'AS IS'. THE MATERIALS MAY CONTAIN KNOWN AND UNKNOWN VIOLATIONS OR DEVIATIONS OF INDUSTRY STANDARDS AND SPECIFICATIONS. NVIDIA MAKES NO WARRANTIES, EXPRESSED, IMPLIED, STATUTORY OR OTHERWISE WITH RESPECT TO THE MATERIALS OR OTHERWISE, AND EXPRESSLY DISCLAIMS ALL IMPLIED WARRANTIES INCLUDING, WITHOUT LIMITATION, THE WARRANTIES OF DESIGN, OF NONINFRIINGEMENT, MERCHANTABILITY OR FITNESS FOR A PARTICULAR PURPOSE, OR ARISING FROM A COURSE OF DEALING, TRADE USAGE, TRADE PRACTICE, OR INDUSTRY STANDARDS.

NVIDIA CORPORATION
2701 SAN TOMAS EXPRESSWAY
SANTA CLARA, CA 95050, USA

NV_PN	600-10681-base-100 A		
ID		PAGE	
NAME		DATE	05-FEB-2009

MIOA & MIOB

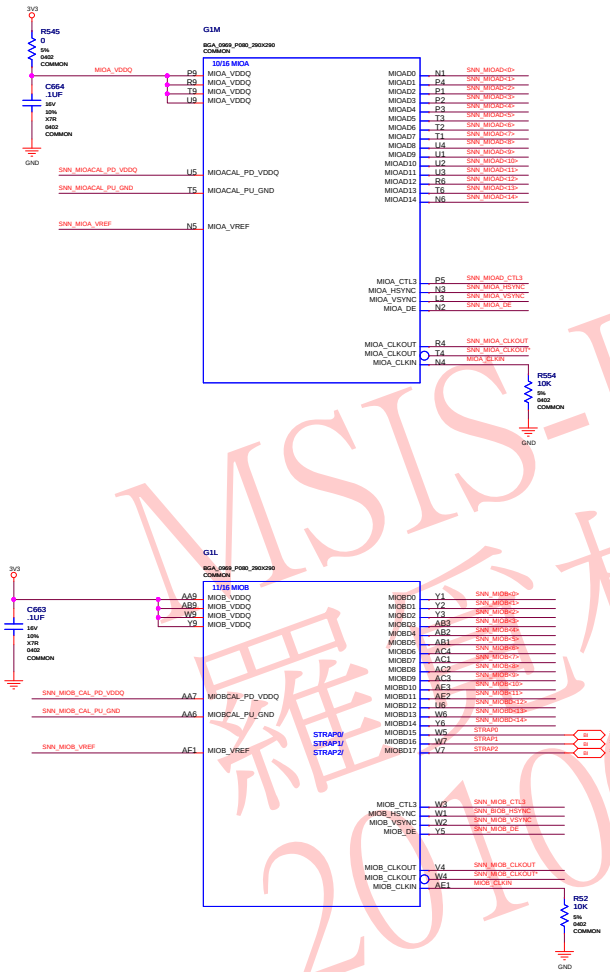

MSIS-RMA
羅金林
20100127

ASSEMBLY	BASE LEVEL GENERIC SCHEMATIC ONLY, COMMON & NO_STUFF ASSEMBLY NOTES AND BOM NOT FINAL
PAGE DETAIL	MIOA & MIOB

ALL NVIDIA DESIGN SPECIFICATIONS, REFERENCE SPECIFICATIONS, REFERENCE BOARDS, FILES, DRAWINGS, DIAGNOSTICS, LISTS AND OTHER DOCUMENTS OR INFORMATION (TOGETHER AND SEPARATELY, 'MATERIALS') ARE BEING PROVIDED 'AS IS'. THE MATERIALS MAY CONTAIN KNOWN AND UNKNOWN VIOLATIONS OR DEVIATIONS OF INDUSTRY STANDARDS AND SPECIFICATIONS. NVIDIA MAKES NO WARRANTIES, EXPRESSED, IMPLIED, STATUTORY OR OTHERWISE WITH RESPECT TO THE MATERIALS OR OTHERWISE, AND EXPRESSLY DISCLAIMS ALL IMPLIED WARRANTIES INCLUDING, WITHOUT LIMITATION, THE WARRANTIES OF DESIGN, OF NONINFRINGEMENT, MERCHANTABILITY OR FITNESS FOR A PARTICULAR PURPOSE, OR ARISING FROM A COURSE OF DEALING, TRADE USAGE, TRADE PRACTICE, OR INDUSTRY STANDARDS.

NVIDIA CORPORATION
2701 SAN TOMAS EXPRESSWAY
SANTA CLARA, CA 95050, USA

NV_PN	600-10681-base-100 A		
ID		PAGE	
NAME		DATE	05-FEB-2009

IFP EF (UNUSED)

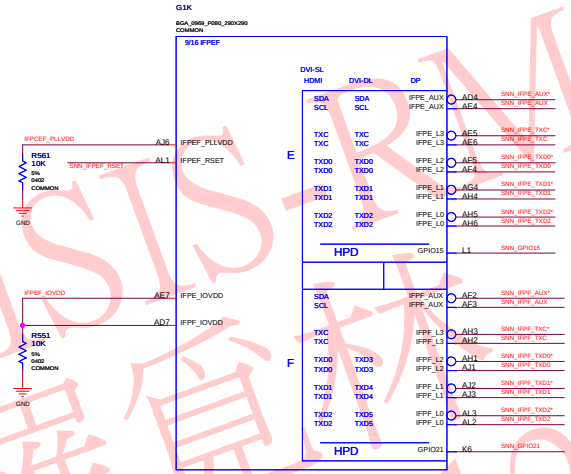

MSI-RMA
羅宣妹
20100127

ASSEMBLY	BASE LEVEL GENERIC SCHEMATIC ONLY, COMMON & NO_STUFF ASSEMBLY NOTES AND BOM NOT FINAL
PAGE DETAIL	IFP EF (UNUSED)

ALL NVIDIA DESIGN SPECIFICATIONS, REFERENCE SPECIFICATIONS, REFERENCE BOARDS, FILES, DRAWINGS, DIAGNOSTICS, LISTS AND OTHER DOCUMENTS OR INFORMATION (TOGETHER AND SEPARATELY, 'MATERIALS') ARE BEING PROVIDED 'AS IS'. THE MATERIALS MAY CONTAIN KNOWN AND UNKNOWN VIOLATIONS OR DEVIATIONS OF INDUSTRY STANDARDS AND SPECIFICATIONS. NVIDIA MAKES NO WARRANTIES, EXPRESSED, IMPLIED, STATUTORY OR OTHERWISE WITH RESPECT TO THE MATERIALS OR OTHERWISE, AND EXPRESSLY DISCLAIMS ALL IMPLIED WARRANTIES INCLUDING, WITHOUT LIMITATION, THE WARRANTIES OF DESIGN, OF NONINFRINGEMENT, MERCHANTABILITY OR FITNESS FOR A PARTICULAR PURPOSE, OR ARISING FROM A COURSE OF DEALING, TRADE USAGE, TRADE PRACTICE, OR INDUSTRY STANDARDS.

NVIDIA CORPORATION
2701 SAN TOMAS EXPRESSWAY
SANTA CLARA, CA 95050, USA

NV_PN	600-10681-base-100 A		
ID		PAGE	
NAME		DATE	05-FEB-2009

IFP D (UNUSED)

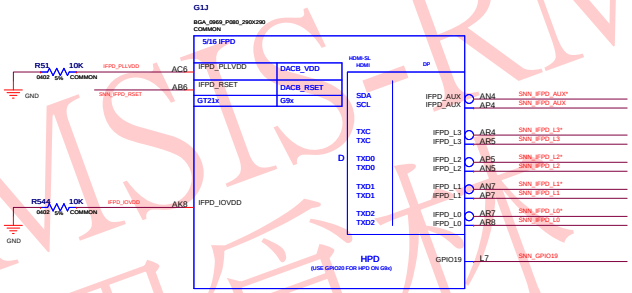

MSIS-RMA
羅覓林
20100127

ASSEMBLY	BASE LEVEL GENERIC SCHEMATIC ONLY, COMMON & NO_STUFF ASSEMBLY NOTES AND BOM NOT FINAL
PAGE DETAIL	IFP D (UNUSED)

ALL NVIDIA DESIGN SPECIFICATIONS, REFERENCE SPECIFICATIONS, REFERENCE BOARDS, FILES, DRAWINGS, DIAGNOSTICS, LISTS AND OTHER DOCUMENTS OR INFORMATION (TOGETHER AND SEPARATELY, 'MATERIALS') ARE BEING PROVIDED 'AS IS'. THE MATERIALS MAY CONTAIN KNOWN AND UNKNOWN VIOLATIONS OR DEVIATIONS OF INDUSTRY STANDARDS AND SPECIFICATIONS. NVIDIA MAKES NO WARRANTIES, EXPRESSED, IMPLIED, STATUTORY OR OTHERWISE WITH RESPECT TO THE MATERIALS OR OTHERWISE, AND EXPRESSLY DISCLAIMS ALL IMPLIED WARRANTIES INCLUDING, WITHOUT LIMITATION, THE WARRANTIES OF DESIGN, OF NONINFRINGEMENT, MERCHANTABILITY OR FITNESS FOR A PARTICULAR PURPOSE, OR ARISING FROM A COURSE OF DEALING, TRADE USAGE, TRADE PRACTICE, OR INDUSTRY STANDARDS.

NVIDIA CORPORATION
2701 SAN TOMAS EXPRESSWAY
SANTA CLARA, CA 95050, USA

NV_PN	600-10681-base-100 A		
ID		PAGE	
NAME		DATE	05-FEB-2009

IFP C (NORTH HDMI)

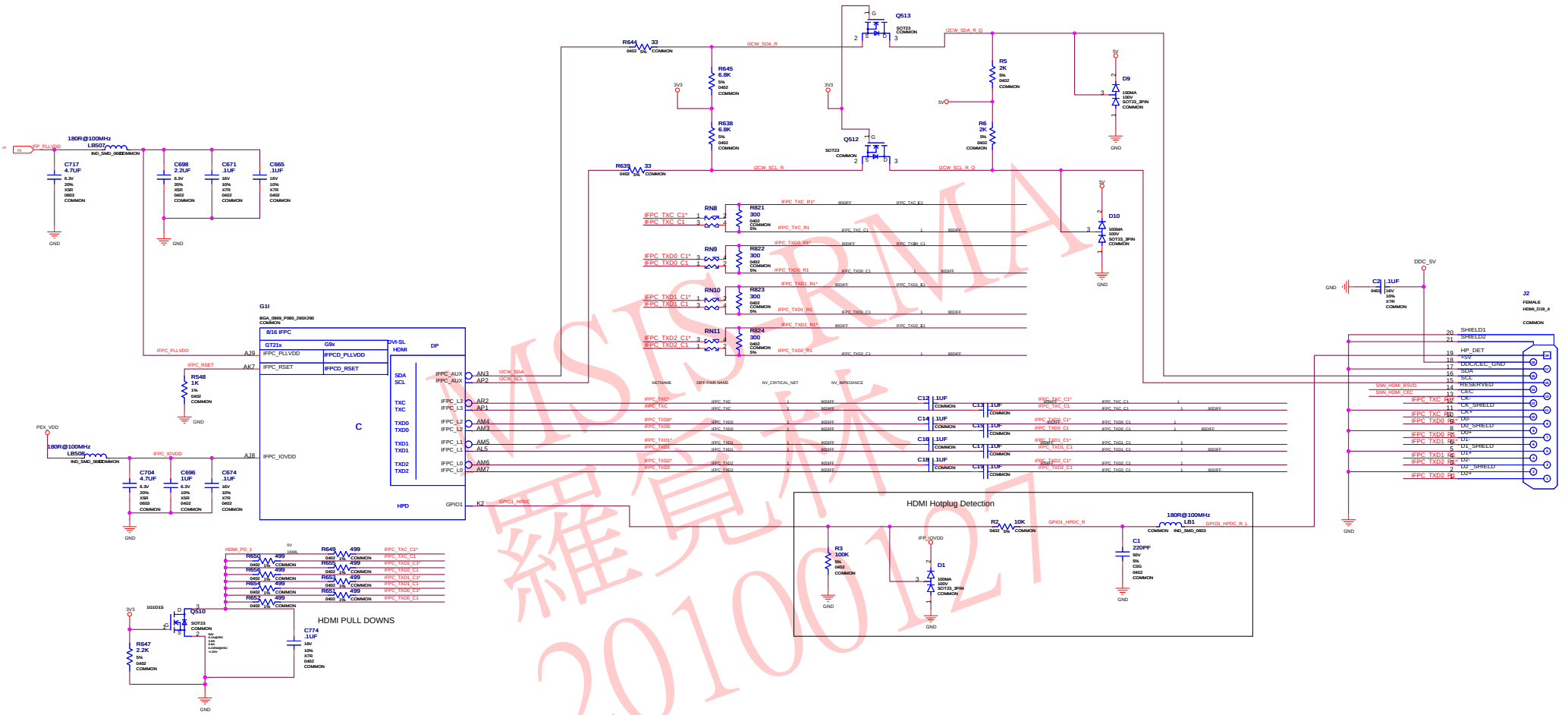

ALL NVIDIA DESIGN SPECIFICATIONS, REFERENCE SPECIFICATIONS, REFERENCE BOARDS, FILES, DRAWINGS, DIAGNOSTICS, LISTS AND OTHER DOCUMENTS OR INFORMATION (TOGETHER AND SEPARATELY, 'MATERIALS') ARE BEING PROVIDED 'AS IS'. THE MATERIALS MAY CONTAIN KNOWN AND UNKNOWN VIOLATIONS OR DEVIATIONS OF INDUSTRY STANDARDS AND SPECIFICATIONS. NVIDIA MAKES NO WARRANTIES, EXPRESSED, IMPLIED, STATUTORY OR OTHERWISE WITH RESPECT TO THE MATERIALS OR OTHERWISE, AND EXPRESSLY DISCLAIMS ALL IMPLIED WARRANTIES INCLUDING, WITHOUT LIMITATION, THE WARRANTIES OF DESIGN, OF NONINFRINGEMENT, MERCHANTABILITY OR FITNESS FOR A PARTICULAR PURPOSE, OR ARISING FROM A COURSE OF DEALING, TRADE USAGE, TRADE PRACTICE, OR INDUSTRY STANDARDS.

ASSEMBLY	BASE LEVEL GENERIC SCHEMATIC ONLY, COMMON & NO_STUFF ASSEMBLY NOTES AND BOM NOT FINAL
PAGE DETAIL	IFP C (NORTH HDMI)

NVIDIA CORPORATION
2701 SAN TOMAS EXPRESSWAY
SANTA CLARA, CA 95050, USA

NV_PN	600-10681-base-100 A		
ID		PAGE	
NAME		DATE	05-FEB-2009

NVIDIA CONFIDENTIAL
20100127

IFP AB (SOUTH DVI-I)

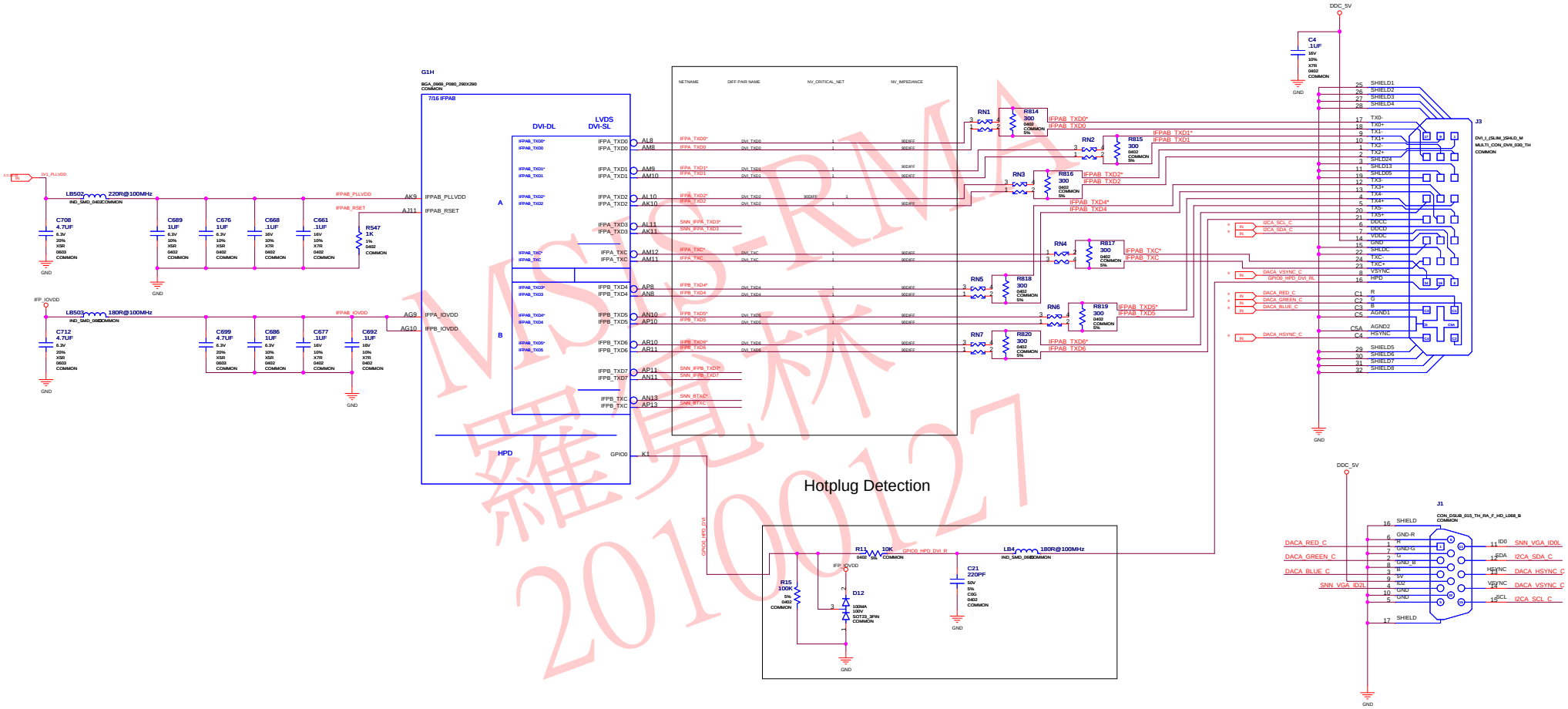

MSTS-RMA
羅貴林
20100127

ASSEMBLY	BASE LEVEL GENERIC SCHEMATIC ONLY, COMMON & NO_STUFF ASSEMBLY NOTES AND BOM NOT FINAL
PAGE DETAIL	IFP AB (SOUTH DVI-I)

ALL NVIDIA DESIGN SPECIFICATIONS, REFERENCE SPECIFICATIONS, REFERENCE BOARDS, FILES, DRAWINGS, DIAGNOSTICS, LISTS AND OTHER DOCUMENTS OR INFORMATION (TOGETHER AND SEPARATELY, 'MATERIALS') ARE BEING PROVIDED 'AS IS'. THE MATERIALS MAY CONTAIN KNOWN AND UNKNOWN VIOLATIONS OR DEVIATIONS OF INDUSTRY STANDARDS AND SPECIFICATIONS. NVIDIA MAKES NO WARRANTIES, EXPRESSED, IMPLIED, STATUTORY OR OTHERWISE WITH RESPECT TO THE MATERIALS OR OTHERWISE, AND EXPRESSLY DISCLAIMS ALL IMPLIED WARRANTIES INCLUDING, WITHOUT LIMITATION, THE WARRANTIES OF DESIGN, OF NONINFRINGEMENT, MERCHANTABILITY OR FITNESS FOR A PARTICULAR PURPOSE, OR ARISING FROM A COURSE OF DEALING, TRADE USAGE, TRADE PRACTICE, OR INDUSTRY STANDARDS.

NVIDIA CORPORATION
2701 SAN TOMAS EXPRESSWAY
SANTA CLARA, CA 95050, USA

NV_PN	600-10681-base-100 A		
ID		PAGE	
NAME		DATE	05-FEB-2009

DACB (MID VGA)

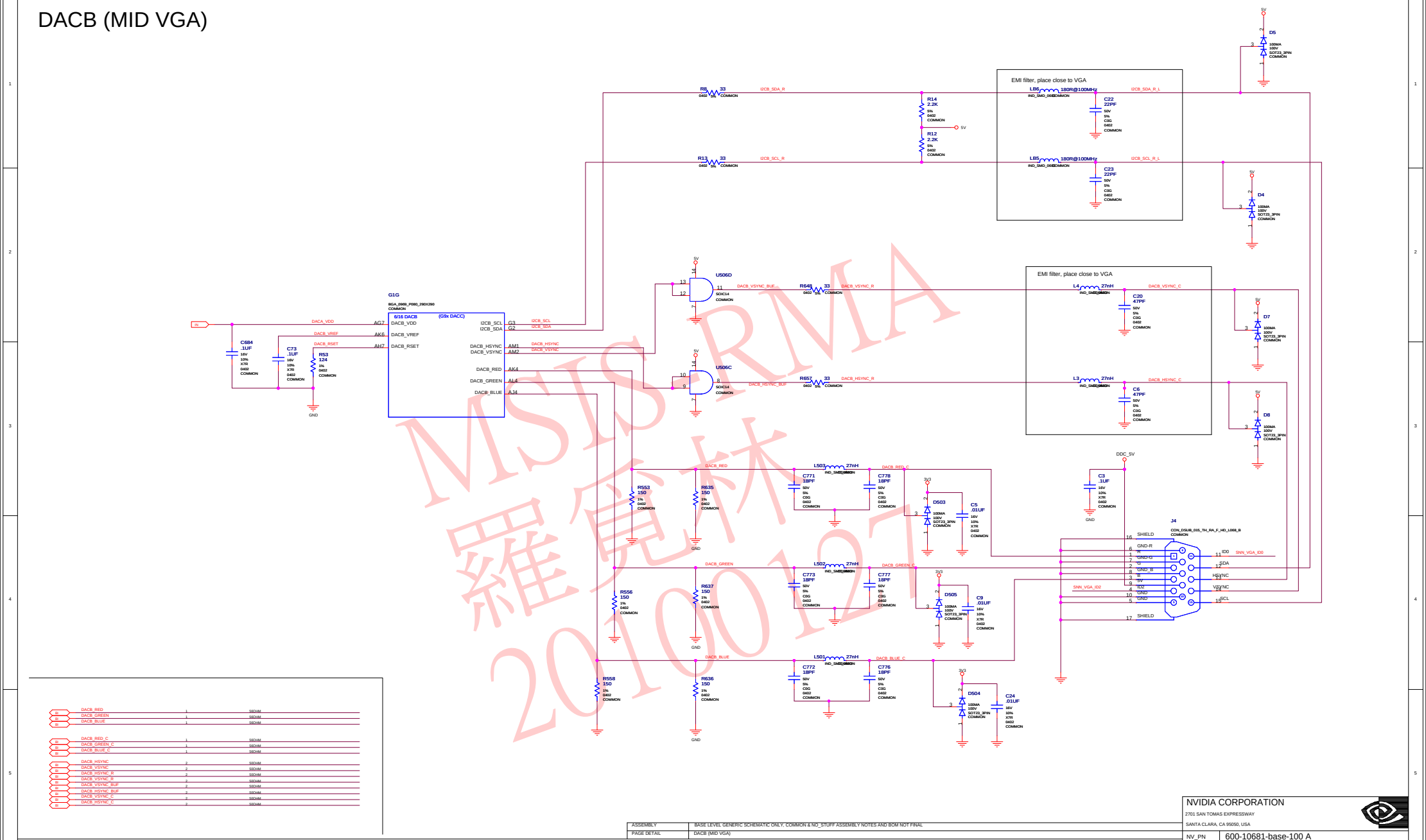

MSIS-RMA
羅覓林
20100127

ASSEMBLY	BASE LEVEL GENERIC SCHEMATIC ONLY, COMMON & NO_STUFF ASSEMBLY NOTES AND BOM NOT FINAL
PAGE DETAIL	DACB (MID VGA)

ALL NVIDIA DESIGN SPECIFICATIONS, REFERENCE SPECIFICATIONS, REFERENCE BOARDS, FILES, DRAWINGS, DIAGNOSTICS, LISTS AND OTHER DOCUMENTS OR INFORMATION (TOGETHER AND SEPARATELY, 'MATERIALS') ARE BEING PROVIDED 'AS IS'. THE MATERIALS MAY CONTAIN KNOWN AND UNKNOWN VIOLATIONS OR DEVIATIONS OF INDUSTRY STANDARDS AND SPECIFICATIONS. NVIDIA MAKES NO WARRANTIES, EXPRESSED, IMPLIED, STATUTORY OR OTHERWISE WITH RESPECT TO THE MATERIALS OR OTHERWISE, AND EXPRESSLY DISCLAIMS ALL IMPLIED WARRANTIES INCLUDING, WITHOUT LIMITATION, THE WARRANTIES OF DESIGN, OF NONINFRINGEMENT, MERCHANTABILITY OR FITNESS FOR A PARTICULAR PURPOSE, OR ARISING FROM A COURSE OF DEALING, TRADE USAGE, TRADE PRACTICE, OR INDUSTRY STANDARDS.

NVIDIA CORPORATION
2701 SAN TOMAS EXPRESSWAY
SANTA CLARA, CA 95050, USA

NV_PN	600-10681-base-100 A		
ID		PAGE	
NAME		DATE	05-FEB-2009

P681-A01 GT215/216 DESKTOP GB1-128 DDR3
PCI-EXPRESSx16 DL-DVI VGA HDMI

Page 1: P681-A01 OVERVIEW
Page 2: PCI-EXPRESS INTERFACE
Page 3: PARTITION A FRAME BUFFER INTERFACE
Page 4: PARTITION A MEMORIES
Page 5: FBA DECOUPLING CAPS & NVVDD DECOUPLING CAPS
Page 6: PARTITION C FRAME BUFFER INTERFACE
Page 7: PARTITION C MEMORIES
Page 8: FBC DECOUPLING CAPS
Page 9: DACA (SOUTH DVI-I)
Page 10: DACB (MID VGA)
Page 11: IFP AB (SOUTH DVI-I)
Page 12: IFP C (NORTH HDMI)
Page 13: IFP D (UNUSED)
Page 14: IFP EF (UNUSED)
Page 15: MIOA & MIOB
Page 16: XTAL, MECHANICALS, THERMALS
Page 17: EXTERNAL THERMAL SENSOR, FAN CONTROL, GPIO, JTAG
Page 18: BIOS ROM, HDCP ROM, STRAPPING OPTIONS
Page 19: LINEAR POWER SUPPLIES
Page 20: FBVDDQ/PEXVDD POWER SUPPLY
Page 21: NVVDD POWER SUPPLY

V199 For Lenovo Schematic Change List 2009/03/31 by STEVEN CHANG

Page 2: Remove JTAG Component

Page 10: Move J1 D-SUB Connector to Page 11

Page 11: Add Slim Type D-SUB Connector

Page 17: Remove JTAG Connector

Page 19: Remove IFP_PLLVDD SUPPLY LDO IC

Page 19: Add UP7706 LDO to Change PEX_VDD Power Supply

Page 19: Change AP1117 LDO External Schematic Design

Page 20: Change UP6161 PWM IC to use
UP6101 PWM IC Solution For FBVDDQ Power Supply

Page 20: Change UP6210 PWM IC to use
RT9232 PWM IC Solution For NVVDD Power Supply

Page 20: Remove NVVDD SENSE Net

MSI S-RMA
羅覺林
20100127

BOM	VARIANT	NVPN	ASSEMBLY
B	BASE	600-10681-base-100	BASE LEVEL GENERIC SCHEMATIC ONLY, COMMON & NO_STUFF ASSEMBLY NOTES AND BOM NOT FINAL
1	SKU0001	600-10681-0001-100	GT216-300 600/1500MHz 1024MB 64Mx16 BGA100 800MHz DDR3 DVI-I/VGA/HDMI
2	SKU0002	600-10681-0002-100.	GT216-300 600/1500MHz 1024MB 64Mx16 BGA100 1000MHz DDR3 DVI-I/VGA/HDMI
3	SKU0011	600-10681-0011-100	GT215-300 600/1500MHz 1024MB 64Mx16 BGA100 900MHz DDR3 DVI-I/VGA/HDMI
4	<UNDEFINED>	<UNDEFINED>	<UNDEFINED>
5	<UNDEFINED>	<UNDEFINED>	<UNDEFINED>
6	<UNDEFINED>	<UNDEFINED>	<UNDEFINED>
7	<UNDEFINED>	<UNDEFINED>	<UNDEFINED>
8	<UNDEFINED>	<UNDEFINED>	<UNDEFINED>
9	<UNDEFINED>	<UNDEFINED>	<UNDEFINED>
10	<UNDEFINED>	<UNDEFINED>	<UNDEFINED>
11	<UNDEFINED>	<UNDEFINED>	<UNDEFINED>
12	<UNDEFINED>	<UNDEFINED>	<UNDEFINED>
13	<UNDEFINED>	<UNDEFINED>	<UNDEFINED>
14	<UNDEFINED>	<UNDEFINED>	<UNDEFINED>
15	<UNDEFINED>	<UNDEFINED>	<UNDEFINED>

ASSEMBLY	BASE LEVEL GENERIC SCHEMATIC ONLY, COMMON & NO_STUFF ASSEMBLY NOTES AND BOM NOT FINAL
PAGE DETAIL	P681-A01 OVERVIEW

ALL NVIDIA DESIGN SPECIFICATIONS, REFERENCE SPECIFICATIONS, REFERENCE BOARDS, FILES, DRAWINGS, DIAGNOSTICS, LISTS AND OTHER DOCUMENTS OR INFORMATION (TOGETHER AND SEPARATELY, 'MATERIALS') ARE BEING PROVIDED 'AS IS'. THE MATERIALS MAY CONTAIN KNOWN AND UNKNOWN VIOLATIONS OR DEVIATIONS OF INDUSTRY STANDARDS AND SPECIFICATIONS. NVIDIA MAKES NO WARRANTIES, EXPRESSED, IMPLIED, STATUTORY OR OTHERWISE WITH RESPECT TO THE MATERIALS OR OTHERWISE, AND EXPRESSLY DISCLAIMS ALL IMPLIED WARRANTIES INCLUDING, WITHOUT LIMITATION, THE WARRANTIES OF DESIGN, OF NONINFRINGEMENT, MERCHANTABILITY OR FITNESS FOR A PARTICULAR PURPOSE, OR ARISING FROM A COURSE OF DEALING, TRADE USAGE, TRADE PRACTICE, OR INDUSTRY STANDARDS.

NVIDIA CORPORATION
2701 SAN TOMAS EXPRESSWAY
SANTA CLARA, CA 95050, USA

NV_PN	600-10681-base-100 A		
ID		PAGE	
NAME		DATE	05-FEB-2009

FBVDDQ POWER SUPPLY

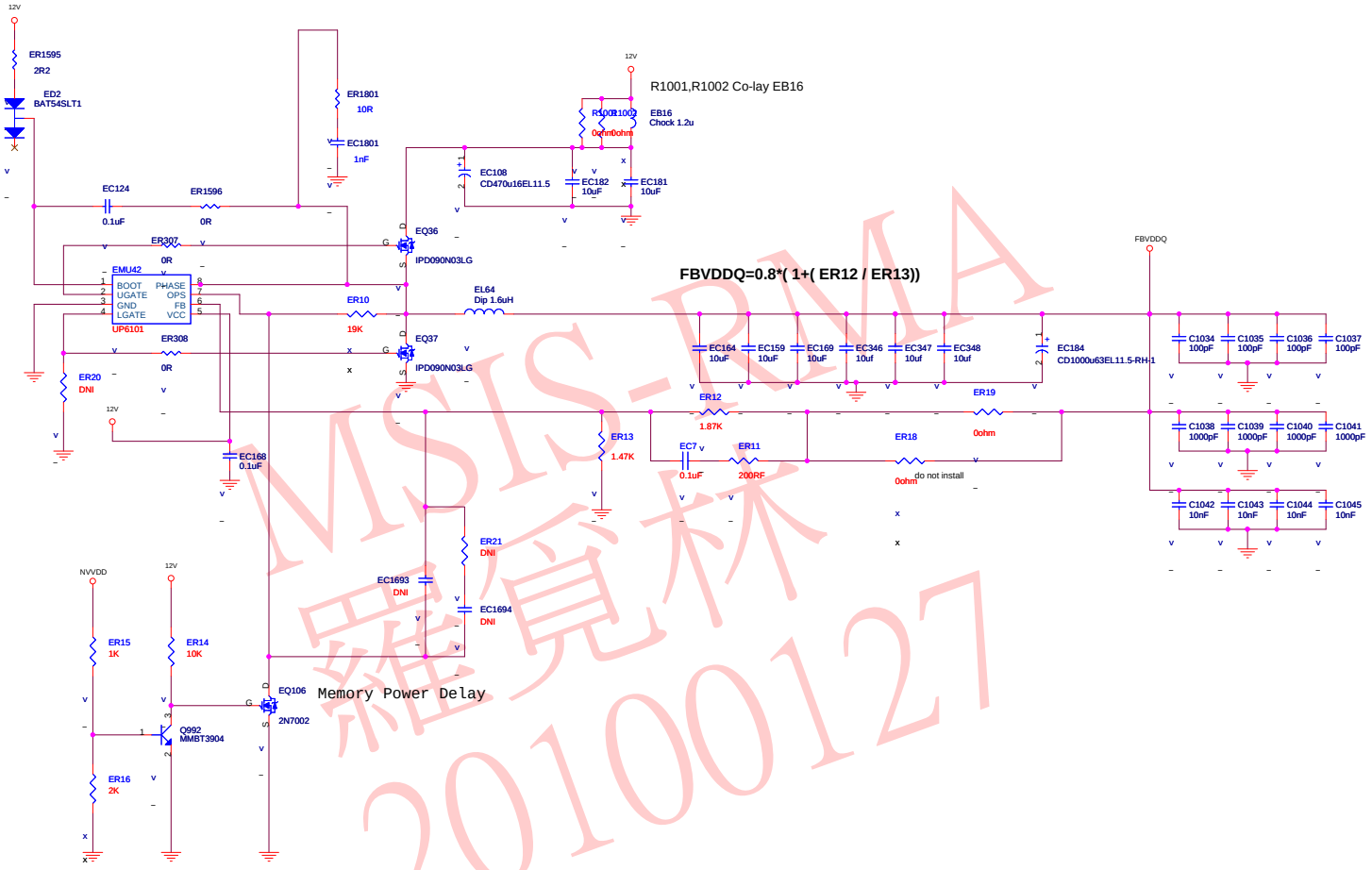

MSI-RMA
羅覺林
20100127

CONFIDENTIAL & PROPRIETARY TO ADVANCED MICRO DEVICES INC.
©2007 Advanced Micro Devices
This AMD Board schematic and design is the exclusive property of AMD, and is provided only to entities under a non-disclosure agreement with AMD for evaluation purposes. Further distribution or disclosure is strictly prohibited. Use of this schematic and design for any purpose other than evaluation requires a Board Technology License Agreement with AMD. AMD makes no representations or warranties of any kind regarding this schematic and design, including, not limited to, any implied warranty of merchantability or fitness for a particular purpose, and disclaims responsibility forany consequences resulting from use of the information included herein.

Advanced Micro Devices Inc.
1 Commerce Valley Drive East
Markham, Ontario

Date:	Friday, June 26, 2009
Rev	0
Sheet	13 of 24
Title	RH RV730 512MB DDR2 DL-DVI DP HDMI FH 6'
Doc No.	105-B665xx-00A