Sheet #	Content	Sheet #	Content
1	Contents Table		
5	MSM8909_CONTROL_1		
6	MSM8909_CONTROL_2		
7	MSM8909_GPIO		
8	MSM8909_POWER_1		
9	MSM8909_POWER_2		
10	MSM8909_GND		
11	PM8909_CONTROL_1		
12	PM8909_CONTROL_2		
13	PM8909_POWER		
14	AUDIO		
15	SENSORS		
16	MEMORY		
17	MULTIMEDIA		
18	INTERFACE		
19	NFC		
30	PRIMARY_ANTENNA_TUNER		
31	MMPA_RF7460		
32	BAND7_B28_TX		
33	DUPLEXERS		
34	GSM_RX_LB_TX		
35	DRX		
36	WTR4905		
37	QFE2101		
38	RF_GPS		
39	WCN3610		

Title

Sheet

Size | Name | Rev

Date: | Sheet of

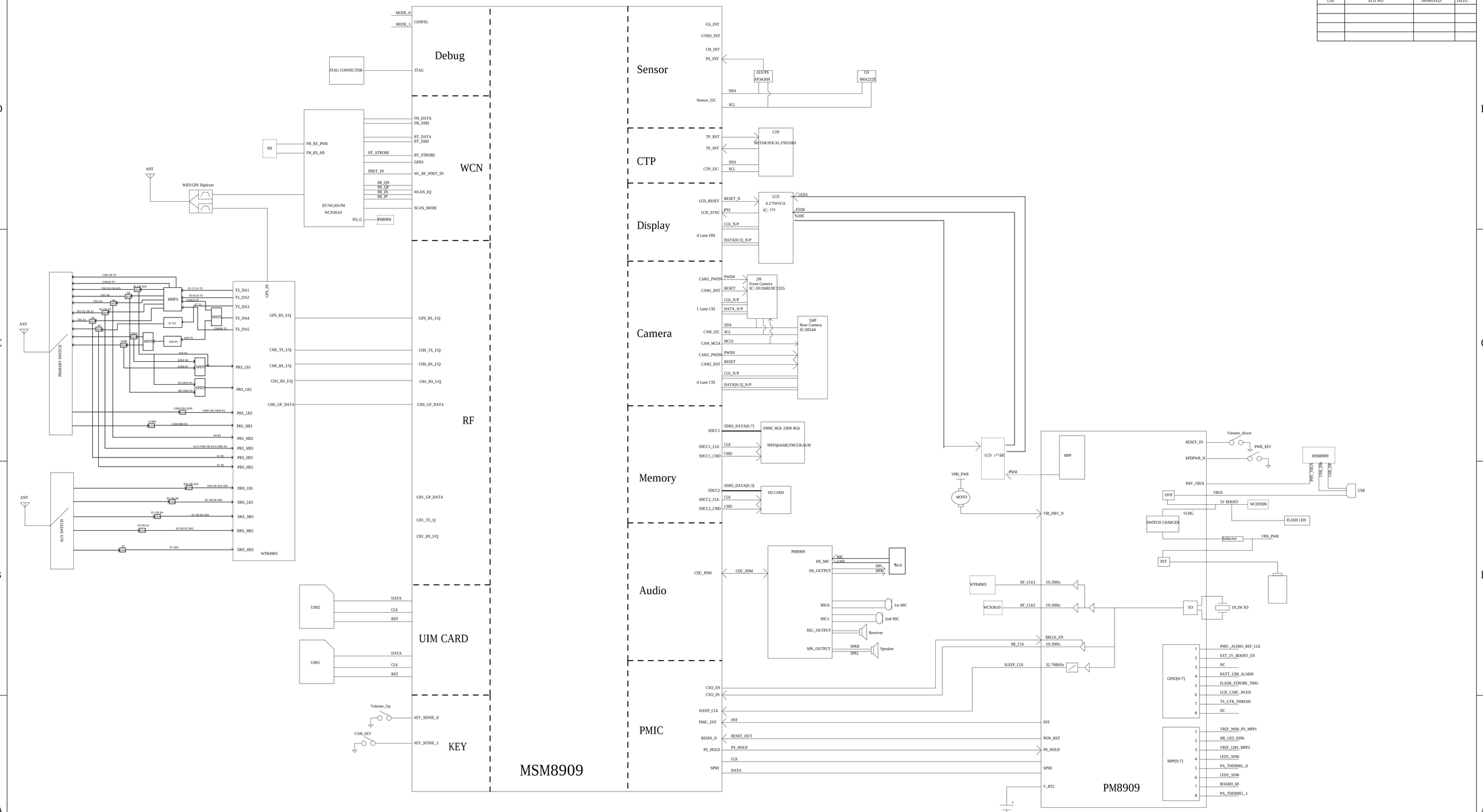

REVISION RECORD			
LTR	ECO NO:	APPROVED:	DATE:

DRAWN: <Drawn By>	DATED: <Drawn Date>
CHECKED: <Checked By>	DATED: <Checked Date>
QUALITY CONTROL: <QC By>	DATED: <QC Date>
RELEASED: <Released By>	DATED: <Release Date>

COMPANY: <Company Name>

TITLE: <Title>

CODE:	SIZE:	DRAWING NO:	REV:
<Code>	D	<Drawing Number>	<Revision>

SCALE: <Scale> SHEET: 3 OF 27

REVISION RECORD			
LTR	ECO NO:	APPROVED:	DATE:

U0501-A

Note5
WCSS_XO can be grounded
It is required only for 5GHz

WLAN_XO AA6
CXO Y25
CXO_EN AA25
SLEEP_CLK AA26
RESIN F26
RESOUT AD2
MODE_0 AD26
MODE_1 AD27
PS_HOLD AA27
SRST H4
TCK F1
TDI G2
TDO G4
TMS H3
TRST G3
EBI_VREF_CA F12
EBI_VREF_DXX G21
DNC_15 W26
DNC_14 AC26
DNC_13 AR26

BB_CLK [9]
RFCLK_MSM_EN [9]
SLEEP_CLK [9]
MSM_RESIN_N [9]
MSM_RESOUT_N [14]
[9] PS_HOLD
C0522 C0201_10NF
VREF_LPDDR3 [9,14]
C0502 C0201_100NF_6.3V_K

SDC2_CLK B1 — SDC2_SDCARD_CLK [14]
SDC2_CMD A7 — SDC2_SDCARD_CMD [14]
SDC2_DATA_0 B7 — SDC2_SDCARD_D0 [14]
SDC2_DATA_1 C1 — SDC2_SDCARD_D1 [14]
SDC2_DATA_2 B3 — SDC2_SDCARD_D2 [14]
SDC2_DATA_3 C7 — SDC2_SDCARD_D3 [14]
R0201_33R R0512

USB_HS_DM V29 — USB_HS_D_M [16]
USB_HS_DP U29 — USB_HS_D_P [16]
Note3
90ohm Diff Imp routing for USB
USB_HS_ID T27
USB_HS_REXT V28 — R0505 R0201_200R_F
DNC_12 W25
Note2
Place R1103 close to MSM pin

PMIC_SPMI_CLK AC29 — SPMI_CLK [9]
PMIC_SPMI_DATA AD29 — SPMI_DATA [9]

R0501 R0201_10K_F
TP_1.0
R0502 R0201_1K_F
TP_1.0
R0503
TP_1.0
UART_MSM_TX [5]
FORCE_USB_BOOT [5]
VREG_L5_1P8
[5,6,11,12,14,18,19,25,27]

U0501-8

Note1
Place R1201 close to MSM Pin

EBI0_CS0_N [14] — EBI_CS0_N A5
EBI0_CS1_N [14] — EBI_CS1_N B5
EBI0_CLK_C [14] — EBI_CKB C10
EBI0_CLK_T [14] — EBI_CK D10
EBI0_CKE0 [14] — EBI_CKE_0 B4
EBI0_CKE1 [14] — EBI_CKE_1 A4
EBI0_DM0 — EBI_DM_0 B18
EBI0_DM1 — EBI_DM_1 B19
EBI0_DM2 — EBI_DM_2 A13
EBI0_DM3 — EBI_DM_3 A23
EBI0_DQS0_C [14] — EBI_DQSB_0 D18
EBI0_DQS0_T [14] — EBI_DQS_0 C18
EBI0_DQS1_C [14] — EBI_DQSB_1 C22
EBI0_DQS1_T [14] — EBI_DQS_1 D22
EBI0_DQS2_C [14] — EBI_DQSB_2 C12
EBI0_DQS2_T [14] — EBI_DQS_2 D13
EBI0_DQS3_C [14] — EBI_DQSB_3 C25
EBI0_DQS3_T [14] — EBI_DQS_3 D25
EBI0_CA0 — EBI_CA_0 B8
EBI0_CA1 — EBI_CA_1 A8
EBI0_CA2 — EBI_CA_2 A7
EBI0_CA3 — EBI_CA_3 B7
EBI0_CA4 — EBI_CA_4 B6
EBI0_CA5 — EBI_CA_5 C9
EBI0_CA6 — EBI_CA_6 C7
EBI0_CA7 — EBI_CA_7 D9
EBI0_CA8 — EBI_CA_8 C6
EBI0_CA9 — EBI_CA_9 D7

EBI_CAL_REXT G6 — R0503 R0201_240R_F

EBI_DQ_0 B14 — EBI0_DQ0 [14]
EBI_DQ_1 B16 — EBI0_DQ1 [14]
EBI_DQ_2 D19 — EBI0_DQ2 [14]
EBI_DQ_3 B15 — EBI0_DQ3 [14]
EBI_DQ_4 C19 — EBI0_DQ4 [14]
EBI_DQ_5 B17 — EBI0_DQ5 [14]
EBI_DQ_6 A17 — EBI0_DQ6 [14]
EBI_DQ_7 A16 — EBI0_DQ7 [14]
EBI_DQ_8 B20 — EBI0_DQ8 [14]
EBI_DQ_9 A20 — EBI0_DQ9 [14]
EBI_DQ_10 A19 — EBI0_DQ10 [14]
EBI_DQ_11 D21 — EBI0_DQ11 [14]
EBI_DQ_12 B22 — EBI0_DQ12 [14]
EBI_DQ_13 C21 — EBI0_DQ13 [14]
EBI_DQ_14 B21 — EBI0_DQ14 [14]
EBI_DQ_15 A22 — EBI0_DQ15 [14]
EBI_DQ_16 A10 — EBI0_DQ16 [14]
EBI_DQ_17 C13 — EBI0_DQ17 [14]
EBI_DQ_18 B11 — EBI0_DQ18 [14]
EBI_DQ_19 B10 — EBI0_DQ19 [14]
EBI_DQ_20 A11 — EBI0_DQ20 [14]
EBI_DQ_21 B12 — EBI0_DQ21 [14]
EBI_DQ_22 B13 — EBI0_DQ22 [14]
EBI_DQ_23 D14 — EBI0_DQ23 [14]
EBI_DQ_24 C24 — EBI0_DQ24 [14]
EBI_DQ_25 B25 — EBI0_DQ25 [14]
EBI_DQ_26 B23 — EBI0_DQ26 [14]
EBI_DQ_27 A25 — EBI0_DQ27 [14]
EBI_DQ_28 D24 — EBI0_DQ28 [14]
EBI_DQ_29 A26 — EBI0_DQ29 [14]
EBI_DQ_30 B27 — EBI0_DQ30 [14]
EBI_DQ_31 B26 — EBI0_DQ31 [14]

A1 QL620_B8
J2 QL620_DC
K1 QL620_RF_MAIN
HJ1 QL620_WIFI
SD1 QL620_RF1
A2 QL620_RF_2101

DRAWN: Zhuyuan Zhao <Drawn By>	DATED: <Drawn Date>	COMPANY: <Company Name>	
CHECKED: <Checked By>	DATED: <Checked Date>	TITLE: <Title>	
QUALITY CONTROL: <QC By>	DATED: <QC Date>	CODE: <Code>	SIZE: D
RELEASED: <Released By>	DATED: <Release Date>	DRAWING NO: <Drawing Number>	REV: <Revision>
		SCALE: <Scale>	SHEET: 3 of 27

MSM8909_CONTROL_2

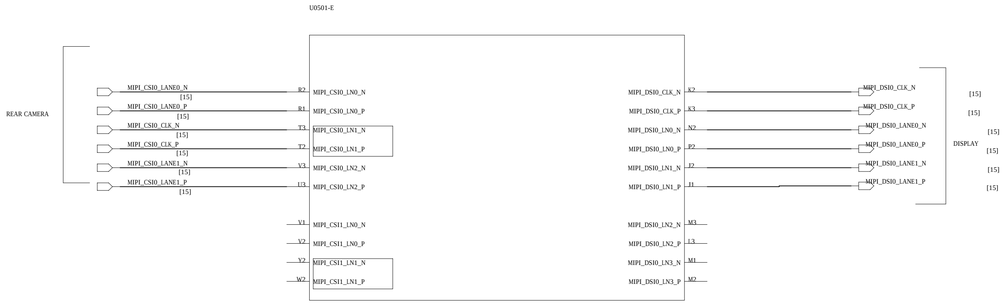

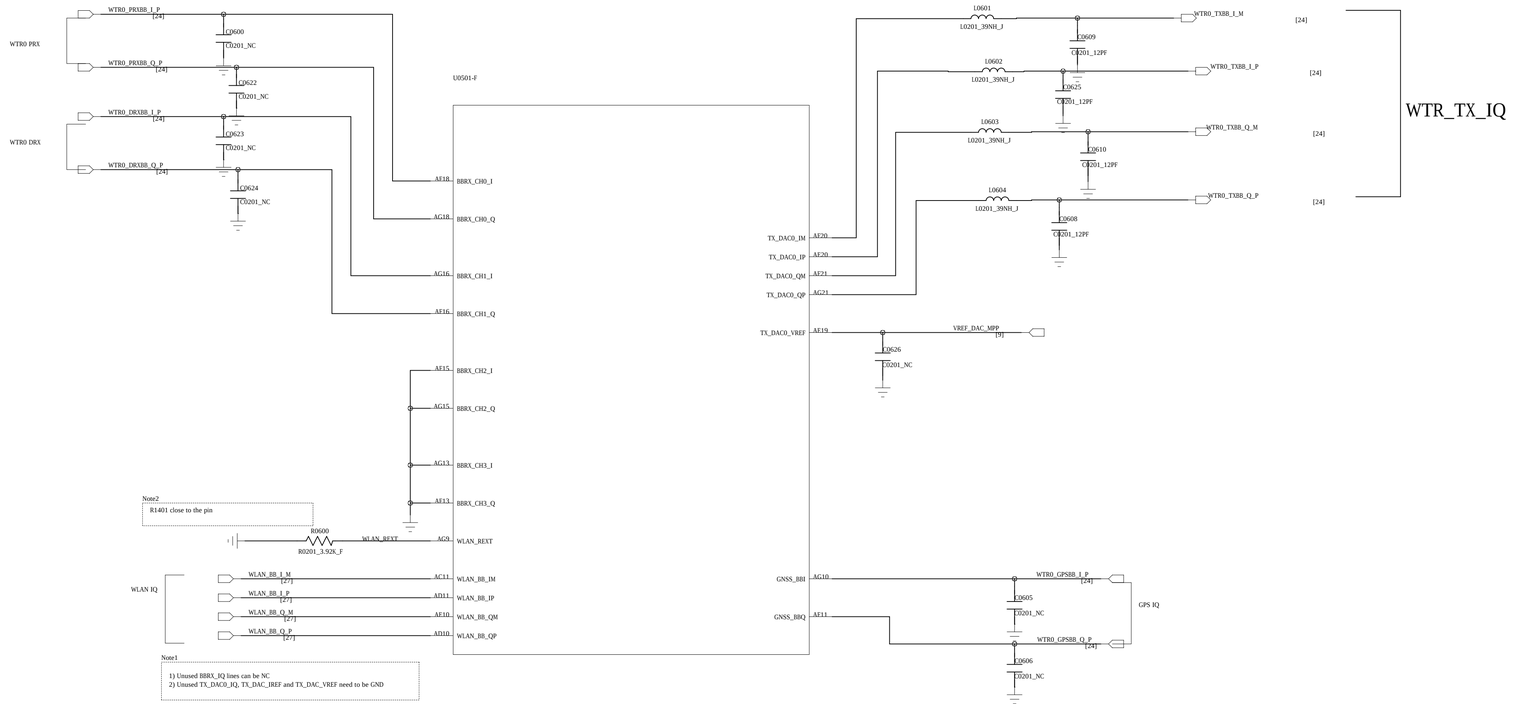

Title

Sheet

Size | Name | Rev

Date: | Sheet of

REVISION RECORD			
LTR	ECO NO:	APPROVED:	DATE:

U0501-C

		AF29	GPIO_0		
		AF28	GPIO_1		
		AE27	GPIO_2		
		AF28	GPIO_3		
[3]	UART_MSM_TX	AF2	GPIO_4		
		AF2	GPIO_5		
[5,13,16]	SENSOR_I2C_SDA	AF1	GPIO_6		
[5,13,16]	SENSOR_I2C_SCL	AG1	GPIO_7		
		F28	GPIO_8		
		G28	GPIO_9		
		H28	GPIO_10		
[13]	MAG_INT_N	F29	GPIO_11		
[13]	TP_RST_N	K28	GPIO_12		
[13]	TP_INT_N	L28	GPIO_13		
		L29	GPIO_14		
[15]	MIPI_SWITCH_SEL	M29	GPIO_15		
[15]	FLASH_EN_IC	F4	GPIO_16		
[15]	TORCH_EN_IC	F2	GPIO_17		
[5,13]	TP_I2C_SDA	E1	GPIO_18		
[5,13]	TP_I2C_SCL	E2	GPIO_19		
		N25	GPIO_20		
		P25	GPIO_21		
[15]	BACK_CAM_ID	P26	GPIO_22		
[15]	LCD_ID0	P27	GPIO_23		
[15]	LCD_TE0	H2	GPIO_24		
[15]	LCD_RST_N	H1	GPIO_25		
[15]	CAM0_MCLK R0201_33R R0714	AC2	GPIO_26		
[15]	CAM1_MCLK R0201_33R R0715	AC1	GPIO_27		
[15]	CAM1_RST_N	AB2	GPIO_28		
[5,15]	CAM_I2C_SDA	AB3	GPIO_29		
[5,15]	CAM_I2C_SCL	AB4	GPIO_30		
		Y4	GPIO_31		
		AA4	GPIO_32		
[15]	CAM1_STANDBY_N	Y3	GPIO_33		
[15]	CAM0_STANDBY_N	AA2	GPIO_34		
[15]	CAM0_RST_N	AA1	GPIO_35		
[13]	ALSP_INT_N	F4	GPIO_36		
		GPIO_37	D2	FORCE_USB_BOOT	[3]
		GPIO_38	J4		
		GPIO_39	AG5	WCSS_BT_SSBI	[27]
		GPIO_40	AF5	WCSS_WLAN_DATA_2	[27]
		GPIO_41	AD6	WCSS_WLAN_DATA_1	[27]
		GPIO_42	AF4	WCSS_WLAN_DATA_0	[27]
		GPIO_43	AE5	WCSS_WLAN_SET	[27]
		GPIO_44	AD5	WCSS_WLAN_CLK	[27]
		GPIO_45	AF3	WCSS_FM_SSBI	[27]
		GPIO_46	AG2	WCSS_FM_SDI	[27]
		GPIO_47	AE4	WCSS_BT_CTRL	[27]
		GPIO_48	AG3	WCSS_BT_DAT_STB	[27]
		GPIO_49	P29	UIM2_DATA	[16]
		GPIO_50	R29	UIM2_CLK	[16]
		GPIO_51	R28	UIM2_RST	[16]
		GPIO_52	T28		
		GPIO_53	N28	UIM1_DATA	[16]
		GPIO_54	P28	UIM1_CLK	[16]
		GPIO_55	M28	UIM1_RST	[16]
		GPIO_56	U28		
		GPIO_57	W27		
		GPIO_58	G26	GPIO_LED_KEYPAD	[16]
		GPIO_59	W28	CDC_PDM_CLK	[12]
		GPIO_60	Y28	CDC_PDM_SYNC	[12]
		GPIO_61	Y29	CDC_PDM_TX	[12]
		GPIO_62	AA29	CDC_PDM_RX0	[12]
		GPIO_63	AA28	CDC_PDM_RX1	[12]
		GPIO_64	AB28	CDC_PDM_RX2	[12]
		GPIO_65	G27		
		GPIO_66	AG29	RFFE1_CLK	[18,19,25]
		GPIO_67	AG28	RFFE1_DATA	[18,19,25]
		GPIO_68	AG27		
		GPIO_69	AF27		
		GPIO_70	AF26		[23]
		GPIO_71	AF25	RX_MODE_SEL1 SW_SET4	
		GPIO_72	AD25	DANT_VCTL1	[23]
		GPIO_73	AG6	DANT_VCTL	[23]

U0501-D

[23]	SW_SET5	AF7	GPIO_74		
		AD7	GPIO_75		
[23]	DRX_MODE_SEL2	AD8	GPIO_76		
		AE7	GPIO_77		
PA0_RANGE0 [18]		AE23	GPIO_78		
		AD22	GPIO_79		
[23]	DRX_MODE_SEL0	AF8	GPIO_80		
[23]	DRX_MODE_SEL1	AF8	GPIO_81		
	ANT_VCTL [16]	AG25	GPIO_82		
	ANT_VCTL1 [16]	AF23	GPIO_83		
[26]	EXT_GPS_LNA_EN	AG24	GPIO_84		
[24]	CH0_GSM_TX_PHASE_D0	AF24	GPIO_85		
[24]	RFFE5_CLK	AD23	GPIO_86		
[24]	RFFE5_DATA	AD24	GPIO_87		
		AF25	GPIO_88		
		AF26	GPIO_89		
	VOLUME+ [16]	AF3	GPIO_90		
		AD4	GPIO_91		
CAM_AVDD_2V8_EN [15]		AC4	GPIO_92		
		AC3	GPIO_93		
		GPIO_94	J27	BOARD_1	[5]
		GPIO_95	J29	BOARD_2	[5]
		GPIO_96	J26		
		GPIO_97	J25	EXT_AUDIO_PA_EN	[12]
		GPIO_98	AD28		
		GPIO_99	H29	LCD_INSERT	[15]
		GPIO_100	F28	R0201_33R R0706 SDC1_CLK	[14]
		GPIO_101	F26	SDC1_DATA_7	[14]
		GPIO_102	D28	SDC1_DATA_6	[14]
		GPIO_103	D27	SDC1_DATA_5	[14]
		GPIO_104	A29	SDC1_DATA_4	[14]
		GPIO_105	B29	SDC1_DATA_3	[14]
		GPIO_106	C29	SDC1_DATA_2	[14]
		GPIO_107	F29	SDC1_DATA_1	[14]
		GPIO_108	E28	SDC1_DATA_0	[14]
		GPIO_109	E27	SDC1_CMD	[14]
		GPIO_110	J28		
		GPIO_111	T25		
		GPIO_112	R25		

SDC1

[3,6,11,12,14,18,19,25,27] VREG_L5_1P8

R0713 R0201_NC

R0715 R0201_NC

[5] BOARD_1

[5] BOARD_2

R0722 R0201_100K

R0712 R0201_100K

I2C PULL-UP RESISTORS

SENSORS

[5,6,7,11,13,15] VREG_L6_1P8

R0700 R0201_2.2K

R0702 R0201_2.2K

[5,13,16] SENSOR_I2C_SDA

[5,13,16] SENSOR_I2C_SCL

CAMERAS

[5,6,7,11,13,15] VREG_L6_1P8

R0704 R0201_2.2K

R0705 R0201_2.2K

[5,15] CAM_I2C_SDA

[5,15] CAM_I2C_SCL

TOUCHSCREEN

[5,6,7,11,13,15] VREG_L6_1P8

R0701 R0201_2.2K

R0703 R0201_2.2K

[5,13] TP_I2C_SDA

[5,13] TP_I2C_SCL

GPIOs	BOOT_CONFIG
GPIO_76	BOOT_CONFIG[0],WDOG
GPIO_77	BOOT_CONFIG[1]
GPIO_78	BOOT_CONFIG[2]
GPIO_79	BOOT_CONFIG[3]

BOOT_CONFIG[3:1]	BOOT_CONFIG
0b000	Nand -> SD @ SD2 -> USB2.0
0b001	SD @ SD2 -> USB2.0
0b010	EMMC
0b011	USB2.0

Default Boot Config (0b010) is eMMC

COMPANY: <Company Name>				
TITLE: <Title>				
DRAWN: Zhuyuan Zhao <Drawn By>	DATED: <Drawn Date>			
CHECKED: <Checked By>	DATED: <Checked Date>	CODE: <Code>	SIZE: D	DRAWING NO: <Drawing Number>
QUALITY CONTROL: <QC By>	DATED: <QC Date>			REV: <Revision>
RELEASED: <Released By>	DATED: <Release Date>	SCALE: <Scale>	SHEET: 5 OF 27	

MSM8909_POWER_1

U0501-G

(VDD_MX)

[7,11] VREG_L3_1P15

C0800 GRM155R60J475ME87D/CL05A475MQSNRNC//JMK105BJ475MV-F
C0402_4.7UF_M
C0803
C0201_1UF

Cap depend on PDN simulation
C0801 C0804 C0807
C0201_100NF_6.3V_K

VDD_MEM_1 Y19
VDD_MEM_2 H9
VDD_MEM_3 H11
VDD_MEM_4 H12
VDD_MEM_5 H14
VDD_MEM_6 H17
VDD_MEM_7 H19
VDD_MEM_8 J15
VDD_MEM_9 K21
VDD_MEM_10 K22
VDD_MEM_11 L15
VDD_MEM_12 T10
VDD_MEM_13 T16
VDD_MEM_14 V10
VDD_MEM_15 V20
VDD_MEM_16 Y14

VDD_QFPROM_PRG P8 VREG_16_1P8 [5,7,11,13,15]

SDC_VREF_PADS H6
UIM_VREF_PADS K25 VDD_PX_BIAS_MPP [9]
C0814 C0822 C0201_100NF_6.3V_K
feedback to the pmi8909 v1

VDD_APC_1 J16
VDD_APC_2 J17
VDD_APC_3 J20
VDD_APC_4 J21
VDD_APC_5 K16
VDD_APC_6 K17
VDD_APC_7 K20 VREG_S1_1P15 [6,7,11]
C0603_22UF_M C0826
C0603_22UF_M C0827
VDD_APC_8 L18
VDD_APC_9 L19
VDD_APC_10 M16
VDD_APC_11 M17
VDD_APC_12 M20
VDD_APC_13 M21
VDD_APC_14 N17
VDD_APC_15 N20
VDD_APC_16 N21
C0818 C0824 C0819 C0825
C0201_100NF_6.3V_K
Cap depend on PDN simulation

U0501-H

[6,7,11] VREG_S1_1P15
(VDD_CX)
Cap depend on PDN simulation
C0802 C0805 C0809
C0201_1UF C0201_100NF_6.3V_K
C0806 C0808
C0201_100NF_6.3V_K

VDD_CORE_1 H16
VDD_CORE_2 H22
VDD_CORE_3 K8
VDD_CORE_4 K14
VDD_CORE_5 M10
VDD_CORE_6 M12
VDD_CORE_7 M14
VDD_CORE_8 T12
VDD_CORE_9 T14
VDD_CORE_10 T20
VDD_CORE_11 T22
VDD_CORE_12 Y8
VDD_CORE_13 Y12
VDD_CORE_14 Y16

(VDD_PX1)
(LPDDR2)
VDD_P1_1 E7 VREG_L2_1P2 [7,11,14,15]
VDD_P1_2 E8
VDD_P1_3 E9
VDD_P1_4 E23
VDD_P1_5 E24
VDD_P1_6 F9
VDD_P1_7 F10
VDD_P1_8 F14
VDD_P1_9 F18
VDD_P1_10 F19
VDD_P1_11 F22
C0813 C0820 C0201_1UF C0201_100NF_6.3V_K
C0811 C0823 C0201_100NF_6.3V_K

VDD_P2 E3 (SDC) VREG_L12_SDC [11,14]
C0815 C0201_100NF_6.3V_K

(VDD_PX3)
(BO)
VDD_P3_1 AB8 VREG_L5_1P8 [5,6,11,12,14,18,19,25,27]
VDD_P3_2 AB24
VDD_P3_3 AC8
VDD_P3_4 AC23
VDD_P3_5 H24
VDD_P3_6 K6
VDD_P3_7 K7
C0816 C0201_1UF
C0817 C0201_100NF_6.3V_K

VDD_P4 L25 (UIM3)

VDD_P5 L27 (UIM1) VREG_L14_UIM1 [11,16]
VDD_P6 L26 (UIM2) VREG_L15_UIM2 [11,16]
VDD_P7 G24 (eMMC) VREG_L5_1P8 [5,6,11,12,14,18,19,25,27]
C0810 C0812 C0821
C0201_100NF_6.3V_K

Title
Sheet
Size Name Rev
Date: Sheet of

MSM8909_POWER_2

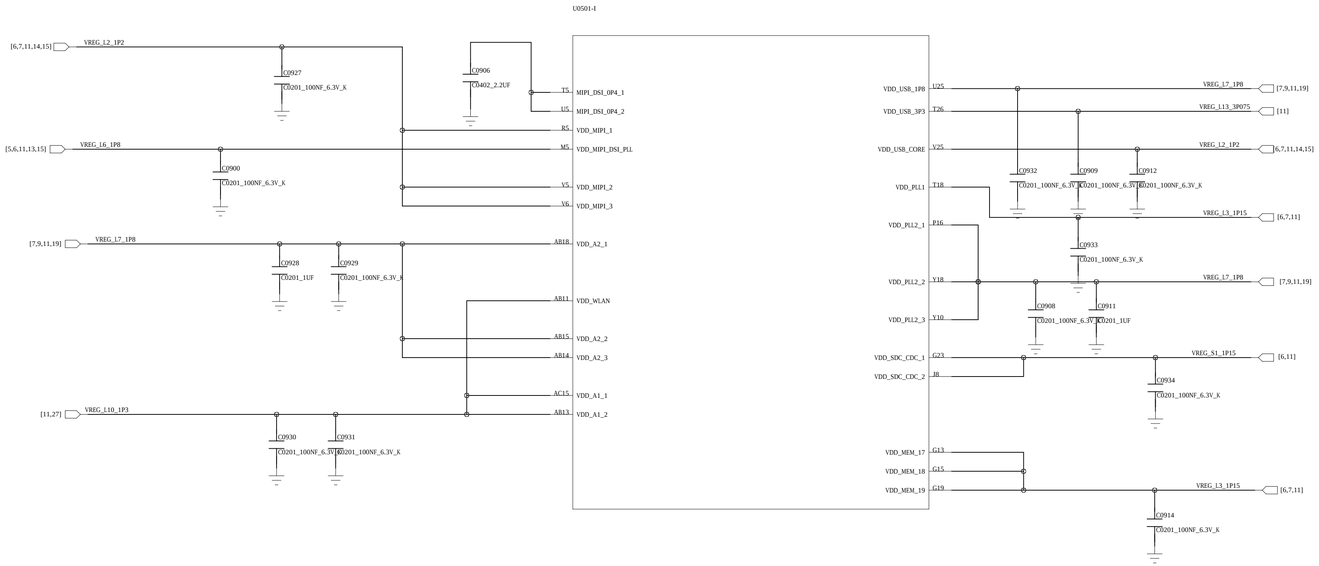

Title

Sheet

Size	Name:	Rev

Date: Sheet of

MSM8909_GND

U0501-K

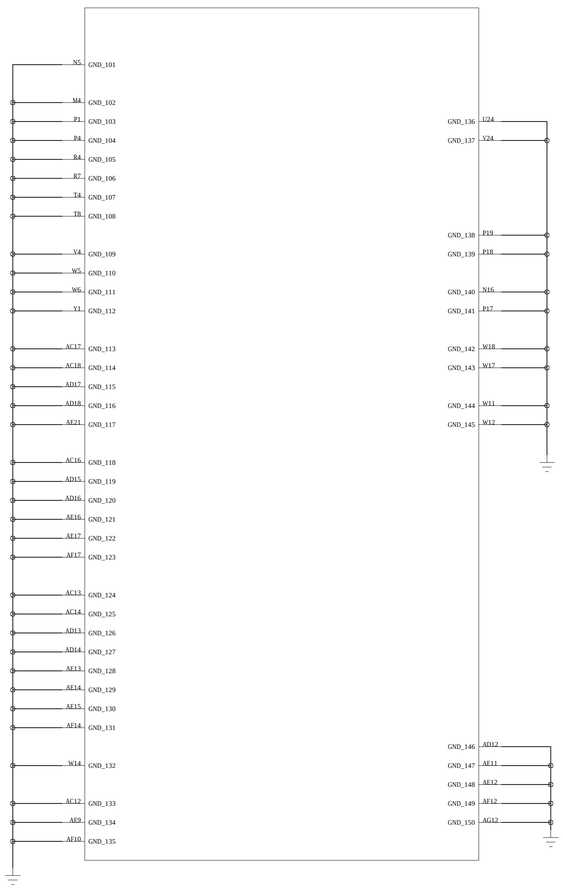

U0501-J

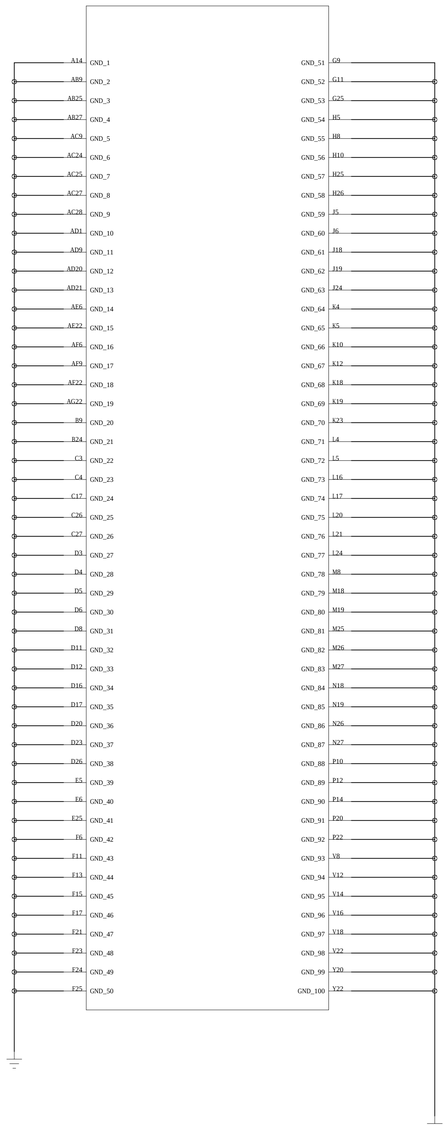

U0501-L

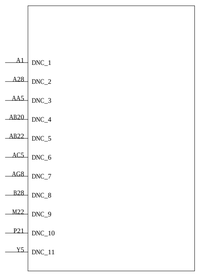

Title

Sheet

Size	Name	Rev

Date: Sheet of

PM8909_CONTROL_1

Note:

XO GND should connect to XOADC_GND pin using thin trace, then via to main ground plane under the XO_THERM cap ground

X1100

1 XTAL
2 GND/THERMISTOR XTAL
THERMISTOR
4
3

XTAL_19M_IN
XTAL_19M_OUT
PM_XO_THERM [9]

[5] single gnd

C1106 C0201_100NF

U1101-B
PM8909

L1	XTAL19M_IN	
K1	XTAL19M_OUT	
[16] KYPD_PWR_N	E5	KYPD_PWR
[3] MSM_RESIN_N	C6	PON_RESET
[3] PS_HOLD	D4	PS_HOLD
[16] PM_RESIN_N	D6	RESIN
	A1	CBL_PWR
[3] SPMI_CLK	D3	SPMI_CLK
[3] SPMI_DATA	B2	SPMI_DATA
[24] WTR_XO_CLK	N3	RF_CLK1
[27] WCN_XO_CLK	N4	RF_CLK2
[3] BBCLK_MSM_EN	M3	BB_CLK1_EN
[3] BB_CLK	K5	BB_CLK1
	K4	BB_CLK2
	F3	XO_THERM
	G3	GND_XOADC
	M1	GND_XO_ISO

[7,11,19] VREG_L7_1P8
R1100 R0201_100K_F
[9] PM_XO_THERM
C1100 C0201_1NF
single gnd

Note:

XOADC_GND pin route a thin trace to XO GND pin, then connect to main ground with a dedicated via at XO_THERM cap GND pin

AVDD_BYP	B1	AVDD_BYP
VREF_BAT_THERM	L11	VREF_BATT_THERM [9]
BAT_THERM	L10	BATT_THERM [9]
BAT_ID	L12	BAT_ID [16]
PA_THERM	E9	PA_THERM [19]
GND23	J4	
VREF_LPDDR	L9	VREF_LPDDR3 [3,14]
VREG_XO	N1	VREG_XO
VREG_RFCLK	N2	VREG_RF_CLK
SLEEP_CLK1	D2	SLEEP_CLK [3]
GND_XO	L3	
GND_RFCLK	L2	
REF_BYP	N9	
GND_REF	N8	

C1102 C0201_1UF
C1105 C0201_100NF_6.3V_X
C1103 C0201_1UF
C1104 C0201_1UF
single gnd
single gnd
C1101 C0201_100NF_6.3V_X
single gnd

Note
GND_XO and GND_RF MUST connect directly to C0506 and C0505 respectively and then connect to main GND with dedicated via.

GND_REF MUST connect directly to C0508 and then to main GND with a dedicated via.

[9] VREF_BATT_THERM
R0201_1.8K_F R1112
[9] BATT_THERM
R0201_1K R1113
BATT_THERM_L [16]

NTCµç×è10K

U1101-C
PM8909

K7	GPIO_1	MPP_1 E4 VDD_P3_BIAS_MPP [6]
E7	GPIO_2	MPP_2 M6 PWM_OUT [15]
E6	GPIO_3	MPP_3 K3 VREF_DAC_MPP [4]
K6	GPIO_4	MPP_4 J3 FORT_CAM_ID [15]

Note:

~~Swap GPIO1 and GPIO3 to avoid BUA issue.~~

Note:

Change the MPP2 and MPP4 assignment to mitigate PWM coupling risk to XTAL_OUT pin

Title

Size | Name | Rev

Date: | Sheet of

PM8909_CONTROL_2

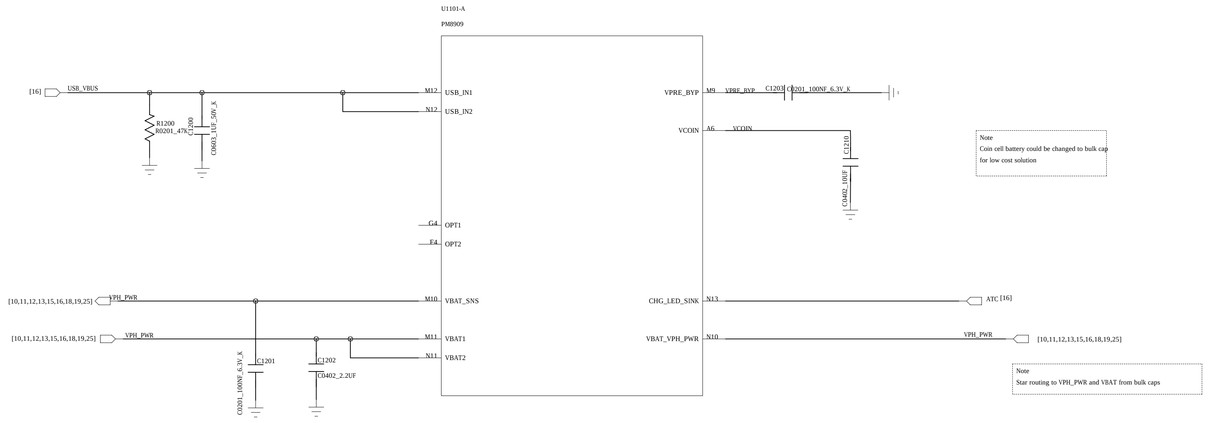

Title

Sheet

Size	Name	Rev

Date: Sheet of

PM8909_POWER

REVISION RECORD			
LTR	ECO NO:	APPROVED:	DATE:

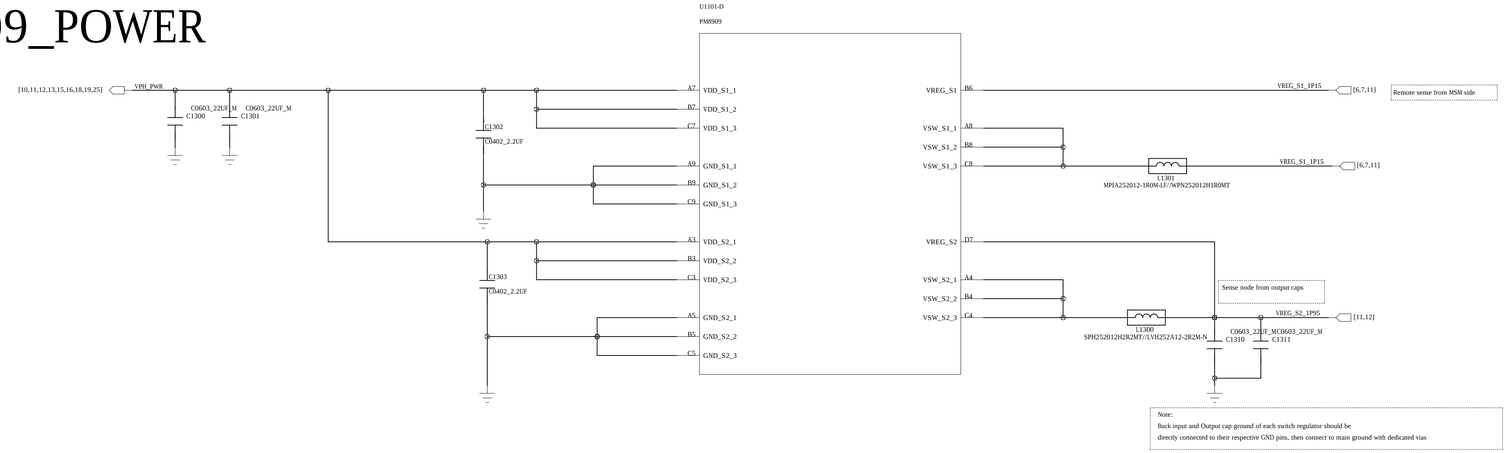

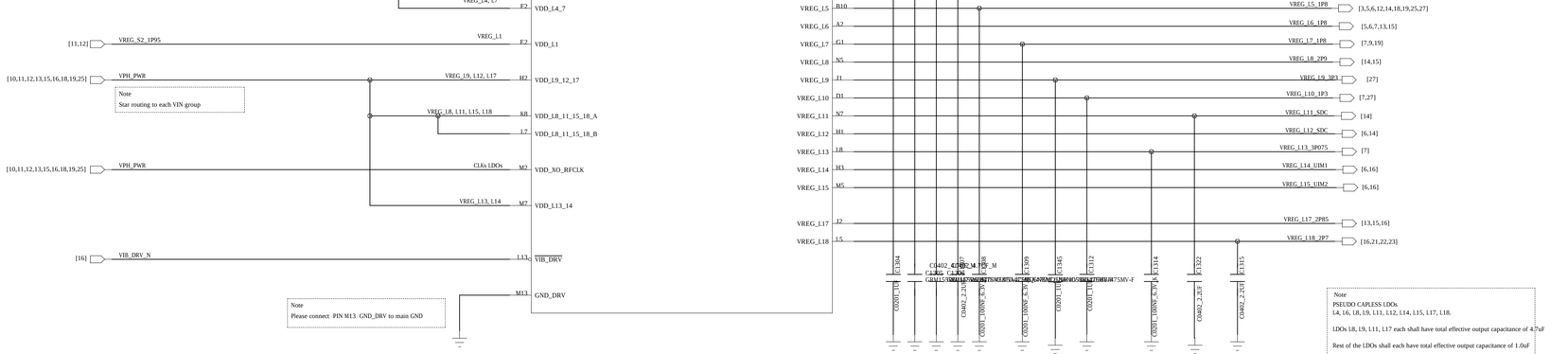

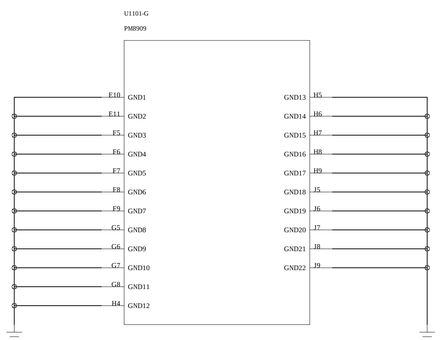

DRAWN: Zhuyuan Zhao <Drawn By>	DATED: <Drawn Date>	COMPANY: <Company Name>	
CHECKED: <Checked By>	DATED: <Checked Date>	TITLE: <Title>	
QUALITY CONTROL: <QC By>	DATED: <QC Date>	CODE: <Code>	SIZE: D
RELEASED: <Released By>	DATED: <Release Date>	DRAWING NO: <Drawing Number>	REV: <Revision>
		SCALE: <Scale>	SHEET: 1 of 27

AUDIO

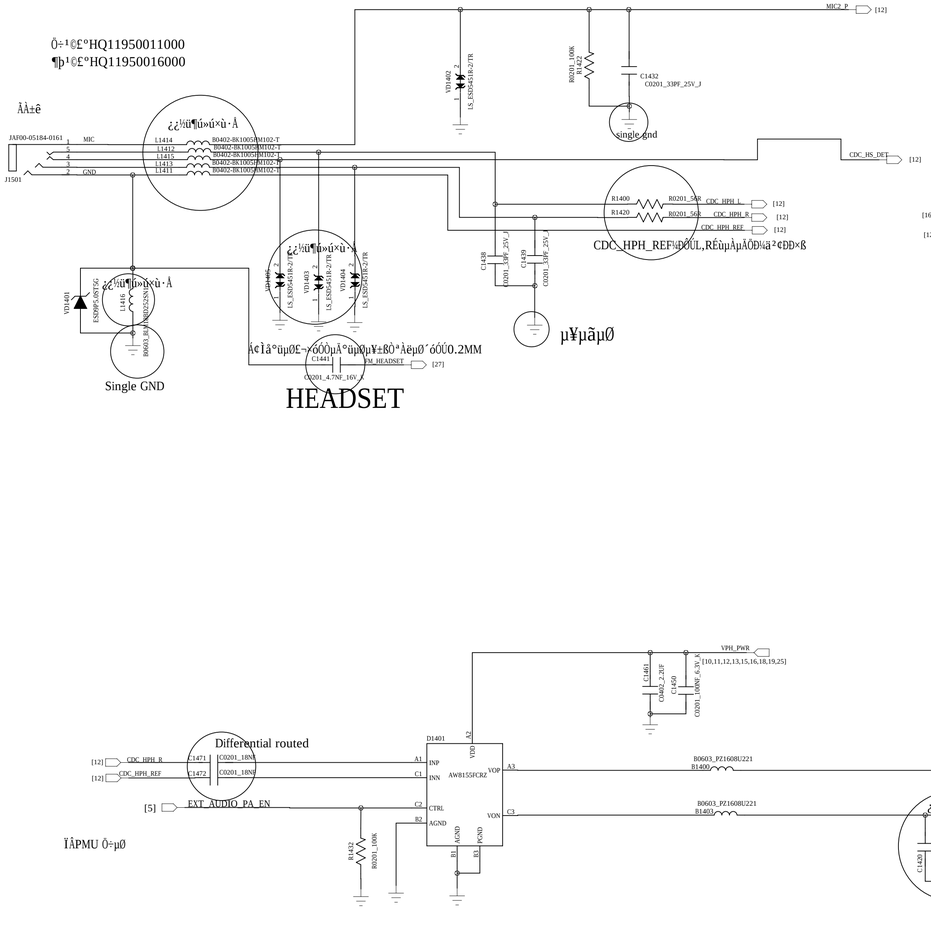

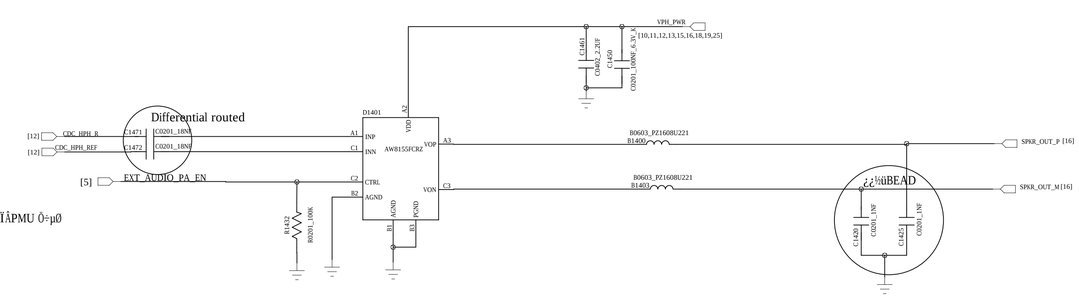

SPK PA

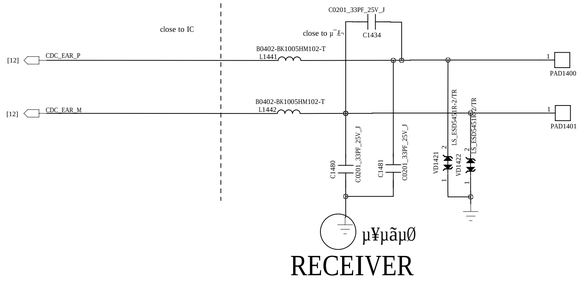

RECEIVER

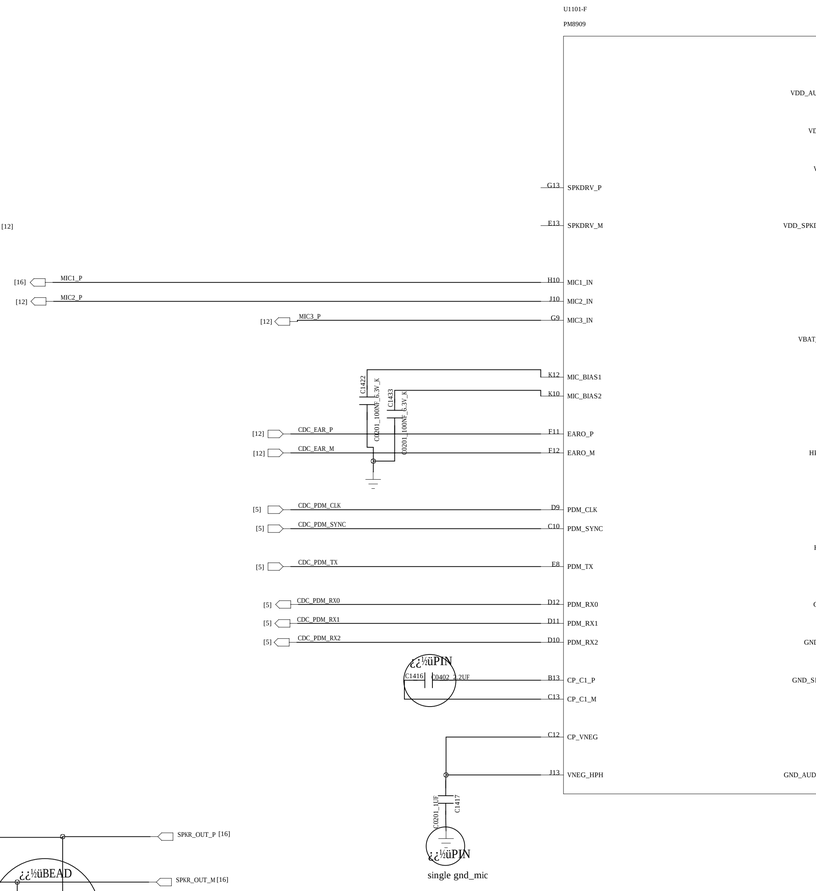

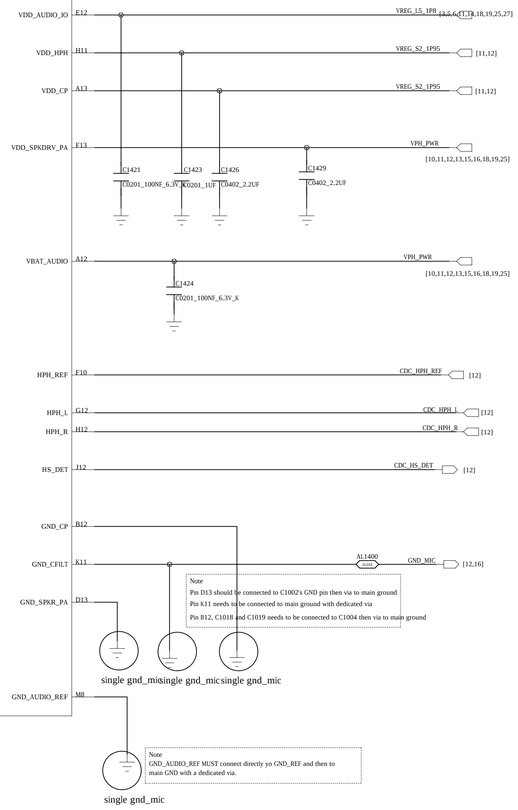

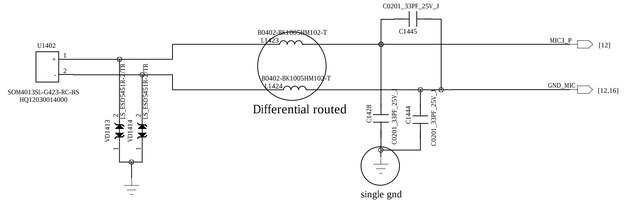

SECONED MIC

REVISION RECORD			
LTR	ECO NO:	APPROVED:	DATE:

BMA223//KXTJ2-1009

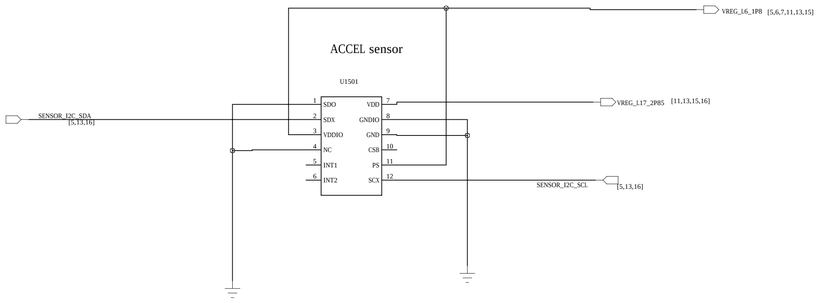

G-sensor

Capass

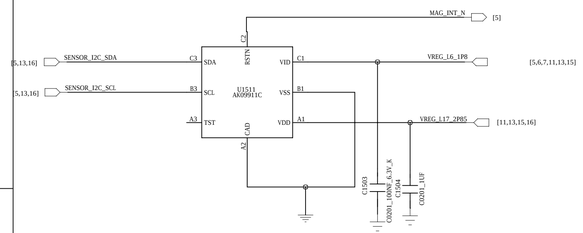

ALS+PS

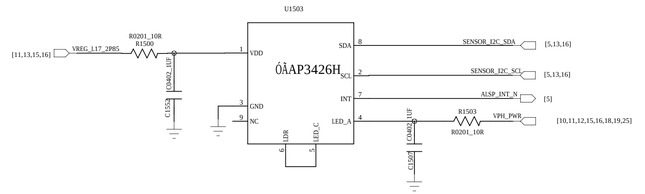

Capacitor Touch Panel

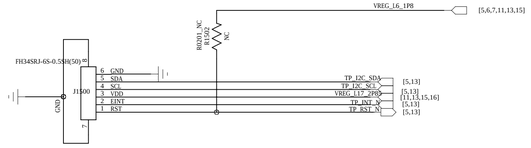

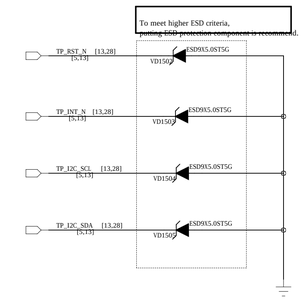

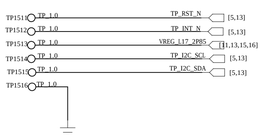

COMPANY: <Company Name>			
TITLE: <Title>			
DRAWN: Zhuyuan Zhao <Drawn By>	DATED: <Drawn Date>		
CHECKED: <Checked By>	DATED: <Checked Date>	CODE: <Code>	SIZE: D
QUALITY CONTROL: <QC By>	DATED: <QC Date>	DRAWING NO: <Drawing Number>	REV: <Revision>
RELEASED: <Released By>	DATED: <Release Date>	SCALE: <Scale>	SHEET: 13 27

REVISION RECORD			
LTR	ECO NO:	APPROVED:	DATE:
A			

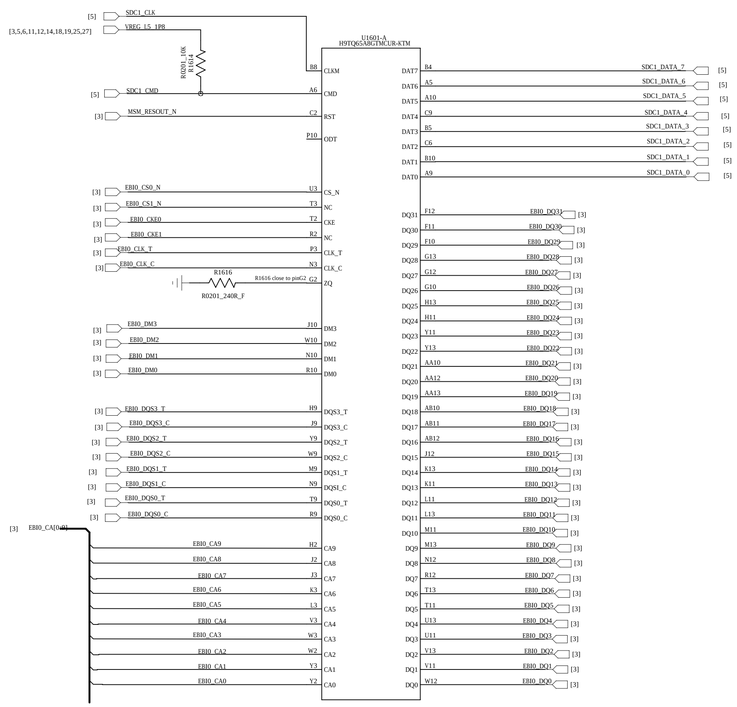

Ô÷¹©£°HQ11960082000

¶þ¹©£°HQ11960081000

È ý¹©£°HQ11960083000

DRAWN: Zhuyuan Zhao <Drawn By>	DATED: <Drawn Date>	COMPANY: <Company Name>	
CHECKED: <Checked By>	DATED: <Checked Date>	TITLE: <Title>	
QUALITY CONTROL: <QC By>	DATED: <QC Date>	CODE: <Code>	SIZE: D
RELEASED: <Released By>	DATED: <Release Date>	DRAWING NO: <Drawing Number>	REV: <Revision>
		SCALE: <Scale>	SHEET: 27

REVISION RECORD			
LTR	ECO NO:	APPROVED:	DATE:

MAIN CAM

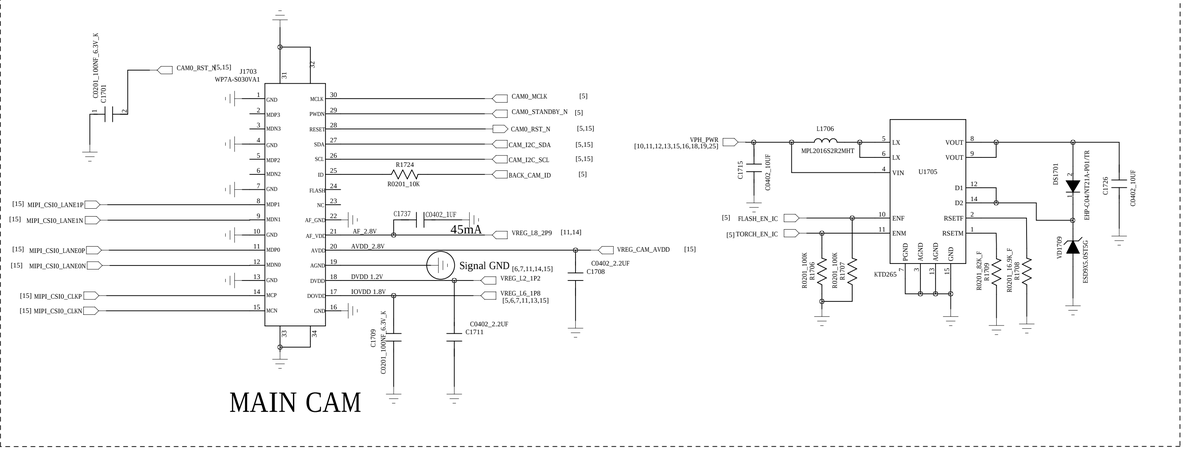

LCD-Connector

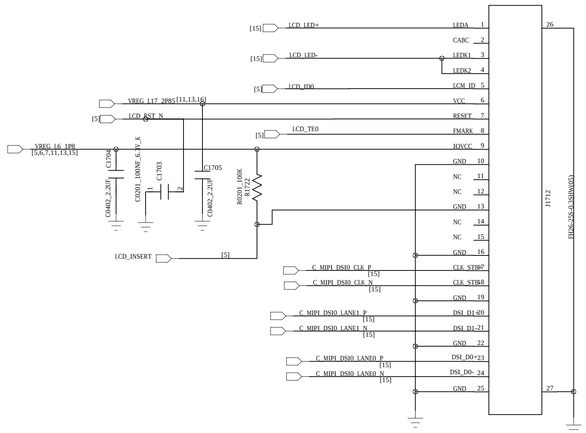

LCD-MIPI DSI EMI

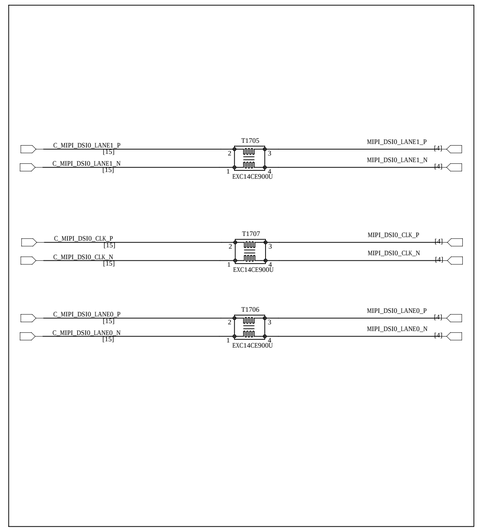

LCD BACKLIGHT_DRIVER

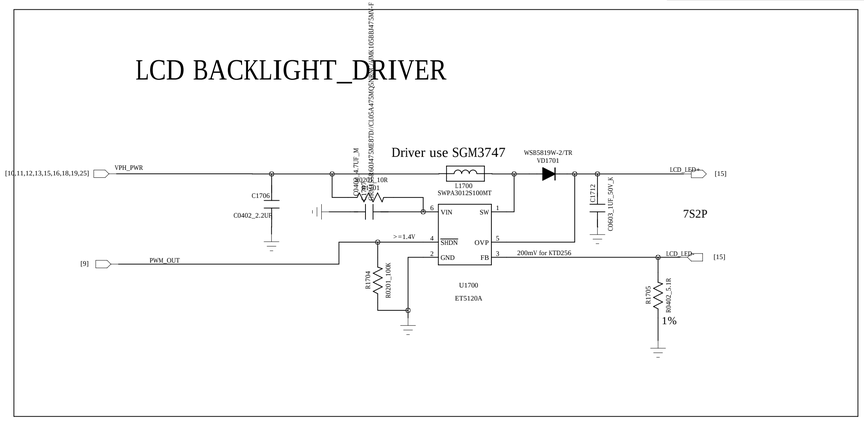

Power For Camera AVDD

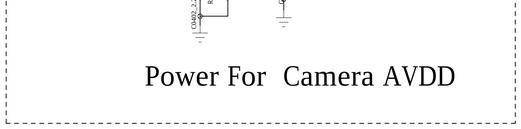

MIPI switch

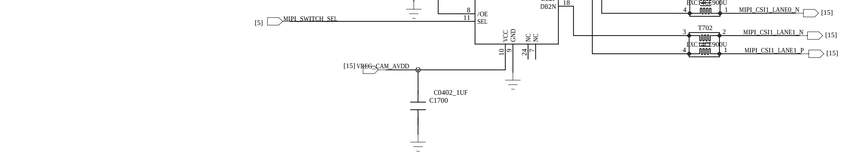

SEL	/OE	Function
Don't Care	HIGH	Disconnect
LOW	LOW	D1, D2, CLK=DA1, DA2, CLKA
HIGH	LOW	D1, D2, CLK=DB1, DB2, CLKB

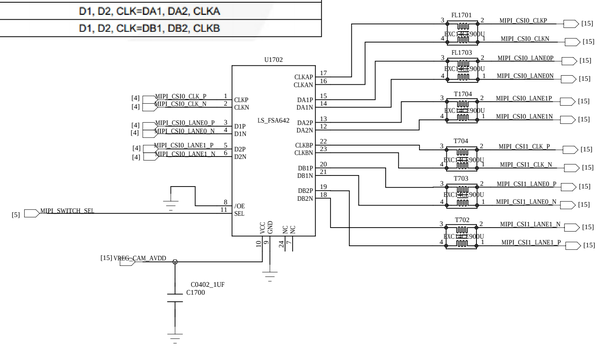

DRAWN: Zhuyuan Zhao <Drawn By>	DATED: <Drawn Date>	COMPANY: <Company Name>	
CHECKED: <Checked By>	DATED: <Checked Date>	TITLE: <Title>	
QUALITY CONTROL: <QC By>	DATED: <QC Date>	CODE: <Code>	SIZE: D
RELEASED: <Released By>	DATED: <Release Date>	DRAWING NO: <Drawing Number>	REV: <Revision>
		SCALE: <Scale>	SHEET: 15 27

INTERFACE

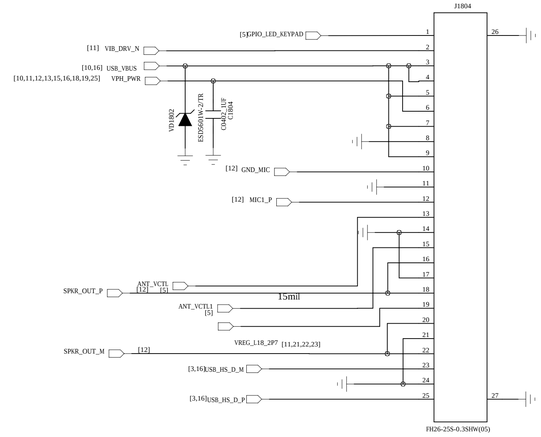

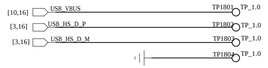

USB

Ö÷¹©£°HQ11960075000
¶Þ¹©£°HQ11960073000

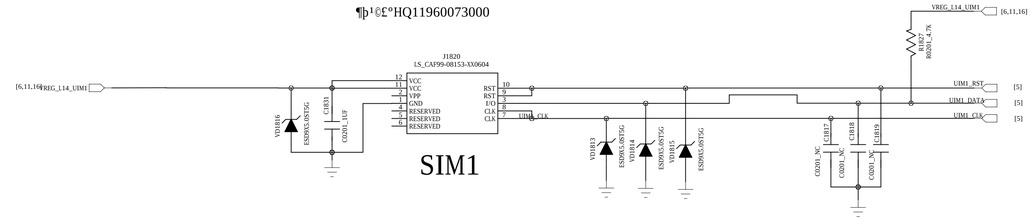

SIM1

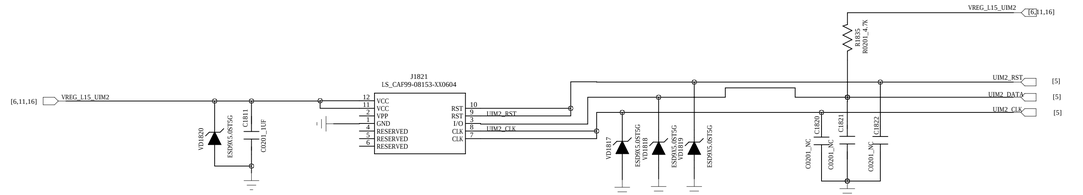

SIM2

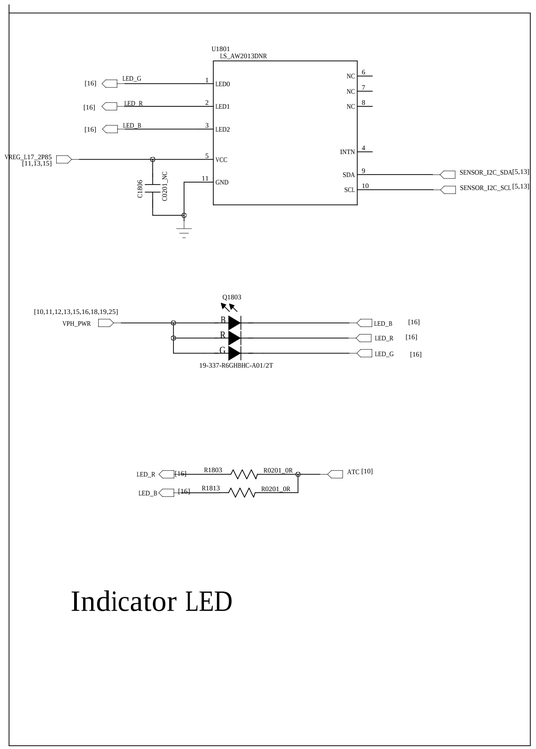

Indicator LED

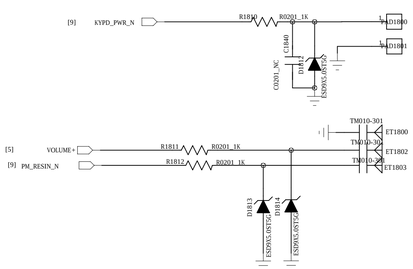

Ô÷¹©£°HQ11940019000
¶Þ¹©£°HQ11940021000

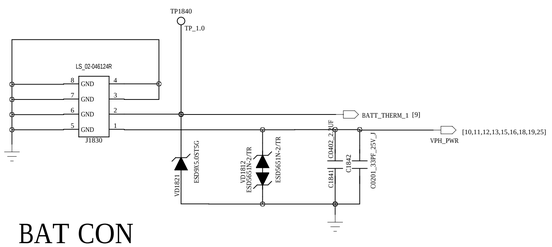

BAT CON

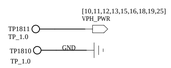

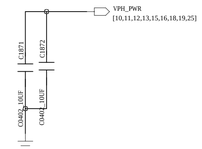

Title		
Sheet		
Size	Name	Rev
Date:	Sheet	of

Title

Sheet

Size	Name	Rev

Date: Sheet of

1

PRIMARY_ANTENNA_SWITCH

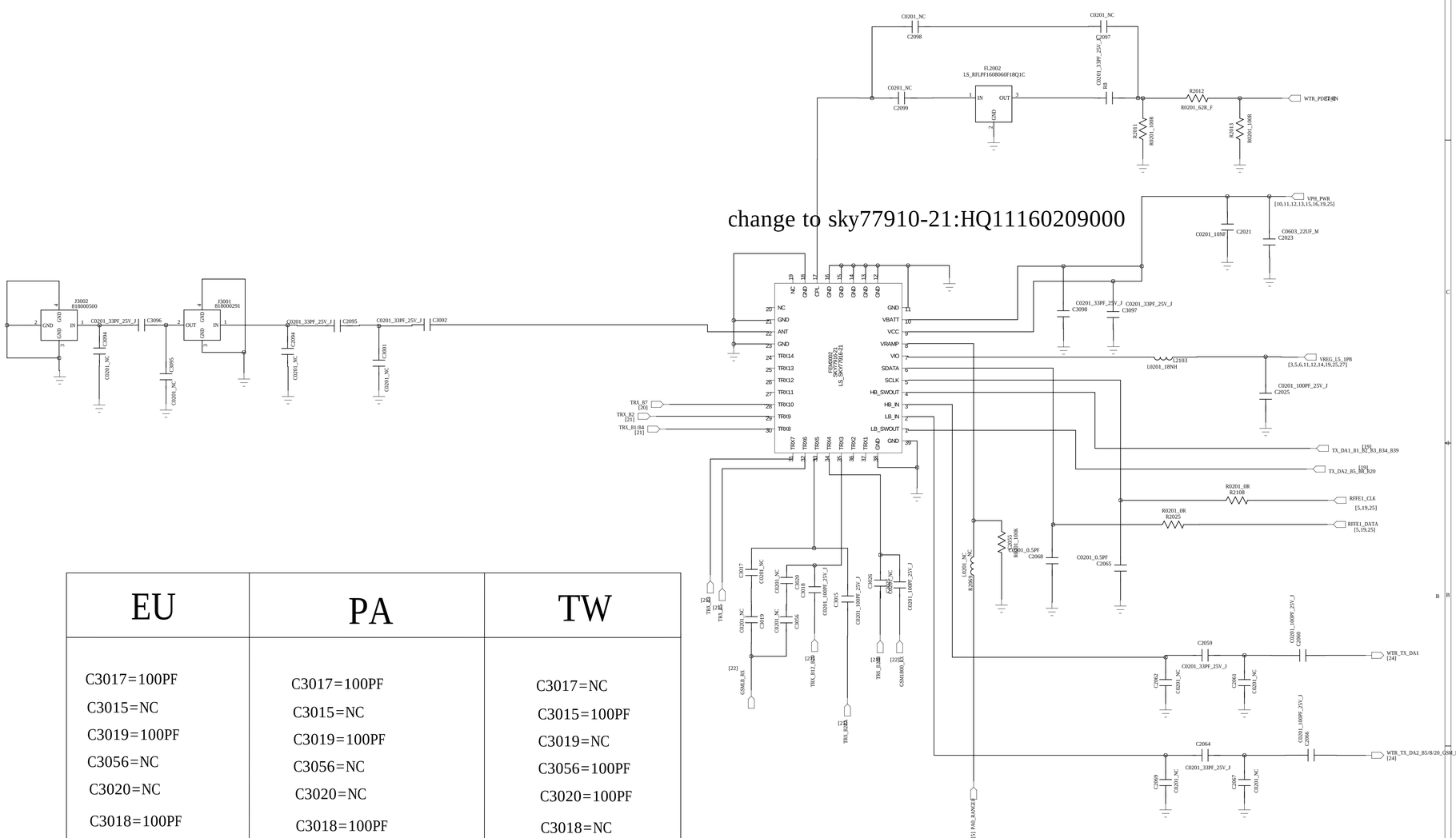

EU	PA	TW
C3017=100PF C3015=NC C3019=100PF C3056=NC C3020=NC C3018=100PF C3026=NC C3025=NC	C3017=100PF C3015=NC C3019=100PF C3056=NC C3020=NC C3018=100PF C3026=NC C3025=100PF	C3017=NC C3015=100PF C3019=NC C3056=100PF C3020=100PF C3018=NC C3026=100PF C3025=NC

NOT TO BE USED, COPIED, REPRODUCED IN WHOLE OR IN PART, NOR ITS CONTENTS REVEALED IN ANY MANNER TO OTHERS WITHOUT THE EXPRESS WRITTEN PERMISSION OF QUALCOMM.

Title

Sheet

Size | Name | Rev

Date: | Sheet of

21: MMMBPA RF7459A

REVISION RECORD			
LTR	ECO NO:	APPROVED:	DATE:

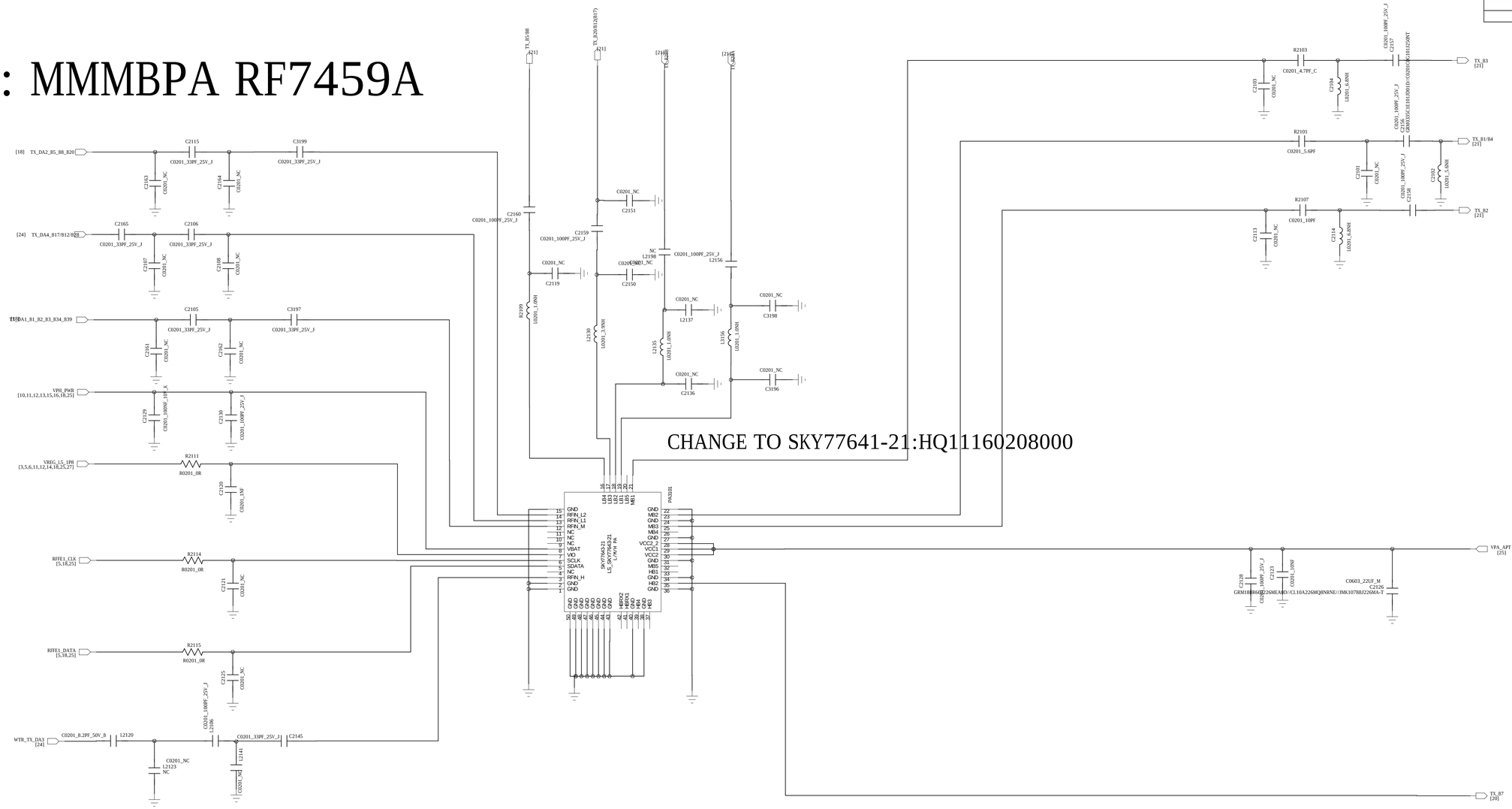

CHANGE TO SKY77641-21:HQ11160208000

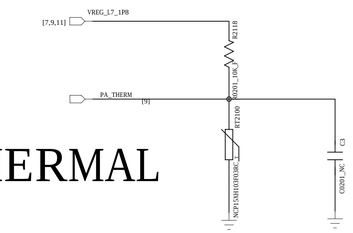

PA_THERMAL

DRAWN: Meng Zhang <Drawn By>	DATED: <Drawn Date>	COMPANY: <Company Name>	
CHECKED: <Checked By>	DATED: <Checked Date>	TITLE: <Title>	
QUALITY CONTROL:	DATED:	CODE:	SIZE: D / DRAWING NO: / REV:
RELEASED:	DATED: <Release Date>	SCALE: <Scale>	SHEET: 19 OF 27

LTE_B7_B28_B17

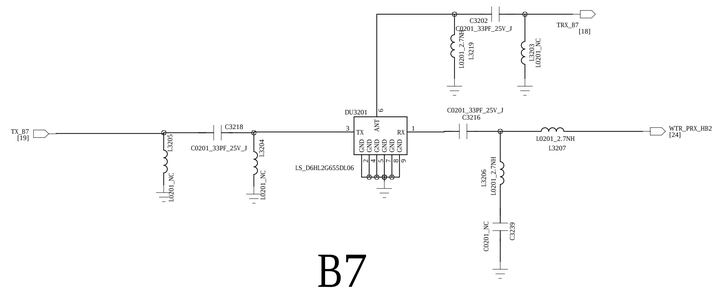

B7

NOT TO BE USED, COPIED, REPRODUCED IN WHOLE OR IN PART, NOR ITS CONTENTS REVEALED IN ANY MANNER TO OTHERS WITHOUT THE EXPRESS WRITTEN PERMISSION OF QUALCOMM.

Title

Sheet

Size	Name	Rev

Date: Sheet of

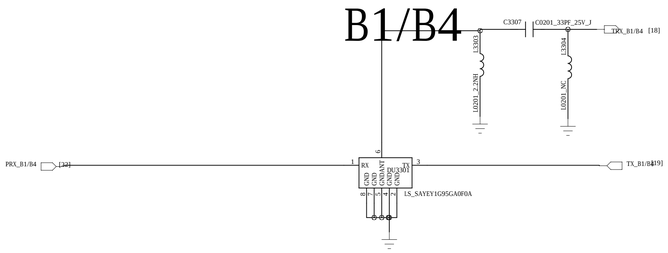

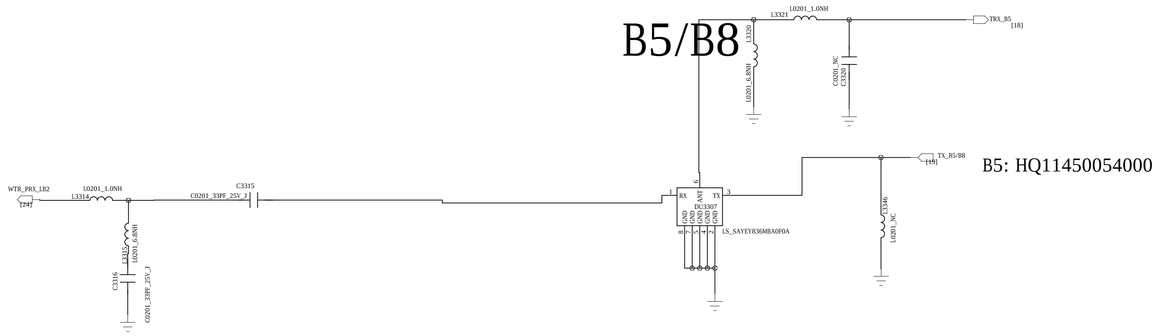

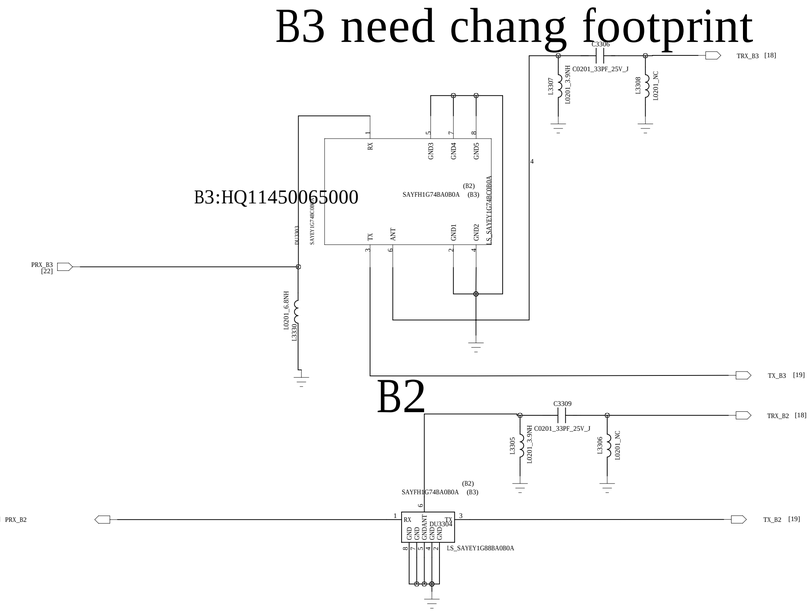

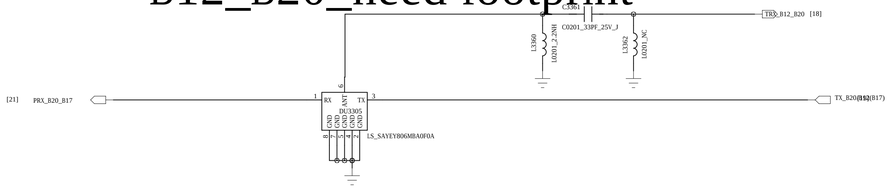

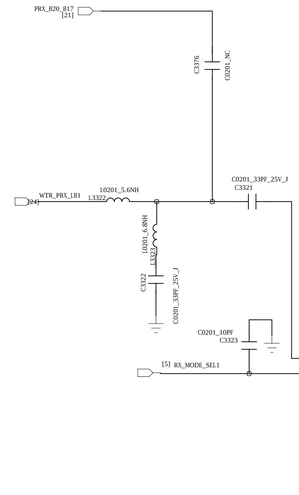

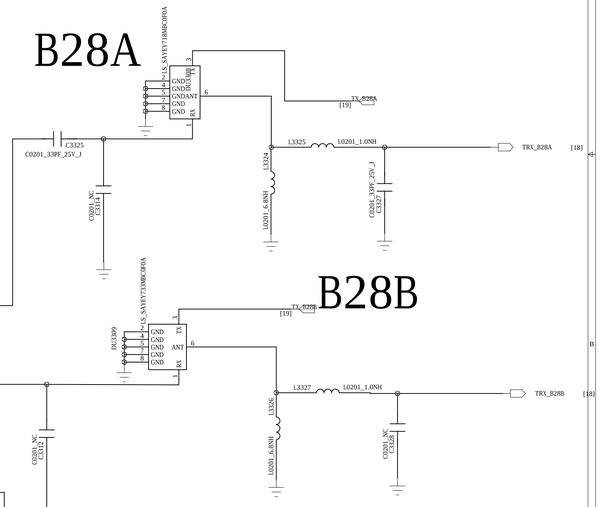

PA B12	EU B20	TW B28
DU3301=HQ11450098000 B4	DU3301=HQ11450074000 B1	DU3301=HQ11450074000 B1
DU3303=NC	DU3303=HQ11450075000 B3	DU3303=HQ11450075000 B3
DU3307=HQ11450099000 B5	DU3307=HQ11450095000 B8	DU3307=HQ11450095000 B8
SW3302=NC	SW3302=NC	SW3302=HQ11170043000
DU3308=NC	DU3308=NC	DU3308=HQ11450080000
DU3309=NC	DU3309=NC	DU3309=HQ11450079000
DU3305=HQ11450096000 B12 C3376=100PF C3321=NC	DU3305=HQ11450097000 B20 C3376=100PF C3321=NC	DU3305=NC C3376=NC C3321=100PF

NOTE:

Euro:B1/3/7/20,1/2/8

PA:B2/4/7/12,2/4/5

TW:B3/8/28,1/2/8

Title

Sheet

Size | Name | Rev

Date: | Sheet of

GSM LB RX

GSM850:HQ11430049000
GSM900:HQ11430045000

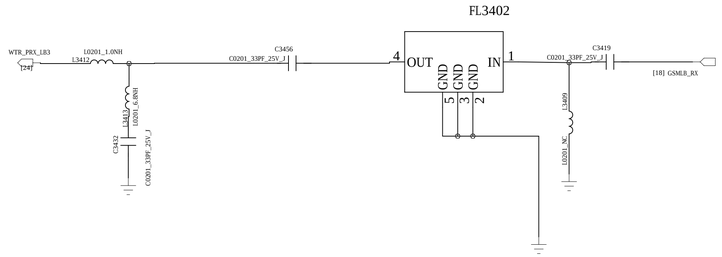

GSM1800 RX

1900RX:HQ11430062000
1800RX:HQ11430061000

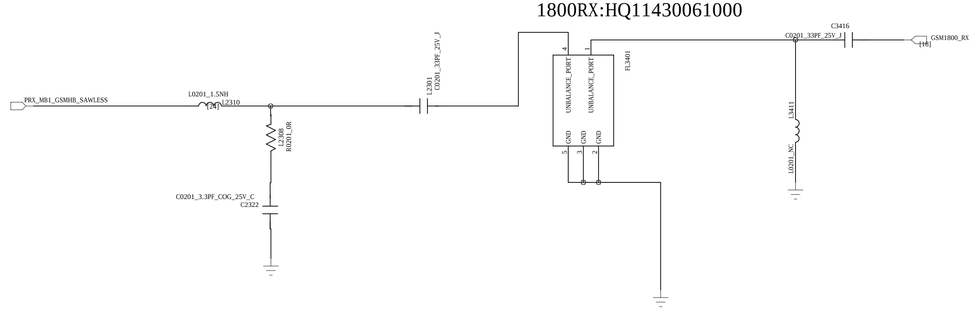

NOTE:

PRX_MB2 FOR GSM1900

PRX_MB1 FOR GSM1800

PRX_B2_B3

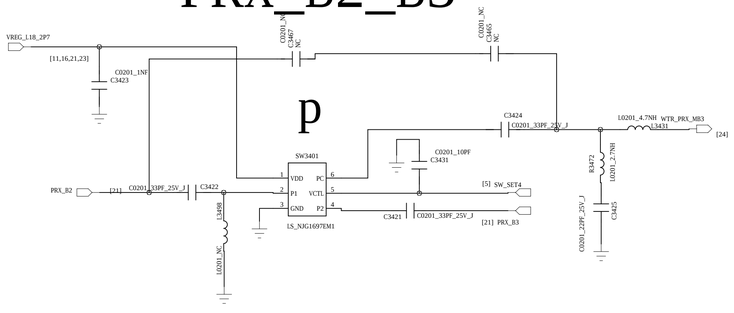

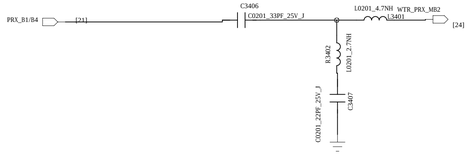

EU	PA	TW
FL3402=HQ11430049000 SW3401=HQ11170043000 C3467=NC C3465=NC C3422=100PF C3424=100PF FL3401=NC	FL3402=HQ11430045000 SW3401=NC C3467=100PF C3465=100PF C3422=NC C3424=NC FL3401=HQ11430061000	FL3402=HQ11430049000 SW3401=HQ11170043000 C3467=NC C3465=NC C3422=100PF C3424=100PF FL3401=NC

Title
Sheet
Size | Name | Rev
Date: | Sheet of

DIV ANT TUNER

NOTE:
Euro:B1/3/7/20,1/2/5/8
PA:B2/4/7/17,1/2/4/5
TW:B3/8/28,1/2/8

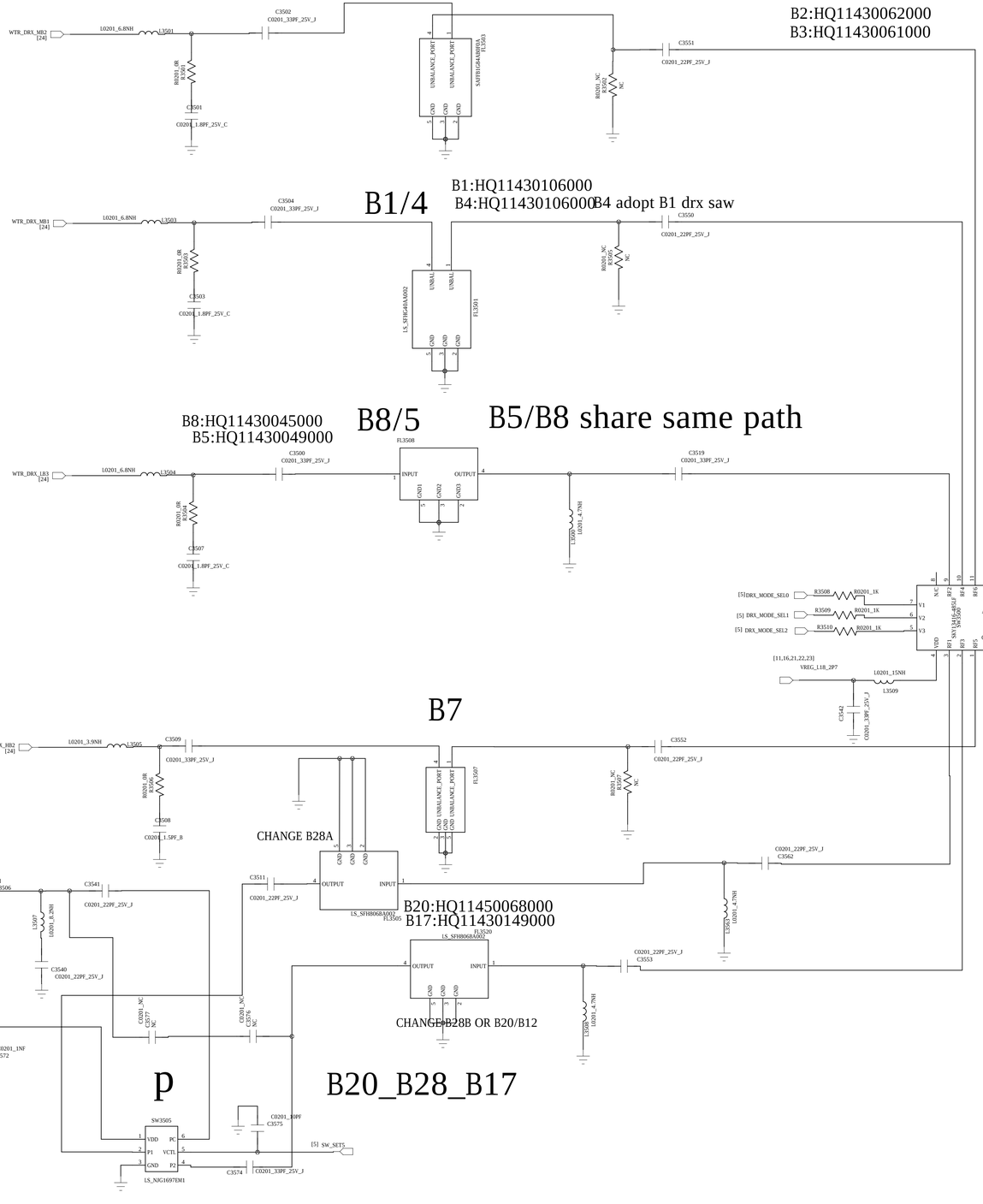

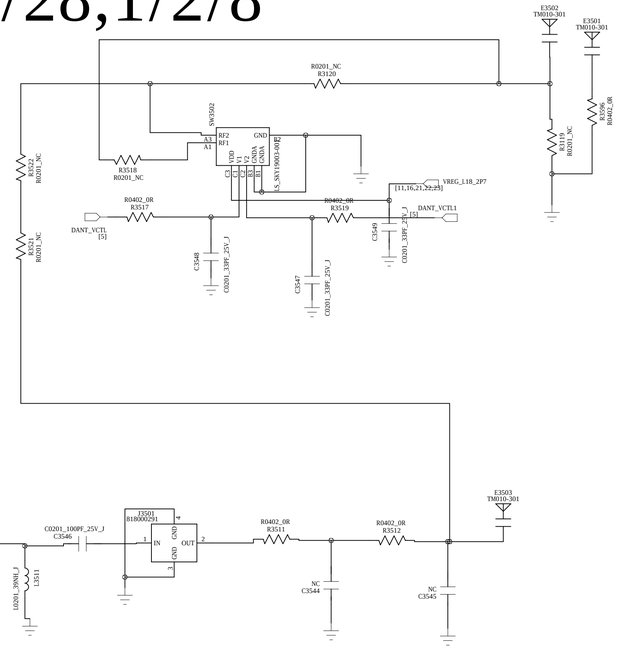

EU	PA	TW
FL3503=HQ11430061000 B3 FL3501=HQ11430106000 B1 FL3508=NC FL3507=HQ11430094000 B7 C3505=NC C3520=HQ11450068000 B20 SW3505=NC C3576=100PF C3574=NC C3577=100PF C3541=NC	FL3503=HQ11430062000 B2 FL3501=HQ11430106000 B4 FL3508=NC FL3507=HQ11430094000 B7 C3505=NC C3520=B12 SW3505=NC C3576=100PF C3574=NC C3577=100PF C3541=NC	FL3503=HQ11430061000 B3 FL3501=NC FL3508=HQ11430045000 B8 FL3507=NC C3505=HQ11430164000 B28A C3520=HQ11430151000 B28B SW3505=HQ11170043000 C3576=NC C3574=100PF C3577=NC C3541=100PF

Title
Sheet
Size | Name | Rev
Date: | Sheet | of

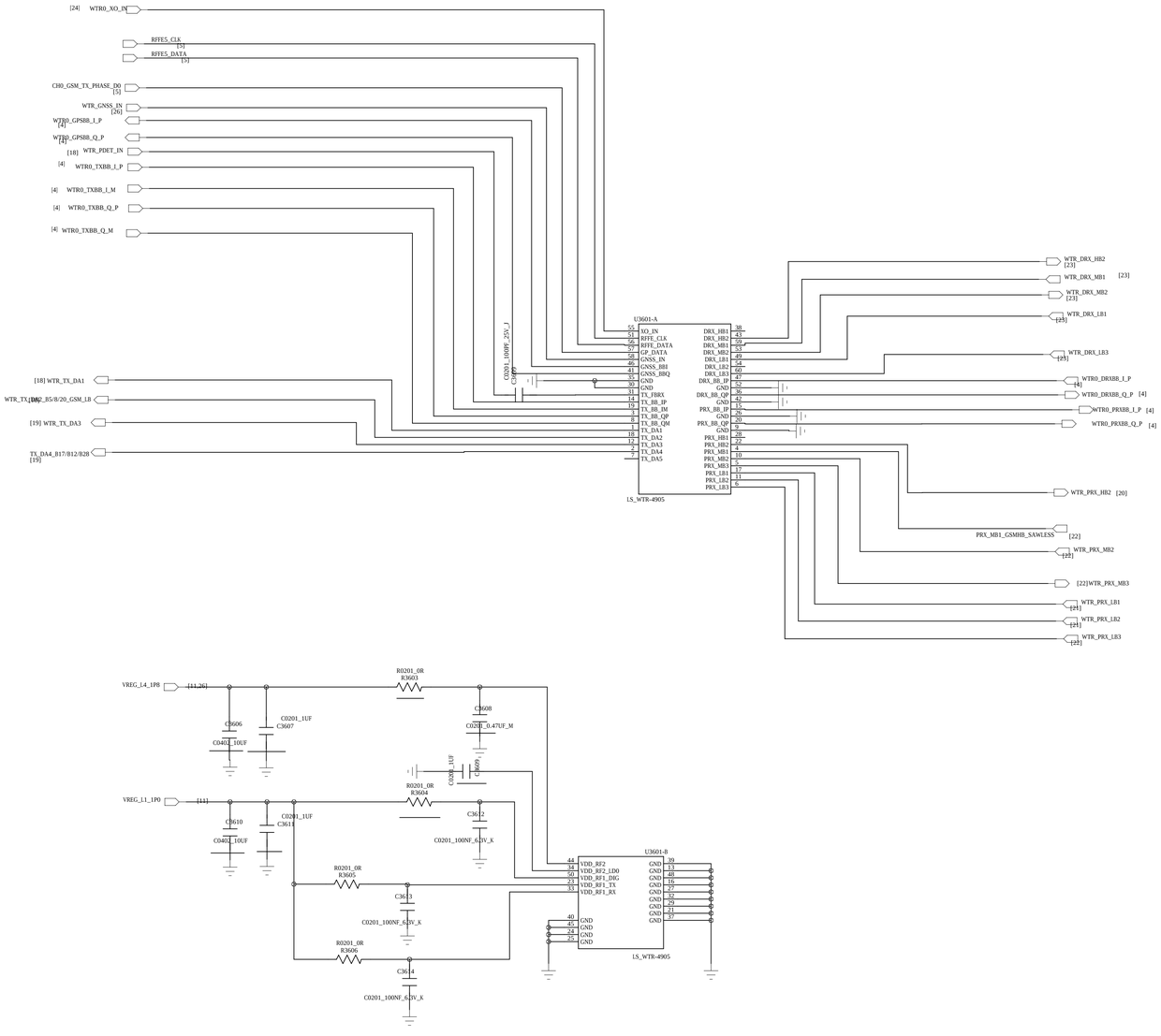

Title

Size	Name	Rev
	Sheet	

Date: Sheet of

QFE2101

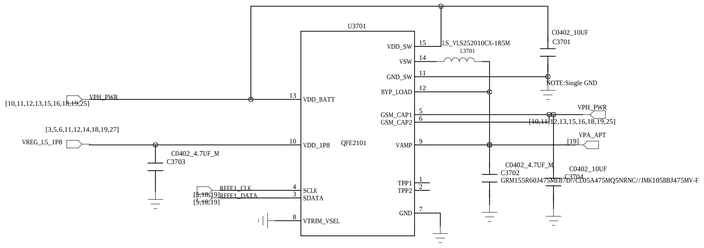

Title

Sheet

Size	Name	Rev

Date: Sheet of

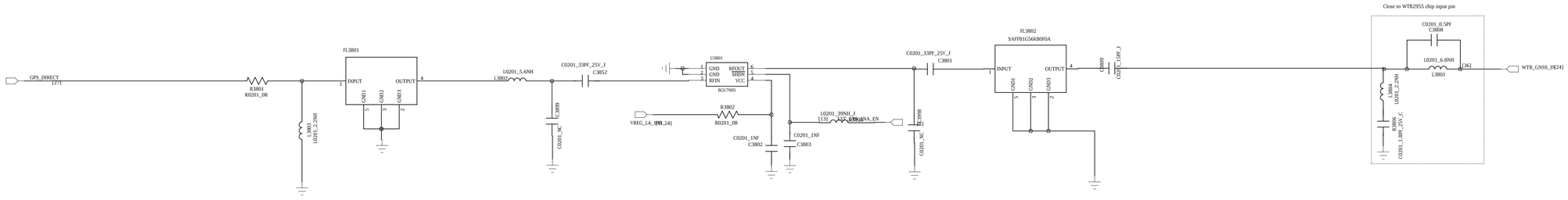

Title

Sheet

Size	Name	Rev
Date:	Sheet of	

E3901
TM010-301

E3902
TM010-301

R3950
NC

J3904

R0402_0R
R3930

R0402_0R
R3931

C0402_NC
C3940
NC

C0402_NC
C3941
NC

C0201_33PF_25V_J
C3921

C0201_NC
C3910

LFD181G58DPFC201

U3901

GPS_DIRECT
[26]

C0201_33PF_25V_J
C3905

L0201_6.8NH
L3901

FL3903

C0201_NC
C3908

L0201_NC
L3906

C0201_NC
C3906

L0201_NC
L3907

FL3901

LS_885033

L0201_NC
L3904

R0201_0R
R3908

WL_BT_RFIO
[27]

C0201_NC
C3911

FM_HEADSET
[12]

R0201_0R
R3932

C3942
C0201_47PF

L0201_82NH_J
L3930

L3931

U3903-A
WCN3610

21	XO_IN	
38	FM_HS_RX	
30	FM_SSBI	WCSS_FM_SSBI [5]
35	FM_DATA	WCSS_FM_SDI [5]
25	BT_CTL	WCSS_BT_CTRL [5]
36	BT_SSBI	WCSS_BT_SSBI [5]
47	BT_DATA	WCSS_BT_DAT_STB [5]
6	GND1	

C3902
C0201_NC

C3904
C0201_82PF_J

R0201_0R
R3901

WCN_XO_CLK
[5]

42	WL_BB_IP	WLAN_BB_I_P [4]
46	WL_BB_IN	WLAN_BB_I_M [4]
45	WL_BB_QN	WLAN_BB_Q_M [4]
41	WL_BB_QP	WLAN_BB_Q_P [4]
32	NC	
18	WL_BT_RFIO	WL_BT_RFIO [27]
10	WL_CMD_SET	WCSS_WLAN_SET [5]
1	WL_CMD_CLK	WCSS_WLAN_CLK [5]
14	WL_CMD_DATA2	WCSS_WLAN_DATA_2 [5]
19	WL_CMD_DATA1	WCSS_WLAN_DATA_1 [5]
20	WL_CMD_DATA0	WCSS_WLAN_DATA_0 [5]

C0201_18PF
C3907

EU	PA	TW
FL3903=NC	FL3903=NC	FL3903=HQ11420001000
FL3901=HQ11420008000	FL3901=HQ11420008000	FL3901=NC
C3908=NC	C3908=NC	C3908=33PF
C3906=NC	C3906=NC	C3906=0R
C3905=33PF	C3905=33PF	C3905=NC
R3908=0R	R3908=0R	R3908=NC

VREG_L10_1P3
[7,11]

BLM03AX2415SN1
L3905

R3905
R0201_0R

VDD_WL_LO_1P3
[27]

pin 12,15

C0402_4.7UF_M
C3913
GRM155R60J475ME87D//CL05A475MQSNRNC//JMK105BBJ475MV-F

C0201_100PF_25V_J
C3914

C0402_10UF
C3923

WL_VDD_TX8B_1P3
[27]

pin 37

C3915

C0201_100PF_25V_J

WL_VDD_TX8B_1P3
[27]

pin2, 3,4

C3916
C0201_10NF

WL_VDD_TX8B_1P3
[27]

pin 5

C3918
C0201_10NF

WL_VDD_TX8B_1P3
[27]

pin 39,40,43,44

C3901
C0201_22NF

share pad

R3920
R0201_0R

VDD_DIG_1P2
[27]

pin 23

C0201_NC
C3947

C0201_10NF
C3919

VREG_L9_3P3
[11]

R3917
R0201_0R

VREG_WLAN_3P3
[27]

pin 17 pin9

C0201_100PF_25V_J
C3912

C0402_10UF
C3929

VREG_WLAN_3P3
[27]

pin 9

C0201_NC
C3946

VREG_L5_1P8
[3,5,6,11,12,14,18,19,25,27]

C0201_0.47UF_M
C3917

VREG_L5_1P8
[3,5,6,11,12,14,18,19,25,27]

pin 28

U3903-8
WCN3610

VREG_L5_1P8
[3,5,6,11,12,14,18,19,25,27]

28	VDD_IO_1P8	
23	VDD_DIG_1P2	VDD_DIG_1P2 [27]
43	VDD_FM_RXFE_1P3	WL_VDD_TX8B_1P3 [27]
44	VDD_FM_RXBB_1P3	
40	VDD_FM_PLL_1P3	
39	VDD_FM_VCO_1P3	
37	VDD_WL_RX_1P3	WL_VDD_TX8B_1P3 [27]
5	VDD_WL_BT_DIG_1P3	WL_VDD_TX8B_1P3 [27]
2	VDD_WL_TX_BB_1P3	WL_VDD_TX8B_1P3 [27]
4	VDD_WL_2GPA_1P3	WL_VDD_TX8B_1P3 [27]
3	VDD_WL_UPC_1P3	
15	VDD_WL_PLL_1P3	VDD_WL_LO_1P3 [27]
12	VDD_WL_LO_1P3	
17	VDD_WL_2GPA_3P3	VREG_WLAN_3P3 [27]
9	VDD_BT_DA_3P3	VREG_WLAN_3P3 [27]

24	GND8	
33	GND13	
34	GND14	
29	GND11	
16	GND6	
31	GND12	
11	GND4	
7	GND2	
22	GND7	
26	GND9	
27	GND10	
13	GND5	
8	GND3	

NOT TO BE USED, COPIED, REPRODUCED IN WHOLE OR IN PART, NOR ITS CONTENTS REVEALED IN ANY MANNER TO OTHERS WITHOUT THE EXPRESS WRITTEN PERMISSION OF QUALCOMM.

QUALCOMM Incorporated
5775 Morehouse Drive
San Diego, CA 92121-1714
U.S.A.

Title

Sheet

Size	Name	Rev

Date: Sheet of