PG180-A02

256b GDDR6 x16
TALL DP + DP + DP + HDMI/DP + USB

TABLE OF CONTENTS

Page	Description
1	Table of Contents
2	Block Diagram
3	PCI Express
4	PCI Termination
5	MEMORY: GPU Partition A/B
6	MEMORY: FBA Partition 31..0
7	MEMORY: FBA Partition 63..32
8	MEMORY: FBB Partition 31..0
9	MEMORY: FBB Partition 63..32
10	MEMORY: GPU Partition C/D
11	MEMORY: FBC Partition 31..0
12	MEMORY: FBC Partition 63..32
13	MEMORY: FBD Partition 31..0
14	MEMORY: FBD Partition 63..32
15	GPU PWR and GND
16	GPU Decoupling
17	GPU DECOUPLING
18	IFPAB TALL-DP
19	IFPE DP
20	IFPF USBC
21	IFPC HDMI 2.0/DP
22	IFPD DP
23	NVHS INTERFACE
24	MISC: FAN,THERMAL,JTAG,GPIO,STEREO
25	MISC3: ROM, STRAPS
26	MISC: XTAL, PLL
27	MISC: USB PPC
28	PS: USB VR
29	PS: 5V, 5V BACKUP
30	PS: PEXVDD, 1V8
31	PS: FBVDD CONTROLLER
32	PS: FBVDD CONTROLLER OVR3
33	PS: FBVDD PHASE 1, 2
34	PS: NVVDD CONTROLLER OVR8
35	PS: NVVDD Phase 1, 2
36	PS: NVVDD Phase 3, 4
37	PS: NVVDD Phase 5, 6
38	PS: NVVDD Phase 7, 8
39	PS: INPUT SWITCH RTD3
40	PS: INPUT SWITCH RTD3 USB
41	PS: INPUT SWITCH RAIL BALANCE
42	PS: 12V CURRENT STEERING
43	PS: VR THERMAL PROTECTION
44	PS: INPUTS, FILTERING AND MONITORING
45	PS: CURRENT STEERING,HOT UNPLUG DETECT
46	PS: PRE-FILTER
47	SEQUENCE: 5V, 1V8, NV3V3 ENABLE
48	SEQUENCE: NV, PEX, FB ENABLE
49	SEQUENCE: PCIE VOLTAGE MONITOR
50	SEQUENCE: DISCHARGE
51	SEQUENCE: MISC
52	LED & FAN HEADERS
53	LED 2
54	Mechanical: Bracket/Thermal Solution

base on V372-02S change for D18 Z
1. P.23 remove SLI & BRIDGE_LED_VDD & SLI_BRG_PRST*
2. P.52 remove LED change FAN connector
3. P.53 remove LED
4. P.3&44 add FUSE
5. P.5~14 mem add < >
6. P.53 LED use V336-0D
7. P.32 remove
8. P.35~38 dual MOS
9. P.33 change dual MOS
10. P.43 remove
11. P.31 change to UP1666
12. P.21 remove colay DP

0727:

page 24: REMOVE GPIO29_IDLE_IN_SW
remove GPIO9_INPUT_DYN_BAL2

page 29: 12V_F RTD3 change to 12V_F

page 30: 12V_F RTD3 change to 12V_F

page 33: 12V_F RTD3 change to 12V_F
移除保護線路

page 39: remove INPUT SWITCH RTD3

page 40: remove INPUT SWITCH RTD3 USB

page 44: remove INA3221

page 46: remove PFM_SKIP net
remove PS_RTD3_12V_SW net

page 47: remove PS_VMON_PGOOD net
12V_F RTD3 change to 12V_F
remove 3V3_PORT
remove 3V3_RTD3 change to nv3v3

page 48: remove OC_CRIT* NET from ina3221
remove PS_VMON_PGOOD net

page 49: PCIE Voltage Monitor1

page 52: REMOVE VIN =>12V_PEX6_8_IN_OVRS

page 54: change GPU scrow holes to small size

MICRO-STAR INT'L CO.,LTD
MS-V373
Size: Custom
Document Description: Page1:Table of Contents
Rev: 7.0
Date: Tuesday, August 21, 2018
Sheet 1 of 54

Page2: Block Diagram

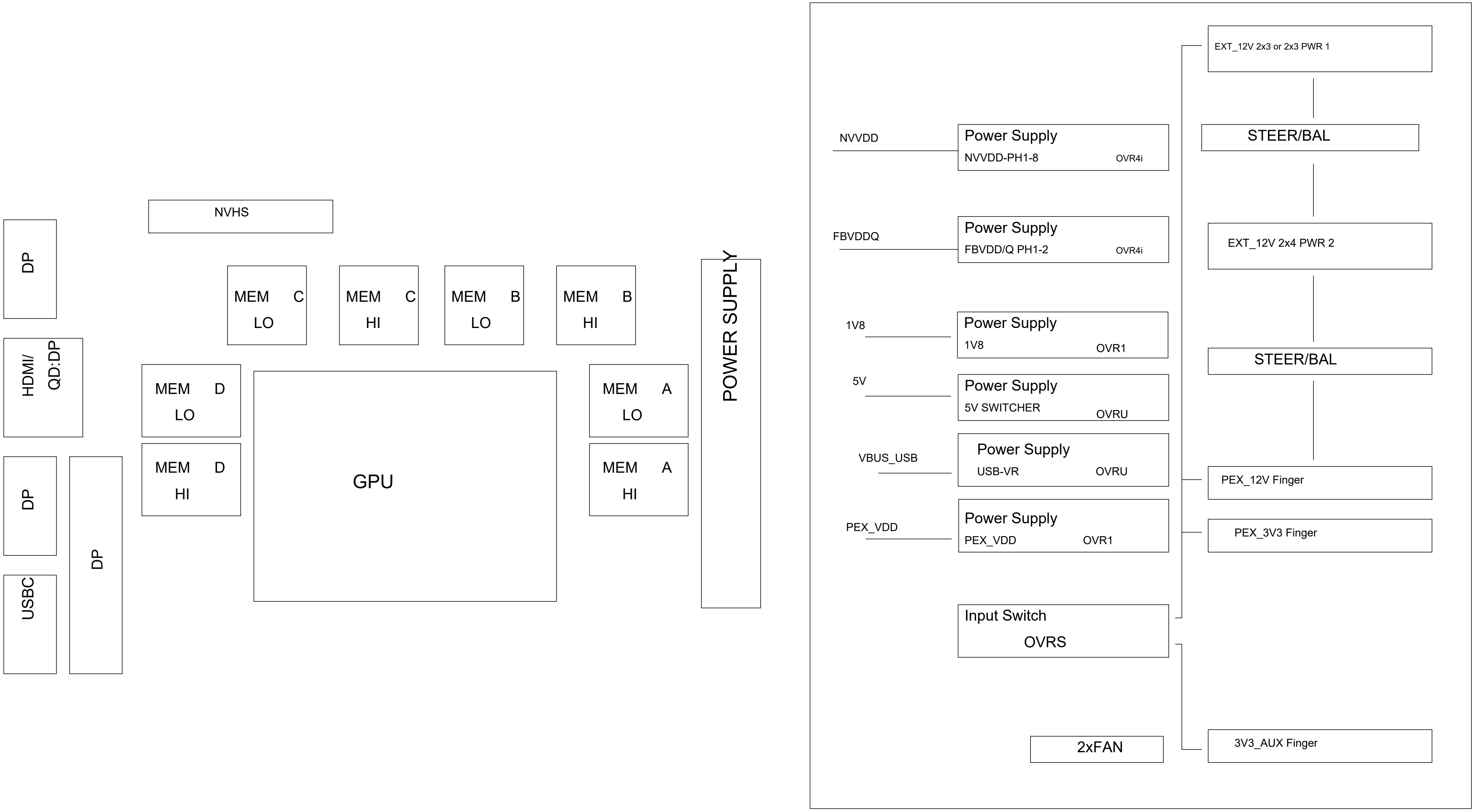
NVHS
DP
HDMI/ QD:DP
DP
USBC
DP
MEM C LO
MEM C HI
MEM B LO
MEM B HI
MEM D LO
MEM D HI
GPU
MEM A LO
MEM A HI
POWER SUPPLY
NVVDD
Power Supply
NVVDD-PH1-8
OVR4i
FBVDDQ
Power Supply
FBVDD/Q PH1-2
OVR4i
1V8
Power Supply
1V8
OVR1
5V
Power Supply
5V SWITCHER
OVRU
VBUS_USB
Power Supply
USB-VR
OVRU
PEX_VDD
Power Supply
PEX_VDD
OVR1
Input Switch
OVRS
2xFAN
EXT_12V 2x3 or 2x3 PWR 1
STEER/BAL
EXT_12V 2x4 PWR 2
STEER/BAL
PEX_12V Finger
PEX_3V3 Finger
3V3_AUX Finger

MICRO-STAR INT'L CO.,LTD

MS-V373

Size	Document Description	Rev
Custom	Page2:Block Diagram	7.0

Date: Tuesday, August 21, 2018 Sheet 2 of 54

Page3: PCI Express

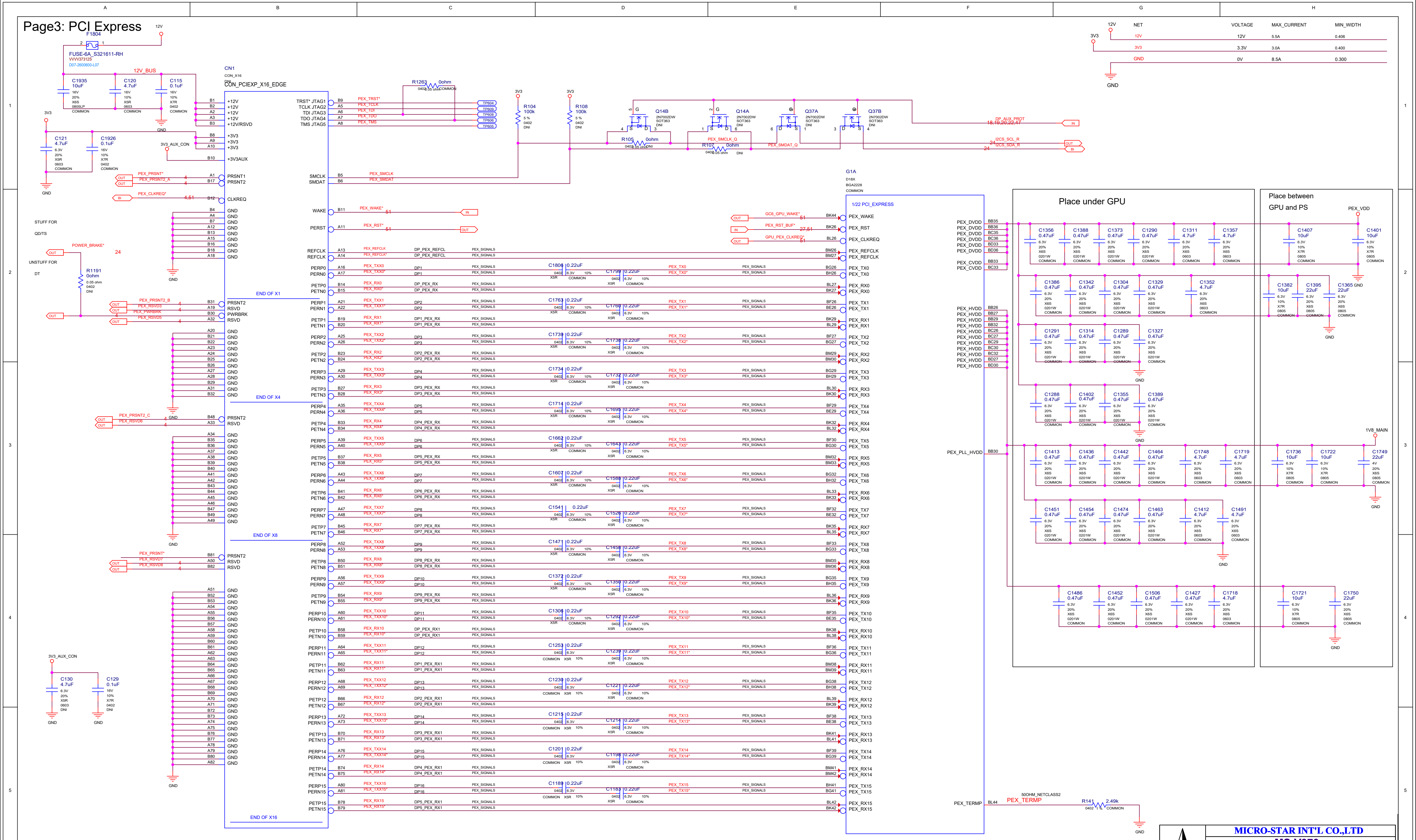
12V
F1804
FUSE-6A_S321611-RH
12V_BUS
C1935 10uF
C120 4.7uF
C115 0.1uF
3V3
C121 4.7uF
C1926 0.1uF
3V3_AUX_CON
CN1
CON_X16
CON_PCIEXP_X16_EDGE
+12V
+12V/RSVD
+3V3
+3V3AUX
PRSNT1
PRSNT2
CLKREQ
GND
RSVD
PWRBRK
END OF X1
END OF X4
END OF X8
END OF X16
TRST* JTAG1
TCLK JTAG2
TDI JTAG3
TDO JTAG4
TMS JTAG5
SMCLK
SMDAT
WAKE
PERST
REFCLK
R1263 0ohm
R104 100k
R108 100k
Q14B
Q14A
Q37A
Q37B
2N7002DW
R105 0ohm
R107 0ohm
DP_AUX_PROT
I2CS_SCL_R
I2CS_SDA_R
PEX_SMDAT_Q
PEX_SMCLK_Q
STUFF FOR
QD/TS
UNSTUFF FOR
DT
POWER_BRAKE*
R1191 0ohm
C130 4.7uF
C129 0.1uF
G1A
BGA2228
1/22 PCI_EXPRESS
PEX_WAKE
PEX_RST
PEX_CLKREQ
PEX_REFCLK
PEX_TX0 … PEX_TX15
PEX_RX0 … PEX_RX15
GC6_GPU_PEX_WAKE*
PEX_RST_BUF*
GPU_PEX_CLKREQ*
PEX_DVDD
PEX_CVDD
PEX_HVDD
PEX_PLL_HVDD
PEX_TERMP
50OHM_NETCLASS2
R141 2.49k
Place under GPU
Place between GPU and PS
PEX_VDD
1V8_MAIN
0.22uF
0.47uF
4.7uF
10uF
22uF

NET	VOLTAGE	MAX_CURRENT	MIN_WIDTH
12V	12V	5.5A	0.406
3V3	3.3V	3.0A	0.400
GND	0V	8.5A	0.300

MICRO-STAR INT'L CO.,LTD

MS-V373

Size: Custom
Document Description: Page3:PCI Express
Rev: 7.0
Date: Tuesday, August 21, 2018
Sheet 3 of 54

Page4: PCI Termination

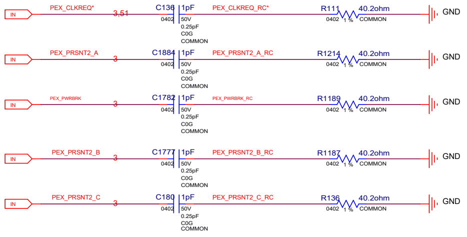
IN
PEX_CLKREQ*
3,51
C136
0402
1pF
50V
0.25pF
C0G
COMMON
PEX_CLKREQ_RC*
R111
0402
1 %
40.2ohm
COMMON
GND
IN
PEX_PRSNT2_A
3
C1884
0402
1pF
50V
0.25pF
C0G
COMMON
PEX_PRSNT2_A_RC
R1214
0402
1 %
40.2ohm
COMMON
GND
IN
PEX_PWRBRK
3
C1782
0402
1pF
50V
0.25pF
C0G
COMMON
PEX_PWRBRK_RC
R1189
0402
1 %
40.2ohm
COMMON
GND
IN
PEX_PRSNT2_B
3
C1777
0402
1pF
50V
0.25pF
C0G
COMMON
PEX_PRSNT2_B_RC
R1187
0402
1 %
40.2ohm
COMMON
GND
IN
PEX_PRSNT2_C
3
C180
0402
1pF
50V
0.25pF
C0G
COMMON
PEX_PRSNT2_C_RC
R136
0402
1 %
40.2ohm
COMMON
GND

PLACE CLOSE TO B81

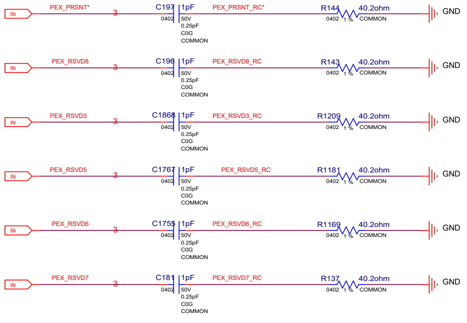
IN
PEX_PRSNT*
3
C197
0402
1pF
50V
0.25pF
C0G
COMMON
PEX_PRSNT_RC*
R144
0402
1 %
40.2ohm
COMMON
GND
IN
PEX_RSVD8
3
C196
0402
1pF
50V
0.25pF
C0G
COMMON
PEX_RSVD8_RC
R143
0402
1 %
40.2ohm
COMMON
GND
IN
PEX_RSVD3
3
C1868
0402
1pF
50V
0.25pF
C0G
COMMON
PEX_RSVD3_RC
R1209
0402
1 %
40.2ohm
COMMON
GND
IN
PEX_RSVD5
3
C1767
0402
1pF
50V
0.25pF
C0G
COMMON
PEX_RSVD5_RC
R1181
0402
1 %
40.2ohm
COMMON
GND
IN
PEX_RSVD6
3
C1755
0402
1pF
50V
0.25pF
C0G
COMMON
PEX_RSVD6_RC
R1169
0402
1 %
40.2ohm
COMMON
GND
IN
PEX_RSVD7
3
C181
0402
1pF
50V
0.25pF
C0G
COMMON
PEX_RSVD7_RC
R137
0402
1 %
40.2ohm
COMMON
GND

MICRO-STAR INT'L CO.,LTD

MS-V373

Size	Document Description	Rev
Custom	Page4:PCI Termination	7.0

Date: Tuesday, August 21, 2018 | Sheet 4 of 54

Page5: MEMORY: GPU Partition A/B

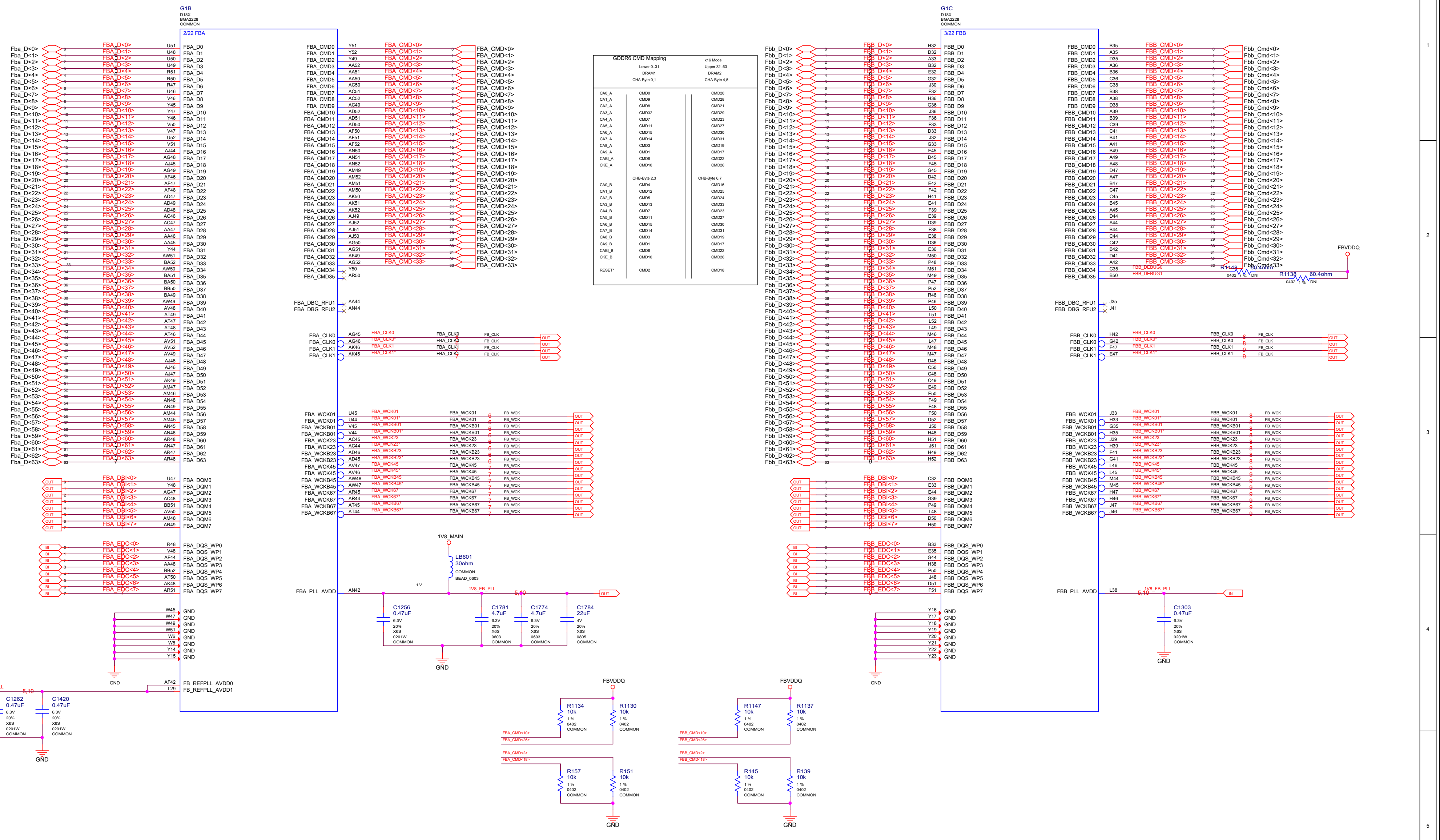
G1B
D18X
BGA2228
COMMON
2/22 FBA
G1C
D18X
BGA2228
COMMON
3/22 FBB
FBA_PLL_AVDD
FB_REFPLL_AVDD0
FB_REFPLL_AVDD1
FBB_PLL_AVDD
1V8_MAIN
LB601
30ohm
COMMON
BEAD_0603
1V8_FB_PLL
C1256
0.47uF
C1781
4.7uF
C1774
4.7uF
C1784
22uF
C1262
0.47uF
C1420
0.47uF
C1303
0.47uF
FBVDDQ
R1134
10k
R1130
10k
R157
10k
R151
10k
R1147
10k
R1137
10k
R145
10k
R139
10k
R1148
60.4ohm
R1138
60.4ohm
DNI
GND

	GDDR6 CMD Mapping	x16 Mode
	Lower 0..31	Upper 32..63
	DRAM1	DRAM2
	CHA-Byte 0,1	CHA-Byte 4,5
CA0_A	CMD0	CMD20
CA1_A	CMD9	CMD28
CA2_A	CMD8	CMD21
CA3_A	CMD32	CMD29
CA4_A	CMD7	CMD23
CA5_A	CMD11	CMD27
CA6_A	CMD15	CMD30
CA7_A	CMD14	CMD31
CA8_A	CMD3	CMD19
CA9_A	CMD1	CMD17
CABI_A	CMD6	CMD22
CKE_A	CMD10	CMD26
	CHB-Byte 2,3	CHB-Byte 6,7
CA0_B	CMD4	CMD16
CA1_B	CMD12	CMD25
CA2_B	CMD5	CMD24
CA3_B	CMD13	CMD33
CA4_B	CMD7	CMD23
CA5_B	CMD11	CMD27
CA6_B	CMD15	CMD30
CA7_B	CMD14	CMD31
CA8_B	CMD3	CMD19
CA9_B	CMD1	CMD17
CABI_B	CMD6	CMD22
CKE_B	CMD10	CMD26
RESET*	CMD2	CMD18

MICRO-STAR INT'L CO.,LTD

MS-V373

Size: Custom
Document Description: Page5:MEMORY_ GPU Partition A_B
Rev: 7.0
Date: Tuesday, August 21, 2018
Sheet 5 of 54

Page6: MEMORY: FBA Partition 31..0

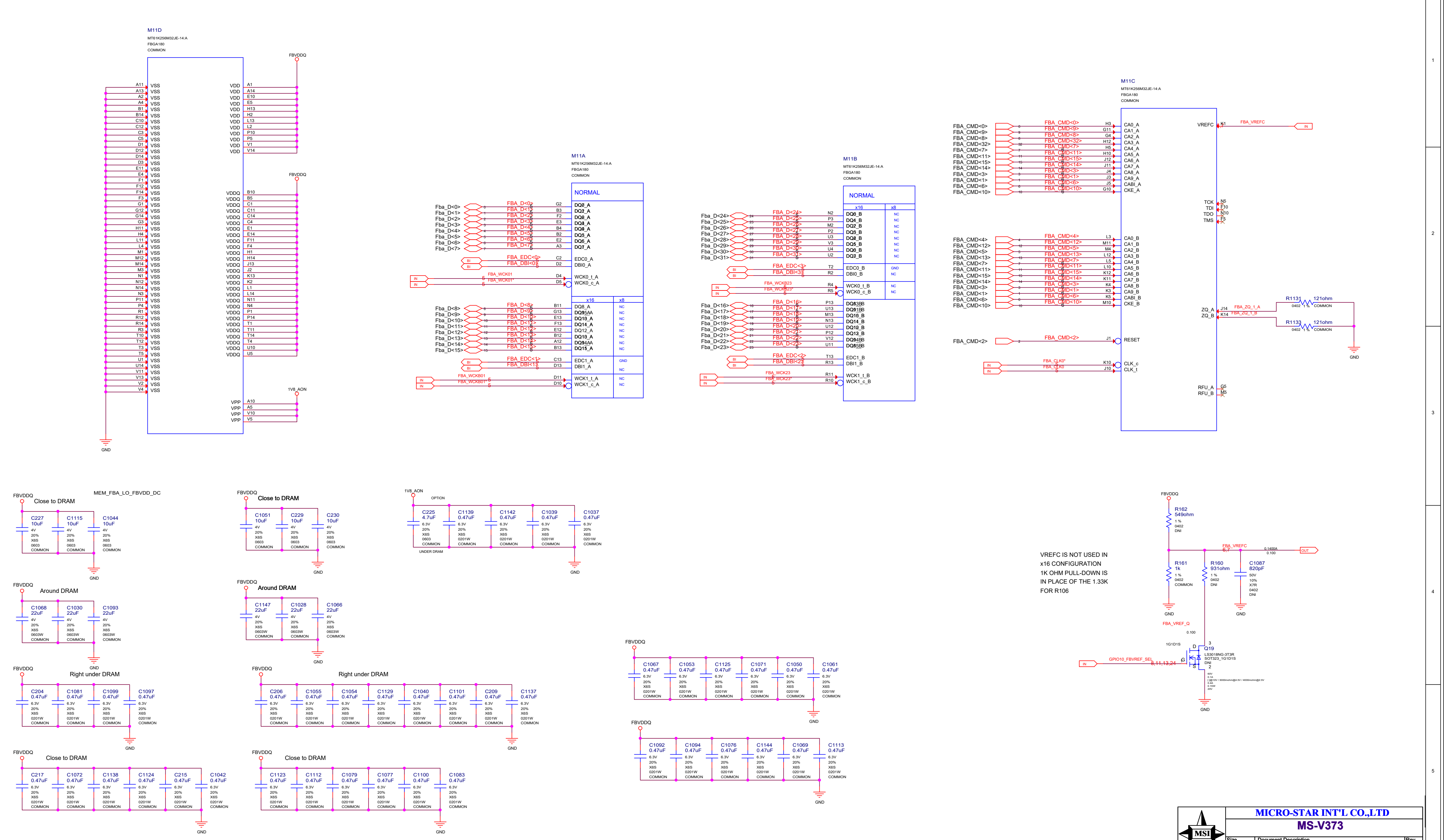
M11D
MT61K256M32JE-14:A
FBGA180
COMMON
FBVDDQ
1V8_AON
GND
M11A
NORMAL
M11B
M11C
VSS
VDD
VDDQ
VPP
x16
x8
NC
VREFC
FBA_VREFC
TCK
TDI
TDO
TMS
ZQ_A
ZQ_B
R1131
121ohm
R1133
121ohm
RESET
CLK_c
CLK_t
RFU_A
RFU_B
FBA_CMD<2>
FBA_CLK0*
FBA_CLK0
MEM_FBA_LO_FBVDD_DC
Close to DRAM
Around DRAM
Right under DRAM
OPTION
UNDER DRAM
C227 10uF
C1115 10uF
C1044 10uF
C1051 10uF
C229 10uF
C230 10uF
C225 4.7uF
C1139 0.47uF
C1142 0.47uF
C1039 0.47uF
C1037 0.47uF
C1068 22uF
C1030 22uF
C1093 22uF
C1147 22uF
C1028 22uF
C1066 22uF
C204 0.47uF
C1081 0.47uF
C1099 0.47uF
C1097 0.47uF
C206 0.47uF
C1055 0.47uF
C1054 0.47uF
C1129 0.47uF
C1040 0.47uF
C1101 0.47uF
C209 0.47uF
C1137 0.47uF
C217 0.47uF
C1072 0.47uF
C1138 0.47uF
C1124 0.47uF
C215 0.47uF
C1042 0.47uF
C1123 0.47uF
C1112 0.47uF
C1079 0.47uF
C1077 0.47uF
C1100 0.47uF
C1083 0.47uF
C1067 0.47uF
C1053 0.47uF
C1125 0.47uF
C1071 0.47uF
C1050 0.47uF
C1061 0.47uF
C1092 0.47uF
C1094 0.47uF
C1076 0.47uF
C1144 0.47uF
C1069 0.47uF
C1113 0.47uF
R162 549ohm
R161 1k
R160 931ohm
C1087 820pF
FBA_VREFC
FBA_VREF_Q
Q19
LS3018NG-3T3R
SOT323_1G1D1S
DNI
GPIO10_FBVREF_SEL
VREFC IS NOT USED IN
x16 CONFIGURATION
1K OHM PULL-DOWN IS
IN PLACE OF THE 1.33K
FOR R106

MICRO-STAR INT'L CO.,LTD

MS-V373

Size	Document Description	Rev
Custom	Page6:MEMORY_ FBA Partition 31..	7.0

Date: Tuesday, August 21, 2018 Sheet 6 of 54

Page7: MEMORY: FBA Partition 63..32

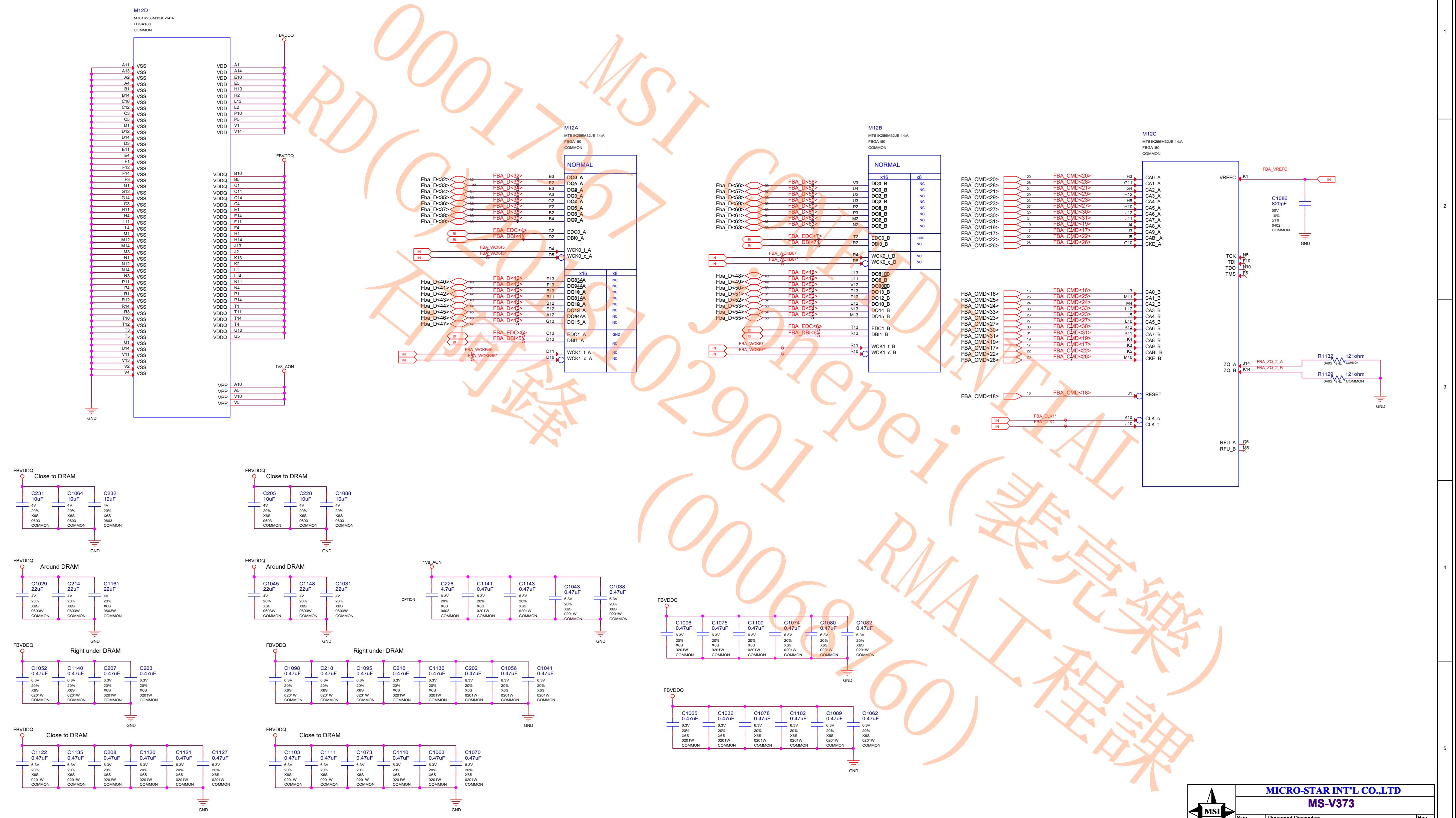
M12D
MT61K256M32JE-14:A
FBGA180
COMMON
VSS
VDD
VDDQ
VPP
FBVDDQ
1V8_AON
GND
M12A
NORMAL
Fba_D<32>
Fba_D<33>
Fba_D<34>
Fba_D<35>
Fba_D<36>
Fba_D<37>
Fba_D<38>
Fba_D<39>
FBA_EDC<4>
FBA_DBI<4>
FBA_WCK45
FBA_WCK45*
EDC0_A
DBI0_A
WCK0_t_A
WCK0_c_A
Fba_D<40>
Fba_D<41>
Fba_D<42>
Fba_D<43>
Fba_D<44>
Fba_D<45>
Fba_D<46>
Fba_D<47>
FBA_EDC<5>
FBA_DBI<5>
FBA_WCKB45
FBA_WCKB45*
EDC1_A
DBI1_A
WCK1_t_A
WCK1_c_A
M12B
Fba_D<56>
Fba_D<57>
Fba_D<58>
Fba_D<59>
Fba_D<60>
Fba_D<61>
Fba_D<62>
Fba_D<63>
FBA_EDC<7>
FBA_DBI<7>
FBA_WCKB67
FBA_WCKB67*
EDC0_B
DBI0_B
WCK0_t_B
WCK0_c_B
Fba_D<48>
Fba_D<49>
Fba_D<50>
Fba_D<51>
Fba_D<52>
Fba_D<53>
Fba_D<54>
Fba_D<55>
FBA_EDC<6>
FBA_DBI<6>
FBA_WCK67
FBA_WCK67*
EDC1_B
DBI1_B
WCK1_t_B
WCK1_c_B
M12C
FBA_CMD<20>
FBA_CMD<28>
FBA_CMD<21>
FBA_CMD<29>
FBA_CMD<23>
FBA_CMD<27>
FBA_CMD<30>
FBA_CMD<31>
FBA_CMD<19>
FBA_CMD<17>
FBA_CMD<22>
FBA_CMD<26>
CA0_A
CA1_A
CA2_A
CA3_A
CA4_A
CA5_A
CA6_A
CA7_A
CA8_A
CA9_A
CABI_A
CKE_A
FBA_CMD<16>
FBA_CMD<25>
FBA_CMD<24>
FBA_CMD<33>
FBA_CMD<23>
FBA_CMD<27>
FBA_CMD<30>
FBA_CMD<31>
FBA_CMD<19>
FBA_CMD<17>
FBA_CMD<22>
FBA_CMD<26>
CA0_B
CA1_B
CA2_B
CA3_B
CA4_B
CA5_B
CA6_B
CA7_B
CA8_B
CA9_B
CABI_B
CKE_B
FBA_CMD<18>
RESET
FBA_CLK1*
FBA_CLK1
CLK_c
CLK_t
VREFC
FBA_VREFC
C1086
820pF
TCK
TDI
TDO
TMS
ZQ_A
ZQ_B
FBA_ZQ_2_A
FBA_ZQ_2_B
R1132
121ohm
R1129
121ohm
RFU_A
RFU_B
Close to DRAM
C231 10uF
C1064 10uF
C232 10uF
C205 10uF
C228 10uF
C1088 10uF
Around DRAM
C1029 22uF
C214 22uF
C1161 22uF
C1045 22uF
C1148 22uF
C1031 22uF
OPTION
C226 4.7uF
C1141 0.47uF
C1143 0.47uF
C1043 0.47uF
C1038 0.47uF
C1096 0.47uF
C1075 0.47uF
C1109 0.47uF
C1074 0.47uF
C1080 0.47uF
C1082 0.47uF
Right under DRAM
C1052 0.47uF
C1140 0.47uF
C207 0.47uF
C203 0.47uF
C1098 0.47uF
C218 0.47uF
C1095 0.47uF
C216 0.47uF
C1136 0.47uF
C202 0.47uF
C1056 0.47uF
C1041 0.47uF
C1065 0.47uF
C1036 0.47uF
C1078 0.47uF
C1102 0.47uF
C1089 0.47uF
C1062 0.47uF
C1122 0.47uF
C1135 0.47uF
C208 0.47uF
C1120 0.47uF
C1121 0.47uF
C1127 0.47uF
C1103 0.47uF
C1111 0.47uF
C1073 0.47uF
C1110 0.47uF
C1063 0.47uF
C1070 0.47uF

MSI CONFIDENTIAL
000170267
RD(CS)08102901 石國鋒
Jonepei(裴亮樂)
(00062760)
RMA工程課

MICRO-STAR INT'L CO.,LTD
MS-V373
Size: Custom
Document Description: Page7:MEMORY_ FBA Partition 63..
Rev: 7.0
Date: Tuesday, August 21, 2018
Sheet 7 of 54

Page8: MEMORY: FBB Partition 31..0

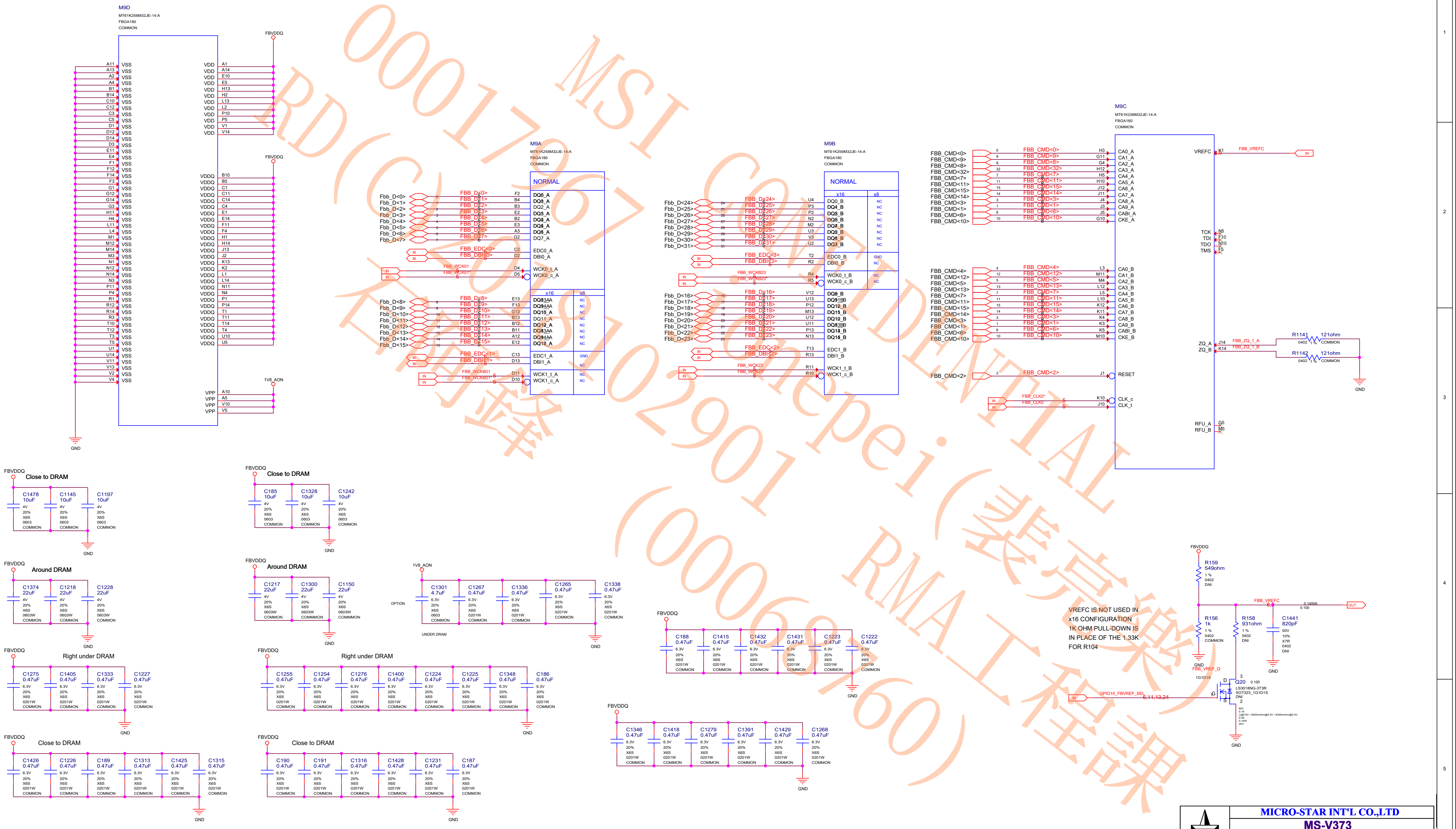

M9D
MT61K256M32JE-14:A
FBGA180
COMMON
VSS
VDD
VDDQ
VPP
FBVDDQ
1V8_AON
GND
M9A
M9B
M9C
NORMAL
x16
x8
NC
Fbb_D<0> … Fbb_D<31>
FBB_D<0> … FBB_D<31>
DQ0_A … DQ15_A
DQ0_B … DQ15_B
FBB_EDC<0>
FBB_DBI<0>
FBB_EDC<1>
FBB_DBI<1>
FBB_EDC<2>
FBB_DBI<2>
FBB_EDC<3>
FBB_DBI<3>
EDC0_A
DBI0_A
EDC1_A
DBI1_A
EDC0_B
DBI0_B
EDC1_B
DBI1_B
FBB_WCK01
FBB_WCK01*
FBB_WCKB01
FBB_WCKB01*
FBB_WCK23
FBB_WCK23*
FBB_WCKB23
FBB_WCKB23*
WCK0_t_A
WCK0_c_A
WCK1_t_A
WCK1_c_A
WCK0_t_B
WCK0_c_B
WCK1_t_B
WCK1_c_B
IN
BI
FBB_CMD<0> … FBB_CMD<32>
CA0_A … CA9_A
CABI_A
CKE_A
CA0_B … CA9_B
CABI_B
CKE_B
VREFC
FBB_VREFC
TCK
TDI
TDO
TMS
ZQ_A
ZQ_B
FBB_ZQ_1_A
FBB_ZQ_1_B
R1141 121ohm
R1142 121ohm
RESET
FBB_CMD<2>
CLK_c
CLK_t
FBB_CLK0*
FBB_CLK0
RFU_A
RFU_B
Close to DRAM
Around DRAM
Right under DRAM
OPTION
UNDER DRAM
C1478 10uF
C1145 10uF
C1197 10uF
C185 10uF
C1328 10uF
C1242 10uF
C1374 22uF
C1218 22uF
C1228 22uF
C1217 22uF
C1300 22uF
C1150 22uF
C1301 4.7uF
C1267 0.47uF
C1336 0.47uF
C1265 0.47uF
C1338 0.47uF
C188 0.47uF
C1415 0.47uF
C1432 0.47uF
C1431 0.47uF
C1223 0.47uF
C1222 0.47uF
C1275 0.47uF
C1405 0.47uF
C1333 0.47uF
C1227 0.47uF
C1255 0.47uF
C1254 0.47uF
C1276 0.47uF
C1400 0.47uF
C1224 0.47uF
C1225 0.47uF
C1348 0.47uF
C186 0.47uF
C1346 0.47uF
C1418 0.47uF
C1279 0.47uF
C1391 0.47uF
C1429 0.47uF
C1268 0.47uF
C1426 0.47uF
C1226 0.47uF
C189 0.47uF
C1313 0.47uF
C1425 0.47uF
C1315 0.47uF
C190 0.47uF
C191 0.47uF
C1316 0.47uF
C1428 0.47uF
C1231 0.47uF
C187 0.47uF
R159 549ohm
R156 1k
R158 931ohm
C1441 820pF
DNI
FBB_VREF_Q
Q20
LS3018NG-3T3R
SOT323_1G1D1S
GPIO10_FBVREF_SEL
6,11,13,24
OUT

VREFC IS NOT USED IN
x16 CONFIGURATION
1K OHM PULL-DOWN IS
IN PLACE OF THE 1.33K
FOR R104

MICRO-STAR INT'L CO.,LTD

MS-V373

Size: Custom
Document Description: Page8:MEMORY_ FBB Partition 31..
Rev: 7.0
Date: Tuesday, August 21, 2018
Sheet 8 of 54

MSI CONFIDENTIAL
00017967
RD(C)2018102901
liangpei(裴亮樂)
(00069760)
RMA工程課

Page9: MEMORY: FBB Partition 63..32

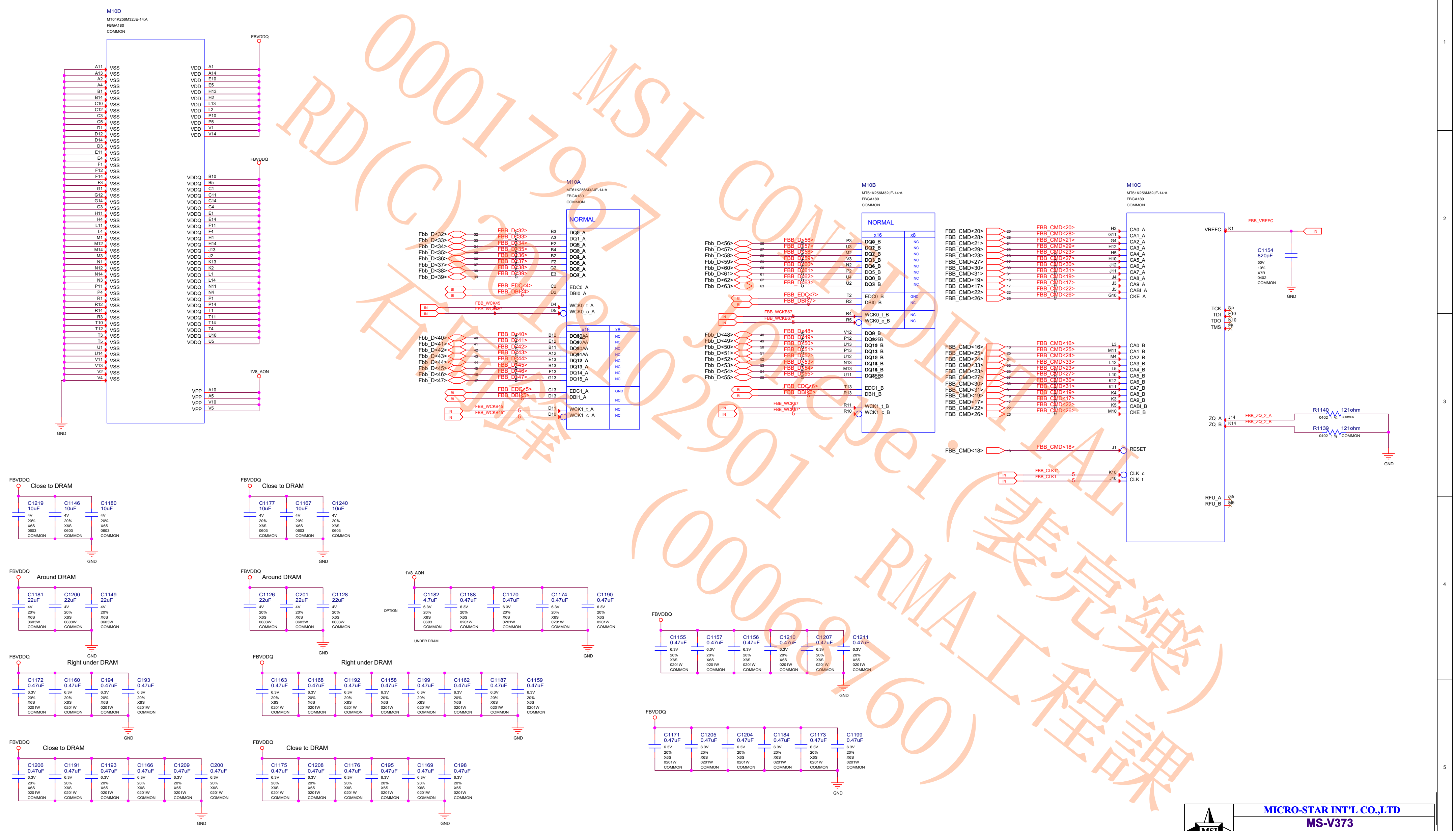
M10D
MT61K256M32JE-14:A
FBGA180
COMMON
VSS
VDD
VDDQ
VPP
FBVDDQ
1V8_AON
GND
M10A
M10B
M10C
NORMAL
x16
x8
Fbb_D<32>
Fbb_D<47>
Fbb_D<48>
Fbb_D<63>
FBB_EDC<4>
FBB_DBI<4>
FBB_WCK45
FBB_WCKB45
FBB_EDC<5>
FBB_DBI<5>
FBB_EDC<6>
FBB_DBI<6>
FBB_EDC<7>
FBB_DBI<7>
FBB_WCK67
FBB_WCKB67
EDC0_A
DBI0_A
WCK0_t_A
WCK0_c_A
EDC1_A
DBI1_A
WCK1_t_A
WCK1_c_A
EDC0_B
DBI0_B
WCK0_t_B
WCK0_c_B
EDC1_B
DBI1_B
WCK1_t_B
WCK1_c_B
FBB_CMD<16>
FBB_CMD<33>
FBB_CMD<18>
CA0_A
CKE_A
CA0_B
CKE_B
CABI_A
CABI_B
VREFC
FBB_VREFC
C1154
820pF
50V
10%
X7R
0402
TCK
TDI
TDO
TMS
ZQ_A
ZQ_B
FBB_ZQ_2_A
FBB_ZQ_2_B
R1140
R1139
121ohm
RESET
FBB_CLK1
FBB_CLK1*
CLK_c
CLK_t
RFU_A
RFU_B
IN
BI
NC
Close to DRAM
Around DRAM
Right under DRAM
UNDER DRAM
OPTION
10uF
22uF
4.7uF
0.47uF
4V
6.3V
20%
X6S
0603
0603W
0201W

00017967 RD(C)20181029 石明峰
MSI CONFIDENTIAL
(裴亮樂) (00069760) RMA工程課

MICRO-STAR INT'L CO.,LTD

MS-V373

Size	Document Description	Rev
Custom	Page9:MEMORY_ FBB Partition 63..	7.0

Date: Tuesday, August 21, 2018 Sheet 9 of 54

Page10: MEMORY: GPU Partition C/D

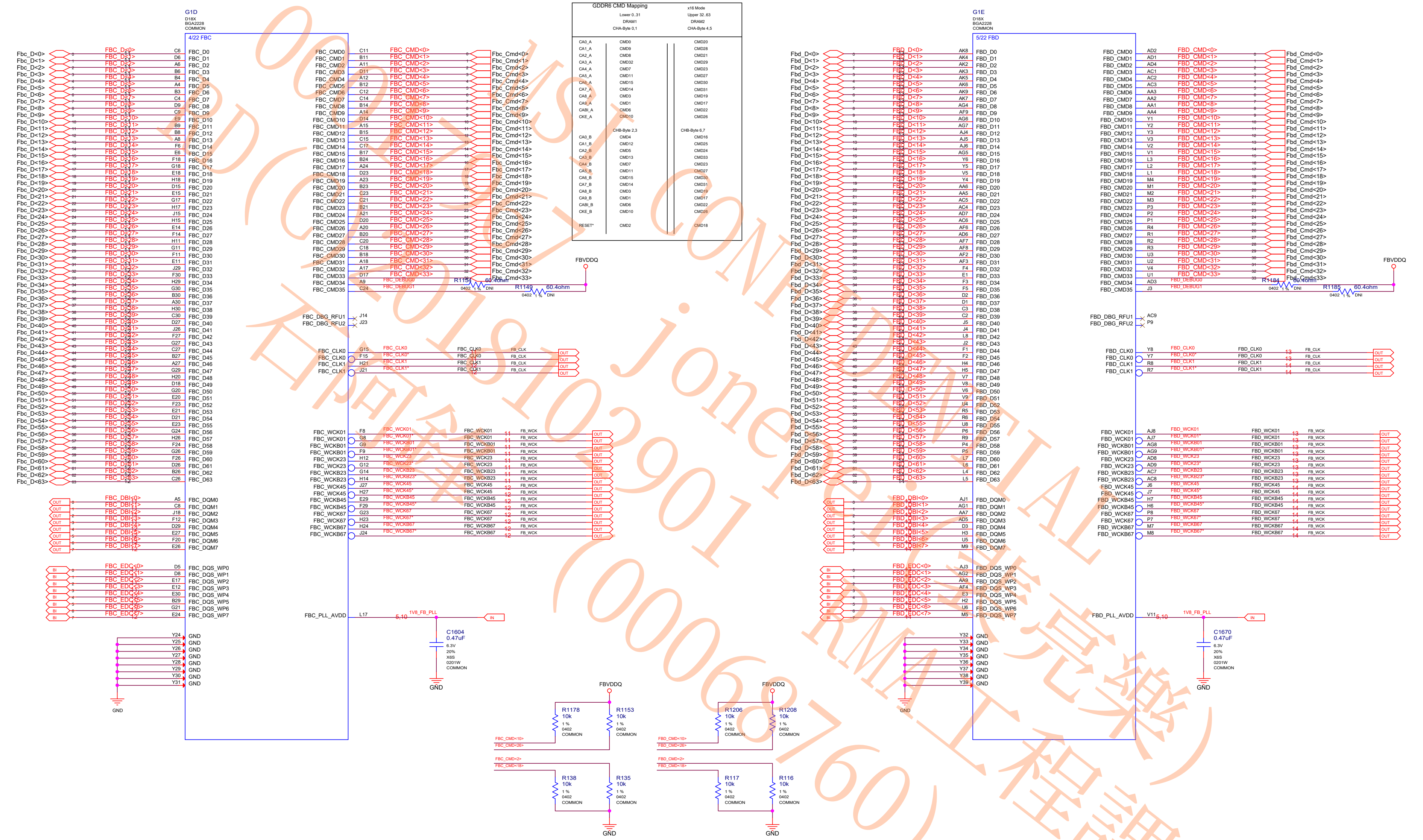

G1D
D18X
BGA2228
COMMON
4/22 FBC
Fbc_D<0> … Fbc_D<63>
FBC_D<0> … FBC_D<63>
FBC_D0 … FBC_D63
FBC_CMD0 … FBC_CMD35
FBC_CMD<0> … FBC_CMD<33>
Fbc_Cmd<0> … Fbc_Cmd<33>
FBC_DEBUG0
FBC_DEBUG1
FBC_DBG_RFU1
FBC_DBG_RFU2
FBC_CLK0
FBC_CLK0*
FBC_CLK1
FBC_CLK1*
FB_CLK
OUT
FBC_WCK01
FBC_WCK01*
FBC_WCKB01
FBC_WCKB01*
FBC_WCK23
FBC_WCK23*
FBC_WCKB23
FBC_WCKB23*
FBC_WCK45
FBC_WCK45*
FBC_WCKB45
FBC_WCKB45*
FBC_WCK67
FBC_WCK67*
FBC_WCKB67
FBC_WCKB67*
FB_WCK
FBC_DBI<0> … FBC_DBI<7>
FBC_DQM0 … FBC_DQM7
FBC_EDC<0> … FBC_EDC<7>
FBC_DQS_WP0 … FBC_DQS_WP7
BI
FBC_PLL_AVDD
L17
1V8_FB_PLL
IN
C1604
0.47uF
6.3V
20%
X6S
0201W
COMMON
GND
FBVDDQ
R1151
R1149
60.4ohm
0402
1 %
DNI
G1E
D18X
BGA2228
COMMON
5/22 FBD
Fbd_D<0> … Fbd_D<63>
FBD_D<0> … FBD_D<63>
FBD_D0 … FBD_D63
FBD_CMD0 … FBD_CMD35
FBD_CMD<0> … FBD_CMD<33>
Fbd_Cmd<0> … Fbd_Cmd<33>
FBD_DEBUG0
FBD_DEBUG1
FBD_DBG_RFU1
FBD_DBG_RFU2
FBD_CLK0
FBD_CLK0*
FBD_CLK1
FBD_CLK1*
FBD_WCK01 … FBD_WCKB67*
FBD_DBI<0> … FBD_DBI<7>
FBD_DQM0 … FBD_DQM7
FBD_EDC<0> … FBD_EDC<7>
FBD_DQS_WP0 … FBD_DQS_WP7
FBD_PLL_AVDD
V11
C1670
0.47uF
R1184
R1185
R1178
R1153
R1206
R1208
R138
R135
R117
R116
10k
1 %
0402
COMMON
FBC_CMD<10>
FBC_CMD<26>
FBC_CMD<2>
FBC_CMD<18>
FBD_CMD<10>
FBD_CMD<26>
FBD_CMD<2>
FBD_CMD<18>

GDDR6 CMD Mapping

x16 Mode

	Lower 0..31 DRAM1 CHA-Byte 0,1	Upper 32..63 DRAM2 CHA-Byte 4,5
CA0_A	CMD0	CMD20
CA1_A	CMD9	CMD28
CA2_A	CMD8	CMD21
CA3_A	CMD32	CMD29
CA4_A	CMD7	CMD23
CA5_A	CMD11	CMD27
CA6_A	CMD15	CMD30
CA7_A	CMD14	CMD31
CA8_A	CMD3	CMD19
CA9_A	CMD1	CMD17
CABI_A	CMD6	CMD22
CKE_A	CMD10	CMD26
	CHB-Byte 2,3	CHB-Byte 6,7
CA0_B	CMD4	CMD16
CA1_B	CMD12	CMD25
CA2_B	CMD5	CMD24
CA3_B	CMD13	CMD33
CA4_B	CMD7	CMD23
CA5_B	CMD11	CMD27
CA6_B	CMD15	CMD30
CA7_B	CMD14	CMD31
CA8_B	CMD3	CMD19
CA9_B	CMD1	CMD17
CABI_B	CMD6	CMD22
CKE_B	CMD10	CMD26
RESET*	CMD2	CMD18

MSI

MICRO-STAR INT'L CO.,LTD

MS-V373

Size	Document Description	Rev
Custom	Page10:MEMORY_ GPU Partition C_D	7.0

Date: Tuesday, August 21, 2018 | Sheet 10 of 54

Page11: MEMORY: FBC Partition 31..0

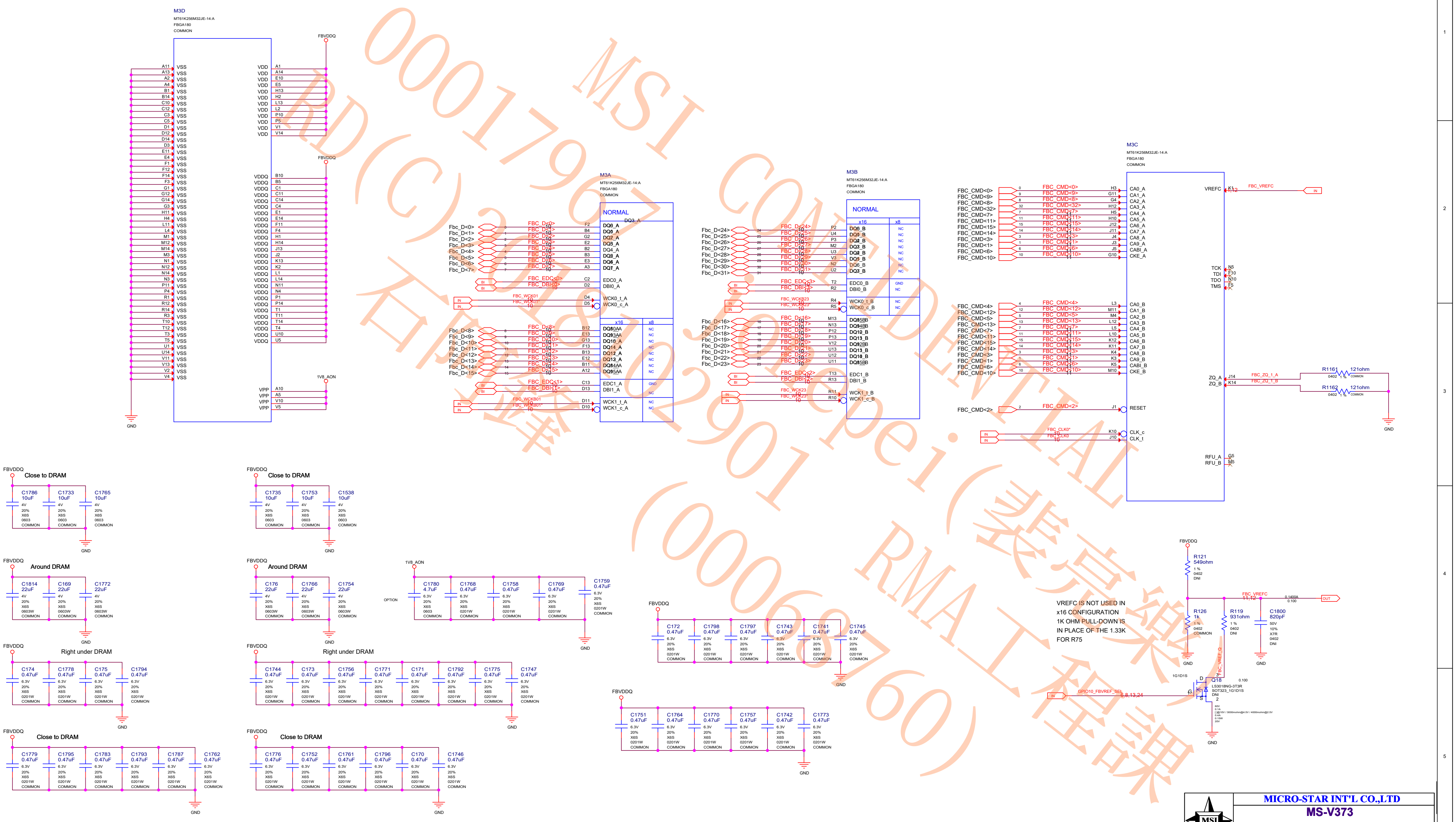
M3D
MT61K256M32JE-14:A
FBGA180
COMMON
FBVDDQ
VSS
VDD
VDDQ
VPP
1V8_AON
GND
M3A
NORMAL
M3B
M3C
FBC_D<0>
FBC_EDC0
FBC_DBI0
FBC_WCK01
FBC_CMD<0>
VREFC
FBC_VREFC
RESET
CLK_c
CLK_t
ZQ_A
ZQ_B
R1161 121ohm
R1162 121ohm
RFU_A
RFU_B
Close to DRAM
Around DRAM
Right under DRAM
OPTION
R121 549ohm
R126 1K
R119 931ohm
C1800 820pF
Q18
LS3018NG-3T3R
GPIO10_FBVREF_SEL
VREFC IS NOT USED IN
x16 CONFIGURATION
1K OHM PULL-DOWN IS
IN PLACE OF THE 1.33K
FOR R75

MICRO-STAR INT'L CO.,LTD

MS-V373

Size: Custom
Document Description: Page11:MEMORY_ FBC Partition 31..
Rev: 7.0
Date: Tuesday, August 21, 2018
Sheet 11 of 54

Page12: MEMORY: FBC Partition 63..32

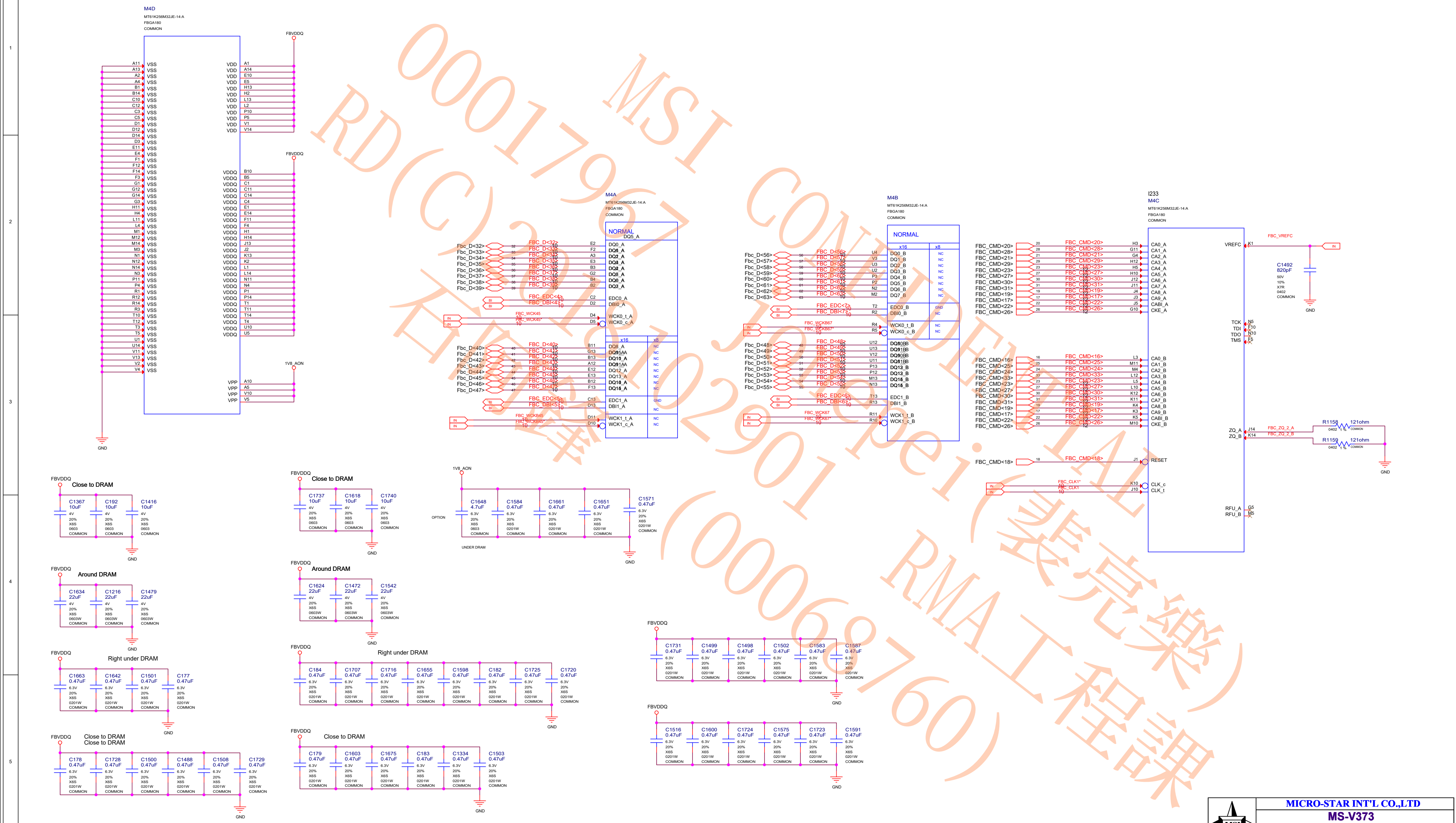

M4D
MT61K256M32JE-14:A
FBGA180
COMMON
VSS
VDD
VDDQ
VPP
FBVDDQ
1V8_AON
GND
M4A
MT61K256M32JE-14:A
FBGA180
COMMON
NORMAL
Fbc_D<32>
Fbc_D<33>
Fbc_D<34>
Fbc_D<35>
Fbc_D<36>
Fbc_D<37>
Fbc_D<38>
Fbc_D<39>
FBC_EDC<4>
FBC_DBI<4>
FBC_WCK45
FBC_WCK45*
Fbc_D<40>
Fbc_D<41>
Fbc_D<42>
Fbc_D<43>
Fbc_D<44>
Fbc_D<45>
Fbc_D<46>
Fbc_D<47>
FBC_EDC<5>
FBC_DBI<5>
FBC_WCKB45
FBC_WCKB45*
DQ0_A
EDC0_A
DBI0_A
WCK0_t_A
WCK0_c_A
EDC1_A
DBI1_A
WCK1_t_A
WCK1_c_A
x16
x8
NC
GND
M4B
MT61K256M32JE-14:A
FBGA180
COMMON
Fbc_D<56>
Fbc_D<57>
Fbc_D<58>
Fbc_D<59>
Fbc_D<60>
Fbc_D<61>
Fbc_D<62>
Fbc_D<63>
FBC_EDC<7>
FBC_DBI<7>
FBC_WCKB67
FBC_WCKB67*
Fbc_D<48>
Fbc_D<49>
Fbc_D<50>
Fbc_D<51>
Fbc_D<52>
Fbc_D<53>
Fbc_D<54>
Fbc_D<55>
FBC_EDC<6>
FBC_DBI<6>
FBC_WCK67
FBC_WCK67*
EDC0_B
DBI0_B
WCK0_t_B
WCK0_c_B
EDC1_B
DBI1_B
WCK1_t_B
WCK1_c_B
I233
M4C
MT61K256M32JE-14:A
FBGA180
COMMON
FBC_CMD<20>
FBC_CMD<28>
FBC_CMD<21>
FBC_CMD<29>
FBC_CMD<23>
FBC_CMD<27>
FBC_CMD<30>
FBC_CMD<31>
FBC_CMD<19>
FBC_CMD<17>
FBC_CMD<22>
FBC_CMD<26>
FBC_CMD<16>
FBC_CMD<25>
FBC_CMD<24>
FBC_CMD<33>
FBC_CMD<18>
CA0_A
CA1_A
CA2_A
CA3_A
CA4_A
CA5_A
CA6_A
CA7_A
CA8_A
CA9_A
CABI_A
CKE_A
CA0_B
CA1_B
CA2_B
CA3_B
CA4_B
CA5_B
CA6_B
CA7_B
CA8_B
CA9_B
CABI_B
CKE_B
RESET
FBC_CLK1*
FBC_CLK1
CLK_c
CLK_t
VREFC
FBC_VREFC
C1492
820pF
50V
10%
X7R
0402
TCK
TDI
TDO
TMS
ZQ_A
ZQ_B
FBC_ZQ_2_A
FBC_ZQ_2_B
R1158
121ohm
R1159
121ohm
RFU_A
RFU_B
FBVDDQ
Close to DRAM
C1367 10uF
C192 10uF
C1416 10uF
Around DRAM
C1634 22uF
C1216 22uF
C1479 22uF
Right under DRAM
C1663 0.47uF
C1642 0.47uF
C1501 0.47uF
C177 0.47uF
Close to DRAM
C178 0.47uF
C1728 0.47uF
C1500 0.47uF
C1488 0.47uF
C1508 0.47uF
C1729 0.47uF
Close to DRAM
C1737 10uF
C1618 10uF
C1740 10uF
Around DRAM
C1624 22uF
C1472 22uF
C1542 22uF
Right under DRAM
C184 0.47uF
C1707 0.47uF
C1716 0.47uF
C1655 0.47uF
C1598 0.47uF
C182 0.47uF
C1725 0.47uF
C1720 0.47uF
Close to DRAM
C179 0.47uF
C1603 0.47uF
C1675 0.47uF
C183 0.47uF
C1334 0.47uF
C1503 0.47uF
1V8_AON
OPTION
C1648 4.7uF
C1584 0.47uF
C1661 0.47uF
C1651 0.47uF
C1571 0.47uF
UNDER DRAM
C1731 0.47uF
C1499 0.47uF
C1498 0.47uF
C1502 0.47uF
C1583 0.47uF
C1587 0.47uF
C1516 0.47uF
C1600 0.47uF
C1724 0.47uF
C1575 0.47uF
C1723 0.47uF
C1591 0.47uF

MSI CONFIDENTIAL
00017967 RD(C)2018102901 石俊峰
Joe Pei(裴亮樂)(00068760) RMA工程課

MICRO-STAR INT'L CO.,LTD

MS-V373

Size	Document Description	Rev
Custom	Page12:MEMORY_ FBC Partition 63..	7.0

Date: Tuesday, August 21, 2018 Sheet 12 of 54

Page13: MEMORY: FBD Partition 31..0

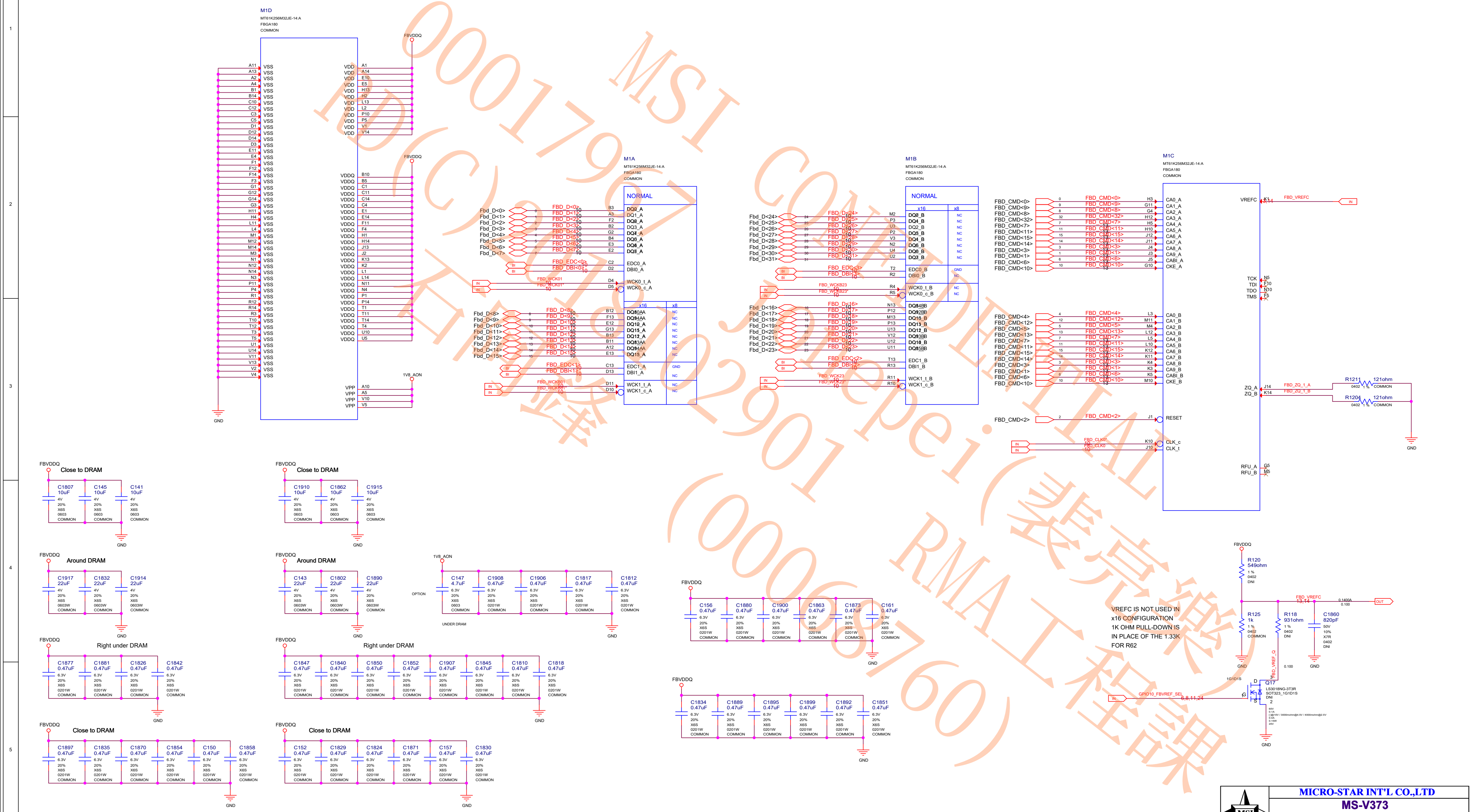
M1D
MT61K256M32JE-14:A
FBGA180
COMMON
FBVDDQ
VSS
VDD
VDDQ
VPP
1V8_AON
GND
M1A
NORMAL
Fbd_D<0>
Fbd_D<1>
Fbd_D<2>
Fbd_D<3>
Fbd_D<4>
Fbd_D<5>
Fbd_D<6>
Fbd_D<7>
FBD_EDC<0>
FBD_DBI<0>
FBD_WCK01
FBD_WCK01*
EDC0_A
DBI0_A
WCK0_t_A
WCK0_c_A
x16
x8
NC
Fbd_D<8>
Fbd_D<15>
EDC1_A
DBI1_A
WCK1_t_A
WCK1_c_A
M1B
Fbd_D<24>
Fbd_D<31>
FBD_WCKB23
FBD_WCKB23*
Fbd_D<16>
Fbd_D<23>
EDC0_B
DBI0_B
WCK0_t_B
WCK0_c_B
EDC1_B
DBI1_B
WCK1_t_B
WCK1_c_B
M1C
FBD_CMD<0>
FBD_CMD<10>
CA0_A
CABI_A
CKE_A
VREFC
FBD_VREFC
TCK
TDI
TDO
TMS
CA0_B
CABI_B
CKE_B
ZQ_A
ZQ_B
FBD_ZQ_1_A
FBD_ZQ_1_B
R121
R1204
121ohm
RESET
FBD_CMD<2>
FBD_CLK0*
FBD_CLK0
CLK_c
CLK_t
RFU_A
RFU_B
Close to DRAM
Around DRAM
Right under DRAM
OPTION
UNDER DRAM
C1807
C145
C141
10uF
C1910
C1862
C1915
C1917
C1832
C1914
22uF
C143
C1802
C1890
C147
4.7uF
C1908
C1906
C1817
C1812
0.47uF
C156
C1880
C1900
C1863
C1873
C161
C1877
C1881
C1826
C1842
C1847
C1840
C1850
C1852
C1907
C1845
C1810
C1818
C1834
C1889
C1895
C1899
C1892
C1851
C1897
C1835
C1870
C1854
C150
C1858
C152
C1829
C1824
C1871
C157
C1830
R120
549ohm
R125
1k
R118
931ohm
C1860
820pF
Q17
LS3018NG-3T3R
SOT323_1G1D1S
DNI
GPIO10_FBVREF_SEL
OUT
IN

VREFC IS NOT USED IN
x16 CONFIGURATION
1K OHM PULL-DOWN IS
IN PLACE OF THE 1.33K
FOR R62

00017967 RD(C)-石國緯
MSI CONFIDENTIAL
2018102901 Jelepei(裴亮樂)
(00068760) RMA工程課

MICRO-STAR INT'L CO.,LTD

MS-V373

Size	Document Description	Rev
Custom	Page13:MEMORY_ FBD Partition 31..	7.0

Date: Tuesday, August 21, 2018 Sheet 13 of 54

Page14: MEMORY: FBD Partition 63..32

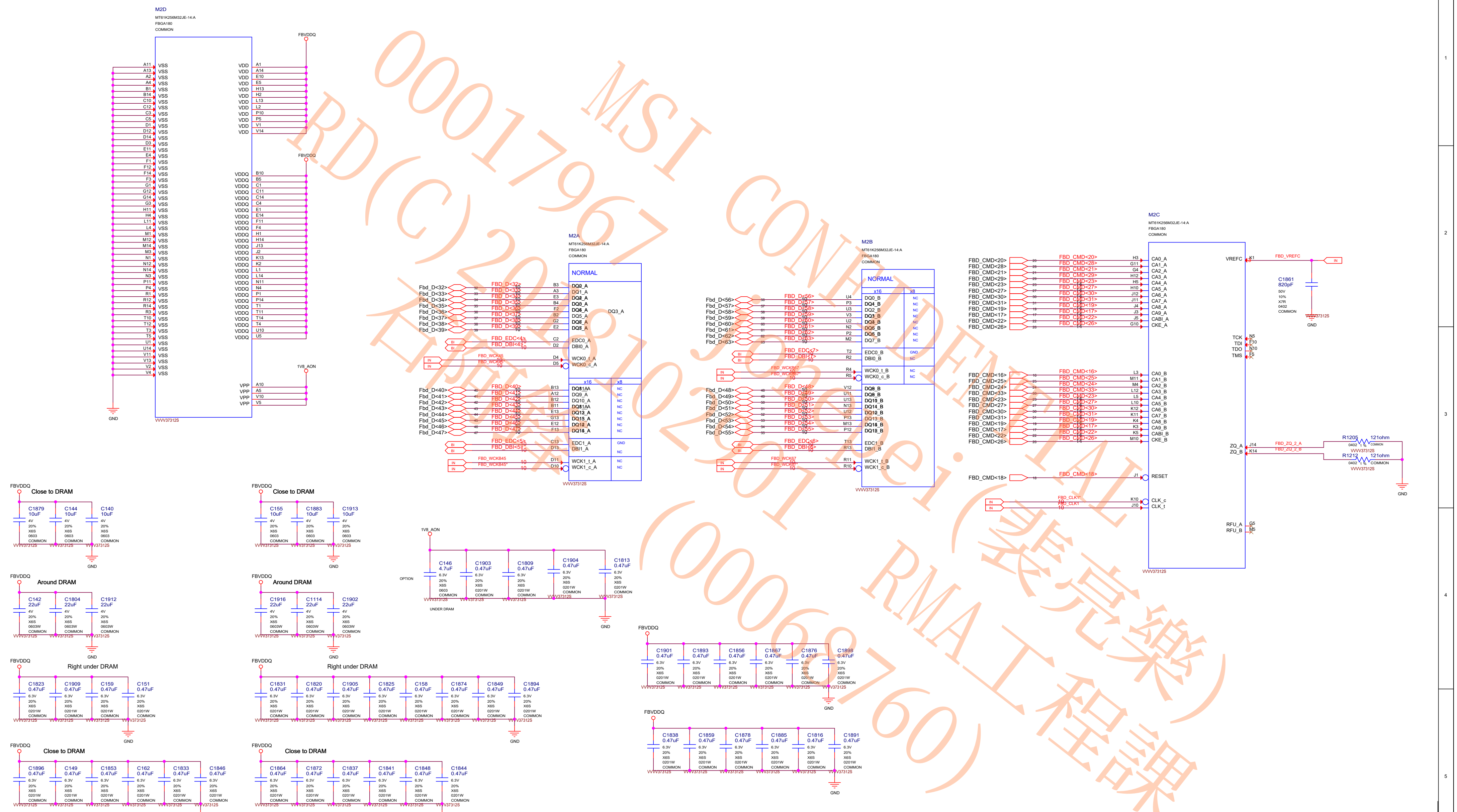
M2D
MT61K256M32JE-14:A
FBGA180
COMMON
FBVDDQ
VSS
VDD
VDDQ
VPP
1V8_AON
GND
M2A
NORMAL
Fbd_D<32> … Fbd_D<47>
FBD_EDC<4>
FBD_DBI<4>
FBD_WCK45
FBD_WCK45*
EDC0_A
DBI0_A
WCK0_t_A
WCK0_c_A
EDC1_A
DBI1_A
WCK1_t_A
WCK1_c_A
M2B
NORMAL
Fbd_D<48> … Fbd_D<63>
FBD_EDC<7>
FBD_DBI<7>
FBD_WCK67
FBD_WCK67*
M2C
FBD_CMD<16> … FBD_CMD<33>
CA0_A … CKE_A
CA0_B … CKE_B
VREFC
FBD_VREFC
C1861 820pF
TCK
TDI
TDO
TMS
ZQ_A
ZQ_B
FBD_ZQ_2_A
FBD_ZQ_2_B
R1205 121ohm
R1212 121ohm
FBD_CMD<18>
RESET
FBD_CLK1
FBD_CLK1*
CLK_c
CLK_t
RFU_A
RFU_B
Close to DRAM
Around DRAM
Right under DRAM
UNDER DRAM
OPTION
C1879 10uF
C144 10uF
C140 10uF
C155 10uF
C1883 10uF
C1913 10uF
C142 22uF
C1804 22uF
C1912 22uF
C1916 22uF
C1114 22uF
C1902 22uF
C146 4.7uF
C1903 0.47uF
C1809 0.47uF
C1904 0.47uF
C1813 0.47uF
C1823 0.47uF
C1909 0.47uF
C159 0.47uF
C151 0.47uF
C1831 0.47uF
C1820 0.47uF
C1905 0.47uF
C1825 0.47uF
C158 0.47uF
C1874 0.47uF
C1849 0.47uF
C1894 0.47uF
C1901 0.47uF
C1893 0.47uF
C1856 0.47uF
C1867 0.47uF
C1876 0.47uF
C1898 0.47uF
C1838 0.47uF
C1859 0.47uF
C1878 0.47uF
C1885 0.47uF
C1816 0.47uF
C1891 0.47uF
C1896 0.47uF
C149 0.47uF
C1853 0.47uF
C162 0.47uF
C1833 0.47uF
C1846 0.47uF
C1864 0.47uF
C1872 0.47uF
C1837 0.47uF
C1841 0.47uF
C1848 0.47uF
C1844 0.47uF
VVV37312S

MSI CONFIDENTIAL
00017967 RD(C)20180201
(00068760) RMA工程課
(裴亮樂)

MICRO-STAR INT'L CO.,LTD

MS-V373

Size	Document Description	Rev
Custom	Page14:MEMORY_ FBD Partition 63..	7.0

Date: Tuesday, August 21, 2018 Sheet 14 of 54

Page15: GPU PWR and GND

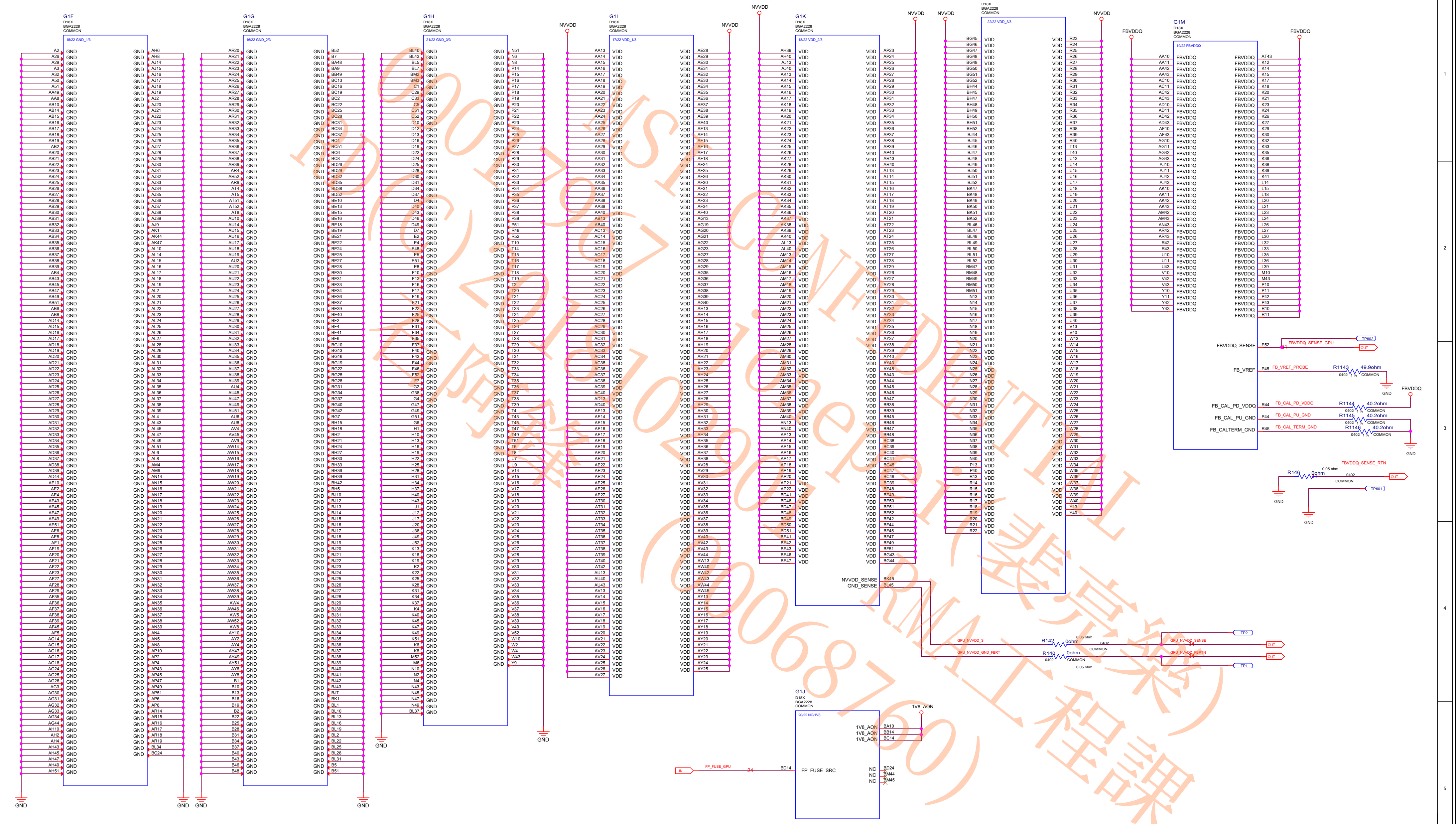
G1F D18X BGA2228 COMMON 15/22 GND_1/3
G1G D18X BGA2228 COMMON 16/22 GND_2/3
G1H D18X BGA2228 COMMON 21/22 GND_3/3
G1I D18X BGA2228 COMMON 17/22 VDD_1/3
G1K D18X BGA2228 COMMON 18/22 VDD_2/3
G1L D18X BGA2228 COMMON 22/22 VDD_3/3
G1M D18X BGA2228 COMMON 19/22 FBVDDQ
G1J D18X BGA2228 COMMON 20/22 NC/1V8
GND
VDD
NVVDD
FBVDDQ
1V8_AON
FBVDDQ_SENSE
FBVDDQ_SENSE_GPU
TP602
FB_VREF
FB_VREF_PROBE
R1143 49.9ohm 0402 1% COMMON
FB_CAL_PD_VDDQ
R1144 40.2ohm
FB_CAL_PU_GND
R1145 40.2ohm
FB_CALTERM_GND
FB_CAL_TERM_GND
R1146 40.2ohm
FBVDDQ_SENSE_RTN
R146 0ohm 0.05 ohm 0402 COMMON
TP601
NVVDD_SENSE
GND_SENSE
GPU_NVVDD_S
GPU_NVVDD_GND_FBRT
R142 0ohm 0.05 ohm 0402 COMMON
R149 0ohm 0402 COMMON 0.05 ohm
GPU_NVVDD_SENSE
GPU_NVVDD_FBRTN
TP2
TP1
OUT
IN
FP_FUSE_GPU
FP_FUSE_SRC
1V8_AON
NC

MICRO-STAR INT'L CO.,LTD

MS-V373

Size	Document Description	Rev
Custom	Page15:GPU PWR and GND	7.0

Date: Tuesday, August 21, 2018 Sheet 15 of 54

Page16: GPU Decoupling

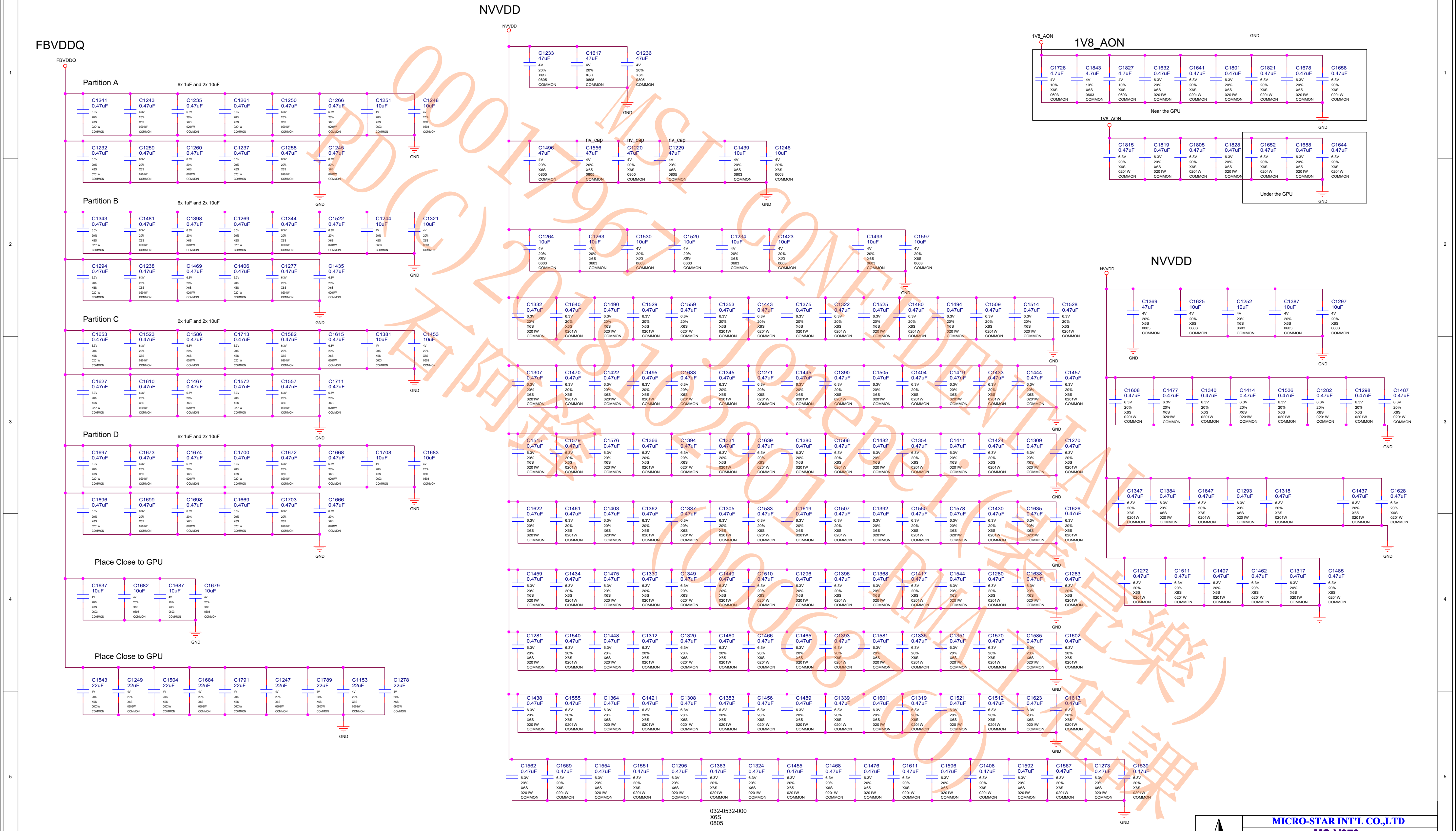
NVVDD
FBVDDQ
Partition A
6x 1uF and 2x 10uF
C1241 0.47uF
C1243 0.47uF
C1235 0.47uF
C1261 0.47uF
C1250 0.47uF
C1266 0.47uF
C1251 10uF
C1248 10uF
C1232 0.47uF
C1259 0.47uF
C1260 0.47uF
C1237 0.47uF
C1258 0.47uF
C1245 0.47uF
Partition B
6x 1uF and 2x 10uF
C1343 0.47uF
C1481 0.47uF
C1398 0.47uF
C1269 0.47uF
C1344 0.47uF
C1522 0.47uF
C1244 10uF
C1321 10uF
C1294 0.47uF
C1238 0.47uF
C1469 0.47uF
C1406 0.47uF
C1277 0.47uF
C1435 0.47uF
Partition C
6x 1uF and 2x 10uF
C1653 0.47uF
C1523 0.47uF
C1586 0.47uF
C1713 0.47uF
C1582 0.47uF
C1615 0.47uF
C1381 10uF
C1453 10uF
C1627 0.47uF
C1610 0.47uF
C1467 0.47uF
C1572 0.47uF
C1557 0.47uF
C1711 0.47uF
Partition D
6x 1uF and 2x 10uF
C1697 0.47uF
C1673 0.47uF
C1674 0.47uF
C1700 0.47uF
C1672 0.47uF
C1668 0.47uF
C1708 10uF
C1683 10uF
C1696 0.47uF
C1699 0.47uF
C1698 0.47uF
C1669 0.47uF
C1703 0.47uF
C1666 0.47uF
Place Close to GPU
C1637 10uF
C1682 10uF
C1687 10uF
C1679 10uF
Place Close to GPU
C1543 22uF
C1249 22uF
C1504 22uF
C1684 22uF
C1791 22uF
C1247 22uF
C1789 22uF
C1153 22uF
C1278 22uF
C1233 47uF
C1617 47uF
C1236 47uF
nv_cap
C1496 47uF
C1556 47uF
C1220 47uF
C1229 47uF
C1439 10uF
C1246 10uF
C1264 10uF
C1263 10uF
C1530 10uF
C1520 10uF
C1234 10uF
C1423 10uF
C1493 10uF
C1597 10uF
C1332 C1640 C1490 C1529 C1559 C1353 C1443 C1375 C1322 C1525 C1480 C1494 C1509 C1514 C1528 0.47uF
C1307 C1470 C1422 C1495 C1633 C1345 C1271 C1445 C1390 C1505 C1404 C1419 C1433 C1444 C1457 0.47uF
C1515 C1579 C1576 C1366 C1394 C1331 C1639 C1380 C1566 C1482 C1354 C1411 C1424 C1309 C1270 0.47uF
C1622 C1461 C1403 C1362 C1337 C1305 C1533 C1619 C1507 C1392 C1550 C1578 C1430 C1635 C1626 0.47uF
C1459 C1434 C1475 C1330 C1349 C1449 C1510 C1296 C1396 C1368 C1417 C1544 C1280 C1638 C1283 0.47uF
C1281 C1540 C1448 C1312 C1320 C1460 C1466 C1465 C1393 C1581 C1335 C1351 C1570 C1585 C1602 0.47uF
C1438 C1555 C1364 C1421 C1308 C1383 C1456 C1489 C1339 C1601 C1319 C1521 C1512 C1623 C1613 0.47uF
C1562 C1569 C1554 C1551 C1295 C1363 C1324 C1455 C1468 C1476 C1611 C1596 C1408 C1592 C1567 C1273 C1539 0.47uF
032-0532-000
X6S
0805
1V8_AON
C1726 4.7uF
C1843 4.7uF
C1827 4.7uF
C1632 C1641 C1801 C1821 C1678 C1658 0.47uF
Near the GPU
C1815 C1819 C1805 C1828 C1652 C1688 C1644 0.47uF
Under the GPU
C1369 47uF
C1625 10uF
C1252 10uF
C1387 10uF
C1297 10uF
C1608 C1477 C1340 C1414 C1536 C1282 C1298 C1487 0.47uF
C1347 C1384 C1647 C1293 C1318 C1437 C1628 0.47uF
C1272 C1511 C1497 C1462 C1317 C1485 0.47uF
GND

000179961 MSI CONFIDENTIAL
RD(C)20181029 Joey Lin (李冠樂)
(00062760) MA 林保謙 有限公司

MICRO-STAR INT'L CO.,LTD

MS-V373

Size Custom
Document Description: Page16:GPU Decoupling
Rev 7.0
Date: Tuesday, August 21, 2018
Sheet 16 of 54

Page17: GPU Decoupling

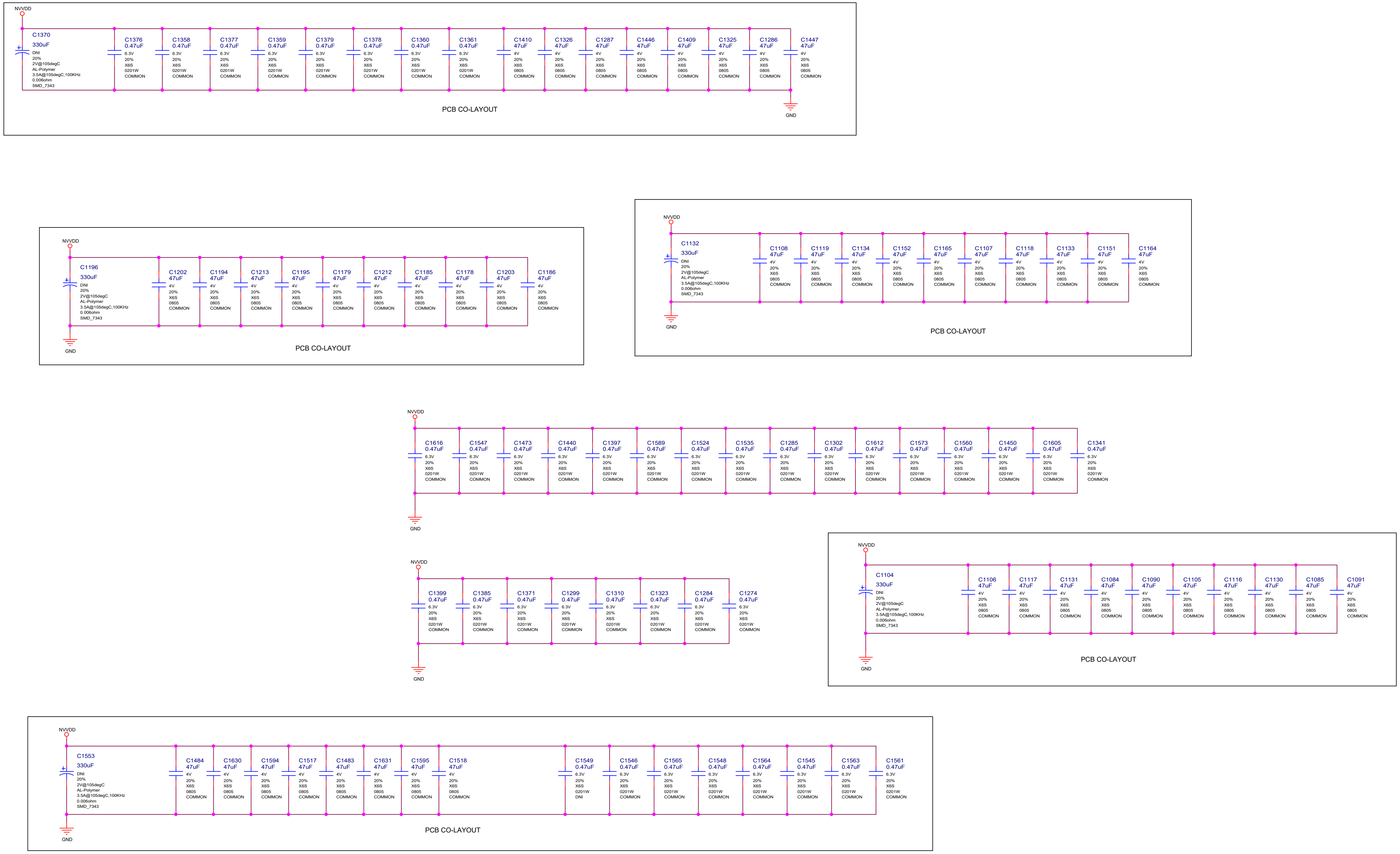
NVVDD
C1370 330uF DNI 20% 2V@105degC AL-Polymer 3.5A@105degC,100KHz 0.006ohm SMD_7343
C1376 0.47uF 6.3V 20% X6S 0201W COMMON
C1358 0.47uF 6.3V 20% X6S 0201W COMMON
C1377 0.47uF 6.3V 20% X6S 0201W COMMON
C1359 0.47uF 6.3V 20% X6S 0201W COMMON
C1379 0.47uF 6.3V 20% X6S 0201W COMMON
C1378 0.47uF 6.3V 20% X6S 0201W COMMON
C1360 0.47uF 6.3V 20% X6S 0201W COMMON
C1361 0.47uF 6.3V 20% X6S 0201W COMMON
C1410 47uF 4V 20% X6S 0805 COMMON
C1326 47uF 4V 20% X6S 0805 COMMON
C1287 47uF 4V 20% X6S 0805 COMMON
C1446 47uF 4V 20% X6S 0805 COMMON
C1409 47uF 4V 20% X6S 0805 COMMON
C1325 47uF 4V 20% X6S 0805 COMMON
C1286 47uF 4V 20% X6S 0805 COMMON
C1447 47uF 4V 20% X6S 0805 COMMON
GND
PCB CO-LAYOUT
NVVDD
C1196 330uF DNI 20% 2V@105degC AL-Polymer 3.5A@105degC,100KHz 0.006ohm SMD_7343
C1202 47uF 4V 20% X6S 0805 COMMON
C1194 47uF 4V 20% X6S 0805 COMMON
C1213 47uF 4V 20% X6S 0805 COMMON
C1195 47uF 4V 20% X6S 0805 COMMON
C1179 47uF 4V 20% X6S 0805 COMMON
C1212 47uF 4V 20% X6S 0805 COMMON
C1185 47uF 4V 20% X6S 0805 COMMON
C1178 47uF 4V 20% X6S 0805 COMMON
C1203 47uF 4V 20% X6S 0805 COMMON
C1186 47uF 4V 20% X6S 0805 COMMON
GND
PCB CO-LAYOUT
NVVDD
C1132 330uF DNI 20% 2V@105degC AL-Polymer 3.5A@105degC,100KHz 0.006ohm SMD_7343
C1108 47uF 4V 20% X6S 0805 COMMON
C1119 47uF 4V 20% X6S 0805 COMMON
C1134 47uF 4V 20% X6S 0805 COMMON
C1152 47uF 4V 20% X6S 0805 COMMON
C1165 47uF 4V 20% X6S 0805 COMMON
C1107 47uF 4V 20% X6S 0805 COMMON
C1118 47uF 4V 20% X6S 0805 COMMON
C1133 47uF 4V 20% X6S 0805 COMMON
C1151 47uF 4V 20% X6S 0805 COMMON
C1164 47uF 4V 20% X6S 0805 COMMON
GND
PCB CO-LAYOUT
NVVDD
C1616 0.47uF 6.3V 20% X6S 0201W COMMON
C1547 0.47uF 6.3V 20% X6S 0201W COMMON
C1473 0.47uF 6.3V 20% X6S 0201W COMMON
C1440 0.47uF 6.3V 20% X6S 0201W COMMON
C1397 0.47uF 6.3V 20% X6S 0201W COMMON
C1589 0.47uF 6.3V 20% X6S 0201W COMMON
C1524 0.47uF 6.3V 20% X6S 0201W COMMON
C1535 0.47uF 6.3V 20% X6S 0201W COMMON
C1285 0.47uF 6.3V 20% X6S 0201W COMMON
C1302 0.47uF 6.3V 20% X6S 0201W COMMON
C1612 0.47uF 6.3V 20% X6S 0201W COMMON
C1573 0.47uF 6.3V 20% X6S 0201W COMMON
C1560 0.47uF 6.3V 20% X6S 0201W COMMON
C1450 0.47uF 6.3V 20% X6S 0201W COMMON
C1605 0.47uF 6.3V 20% X6S 0201W COMMON
C1341 0.47uF 6.3V 20% X6S 0201W COMMON
GND
NVVDD
C1399 0.47uF 6.3V 20% X6S 0201W COMMON
C1385 0.47uF 6.3V 20% X6S 0201W COMMON
C1371 0.47uF 6.3V 20% X6S 0201W COMMON
C1299 0.47uF 6.3V 20% X6S 0201W COMMON
C1310 0.47uF 6.3V 20% X6S 0201W COMMON
C1323 0.47uF 6.3V 20% X6S 0201W COMMON
C1284 0.47uF 6.3V 20% X6S 0201W COMMON
C1274 0.47uF 6.3V 20% X6S 0201W COMMON
GND
NVVDD
C1104 330uF DNI 20% 2V@105degC AL-Polymer 3.5A@105degC,100KHz 0.006ohm SMD_7343
C1106 47uF 4V 20% X6S 0805 COMMON
C1117 47uF 4V 20% X6S 0805 COMMON
C1131 47uF 4V 20% X6S 0805 COMMON
C1084 47uF 4V 20% X6S 0805 COMMON
C1090 47uF 4V 20% X6S 0805 COMMON
C1105 47uF 4V 20% X6S 0805 COMMON
C1116 47uF 4V 20% X6S 0805 COMMON
C1130 47uF 4V 20% X6S 0805 COMMON
C1085 47uF 4V 20% X6S 0805 COMMON
C1091 47uF 4V 20% X6S 0805 COMMON
GND
PCB CO-LAYOUT
NVVDD
C1553 330uF DNI 20% 2V@105degC AL-Polymer 3.5A@105degC,100KHz 0.006ohm SMD_7343
C1484 47uF 4V 20% X6S 0805 COMMON
C1630 47uF 4V 20% X6S 0805 COMMON
C1594 47uF 4V 20% X6S 0805 COMMON
C1517 47uF 4V 20% X6S 0805 COMMON
C1483 47uF 4V 20% X6S 0805 COMMON
C1631 47uF 4V 20% X6S 0805 COMMON
C1595 47uF 4V 20% X6S 0805 COMMON
C1518 47uF 4V 20% X6S 0805 COMMON
C1549 0.47uF 6.3V 20% X6S 0201W DNI
C1546 0.47uF 6.3V 20% X6S 0201W COMMON
C1565 0.47uF 6.3V 20% X6S 0201W COMMON
C1548 0.47uF 6.3V 20% X6S 0201W COMMON
C1564 0.47uF 6.3V 20% X6S 0201W COMMON
C1545 0.47uF 6.3V 20% X6S 0201W COMMON
C1563 0.47uF 6.3V 20% X6S 0201W COMMON
C1561 0.47uF 6.3V 20% X6S 0201W COMMON
GND
PCB CO-LAYOUT

MICRO-STAR INT'L CO.,LTD

MS-V373

Size	Document Description	Rev
Custom	Page17:GPU DECOUPLING	7.0

Date: Tuesday, August 21, 2018 | Sheet 17 of 54

PAGE 18: IFPAB Tall-DP

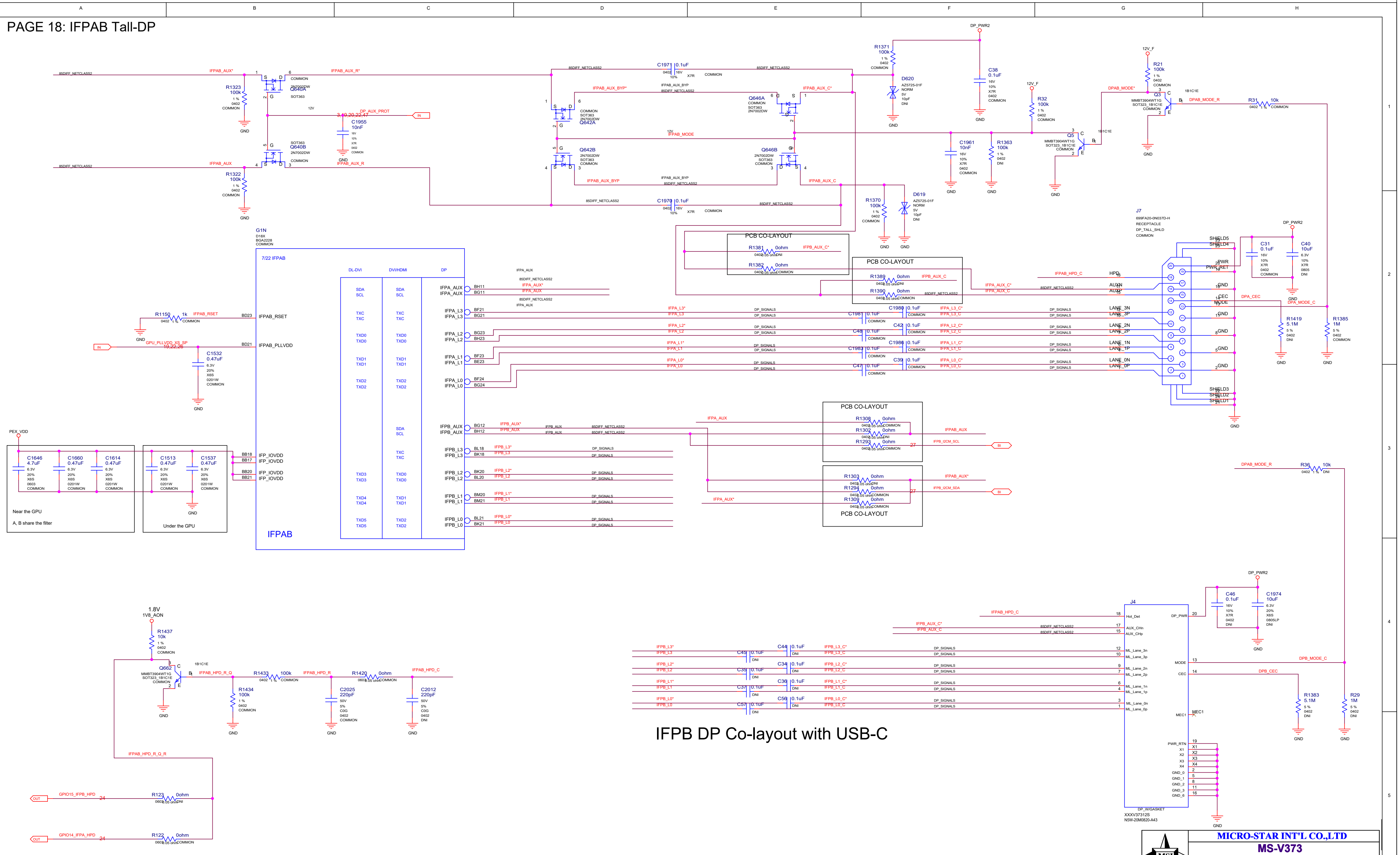

IFPAB_AUX*
IFPAB_AUX_R*
85DIFF_NETCLASS2
R1323 100k 1% 0402 COMMON
Q640A 2N7002DW SOT363
Q640B 2N7002DW SOT363
DP_AUX_PROT
3,19,20,22,47
C1955 10nF 16V 10% X7R 0402 COMMON
IFPAB_AUX
IFPAB_AUX_R
R1322 100k 1% 0402 COMMON
GND
12V
Q642A 2N7002DW SOT363
Q642B 2N7002DW SOT363
Q646A 2N7002DW SOT363
Q646B 2N7002DW SOT363
IFPAB_AUX_BYP*
IFPAB_AUX_BYP
IFPAB_AUX_C*
IFPAB_AUX_C
IFPAB_MODE
C1971 0.1uF 0402 16V 10% X7R COMMON
C1970 0.1uF 0402 16V 10% X7R COMMON
DP_PWR2
R1371 100k 1% 0402 COMMON
D620 AZ5725-01F NORM 5V 10pF DNI
C38 0.1uF 16V 10% X7R 0402 COMMON
12V_F
R32 100k 1% 0402 COMMON
C1961 10nF 16V 10% X7R 0402 COMMON
R1363 100k 1% 0402 DNI
Q5 MMBT3904WT1G SOT323_1B1C1E COMMON
DPAB_MODE*
R21 100k 1% 0402 COMMON
Q3 MMBT3904WT1G SOT323_1B1C1E COMMON
DPAB_MODE_R
R31 10k 0402 1% COMMON
R1370 100k 1% 0402 COMMON
D619 AZ5725-01F NORM 5V 10pF DNI
J7 699FA20-0N037D-H RECEPTACLE DP_TALL_SHLD COMMON
C31 0.1uF 16V 10% X7R 0402 COMMON
C40 10uF 6.3V 10% X7R 0805 DNI
PCB CO-LAYOUT
R1381 0ohm 0402 0.05 ohm DNI
R1382 0ohm 0402 0.05 ohm COMMON
R1389 0ohm 0402 0.05 ohm DNI
R1390 0ohm 0402 0.05 ohm COMMON
G1N D18X BGA2228 COMMON
7/22 IFPAB
DL-DVI
DVI/HDMI
DP
IFPA_AUX
IFPAB_RSET
IFPAB_PLLVDD
IFPA_L3
IFPA_L2
IFPA_L1
IFPA_L0
IFPB_AUX
IFPB_L3
IFPB_L2
IFPB_L1
IFPB_L0
IFP_IOVDD
IFPAB
R1150 1k 0402 1% COMMON
GPU_PLLVDD_XS_SP
19,22,26
C1532 0.47uF 6.3V 20% X6S 0201W COMMON
PEX_VDD
C1646 4.7uF 6.3V 20% X6S 0603 COMMON
C1660 0.47uF 6.3V 20% X6S 0201W COMMON
C1614 0.47uF 6.3V 20% X6S 0201W COMMON
C1513 0.47uF 6.3V 20% X6S 0201W COMMON
C1537 0.47uF 6.3V 20% X6S 0201W COMMON
Near the GPU
A, B share the filter
Under the GPU
C1981 0.1uF COMMON
C1980 0.1uF COMMON
C48 0.1uF COMMON
C42 0.1uF COMMON
C1983 0.1uF COMMON
C1986 0.1uF COMMON
C47 0.1uF COMMON
C39 0.1uF COMMON
DP_SIGNALS
IFPAB_HPD_C
HPD
AUXN
AUXP
LANE_3N
LANE_3P
LANE_2N
LANE_2P
LANE_1N
LANE_1P
LANE_0N
LANE_0P
PWR
PWR_RET
CEC
MODE
SHIELD1
SHIELD2
SHIELD3
SHIELD4
SHIELD5
DPA_CEC
DPA_MODE_C
R1419 5.1M 5% 0402 DNI
R1385 1M 5% 0402 COMMON
R1308 0ohm 0402 0.05 ohm COMMON
R1302 0ohm 0402 0.05 ohm DNI
R1293 0ohm 0402 0.05 ohm COMMON
IFPB_I2CM_SCL
R1303 0ohm 0402 0.05 ohm DNI
R1294 0ohm 0402 0.05 ohm COMMON
R1309 0ohm 0402 0.05 ohm COMMON
IFPB_I2CM_SDA
27
BI
DPAB_MODE_R
R36 10k 0402 1% DNI
1.8V
1V8_AON
R1437 10k 1% 0402 COMMON
Q662 MMBT3904WT1G SOT323_1B1C1E COMMON
IFPAB_HPD_R_Q
R1433 100k 0402 1% COMMON
IFPAB_HPD_R
R1420 0ohm 0603 0.05 ohm COMMON
IFPAB_HPD_C
R1434 100k 1% 0402 COMMON
C2025 220pF 50V 5% C0G 0402 COMMON
C2012 220pF 50V 5% C0G 0402 DNI
IFPAB_HPD_R_Q_R
GPIO15_IFPB_HPD
24
R123 0ohm 0603 0.05 ohm DNI
GPIO14_IFPA_HPD
R122 0ohm 0603 0.05 ohm COMMON
OUT
IFPB_HPD_C
IFPB_AUX_C*
IFPB_AUX_C
C45 0.1uF DNI
C44 0.1uF DNI
C35 0.1uF DNI
C34 0.1uF DNI
C37 0.1uF DNI
C36 0.1uF DNI
C57 0.1uF DNI
C56 0.1uF DNI
J4
Hot_Det
AUX_CHn
AUX_CHp
ML_Lane_3n
ML_Lane_3p
ML_Lane_2n
ML_Lane_2p
ML_Lane_1n
ML_Lane_1p
ML_Lane_0n
ML_Lane_0p
DP_PWR
MODE
CEC
MEC1
PWR_RTN
DP_W/GASKET
XXXV37312S
N5W-20M0820-A43
C46 0.1uF 16V 10% X7R 0402 DNI
C1974 10uF 6.3V 20% X6S 0805LP DNI
DPB_MODE_C
DPB_CEC
R1383 5.1M 5% 0402 DNI
R29 1M 5% 0402 DNI
IFPB DP Co-layout with USB-C

MICRO-STAR INT'L CO.,LTD

MS-V373

Size	Document Description	Rev
Custom	Page18:IFPAB TALL-DP	7.0

Date: Tuesday, August 21, 2018 Sheet 18 of 54

PAGE 19: IFPE DP

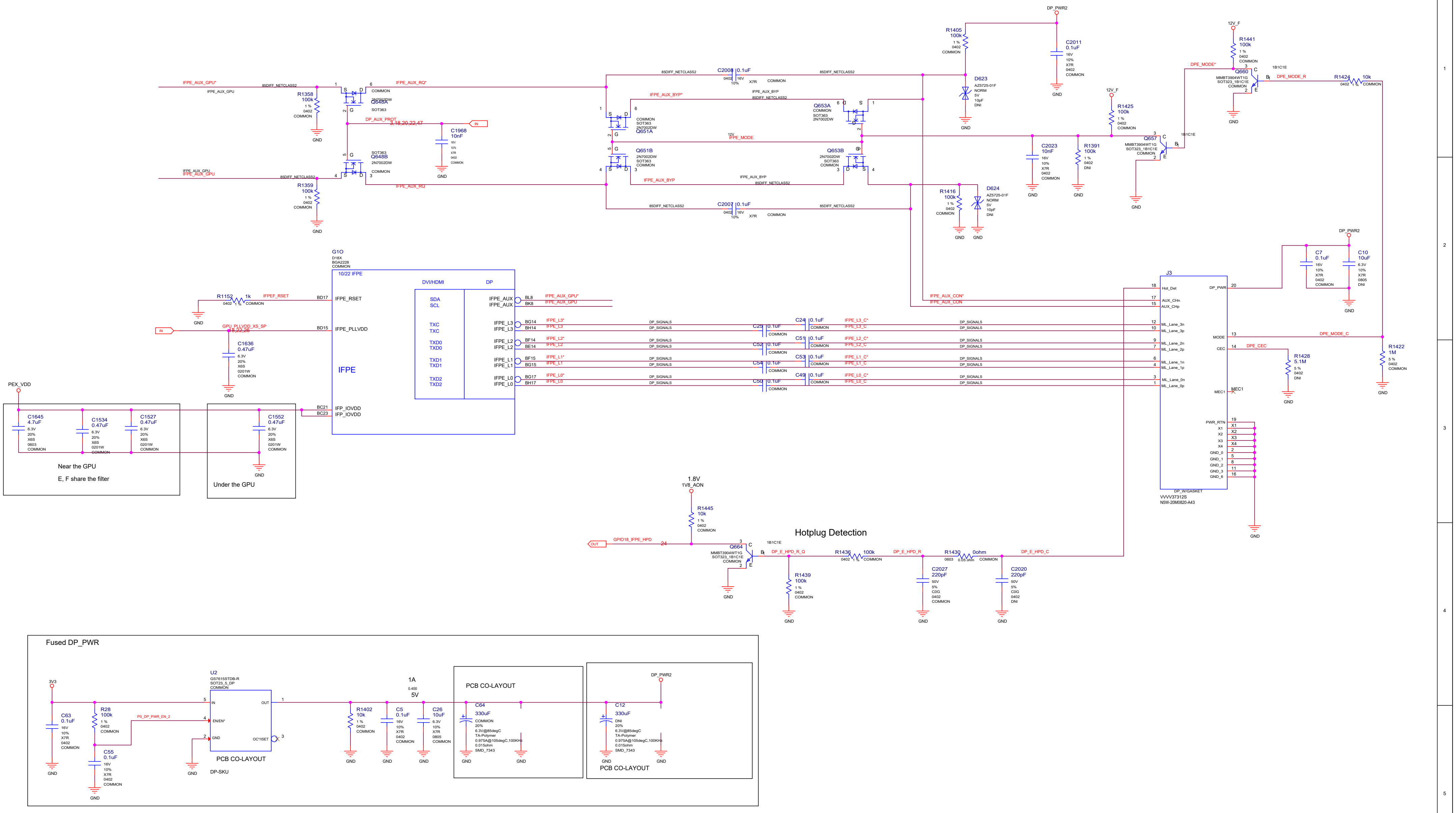

IFPE_AUX_GPU*
IFPE_AUX_GPU
85DIFF_NETCLASS2
R1358
100k
R1359
100k
Q648A
Q648B
2N7002DW
SOT363
COMMON
IFPE_AUX_RQ*
IFPE_AUX_RQ
DP_AUX_PROT
3,18,20,22,47
IN
C1968
10nF
C2008
0.1uF
C2007
0.1uF
IFPE_AUX_BYP*
IFPE_AUX_BYP
Q651A
Q651B
Q653A
Q653B
IFPE_MODE
12V
DP_PWR2
R1405
100k
C2011
0.1uF
D623
D624
AZ5725-01F
R1416
100k
C2023
10nF
R1391
100k
12V_F
R1425
100k
Q657
MMBT3904WT1G
SOT323_1B1C1E
R1441
100k
Q660
DPE_MODE*
DPE_MODE_R
R1424
10k
GND
G1O
D18X
BGA2228
10/22 IFPE
DVI/HDMI
DP
IFPE
IFPE_RSET
IFPE_PLLVDD
IFP_IOVDD
SDA
SCL
TXC
TXD0
TXD1
TXD2
IFPE_AUX
IFPE_L3
IFPE_L2
IFPE_L1
IFPE_L0
R1152
1k
IFPEF_RSET
GPU_PLLVDD_XS_SP
18,22,26
C1636
0.47uF
PEX_VDD
C1645
4.7uF
C1534
0.47uF
C1527
0.47uF
C1552
0.47uF
Near the GPU
E, F share the filter
Under the GPU
DP_SIGNALS
C25
C24
C52
C51
C54
C53
C50
C49
IFPE_AUX_CON*
IFPE_AUX_CON
IFPE_L3_C*
IFPE_L3_C
IFPE_L2_C*
IFPE_L2_C
IFPE_L1_C*
IFPE_L1_C
IFPE_L0_C*
IFPE_L0_C
J3
Hot_Det
AUX_CHn
AUX_CHp
ML_Lane_3n
ML_Lane_3p
ML_Lane_2n
ML_Lane_2p
ML_Lane_1n
ML_Lane_1p
ML_Lane_0n
ML_Lane_0p
DP_PWR
MODE
CEC
MEC1
PWR_RTN
DP_W/GASKET
VVVV37312S
N5W-20M0820-A43
C7
0.1uF
C10
10uF
DPE_MODE_C
DPE_CEC
R1428
5.1M
R1422
1M
1.8V
1V8_AON
R1445
10k
Hotplug Detection
GPIO18_IFPE_HPD
OUT
Q664
DP_E_HPD_R_Q
R1436
100k
DP_E_HPD_R
R1430
0ohm
DP_E_HPD_C
R1439
100k
C2027
220pF
C2020
220pF
Fused DP_PWR
3V3
U2
GS7615SSTDB-R
SOT23_5_DP
EN/EN*
OC*/ISET
PS_DP_PWR_EN_2
C63
0.1uF
R28
100k
C55
0.1uF
PCB CO-LAYOUT
DP-SKU
1A
5V
R1402
10k
C5
0.1uF
C26
10uF
C64
330uF
C12
330uF
TA-Polymer

MICRO-STAR INT'L CO.,LTD

MS-V373

Size	Document Description	Rev
Custom	Page19:IFPE DP	7.0

Date: Tuesday, August 21, 2018 Sheet 19 of 54

PAGE 20: IFPF USBC

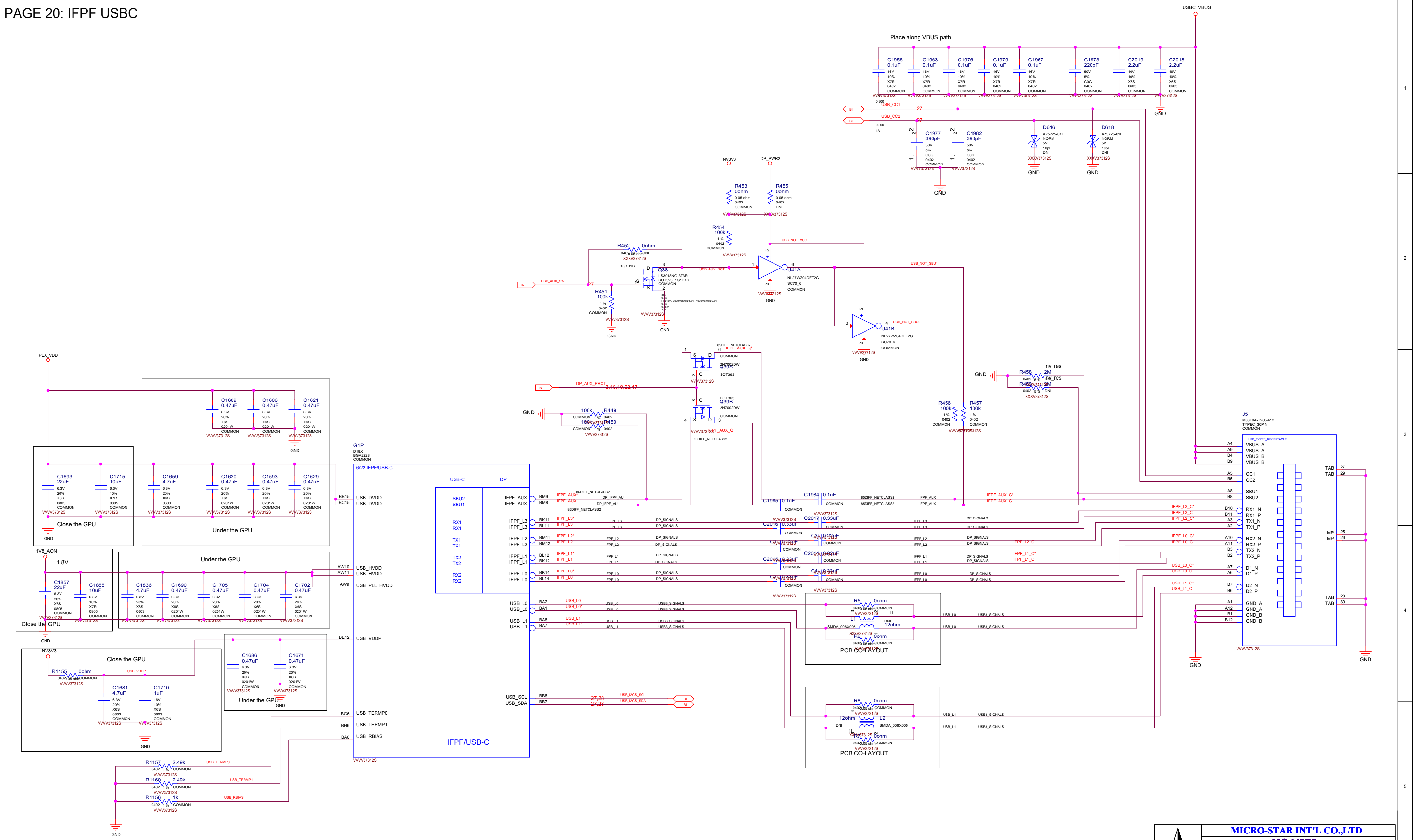
USBC_VBUS
Place along VBUS path
C1956 0.1uF
C1963 0.1uF
C1976 0.1uF
C1979 0.1uF
C1967 0.1uF
C1973 220pF
C2019 2.2uF
C2018 2.2uF
USB_CC1
USB_CC2
C1977 390pF
C1982 390pF
D616 AZ5725-01F
D618 AZ5725-01F
NV3V3
DP_PWR2
R453 0ohm
R455 0ohm
R454 100k
R452 0ohm
USB_NOT_VCC
USB_AUX_SW
USB_AUX_NOT_IN
Q38 LS3018NG-3T3R SOT323_1G1D1S
R451 100k
U41A NL27WZ04DFT2G SC70_6
USB_NOT_SBU1
U41B NL27WZ04DFT2G SC70_6
USB_NOT_SBU2
Q39A 2N7002DW SOT363
Q39B 2N7002DW SOT363
IFPF_AUX_Q*
IFPF_AUX_Q
DP_AUX_PROT
3,18,19,22,47
R449 100k
R450 100k
R458 2M
R460 2M
nv_res
R456 100k
R457 100k
PEX_VDD
C1609 0.47uF
C1606 0.47uF
C1621 0.47uF
C1693 22uF
C1715 10uF
C1659 4.7uF
C1620 0.47uF
C1593 0.47uF
C1629 0.47uF
Close the GPU
Under the GPU
1V8_AON
1.8V
C1857 22uF
C1855 10uF
C1836 4.7uF
C1690 0.47uF
C1705 0.47uF
C1704 0.47uF
C1702 0.47uF
Close the GPU
Under the GPU
NV3V3
R1155 0ohm
USB_VDDP
Close the GPU
C1681 4.7uF
C1710 1uF
C1686 0.47uF
C1671 0.47uF
Under the GPU
G1P D18X BGA2228
6/22 IFPF/USB-C
USB-C
DP
SBU2
SBU1
RX1
RX1
TX1
TX1
TX2
TX2
RX2
RX2
USB_DVDD
USB_DVDD
USB_HVDD
USB_HVDD
USB_PLL_HVDD
USB_VDDP
USB_TERMP0
USB_TERMP1
USB_RBIAS
IFPF_AUX
IFPF_AUX
IFPF_L3
IFPF_L3
IFPF_L2
IFPF_L2
IFPF_L1
IFPF_L1
IFPF_L0
IFPF_L0
USB_L0
USB_L0
USB_L1
USB_L1
USB_SCL
USB_SDA
USB_I2CS_SCL
USB_I2CS_SDA
IFPF/USB-C
R1157 2.49k
R1160 2.49k
R1156 1k
USB_TERMP0
USB_TERMP1
USB_RBIAS
C1984 0.1uF
C1983 0.1uF
C2016 0.33uF
C2017 0.33uF
C2014 0.22uF
C2015 0.22uF
R5 0ohm
L1 12ohm
R6 0ohm
PCB CO-LAYOUT
R8 0ohm
L2 12ohm
R9 0ohm
PCB CO-LAYOUT
SMDA_006X005
J5 MJ8E0A-T280-412 TYPEC_30PIN
USB_TYPEC_RECEPTACLE
VBUS_A
VBUS_A
VBUS_B
VBUS_B
CC1
CC2
SBU1
SBU2
RX1_N
RX1_P
TX1_N
TX1_P
RX2_N
RX2_P
TX2_N
TX2_P
D1_N
D1_P
D2_N
D2_P
GND_A
GND_A
GND_B
GND_B
TAB
MP
GND

MICRO-STAR INT'L CO.,LTD

MS-V373

Size	Document Description	Rev
Custom	Page20:IFPF USBC	7.0

Date: Tuesday, August 21, 2018 Sheet 20 of 54

PAGE 21:IFPC HDMI 2.0/DP

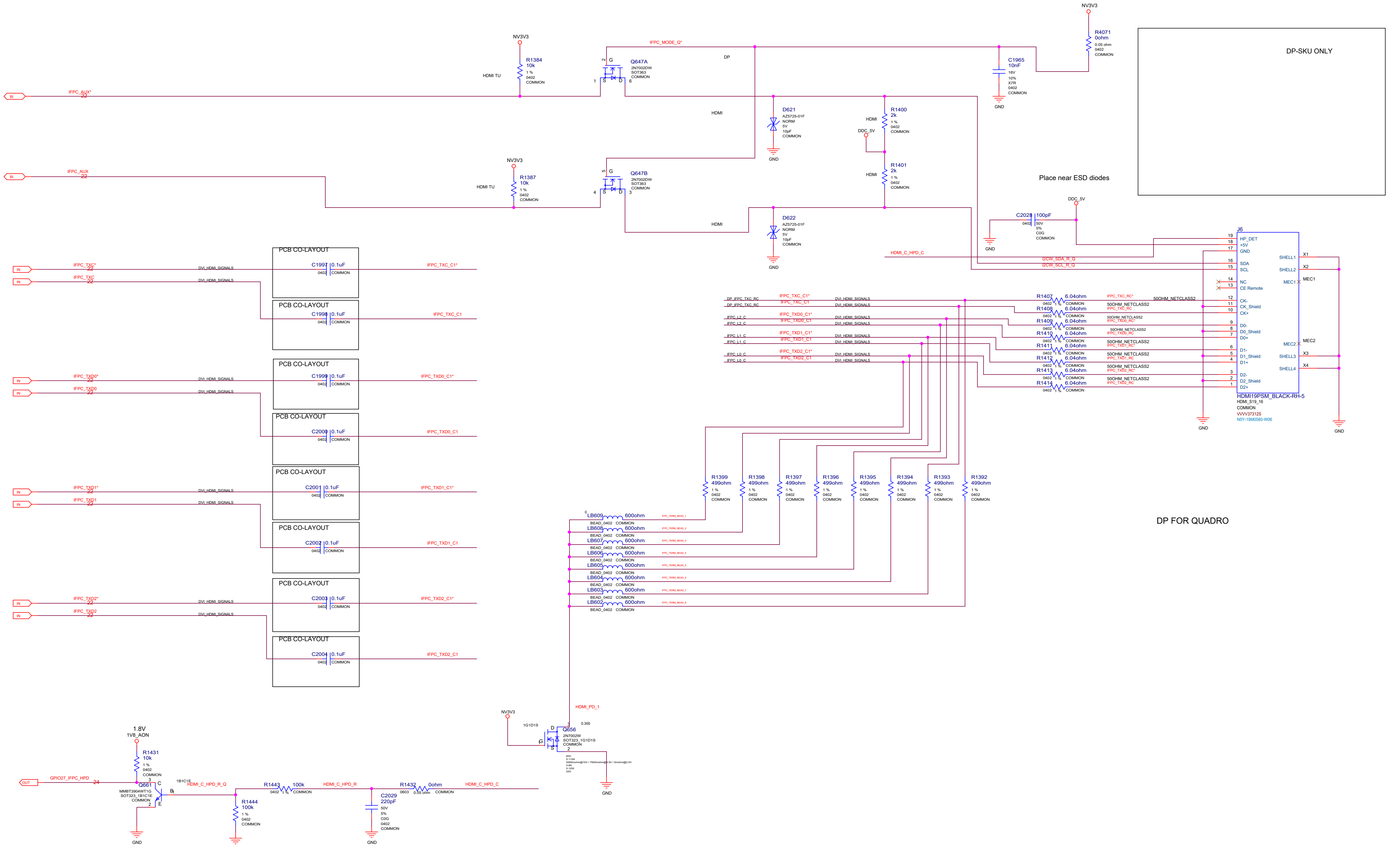
NV3V3
R1384
10k
1 %
0402
COMMON
HDMI TU
IFPC_MODE_Q*
Q647A
2N7002DW
SOT363
COMMON
DP
HDMI TU
NV3V3
R4071
0ohm
0.05 ohm
0402
COMMON
C1965
10nF
16V
10%
X7R
0402
COMMON
GND
DP-SKU ONLY
BI
IFPC_AUX*
22
D621
AZ5725-01F
NORM
5V
10pF
COMMON
HDMI
R1400
2k
1 %
0402
COMMON
DDC_5V
R1401
2k
HDMI
NV3V3
R1387
10k
Q647B
2N7002DW
SOT363
COMMON
BI
IFPC_AUX
22
Place near ESD diodes
DDC_5V
C2028
100pF
50V
5%
C0G
0402
COMMON
D622
AZ5725-01F
HDMI_C_HPD_C
I2CW_SDA_R_Q
I2CW_SCL_R_Q
J6
HP_DET
+5V
GND
SDA
SCL
NC
CE Remote
CK-
CK_Shield
CK+
D0-
D0_Shield
D0+
D1-
D1_Shield
D1+
D2-
D2_Shield
D2+
SHELL1
SHELL2
SHELL3
SHELL4
MEC1
MEC2
X1
X2
X3
X4
HDMI19PSM_BLACK-RH-5
HDMI_S19_16
COMMON
VVV37312S
N5Y-19M0580-W06
GND
PCB CO-LAYOUT
IN
IFPC_TXC*
IFPC_TXC
DVI_HDMI_SIGNALS
C1997 0.1uF 0402 COMMON
IFPC_TXC_C1*
C1998 0.1uF 0402 COMMON
IFPC_TXC_C1
IFPC_TXD0*
IFPC_TXD0
C1999 0.1uF 0402 COMMON
IFPC_TXD0_C1*
C2000 0.1uF 0402 COMMON
IFPC_TXD0_C1
IFPC_TXD1*
IFPC_TXD1
C2001 0.1uF 0402 COMMON
IFPC_TXD1_C1*
C2002 0.1uF 0402 COMMON
IFPC_TXD1_C1
IFPC_TXD2*
IFPC_TXD2
C2003 0.1uF 0402 COMMON
IFPC_TXD2_C1*
C2004 0.1uF 0402 COMMON
IFPC_TXD2_C1
DP_IFPC_TXC_RC
IFPC_L2_C
IFPC_L1_C
IFPC_L0_C
R1407 6.04ohm
R1408 6.04ohm
R1409 6.04ohm
R1410 6.04ohm
R1411 6.04ohm
R1412 6.04ohm
R1413 6.04ohm
R1414 6.04ohm
50OHM_NETCLASS2
IFPC_TXC_RC*
IFPC_TXC_RC
IFPC_TXD0_RC*
IFPC_TXD0_RC
IFPC_TXD1_RC*
IFPC_TXD1_RC
IFPC_TXD2_RC*
IFPC_TXD2_RC
R1399 499ohm
R1398 499ohm
R1397 499ohm
R1396 499ohm
R1395 499ohm
R1394 499ohm
R1393 499ohm
R1392 499ohm
DP FOR QUADRO
LB609 600ohm
LB608 600ohm
LB607 600ohm
LB606 600ohm
LB605 600ohm
LB604 600ohm
LB603 600ohm
LB602 600ohm
BEAD_0402 COMMON
HDMI_PD_1
NV3V3
1G1D1S
Q656
2N7002W
SOT323_1G1D1S
COMMON
GND
1.8V
1V8_AON
R1431
10k
1 %
0402
COMMON
OUT
GPIO27_IFPC_HPD
24
Q661
MMBT3904WT1G
SOT323_1B1C1E
COMMON
1B1C1E
HDMI_C_HPD_R_Q
R1444
100k
GND
R1443 100k 0402 1 % COMMON
HDMI_C_HPD_R
C2029
220pF
50V
5%
C0G
0402
COMMON
R1432 0ohm 0603 0.05 ohm COMMON
HDMI_C_HPD_C
GND

MICRO-STAR INT'L CO.,LTD

MS-V373

Size	Document Description	Rev
Custom	Page21:IFPC HDMI 2.0_DP	7.0

Date: Tuesday, August 21, 2018 Sheet 21 of 54

PAGE 22: IFPD DP

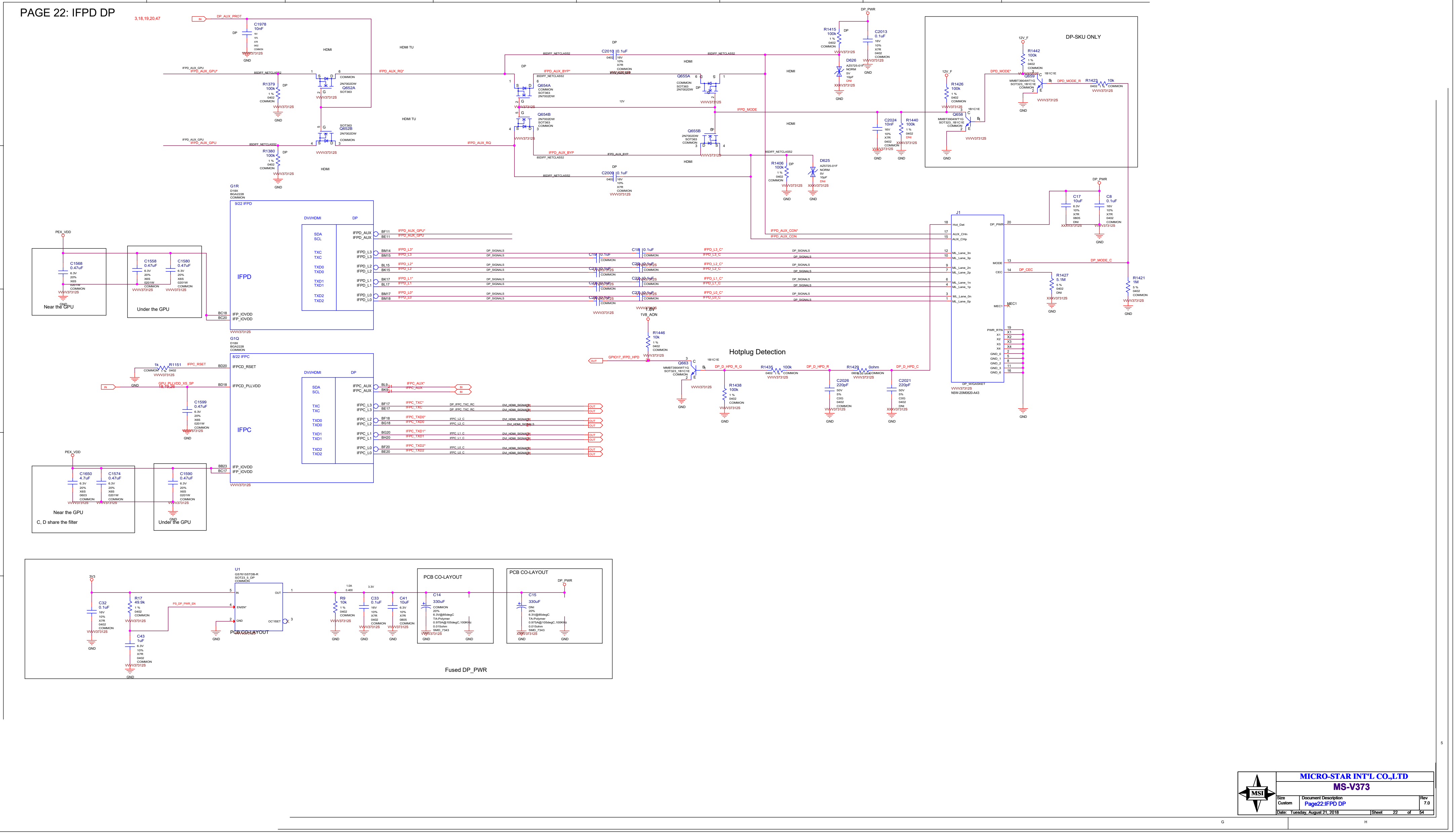

A
B
C
D
E
F
G
H
1
2
3
4
5
3,18,19,20,47
DP_AUX_PROT
C1978
10nF
HDMI
HDMI TU
DP
DP_PWR
R1415
100k
C2013
0.1uF
D626
DP-SKU ONLY
12V_F
R1442
100k
Q659
R1426
100k
Q658
MMBT3904WT1G
R1423
10k
DPD_MODE*
DPD_MODE_R
IFPD_AUX_GPU
IFPD_AUX_GPU*
IFPD_AUX_RQ*
IFPD_AUX_RQ
IFPD_AUX_BYP
IFPD_AUX_BYP*
IFPD_MODE
Q652A
Q652B
2N7002DW
Q654A
Q654B
Q655A
Q655B
R1379
100k
R1380
100k
C2010
0.1uF
C2009
0.1uF
C2024
10nF
R1440
100k
R1406
100k
D625
AZ5725-01F
85DIFF_NETCLASS2
G1R
9/22 IFPD
DVI/HDMI
SDA
SCL
TXC
TXD0
TXD1
TXD2
IFPD
IFPD_AUX
IFPD_L3
IFPD_L2
IFPD_L1
IFPD_L0
IFP_IOVDD
IFPD_L3*
IFPD_L2*
IFPD_L1*
IFPD_L0*
DP_SIGNALS
C18
C19
C20
C21
C22
C23
C24
C25
IFPD_L3_C*
IFPD_L3_C
IFPD_L2_C*
IFPD_L2_C
IFPD_L1_C*
IFPD_L1_C
IFPD_L0_C*
IFPD_L0_C
IFPD_AUX_CON*
IFPD_AUX_CON
J1
Hot_Det
DP_PWR
AUX_CHn
AUX_CHp
ML_Lane_3n
ML_Lane_3p
ML_Lane_2n
ML_Lane_2p
ML_Lane_1n
ML_Lane_1p
ML_Lane_0n
ML_Lane_0p
MODE
CEC
MEC1
PWR_RTN
GND_0
DP_W/GASKET
NSW-20M0820-A43
C17
10uF
C8
0.1uF
DP_MODE_C
DP_CEC
R1427
5.1M
R1421
1M
PEX_VDD
C1568
0.47uF
C1558
0.47uF
C1580
0.47uF
Near the GPU
Under the GPU
1V8_ADN
R1446
10k
Hotplug Detection
GPIO17_IFPD_HPD
Q663
DP_D_HPD_R_Q
R1435
100k
DP_D_HPD_R
R1429
0ohm
DP_D_HPD_C
R1438
100k
C2026
220pF
C2021
220pF
G1Q
8/22 IFPC
IFPCD_RSET
IFPCD_PLLVDD
R1151
1k
IFPC_RSET
GPU_PLLVDD_XS_SP
C1599
0.47uF
IFPC
IFPC_AUX
IFPC_L3
IFPC_L2
IFPC_L1
IFPC_L0
IFPC_AUX*
IFPC_TXC*
IFPC_TXC
IFPC_TXD0*
IFPC_TXD0
IFPC_TXD1*
IFPC_TXD1
IFPC_TXD2*
IFPC_TXD2
DVI_HDMI_SIGNALS
C1650
4.7uF
C1574
0.47uF
C1590
0.47uF
Near the GPU
C, D share the filter
Under the GPU
3V3
U1
G5761SSTDB-R
IN
OUT
EN/EN*
GND
DC1SET
C32
0.1uF
R17
49.9k
C43
1uF
PS_DP_PWR_EN
R9
10k
C33
0.1uF
C41
10uF
PCB CO-LAYOUT
C14
330uF
C15
330uF
Fused DP_PWR
GND
VVVV37312S

MICRO-STAR INT'L CO.,LTD

MS-V373

Size	Document Description	Rev
Custom	Page22:IFPD DP	7.0

Date: Tuesday, August 21, 2018 Sheet 22 of 54

PAGE 23: NVHS Interface

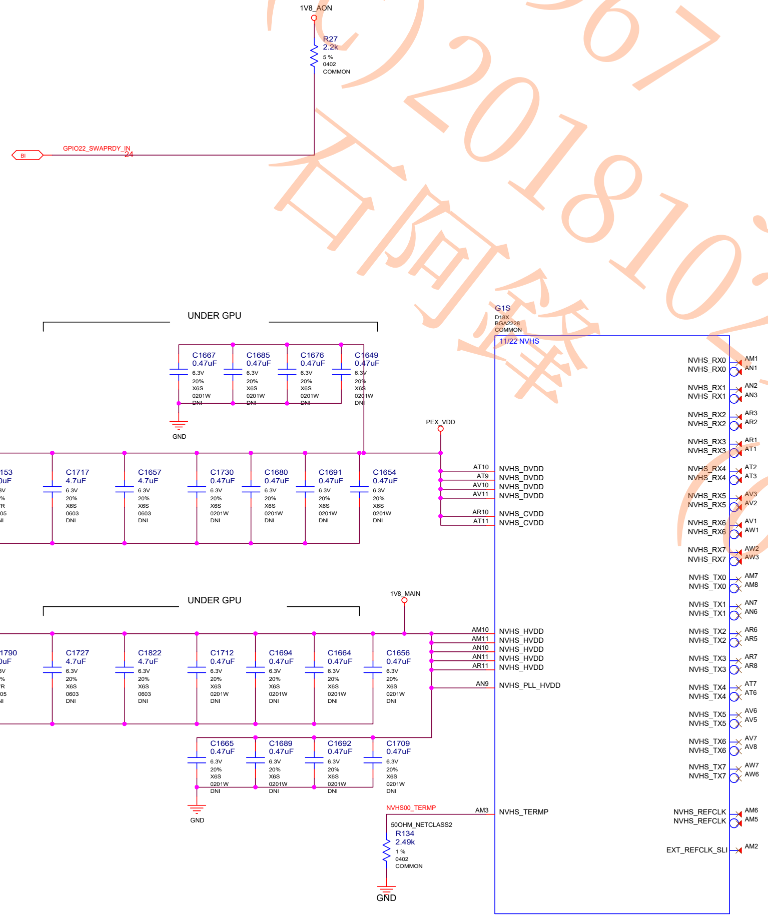
1V8_AON
R27
2.2k
5 %
0402
COMMON
BI
GPIO22_SWAPRDY_IN
24
UNDER GPU
C1667 0.47uF 6.3V 20% X6S 0201W DNI
C1685 0.47uF 6.3V 20% X6S 0201W DNI
C1676 0.47uF 6.3V 20% X6S 0201W DNI
C1649 0.47uF 6.3V 20% X6S 0201W DNI
GND
NEAR GPU
PEX_VDD
C154 22uF 6.3V 20% X6S 0805 DNI
C148 22uF 6.3V 20% X6S 0805 DNI
C160 10uF 6.3V 10% X7R 0805 DNI
C153 10uF 6.3V 10% X7R 0805 DNI
C1717 4.7uF 6.3V 20% X6S 0603 DNI
C1657 4.7uF 6.3V 20% X6S 0603 DNI
C1730 0.47uF 6.3V 20% X6S 0201W DNI
C1680 0.47uF 6.3V 20% X6S 0201W DNI
C1691 0.47uF 6.3V 20% X6S 0201W DNI
C1654 0.47uF 6.3V 20% X6S 0201W DNI
GND
G1S
D18X
BGA2228
COMMON
11/22 NVHS
AT10 NVHS_DVDD
AT9 NVHS_DVDD
AV10 NVHS_DVDD
AV11 NVHS_DVDD
AR10 NVHS_CVDD
AT11 NVHS_CVDD
NEAR GPU
UNDER GPU
1V8_MAIN
C1808 22uF 6.3V 20% X6S 0805 DNI
C1788 22uF 6.3V 20% X6S 0805 DNI
C1811 10uF 6.3V 10% X7R 0805 DNI
C1790 10uF 6.3V 10% X7R 0805 DNI
C1727 4.7uF 6.3V 20% X6S 0603 DNI
C1822 4.7uF 6.3V 20% X6S 0603 DNI
C1712 0.47uF 6.3V 20% X6S 0201W DNI
C1694 0.47uF 6.3V 20% X6S 0201W DNI
C1664 0.47uF 6.3V 20% X6S 0201W DNI
C1656 0.47uF 6.3V 20% X6S 0201W DNI
GND
AM10 NVHS_HVDD
AM11 NVHS_HVDD
AN10 NVHS_HVDD
AN11 NVHS_HVDD
AR11 NVHS_HVDD
AN9 NVHS_PLL_HVDD
C1665 0.47uF 6.3V 20% X6S 0201W DNI
C1689 0.47uF 6.3V 20% X6S 0201W DNI
C1692 0.47uF 6.3V 20% X6S 0201W DNI
C1709 0.47uF 6.3V 20% X6S 0201W DNI
GND
NVHS00_TERMP
AM3 NVHS_TERMP
50OHM_NETCLASS2
R134
2.49k
1 %
0402
COMMON
GND
NVHS_RX0 AM1
NVHS_RX0 AN1
NVHS_RX1 AN2
NVHS_RX1 AN3
NVHS_RX2 AR3
NVHS_RX2 AR2
NVHS_RX3 AR1
NVHS_RX3 AT1
NVHS_RX4 AT2
NVHS_RX4 AT3
NVHS_RX5 AV3
NVHS_RX5 AV2
NVHS_RX6 AV1
NVHS_RX6 AW1
NVHS_RX7 AW2
NVHS_RX7 AW3
NVHS_TX0 AM7
NVHS_TX0 AM8
NVHS_TX1 AN7
NVHS_TX1 AN6
NVHS_TX2 AR6
NVHS_TX2 AR5
NVHS_TX3 AR7
NVHS_TX3 AR8
NVHS_TX4 AT7
NVHS_TX4 AT6
NVHS_TX5 AV6
NVHS_TX5 AV5
NVHS_TX6 AV7
NVHS_TX6 AV8
NVHS_TX7 AW7
NVHS_TX7 AW6
NVHS_REFCLK AM6
NVHS_REFCLK AM5
EXT_REFCLK_SLI AM2

MSI CONFIDENTIAL
00017967 jonepei(裴亮樂)
RD(C)2018102901 RMA工程課
石向鋒(00068760)

MICRO-STAR INT'L CO.,LTD

MS-V373

Size	Document Description	Rev
Custom	Page23:NVHS INTERFACE	7.0
Date: Tuesday, August 21, 2018	Sheet 23 of 54	

PAGE 24: MISC: Fan, Thermal, JTAG, GPIO, STEREO

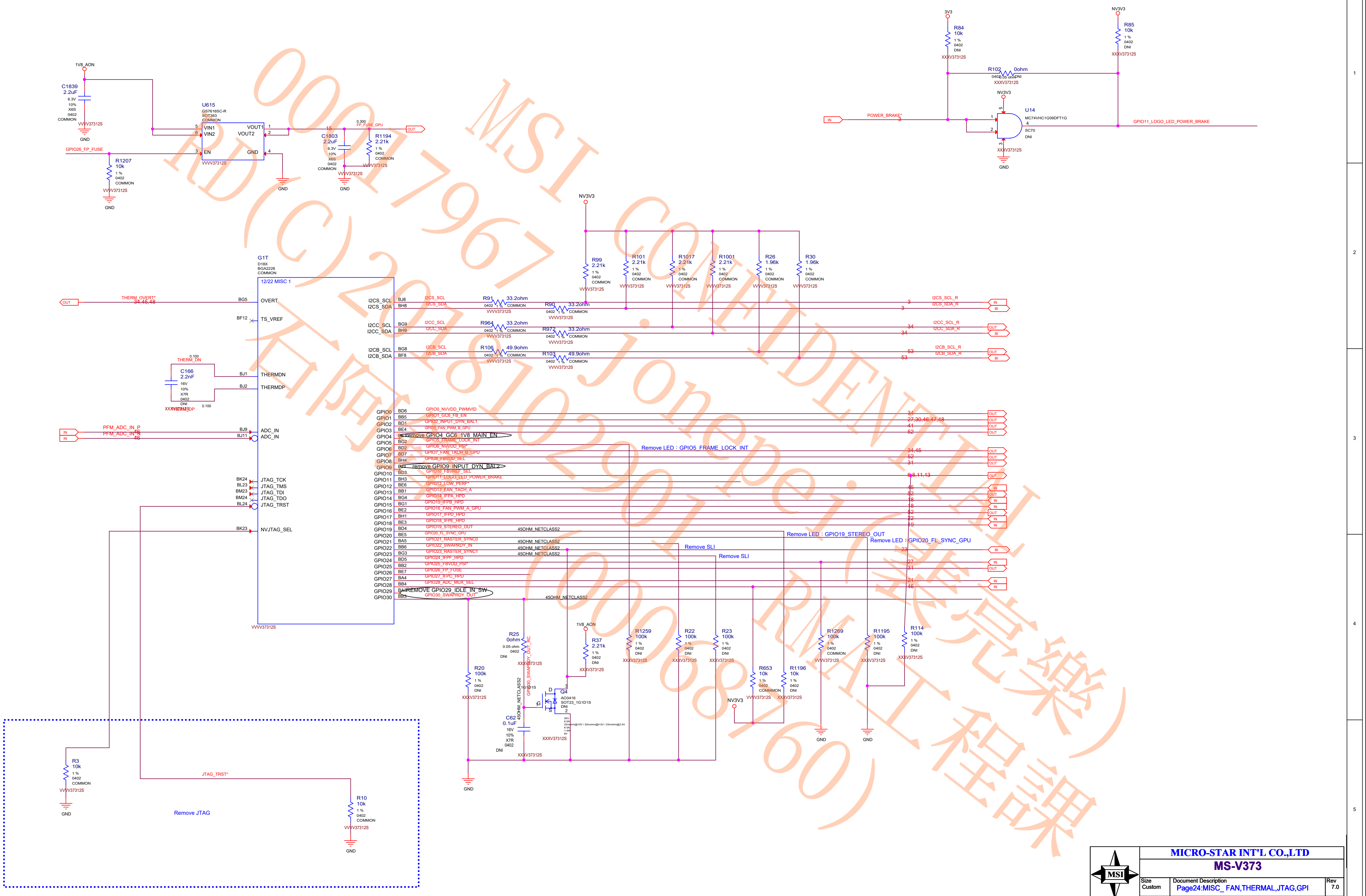
1V8_AON
C1839 2.2uF
U615 G5761SC-R SOT363 COMMON
VIN1
VIN2
EN
VOUT1
VOUT2
GND
GPIO26_FP_FUSE
R1207 10k
FP_FUSE_GPU
C1803 2.2uF
R1194 2.21k
GND
3V3
R84 10k DNI
R102 0ohm
NV3V3
R85 10k DNI
U14 MC74VHC1G09DFT1G SC70 DNI
POWER_BRAKE*
GPIO11_LOGO_LED_POWER_BRAKE
G1T D18X BGA2228 COMMON
12/22 MISC 1
THERM_OVERT*
OVERT
TS_VREF
THERM_DN
C166 2.2nF DNI
THERMDN
THERMDP
PFM_ADC_IN_P
PFM_ADC_IN_N
ADC_IN
JTAG_TCK
JTAG_TMS
JTAG_TDI
JTAG_TDO
JTAG_TRST
NVJTAG_SEL
I2CS_SCL
I2CS_SDA
I2CC_SCL
I2CC_SDA
I2CB_SCL
I2CB_SDA
R91 33.2ohm
R90 33.2ohm
R964 33.2ohm
R972 33.2ohm
R106 49.9ohm
R103 49.9ohm
R99 2.21k
R101 2.21k
R1017 2.21k
R1001 2.21k
R26 1.96k
R30 1.96k
I2CS_SCL_R
I2CS_SDA_R
I2CC_SCL_R
I2CC_SDA_R
I2CB_SCL_R
I2CB_SDA_R
GPIO0 … GPIO30
GPIO0_NVVDD_PWMVID
GPIO1_GC6_FB_EN
GPIO2_INPUT_DYN_BAL1
GPIO3_FAN_PWM_B_GPU
remove GPIO4_GC6_1V8_MAIN_EN
GPIO5_FRAME_LOCK_INT
GPIO6_NVVDD_PSI*
GPIO7_FAN_TACH_B_GPU
GPIO8_FBVDD_SEL
remove GPIO9_INPUT_DYN_BAL2
GPIO10_FBVREF_SEL
GPIO11_LOGO_LED_POWER_BRAKE
GPIO12_LOW_PERF*
GPIO13_FAN_TACH_A
GPIO14_IFPA_HPD
GPIO15_IFPB_HPD
GPIO16_FAN_PWM_A_GPU
GPIO17_IFPD_HPD
GPIO18_IFPE_HPD
GPIO19_STEREO_OUT
GPIO20_FL_SYNC_GPU
GPIO21_RASTER_SYNC0
GPIO22_SWAPRDY_IN
GPIO23_RASTER_SYNC1
GPIO24_IFPF_HPD
GPIO25_FBVDD_PSI*
GPIO26_FP_FUSE
GPIO27_IFPC_HPD
GPIO28_ADC_MUX_SEL
REMOVE GPIO29_IDLE_IN_SW
GPIO30_SWAPRDY_OUT
45OHM_NETCLASS2
Remove LED : GPIO5_FRAME_LOCK_INT
Remove LED : GPIO19_STEREO_OUT
Remove LED : GPIO20_FL_SYNC_GPU
Remove SLI
R20 100k DNI
R25 0ohm DNI
C62 0.1uF DNI
R37 2.21k DNI
Q4 AO3416 SOT23_1G1D1S DNI
R1259 100k DNI
R22 100k DNI
R23 100k DNI
R653 10k
R1196 10k DNI
R1269 100k
R1195 100k DNI
R114 100k DNI
R3 10k
R10 10k
JTAG_TRST*
Remove JTAG

MICRO-STAR INT'L CO.,LTD

MS-V373

Size Custom

Document Description Page24:MISC_ FAN,THERMAL,JTAG,GPI

Rev 7.0

Date: Tuesday, August 21, 2018

Sheet 24 of 54

MSI CONFIDENTIAL
00017967
RD(C)石向
2018102901
Jonepei(裴完樂)
(00068760)
RM工程課

PAGE 25: MISC: ROM, Straps

H=High :Tied to 1.8V
M=Middle:Tied to 0.9V
L=Low :Tied to 0V

STRAP2	STRAP1	STRAP0	RAMCFG[4:0]		
L	L	L	00000	RAMCFG TBD	
L	L	H	00001	RAMCFG TBD	DEFAULT
L	H	L	00010	RAMCFG TBD	
L	H	H	00011	RAMCFG TBD	
H	H	L	00110	RAMCFG TBD	
H	H	H	00111	RAMCFG TBD	

RAMCFG[4:0]	DENSITY	WIDTH	VENDOR
00000	8Gb	256-bit	Samsung
00001	8Gb	256-bit	Micron
00010	8Gb	256-bit	Hynix
00110	16Gb	256-bit	Samsung
00111	16Gb	256-bit	Samsung

ROM_SO	ROM_SI	ROM_SCLK	DUMMY[2:0],FS_OVERT	1:ENABLE 0:DISABLE	
L	L	L	XXX1	FS_OVERT ENABLE	DEFAULT
L	L	M	XXX0	FS_OVERT DISABLE	

STRAP5	STRAP4	STRAP3	SMB_ALT_ADDR	DEVID_SEL	PCIE_CFG	VGA_DEVICE	
M	H	H	1	1	1	1	
M	H	L	1	1	1	0	
M	L	H	1	1	0	1	
M	L	L	1	1	0	0	
L	H	M	1	0	1	1	
L	M	H	1	0	1	0	
L	M	L	1	0	0	1	
L	L	M	1	0	0	0	
H	H	H	0	1	1	1	
H	H	L	0	1	1	0	
H	L	H	0	1	0	1	
H	L	L	0	1	0	0	
L	H	H	0	0	1	1	
L	H	L	0	0	1	0	
L	L	H	0	0	0	1	Default
L	L	L	0	0	0	0	

1:SMB_ALT_ADDR ENABLE
0:SMB_ALT_ADDR DISABLE

1:DEVID_SEL REBRAND
0:DEVID_SEL ORIGNAL

1:PCIE_CFG LOW POWER
0:PCIE_CFG HIGH POWER

1:VGA_DEVICE ENABLE
0:VGA_DEVICE DISABLE

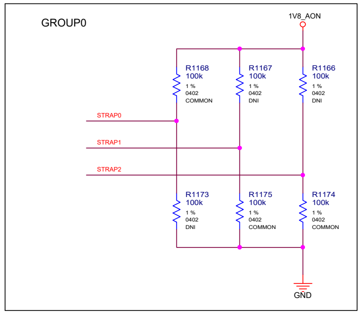
GROUP0
1V8_AON
R1168
100k
1 %
0402
COMMON
R1167
100k
1 %
0402
DNI
R1166
100k
1 %
0402
DNI
STRAP0
STRAP1
STRAP2
R1173
100k
1 %
0402
DNI
R1175
100k
1 %
0402
COMMON
R1174
100k
1 %
0402
COMMON
GND

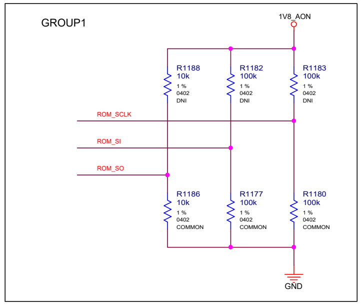
GROUP1
1V8_AON
R1188
10k
1 %
0402
DNI
R1182
100k
1 %
0402
DNI
R1183
100k
1 %
0402
DNI
ROM_SCLK
ROM_SI
ROM_SO
R1186
10k
1 %
0402
COMMON
R1177
100k
1 %
0402
COMMON
R1180
100k
1 %
0402
COMMON
GND

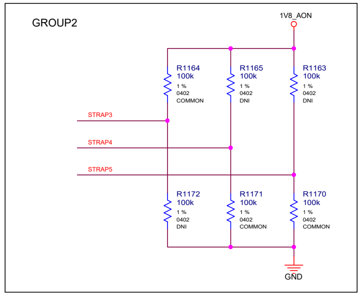
GROUP2
1V8_AON
R1164
100k
1 %
0402
COMMON
R1165
100k
1 %
0402
DNI
R1163
100k
1 %
0402
DNI
STRAP3
STRAP4
STRAP5
R1172
100k
1 %
0402
DNI
R1171
100k
1 %
0402
COMMON
R1170
100k
1 %
0402
COMMON
GND

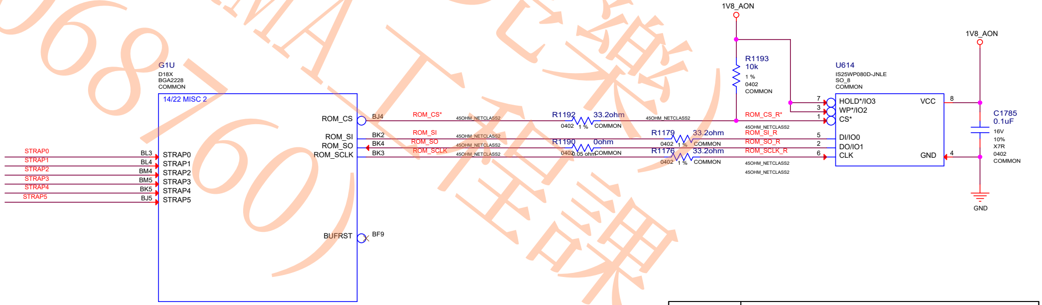
G1U
D18X
BGA2228
COMMON
14/22 MISC 2
STRAP0
STRAP1
STRAP2
STRAP3
STRAP4
STRAP5
BL3
BL4
BM4
BM5
BK5
BJ5
ROM_CS
ROM_SI
ROM_SO
ROM_SCLK
BJ4
BK2
BK4
BK3
BUFRST
BF9
ROM_CS*
ROM_SI
ROM_SO
ROM_SCLK
45OHM_NETCLASS2
R1192
33.2ohm
0402
1 %
COMMON
R1190
0ohm
0402
0.05 ohm
COMMON
R1179
33.2ohm
0402
1 %
COMMON
R1176
33.2ohm
0402
1 %
COMMON
1V8_AON
R1193
10k
1 %
0402
COMMON
ROM_CS_R*
ROM_SI_R
ROM_SO_R
ROM_SCLK_R
U614
IS25WP080D-JNLE
SO_8
COMMON
7
3
1
5
2
6
HOLD*/IO3
WP*/IO2
CS*
DI/IO0
DO/IO1
CLK
VCC
GND
8
4
1V8_AON
C1785
0.1uF
16V
10%
X7R
0402
COMMON
GND

MICRO-STAR INT'L CO.,LTD
MS-V373

Size	Document Description	Rev
Custom	Page25:MISC3_ ROM, STRAPS	7.0

Date: Tuesday, August 21, 2018 | Sheet 25 of 54

MSI CONFIDENTIAL
jonepei(裴亮樂)
RMA

PAGE 26: MISC: XTAL. PLL

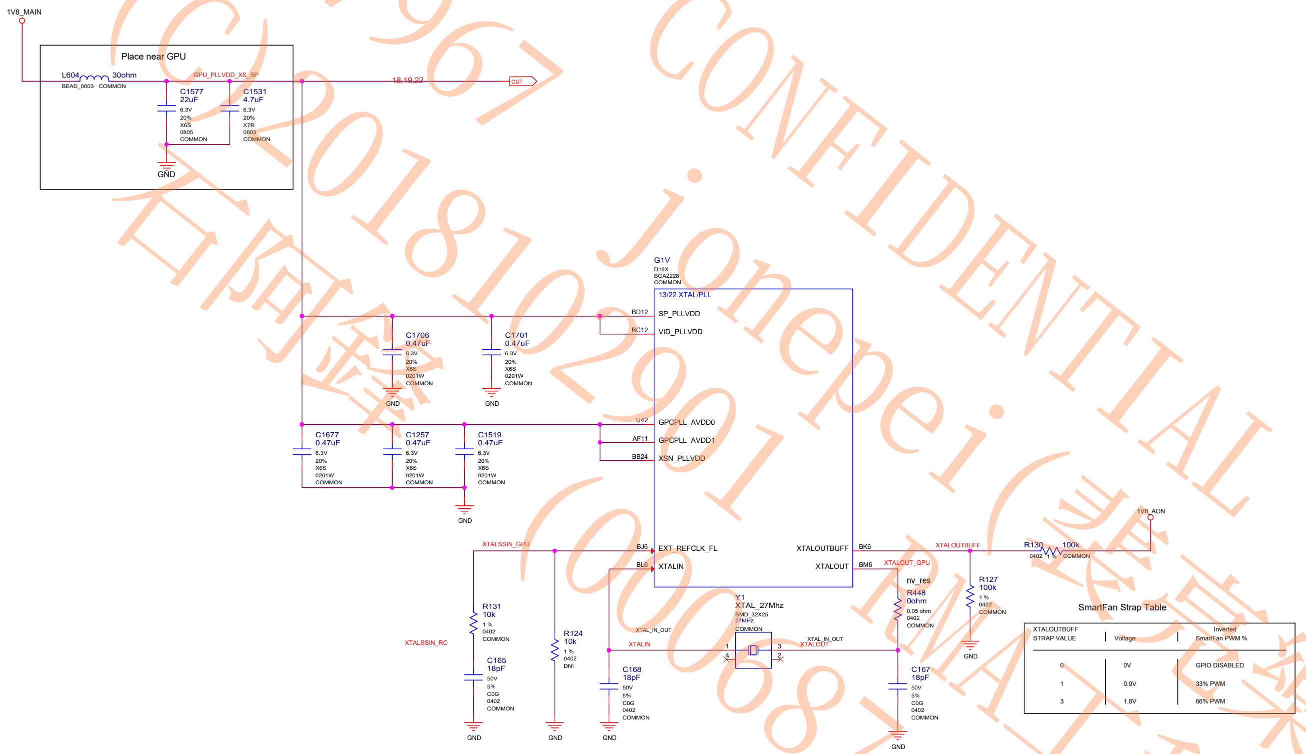
1V8_MAIN
Place near GPU
L604
30ohm
BEAD_0603 COMMON
GPU_PLLVDD_XS_SP
18,19,22
OUT
C1577
22uF
6.3V
20%
X6S
0805
COMMON
C1531
4.7uF
6.3V
20%
X7R
0603
COMMON
GND
G1V
D18X
BGA2228
COMMON
13/22 XTAL/PLL
BD12
SP_PLLVDD
BC12
VID_PLLVDD
U42
GPCPLL_AVDD0
AF11
GPCPLL_AVDD1
BB24
XSN_PLLVDD
BJ6
EXT_REFCLK_FL
BL6
XTALIN
XTALOUTBUFF
BK6
XTALOUT
BM6
C1706
0.47uF
6.3V
20%
X6S
0201W
COMMON
C1701
0.47uF
6.3V
20%
X6S
0201W
COMMON
C1677
0.47uF
6.3V
20%
X6S
0201W
COMMON
C1257
0.47uF
6.3V
20%
X6S
0201W
COMMON
C1519
0.47uF
6.3V
20%
X6S
0201W
COMMON
GND
XTALSSIN_GPU
XTALSSIN_RC
R131
10k
1 %
0402
COMMON
C165
18pF
50V
5%
C0G
0402
COMMON
R124
10k
1 %
0402
DNI
XTAL_IN_OUT
XTALIN
C168
18pF
50V
5%
C0G
0402
COMMON
Y1
XTAL_27Mhz
SMD_32X25
27MHz
COMMON
1
4
3
2
XTAL_IN_OUT
XTALOUT
XTALOUT_GPU
nv_res
R448
0ohm
0.05 ohm
0402
COMMON
C167
18pF
50V
5%
C0G
0402
COMMON
XTALOUTBUFF
R127
100k
1 %
0402
COMMON
R130
100k
0402
1 %
COMMON
1V8_AON
GND

SmartFan Strap Table

XTALOUTBUFF STRAP VALUE	Voltage	Inverted SmartFan PWM %
0	0V	GPIO DISABLED
1	0.9V	33% PWM
3	1.8V	66% PWM

MSI CONFIDENTIAL
00017967 jonepei(裴亮樂)
RD(C)2018102901 RMA工程課
石向鋒(00068760)

MICRO-STAR INT'L CO.,LTD
MS-V373

Size	Document Description	Rev
Custom	Page26:MISC_ XTAL, PLL	7.0

Date: Tuesday, August 21, 2018 | Sheet 26 of 54

PAGE 27: MISC: USB PPC

PIN	ANX	CYP
1	TP	TP
2	RESET	VBUS_MON
3	NC	NC
4	ROLE_SEL (PD)	CC2
5	NC	VCON_5V
6	VDDD (3.3V)	CC1
7	VBUS_MON	RESET
8	NC	NC
9	CC2	I2CM_SDA
10	VCON_5V	I2CM_SCL
11	CC1	HPD
12	VDDD (3.3V)	NC
13	DVDD_IO (1.8V)	NC
14	VBUS_FET_EN	VBUS_FET_EN
15	DSCH_CTL	DSCH_CTL
16	HPD	I2CS_SDA
17	I2CM_SDA	I2CS_SCL
18	I2CM_SCL	NC
19	DVDD_IO (1.8V)	GND
20	NC	VDDD (3.3V)
21	I2CS_SDA	DVDD_IO (1.8V)
22	I2CS_SCL	VCCD (100nF)
23	SINK_CLT (PD)	NC
24	PWR_EN	PWR_EN

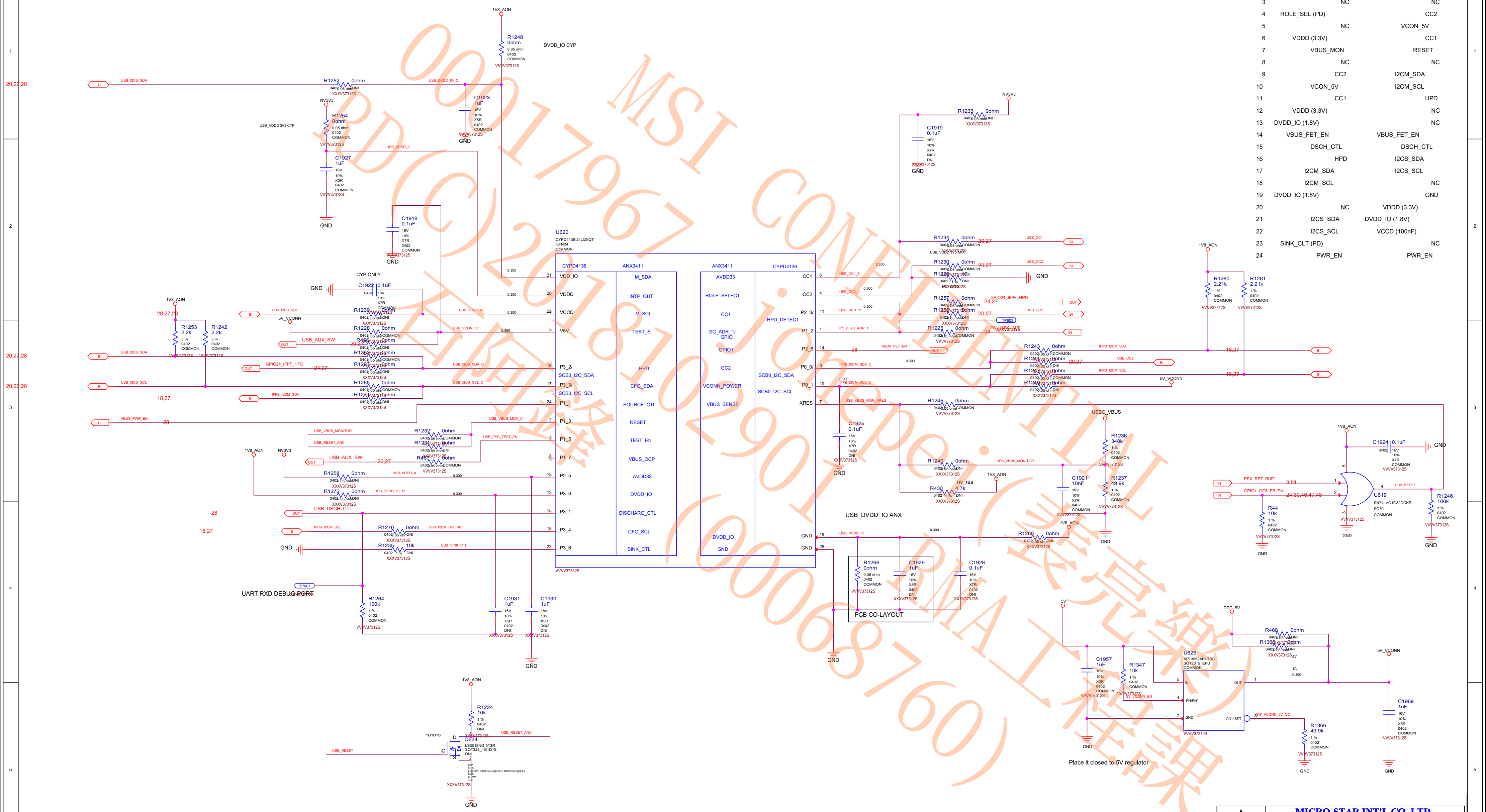
DVDD_IO CYP
1V8_AON
R1248 0ohm 0.05 ohm 0402 COMMON
R1252 0ohm 0402 0.05 ohm DNI
USB_I2CS_SDA
USB_DVDD_IO_C
C1923 1uF 16V 10% X5R 0402 COMMON
NV3V3
R1254 0ohm 0.05 ohm 0402 COMMON
USB_VDDD 3V3 CYP
USB_VDDD_C
C1927 1uF 16V 10% X5R 0402 COMMON
C1918 0.1uF 16V 10% X7R 0402 COMMON
CYP ONLY
C1922 0.1uF 0402 16V 10% X7R COMMON
R1239 0ohm 0402 0.05 ohm DNI
USB_VCCD_C
5V_VCONN
R1228 0ohm 0402 0.05 ohm COMMON
USB_VCON_5V
USB_AUX_SW
R466 0ohm
R1262 0ohm
GPIO24_IFPF_HPD
R1267 0ohm
USB_I2CS_SDA_C
USB_I2CS_SCL
R1265 0ohm
USB_I2CS_SCL_C
R1271 0ohm
IFPB_I2CM_SDA
R1253 2.2k 5 % 0402 COMMON
R1242 2.2k 5 % 0402 COMMON
VBUS_PWR_EN
USB_VBUS_MONITOR
R1232 0ohm
USB_VBUS_MON_C
USB_RESET_ANX
R1231 0ohm
USB_PPC_TEST_EN
R467 0ohm
R1258 0ohm
USB_VDDD_A
R1272 0ohm
USB_DVDD_IO_13
USB_DSCH_CTL
IFPB_I2CM_SCL
R1270 0ohm
USB_I2CM_SCL_18
R1235 10k 0402 1 % DNI
USB_SINK_CTL
TP607
UART RXD DEBUG PORT
R1264 100k 1 % 0402 COMMON
C1931 1uF 16V 10% X5R 0402 DNI
C1930 1uF 16V 10% X5R 0402 DNI
U620
CYPD4136-24LQXQT
QFN24
COMMON
CYPD4136
ANX3411
VDD_IO
VDDD
VCCD
V5V
P3_2/ SCB3_I2C_SDA
P3_3/ SCB3_I2C_SCL
P1_1
P1_3
P1_5
P1_7
P2_5
P3_0
P3_1
P3_4
P3_6
M_SDA
INTP_OUT
M_SCL
TEST_S
HPD
CFG_SDA
SOURCE_CTL
RESET
TEST_EN
VBUS_OCP
AVDD33
DVDD_IO
DISCHARG_CTL
CFG_SCL
SINK_CTL
AVDD33
ROLE_SELECT
CC1
I2C_ADR_1/ GPIO
GPIO1
CC2
VCONN_POWER
VBUS_SENSE
DVDD_IO
GND
HPD_DETECT
SCB0_I2C_SDA
SCB0_I2C_SCL
CC1
CC2
P2_3/
P1_2
P2_6
P0_0/
P0_1
XRES
NV3V3
R1233 0ohm 0402 0.05 ohm DNI
C1919 0.1uF 16V 10% X7R 0402 DNI
R1234 0ohm
USB_CC1
USB_VDDD 3V3 ANX
R1230 0ohm
USB_CC2
R1229 10k
PD ANX
R1257 0ohm
GPIO24_IFPF_HPD
R1255 0ohm
USB_HPD_11
TP603
R1225 0ohm
P1_2_I2C_ADR_1
PS_USBC_ALT
VBUS_FET_EN
R1243 0ohm
IFPB_I2CM_SDA
R1244 0ohm
IFPB_I2CM_SDA_C
R1247 0ohm
IFPB_I2CM_SCL
R1249 0ohm
IFPB_I2CM_SCL_C
5V_VCONN
R1245 0ohm
USB_VBUS_MON_XRES
USBC_VBUS
C1925 0.1uF 16V 10% X7R 0402 DNI
R1236 348k 1 % 0402 COMMON
R1240 0ohm
USB_VBUS_MONITOR
R430 4.7k 0402 5 % DNI
nv_res
C1921 10nF 16V 10% X7R 0402 COMMON
R1237 49.9k 1 % 0402 COMMON
USB_DVDD_IO ANX
R1268 0ohm
USB_DVDD_IO
R1266 0ohm 0.05 ohm 0402 COMMON
C1929 1uF 16V 10% X5R 0402 DNI
C1928 0.1uF 16V 10% X7R 0402 DNI
PCB CO-LAYOUT
R1260 2.21k 1 % 0402 COMMON
R1261 2.21k 1 % 0402 COMMON
PEX_RST_BUF*
GPIO1_GC6_FB_EN
U619
SN74LVC1G32DCKR
SC70
COMMON
USB_RESET
C1924 0.1uF 0402 16V 10% X7R COMMON
R44 10k 1 % 0402 COMMON
R1246 100k 1 % 0402 COMMON
5V
DDC_5V
R468 0ohm
R1368 0ohm
C1957 1uF 16V 10% X5R 0402 COMMON
R1347 10k 1 % 0402 COMMON
5V_VCONN_EN
U626
APL3552ABI-TRG
SOT23_5_EFU
COMMON
IN
EN/EN*
GND
OUT
OC*/ISET
SW_VCONN_5V_OC
1A
5V_VCONN
C1969 1uF 16V 10% X5R 0402 COMMON
R1366 49.9k 1 % 0402 COMMON
Place it closed to 5V regulator
1V8_AON
R1224 10k 1 % 0402 DNI
Q634
LS3018NG-3T3R
SOT323_1G1D1S
DNI
USB_RESET_ANX
USB_RESET
1G1D1S
GND

MSI CONFIDENTIAL
johnpei (景亮樂)
00017967
RD(C)20181029
(000068760)
RMA工程課

MICRO-STAR INT'L CO.,LTD

MS-V373

Size	Document Description	Rev
Custom	Page27:MISC_ USB PPC	7.0

Date: Tuesday, August 21, 2018 | Sheet 27 of 54

PAGE 28: PS: USB VR

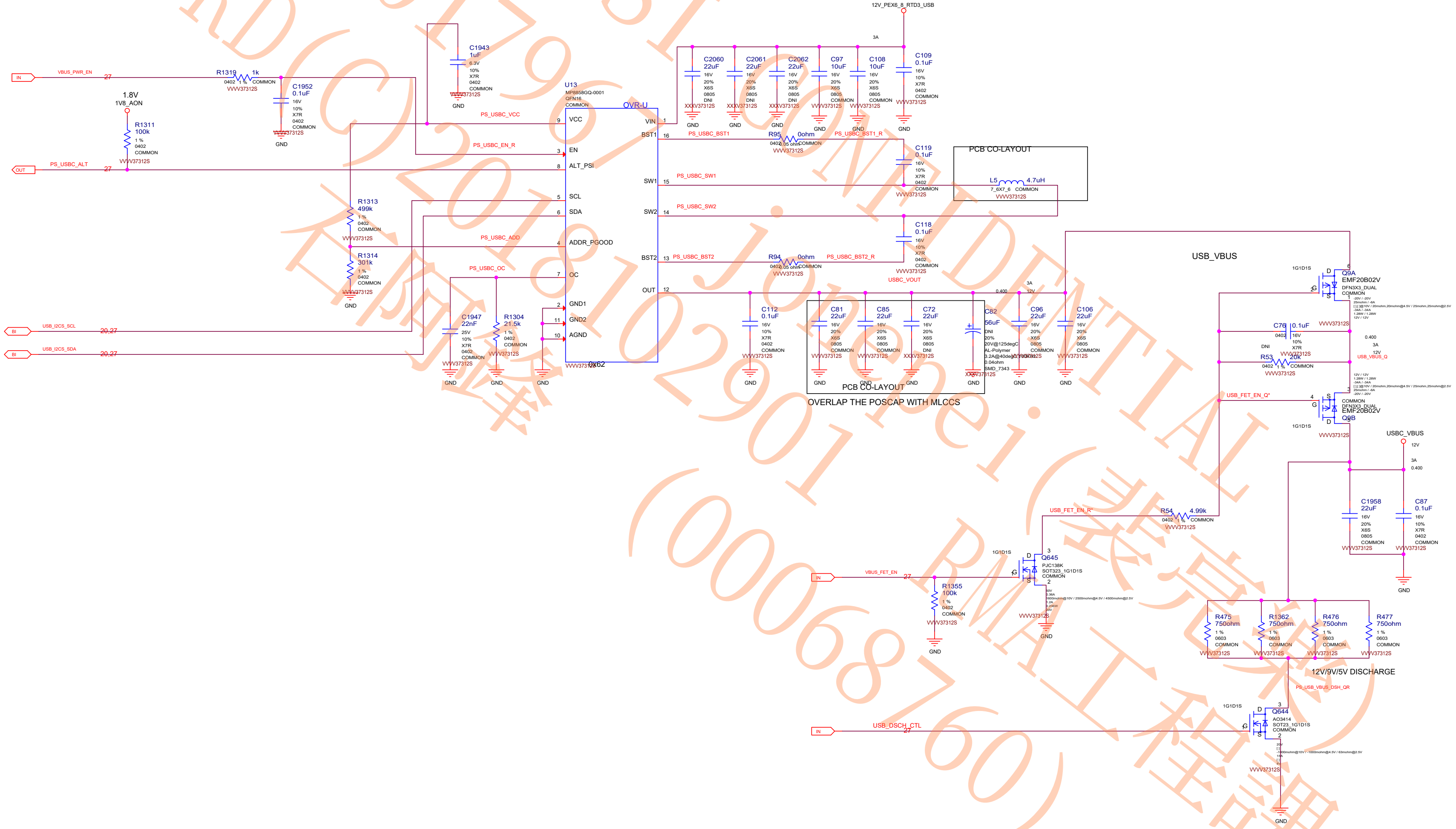

12V_PEX6_8_RTD3_USB
3A
VBUS_PWR_EN
R1319 1k 0402 1% COMMON
C1943 1uF 6.3V 10% X7R 0402 COMMON
C1952 0.1uF 16V 10% X7R 0402 COMMON
1.8V
1V8_AON
R1311 100k 1% 0402 COMMON
PS_USBC_ALT
U13 MP8858GQ-0001 QFN16 COMMON
OVR-U
PS_USBC_VCC
PS_USBC_EN_R
VCC
EN
ALT_PSI
SCL
SDA
ADDR_PGOOD
OC
GND1
GND2
AGND
VIN
BST1
SW1
SW2
BST2
OUT
0x62
R1313 499k 1% 0402 COMMON
R1314 301k 1% 0402 COMMON
PS_USBC_ADD
PS_USBC_OC
USB_I2CS_SCL
USB_I2CS_SDA
C1947 22nF 25V 10% X7R 0402 COMMON
R1304 21.5k 1% 0402 COMMON
C2060 22uF 16V 20% X6S 0805 DNI
C2061 22uF 16V 20% X6S 0805 DNI
C2062 22uF 16V 20% X6S 0805 DNI
C97 10uF 16V 20% X6S 0805 COMMON
C108 10uF 16V 20% X6S 0805 COMMON
C109 0.1uF 16V 10% X7R 0402 COMMON
PS_USBC_BST1
R95 0ohm 0402
PS_USBC_BST1_R
C119 0.1uF 16V 10% X7R 0402 COMMON
PS_USBC_SW1
PS_USBC_SW2
PCB CO-LAYOUT
L5 4.7uH 7_6X7_6 COMMON
C118 0.1uF 16V 10% X7R 0402 COMMON
PS_USBC_BST2
R94 0ohm 0402
PS_USBC_BST2_R
USBC_VOUT
0.400
3A
12V
C112 0.1uF 16V 10% X7R 0402 COMMON
C81 22uF 16V 20% X6S 0805 COMMON
C85 22uF 16V 20% X6S 0805 COMMON
C72 22uF 16V 20% X6S 0805 DNI
C82 56uF DNI 20% 20V@125degC AL-Polymer 3.2A@40degC/100KHz 0.04ohm SMD_7343
C96 22uF 16V 20% X6S 0805 COMMON
C106 22uF 16V 20% X6S 0805 COMMON
PCB CO-LAYOUT
OVERLAP THE POSCAP WITH MLCCS
USB_VBUS
Q9A EMF20B02V DFN3X3_DUAL COMMON
C76 0.1uF 16V 10% X7R 0402 DNI
R53 20K 0402 COMMON
USB_VBUS_Q
USB_FET_EN_Q*
Q9B EMF20B02V DFN3X3_DUAL COMMON
USBC_VBUS
12V
3A
0.400
C1958 22uF 16V 20% X6S 0805 COMMON
C87 0.1uF 16V 10% X7R 0402 COMMON
USB_FET_EN_R*
R54 4.99k 0402 COMMON
VBUS_FET_EN
Q645 PJC138K SOT323_1G1D1S COMMON
R1355 100k 1% 0402 COMMON
R475 750ohm 1% 0603 COMMON
R1362 750ohm 1% 0603 COMMON
R476 750ohm 1% 0603 COMMON
R477 750ohm 1% 0603 COMMON
12V/9V/5V DISCHARGE
PS_USB_VBUS_DSH_QR
USB_DSCH_CTL
Q644 AO3414 SOT23_1G1D1S COMMON
GND
VVVV37312S

MSI CONFIDENTIAL
000179671
RD(C)2018102901
(00068760) RMA工程課

MICRO-STAR INT'L CO.,LTD

MS-V373

Size	Document Description	Rev
Custom	Page28:PS_ USB VR	7.0

Date: Tuesday, August 21, 2018 Sheet 28 of 54

PAGE 29: PS: 5V, 5V_BACKUP

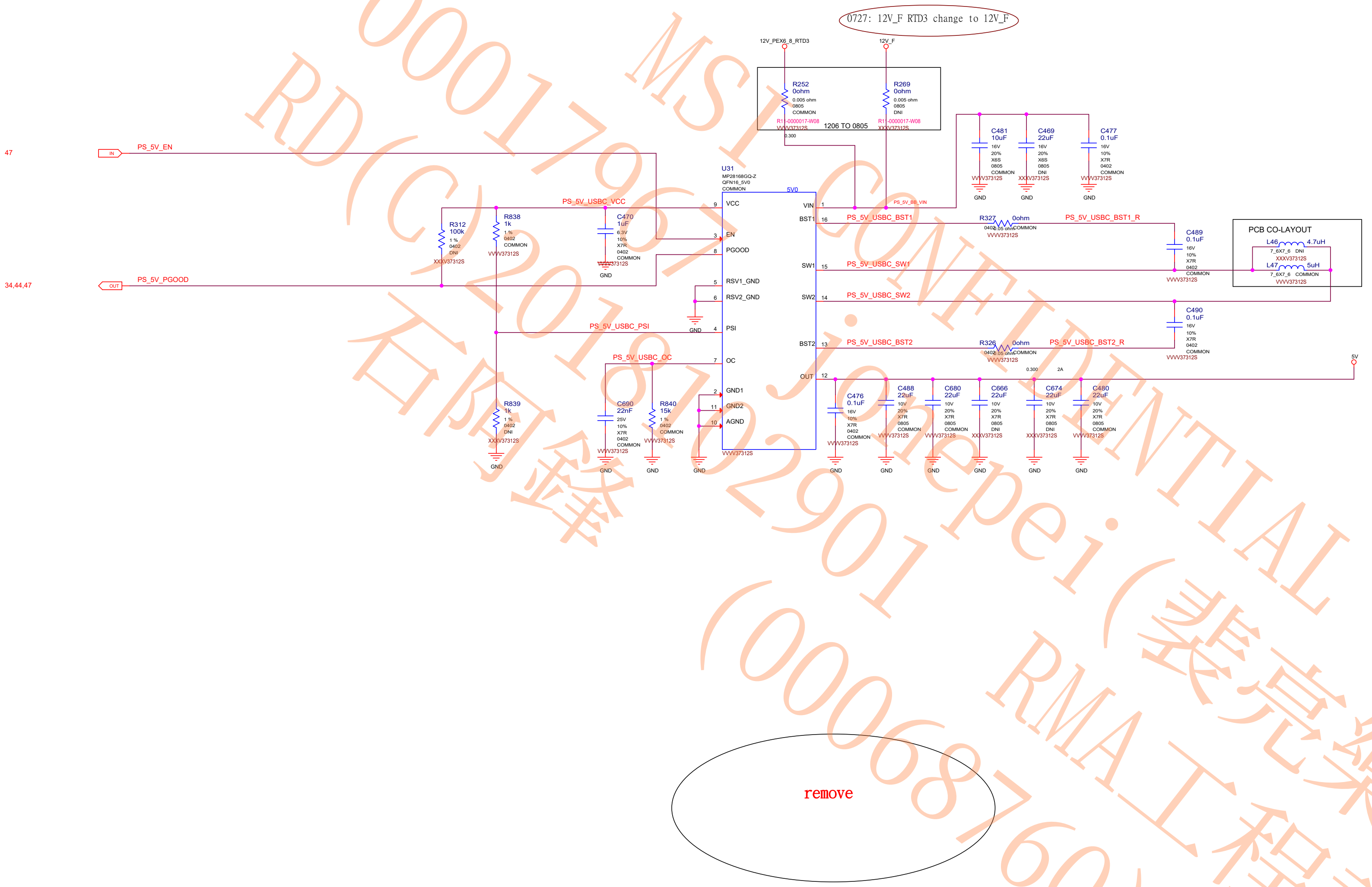
0727: 12V_F RTD3 change to 12V_F
12V_PEX6_8_RTD3
12V_F
R252
0ohm
0.005 ohm
0805
COMMON
R11-0000017-W08
VVVV37312S
0.300
1206 TO 0805
R269
0ohm
0.005 ohm
0805
DNI
R11-0000017-W08
XXXV37312S
C481
10uF
16V
20%
X6S
0805
COMMON
VVVV37312S
C469
22uF
16V
20%
X6S
0805
DNI
XXXV37312S
C477
0.1uF
16V
10%
X7R
0402
COMMON
VVVV37312S
GND
47
IN
PS_5V_EN
34,44,47
OUT
PS_5V_PGOOD
PS_5V_USBC_VCC
R312
100k
1 %
0402
DNI
XXXV37312S
R838
1k
1 %
0402
COMMON
VVVV37312S
C470
1uF
6.3V
10%
X7R
0402
COMMON
VVVV37312S
PS_5V_USBC_PSI
PS_5V_USBC_OC
R839
1k
1 %
0402
DNI
XXXV37312S
C690
22nF
25V
10%
X7R
0402
COMMON
VVVV37312S
R840
15k
1 %
0402
COMMON
VVVV37312S
U31
MP28168GQ-Z
QFN16_5V0
COMMON
5V0
9 VCC
3 EN
8 PGOOD
5 RSV1_GND
6 RSV2_GND
4 PSI
7 OC
2 GND1
11 GND2
10 AGND
VIN 1
BST1 16
SW1 15
SW2 14
BST2 13
OUT 12
VVVV37312S
PS_5V_BB_VIN
PS_5V_USBC_BST1
R327
0ohm
0402
0.05 ohm
COMMON
VVVV37312S
PS_5V_USBC_BST1_R
C489
0.1uF
16V
10%
X7R
0402
COMMON
VVVV37312S
PCB CO-LAYOUT
L46
4.7uH
7_6X7_6 DNI
XXXV37312S
L47
5uH
7_6X7_6 COMMON
VVVV37312S
PS_5V_USBC_SW1
PS_5V_USBC_SW2
C490
0.1uF
16V
10%
X7R
0402
COMMON
VVVV37312S
PS_5V_USBC_BST2
R326
0ohm
0402
0.05 ohm
COMMON
VVVV37312S
PS_5V_USBC_BST2_R
0.300
2A
5V
C476
0.1uF
16V
10%
X7R
0402
COMMON
VVVV37312S
C488
22uF
10V
20%
X7R
0805
COMMON
VVVV37312S
C680
22uF
10V
20%
X7R
0805
COMMON
VVVV37312S
C666
22uF
10V
20%
X7R
0805
DNI
XXXV37312S
C674
22uF
10V
20%
X7R
0805
DNI
XXXV37312S
C480
22uF
10V
20%
X7R
0805
COMMON
VVVV37312S
remove

MSI CONFIDENTIAL
000179617 RD(C) 20180829 01 Jonepei(裴亮樂)
石尚鋒
(00068760) RMA工程課

MICRO-STAR INT'L CO.,LTD

MS-V373

Size	Document Description	Rev
Custom	Page29:PS_ 5V, 5V BACKUP	7.0

Date: Tuesday, August 21, 2018
Sheet 29 of 54

PAGE 30: PS: PEXVDD, 1V8

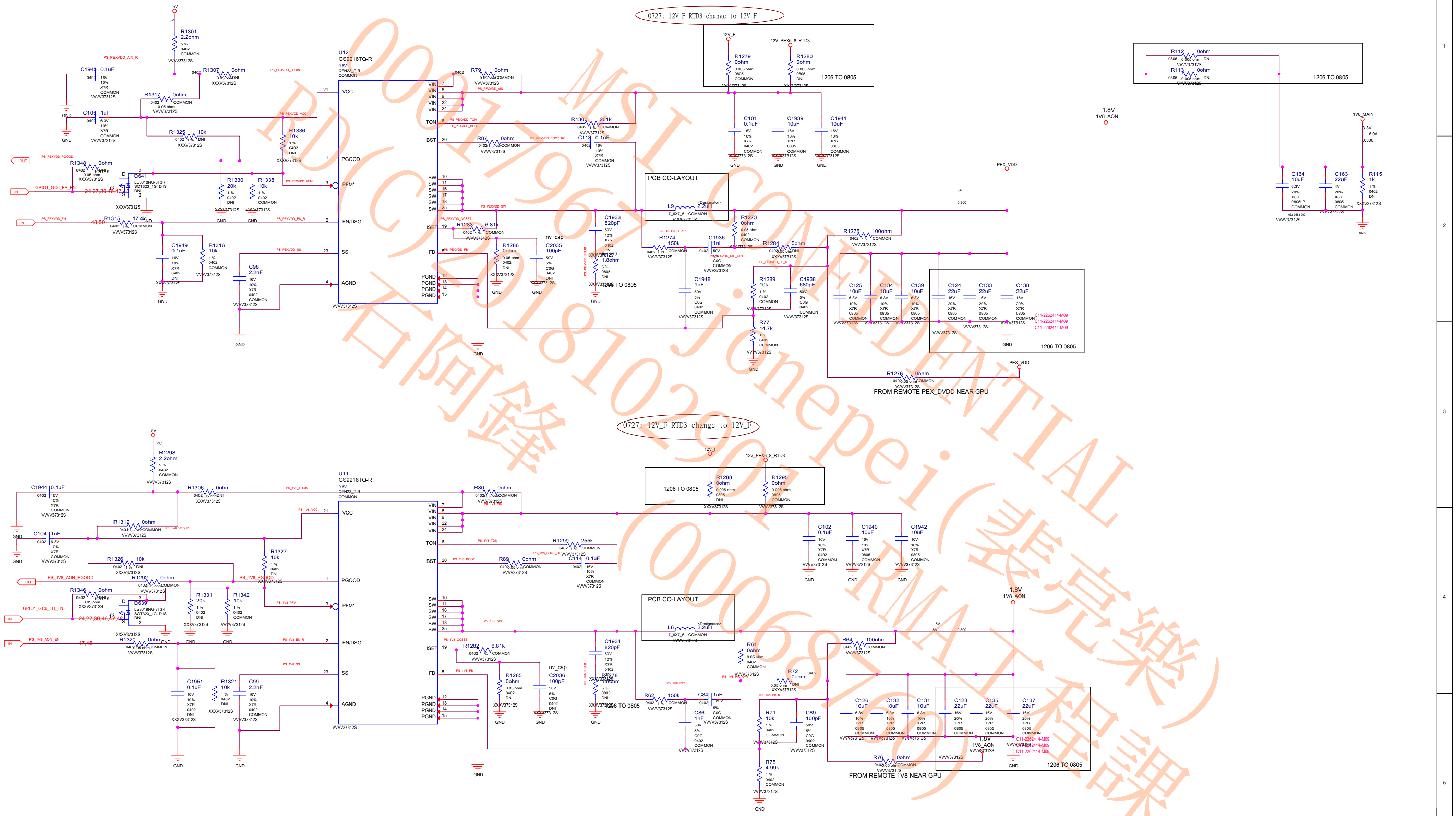
5V
R1301 2.2ohm 5 % 0402 COMMON
PS_PEXVDD_AIN_R
C1945 0.1uF 16V 10% X7R COMMON
R1307 0ohm DNI
PS_PEXVDD_LDOIN
U12 GS9216TQ-R 0.6V QFN23_PIR COMMON
VCC
VIN
TON
BST
PGOOD
PFM*
EN/DSG
ISET
FB
SS
AGND
PGND
SW
R1317 0ohm
C105 1uF 6.3V 10% X7R COMMON
R1325 10k DNI
R1336 10k 1 % 0402 DNI
PS_PEXVDD_PGOOD
OUT
R1348 0ohm
Q641 LS3018NG-3T3R SOT323_1G1D1S DNI
GPIO1_GC6_FB_EN
IN
24,27,30,45,47,48
R1330 20k 1 % 0402 DNI
R1338 10k 1 % 0402 COMMON
PS_PEXVDD_EN
R1315 17.4k
PS_PEXVDD_EN_R
48,50
C1949 0.1uF 16V 10% X7R 0402 DNI
R1316 10k 1 % 0402 COMMON
C98 2.2nF 16V 10% X7R 0402 COMMON
PS_PEXVDD_SS
GND
R79 0ohm
PS_PEXVDD_VIN
R1300 261k
PS_PEXVDD_TON
PS_PEXVDD_BOOT
R87 0ohm
PS_PEXVDD_BOOT_RC
C113 0.1uF 16V 10% X7R 0402 COMMON
PCB CO-LAYOUT
L9 7_6X7_6 COMMON 2.2uH
PS_PEXVDD_SW
PS_PEXVDD_OCSET
R1283 6.81k
R1286 0ohm 0.05 ohm 0402 DNI
nv_cap
C2035 100pF 50V 5% C0G 0402 DNI
C1933 820pF 50V 10% X7R 0402 DNI
R1277 1.8ohm 5 % 0805 DNI
1206 TO 0805
R1274 150k
PS_PEXVDD_RIC
C1936 1nF 50V C0G COMMON
PS_PEXVDD_RIC_OFI
R1273 0ohm 0.05 ohm 0402 COMMON
R1284 0ohm DNI
PS_PEXVDD_FB_R
C1948 1nF 50V 5% C0G 0402 COMMON
R1289 10k 1 % 0402 COMMON
C1938 680pF 50V 5% C0G 0402 COMMON
R77 14.7k 1 % 0402 COMMON
0727: 12V_F RTD3 change to 12V_F
12V_F
12V_PEX6_8_RTD3
R1279 0ohm 0.005 ohm 0805 COMMON
R1280 0ohm 0.005 ohm 0805 DNI
1206 TO 0805
C101 0.1uF 16V 10% X7R 0402 COMMON
C1939 10uF 16V 10% X7R 0805 COMMON
C1941 10uF 16V 10% X7R 0805 COMMON
R1275 100ohm
PEX_VDD
5A
0.300
C125 10uF 6.3V 10% X7R 0805 COMMON
C134 10uF 6.3V 10% X7R 0805 COMMON
C139 10uF 6.3V 10% X7R 0805 COMMON
C124 22uF 16V 20% X7R 0805 COMMON
C133 22uF 16V 20% X7R 0805 COMMON
C138 22uF 16V 20% X7R 0805 COMMON
C11-2262414-M09
1206 TO 0805
R1276 0ohm
FROM REMOTE PEX_DVDD NEAR GPU
R112 0ohm 0805 0.005 ohm DNI
R113 0ohm 0805 0.005 ohm DNI
1206 TO 0805
1.8V
1V8_AON
1V8_MAIN
3.3V 6.0A 0.300
C164 10uF 6.3V 20% X6S 0805LP COMMON
C163 22uF 4V 20% X6S 0805 COMMON
R115 1k 1 % 0402 DNI
5V
R1298 2.2ohm 5 % 0402 COMMON
C1944 0.1uF 16V 10% X7R COMMON
R1306 0ohm DNI
PS_1V8_LDOIN
U11 GS9216TQ-R 0.6V QFN23_PIR COMMON
PS_1V8_VCC
R1312 0ohm
PS_1V8_VDD_R
C104 1uF 6.3V 10% X7R COMMON
R1326 10k DNI
R1327 10k 1 % 0402 DNI
PS_1V8_AON_PGOOD
PS_1V8_PGOOD
R1292 0ohm
R1346 0ohm
Q639 LS3018NG-3T3R SOT323_1G1D1S DNI
GPIO1_GC6_FB_EN
24,27,30,46,47,48
R1331 20k 1 % 0402 DNI
R1342 10k 1 % 0402 COMMON
PS_1V8_PFM
PS_1V8_AON_EN
47,48
R1320 0ohm
PS_1V8_EN_R
PS_1V8_SS
C1951 0.1uF 16V 10% X7R 0402 DNI
R1321 10k 1 % 0402 DNI
C99 2.2nF 16V 10% X7R 0402 COMMON
R80 0ohm
PS_1V8_TON
R1299 255k
PS_1V8_BOOT
R89 0ohm
PS_1V8_BOOT_RC
C114 0.1uF 16V 10% X7R COMMON
PCB CO-LAYOUT
L6 7_6X7_6 COMMON 2.2uH
PS_1V8_SW
PS_1V8_OCSET
R1282 6.81k
R1285 0ohm 0.05 ohm 0402 DNI
nv_cap
C2036 100pF 50V 5% C0G 0402 DNI
C1934 820pF 50V 10% X7R 0402 DNI
R1278 1.8ohm 5 % 0805 DNI
1206 TO 0805
R62 150k
PS_1V8_RIC
C84 1nF 50V
R61 0ohm 0.05 ohm 0402 COMMON
R72 0ohm DNI
PS_1V8_FB_R
C86 1nF 50V 5% C0G 0402 COMMON
R71 10k 1 % 0402 COMMON
C89 100pF 50V 5% C0G 0402 COMMON
R75 4.99k 1 % 0402 COMMON
0727: 12V_F RTD3 change to 12V_F
12V_F
12V_PEX6_8_RTD3
R1288 0ohm 0.005 ohm 0805 DNI
R1295 0ohm 0.005 ohm 0805 COMMON
1206 TO 0805
C102 0.1uF 16V 10% X7R 0402 COMMON
C1940 10uF 16V 10% X7R 0805 COMMON
C1942 10uF 16V 10% X7R 0805 COMMON
1.8V
1V8_AON
1.5V
0.300
R64 100ohm
C126 10uF 6.3V 10% X7R 0805 COMMON
C132 10uF 6.3V 10% X7R 0805 COMMON
C131 10uF 6.3V 10% X7R 0805 COMMON
C123 22uF 16V 20% X7R 0805 COMMON
C135 22uF 16V 20% X7R 0805 COMMON
C137 22uF 16V 20% X7R 0805 COMMON
C11-2262414-M09
1.8V 1V8_AON
R76 0ohm
1206 TO 0805
FROM REMOTE 1V8 NEAR GPU

00017967 Jonepei(裴亮樂)
MSI CONFIDENTIAL
RD(C) 20181029(00067810)
石向鋒
RMA工程課

MICRO-STAR INT'L CO.,LTD

MS-V373

Size	Document Description	Rev
Custom	Page30:PS_PEXVDD, 1V8	7.0

Date: Tuesday, August 21, 2018 Sheet 30 of 54

PAGE 31: PS: FBVDD Controller

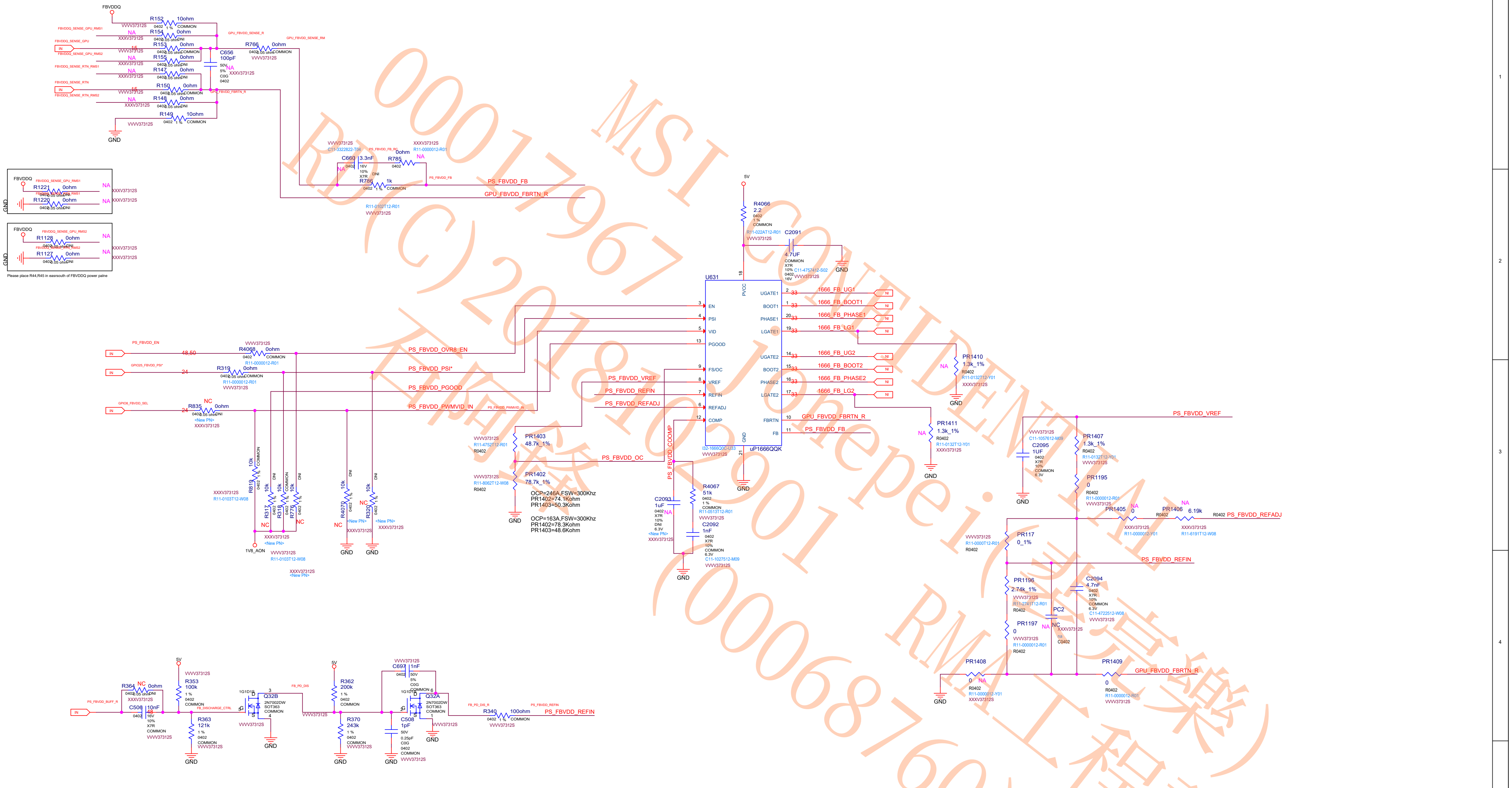
FBVDDQ
R152 10ohm
R154 0ohm
R153 0ohm
R155 0ohm
R147 0ohm
R150 0ohm
R148 0ohm
R149 10ohm
C656 100pF
R766 0ohm
FBVDDQ_SENSE_GPU
FBVDDQ_SENSE_RTN
GPU_FBVDD_SENSE_R
GPU_FBVDD_SENSE_RM
GND
R1221 0ohm
R1220 0ohm
R1128 0ohm
R1127 0ohm
Please place R44,R45 in eastsouth of FBVDDQ power palne
C660 3.3nF
R785 0ohm
R786 1k
PS_FBVDD_FB
GPU_FBVDD_FBRTN_R
5V
R4066 2.2
C2091 4.7UF
U631
uP1666QQK
PVCC
EN
PSI
VID
PGOOD
FS/OC
VREF
REFIN
REFADJ
COMP
UGATE1
BOOT1
PHASE1
LGATE1
UGATE2
BOOT2
PHASE2
LGATE2
FBRTN
FB
1666_FB_UG1
1666_FB_BOOT1
1666_FB_PHASE1
1666_FB_LG1
1666_FB_UG2
1666_FB_BOOT2
1666_FB_PHASE2
1666_FB_LG2
GPU_FBVDD_FBRTN_R
PS_FBVDD_FB
PS_FBVDD_EN
R4068 0ohm
PS_FBVDD_OVR8_EN
R319 0ohm
PS_FBVDD_PSI*
PS_FBVDD_PGOOD
R835 0ohm
PS_FBVDD_PWMVID_IN
PS_FBVDD_VREF
PS_FBVDD_REFIN
PS_FBVDD_REFADJ
PS_FBVDD_OC
PS_FBVDD_COOMP
R819 10k
R317 10k
R318 10k
R779 10k
R4070 10k
R320 10k
1V8_AON
PR1403 48.7k_1%
PR1402 78.7k_1%
OCP=246A,FSW=300Khz
PR1402=74.1Kohm
PR1403=50.3Kohm
OCP=163A,FSW=300Khz
PR1402=78.3Kohm
PR1403=48.6Kohm
C2093 1uF
R4067 51k
C2092 1nF
PR1410 1.3k_1%
PR1411 1.3k_1%
C2095 1UF
PR1407 1.3k_1%
PR1195 0
PR1405 0
PR1406 6.19k
PR117 0_1%
PR1196 2.74k_1%
PR1197 0
PC2
C2094 4.7nF
PR1408 0
PR1409 0
R364 0ohm
R353 100k
C506 10nF
R363 121k
Q32B 2N7002DW SOT363
R362 200k
R370 243k
C697 1nF
C508 1pF
Q32A 2N7002DW SOT363
R340 100ohm
PS_FBVDD_REFIN
NA
NC
DNI
COMMON

MSI CONFIDENTIAL
00017967
RD(C)20181022001
Jonepei(裘宗樂)
RMA工程課
(00068760)

MICRO-STAR INT'L CO.,LTD
MS-V373

Size	Document Description	Rev
Custom	Page31:PS_ FBVDD CONTROLLER	7.0

Date: Tuesday, August 21, 2018 Sheet 31 of 54

PAGE 32: PS: FBVDD Controller OVR3

MICRO-STAR INT'L CO.,LTD
MS-V373

Size	Document Description	Rev
Custom	Page32:PS_ FBVDD CONTROLLER OVR3	7.0

Date: Tuesday, August 21, 2018 Sheet 32 of 54

PAGE 33: PS: FBVDD Phase 1, 2

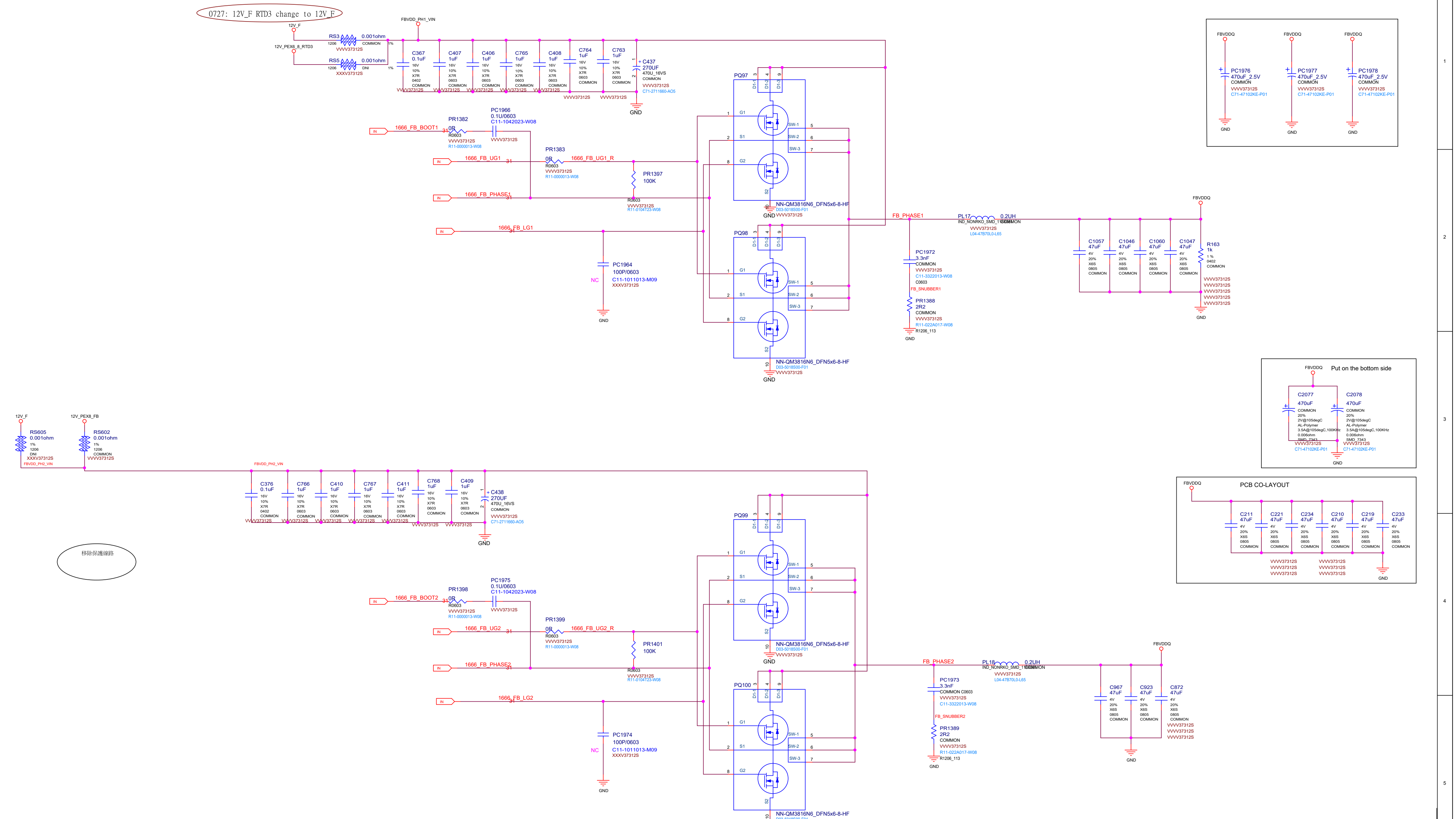

0727: 12V_F RTD3 change to 12V_F
12V_F
12V_PEX6_8_RTD3
FBVDD_PH1_VIN
RS3 0.001ohm 1206 COMMON 1% VVVV37312S
RS5 0.001ohm 1206 DNI 1% XXXV37312S
C367 0.1uF 16V 10% X7R 0402 COMMON
C407 1uF 16V 10% X7R 0603 COMMON
C406 1uF 16V 10% X7R 0603 COMMON
C765 1uF 16V 10% X7R 0603 COMMON
C408 1uF 16V 10% X7R 0603 COMMON
C764 1uF 16V 10% X7R 0603 COMMON
C763 1uF 16V 10% X7R 0603 COMMON
C437 270UF 470U_16VS COMMON VVVV37312S C71-2711680-A05
GND
PQ97 NN-QM3816N6_DFN5x6-8-HF D03-5018S00-F01 VVVV37312S
PQ98 NN-QM3816N6_DFN5x6-8-HF D03-5018S00-F01 VVVV37312S
G1 S1 G2 S2 SW-1 SW-2 SW-3 D1-1 D1-2 D1-3
1666_FB_BOOT1
PR1382 0R R0603 VVVV37312S R11-0000013-W08
PC1966 0.1U/0603 C11-1042023-W08 VVVV37312S
1666_FB_UG1
PR1383 0R R0603 VVVV37312S R11-0000013-W08
1666_FB_UG1_R
PR1397 100K R0603 VVVV37312S R11-0104123-W08
1666_FB_PHASE1
1666_FB_LG1
PC1964 100P/0603 C11-1011013-M09 XXXV37312S
NC
FB_PHASE1
PL17 0.2UH IND_NONRKO_SMD_1 COMMON VVVV37312S L04-47B70L0-L65
PC1972 3.3nF COMMON VVVV37312S C11-3322013-W08 C0603
FB_SNUBBER1
PR1388 2R2 COMMON VVVV37312S R11-022A017-W08 R1206_113
FBVDDQ
C1057 47uF 4V 20% X6S 0805 COMMON
C1046 47uF 4V 20% X6S 0805 COMMON
C1060 47uF 4V 20% X6S 0805 COMMON
C1047 47uF 4V 20% X6S 0805 COMMON
R163 1k 1% 0402 COMMON
PC1976 470uF_2.5V COMMON VVVV37312S C71-47102KE-P01
PC1977 470uF_2.5V COMMON VVVV37312S C71-47102KE-P01
PC1978 470uF_2.5V COMMON VVVV37312S C71-47102KE-P01
Put on the bottom side
C2077 470uF COMMON 20% 2V@105degC AL-Polymer 3.5A@105degC,100KHz 0.006ohm SMD_7343 VVVV37312S C71-47102KE-P01
C2078 470uF COMMON 20% 2V@105degC AL-Polymer 3.5A@105degC,100KHz 0.006ohm SMD_7343 VVVV37312S C71-47102KE-P01
PCB CO-LAYOUT
C211 47uF 4V 20% X6S 0805 COMMON
C221 47uF 4V 20% X6S 0805 COMMON
C234 47uF 4V 20% X6S 0805 COMMON
C210 47uF 4V 20% X6S 0805 COMMON
C219 47uF 4V 20% X6S 0805 COMMON
C233 47uF 4V 20% X6S 0805 COMMON
12V_F
12V_PEX8_FB
RS605 0.001ohm 1% 1206 DNI XXXV37312S
RS602 0.001ohm 1% 1206 COMMON VVVV37312S
FBVDD_PH2_VIN
C376 0.1uF 16V 10% X7R 0402 COMMON
C766 1uF 16V 10% X7R 0603 COMMON
C410 1uF 16V 10% X7R 0603 COMMON
C767 1uF 16V 10% X7R 0603 COMMON
C411 1uF 16V 10% X7R 0603 COMMON
C768 1uF 16V 10% X7R 0603 COMMON
C409 1uF 16V 10% X7R 0603 COMMON
C438 270UF 470U_16VS COMMON VVVV37312S C71-2711680-A05
移除保護線路
PQ99 NN-QM3816N6_DFN5x6-8-HF D03-5018S00-F01 VVVV37312S
PQ100 NN-QM3816N6_DFN5x6-8-HF D03-5018S00-F01 VVVV37312S
1666_FB_BOOT2
PR1398 0R R0603 VVVV37312S R11-0000013-W08
PC1975 0.1U/0603 C11-1042023-W08 VVVV37312S
1666_FB_UG2
PR1399 0R R0603 VVVV37312S R11-0000013-W08
1666_FB_UG2_R
PR1401 100K R0603 VVVV37312S R11-0104123-W08
1666_FB_PHASE2
1666_FB_LG2
PC1974 100P/0603 C11-1011013-M09 XXXV37312S
FB_PHASE2
PL18 0.2UH IND_NONRKO_SMD_1 COMMON VVVV37312S L04-47B70L0-L65
PC1973 3.3nF COMMON C0603 VVVV37312S C11-3322013-W08
FB_SNUBBER2
PR1389 2R2 COMMON VVVV37312S R11-022A017-W08 R1206_113
C967 47uF 4V 20% X6S 0805 COMMON
C923 47uF 4V 20% X6S 0805 COMMON
C872 47uF 4V 20% X6S 0805 COMMON
IN

MICRO-STAR INT'L CO.,LTD

MS-V373

Size	Document Description	Rev
Custom	Page33:PS_ FBVDD PHASE 1, 2	7.0

Date: Tuesday, August 21, 2018 | Sheet 33 of 54

PAGE 34: PS: NVVDD Controller OVR8

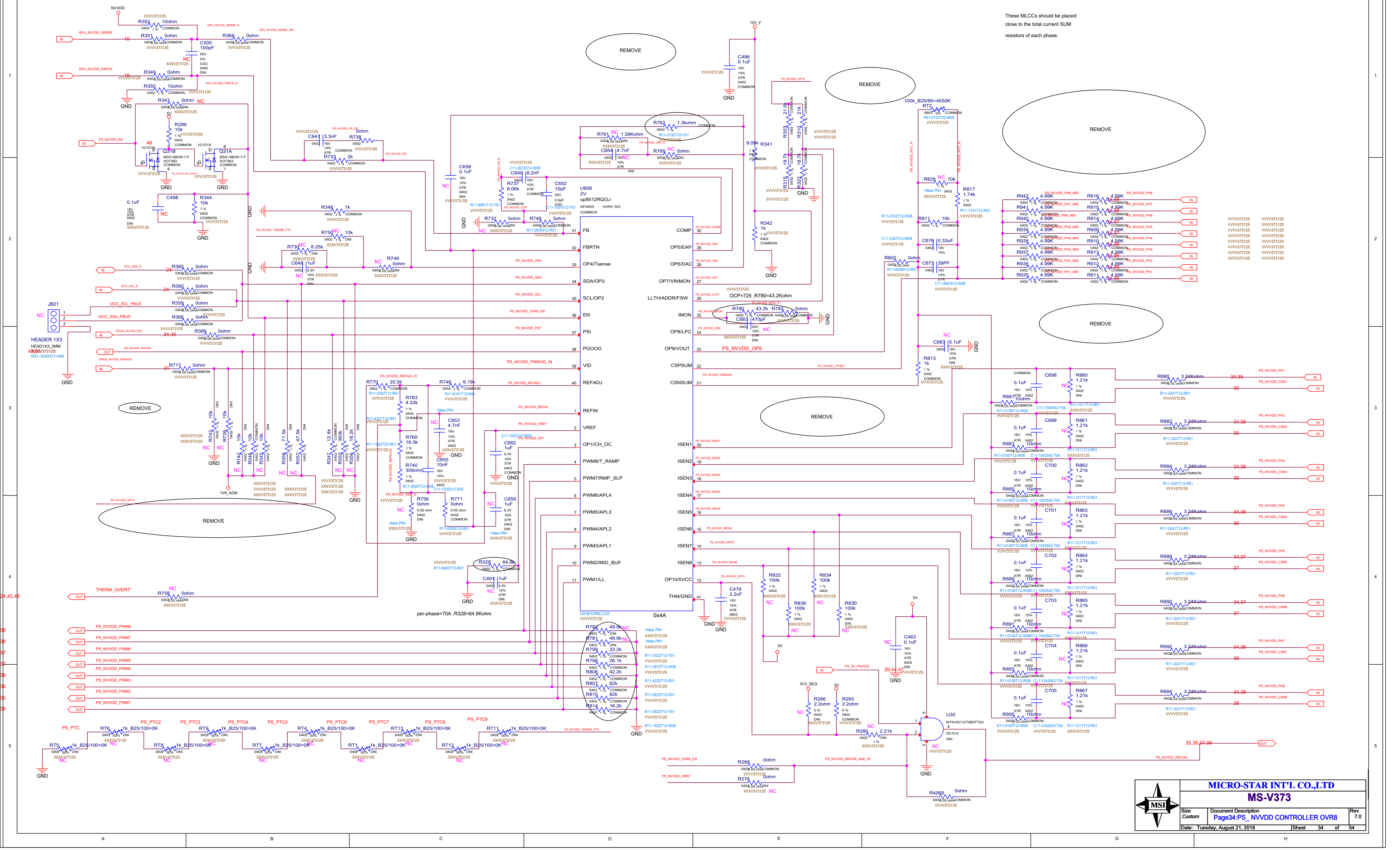
U606
up9512RQGJ
QFN5X5
OVR4+ 5X5
FB
FBRTN
OP4/Tsense
SDA/OP3
SCL/OP2
EN
PSI
PGOOD
VID
REFADJ
REFIN
VREF
OP1/CH_OC
PWM8/T_RAMP
PWM7/RMP_SLP
PWM6/APL4
PWM5/APL3
PWM4/APL2
PWM3/APL1
PWM2/MID_BUF
PWM1/LL
COMP
OP5/EAP
OP6/DAC
OP7/VINMON
LLTH/ADDR/FSW
IMON
OP8/LPC
OP9/VOUT
CSPSUM
CSNSUM
ISEN1
ISEN2
ISEN3
ISEN4
ISEN5
ISEN6
ISEN7
ISEN8
OP10/5VCC
THM/GND
0x4A
U30
M74VHC1G08DFT2G
SC70-5
J601
HEADER 1X3
HEAD1X3_2MM
NVVDD
12V_F
5V
3V3_SEQ
1V8_AON
GND
REMOVE
GPU_NVVDD_SENSE
GPU_NVVDD_FBRTN
PS_NVVDD_EN
I2CC_SDA_R
I2CC_SCL_R
I2CB_SCL_PBUS
I2CB_SDA_PBUS
PS_NVVDD_PGOOD
THERM_OVERT*
PS_NVVDD_PWM8
PS_NVVDD_PWM7
PS_NVVDD_PWM6
PS_NVVDD_PWM5
PS_NVVDD_PWM4
PS_NVVDD_PWM3
PS_NVVDD_PWM2
PS_NVVDD_PWM1
PS_PTC
PS_PTC2
PS_PTC3
PS_PTC4
PS_PTC5
PS_PTC6
PS_PTC7
PS_PTC8
PS_PTC9
PS_NVVDD_OP9
PS_NVVDD_DRVON
PS_5V_PGOOD
PS_NVVDD_OVR8_EN
PS_NVVDD_VREF
PS_NVVDD_PH1
PS_NVVDD_PH2
PS_NVVDD_PH3
PS_NVVDD_PH4
PS_NVVDD_PH5
PS_NVVDD_PH6
PS_NVVDD_PH7
PS_NVVDD_PH8
PS_NVVDD_CSN1
PS_NVVDD_CSN2
PS_NVVDD_CSN3
PS_NVVDD_CSN4
PS_NVVDD_CSN5
PS_NVVDD_CSN6
PS_NVVDD_CSN7
PS_NVVDD_CSN8
100k_B25/85=4550K
RT2

These MLCCs should be placed close to the total current SUM resistors of each phase.

OCP=725 ,R780=43.2Kohm

per-phase=70A ,R328=64.9Kohm

MICRO-STAR INT'L CO.,LTD

MS-V373

Size	Document Description	Rev
Custom	Page34:PS_ NVVDD CONTROLLER OVR8	7.0

Date: Tuesday, August 21, 2018 Sheet 34 of 54

PAGE 35: PS: NVVDD Phase 1, 2

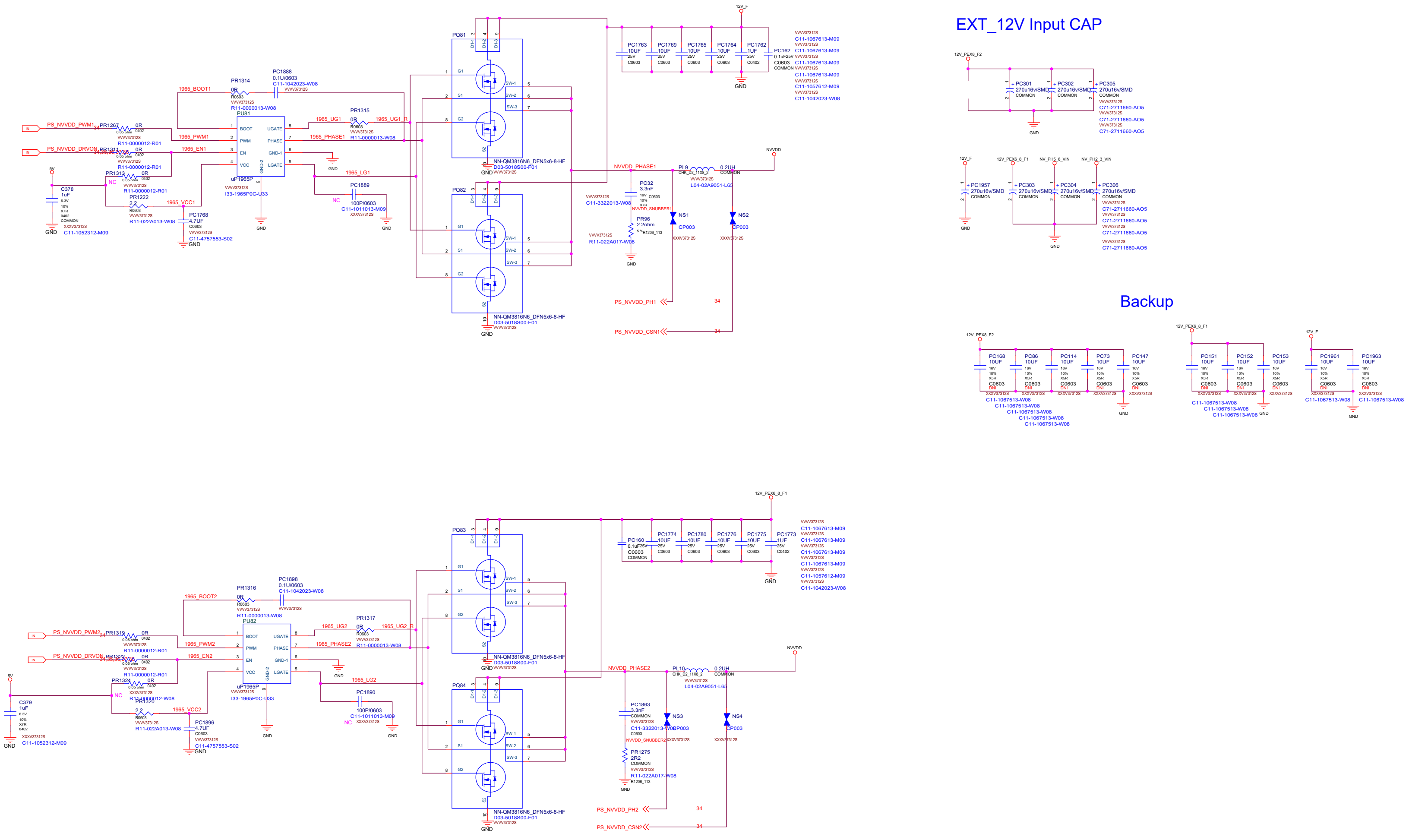

EXT_12V Input CAP
Backup
12V_F
PC1763 10UF 25V C0603
PC1769 10UF 25V C0603
PC1765 10UF 25V C0603
PC1764 10UF 25V C0603
PC1762 1UF 25V C0402
PC162 0.1uF25V C0603 COMMON
C11-1067613-M09
C11-1057612-M09
C11-1042023-W08
GND
PQ81
PQ82
PQ83
PQ84
G1
S1
G2
SW-1
SW-2
SW-3
NN-QM3816N6_DFN5x6-8-HF
D03-5018S00-F01
PU81
PU82
uP1965P
I33-1965P0C-U33
BOOT
PWM
EN
VCC
UGATE
PHASE
GND-1
LGATE
GND-2
PR1314 0R R0603 R11-0000013-W08
PC1888 0.1U/0603 C11-1042023-W08
1965_BOOT1
PR1315 0R R0603 R11-0000013-W08
1965_UG1
1965_UG1_R
1965_PHASE1
1965_PWM1
1965_EN1
1965_LG1
1965_VCC1
PS_NVVDD_PWM1
PS_NVVDD_DRVON
PR1267 0R 0402 R11-0000012-R01
PR1311 0R 0402 R11-0000012-R01
PR1312 0R 0402 R11-0000012-R01
PR1222 2.2 R0603 R11-022A013-W08
PC1768 4.7UF C0603 C11-4757553-S02
C378 1uF 6.3V 10% X7R 0402 COMMON C11-1052312-M09
PC1889 100P/0603 C11-1011013-M09
NC
5V
NVVDD_PHASE1
PL9 0.2UH CHK_D2_1130_2 COMMON L04-02A9051-L65
NVVDD
PC32 3.3nF 16V C0603 10% X7R C11-3322013-W08
NVVDD_SNUBBER1
PR96 2.2ohm R1206_113 R11-022A017-W08
NS1 CP003
NS2 CP003
PS_NVVDD_PH1
PS_NVVDD_CSN1
34
12V_PEX8_F2
PC301 270u16v/SMD COMMON
PC302 270u16v/SMD COMMON
PC305 270u16v/SMD COMMON
C71-2711660-AO5
12V_PEX8_8_F1
NV_PH5_6_VIN
NV_PH2_3_VIN
PC1957 270u16v/SMD COMMON
PC303 270u16v/SMD COMMON
PC304 270u16v/SMD COMMON
PC306 270u16v/SMD COMMON
PC168 10UF
PC86 10UF
PC114 10UF
PC73 10UF
PC147 10UF
PC151 10UF
PC152 10UF
PC153 10UF
PC1961 10UF
PC1963 10UF
16V 10% X5R C0603 DNI
C11-1067513-W08
12V_PEX6_8_F1
PC160 0.1uF25V C0603 COMMON
PC1774 10UF 25V C0603
PC1780 10UF 25V C0603
PC1776 10UF 25V C0603
PC1775 10UF 25V C0603
PC1773 1UF 25V C0402
PR1316 0R R0603 R11-0000013-W08
PC1898 0.1U/0603 C11-1042023-W08
1965_BOOT2
PR1317 0R R0603 R11-0000013-W08
1965_UG2
1965_UG2_R
1965_PHASE2
1965_PWM2
1965_EN2
1965_LG2
1965_VCC2
PS_NVVDD_PWM2
PS_NVVDD_DRVON
PR1319 0R 0402 R11-0000012-R01
PR1322 0R 0402 R11-0000012-R01
PR1324 0R 0402 R11-0000012-W08
PR1320 2.2 R0603 R11-022A013-W08
PC1896 4.7UF C0603 C11-4757553-S02
C379 1uF 6.3V 10% X7R 0402 C11-1052312-M09
PC1890 100P/0603 C11-1011013-M09
NVVDD_PHASE2
PL10 0.2UH CHK_D2_1130_2 COMMON L04-02A9051-L65
PC1863 3.3nF COMMON C0603 C11-3322013-W08
NVVDD_SNUBBER2
PR1275 2R2 COMMON R1206_113 R11-022A017-W08
NS3 CP003
NS4 CP003
PS_NVVDD_PH2
PS_NVVDD_CSN2
VVV373125
XXXV373125

MICRO-STAR INT'L CO.,LTD

MS-V373

Size D

Document Description Page35:PS_ NVVDD Phase 1, 2

Rev 7.0

Date: Tuesday, August 21, 2018 Sheet 35 of 54

PAGE 36: PS: NVVDD Phase 3, 4

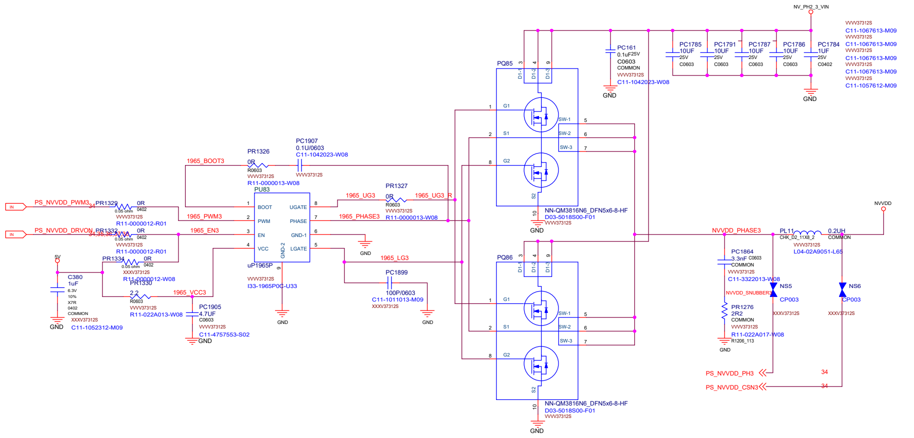
PS_NVVDD_PWM3
34
PR1329
0R
0.05 ohm
0402
VVVV37312S
R11-0000012-R01
PS_NVVDD_DRVON
34,35,36,37,38
PR1332
0R
0.05 ohm
0402
VVVV37312S
R11-0000012-R01
IN
IN
5V
C380
1uF
6.3V
10%
X7R
0402
COMMON
XXXV37312S
C11-1052312-M09
GND
PR1334
0R
0.05 ohm
0402
XXXV37312S
R11-0000012-W08
PR1330
2.2
R0603
VVVV37312S
R11-022A013-W08
1965_VCC3
PC1905
4.7UF
C0603
VVVV37312S
C11-4757553-S02
GND
1965_BOOT3
1965_PWM3
1965_EN3
PR1326
0R
R0603
VVVV37312S
R11-0000013-W08
PC1907
0.1U/0603
C11-1042023-W08
VVVV37312S
PU83
BOOT
PWM
EN
VCC
UGATE
PHASE
GND-1
LGATE
GND-2
uP1965P
VVVV37312S
I33-1965P0C-U33
GND
1965_UG3
PR1327
0R
R0603
VVVV37312S
R11-0000013-W08
1965_UG3_R
1965_PHASE3
1965_LG3
GND
PC1899
100P/0603
C11-1011013-M09
XXXV37312S
GND
PQ85
D1-1
D1-2
D1-3
G1
S1
G2
S2
SW-1
SW-2
SW-3
NN-QM3816N6_DFN5x6-8-HF
D03-5018S00-F01
VVVV37312S
GND
PQ86
NN-QM3816N6_DFN5x6-8-HF
D03-5018S00-F01
VVVV37312S
GND
PC161
0.1uF
25V
C0603
COMMON
VVVV37312S
C11-1042023-W08
GND
NV_PH2_3_VIN
PC1785
10UF
25V
C0603
PC1791
10UF
25V
C0603
PC1787
10UF
25V
C0603
PC1786
10UF
25V
C0603
PC1784
1UF
25V
C0402
GND
VVVV37312S
C11-1067613-M09
VVVV37312S
C11-1067613-M09
VVVV37312S
C11-1067613-M09
VVVV37312S
C11-1067613-M09
VVVV37312S
C11-1057612-M09
NVVDD_PHASE3
PL11
CHK_D2_11X8_2
0.2UH
COMMON
VVVV37312S
L04-02A9051-L65
NVVDD
PC1864
3.3nF
C0603
COMMON
VVVV37312S
C11-3322013-W08
NVVDD_SNUBBER3
PR1276
2R2
COMMON
VVVV37312S
R11-022A017-W08
R1206_113
GND
NS5
CP003
XXXV37312S
NS6
CP003
XXXV37312S
PS_NVVDD_PH3
34
PS_NVVDD_CSN3
34

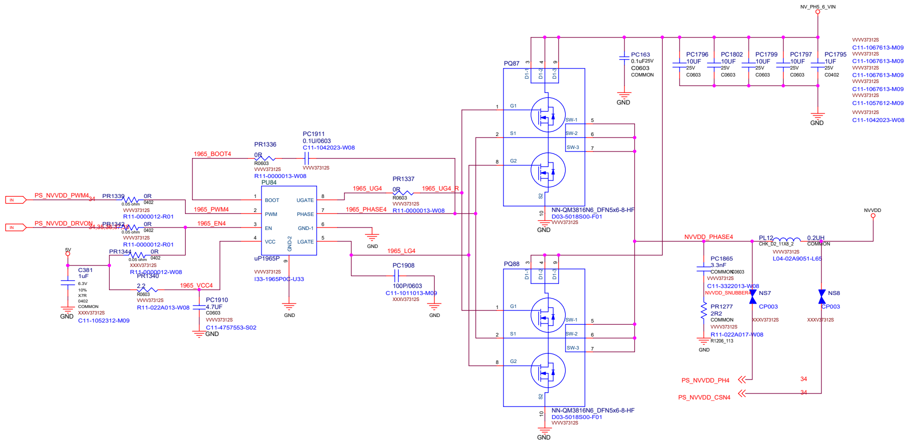
PS_NVVDD_PWM4
34
PR1339
0R
0.05 ohm
0402
VVVV37312S
R11-0000012-R01
PS_NVVDD_DRVON
34,35,36,37,38
PR1342
0R
0.05 ohm
0402
VVVV37312S
R11-0000012-R01
IN
IN
5V
C381
1uF
6.3V
10%
X7R
0402
COMMON
XXXV37312S
C11-1052312-M09
GND
PR1344
0R
0.05 ohm
0402
XXXV37312S
R11-0000012-W08
PR1340
2.2
R0603
VVVV37312S
R11-022A013-W08
1965_VCC4
PC1910
4.7UF
C0603
VVVV37312S
C11-4757553-S02
GND
1965_BOOT4
1965_PWM4
1965_EN4
PR1336
0R
R0603
VVVV37312S
R11-0000013-W08
PC1911
0.1U/0603
C11-1042023-W08
VVVV37312S
PU84
BOOT
PWM
EN
VCC
UGATE
PHASE
GND-1
LGATE
GND-2
uP1965P
VVVV37312S
I33-1965P0C-U33
GND
1965_UG4
PR1337
0R
R0603
VVVV37312S
R11-0000013-W08
1965_UG4_R
1965_PHASE4
1965_LG4
GND
PC1908
100P/0603
C11-1011013-M09
XXXV37312S
GND
PQ87
D1-1
D1-2
D1-3
G1
S1
G2
S2
SW-1
SW-2
SW-3
NN-QM3816N6_DFN5x6-8-HF
D03-5018S00-F01
VVVV37312S
GND
PQ88
NN-QM3816N6_DFN5x6-8-HF
D03-5018S00-F01
VVVV37312S
GND
PC163
0.1uF
25V
C0603
COMMON
GND
NV_PH5_6_VIN
PC1796
10UF
25V
C0603
PC1802
10UF
25V
C0603
PC1799
10UF
25V
C0603
PC1797
10UF
25V
C0603
PC1795
1UF
25V
C0402
GND
VVVV37312S
C11-1067613-M09
VVVV37312S
C11-1067613-M09
VVVV37312S
C11-1067613-M09
VVVV37312S
C11-1067613-M09
VVVV37312S
C11-1057612-M09
VVVV37312S
C11-1042023-W08
NVVDD_PHASE4
PL12
CHK_D2_11X8_2
0.2UH
COMMON
VVVV37312S
L04-02A9051-L65
NVVDD
PC1865
3.3nF
COMMON
C0603
VVVV37312S
C11-3322013-W08
NVVDD_SNUBBER4
PR1277
2R2
COMMON
VVVV37312S
R11-022A017-W08
R1206_113
GND
NS7
CP003
XXXV37312S
NS8
CP003
XXXV37312S
PS_NVVDD_PH4
34
PS_NVVDD_CSN4
34

MICRO-STAR INT'L CO.,LTD

MS-V373

Size	Document Description	Rev
D	Page36:PS_ NVVDD Phase 3, 4	7.0

Date: Tuesday, August 21, 2018

PAGE 37: PS: NVVDD Phase 5, 6

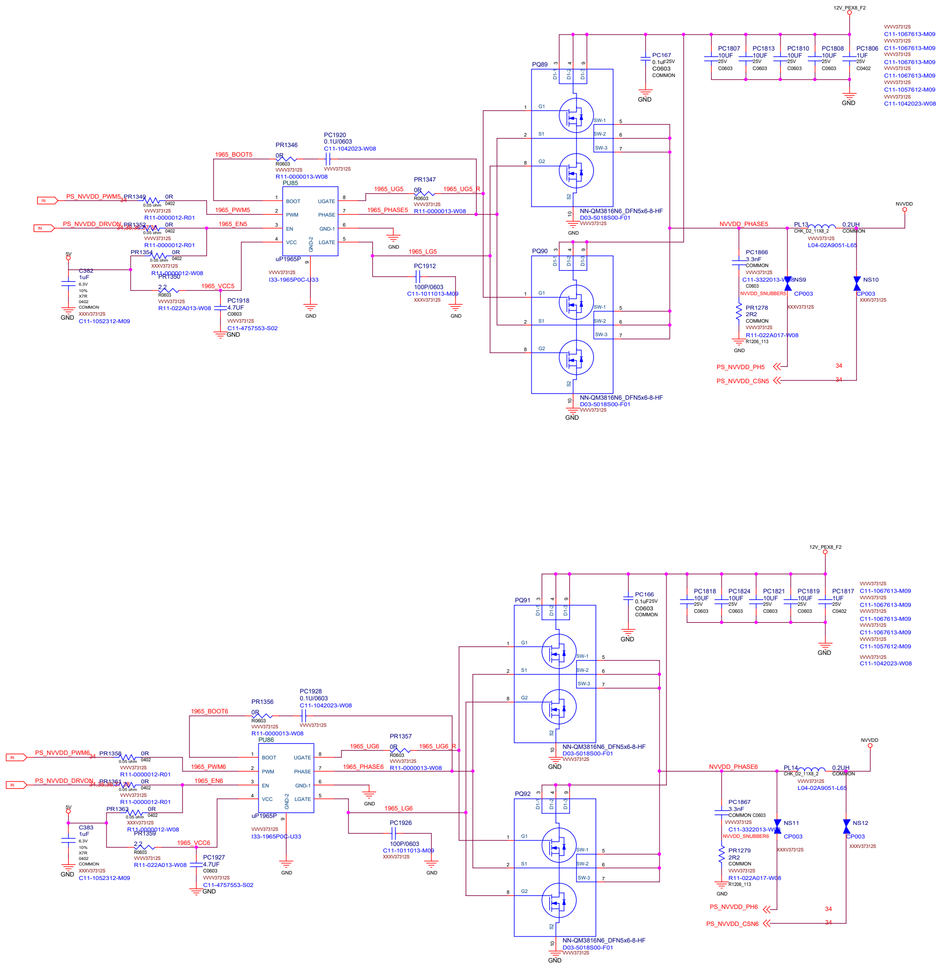

12V_PEX8_F2
PC167 0.1uF25V C0603 COMMON
PC1807 10UF 25V C0603
PC1813 10UF 25V C0603
PC1810 10UF 25V C0603
PC1808 10UF 25V C0603
PC1806 1UF 25V C0402
C11-1067613-M09
C11-1057612-M09
C11-1042023-W08
GND
PQ89
PQ90
NN-QM3816N6_DFN5x6-8-HF
D03-5018S00-F01
G1
S1
G2
S2
SW-1
SW-2
SW-3
PC1920 0.1U/0603 C11-1042023-W08
PR1346 0R R0603 R11-0000013-W08
1965_BOOT5
PS_NVVDD_PWM5
PS_NVVDD_DRVON
PR1349 0R
PR1352 0R
R11-0000012-R01
1965_PWM5
1965_EN5
PU85
uP1965P
I33-1965P0C-U33
BOOT
PWM
EN
VCC
UGATE
PHASE
GND-1
LGATE
GND-2
PR1347 0R R0603 R11-0000013-W08
1965_UG5
1965_UG5_R
1965_PHASE5
1965_LG5
PC1912 100P/0603 C11-1011013-M09
PR1354 0R
PR1350 2.2 R11-022A013-W08
1965_VCC5
5V
C382 1uF 6.3V 10% X7R 0402 COMMON C11-1052312-M09
PC1918 4.7UF C0603 C11-4757553-S02
NVVDD_PHASE5
PL13 CHK_D2_11X8_2 0.2UH COMMON L04-02A9051-L65
NVVDD
PC1866 3.3nF COMMON C0603 C11-3322013-W
NVVDD_SNUBBER5
PR1278 2R2 COMMON R11-022A017-W08 R1206_113
NS9 CP003
NS10 CP003
PS_NVVDD_PH5
PS_NVVDD_CSN5
34
PC166 0.1uF25V C0603 COMMON
PC1818 10UF 25V C0603
PC1824 10UF 25V C0603
PC1821 10UF 25V C0603
PC1819 10UF 25V C0603
PC1817 1UF 25V C0402
PQ91
PQ92
PC1928 0.1U/0603 C11-1042023-W08
PR1356 0R R0603 R11-0000013-W08
1965_BOOT6
PS_NVVDD_PWM6
PR1358 0R
PR1361 0R
1965_PWM6
1965_EN6
PU86
PR1357 0R R0603 R11-0000013-W08
1965_UG6
1965_UG6_R
1965_PHASE6
1965_LG6
PC1926 100P/0603 C11-1011013-M09
PR1363 0R
PR1359 2.2 R11-022A013-W08
1965_VCC6
C383 1uF 6.3V 10% X7R 0402 COMMON C11-1052312-M09
PC1927 4.7UF C0603 C11-4757553-S02
NVVDD_PHASE6
PL14 CHK_D2_11X8_2 0.2UH COMMON L04-02A9051-L65
PC1867 3.3nF COMMON C0603 C11-3322013-W
NVVDD_SNUBBER6
PR1279 2R2 COMMON R11-022A017-W08 R1206_113
NS11 CP003
NS12 CP003
PS_NVVDD_PH6
PS_NVVDD_CSN6
VVVV373125
XXXV373125

MICRO-STAR INT'L CO.,LTD

MS-V373

Size	Document Description	Rev
D	Page37:PS_ NVVDD Phase 5, 6	7.0

Date: Tuesday, August 21, 2018 Sheet 37 of 54

PAGE 38: PS:NVVDD Phase 7, 8

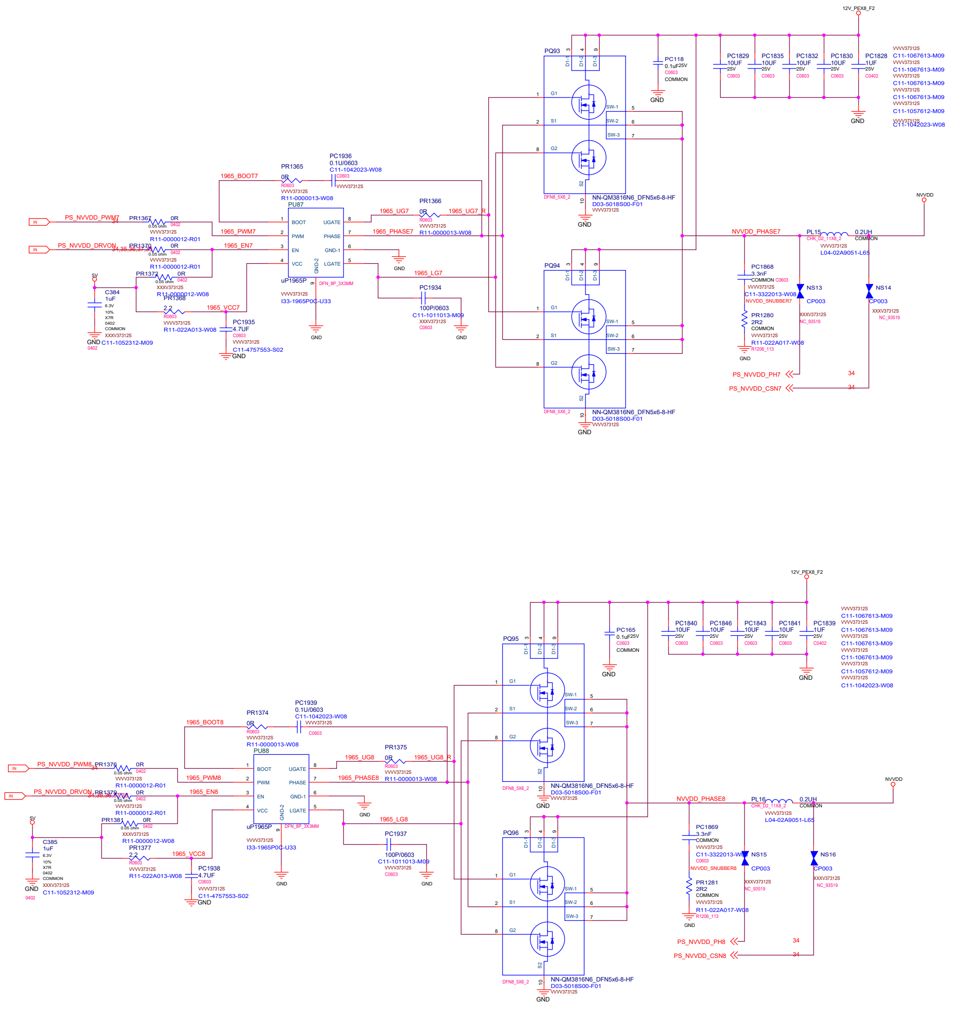
PS_NVVDD_PWM7
PS_NVVDD_DRVON
34,35,36,37,38
PR1367 0R 0.05 ohm 0402 R11-0000012-R01
PR1370 0R 0.05 ohm 0402 R11-0000012-R01
PR1372 0R 0.05 ohm 0402 R11-0000012-W08
PR1368 2.2 R0603 R11-022A013-W08
5V
C384 1uF 6.3V 10% X7R 0402 COMMON C11-1052312-M09
GND
1965_BOOT7
PR1365 0R R0603 R11-0000013-W08
PC1936 0.1U/0603 C11-1042023-W08
PU87
BOOT
PWM
EN
VCC
UGATE
PHASE
GND-1
LGATE
GND-2
uP1965P
DFN_8P_3X3MM
I33-1965P0C-U33
1965_PWM7
1965_EN7
1965_VCC7
PC1935 4.7UF C0603 C11-4757553-S02
1965_UG7
1965_UG7_R
PR1366 0R R0603 R11-0000013-W08
1965_PHASE7
1965_LG7
PC1934 100P/0603 C11-1011013-M09
PQ93
PQ94
G1
S1
G2
S2
D1-1
D1-2
D1-3
SW-1
SW-2
SW-3
NN-QM3816N6_DFN5x6-8-HF
D03-5018S00-F01
DFN8_5X6_2
12V_PEX8_F2
PC118 0.1uF 25V C0603 COMMON
PC1829 10UF 25V C0603
PC1835 10UF 25V C0603
PC1832 10UF 25V C0603
PC1830 10UF 25V C0603
PC1828 1UF 25V C0402
C11-1067613-M09
C11-1057612-M09
C11-1042023-W08
VVVV37312S
XXXV37312S
NVVDD_PHASE7
PL15 0.2UH CHK_D2_11X8_2 COMMON L04-02A9051-L65
NVVDD
PC1868 3.3nF COMMON C0603 C11-3322013-W08
NVVDD_SNUBBER7
PR1280 2R2 COMMON R11-022A017-W08 R1206_113
NS13 CP003 NC_93519
NS14 CP003 NC_93519
PS_NVVDD_PH7
PS_NVVDD_CSN7
34
PS_NVVDD_PWM8
PR1376 0R R11-0000012-R01
PR1379 0R R11-0000012-R01
PR1381 0R R11-0000012-W08
PR1377 2.2 R11-022A013-W08
C385 1uF 6.3V 10% X7R 0402 COMMON C11-1052312-M09
1965_BOOT8
PR1374 0R R11-0000013-W08
PC1939 0.1U/0603 C11-1042023-W08
PU88
1965_PWM8
1965_EN8
1965_VCC8
PC1938 4.7UF C11-4757553-S02
1965_UG8
1965_UG8_R
PR1375 0R R11-0000013-W08
1965_PHASE8
1965_LG8
PC1937 100P/0603 C11-1011013-M09
PQ95
PQ96
PC165 0.1uF 25V C0603 COMMON
PC1840 10UF 25V
PC1846 10UF 25V
PC1843 10UF 25V
PC1841 10UF 25V
PC1839 1UF 25V
NVVDD_PHASE8
PL16 0.2UH COMMON L04-02A9051-L65
PC1869 3.3nF COMMON C11-3322013-W08
NVVDD_SNUBBER8
PR1281 2R2 COMMON R11-022A017-W08
NS15 CP003
NS16 CP003
PS_NVVDD_PH8
PS_NVVDD_CSN8
GND

NVVDD Output CAP

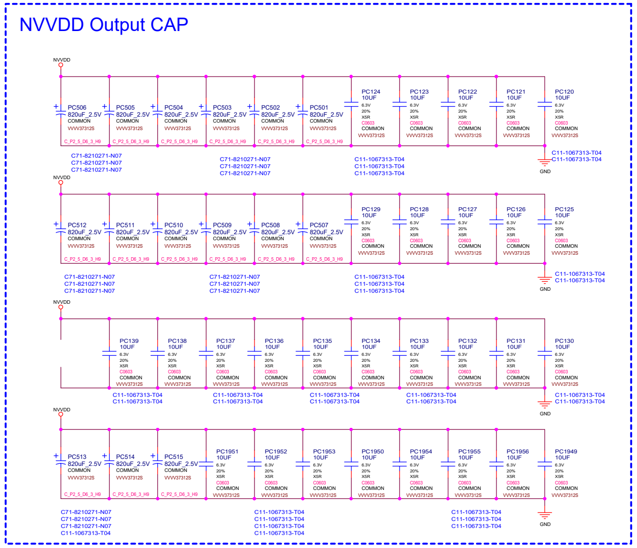
NVVDD
PC506 820uF_2.5V COMMON
PC505 820uF_2.5V COMMON
PC504 820uF_2.5V COMMON
PC503 820uF_2.5V COMMON
PC502 820uF_2.5V COMMON
PC501 820uF_2.5V COMMON
PC124 10UF 6.3V 20% X5R C0603 COMMON
PC123 10UF
PC122 10UF
PC121 10UF
PC120 10UF
C_P2_5_D6_3_H9
C71-8210271-N07
C11-1067313-T04
PC512 820uF_2.5V
PC511 820uF_2.5V
PC510 820uF_2.5V
PC509 820uF_2.5V
PC508 820uF_2.5V
PC507 820uF_2.5V
PC129 10UF
PC128 10UF
PC127 10UF
PC126 10UF
PC125 10UF
PC139 10UF
PC138 10UF
PC137 10UF
PC136 10UF
PC135 10UF
PC134 10UF
PC133 10UF
PC132 10UF
PC131 10UF
PC130 10UF
PC513 820uF_2.5V
PC514 820uF_2.5V
PC515 820uF_2.5V
PC1951 10UF
PC1952 10UF
PC1953 10UF
PC1950 10UF
PC1954 10UF
PC1955 10UF
PC1956 10UF
PC1949 10UF
VVVV37312S
GND

MICRO-STAR INT'L CO.,LTD
MS-V373
Size D
Document Description: Page38:PS_ NVVDD Phase 7, 8
Rev 7.0
Date: Tuesday, August 21, 2018
Sheet 38 of 54

PAGE 39: PS: INPUT SWITCH RTD3

AND GATE LOGIC FOR P-BOARD

GPIO1	GPIO29	SWITCH	VOUT
0	0	0	12V_F
0	1	0	12V_F
1	0	0	12V_F
1	1	1	3V3A

AND GATE LOGIC FOR P-BOARD

GPIO1	GPIO29	SWITCH	VOUT
0	0	0	3V3
0	1	0	3V3
1	0	0	3V3
1	1	1	3V3A

0727: remove

MSI

MICRO-STAR INT'L CO.,LTD

MS-V373

Size	Document Description	Rev
Custom	Page39:PS_ INPUT SWITCH RTD3	7.0

Date: Tuesday, August 21, 2018 Sheet 39 of 54

PAGE 40: PS: INPUT SWITCH RTD3 USB

0730: remove INA3221

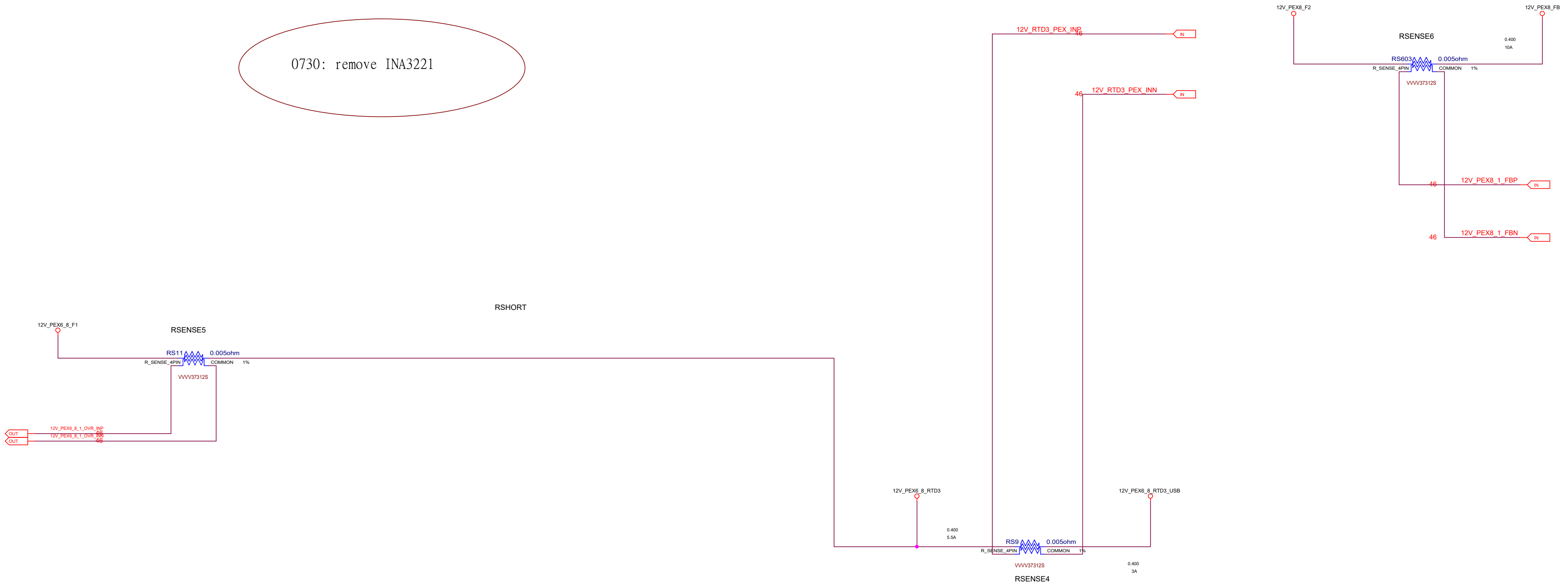
12V_RTD3_PEX_INP
46
IN
12V_RTD3_PEX_INN
46
IN
12V_PEX8_F2
12V_PEX8_FB
RSENSE6
0.400
10A
RS603
0.005ohm
R_SENSE_4PIN
COMMON
1%
VVVV37312S
46
12V_PEX8_1_FBP
IN
46
12V_PEX8_1_FBN
IN
RSHORT
12V_PEX6_8_F1
RSENSE5
RS11
0.005ohm
R_SENSE_4PIN
COMMON
1%
VVVV37312S
OUT
12V_PEX6_8_1_OVR_INP
46
OUT
12V_PEX6_8_1_OVR_INN
46
12V_PEX6_8_RTD3
0.400
5.5A
RS9
0.005ohm
R_SENSE_4PIN
COMMON
1%
VVVV37312S
RSENSE4
12V_PEX6_8_RTD3_USB
0.400
3A

0727: remove OVR-SWITCH==>U607

MICRO-STAR INT'L CO.,LTD

MS-V373

Size	Document Description	Rev
Custom	Page40:PS_ INPUT SWITCH RTD3 USB	7.0

Date: Tuesday, August 21, 2018

PAGE 41: PS: INPUT SWITCH Rail Balance

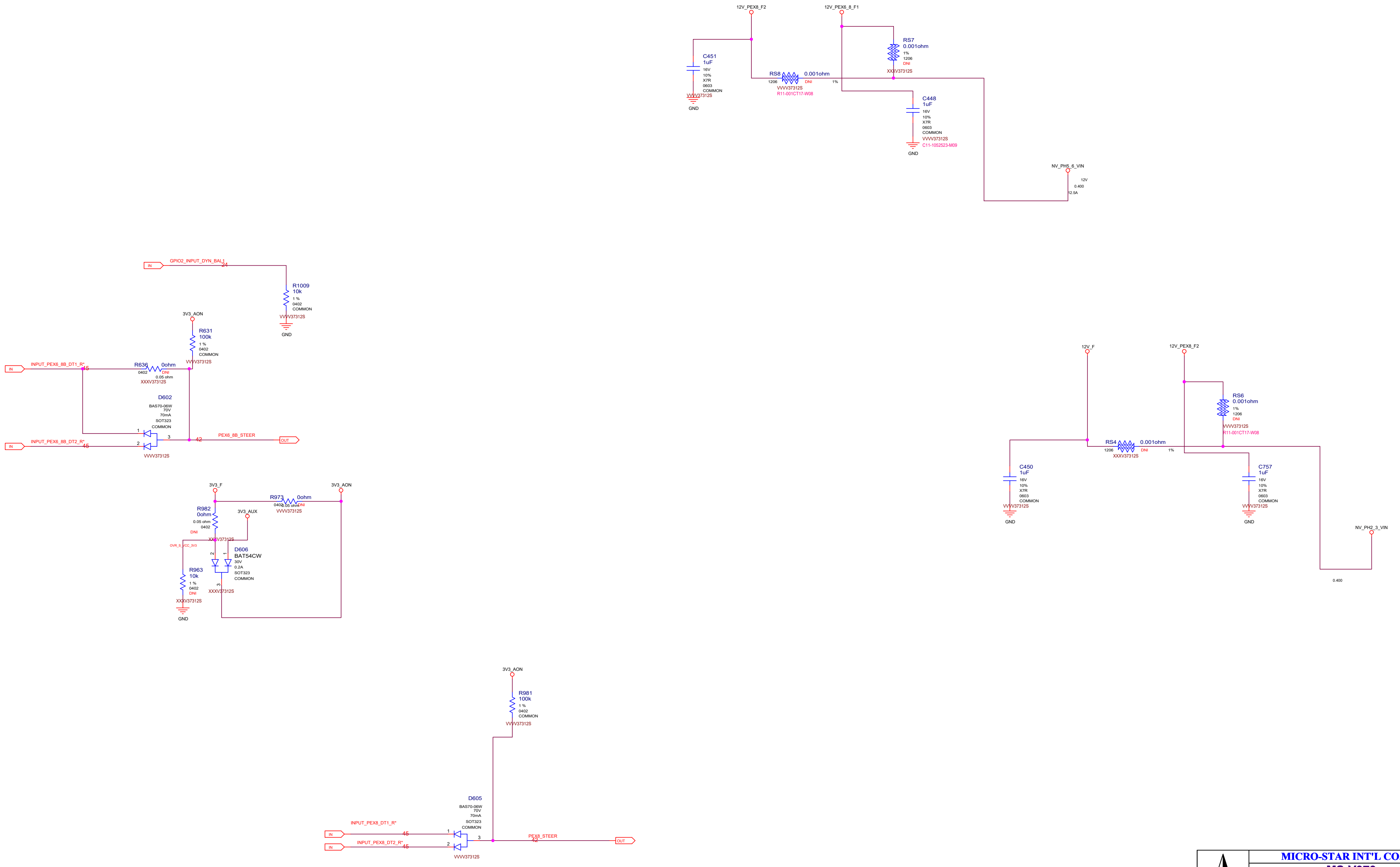
12V_PEX8_F2
12V_PEX6_8_F1
C451
1uF
16V
10%
X7R
0603
COMMON
VVVV37312S
GND
RS8
0.001ohm
1206
DNI
1%
VVVV37312S
R11-001CT17-W08
RS7
0.001ohm
1%
1206
DNI
XXXV37312S
C448
1uF
16V
10%
X7R
0603
COMMON
VVVV37312S
C11-1052523-M09
GND
NV_PH5_6_VIN
12V
0.400
12.5A
IN
GPIO2_INPUT_DYN_BAL1
24
R1009
10k
1 %
0402
COMMON
VVVV37312S
GND
3V3_AON
R631
100k
1 %
0402
COMMON
VVVV37312S
IN
INPUT_PEX6_8B_DT1_R*
45
R636
0ohm
0402
DNI
0.05 ohm
XXXV37312S
D602
BAS70-06W
70V
70mA
SOT323
COMMON
1
2
3
42
PEX6_8B_STEER
OUT
IN
INPUT_PEX6_8B_DT2_R*
45
VVVV37312S
3V3_F
3V3_AON
R973
0ohm
0402
0.05 ohm
DNI
VVVV37312S
R982
0ohm
0.05 ohm
0402
DNI
3V3_AUX
XXXV37312S
OVR_S_VCC_3V3
D606
BAT54CW
30V
0.2A
SOT323
COMMON
2
1
3
R963
10k
1 %
0402
DNI
XXXV37312S
XXXV37312S
GND
12V_F
12V_PEX8_F2
RS6
0.001ohm
1%
1206
DNI
VVVV37312S
R11-001CT17-W08
RS4
0.001ohm
1206
DNI
1%
XXXV37312S
C450
1uF
16V
10%
X7R
0603
COMMON
VVVV37312S
GND
C757
1uF
16V
10%
X7R
0603
COMMON
VVVV37312S
GND
NV_PH2_3_VIN
0.400
3V3_AON
R981
100k
1 %
0402
COMMON
VVVV37312S
D605
BAS70-06W
70V
70mA
SOT323
COMMON
INPUT_PEX8_DT1_R*
IN
45
1
INPUT_PEX8_DT2_R*
IN
45
2
3
PEX8_STEER
42
OUT
VVVV37312S

MICRO-STAR INT'L CO.,LTD

MS-V373

Size Custom
Document Description Page41:PS_ INPUT SWITCH RAIL BALA
Rev 7.0
Date: Tuesday, August 21, 2018
Sheet 41 of 54

PAGE 42: PS: 12V CURRENT STEERING

12V CURRENT STEERING (UNDER POWER BOOT):

GUIDES CURRENT FROM PEX EDGE TO PEX 6/8 PIN INPUT AREA

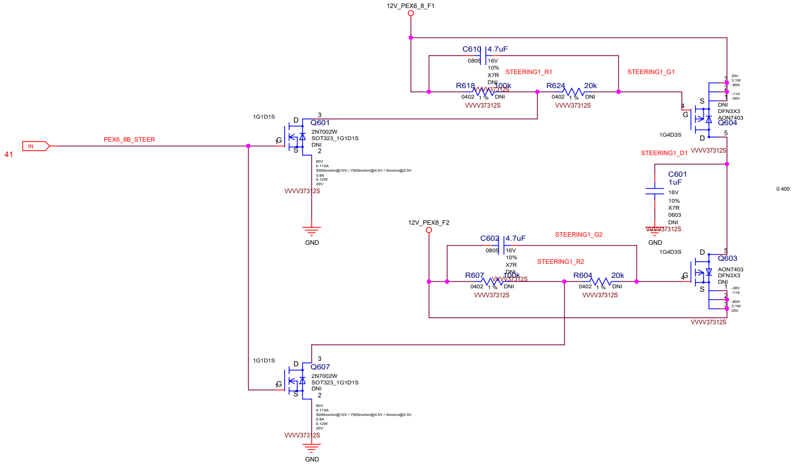
12V_PEX6_8_F1
C610 4.7uF 0805 16V 10% X7R DNI
STEERING1_R1
STEERING1_G1
R618 100k 0402 1 % DNI VVVV37312S
R624 20k 0402 1 % DNI VVVV37312S
Q604 AON7403 DFN3X3 DNI 1G4D3S
25V 3.1W -80A -11A -30V
VVVV37312S
STEERING1_D1
C601 1uF 16V 10% X7R 0603 DNI VVVV37312S
GND
0.400
41
IN
PEX6_8B_STEER
1G1D1S
Q601 2N7002W SOT323_1G1D1S DNI
60V 0.115A 5000mohm@10V / 7500mohm@4.5V / 0mohm@2.5V 0.8A 0.12W 20V
VVVV37312S
GND
12V_PEX8_F2
C602 4.7uF 0805 16V 10% X7R DNI
STEERING1_G2
STEERING1_R2
R607 100k 0402 1 % DNI VVVV37312S
R604 20k 0402 1 % DNI VVVV37312S
Q603 AON7403 DFN3X3 DNI 1G4D3S
-30V -11A -80A 3.1W 25V
VVVV37312S
1G1D1S
Q607 2N7002W SOT323_1G1D1S DNI
60V 0.115A 5000mohm@10V / 7500mohm@4.5V / 0mohm@2.5V 0.8A 0.12W 20V
VVVV37312S
GND

12V CURRENT STEERING (UNDER POWER BOOT):

GUIDES CURRENT FROM PEX EDGE TO PEX 8 PIN INPUT AREA

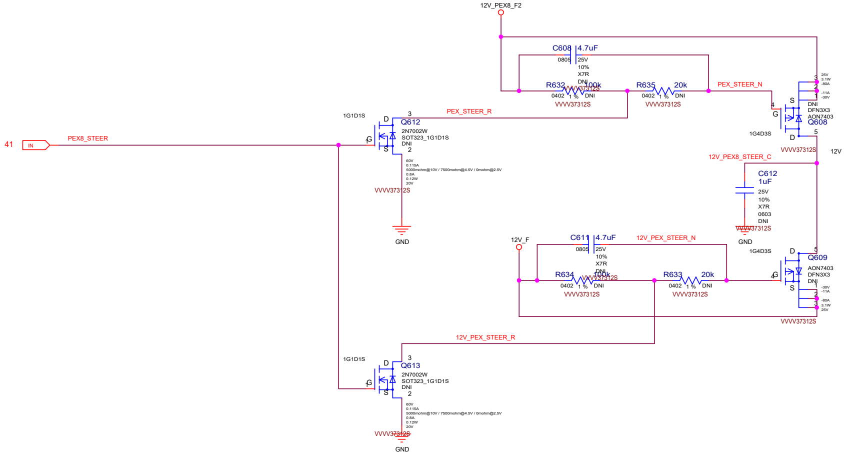
12V_PEX8_F2
C608 4.7uF 0805 25V 10% X7R DNI
R632 100k 0402 1 % DNI VVVV37312S
R635 20k 0402 1 % DNI VVVV37312S
PEX_STEER_N
Q608 AON7403 DFN3X3 DNI 1G4D3S
25V 3.1W -80A -11A -30V
VVVV37312S
12V
PEX_STEER_R
41
IN
PEX8_STEER
1G1D1S
Q612 2N7002W SOT323_1G1D1S DNI
60V 0.115A 5000mohm@10V / 7500mohm@4.5V / 0mohm@2.5V 0.8A 0.12W 20V
VVVV37312S
GND
12V_PEX8_STEER_C
C612 1uF 25V 10% X7R 0603 DNI VVVV37312S
GND
12V_F
C611 4.7uF 0805 25V 10% X7R DNI
12V_PEX_STEER_N
R634 100k 0402 1 % DNI VVVV37312S
R633 20k 0402 1 % DNI VVVV37312S
Q609 AON7403 DFN3X3 DNI 1G4D3S
-30V -11A -80A 3.1W 25V
VVVV37312S
12V_PEX_STEER_R
1G1D1S
Q613 2N7002W SOT323_1G1D1S DNI
60V 0.115A 5000mohm@10V / 7500mohm@4.5V / 0mohm@2.5V 0.8A 0.12W 20V
VVVV37312S
GND

MICRO-STAR INT'L CO.,LTD

MS-V373

Size	Document Description	Rev
Custom	Page42:PS_ 12V CURRENT STEERING	7.0

Date: Tuesday, August 21, 2018 Sheet 42 of 54

PAGE 43: PS: VR THERMAL PROTECTION

MICRO-STAR INT'L CO.,LTD

MS-V373

Size	Document Description	Rev
Custom	Page43:PS_ VR THERMAL PROTECTION	7.0

Date: Tuesday, August 21, 2018
Sheet 43 of 54

PAGE 44: PS: Inputs, Filtering, and Monitoring

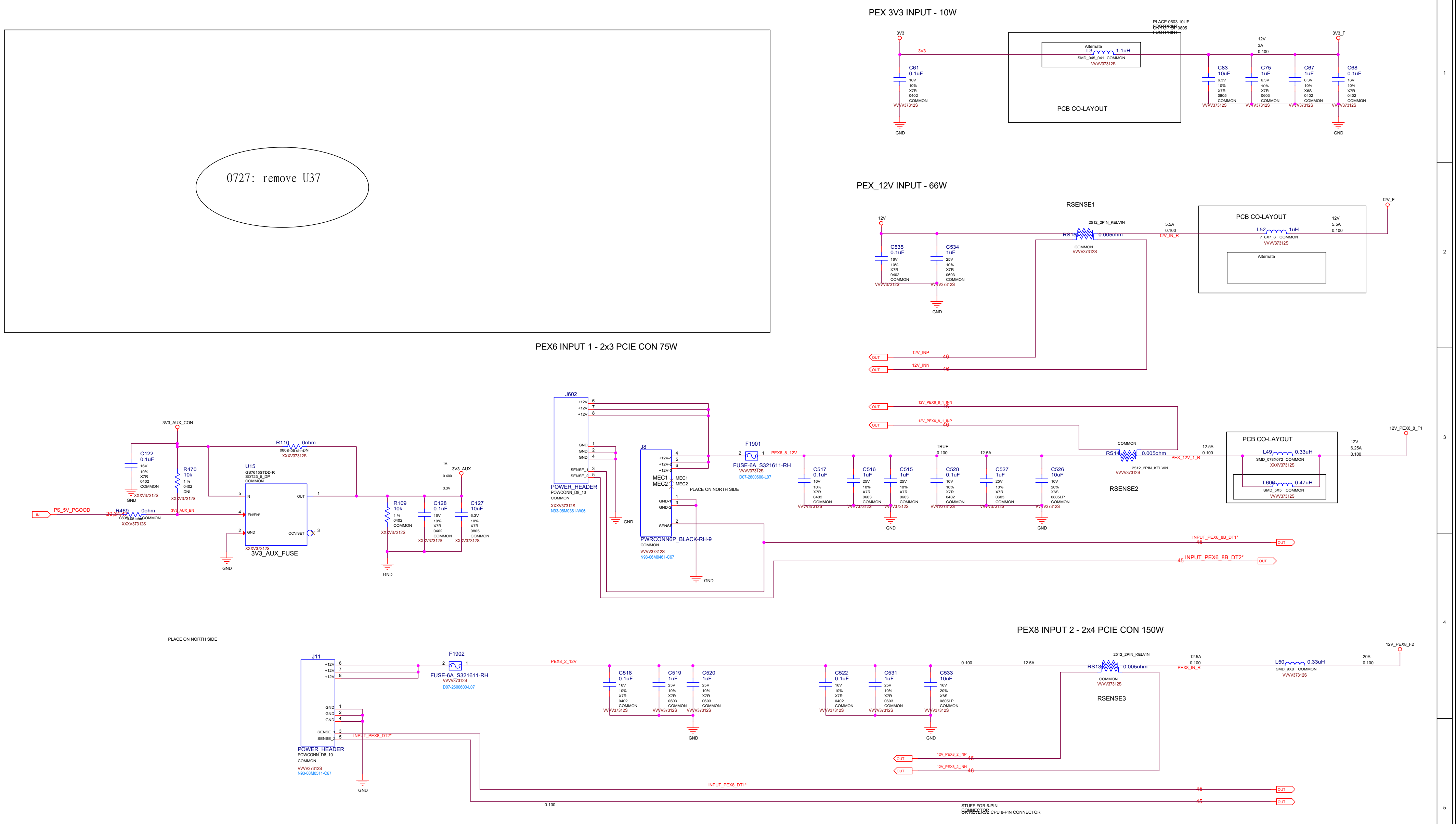
0727: remove U37
PEX 3V3 INPUT - 10W
3V3
C61 0.1uF 16V 10% X7R 0402 COMMON VVVV37312S
GND
PLACE 0603 10UF FOOTPRINT ON TOP OF 0805 FOOTPRINT
Alternate
L3 1.1uH SMD_045_041 COMMON VVVV37312S
PCB CO-LAYOUT
12V 3A 0.100
3V3_F
C83 10uF 6.3V 10% X7R 0805 COMMON VVVV37312S
C75 1uF 6.3V 10% X7R 0603 COMMON VVVV37312S
C67 1uF 6.3V 10% X6S 0402 COMMON VVVV37312S
C68 0.1uF 16V 10% X7R 0402 COMMON VVVV37312S
PEX_12V INPUT - 66W
RSENSE1
12V
2512_2PIN_KELVIN
RS15 0.005ohm COMMON VVVV37312S
5.5A 0.100
12V_IN_R
C535 0.1uF 16V 10% X7R 0402 COMMON VVVV37312S
C534 1uF 25V 10% X7R 0603 COMMON VVVV37312S
PCB CO-LAYOUT
12V 5.5A 0.100
L52 1uH 7_6X7_6 COMMON VVVV37312S
Alternate
12V_F
OUT 12V_INP 46
OUT 12V_INN 46
PEX6 INPUT 1 - 2x3 PCIE CON 75W
OUT 12V_PEX6_8_1_INN 46
OUT 12V_PEX6_8_1_INP 46
3V3_AUX_CON
C122 0.1uF 16V 10% X7R 0402 COMMON XXXV37312S
R470 10k 1 % 0402 DNI XXXV37312S
R110 0ohm 0805 0.05 ohm DNI XXXV37312S
U15 GS7615STDD-R SOT23_5_DP COMMON
5 IN
OUT 1
4 EN/EN*
2 GND
OC*/ISET 3
XXXV37312S
3V3_AUX_FUSE
IN PS_5V_PGOOD 29,34,47
R469 0ohm 0805 0.05 ohm COMMON XXXV37312S
3V3_AUX_EN
1A 0.400 3.3V 3V3_AUX
R109 10k 1 % 0402 COMMON XXXV37312S
C128 0.1uF 16V 10% X7R 0402 COMMON XXXV37312S
C127 10uF 6.3V 10% X7R 0805 COMMON XXXV37312S
J602
+12V 6
+12V 7
+12V 8
GND 1
GND 2
GND 4
SENSE_1 3
SENSE_2 5
POWER_HEADER POWCONN_D8_10 COMMON XXXV37312S N93-08M0361-W06
J8
+12V-1 4
+12V-2 5
+12V-3 6
MEC1 MEC2
GND-1 1
GND-2 3
SENSE 2
PLACE ON NORTH SIDE
PWRCONN6P_BLACK-RH-9 COMMON VVVV37312S N93-06M0461-C67
F1901
2 1
FUSE-6A_S321611-RH VVVV37312S D07-2600600-L07
PEX6_8_12V
TRUE 0.100 12.5A
C517 0.1uF 16V 10% X7R 0402 COMMON VVVV37312S
C516 1uF 25V 10% X7R 0603 COMMON VVVV37312S
C515 1uF 25V 10% X7R 0603 COMMON VVVV37312S
C528 0.1uF 16V 10% X7R 0402 COMMON VVVV37312S
C527 1uF 25V 10% X7R 0603 COMMON VVVV37312S
C526 10uF 16V 20% X6S 0805LP COMMON VVVV37312S
COMMON
RS14 0.005ohm 2512_2PIN_KELVIN VVVV37312S
PEX_12V_1_R
RSENSE2
12.5A 0.100
PCB CO-LAYOUT
L49 0.33uH SMD_078X072 COMMON XXXV37312S
L606 0.47uH SMD_5X5 COMMON VVVV37312S
12V 6.25A 0.100
12V_PEX6_8_F1
INPUT_PEX6_8B_DT1* 45 OUT
45 INPUT_PEX6_8B_DT2* OUT
PEX8 INPUT 2 - 2x4 PCIE CON 150W
PLACE ON NORTH SIDE
J11
+12V 6
+12V 7
+12V 8
GND 1
GND 2
GND 4
SENSE_1 3
SENSE_2 5
POWER_HEADER POWCONN_D8_10 COMMON VVVV37312S N93-08M0511-C67
F1902
2 1
FUSE-6A_S321611-RH VVVV37312S D07-2600600-L07
PEX8_2_12V
C518 0.1uF 16V 10% X7R 0402 COMMON VVVV37312S
C519 1uF 25V 10% X7R 0603 COMMON VVVV37312S
C520 1uF 25V 10% X7R 0603 COMMON VVVV37312S
C522 0.1uF 16V 10% X7R 0402 COMMON VVVV37312S
C531 1uF 25V 10% X7R 0603 COMMON VVVV37312S
C533 10uF 16V 20% X6S 0805LP COMMON VVVV37312S
0.100 12.5A
2512_2PIN_KELVIN
RS13 0.005ohm COMMON VVVV37312S
RSENSE3
12.5A 0.100
PEX8_IN_R
L50 0.33uH SMD_9X8 COMMON VVVV37312S
20A 0.100
12V_PEX8_F2
OUT 12V_PEX8_2_INP 46
OUT 12V_PEX8_2_INN 46
INPUT_PEX8_DT2*
INPUT_PEX8_DT1*
45 OUT
45 OUT
0.100
STUFF FOR 6-PIN CONNECTOR
OR REVERSE CPU 8-PIN CONNECTOR
GND

MSI
MICRO-STAR INT'L CO.,LTD
MS-V373

Size	Document Description	Rev
Custom	Page44:PS_ INPUTS, FILTERING AND	7.0

Date: Tuesday, August 21, 2018 | Sheet 44 of 54

PAGE 45: PS: Current Steering, Hot Unplug Detect

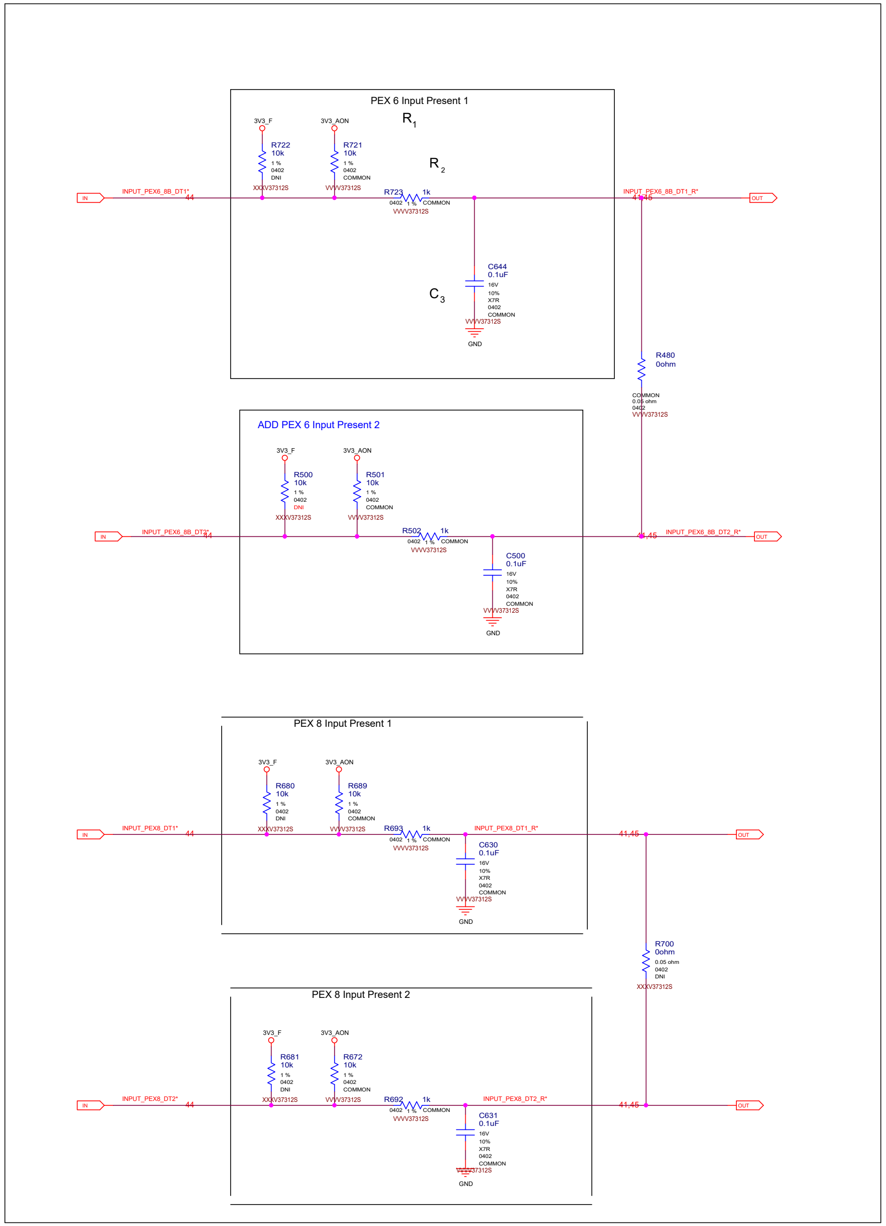
PEX 6 Input Present 1
R1
R2
C3
3V3_F
3V3_AON
R722 10k 1 % 0402 DNI XXXV37312S
R721 10k 1 % 0402 COMMON VVVV37312S
R723 1k 0402 1 % COMMON VVVV37312S
C644 0.1uF 16V 10% X7R 0402 COMMON VVVV37312S
GND
INPUT_PEX6_8B_DT1*
INPUT_PEX6_8B_DT1_R*
R480 0ohm COMMON 0.05 ohm 0402 VVVV37312S
ADD PEX 6 Input Present 2
R500 10k 1 % 0402 DNI XXXV37312S
R501 10k 1 % 0402 COMMON VVVV37312S
R502 1k 0402 1 % COMMON VVVV37312S
C500 0.1uF 16V 10% X7R 0402 COMMON VVVV37312S
INPUT_PEX6_8B_DT2*
INPUT_PEX6_8B_DT2_R*
PEX 8 Input Present 1
R680 10k 1 % 0402 DNI XXXV37312S
R689 10k 1 % 0402 COMMON VVVV37312S
R693 1k 0402 1 % COMMON VVVV37312S
C630 0.1uF 16V 10% X7R 0402 COMMON VVVV37312S
INPUT_PEX8_DT1*
INPUT_PEX8_DT1_R*
R700 0ohm 0.05 ohm 0402 DNI XXXV37312S
PEX 8 Input Present 2
R681 10k 1 % 0402 DNI XXXV37312S
R672 10k 1 % 0402 COMMON VVVV37312S
R692 1k 0402 1 % COMMON VVVV37312S
C631 0.1uF 16V 10% X7R 0402 COMMON VVVV37312S
INPUT_PEX8_DT2*
INPUT_PEX8_DT2_R*
IN
OUT
44
41,45

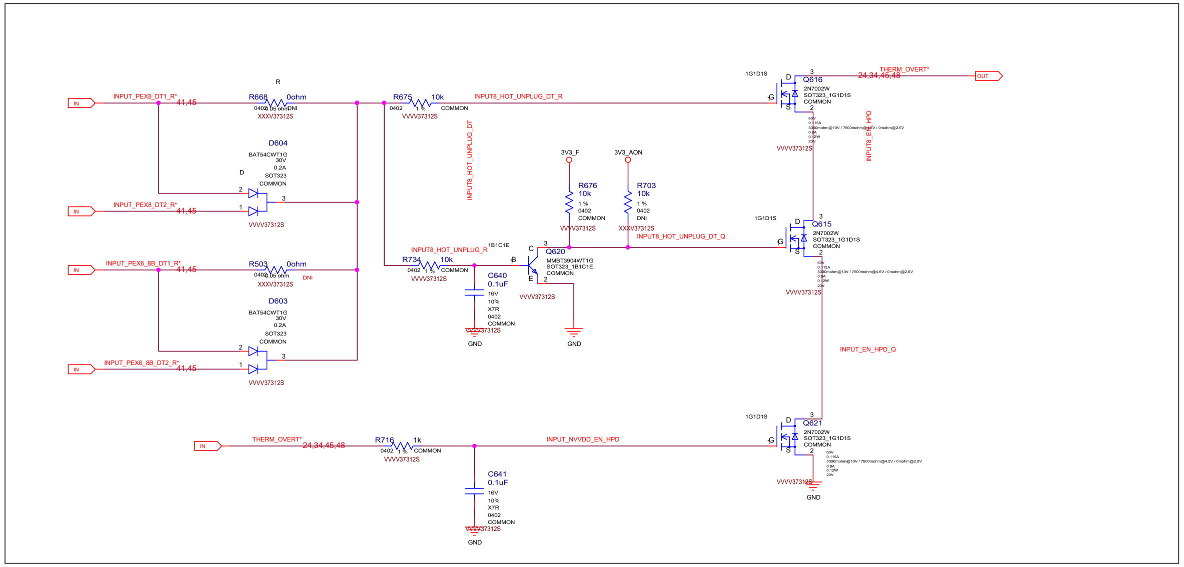
INPUT_PEX8_DT1_R*
INPUT_PEX8_DT2_R*
INPUT_PEX6_8B_DT1_R*
INPUT_PEX6_8B_DT2_R*
41,45
R668 0ohm 0402 0.05 ohm DNI XXXV37312S
R675 10k 0402 1 % COMMON VVVV37312S
INPUT8_HOT_UNPLUG_DT_R
INPUT8_HOT_UNPLUG_DT
D604 BAT54CWT1G 30V 0.2A SOT323 COMMON VVVV37312S
R503 0ohm 0402 0.05 ohm DNI XXXV37312S
D603 BAT54CWT1G 30V 0.2A SOT323 COMMON VVVV37312S
INPUT8_HOT_UNPLUG_R
R734 10k 0402 1 % COMMON VVVV37312S
C640 0.1uF 16V 10% X7R 0402 COMMON VVVV37312S
Q620 MMBT3904WT1G SOT323_1B1C1E COMMON VVVV37312S
3V3_F
3V3_AON
R676 10k 1 % 0402 COMMON VVVV37312S
R703 10k 1 % 0402 DNI XXXV37312S
INPUT8_HOT_UNPLUG_DT_Q
Q616 2N7002W SOT323_1G1D1S COMMON VVVV37312S
THERM_OVERT*
24,34,45,48
Q615 2N7002W SOT323_1G1D1S COMMON VVVV37312S
INPUT8_EN_HPD
INPUT_EN_HPD_Q
Q621 2N7002W SOT323_1G1D1S COMMON VVVV37312S
R716 1k 0402 1 % COMMON VVVV37312S
INPUT_NVVDD_EN_HPD
C641 0.1uF 16V 10% X7R 0402 COMMON VVVV37312S
GND
IN
OUT

PEX Input - Under Power Boot Controls

GPIO12_LOW_PERF*	GPU SPEED
0	Slow
1	Normal

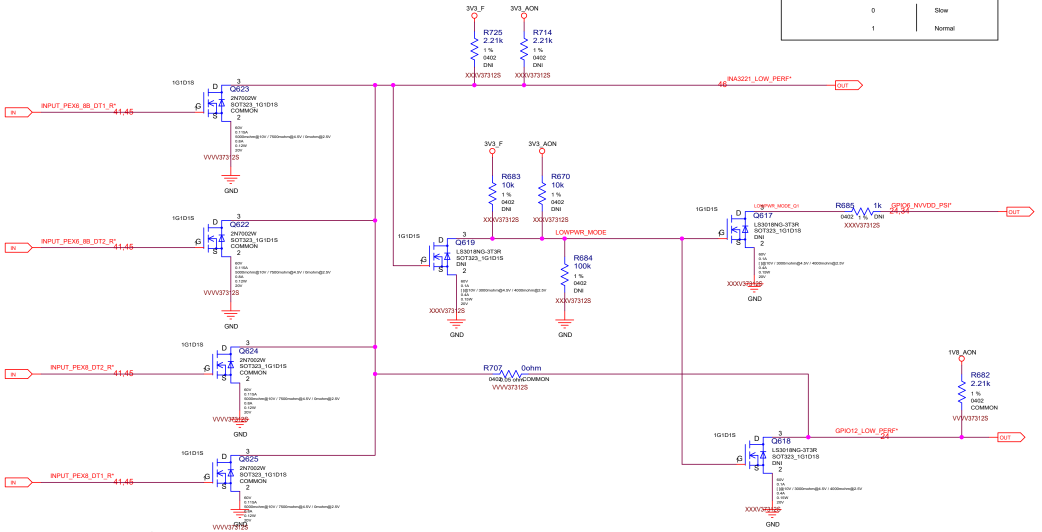
3V3_F
3V3_AON
R725 2.21k 1 % 0402 DNI XXXV37312S
R714 2.21k 1 % 0402 DNI XXXV37312S
INA3221_LOW_PERF*
46
Q623 2N7002W SOT323_1G1D1S COMMON VVVV37312S
INPUT_PEX6_8B_DT1_R*
Q622 2N7002W SOT323_1G1D1S COMMON VVVV37312S
INPUT_PEX6_8B_DT2_R*
Q624 2N7002W SOT323_1G1D1S COMMON VVVV37312S
INPUT_PEX8_DT2_R*
Q625 2N7002W SOT323_1G1D1S COMMON VVVV37312S
INPUT_PEX8_DT1_R*
41,45
R683 10k 1 % 0402 DNI XXXV37312S
R670 10k 1 % 0402 DNI XXXV37312S
Q619 LS3018NG-3T3R SOT323_1G1D1S DNI XXXV37312S
LOWPWR_MODE
R684 100k 1 % 0402 DNI XXXV37312S
Q617 LS3018NG-3T3R SOT323_1G1D1S DNI XXXV37312S
LOWPWR_MODE_Q1
R685 1k 0402 1 % DNI XXXV37312S
GPIO6_NVVDD_PSI*
24,34
R707 0ohm 0402 0.05 ohm COMMON VVVV37312S
1V8_AON
R682 2.21k 1 % 0402 COMMON VVVV37312S
Q618 LS3018NG-3T3R SOT323_1G1D1S DNI XXXV37312S
GPIO12_LOW_PERF*
24
GND
IN
OUT

A 2 x 4 auxiliary power connector plug from the power supply unit must not use the 75 W sense coding (Sense1=Open and Sense0=Ground) to avoid end-user confusion.

MICRO-STAR INT'L CO.,LTD

MS-V373

Size: Custom
Document Description: Page45:PS_ CURRENT STEERING,HOT U
Rev: 7.0
Date: Tuesday, August 21, 2018
Sheet 45 of 54

PAGE46; PS: Pre-Filter

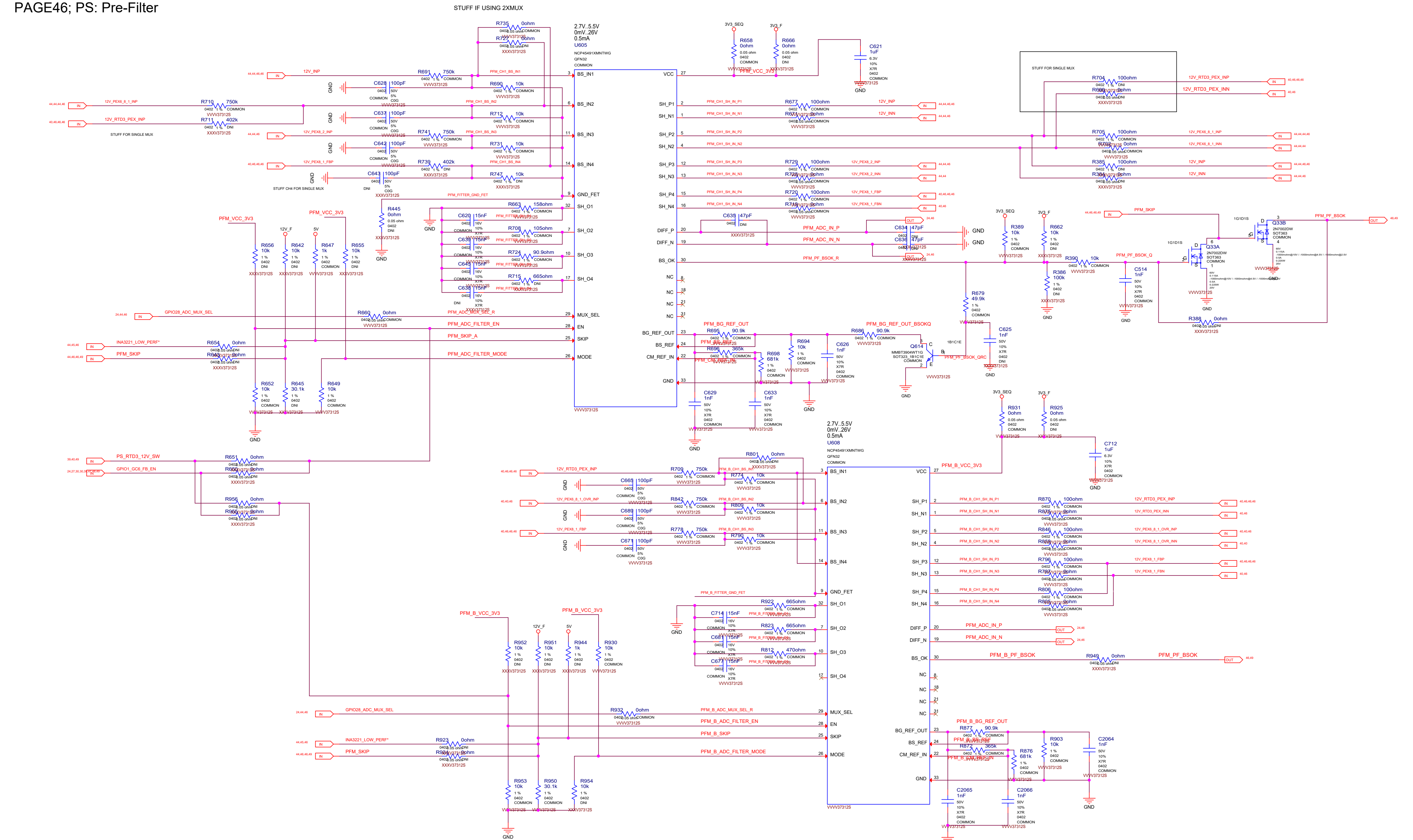
STUFF IF USING 2XMUX
2.7V..5.5V
0mV..26V
0.5mA
U605
NCP45491XMNTWG
QFN32
COMMON
BS_IN1
BS_IN2
BS_IN3
BS_IN4
GND_FET
SH_O1
SH_O2
SH_O3
SH_O4
MUX_SEL
EN
SKIP
MODE
VCC
SH_P1
SH_N1
SH_P2
SH_N2
SH_P3
SH_N3
SH_P4
SH_N4
DIFF_P
DIFF_N
BS_OK
NC
BG_REF_OUT
BS_REF
CM_REF_IN
GND
12V_INP
12V_PEX8_8_1_INP
12V_RTD3_PEX_INP
12V_PEX8_2_INP
12V_PEX8_1_FBP
STUFF FOR SINGLE MUX
STUFF CH4 FOR SINGLE MUX
PFM_VCC_3V3
PFM_CH1_BS_IN1
PFM_CH1_BS_IN2
PFM_CH1_BS_IN3
PFM_CH1_BS_IN4
PFM_FITTER_GND_FET
PFM_ADC_MUX_SEL_R
PFM_ADC_FILTER_EN
PFM_SKIP_A
PFM_ADC_FILTER_MODE
GPIO28_ADC_MUX_SEL
INA3221_LOW_PERF*
PFM_SKIP
PS_RTD3_12V_SW
GPIO1_GC6_FB_EN
3V3_SEQ
3V3_F
12V_F
5V
PFM_ADC_IN_P
PFM_ADC_IN_N
PFM_PF_BSOK_R
PFM_PF_BSOK_Q
PFM_PF_BSOK
PFM_BG_REF_OUT
PFM_BG_REF_OUT_BSOKQ
PFM_PF_BSOK_QRC
12V_RTD3_PEX_INN
12V_PEX8_8_1_INN
12V_INN
12V_PEX8_2_INN
12V_PEX8_1_FBN
Q614
MMBT3904WT1G
SOT323_1B1C1E
Q33A
Q33B
2N7002DW
SOT363
U608
PFM_B_VCC_3V3
12V_PEX8_1_OVR_INP
12V_PEX8_1_OVR_INN
PFM_B_CH1_BS_IN1
PFM_B_CH1_BS_IN2
PFM_B_CH1_BS_IN3
PFM_B_FITTER_GND_FET
PFM_B_ADC_MUX_SEL_R
PFM_B_ADC_FILTER_EN
PFM_B_SKIP
PFM_B_ADC_FILTER_MODE
PFM_B_PF_BSOK
PFM_B_BG_REF_OUT
R735 0ohm
R691 750k
R690 10k
C628 100pF
C637 100pF
C642 100pF
C643 100pF
R710 750k
R711 402k
R741 750k
R712 10k
R731 10k
R739 402k
R747 10k
R445 0ohm
R663 158ohm
C620 15nF
R708 105ohm
C639 15nF
R724 90.9ohm
C645 15nF
R715 665ohm
C638 15nF
R656 10k
R642 10k
R647 1k
R655 10k
R652 10k
R645 30.1k
R649 10k
R660 0ohm
R654 0ohm
R643 0ohm
R651 0ohm
R956 0ohm
R658 0ohm
R666 0ohm
C621 1uF
R677 100ohm
R671 0ohm
R729 100ohm
R720 100ohm
C635 47pF
C634 47pF
C636 47pF
R389 10k
R662 10k
R390 10k
R386 100k
C514 1nF
R679 49.9k
R695 90.9k
R696 365k
R698 681k
R694 10k
C626 1nF
R686 90.9k
C625 1nF
C629 1nF
C633 1nF
R704 100ohm
R705 100ohm
R385 100ohm
R388 0ohm
R931 0ohm
R925 0ohm
C712 1uF
R709 750k
R801 0ohm
R772 10k
R842 750k
R809 10k
R776 750k
R790 10k
C668 100pF
C689 100pF
C671 100pF
R922 665ohm
C714 15nF
R823 665ohm
C681 15nF
R812 470ohm
C673 15nF
R870 100ohm
R846 100ohm
R796 100ohm
R806 100ohm
R949 0ohm
R952 10k
R951 10k
R944 1k
R930 10k
R932 0ohm
R923 0ohm
R953 10k
R950 30.1k
R954 10k
R877 90.9k
R873 365k
R876 681k
R903 10k
C2064 1nF
C2065 1nF
C2066 1nF
IN
OUT
GND
DNI
COMMON
VVVV37312S
XXXV37312S

MICRO-STAR INT'L CO.,LTD		
MS-V373		
Size Custom	Document Description Page46:PS_ PRE-FILTER	Rev 7.0
Date: Tuesday, August 21, 2018	Sheet 46 of 54	

PAGE 47: SEQUENCE:5V,1V8,NV3V3 ENABLE

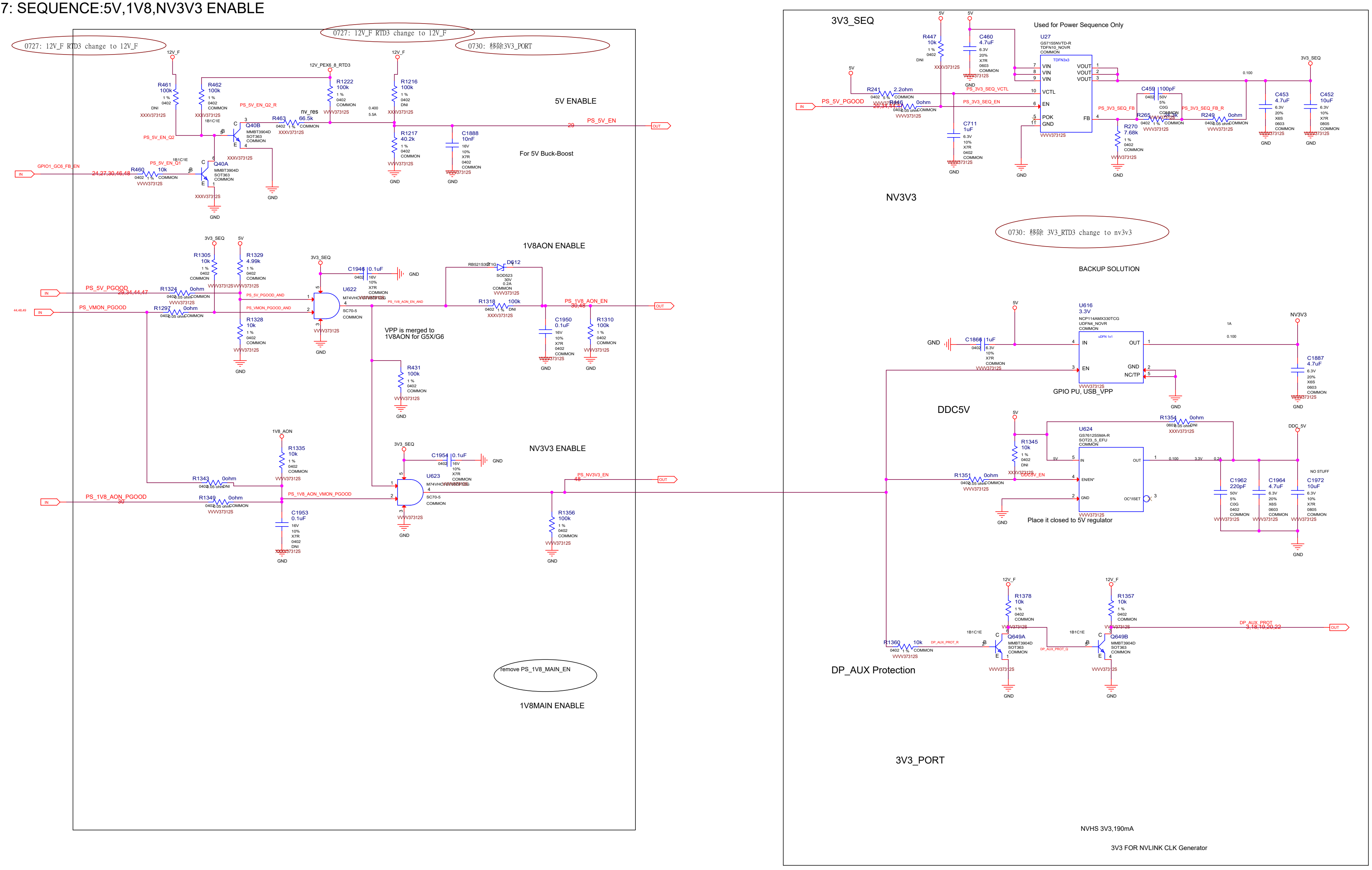
0727: 12V_F RTD3 change to 12V_F
0727: 12V_F RTD3 change to 12V_F
0730: 移除3V3_PORT
5V ENABLE
For 5V Buck-Boost
R461 100k
R462 100k
R1222 100k
R1216 100k
R1217 40.2k
C1888 10nF
R463 66.5k
R460 10k
Q40B MMBT3904D SOT363
Q40A MMBT3904D SOT363
12V_F
12V_PEX6_8_RTD3
nv_res
PS_5V_EN_Q2_R
PS_5V_EN_Q2
PS_5V_EN_Q1
GPIO1_GC6_FB_EN
24,27,30,46,48
PS_5V_EN
29
1V8AON ENABLE
R1305 10k
R1329 4.99k
R1328 10k
R1324 0ohm
R1297 0ohm
PS_5V_PGOOD
29,34,44,47
PS_VMON_PGOOD
PS_5V_PGOOD_AND
PS_VMON_PGOOD_AND
C1946 0.1uF
U622 M74VHC1GT08DTT1G
SC70-5
D612 RB521S30T1G SOD523
R1318 100k
PS_1V8_AON_EN_AND
PS_1V8_AON_EN
30,48
C1950 0.1uF
R1310 100k
VPP is merged to
1V8AON for G5X/G6
R431 100k
NV3V3 ENABLE
1V8_AON
R1335 10k
R1343 0ohm
R1349 0ohm
PS_1V8_AON_PGOOD
30
PS_1V8_AON_VMON_PGOOD
C1953 0.1uF
3V3_SEQ
C1954 0.1uF
U623 M74VHC1GT08DTT1G
PS_NV3V3_EN
48
R1356 100k
remove PS_1V8_MAIN_EN
1V8MAIN ENABLE
3V3_SEQ
Used for Power Sequence Only
U27 GS7155NVTD-R TDFN10_NOVR
R447 10k
C460 4.7uF
R241 2.2ohm
R445 0ohm
C711 1uF
PS_3V3_SEQ_VCTL
PS_3V3_SEQ_EN
PS_3V3_SEQ_FB
PS_3V3_SEQ_FB_R
C459 100pF
R265
R270 7.68k
R249 0ohm
C453 4.7uF
C452 10uF
NV3V3
0730: 移除 3V3_RTD3 change to nv3v3
BACKUP SOLUTION
U616 3.3V NCP114AMX330TCG UDFN4_NOVR
C1866 1uF
C1887 4.7uF
GPIO PU, USB_VPP
DDC5V
U624 G5761255MA-R SOT23_5_EFU
R1354 0ohm
R1345 10k
R1351 0ohm
DDC5V_EN
C1962 220pF
C1964 4.7uF
C1972 10uF
NO STUFF
DDC_5V
Place it closed to 5V regulator
R1378 10k
R1357 10k
R1360 10k
Q649A MMBT3904D SOT363
Q649B MMBT3904D SOT363
DP_AUX_PROT_R
DP_AUX_PROT_Q
DP_AUX_PROT
3,18,19,20,22
DP_AUX Protection
3V3_PORT
NVHS 3V3,190mA
3V3 FOR NVLINK CLK Generator

MICRO-STAR INT'L CO.,LTD

MS-V373

Size	Document Description	Rev
Custom	Page47:SEQUENCE_ 5V, 1V8, NV3V3 E	7.0

Date: Tuesday, August 21, 2018 | Sheet 47 of 54

PAGE 48: SEQUENCE:NV,PEX,FB ENABLE

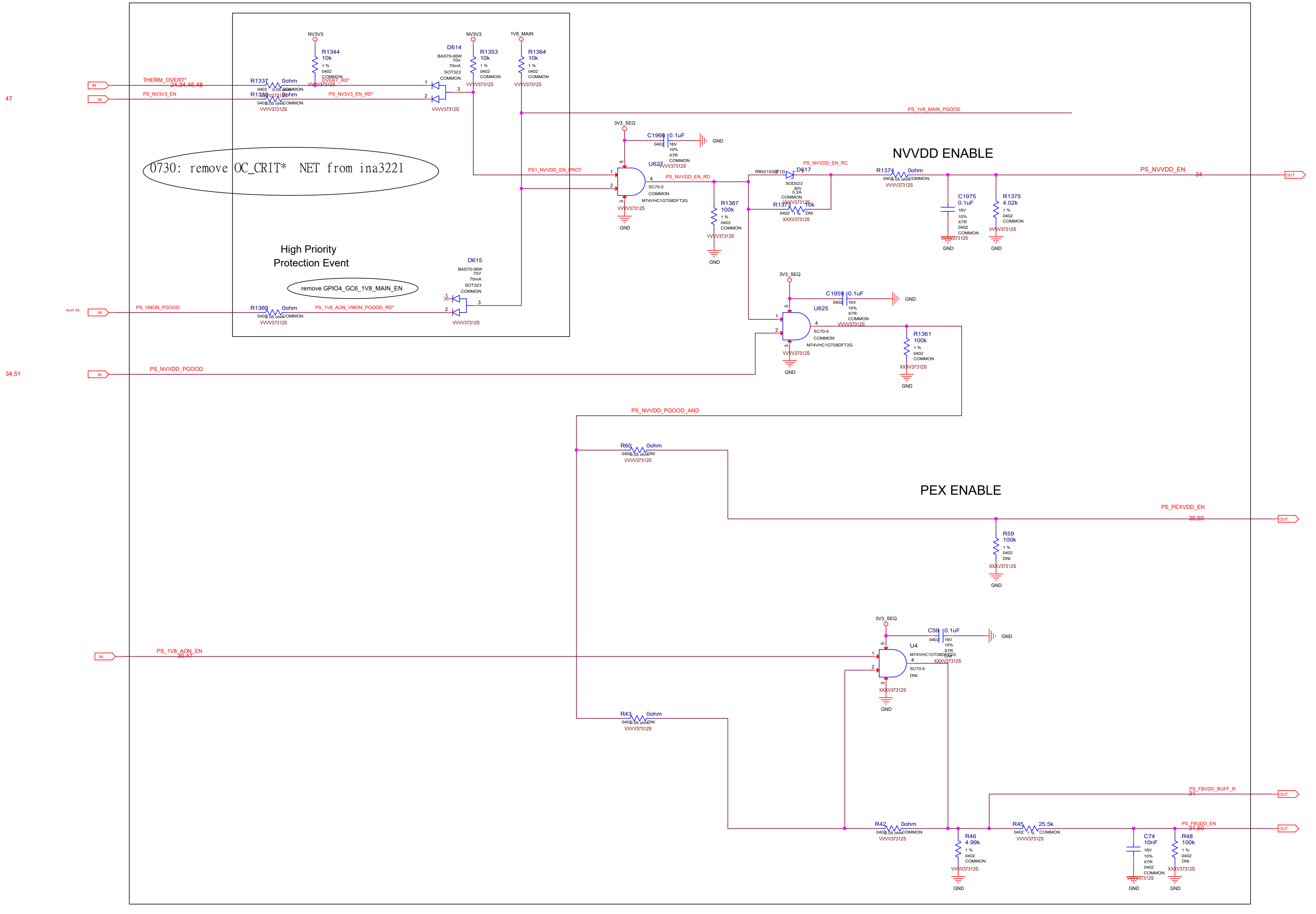

0730: remove OC_CRIT* NET from ina3221
High Priority
Protection Event
remove GPIO4_GC6_1V8_MAIN_EN
NVVDD ENABLE
PEX ENABLE
IN THERM_OVERT* 24,34,45,48
IN PS_NV3V3_EN 47
IN PS_VMON_PGOOD 44,47,49
IN PS_NVVDD_PGOOD 34,51
IN PS_1V8_AON_EN 30,47
NV3V3
1V8_MAIN
3V3_SEQ
R1344 10k 1 % 0402 COMMON VVVV37312S
R1337 0ohm 0402 0.05 ohm COMMON VVVV37312S
R1338 0ohm 0402 0.05 ohm COMMON VVVV37312S
OVERT_RD*
PS_NV3V3_EN_RD*
D614 BAS70-06W 70V 70mA SOT323 COMMON VVVV37312S
R1353 10k 1 % 0402 COMMON VVVV37312S
R1364 10k 1 % 0402 COMMON VVVV37312S
PS_1V8_MAIN_PGOOD
R1369 0ohm 0402 0.05 ohm COMMON VVVV37312S
PS_1V8_AON_VMON_PGOOD_RD*
D615 BAS70-06W 70V 70mA SOT323 COMMON VVVV37312S
PS1_NVVDD_EN_PROT
C1966 0.1uF 0402 16V 10% X7R COMMON VVVV37312S
U627 SC70-5 COMMON M74VHC1GT08DFT2G VVVV37312S
PS_NVVDD_EN_RD
R1367 100k 1 % 0402 COMMON VVVV37312S
D617 RB521S30T1G SOD523 30V 0.2A COMMON VVVV37312S
PS_NVVDD_EN_RC
R1373 10k 0402 1 % DNI XXXV37312S
R1374 0ohm 0402 0.05 ohm COMMON VVVV37312S
C1975 0.1uF 16V 10% X7R 0402 COMMON VVVV37312S
R1375 4.02k 1 % 0402 COMMON VVVV37312S
OUT PS_NVVDD_EN 34
C1959 0.1uF 0402 16V 10% X7R COMMON VVVV37312S
U625 SC70-5 COMMON M74VHC1GT08DFT2G VVVV37312S
R1361 100k 1 % 0402 COMMON XXXV37312S
PS_NVVDD_PGOOD_AND
R60 0ohm 0402 0.05 ohm DNI VVVV37312S
OUT PS_PEXVDD_EN 30,50
R59 100k 1 % 0402 DNI XXXV37312S
C59 0.1uF 0402 16V 10% X7R DNI XXXV37312S
U4 M74VHC1GT08DFT2G SC70-5 DNI XXXV37312S
R43 0ohm 0402 0.05 ohm DNI VVVV37312S
R42 0ohm 0402 0.05 ohm COMMON VVVV37312S
R46 4.99k 1 % 0402 COMMON VVVV37312S
OUT PS_FBVDD_BUFF_R 31
R45 25.5k 0402 1 % COMMON VVVV37312S
C74 10nF 16V 10% X7R 0402 COMMON VVVV37312S
R48 100k 1 % 0402 DNI XXXV37312S
OUT PS_FBVDD_EN 31,50
GND

MICRO-STAR INT'L CO.,LTD

MS-V373

Size	Document Description	Rev
Custom	Page48:SEQUENCE_ NV, PEX, FB ENAB	7.0

Date: Tuesday, August 21, 2018 | Sheet 48 of 54

PAGE 49: SEQUENCE:PCIE VOLTAGE MONITOR

PCIE Voltage Monitor

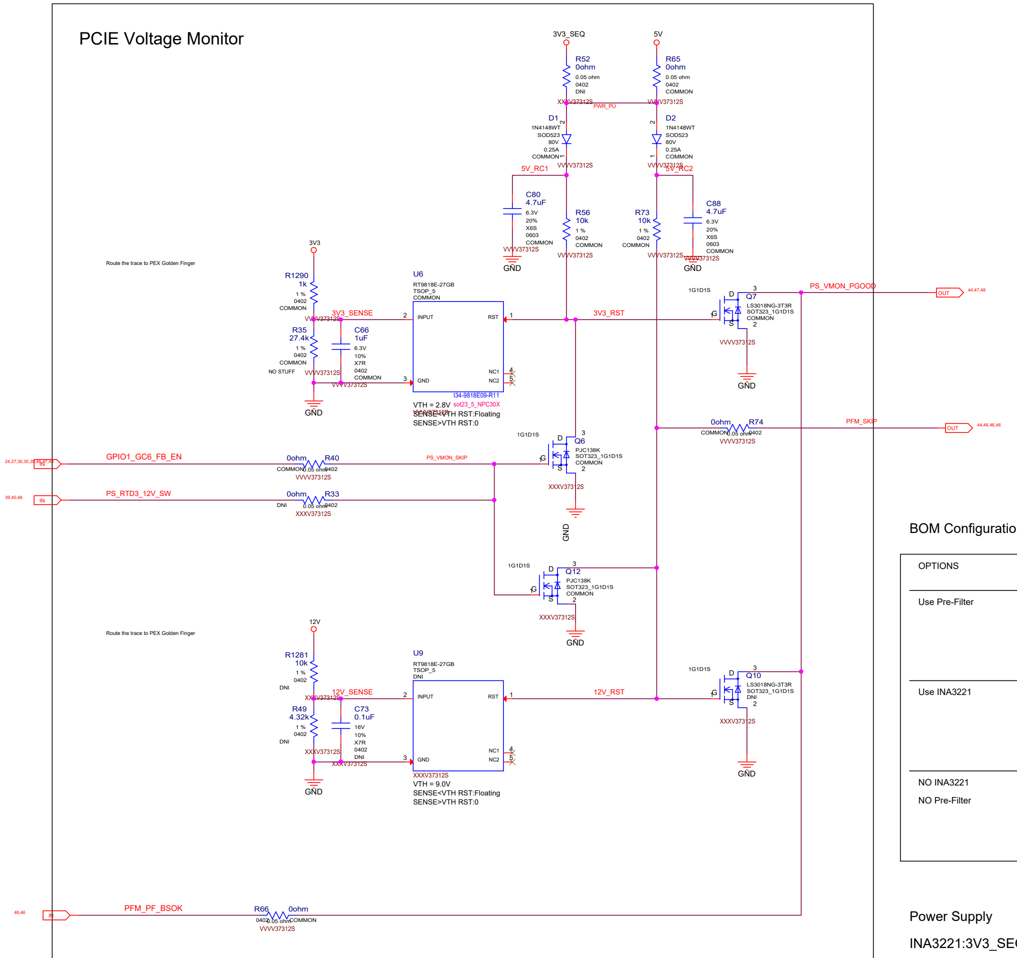
3V3_SEQ
R52
0ohm
0.05 ohm
0402
DNI
5V
R65
0ohm
0.05 ohm
0402
COMMON
XXVV37312S
VVVV37312S
PWR_PU
D1
1N4148WT
SOD523
80V
0.25A
COMMON
D2
1N4148WT
SOD523
80V
0.25A
COMMON
5V_RC1
5V_RC2
C80
4.7uF
6.3V
20%
X6S
0603
COMMON
R56
10k
1 %
0402
COMMON
R73
10k
1 %
0402
COMMON
C88
4.7uF
6.3V
20%
X6S
0603
COMMON
GND
Route the trace to PEX Golden Finger
3V3
R1290
1k
1 %
0402
COMMON
3V3_SENSE
R35
27.4k
1 %
0402
COMMON
NO STUFF
C66
1uF
6.3V
10%
X7R
0402
COMMON
U6
RT9818E-27GB
TSOP_5
COMMON
INPUT
RST
GND
NC1
NC2
I34-9818E09-R11
sot23_5_NPC30X
VTH = 2.8V
SENSE<VTH RST:Floating
SENSE>VTH RST:0
3V3_RST
1G1D1S
Q7
LS3018NG-3T3R
SOT323_1G1D1S
COMMON
PS_VMON_PGOOD
OUT
44,47,48
PFM_SKIP
0ohm
R74
COMMON
0.05 ohm
0402
OUT
44,46,46,46
Q6
PJC138K
SOT323_1G1D1S
COMMON
XXXV37312S
24,27,30,30,39,46,47,48
IN
GPIO1_GC6_FB_EN
0ohm
R40
COMMON
0.05 ohm
0402
PS_VMON_SKIP
39,40,46
IN
PS_RTD3_12V_SW
0ohm
R33
DNI
0.05 ohm
0402
Q12
PJC138K
SOT323_1G1D1S
COMMON
Route the trace to PEX Golden Finger
12V
R1281
10k
1 %
0402
DNI
12V_SENSE
R49
4.32k
1 %
0402
DNI
C73
0.1uF
16V
10%
X7R
0402
DNI
U9
RT9818E-27GB
TSOP_5
DNI
INPUT
RST
GND
NC1
NC2
VTH = 9.0V
SENSE<VTH RST:Floating
SENSE>VTH RST:0
12V_RST
Q10
LS3018NG-3T3R
SOT323_1G1D1S
DNI
46,46
IN
PFM_PF_BSOK
R66
0ohm
0402
0.05 ohm
COMMON
VVVV37312S

Signal	Direction	Function
3V3	INPUT	Sense the 3V3 Voltage from PCIE golden finger
12V	INPUT	Sense the 12V Voltage from PCIE golden finger
PS_VMON_PGOOD	OPEN-DRAIN	Floating(H) once both 3V3 and 12V reach Vth
GC6_FB_EN	INPUT	Indicator for RTD3/GC6 residence,Use to Mask the VMON_PGOOD
PS_PF_SKIP	INPUT	From INA3221(VPU) or Pre-filter(SKIP)
PS_PF_BSOK	INPUT	From INA3221(PV) or Pre-filter(BS_OK)
PS_RTD3_12V_SW	INPUT	GC6_FB_EN && IDLE_IN_SW

BOM Configuration

OPTIONS	PEX3V3_SENSE	PEX12V_SENSE	OTHER_12V_SENSE
Use Pre-Filter	Pre-Filter NO STUFF U12 NO STUFF Q3,Q5 NO STUFF D15	Pre-Filter NO STUFF U13 NO STUFF Q4	Pre-Filter
Use INA3221	Voltage_Monitor	INA3221 NO STUFF U12 NO STUFF Q4	INA3221
NO INA3221 NO Pre-Filter	Voltage_Monitor	Voltage_Monitor	N/A

Power Supply

INA3221:3V3_SEQ

Pre_Filter(ADC_MUX):3V3(PEX)

Dual Pre-Filter case:

Only use the Primary Pre-Filter to sense 3V3PEX

and All Input 12Vs

MICRO-STAR INT'L CO.,LTD
MS-V373
Size: Custom
Document Description: Page49:SEQUENCE_ PCIE VOLTAGE MON
Rev: 7.0
Date: Tuesday, August 21, 2018
Sheet 49 of 54

PAGE 50: SEQUENCE:DISCHARGE

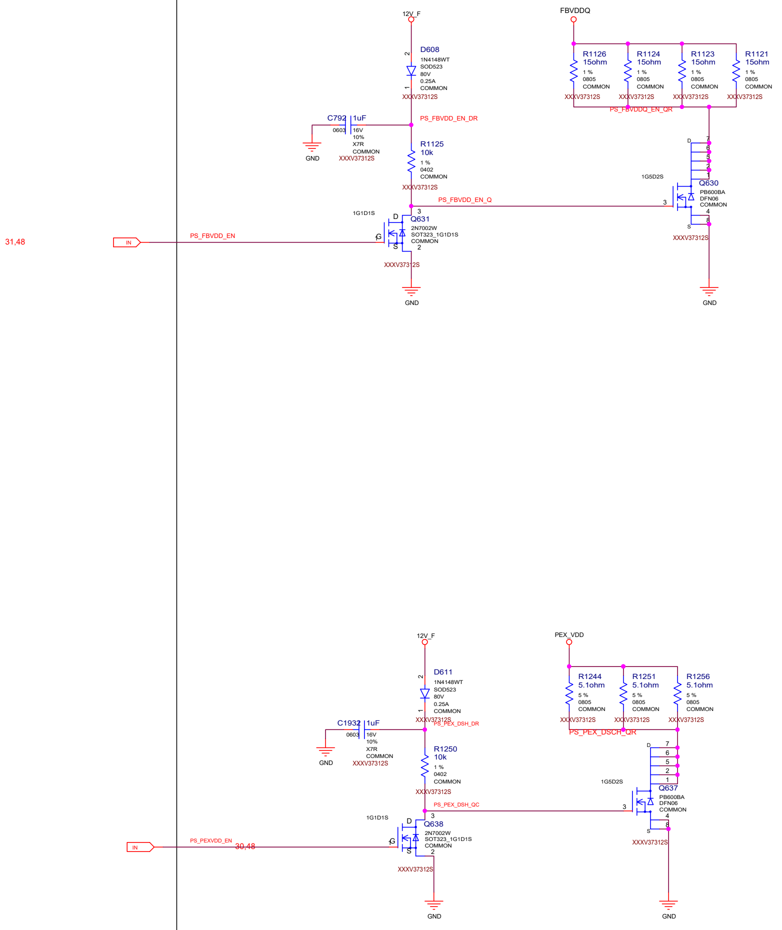
31,48
IN
PS_FBVDD_EN
12V_F
D608
1N4148WT
SOD523
80V
0.25A
COMMON
XXXV37312S
C792
1uF
0603
16V
10%
X7R
COMMON
XXXV37312S
GND
PS_FBVDD_EN_DR
R1125
10k
1 %
0402
COMMON
XXXV37312S
PS_FBVDD_EN_Q
1G1D1S
Q631
2N7002W
SOT323_1G1D1S
COMMON
XXXV37312S
GND
FBVDDQ
R1126
15ohm
1 %
0805
COMMON
XXXV37312S
R1124
15ohm
1 %
0805
COMMON
XXXV37312S
R1123
15ohm
1 %
0805
COMMON
XXXV37312S
R1121
15ohm
1 %
0805
COMMON
XXXV37312S
PS_FBVDDQ_EN_QR
1G5D2S
Q630
PB600BA
DFN06
COMMON
XXXV37312S
GND
IN
PS_PEXVDD_EN
30,48
12V_F
D611
1N4148WT
SOD523
80V
0.25A
COMMON
XXXV37312S
C1932
1uF
0603
16V
10%
X7R
COMMON
XXXV37312S
GND
PS_PEX_DSH_DR
R1250
10k
1 %
0402
COMMON
XXXV37312S
PS_PEX_DSH_QC
1G1D1S
Q638
2N7002W
SOT323_1G1D1S
COMMON
XXXV37312S
GND
PEX_VDD
R1244
5.1ohm
5 %
0805
COMMON
XXXV37312S
R1251
5.1ohm
5 %
0805
COMMON
XXXV37312S
R1256
5.1ohm
5 %
0805
COMMON
XXXV37312S
PS_PEX_DSCH_QR
1G5D2S
Q637
PB600BA
DFN06
COMMON
XXXV37312S
GND

MICRO-STAR INT'L CO.,LTD

MS-V373

Size	Document Description	Rev
Custom	Page50:SEQUENCE_ DISCHARGE	7.0

Date: Tuesday, August 21, 2018 | Sheet 50 of 54

PAGE 51: SEQUENCE:MISC

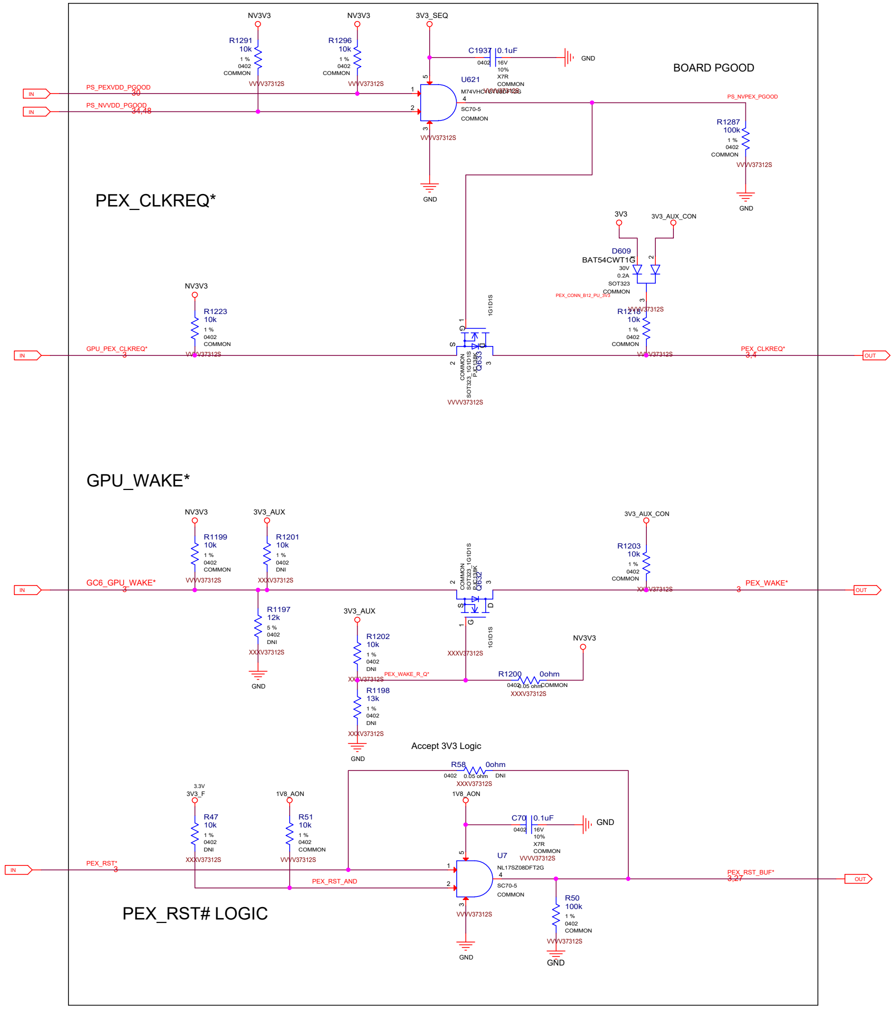
BOARD PGOOD
PEX_CLKREQ*
GPU_WAKE*
Accept 3V3 Logic
PEX_RST# LOGIC
IN
PS_PEXVDD_PGOOD
30
PS_NVVDD_PGOOD
34,48
NV3V3
R1291
10k
1 %
0402
COMMON
VVVV37312S
R1296
10k
3V3_SEQ
C1937
0.1uF
16V
10%
X7R
GND
U621
M74VHC1GT08DFT2G
SC70-5
PS_NVPEX_PGOOD
R1287
100k
3V3
3V3_AUX_CON
D609
BAT54CWT1G
30V
0.2A
SOT323
PEX_CONN_B12_PU_3V3
R1218
10k
R1223
GPU_PEX_CLKREQ*
3
Q633
PJC138K
SOT323_1G1D1S
1G1D1S
G
S
D
PEX_CLKREQ*
3,4
OUT
GC6_GPU_WAKE*
R1199
3V3_AUX
R1201
DNI
XXXV37312S
R1197
12k
5 %
R1202
PEX_WAKE_R_Q*
R1198
13k
Q632
R1203
PEX_WAKE*
R1200
0ohm
0.05 ohm
R58
3.3V
3V3_F
1V8_AON
R47
R51
C70
U7
NL17SZ08DFT2G
PEX_RST*
PEX_RST_AND
PEX_RST_BUF*
3,27
R50
100k

MICRO-STAR INT'L CO.,LTD

MS-V373

Size	Document Description	Rev
Custom	Page51:SEQUENCE_ MISC	7.0

Date: Tuesday, August 21, 2018 | Sheet 51 of 54

PAGE 52: LED & FAN HEADERS

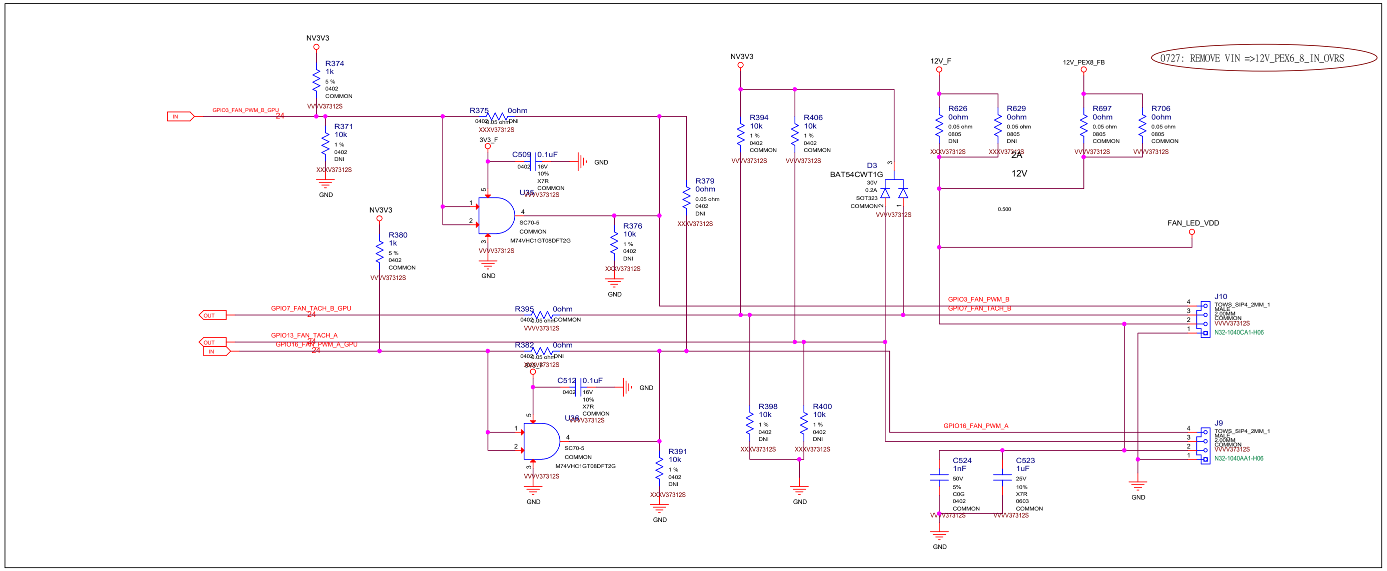

0727: REMOVE VIN =>12V_PEX6_8_IN_OVRS
NV3V3
R374
1k
5 %
0402
COMMON
VVVV37312S
IN
GPIO3_FAN_PWM_B_GPU
24
R371
10k
1 %
0402
DNI
XXXV37312S
GND
R375
0ohm
0402
0.05 ohm
DNI
XXXV37312S
3V3_F
C509
0.1uF
0402
16V
10%
X7R
COMMON
GND
U35
VVVV37312S
SC70-5
COMMON
M74VHC1GT08DFT2G
R376
10k
1 %
0402
DNI
XXXV37312S
R379
0ohm
0.05 ohm
0402
DNI
XXXV37312S
R380
1k
5 %
0402
COMMON
VVVV37312S
R394
10k
1 %
0402
COMMON
VVVV37312S
R406
10k
1 %
0402
COMMON
VVVV37312S
D3
BAT54CWT1G
30V
0.2A
SOT323
COMMON
VVVV37312S
12V_F
12V_PEX8_FB
R626
0ohm
0.05 ohm
0805
DNI
XXXV37312S
R629
0ohm
0.05 ohm
0805
DNI
XXXV37312S
R697
0ohm
0.05 ohm
0805
COMMON
VVVV37312S
R706
0ohm
0.05 ohm
0805
COMMON
VVVV37312S
2A
12V
0.500
FAN_LED_VDD
OUT
GPIO7_FAN_TACH_B_GPU
R395
0ohm
0402
0.05 ohm
COMMON
VVVV37312S
OUT
GPIO13_FAN_TACH_A
IN
GPIO16_FAN_PWM_A_GPU
R382
0ohm
0402
0.05 ohm
DNI
XXXV37312S
3V3_F
C512
0.1uF
0402
16V
10%
X7R
COMMON
GND
U36
VVVV37312S
SC70-5
COMMON
M74VHC1GT08DFT2G
R391
10k
1 %
0402
DNI
XXXV37312S
R398
10k
1 %
0402
DNI
XXXV37312S
R400
10k
1 %
0402
DNI
XXXV37312S
GPIO3_FAN_PWM_B
GPIO7_FAN_TACH_B
J10
TOWS_SIP4_2MM_1
MALE
2.00MM
COMMON
VVVV37312S
N32-1040CA1-H06
GPIO16_FAN_PWM_A
J9
TOWS_SIP4_2MM_1
MALE
2.00MM
COMMON
VVVV37312S
N32-1040AA1-H06
C524
1nF
50V
5%
C0G
0402
COMMON
VVVV37312S
C523
1uF
25V
10%
X7R
0603
COMMON
VVVV37312S
GND

LED BOOST

MICRO-STAR INT'L CO.,LTD

MS-V373

Size
Custom

Document Description
Page52:LED & FAN HEADERS

Rev
7.0

Date: Tuesday, August 21, 2018

PAGE 53: LED_CONTROLLER_IT8295

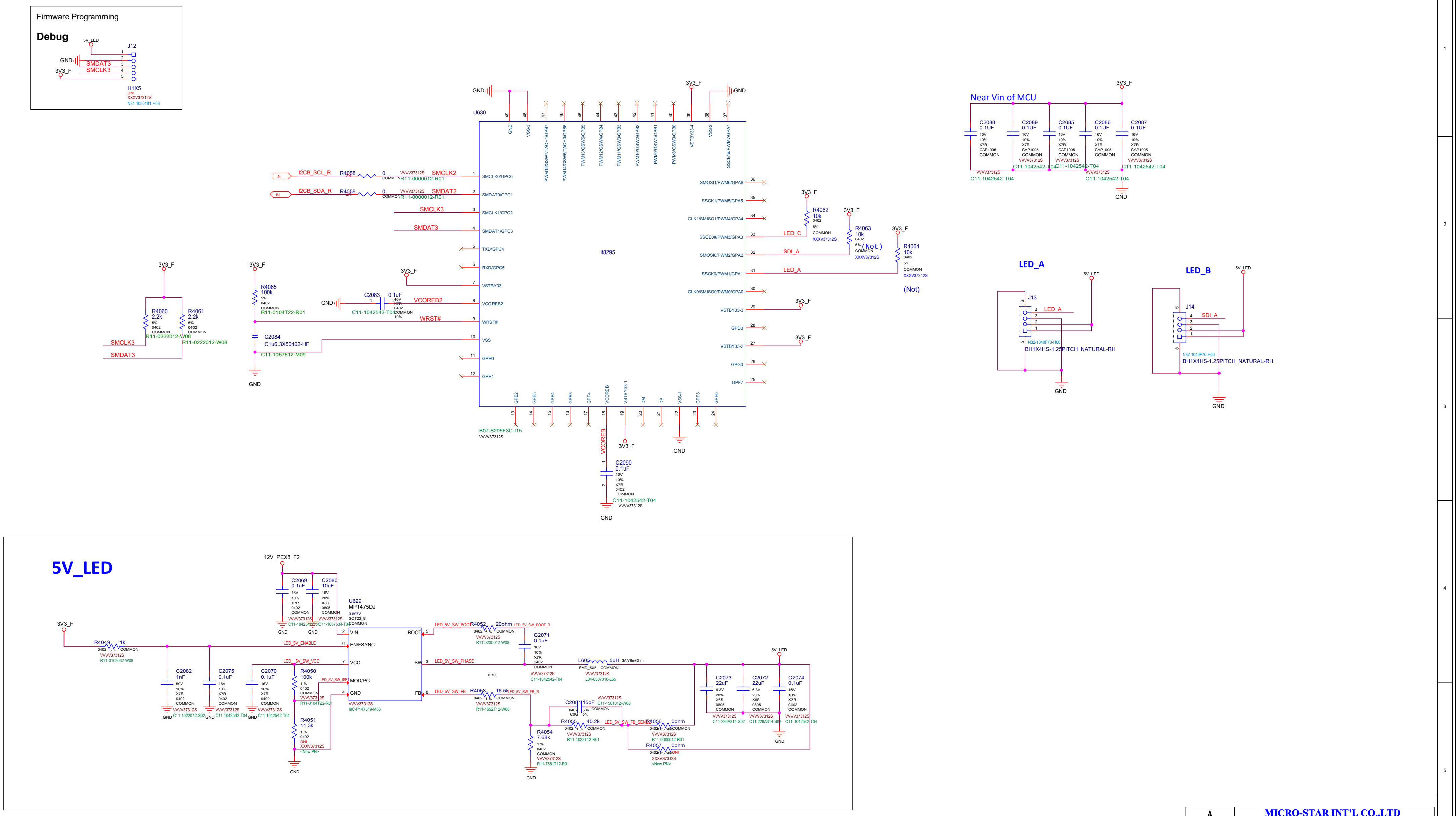
Firmware Programming
Debug
5V_LED
J12
GND
SMDAT3
SMCLK3
3V3_F
H1X5
DNI
XXXV37312S
N31-1050161-H06
U630
it8295
B07-8295F3C-I15
VVVV37312S
GND
3V3_F
I2CB_SCL_R
I2CB_SDA_R
R4058
R4059
R11-0000012-R01
SMCLK2
SMDAT2
SMCLK3
SMDAT3
SMCLK0/GPC0
SMDAT0/GPC1
SMCLK1/GPC2
SMDAT1/GPC3
TXD/GPC4
RXD/GPC5
VSTBY33
VCOREB2
WRST#
VSS
GPE0
GPE1
SMOSI1/PWM6/GPA6
SSCK1/PWM5/GPA5
GLK1/SMISO1/PWM4/GPA4
SSCE0#/PWM3/GPA3
SMOSI0/PWM2/GPA2
SSCK0/PWM1/GPA1
GLK0/SMISO0/PWM0/GPA0
VSTBY33-3
GPD0
VSTBY33-2
GPG0
GPF7
LED_C
SDI_A
LED_A
R4062 10k
R4063 10k
R4064 10k
(Not)
C2083 0.1uF
C11-1042542-T04
R4065 100k
R11-0104T22-R01
C2084
C1u6.3X50402-HF
C11-1057612-M09
R4060 2.2k
R4061 2.2k
R11-0222012-W08
VCOREB
C2090 0.1uF
Near Vin of MCU
C2088 0.1UF
C2089 0.1UF
C2085 0.1UF
C2086 0.1UF
C2087 0.1UF
LED_A
LED_B
J13
J14
N32-1040F70-H06
BH1X4HS-1.25PITCH_NATURAL-RH
5V_LED
12V_PEX8_F2
C2069 0.1uF
C2080 10uF
U629
MP1475DJ
SOT23_8
VIN
EN/FSYNC
VCC
MOD/PG
GND
BOOT
SW
FB
I9C-P147519-M03
R4049 1k
LED_5V_ENABLE
C2082 1nF
C2075 0.1uF
C2070 0.1uF
R4050 100k
R4051 11.3k
LED_5V_SW_BOOT
R4052 20ohm
C2071 0.1uF
LED_5V_SW_PHASE
L605 5uH 3A/78mOhm
L04-0507010-L65
LED_5V_SW_FB
R4053 16.5k
C2081 15pF
R4055 40.2k
R4054 7.68k
R4056 0ohm
R4057 0ohm
LED_5V_SW_FB_SENSE
C2073 22uF
C2072 22uF
C2074 0.1uF
C11-226A314-S02
<New PN>

MICRO-STAR INT'L CO.,LTD

MS-V373

Size	Document Description	Rev
Custom	Page53:LED_CONTROLLER_IT8295	7.0

Date: Tuesday, August 21, 2018 | Sheet 53 of 54

PAGE 54:MECHANICAL;BRACKET/THERMAL SOLUTION

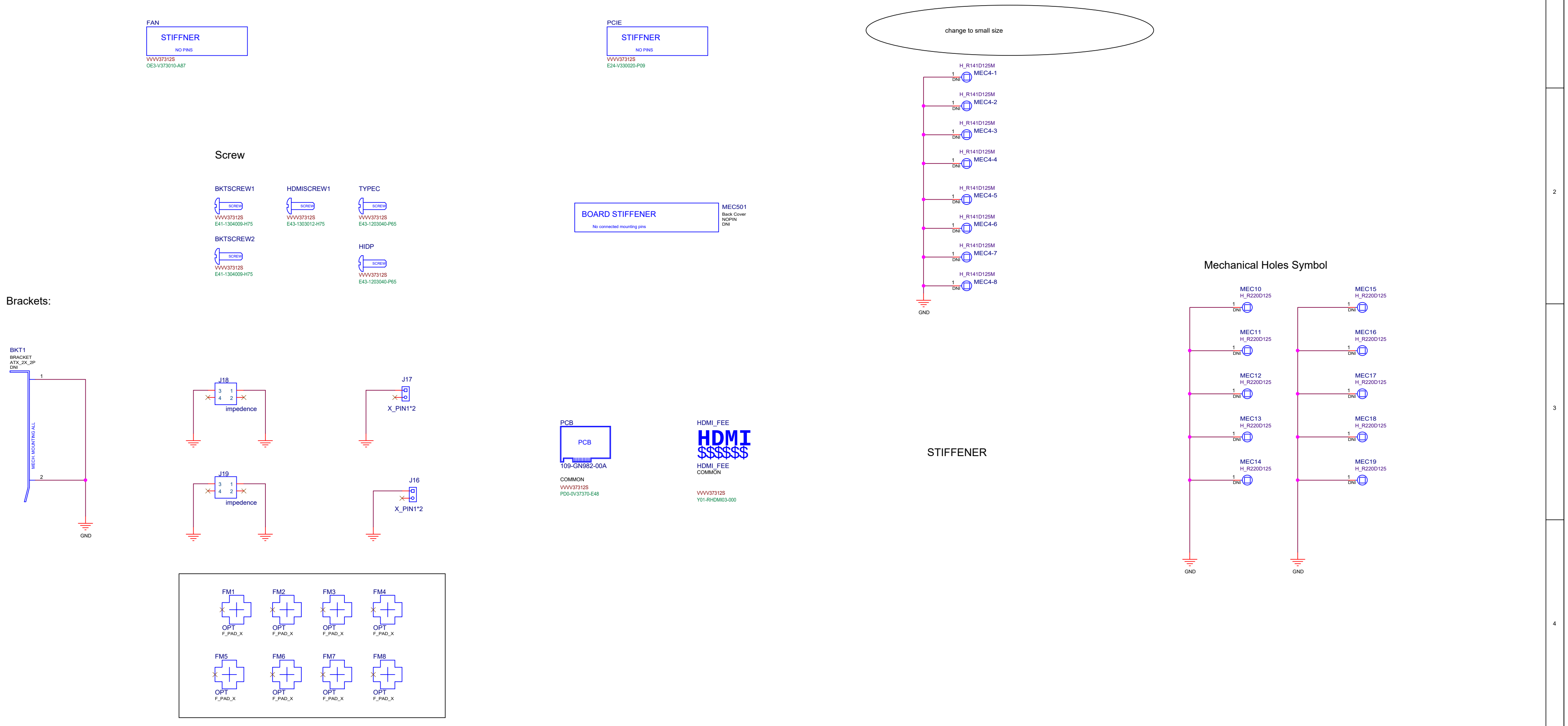
FAN
STIFFNER
NO PINS
VVVV37312S
OE3-V373010-A87
PCIE
STIFFNER
NO PINS
VVVV37312S
E24-V330020-P09
change to small size
H_R141D125M
MEC4-1
H_R141D125M
MEC4-2
H_R141D125M
MEC4-3
H_R141D125M
MEC4-4
H_R141D125M
MEC4-5
H_R141D125M
MEC4-6
H_R141D125M
MEC4-7
H_R141D125M
MEC4-8
1
DNI
GND
Screw
BKTSCREW1
SCREW
VVVV37312S
E41-1304009-H75
HDMISCREW1
SCREW
VVVV37312S
E43-1303012-H75
TYPEC
SCREW
VVVV37312S
E43-1203040-P65
BKTSCREW2
SCREW
VVVV37312S
E41-1304009-H75
HIDP
SCREW
VVVV37312S
E43-1203040-P65
BOARD STIFFENER
No connected mounting pins
MEC501
Back Cover
NOPIN
DNI
Mechanical Holes Symbol
MEC10
H_R220D125
MEC11
H_R220D125
MEC12
H_R220D125
MEC13
H_R220D125
MEC14
H_R220D125
MEC15
H_R220D125
MEC16
H_R220D125
MEC17
H_R220D125
MEC18
H_R220D125
MEC19
H_R220D125
1
DNI
GND
GND
Brackets:
BKT1
BRACKET
ATX_2X_2P
DNI
MECH. MOUNTING ALL
1
2
GND
J18
3 1
4 2
impedence
J17
X_PIN1*2
J19
3 1
4 2
impedence
J16
X_PIN1*2
PCB
PCB
109-GN982-00A
COMMON
VVVV37312S
PD0-0V37370-E48
HDMI_FEE
HDMI
$$$$$$
HDMI_FEE
COMMON
VVVV37312S
Y01-RHDMI03-000
STIFFENER
FM1
FM2
FM3
FM4
FM5
FM6
FM7
FM8
OPT
F_PAD_X

MICRO-STAR INT'L CO.,LTD

MS-V373

Size	Document Description	Rev
Custom	Page54:Mechanical_ Bracket_Therma	7.0

Date: Tuesday, August 21, 2018