MS-V091 -- G84, 256/512 MB 16x32 DDR3-136pin, DVI-I,SD/HDTV,VIVO,

SUMMARY:

1. Base on V069-100 to Modify HDMI change to internal support
2. BGA-136 DDRIII
3. RT-8805 Two Phase PWM for NVVDD
4. MS-11 for FBVDD

Table of Contents:

Page 1: TITLE
Page 2: PCIe INTERFACE
Page 3: FBA INTERFACE
Page 4: FB A1
Page 5: FBA DECOUPLING
Page 6: FB A2
Page 7: FBC INTERFACE
Page 8: FB C1
Page 9: FBC DECOUPLING
Page 10: FB C2
Page 11: MIOA/MIOB
Page 12: DACC
Page 13: DACA
Page 14: DACB
Page 15: VIDEO CAPTURE
Page 16: TMDS LINK A & B
Page 17: TMDS LINK C & D
Page 18: 4-Pin Video-In/SPDIF IN
Page 19: GPIO/ROM/HDCP ROM
Page 20: Straps/Mechanical
Page 21: Linear Power
Page 22: NVVDD with MS-11 MS-V1
Page 23: FBVDD with MS-11 MS-V1

Rev History

OA

Page 3 Enable G23pin H_PLLVDD 1V2 for G84 only
Page 11 reserve G84 SLI circuit
Page 12,13,14 reserve DAC_Vref power for G84 DACA,B,C
Page 16 reserve 1V8 for G84 IFPAB_PLLVDD
Page 17 reserve 1V8 for G84 IFPCD_PLLVDD
Page 18 reserve 1V2 for G84 PLLVDD and VID_PLLVDD
Page 20 reserve MIOB_CTL3 new strap for G84 PCI_DEVID_4
Page 20 reserve ROM_SI pull-down resister required if MIOA VDDQ=2.5V for G84
Page 21add 1V8 power for G84
Page 22,23 Reserve MS-V1co-lay circuit

100

Page 3 H_PLLVDD 1V2 use 0ohm connect to PEX1V2
Page 3 Reserve G84 Dual Rank(Stacked Die) circuit FBA_CMD7----CS1 FBA_CMD27---BA2
Page 7 Reserve G84 Dual Rank(Stacked Die) circuit FBC_CMD7----CS1 FBC_CMD27---BA2
Page 7 Reserve I2CS citcuit for G84
Page 6,10 Enable FBAA2 and FBCC2 BA2 Pin this is for Stacked Die Function
Page 13 Modify RGB circuit
Page 15 Modify SAA7115 RESET circuit
Page 18 Modify Spidf circuit
Page 21 Modify Linear Power circuit
Page 22 NVVDD PWM Change to RT-8805 Two Phase
Page 22,23 Remove MS-V1co-lay circuit

110

Page 3 Connect FBVDD for G84
Page 18 Reverve other Spidf circuit
Page 22 Co-lay small chock for NVVDD

V091-Base on V089-110 to Modify

1.Modify to power NVVDD and FBVDDQ cirdcuit
2.Remove HDMI Circuit Add DIV Circuit
3.Rem SPIDF Circuit
4.Add Dual VBIOS Circuit
5.Add Thermal Protection Circut

MSI	Micro-Star International Co., LTD.		
	SUMMARY		
Size: Custom	Document Number: MS-V091		Rev: 100
Date: Monday, March 26, 2007	Sheet 1 of 23		

16X PCIe Interface

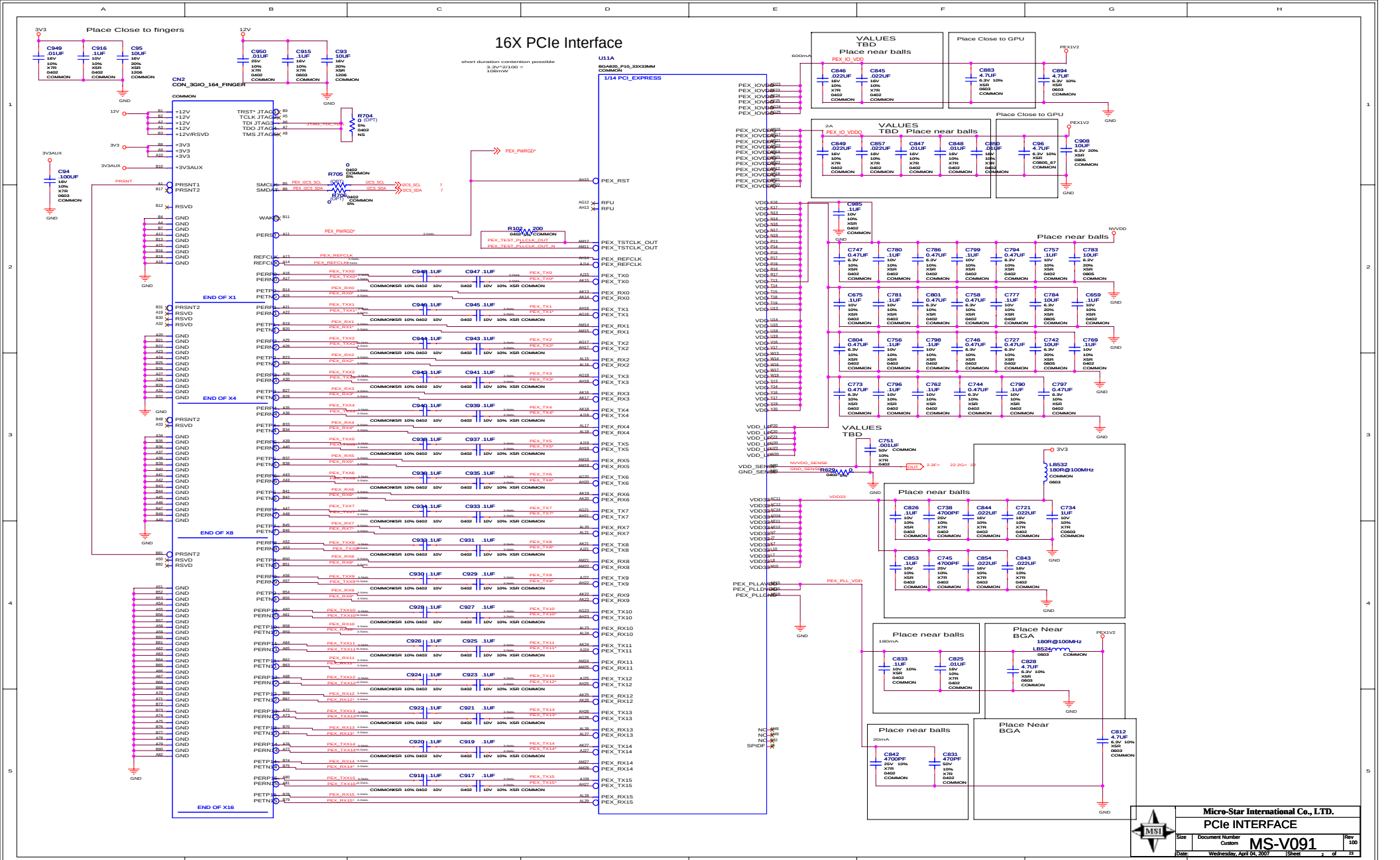

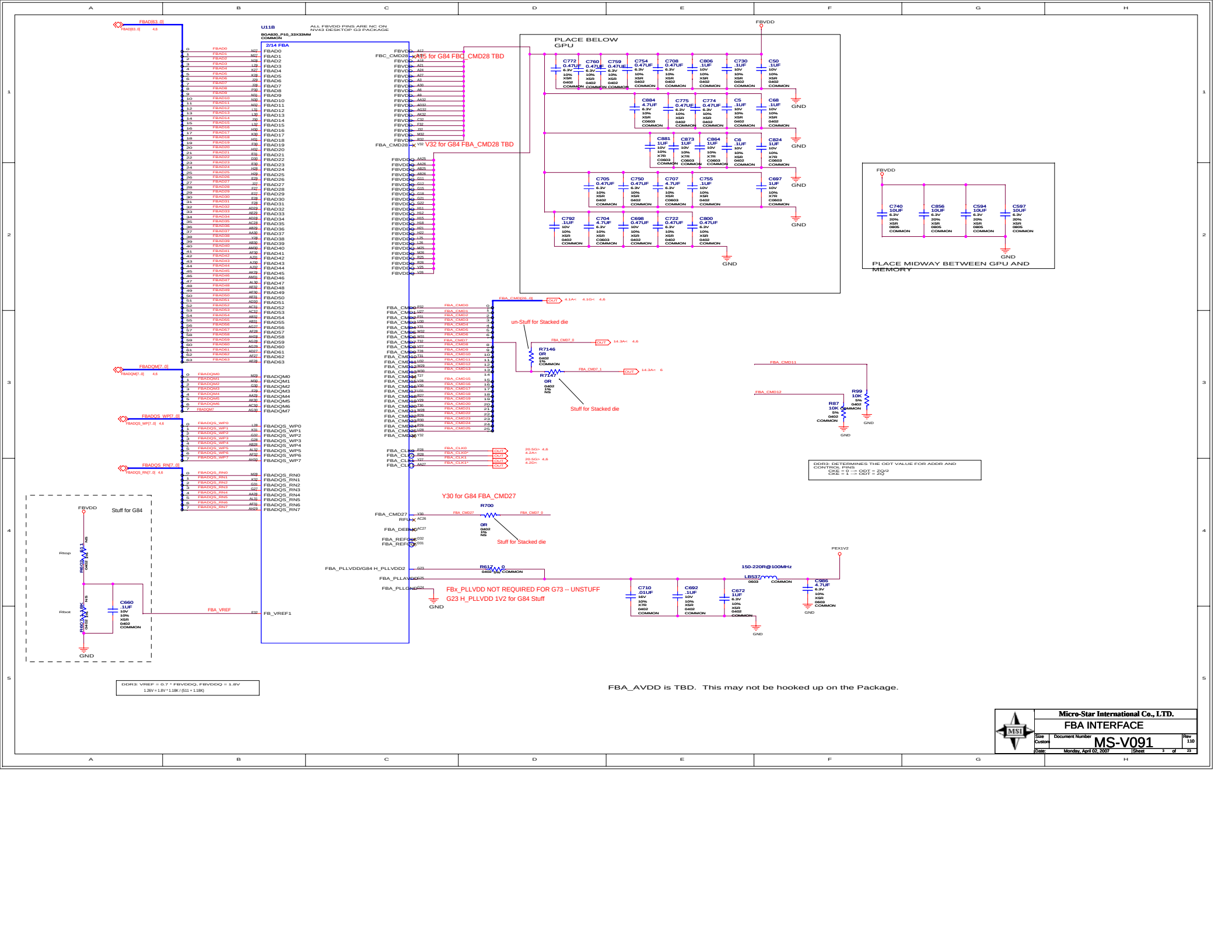
U11B
ALL FBVDD PINS ARE NC ON NV43 DESKTOP G3 PACKAGE
8GA820_P10_33X33MM
COMMON
2/14 FBA
PLACE BELOW GPU
PLACE MIDWAY BETWEEN GPU AND MEMORY
Stuff for G84
Stuff for Stacked die
un-Stuff for Stacked die
Y30 for G84 FBA_CMD27
V32 for G84 FBA_CMD28 TBD
FBx_PLLVDD NOT REQUIRED FOR G73 -- UNSTUFF
G23 H_PLLVDD 1V2 for G84 Stuff
DDR3: VREF = 0.7 * FBVDDQ, FBVDDQ = 1.8V
1.26V = 1.8V * 1.18K / (511 + 1.18K)
DDR3: DETERMINES THE ODT VALUE FOR ADDR AND CONTROL PINS
CKE = 0 --> ODT = ZQ/2
CKE = 1 --> ODT = ZQ
FBA_AVDD is TBD. This may not be hooked up on the Package.
Micro-Star International Co., LTD.
FBA INTERFACE
MS-V091
Rev 1.0
Monday, April 02, 2007
Sheet 3 of 23

FrameBuffer: Partition A
16Mx32 BGA136 DDR3

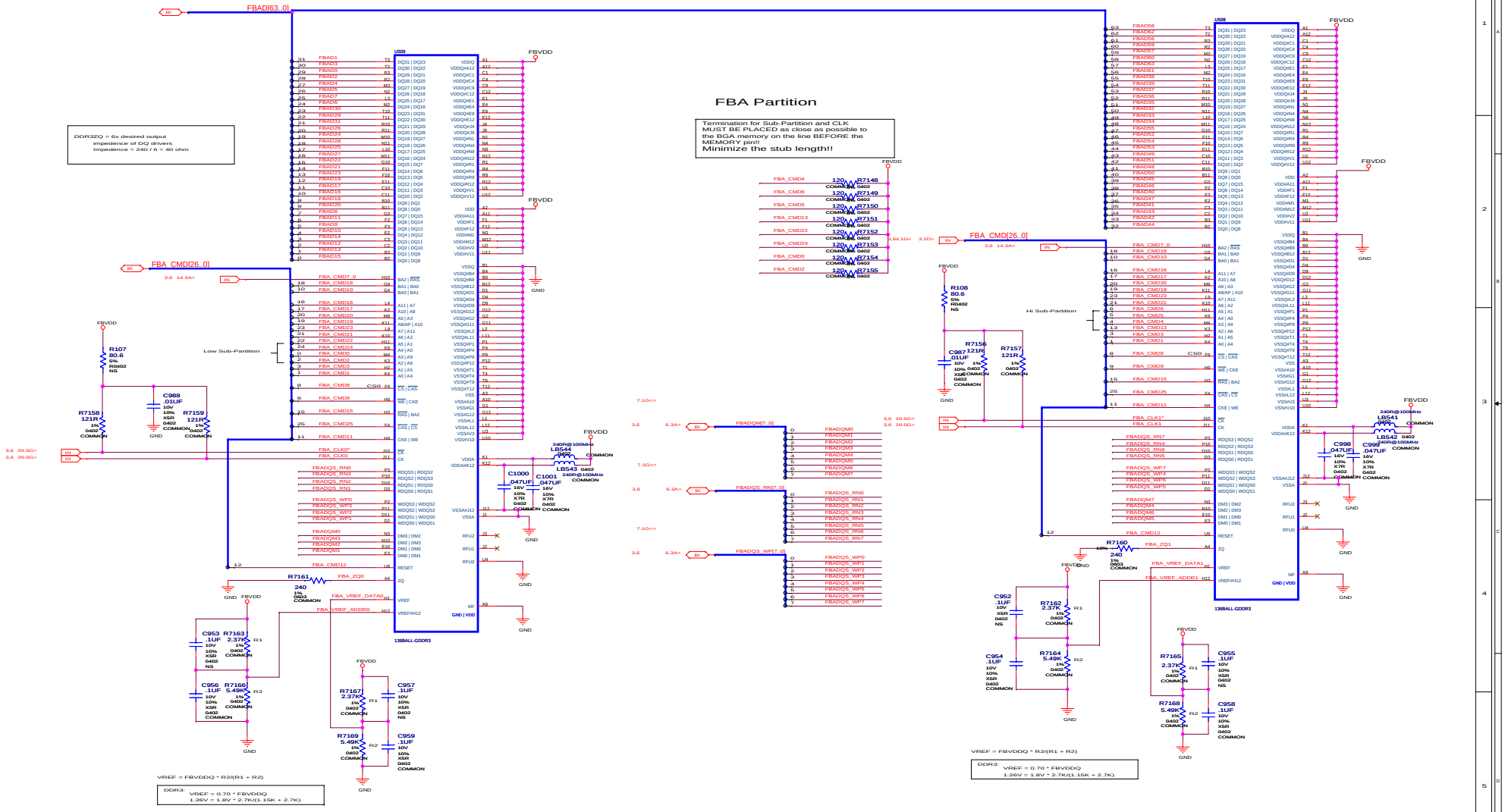

Micro-Star International Co., LTD.	
FB A1	
Size: Custom	Document Number: MS-V091
Rev: 110	
Date: Monday, April 02, 2007	Sheet 4 of 23

FRAME BUFFER: PARTITION A DECOUPLING

Decoupling for FBA 0..31

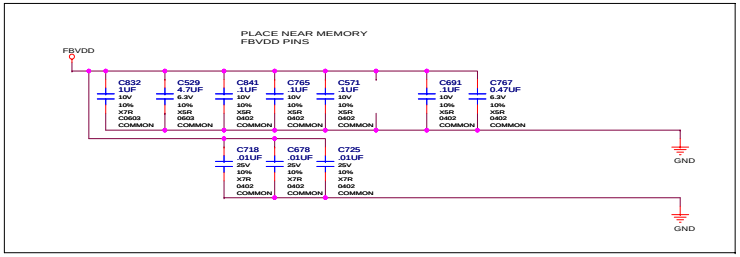

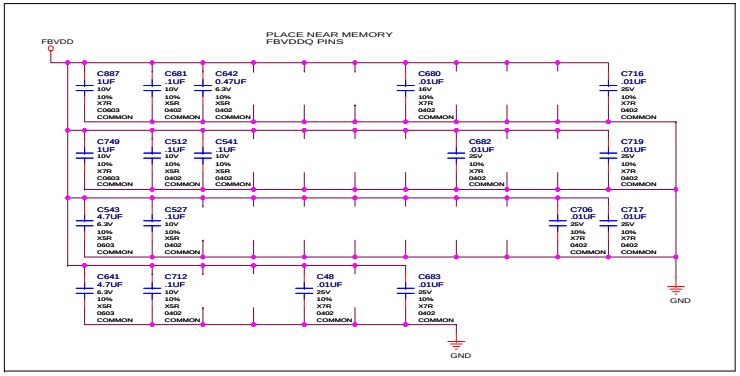

Decoupling for FBA 32..63

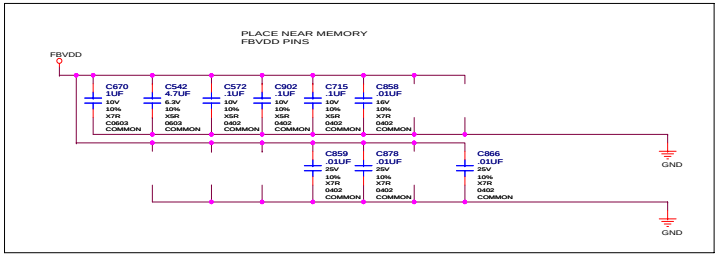

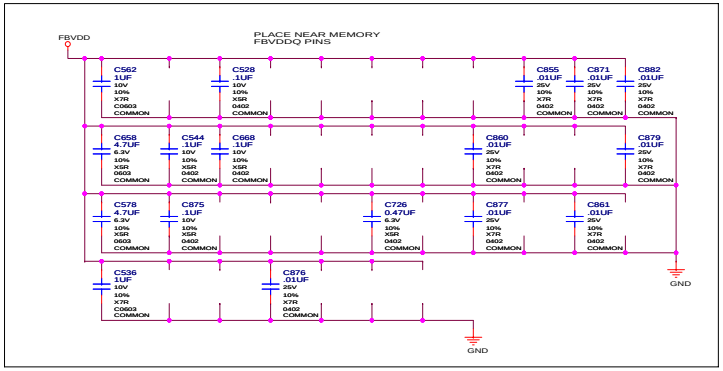

Micro-Star International Co., LTD.	
FBA DECOUPLING	
Size: Custom	Document Number: MS-V091
Rev: 100	
Date: Monday, April 02, 2007	Sheet 5 of 23

FrameBuffer: Partition A
16Mx32 BGA136 DDR3

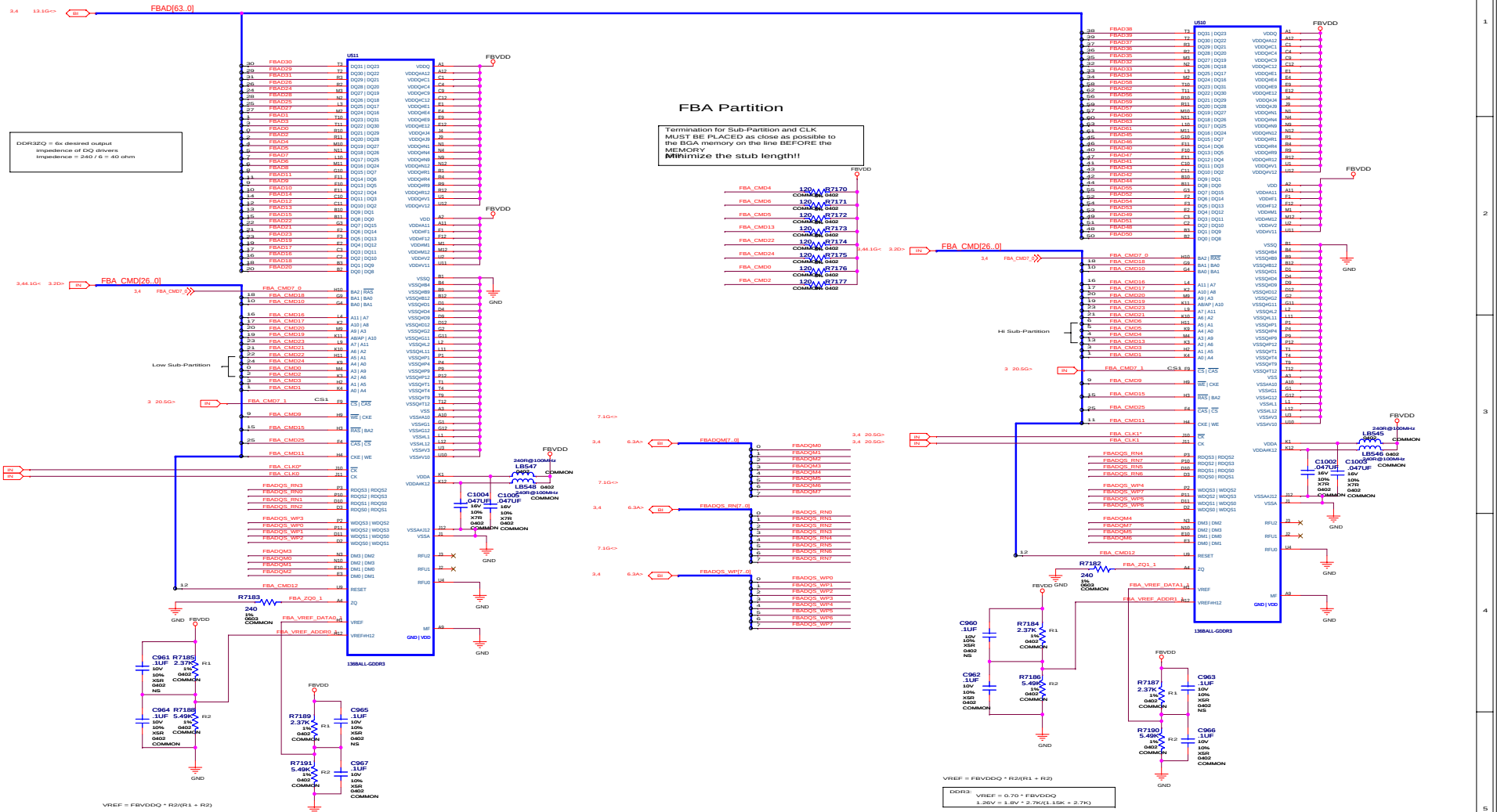

Micro-Star International Co., LTD.	
FB A2	
Size: Custom	Document Number: MS-V091
Rev: 1.0	
Date: Monday, April 02, 2007	Sheet 6 of 23

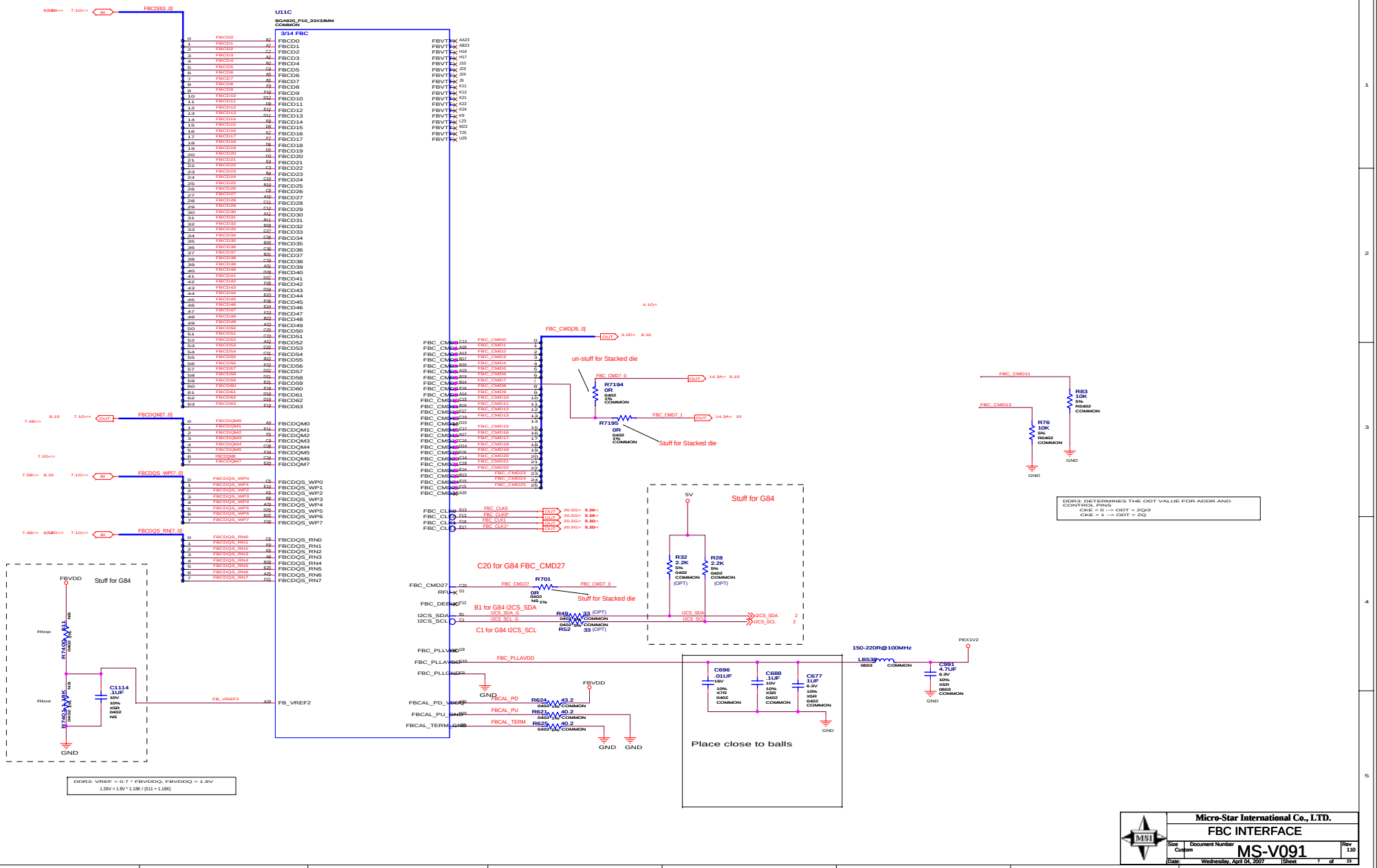
U11C
8GA820_P10_33X33MM
COMMON
3/14 FBC
FBCD[63..0]
FBCDQM[7..0]
FBCDQS_WP[7..0]
FBCDQS_RN[7..0]
FBVDD
Stuff for G84
Rtop
Rbot
C1114
1UF
10V
X5R
0402
NS
FB_VREF2
GND
DDR3: VREF = 0.7 * FBVDDQ, FBVDDQ = 1.8V
1.26V = 1.8V * 118K / (511 + 118K)
un-stuff for Stacked die
FBC_CMD[26..0]
FBC_CMD7_0
R7194
0R
0402
1%
COMMON
R7195
Stuff for Stacked die
FBC_CMD11
FBC_CMD12
R83
10K
5%
R0402
COMMON
R76
10K
5%
R0402
COMMON
DDR3: DETERMINES THE ODT VALUE FOR ADDR AND CONTROL PINS
CKE = 0 --> ODT = 2Q/2
CKE = 1 --> ODT = 2Q
C20 for G84 FBC_CMD27
R701
Stuff for Stacked die
B1 for G84 I2CS_SDA
C1 for G84 I2CS_SCL
R49
R52
33
(OPT)
COMMON
Stuff for G84
5V
R32
2.2K
5%
0402
(OPT)
R28
2.2K
5%
0402
COMMON
(OPT)
I2CS_SDA
I2CS_SCL
FBC_PLLAVDD
150-220R@100MHz
LB539
0603
COMMON
PEX1V2
C696
.01UF
10V
10%
X7R
0402
COMMON
C688
1UF
10V
10%
X5R
0402
COMMON
C677
1UF
6.3V
10%
X5R
0402
COMMON
C991
4.7UF
6.3V
10%
X5R
0603
COMMON
Place close to balls
FBCAL_PD
FBCAL_PU
FBCAL_TERM
R624
R621
R625
43.2
40.2
40.2
COMMON
Micro-Star International Co., LTD.
FBC INTERFACE
Size
Custom
Document Number
MS-V091
Rev
1.0
Date:
Wednesday, April 04, 2007
Sheet
7
of
23

FRAMEBUFFER: PARTITION C 16Mx32 BGA136 DDR3

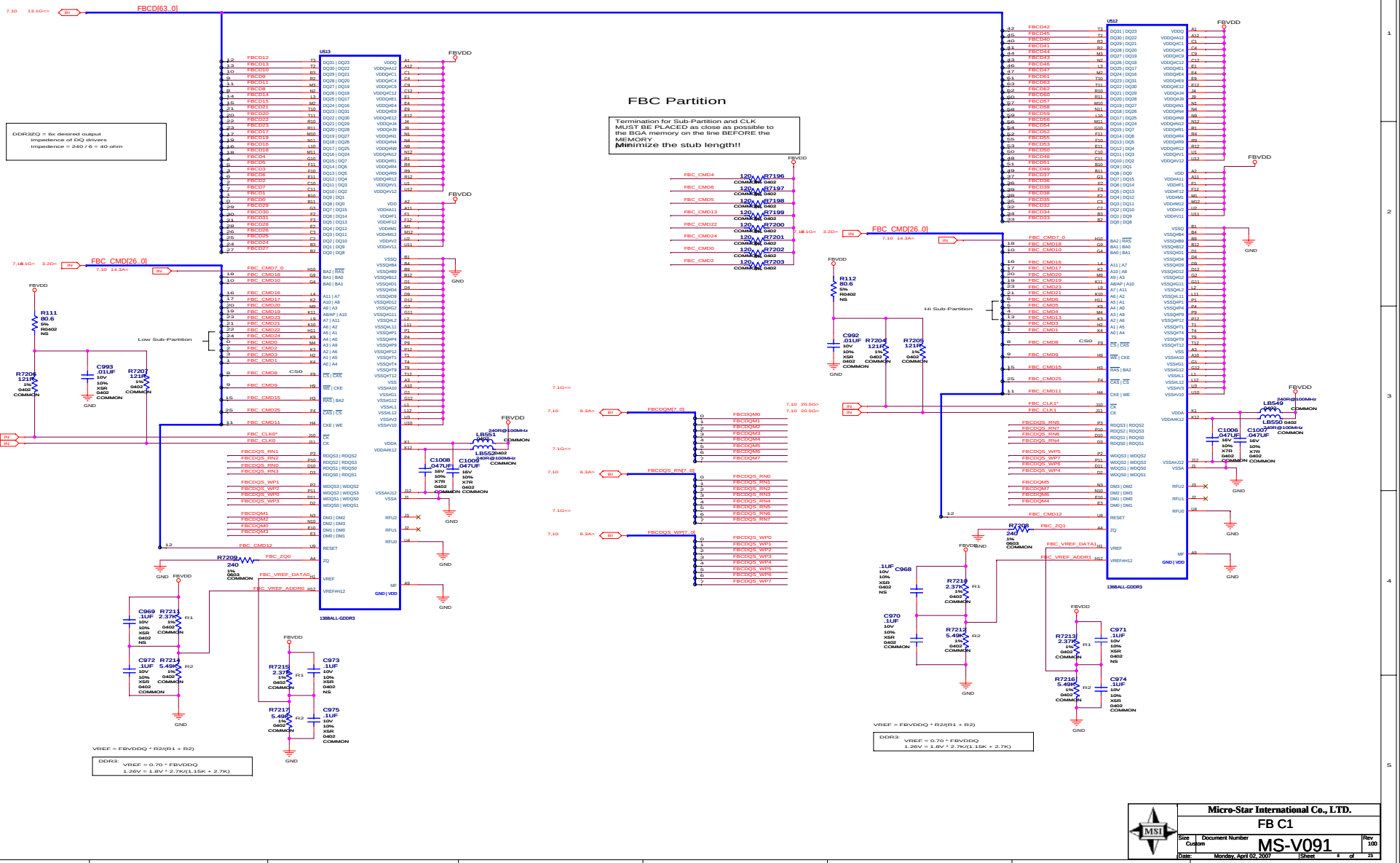

Micro-Star International Co., LTD.	
FB C1	
Size: Custom	Document Number: MS-V091
Rev: 100	
Date: Monday, April 02, 2007	Sheet 8 of 23

FRAMEBUFFER: PARTITION C DECOUPLING

Decoupling for FBC 0..31

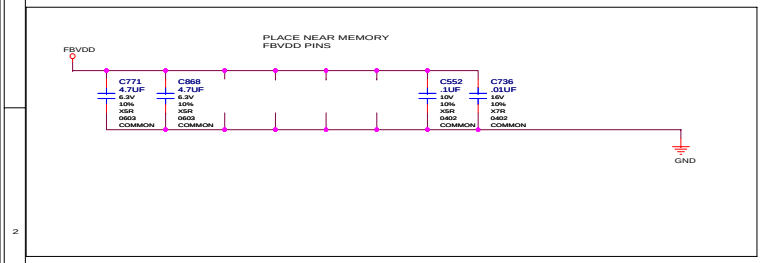

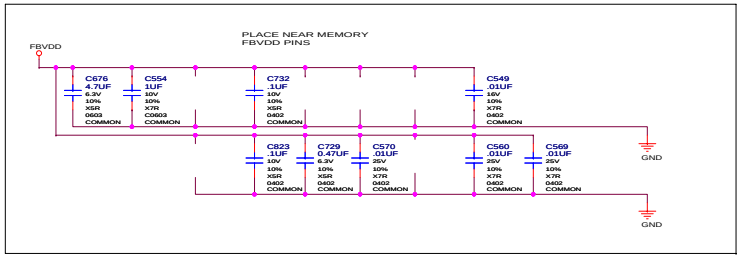

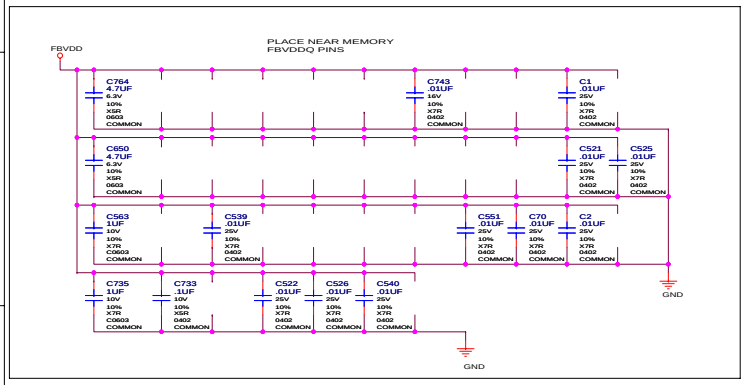

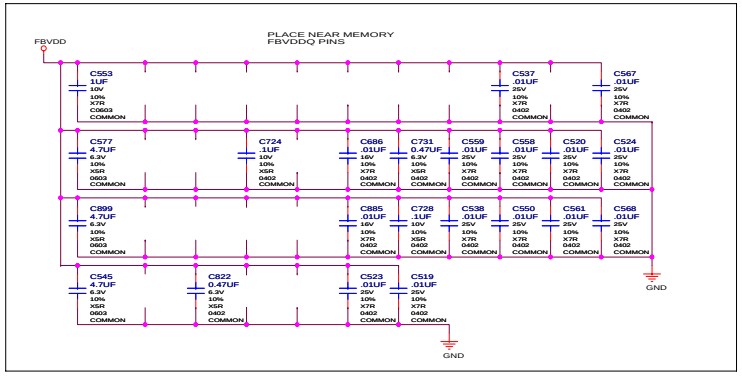

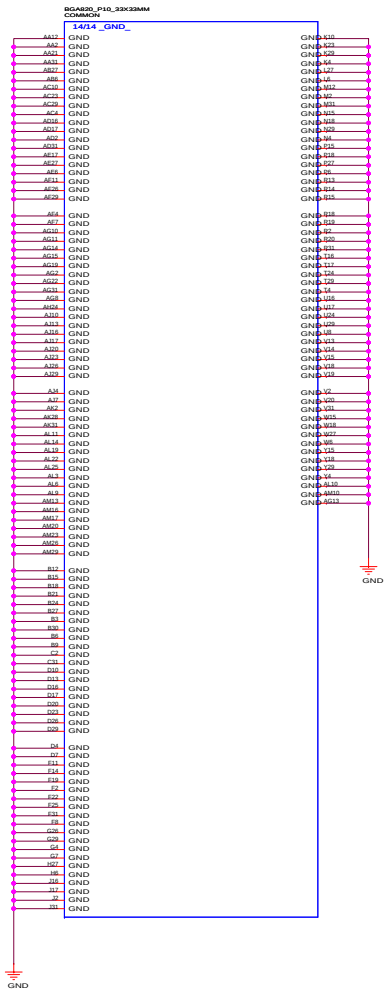

Micro-Star International Co., LTD.	
FBC DECOUPLING	
Size: Custom	Document Number: MS-V091
Rev: 100	
Date: Monday, April 02, 2007	Sheet 9 of 23

FRAMEBUFFER: PARTITION C 8Mx32 BGA136 DDR3

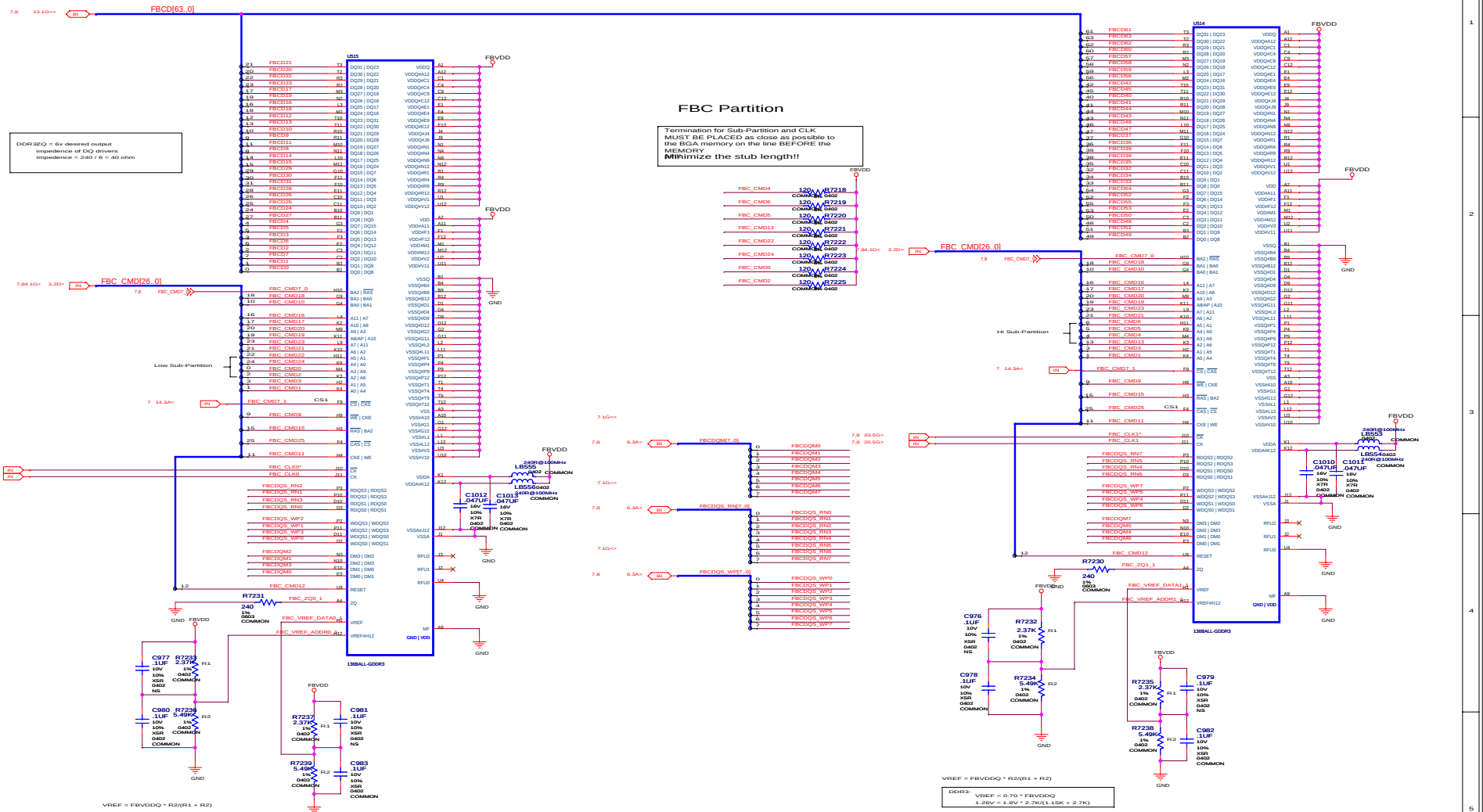

Micro-Star International Co., LTD.	
FB C2	
Size: Custom	Document Number: MS-V091
Rev: 1.0	
Date: Monday, April 02, 2007	Sheet 10 of 23

G3 VIP/MIOB

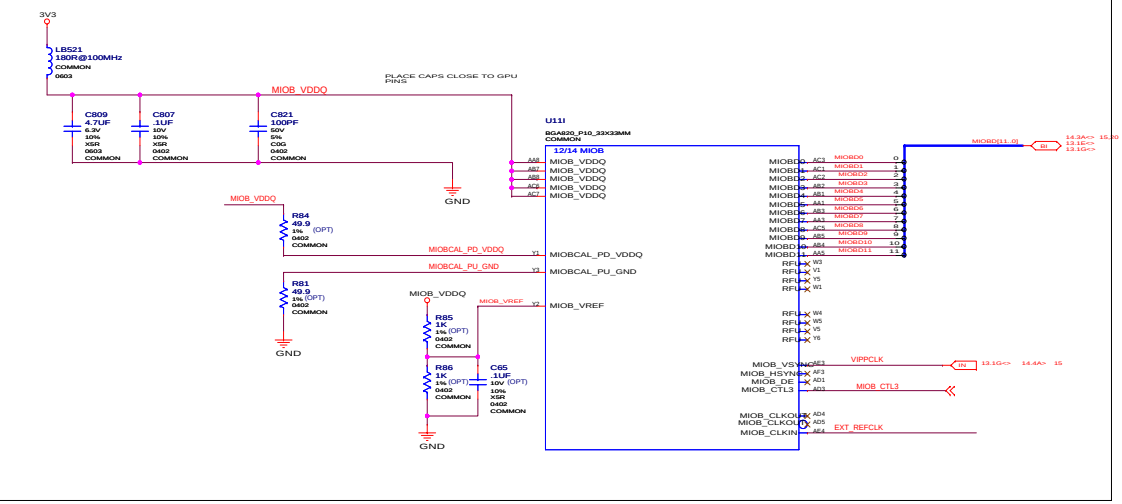

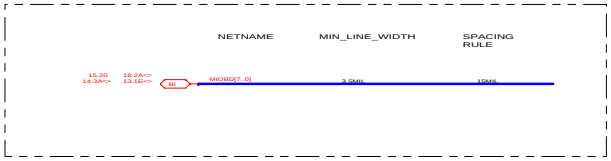

G3 MIOA

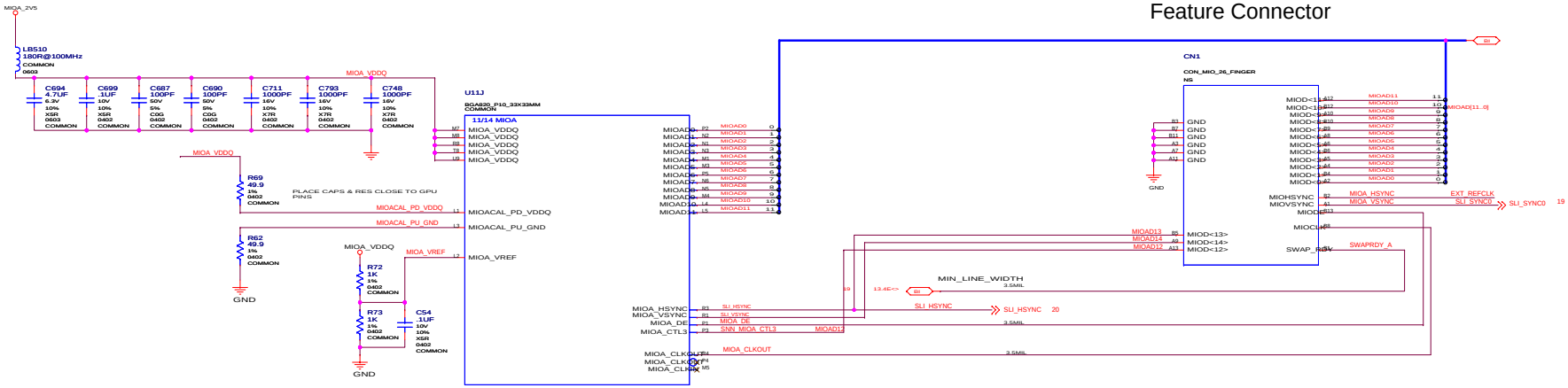

Feature Connector

Micro-Star International Co., LTD.	
MIOA/MIOB	
Size: Custom	Document Number: MS-V091
Rev: 100	
Date: Monday, April 02, 2007	Sheet 11 of 23

Secondary Display (DACC),Slim DB15

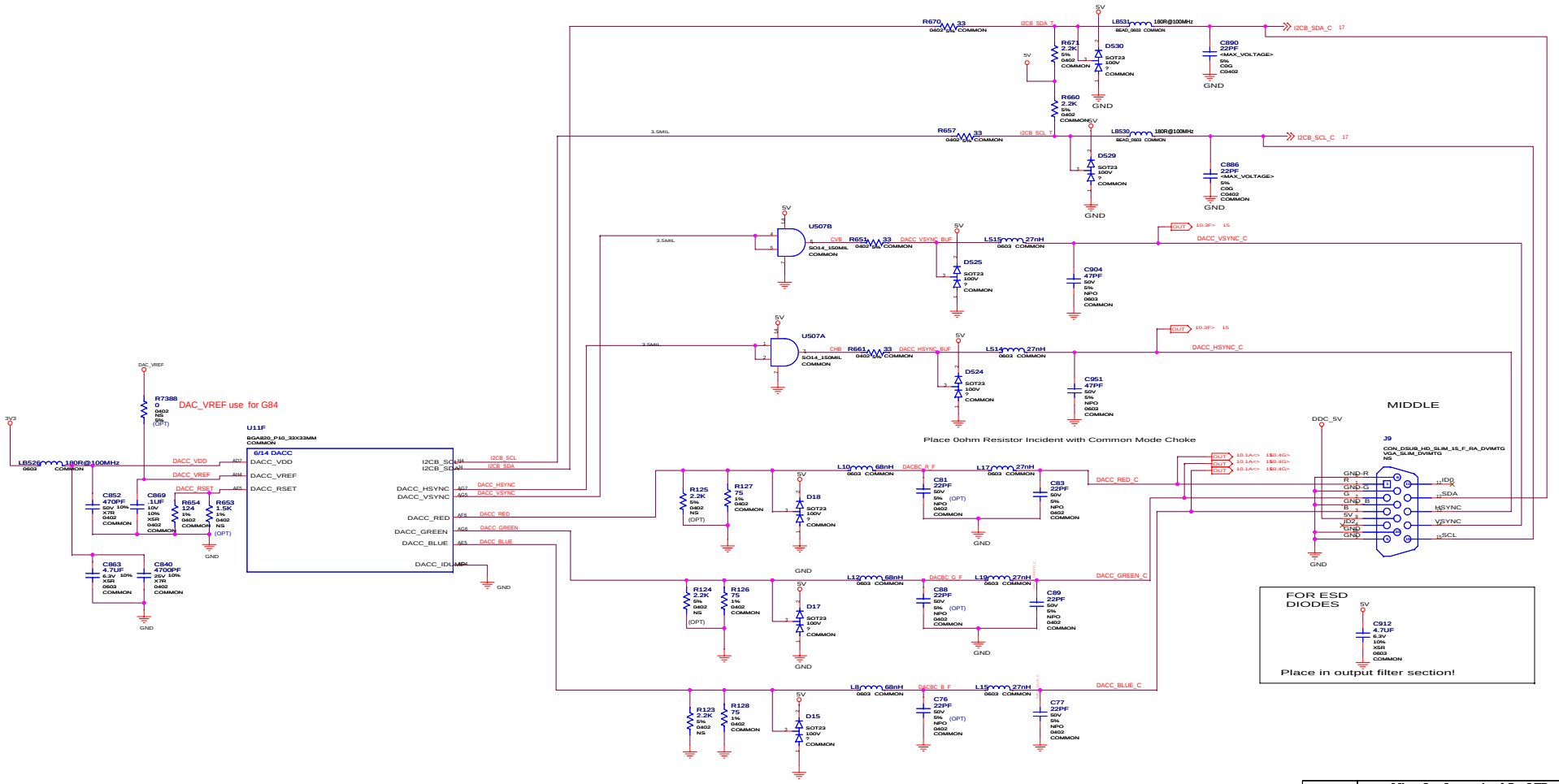

Micro-Star International Co., LTD.	
DACC	
Size: Custom	Document Number: MS-V091
Rev: 100	
Date: Monday, April 02, 2007	Sheet 12 of 23

Primary Display (DACA), Slim DB15

DACA RGB-FILTER

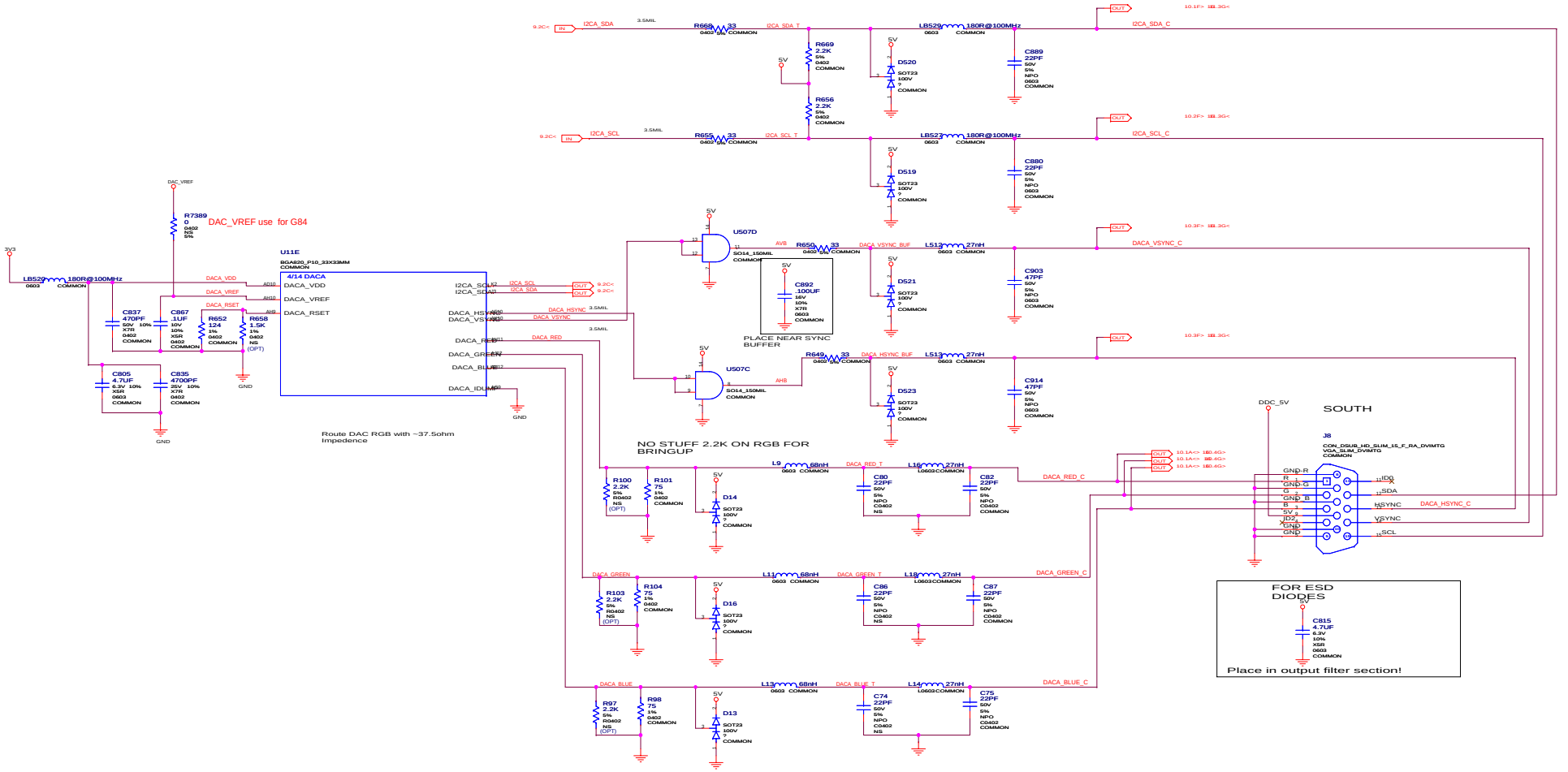

Micro-Star International Co., LTD.	
DACA	
Size: Custom	Document Number: MS-V091
Rev: 100	
Date: Monday, April 02, 2007	Sheet 13 of 23

DACB .. MiniDIN VIDEO IN/OUT CONNECTOR /STEREO GLASSES

FILTER NOTES:

SD: USE L=1.8UH

HD: USE L=?

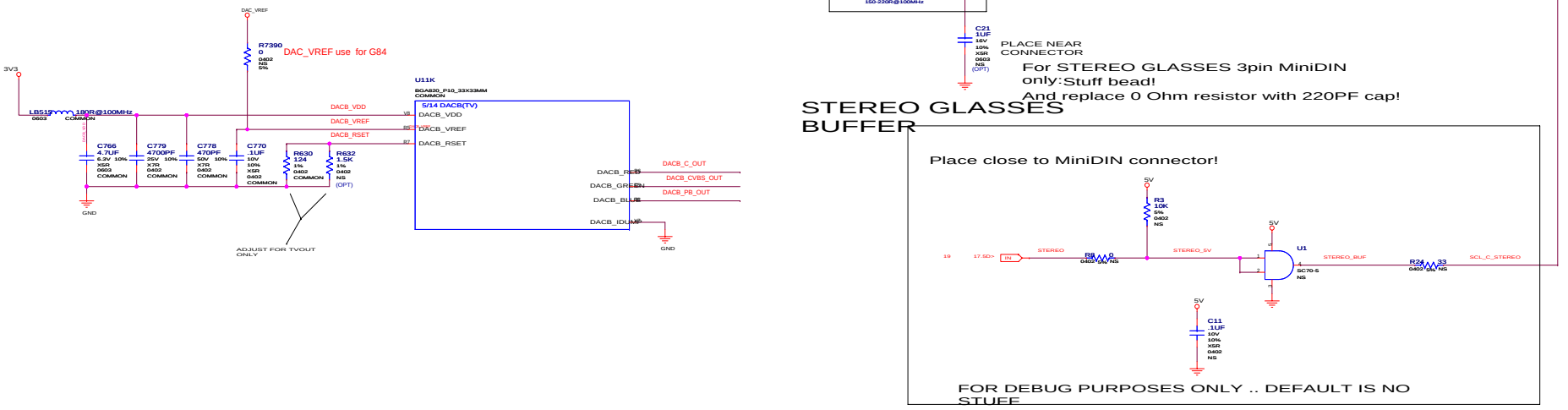

Micro-Star International Co., LTD.	
DACB	
Size: Custom	Document Number: MS-V091
Rev: 100	
Date: Monday, April 02, 2007	Sheet 14 of 23

PHILIPS VIDEO CAPTURE

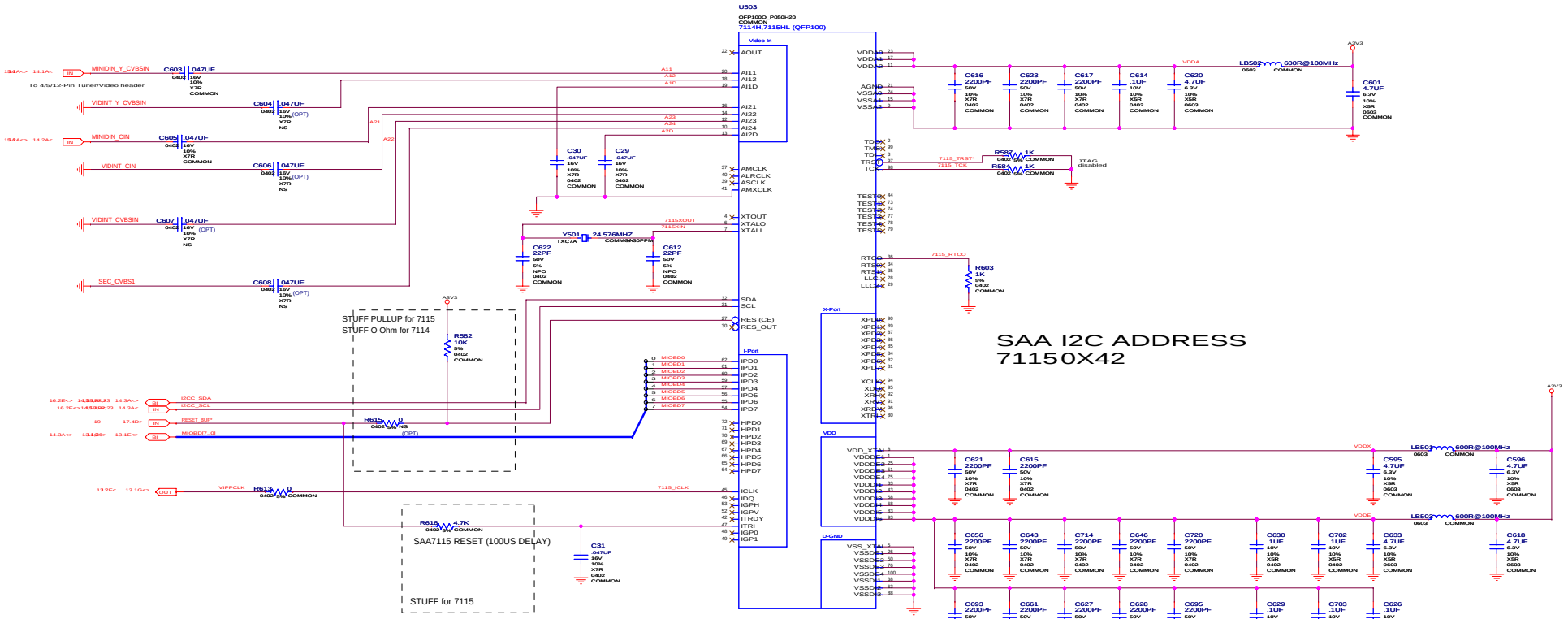

INTERNAL
TMDS .. LINK A
& B

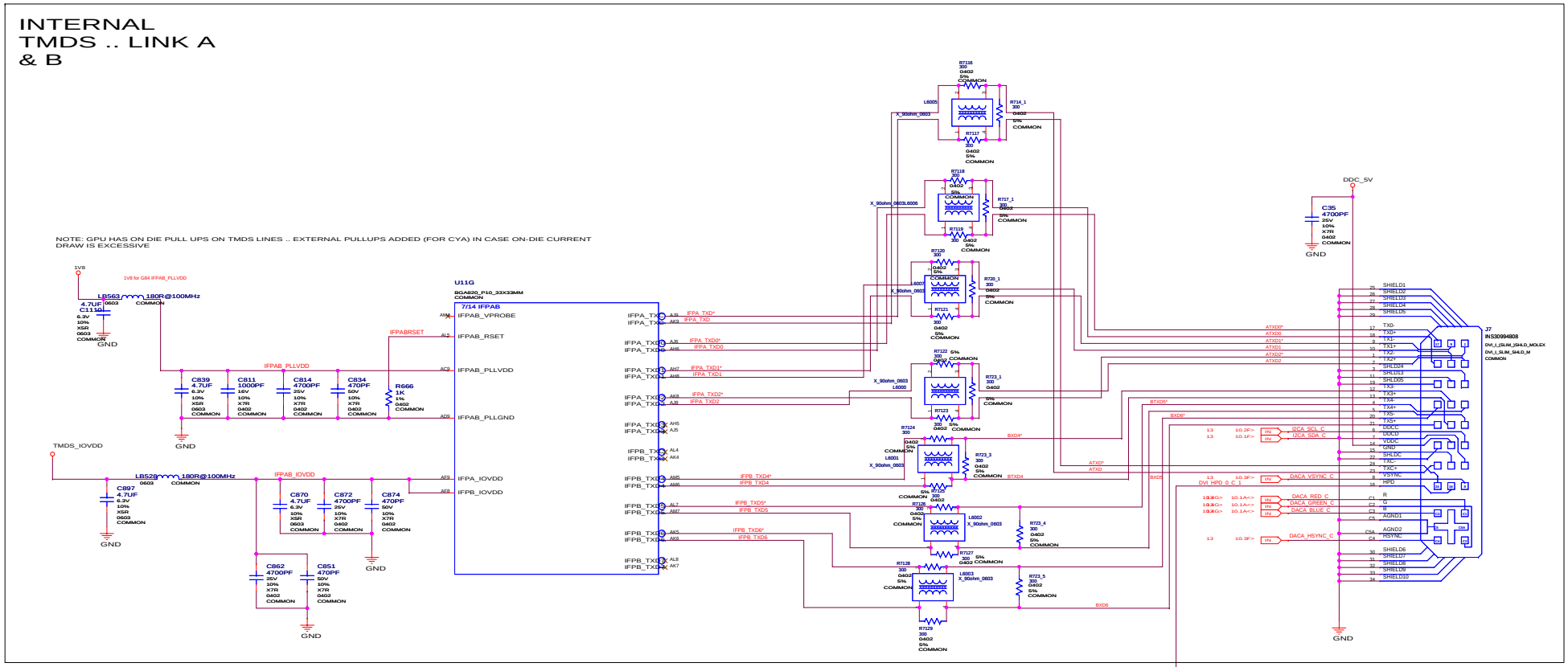

Hotplug Detection

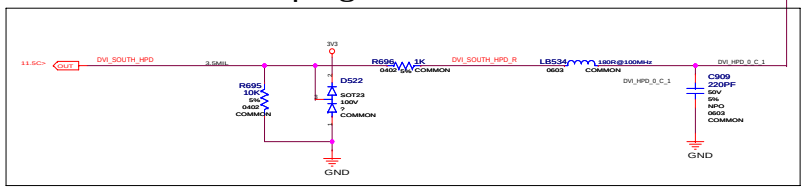

Micro-Star International Co., LTD.	
TMDS LINK A & B	
Size: Custom	Document Number: MS-V089
Rev: 100	
Date: Monday, April 02, 2007	Sheet 16 of 23

INTERNAL TMDS
.. LINK C & D

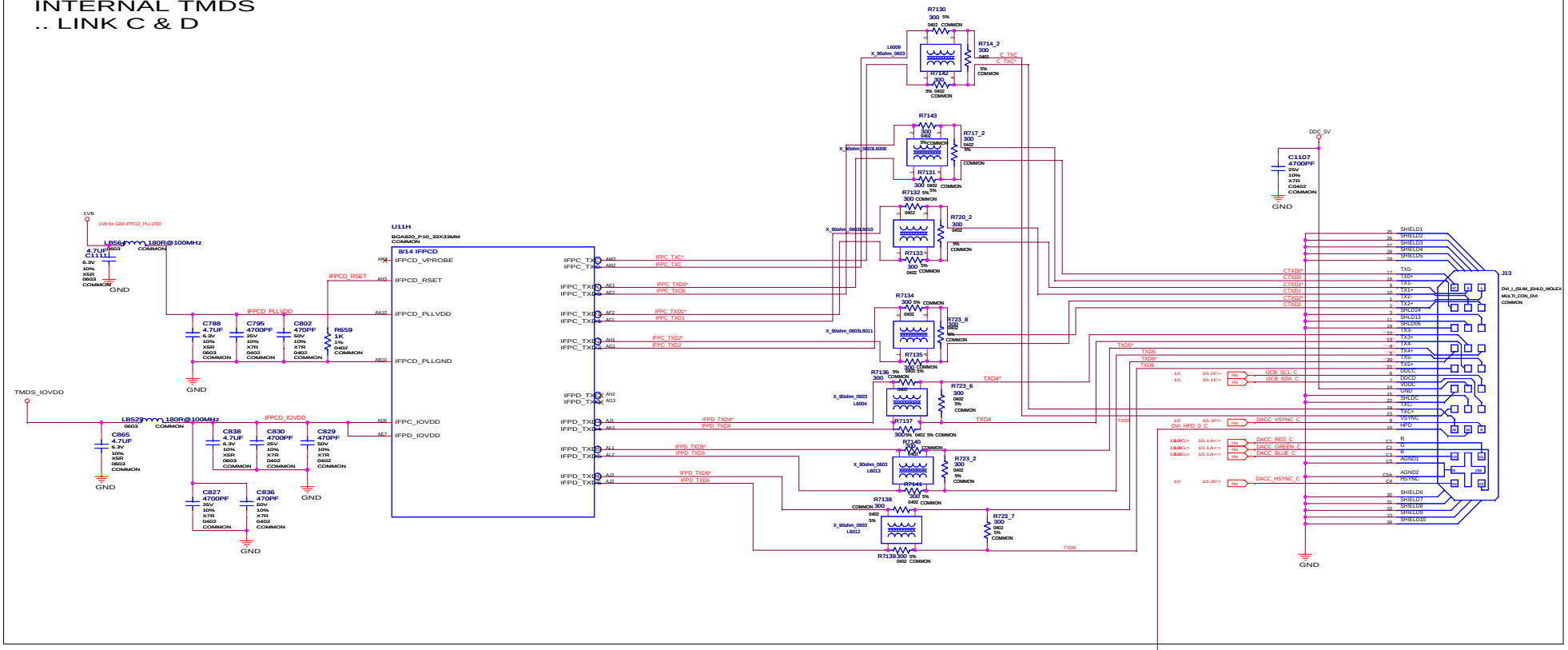

Hotplug Detection

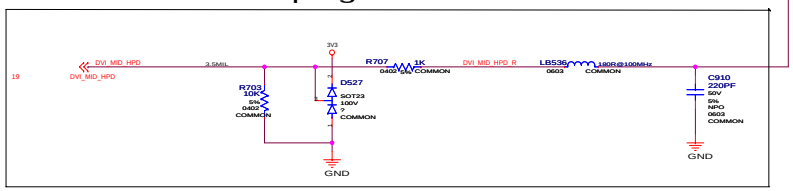

Micro-Star International Co., LTD.	
TMDS LINK C & D	
Size: Custom	Document Number: MS-V089
Rev: 1.00	
Date: Monday, April 02, 2007	Sheet 17 of 23

XTAL/PLLVDD

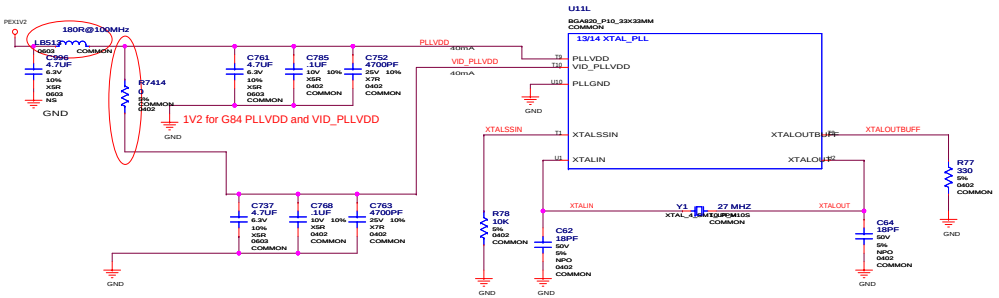

MSI	Micro-Star International Co., LTD.	
	XTAL/SPDIF IN	
Size: Custom	Document Number: MS-V091	Rev: 1.0
Date: Monday, April 02, 2007	Sheet 18 of 23	

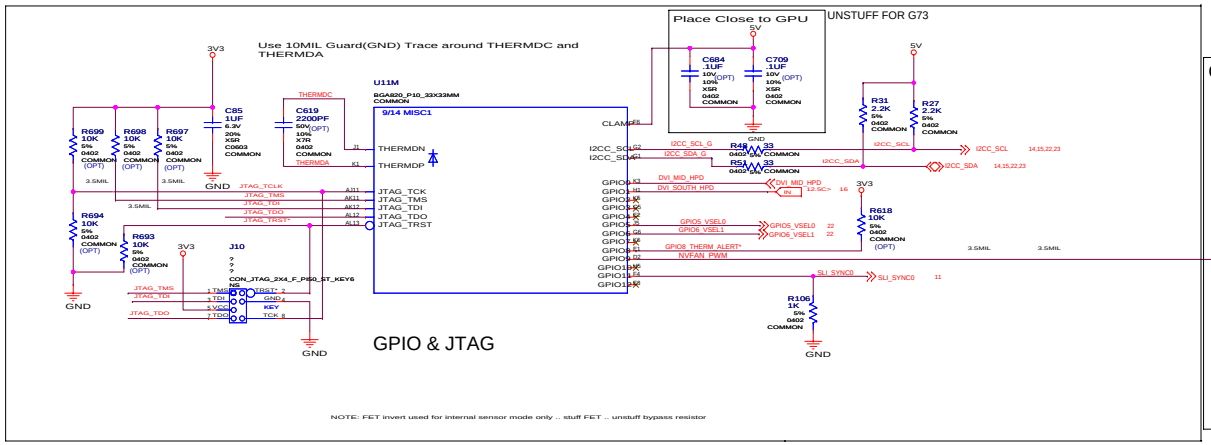

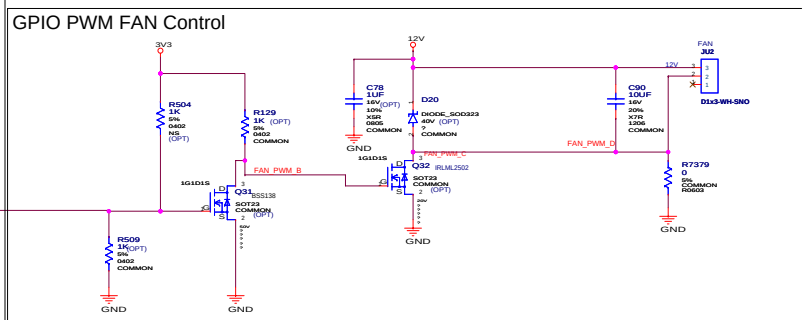

Thermal Protection

3/12 ADD

P-release P402(OPT) 4/4

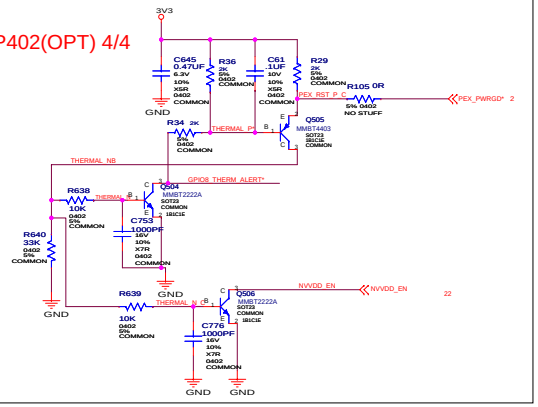

GPIO Assignment Table

GPIO I/O		FUNCTION
0	IN	DVI MID HOTPLUG DET
1	IN	HDMI hotplug
2	IN	RESERVED
3	IN	RESERVED
4	IN	TUNER IRQ
5	OUT	NVVDD VOLTAGE SELECT 0
6	OUT	NVVDD VOLTAGE SELECT 1
7	Out	TPI INTERRUPT ENABLE
8	IN	RESERVED
9	OUT	PWM FAN
10	IN	INT from Sii1930
11	IN	TVRSET
12	IN	uC PROGRAMMING CONTROL

BIOS (serial)

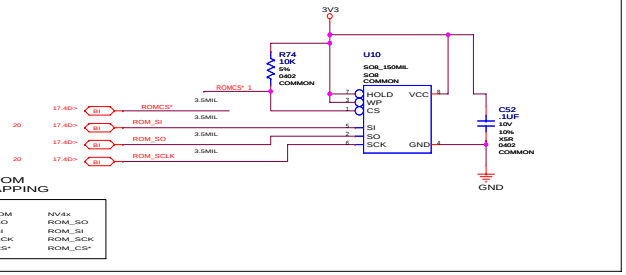

3/13 NEW ADD DUAL VBIOS,LED circuit

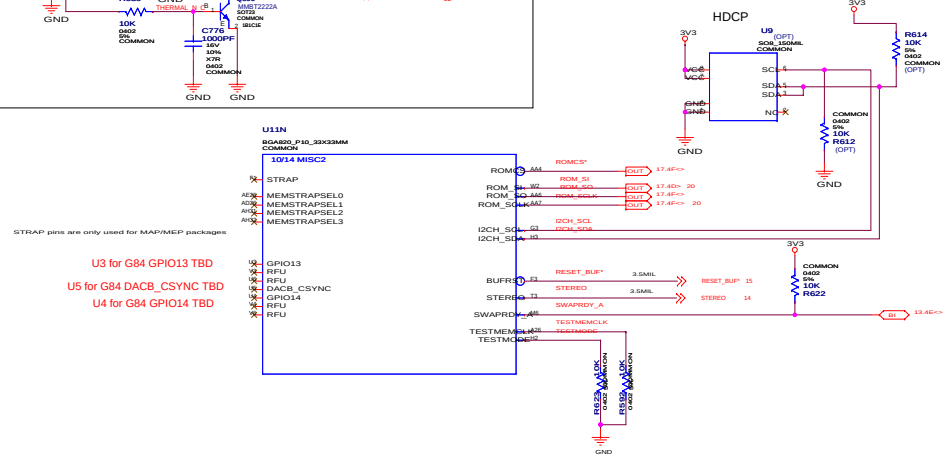

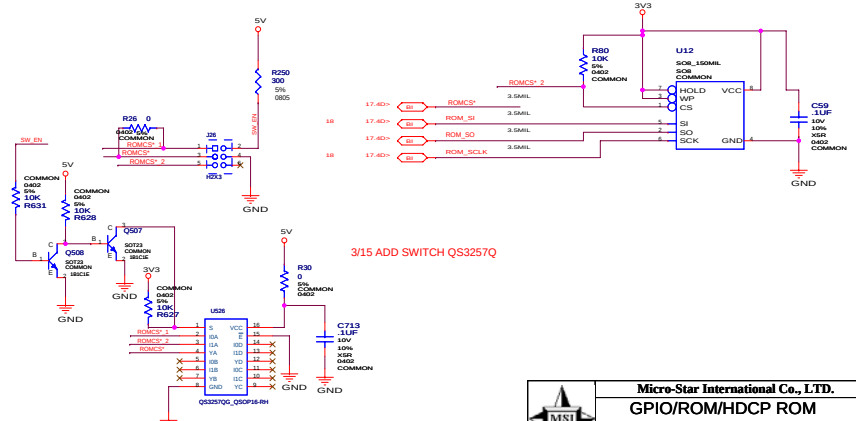

Micro-Star International Co., LTD.	
GPIO/ROM/HDCP ROM	
Size: Custom	Document Number: MS-V091
Rev: 100	
Date: Wednesday, April 04, 2007	Sheet 19 of 23

BIOS, Straps, Misc

Straps

Assembly: BIOS

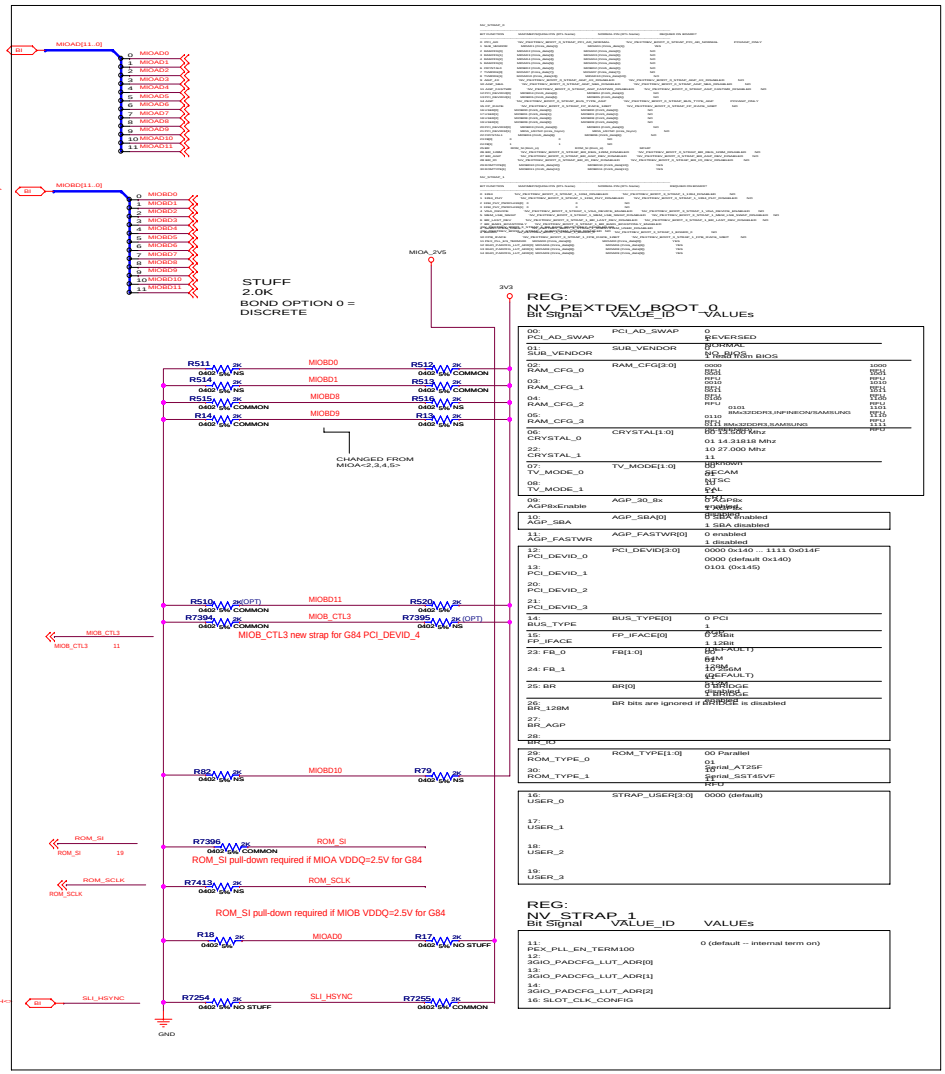

REG:
NV_PEXTDEV_BOOT_0

Bit Signal	VALUE_ID	VALUEs
00: PCI_AD_SWAP	PCI_AD_SWAP	0 REVERSED
01: SUB_VENDOR	SUB_VENDOR	0 NORMAL 1 NO BIOS
02: RAM_CFG_0	RAM_CFG[3:0]	0000 1000 0001 1001 0010 1010 0011 1011 0100 1100 0101 1101 0110 1110 0111 1111
03: RAM_CFG_1		
04: RAM_CFG_2		
05: RAM_CFG_3		
06: CRYSTAL_0	CRYSTAL[1:0]	00 13.5MHz 01 14.31818 Mhz 10 27.000 Mhz 11
07: TV_MODE_0	TV_MODE[1:0]	00 Unknown SECAM NTSC PAL
08: TV_MODE_1		
09: AGP8xEnable	AGP_30_8x	0 AGP8x 1 AGP8x 0 SBA enabled 1 SBA disabled
10: AGP_SBA	AGP_SBA[0]	
11: AGP_FASTWR	AGP_FASTWR[0]	0 enabled 1 disabled
12: PCI_DEVID_0	PCI_DEVID[3:0]	0000 0x140 ... 1111 0x014F 0000 (default 0x140) 0101 (0x145)
13: PCI_DEVID_1		
20: PCI_DEVID_2		
21: PCI_DEVID_3		
14: BUS_TYPE	BUS_TYPE[0]	0 PCI 1
15: FP_IFACE	FP_IFACE[0]	0 24Bit 1 12Bit
23: FB_0	FB[1:0]	00 (DEFAULT) 64M 128M 256M (DEFAULT)
24: FB_1		
25: BR	BR[0]	0 BRIDGE 1 BRIDGE 0 BRIDGE 1 BRIDGE
26: BR_128M	BR bits are ignored if BRIDGE is disabled	
27: BR_AGP		
28: BR_IO		
29: ROM_TYPE_0	ROM_TYPE[1:0]	00 Parallel 01 Serial_AT25F Serial_SST45VF RFU
30: ROM_TYPE_1		
16: USER_0	STRAP_USER[3:0]	0000 (default)
17: USER_1		
18: USER_2		
19: USER_3		

REG:
NV_STRAP_1

Bit Signal	VALUE_ID	VALUEs
11: PEX_PLL_EN_TERM100		0 (default -- internal term on)
12: 3GIO_PADCFG_LUT_ADR[0]		
13: 3GIO_PADCFG_LUT_ADR[1]		
14: 3GIO_PADCFG_LUT_ADR[2]		
16: SLOT_CLK_CONFIG		

Mechanical parts

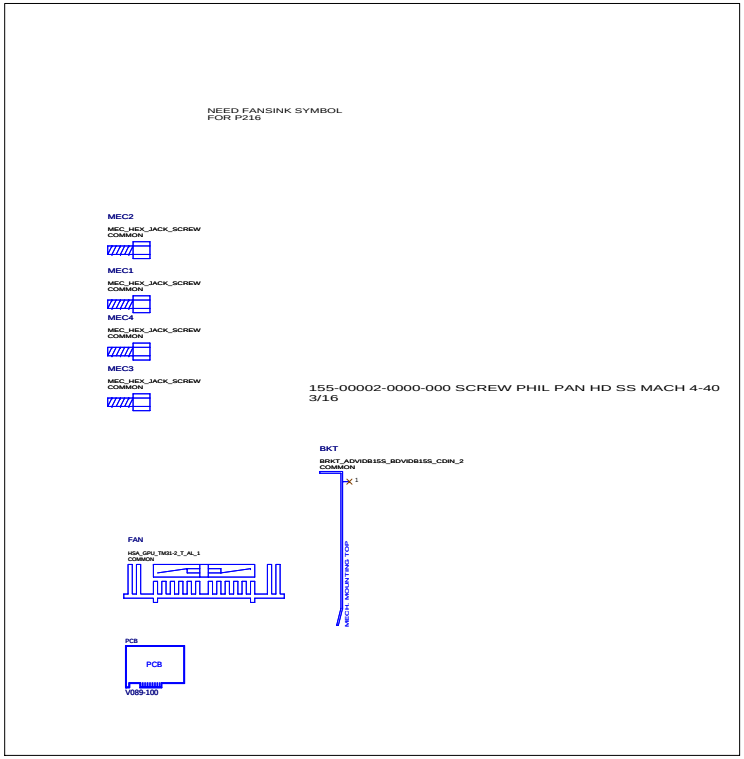

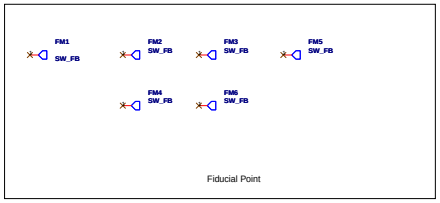

Micro-Star International Co., LTD.

Straps/Mechanical

Size	Document Number	Rev
Custom	MS-V091	100

Date: Monday, April 02, 2007 Sheet 20 of 23

Power Supply TMDS/A3V3

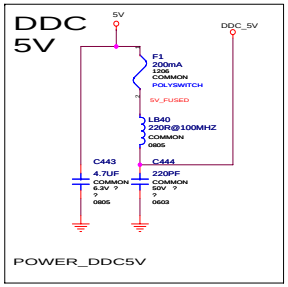

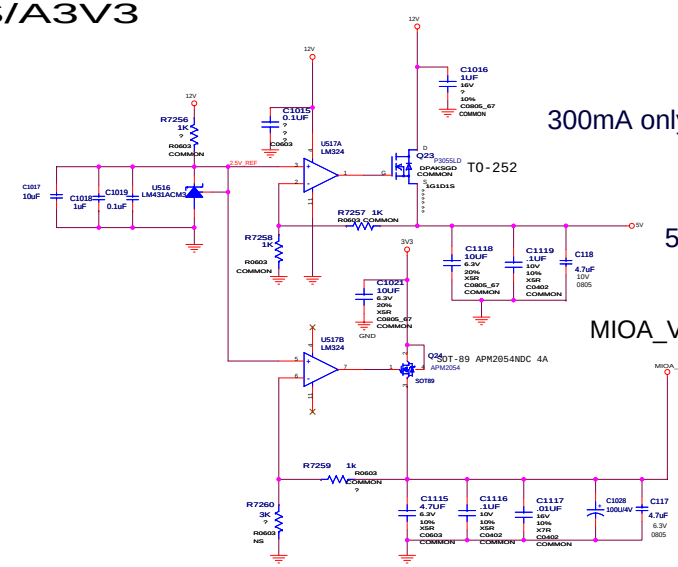

300mA only

5V & A2V5

MIOA_VDDQ 2V5

Vout=2.5V

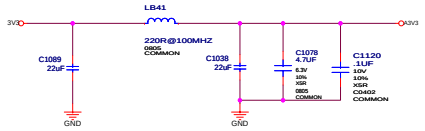

PEX1V2

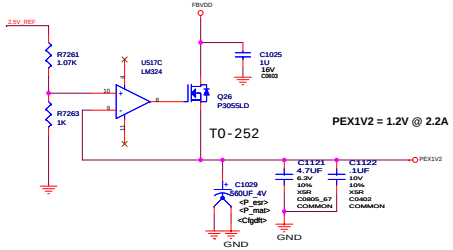

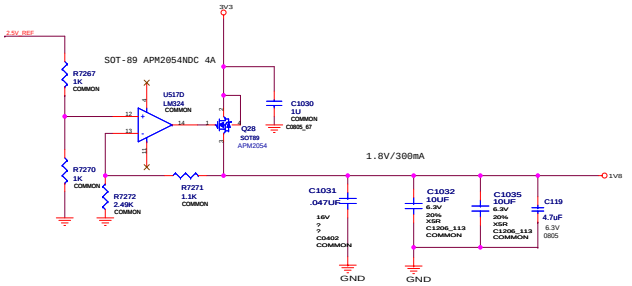

1V8 Supply use for G84 Non-use for G73

Vout=Vref(1+Rtopt/Rbot)

Vout=1.25(1+1.1K/2.49K)=1.8V

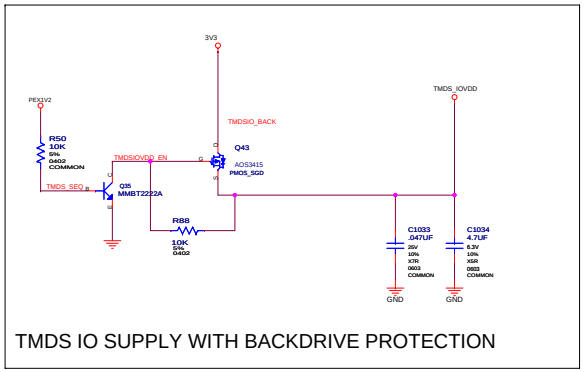

TMDS IO SUPPLY WITH BACKDRIVE PROTECTION

DAC V_REFERENCE SUPPLY for G84

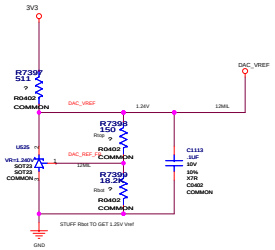

Micro-Star International Co., LTD.		
Linear Power		
Size: Custom	Document Number: MS-V091	Rev: 100
Date: Monday, April 02, 2007	Sheet 21 of 23	

NVVDD

NV_VSEL1	NV_VSEL0	NVVDD
0	0	1.05V
0	1	1.21V (Default)
1	0	1.17V
1	1	1.329V

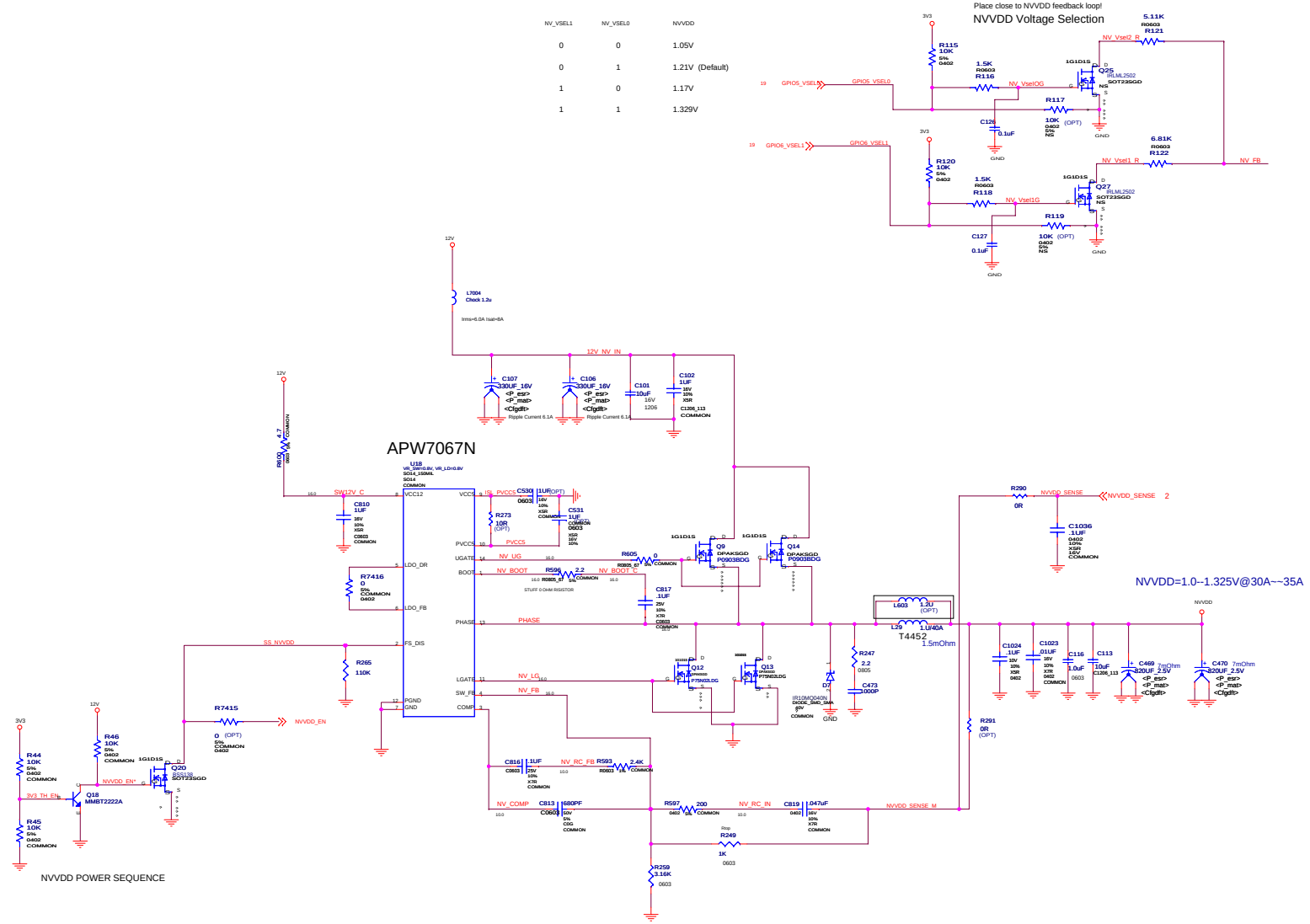

Micro-Star International Co., LTD.

NVVDD

Size: Custom | Document Number: MS-V091 | Rev: 110

Date: Wednesday, April 04, 2007 | Sheet 22 of 23

FBVDD

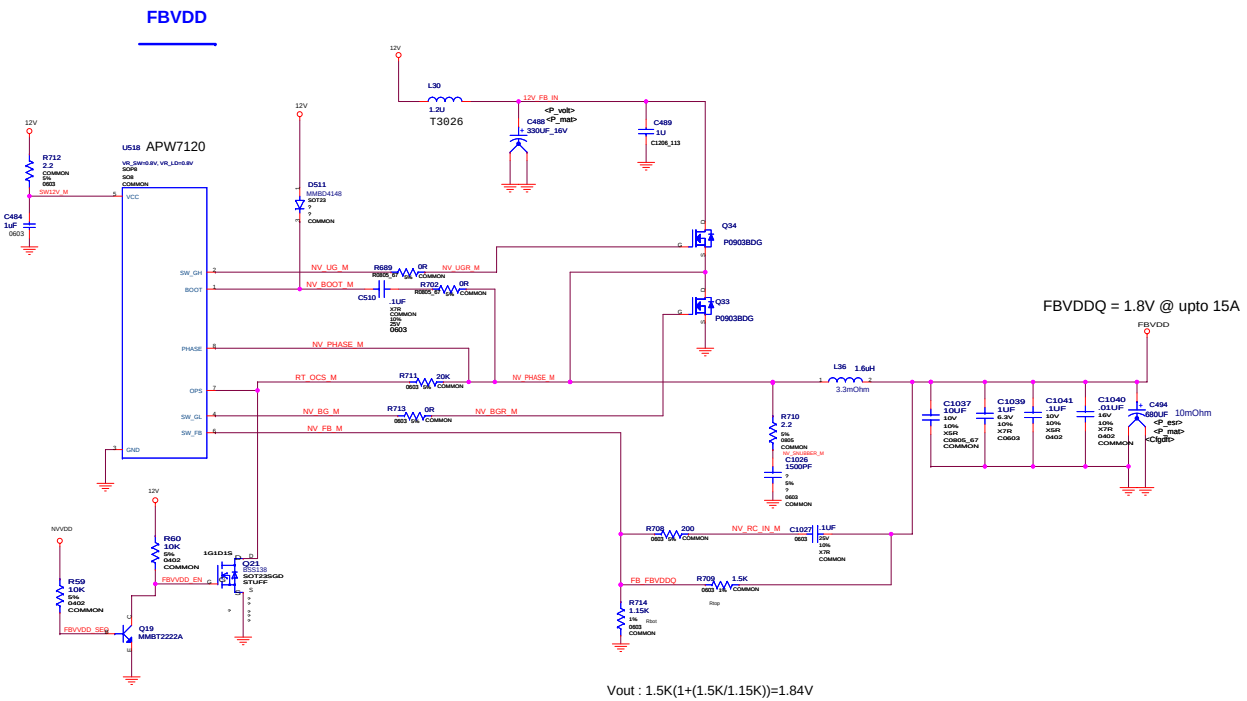

Micro-Star International Co., LTD.		
FBVDD		
Size: Custom	Document Number: MS-V091	Rev: 1.0
Date: Monday, April 02, 2007	Sheet 23 of 23	