P1071: GF108, 1024MB x16 DDR3, DVI+HDMI+VGA

Page 1: Overview

Page 2: Board Block Diagram

Page 3: PCI Express Interface

Page 4: GPU Frame Buffer

Page 5: FBA Partition

Page 6: FBB Partition

Page 7: Memory Decoupling

Page 8: DACA VGA

Page 9: DACB VGA Header

Page 10: TMDS Interface

Page 11: HDMI Interface

Page 12: Unused Interfaces, NVVDD Decoupling

Page 13: XTAL, ROM, JTAG, Misc

Page 14: Straps, Thermal, Mechanical

Page 15: Power Supply I: Misc Power, Thermal Shutdown

Page 16: Power Supply II: FBVDDQ

Page 17: Power Supply III: NVVDD

MSI CONFIDENTIAL
002998O顏鑫 RD(C)20110519002
FOR MB維修課(丁德基) ONLY

SKU	VARIANT	NVPN	ASSEMBLY
B	BASE	600-11071-BASE-SCH	BASE LEVEL GENERIC SCHEMATIC ONLY, COMMON & NO_STUFF ASSEMBLY NOTES AND BOM NOT FINAL
1	SKU0001	600-11071-0001-100	GF108-300-A1 625/1250/900MHz 1024MB/128bit DDR3, DVI-DL+HDMI+VGA
2	SKU0002	600-11071-0002-100	GF108-200-A1 650/1300/900MHz 1024MB/128bit DDR3, DVI-DL+HDMI+VGA
3	<UNDEFINED>	<UNDEFINED>	<UNDEFINED>
4	<UNDEFINED>	<UNDEFINED>	<UNDEFINED>
5	<UNDEFINED>	<UNDEFINED>	<UNDEFINED>
6	<UNDEFINED>	<UNDEFINED>	<UNDEFINED>
7	<UNDEFINED>	<UNDEFINED>	<UNDEFINED>
8	<UNDEFINED>	<UNDEFINED>	<UNDEFINED>
9	<UNDEFINED>	<UNDEFINED>	<UNDEFINED>
10	<UNDEFINED>	<UNDEFINED>	<UNDEFINED>
11	<UNDEFINED>	<UNDEFINED>	<UNDEFINED>
12	<UNDEFINED>	<UNDEFINED>	<UNDEFINED>
13	<UNDEFINED>	<UNDEFINED>	<UNDEFINED>
14	<UNDEFINED>	<UNDEFINED>	<UNDEFINED>
15	<UNDEFINED>	<UNDEFINED>	<UNDEFINED>

ASSEMBLY	BASE LEVEL GENERIC SCHEMATIC ONLY, COMMON & NO_STUFF ASSEMBLY NOTES AND BOM NOT FINAL
PAGE DETAIL	Overview

ALL NVIDIA DESIGN SPECIFICATIONS, REFERENCE SPECIFICATIONS, REFERENCE BOARDS, FILES, DRAWINGS, DIAGNOSTICS, LISTS AND OTHER DOCUMENTS OR INFORMATION (TOGETHER AND SEPARATELY, 'MATERIALS') ARE BEING PROVIDED 'AS IS'. THE MATERIALS MAY CONTAIN KNOWN AND UNKNOWN VIOLATIONS OR DEVIATIONS OF INDUSTRY STANDARDS AND SPECIFICATIONS. NVIDIA MAKES NO WARRANTIES, EXPRESSED, IMPLIED, STATUTORY OR OTHERWISE WITH RESPECT TO THE MATERIALS OR OTHERWISE, AND EXPRESSLY DISCLAIMS ALL IMPLIED WARRANTIES INCLUDING, WITHOUT LIMITATION, THE WARRANTIES OF DESIGN, OF NONINFRINGEMENT, MERCHANTABILITY OR FITNESS FOR A PARTICULAR PURPOSE, OR ARISING FROM A COURSE OF DEALING, TRADE USAGE, TRADE PRACTICE, OR INDUSTRY STANDARDS.

NVIDIA CORPORATION
2701 SAN TOMAS EXPRESSWAY
SANTA CLARA, CA 95050, USA

NV_PN	600-11071-BASE-SCH		
PCB REV	P1071-A01	PAGE	
BOM REV	A	DATE	01-APR-2010

Block Diagram

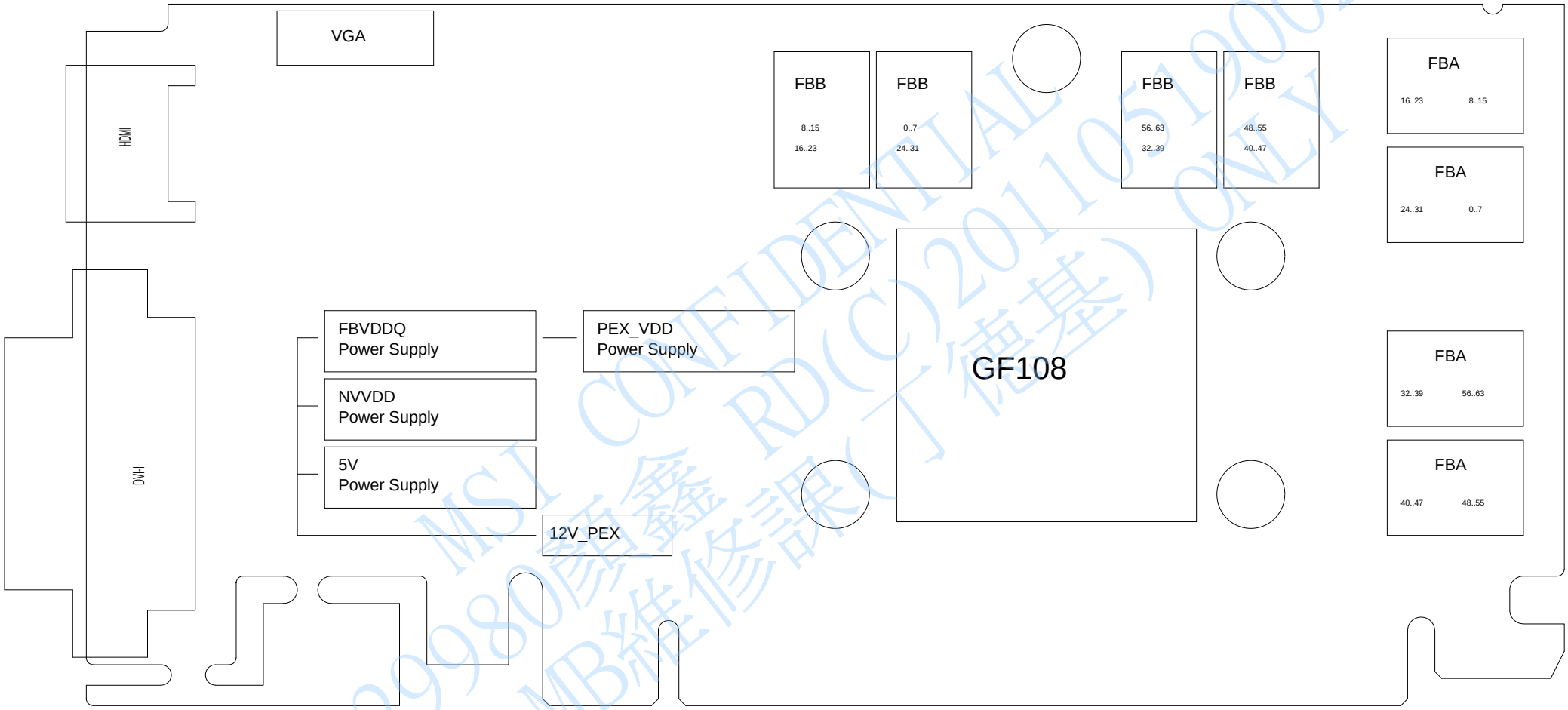

MSI 微星 RD(C)20110519002
002998(微星 內部維修課)
FOR MB維修 ONLY

ASSEMBLY	BASE LEVEL GENERIC SCHEMATIC ONLY, COMMON & NO_STUFF ASSEMBLY NOTES AND BOM NOT FINAL
PAGE DETAIL	Board Block Diagram

ALL NVIDIA DESIGN SPECIFICATIONS, REFERENCE SPECIFICATIONS, REFERENCE BOARDS, FILES, DRAWINGS, DIAGNOSTICS, LISTS AND OTHER DOCUMENTS OR INFORMATION (TOGETHER AND SEPARATELY, 'MATERIALS') ARE BEING PROVIDED 'AS IS'. THE MATERIALS MAY CONTAIN KNOWN AND UNKNOWN VIOLATIONS OR DEVIATIONS OF INDUSTRY STANDARDS AND SPECIFICATIONS. NVIDIA MAKES NO WARRANTIES, EXPRESSED, IMPLIED, STATUTORY OR OTHERWISE WITH RESPECT TO THE MATERIALS OR OTHERWISE, AND EXPRESSLY DISCLAIMS ALL IMPLIED WARRANTIES INCLUDING, WITHOUT LIMITATION, THE WARRANTIES OF DESIGN, OF NONINFRINGEMENT, MERCHANTABILITY OR FITNESS FOR A PARTICULAR PURPOSE, OR ARISING FROM A COURSE OF DEALING, TRADE USAGE, TRADE PRACTICE, OR INDUSTRY STANDARDS.

NVIDIA CORPORATION
2701 SAN TOMAS EXPRESSWAY
SANTA CLARA, CA 95050, USA

NV_PN	600-11071-BASE-SCH		
PCB REV	P1071-A01	PAGE	
BOM REV	A	DATE	01-APR-2010

PCI Express Interface

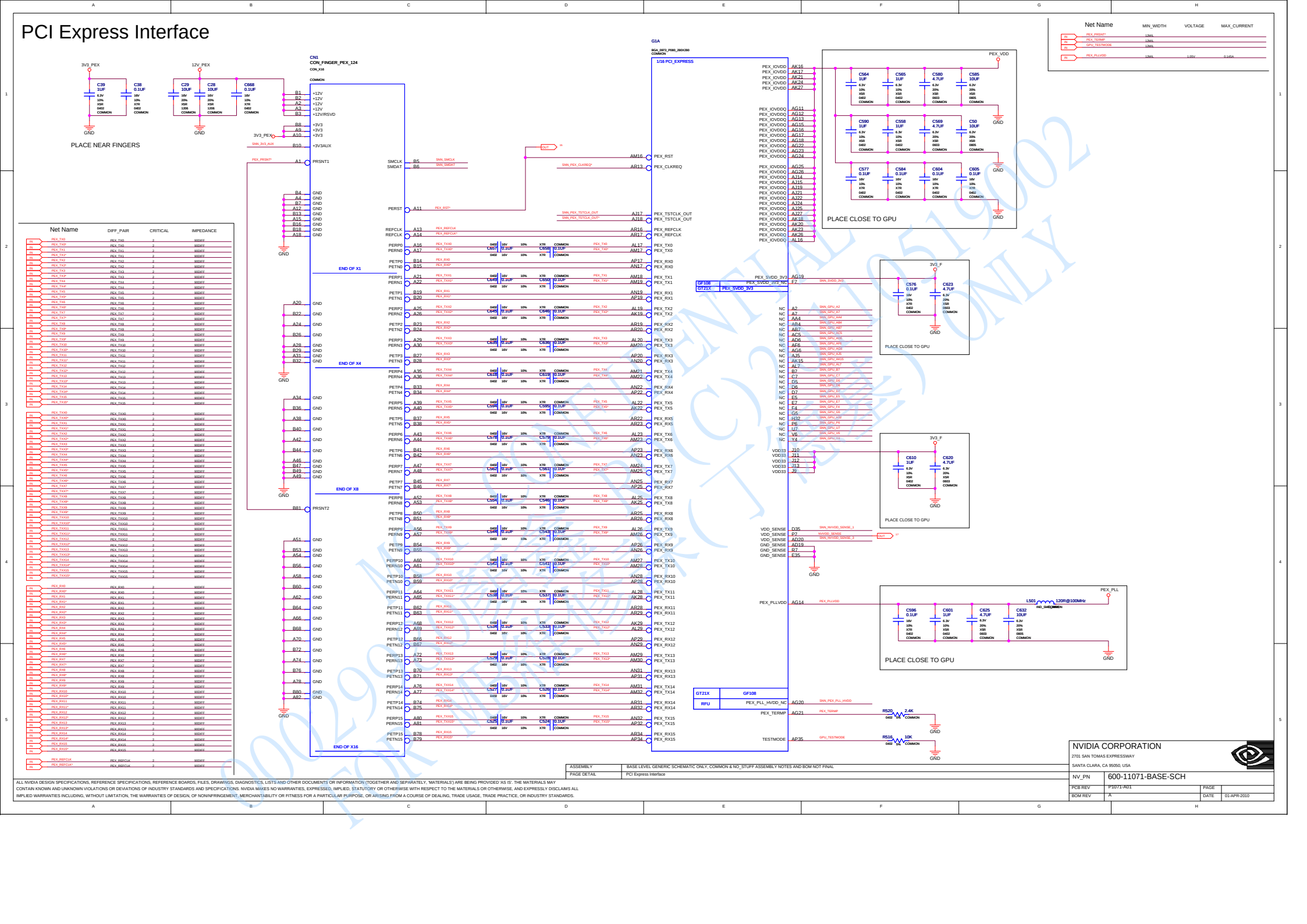

Net Name | DIFF_PAIR | CRITICAL | IMPEDANCE

Net Name | MIN_WIDTH | VOLTAGE | MAX_CURRENT

ALL NVIDIA DESIGN SPECIFICATIONS, REFERENCE SPECIFICATIONS, REFERENCE BOARDS, FILES, DRAWINGS, DIAGNOSTICS, LISTS AND OTHER DOCUMENTS OR INFORMATION (TOGETHER AND SEPARATELY, "MATERIALS") ARE BEING PROVIDED 'AS IS'. THE MATERIALS MAY CONTAIN KNOWN AND UNKNOWN VIOLATIONS OR DEVIATIONS OF INDUSTRY STANDARDS AND SPECIFICATIONS. NVIDIA MAKES NO WARRANTIES, EXPRESSED, IMPLIED, STATUTORY OR OTHERWISE WITH RESPECT TO THE MATERIALS OR OTHERWISE, AND EXPRESSLY DISCLAIMS ALL IMPLIED WARRANTIES INCLUDING, WITHOUT LIMITATION, THE WARRANTIES OF DESIGN, OF NONINFRINGEMENT, MERCHANTABILITY OR FITNESS FOR A PARTICULAR PURPOSE, OR ARISING FROM A COURSE OF DEALING, TRADE USAGE, TRADE PRACTICE, OR INDUSTRY STANDARDS.

CONFIDENTIAL 0029 NVIDIA CORPORATION 2008 FOR INTERNAL USE ONLY

GPU Frame Buffer

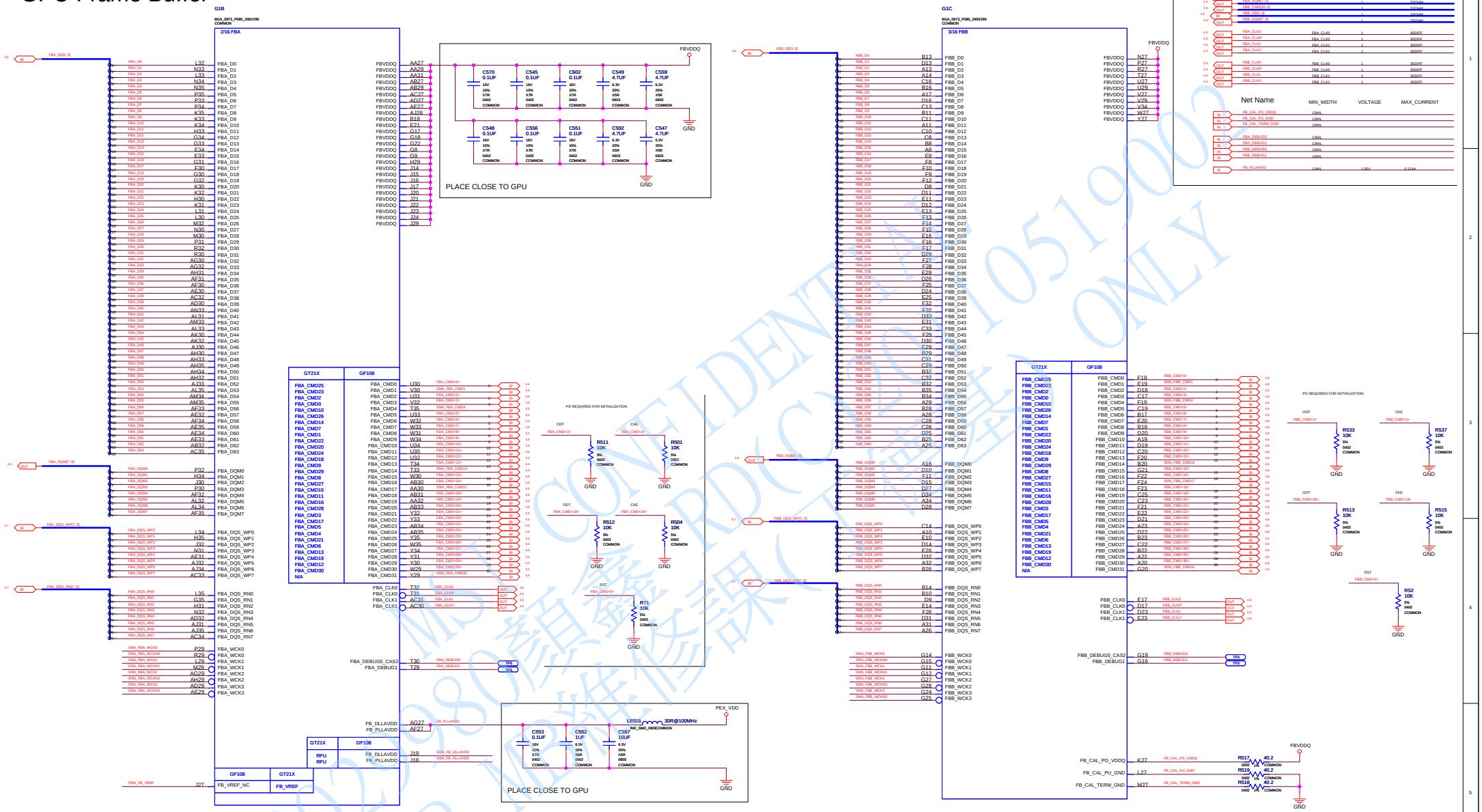

ASSEMBLY	BASE LEVEL GENERIC SCHEMATIC ONLY, COMMON & NO_STUFF ASSEMBLY NOTES AND BOM NOT FINAL
PAGE DETAIL	GPU Frame Buffer

ALL NVIDIA DESIGN SPECIFICATIONS, REFERENCE SPECIFICATIONS, REFERENCE BOARDS, FILES, DRAWINGS, DIAGNOSTICS, LISTS AND OTHER DOCUMENTS OR INFORMATION (TOGETHER AND SEPARATELY, "MATERIALS") ARE BEING PROVIDED "AS IS". THE MATERIALS MAY CONTAIN KNOWN AND UNKNOWN VIOLATIONS OR DEVIATIONS OF INDUSTRY STANDARDS AND SPECIFICATIONS. NVIDIA MAKES NO WARRANTIES, EXPRESSED, IMPLIED, STATUTORY OR OTHERWISE WITH RESPECT TO THE MATERIALS OR OTHERWISE, AND EXPRESSLY DISCLAIMS ALL IMPLIED WARRANTIES INCLUDING, WITHOUT LIMITATION, THE WARRANTIES OF DESIGN, OF NONINFRINGEMENT, MERCHANTABILITY OR FITNESS FOR A PARTICULAR PURPOSE, OR ARISING FROM A COURSE OF DEALING, TRADE USAGE, TRADE PRACTICE, OR INDUSTRY STANDARDS.

NVIDIA CORPORATION
2701 SAN TOMAS EXPRESSWAY
SANTA CLARA, CA 95050, USA

NV_PN	600-11071-BASE-SCH		
PCB REV	P1071-A01	PAGE	
BOM REV	A	DATE	01-APR-2010

CONFIDENTIAL 2010051900
NVIDIA 英伟达 CONFIDENTIAL
FOR NVIDIA 英伟达 ONLY

FBA Partition

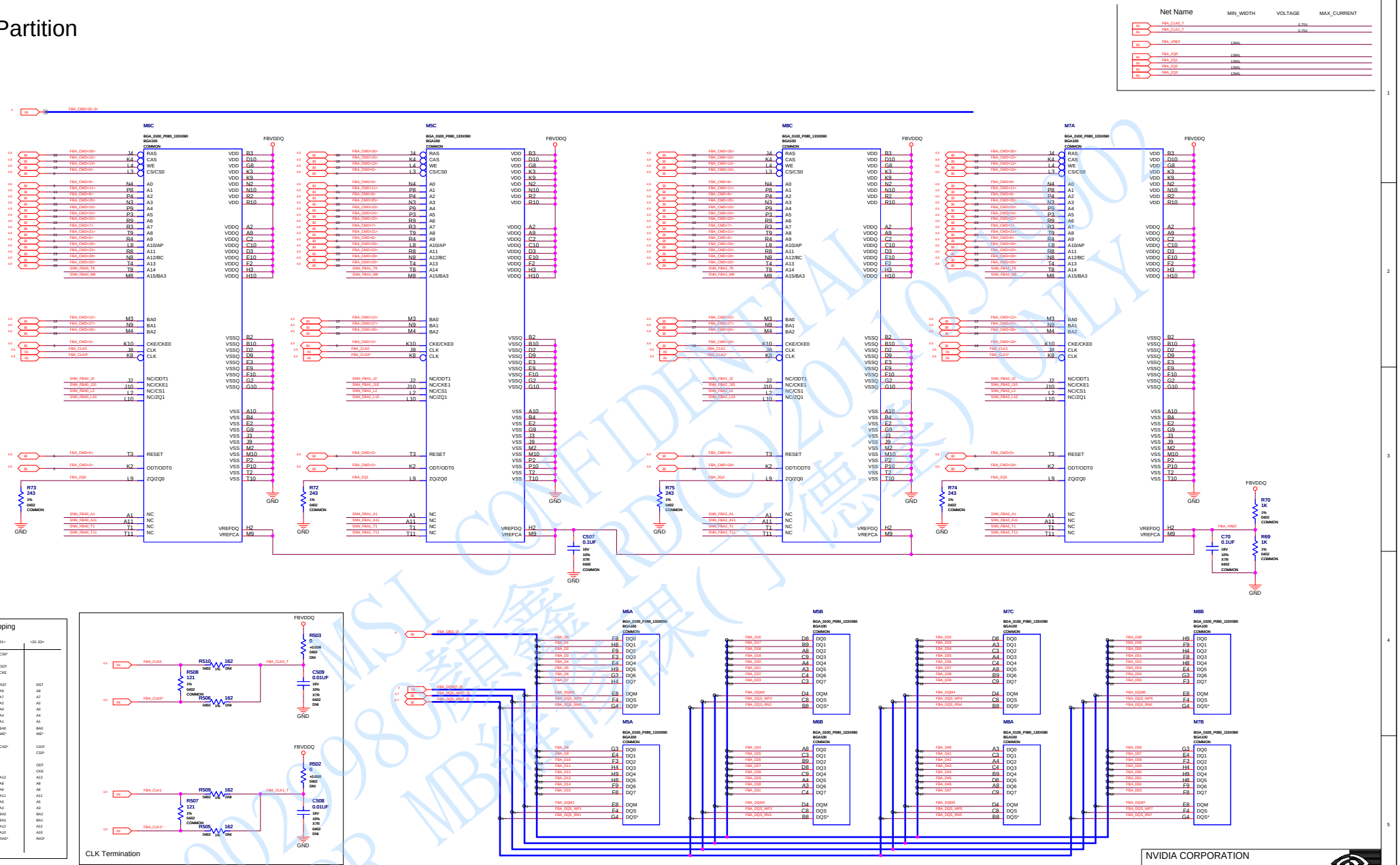

ASSEMBLY	BASE LEVEL GENERIC SCHEMATIC ONLY, COMMON & NO_STUFF ASSEMBLY NOTES AND BOM NOT FINAL
PAGE DETAIL	FBA Partition

NVIDIA CORPORATION
2701 SAN TOMAS EXPRESSWAY
SANTA CLARA, CA 95050, USA

NV_PN	600-11071-BASE-SCH		
PCB REV	P1071-A01	PAGE	
BOM REV	A	DATE	01-APR-2010

ALL NVIDIA DESIGN SPECIFICATIONS, REFERENCE SPECIFICATIONS, REFERENCE BOARDS, FILES, DRAWINGS, DIAGNOSTICS, LISTS AND OTHER DOCUMENTS OR INFORMATION (TOGETHER AND SEPARATELY, 'MATERIALS') ARE BEING PROVIDED 'AS IS'. THE MATERIALS MAY CONTAIN KNOWN AND UNKNOWN VIOLATIONS OR DEVIATIONS OF INDUSTRY STANDARDS AND SPECIFICATIONS. NVIDIA MAKES NO WARRANTIES, EXPRESSED, IMPLIED, STATUTORY OR OTHERWISE WITH RESPECT TO THE MATERIALS OR OTHERWISE, AND EXPRESSLY DISCLAIMS ALL IMPLIED WARRANTIES INCLUDING, WITHOUT LIMITATION, THE WARRANTIES OF DESIGN, OF NONINFRINGEMENT, MERCHANTABILITY OR FITNESS FOR A PARTICULAR PURPOSE, OR ARISING FROM A COURSE OF DEALING, TRADE USAGE, TRADE PRACTICE, OR INDUSTRY STANDARDS.

FBB Partition

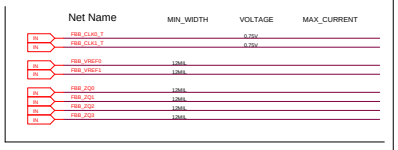

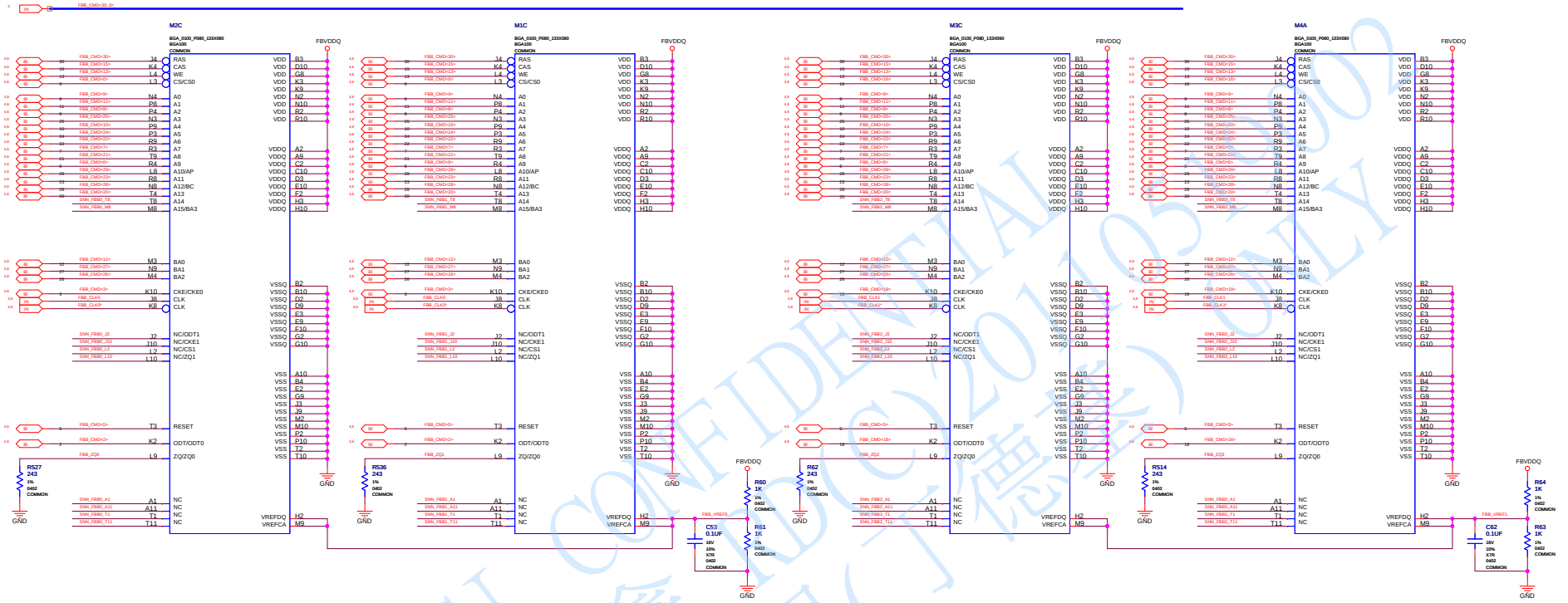

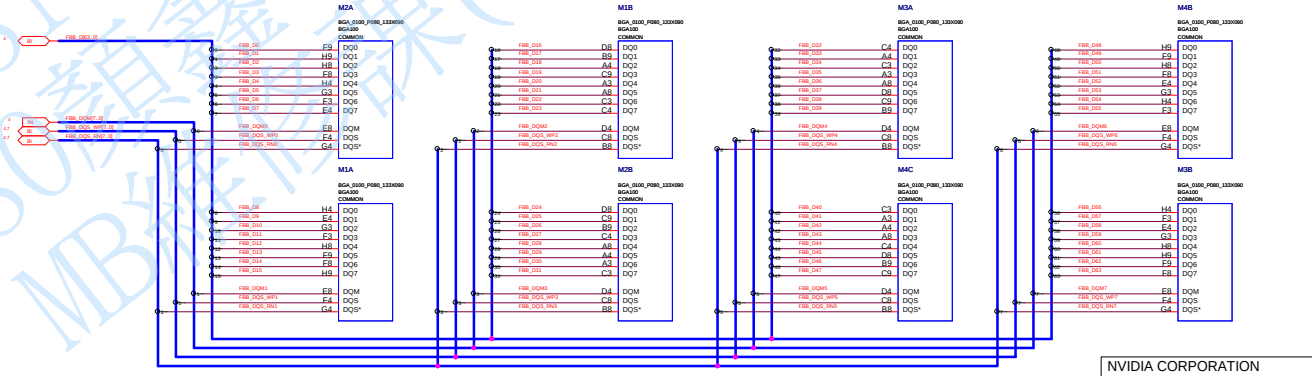

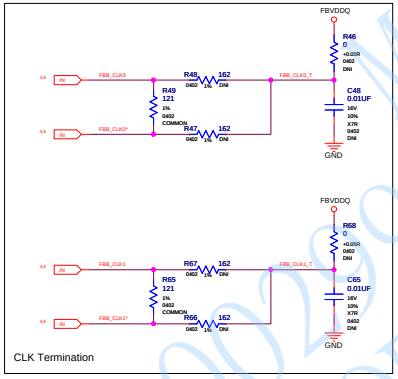

CMD Mapping

CMD	<0..31>	<32..63>
CMD0	CS0*	
CMD1		
CMD2	ODT	
CMD3	CKE	
CMD4		
CMD5	RST	RST
CMD6	A9	A9
CMD7	A7	A7
CMD8	A2	A2
CMD9	A0	A0
CMD10	A4	A4
CMD11	A1	A1
CMD12	BA0	BA0
CMD13	WE*	WE*
CMD14		
CMD15	CAS*	CAS*
CMD16		CS0*
CMD17		
CMD18		ODT
CMD19		CKE
CMD20	A13	A13
CMD21	A8	A8
CMD22	A6	A6
CMD23	A11	A11
CMD24	A5	A5
CMD25	A3	A3
CMD26	BA2	BA2
CMD27	BA1	BA1
CMD28	A12	A12
CMD29	A10	A10
CMD30	RAS*	RAS*
CMD31		

ASSEMBLY	BASE LEVEL GENERIC SCHEMATIC ONLY, COMMON & NO_STUFF ASSEMBLY NOTES AND BOM NOT FINAL
PAGE DETAIL	FBB Partition

NVIDIA CORPORATION
2701 SAN TOMAS EXPRESSWAY
SANTA CLARA, CA 95050, USA

NV_PN	600-11071-BASE-SCH		
PCB REV	P1071-A01	PAGE	
BOM REV	A	DATE	01-APR-2010

ALL NVIDIA DESIGN SPECIFICATIONS, REFERENCE SPECIFICATIONS, REFERENCE BOARDS, FILES, DRAWINGS, DIAGNOSTICS, LISTS AND OTHER DOCUMENTS OR INFORMATION (TOGETHER AND SEPARATELY, 'MATERIALS') ARE BEING PROVIDED 'AS IS'. THE MATERIALS MAY CONTAIN KNOWN AND UNKNOWN VIOLATIONS OR DEVIATIONS OF INDUSTRY STANDARDS AND SPECIFICATIONS. NVIDIA MAKES NO WARRANTIES, EXPRESSED, IMPLIED, STATUTORY OR OTHERWISE WITH RESPECT TO THE MATERIALS OR OTHERWISE, AND EXPRESSLY DISCLAIMS ALL IMPLIED WARRANTIES INCLUDING, WITHOUT LIMITATION, THE WARRANTIES OF DESIGN, OF NONINFRINGEMENT, MERCHANTABILITY OR FITNESS FOR A PARTICULAR PURPOSE, OR ARISING FROM A COURSE OF DEALING, TRADE USAGE, TRADE PRACTICE, OR INDUSTRY STANDARDS.

Memory Decoupling

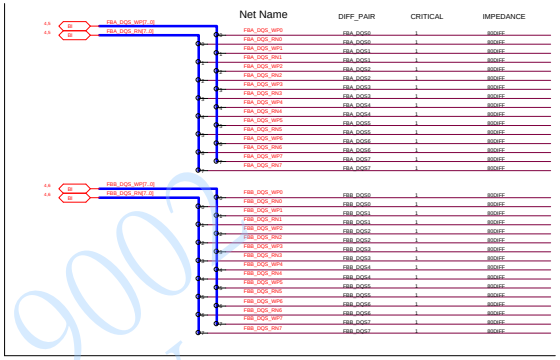

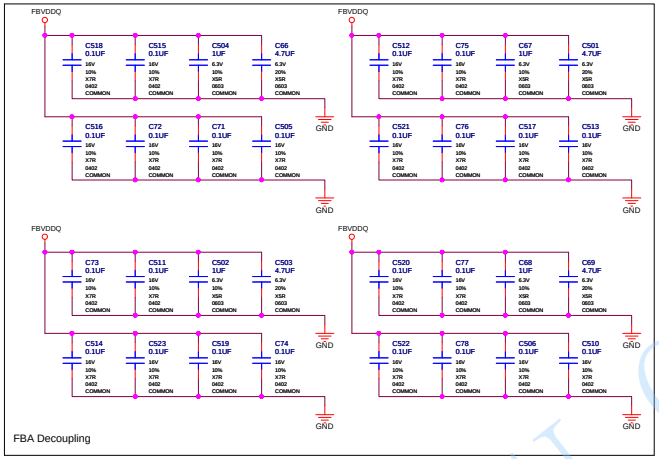

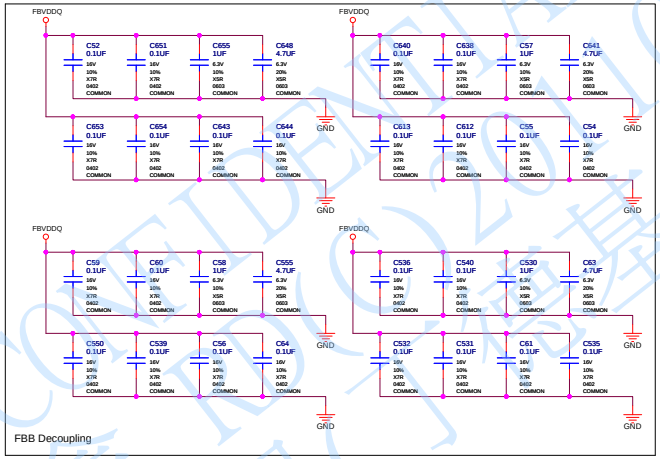

MSI CONFIDENTIAL
002998(鎮鑫 1051900
FOR MB維修課(含保固) ONLY

ASSEMBLY	BASE LEVEL GENERIC SCHEMATIC ONLY, COMMON & NO_STUFF ASSEMBLY NOTES AND BOM NOT FINAL
PAGE DETAIL	Memory Decoupling

ALL NVIDIA DESIGN SPECIFICATIONS, REFERENCE SPECIFICATIONS, REFERENCE BOARDS, FILES, DRAWINGS, DIAGNOSTICS, LISTS AND OTHER DOCUMENTS OR INFORMATION (TOGETHER AND SEPARATELY, "MATERIALS") ARE BEING PROVIDED 'AS IS'. THE MATERIALS MAY CONTAIN KNOWN AND UNKNOWN VIOLATIONS OR DEVIATIONS OF INDUSTRY STANDARDS AND SPECIFICATIONS. NVIDIA MAKES NO WARRANTIES, EXPRESSED, IMPLIED, STATUTORY OR OTHERWISE WITH RESPECT TO THE MATERIALS OR OTHERWISE, AND EXPRESSLY DISCLAIMS ALL IMPLIED WARRANTIES INCLUDING, WITHOUT LIMITATION, THE WARRANTIES OF DESIGN, OF NONINFRINGEMENT, MERCHANTABILITY OR FITNESS FOR A PARTICULAR PURPOSE, OR ARISING FROM A COURSE OF DEALING, TRADE USAGE, TRADE PRACTICE, OR INDUSTRY STANDARDS.

NVIDIA CORPORATION
2701 SAN TOMAS EXPRESSWAY
SANTA CLARA, CA 95050, USA

NV_PN	600-11071-BASE-SCH		
PCB REV	P1071-A01	PAGE	
BOM REV	A	DATE	01-APR-2010

DACA VGA

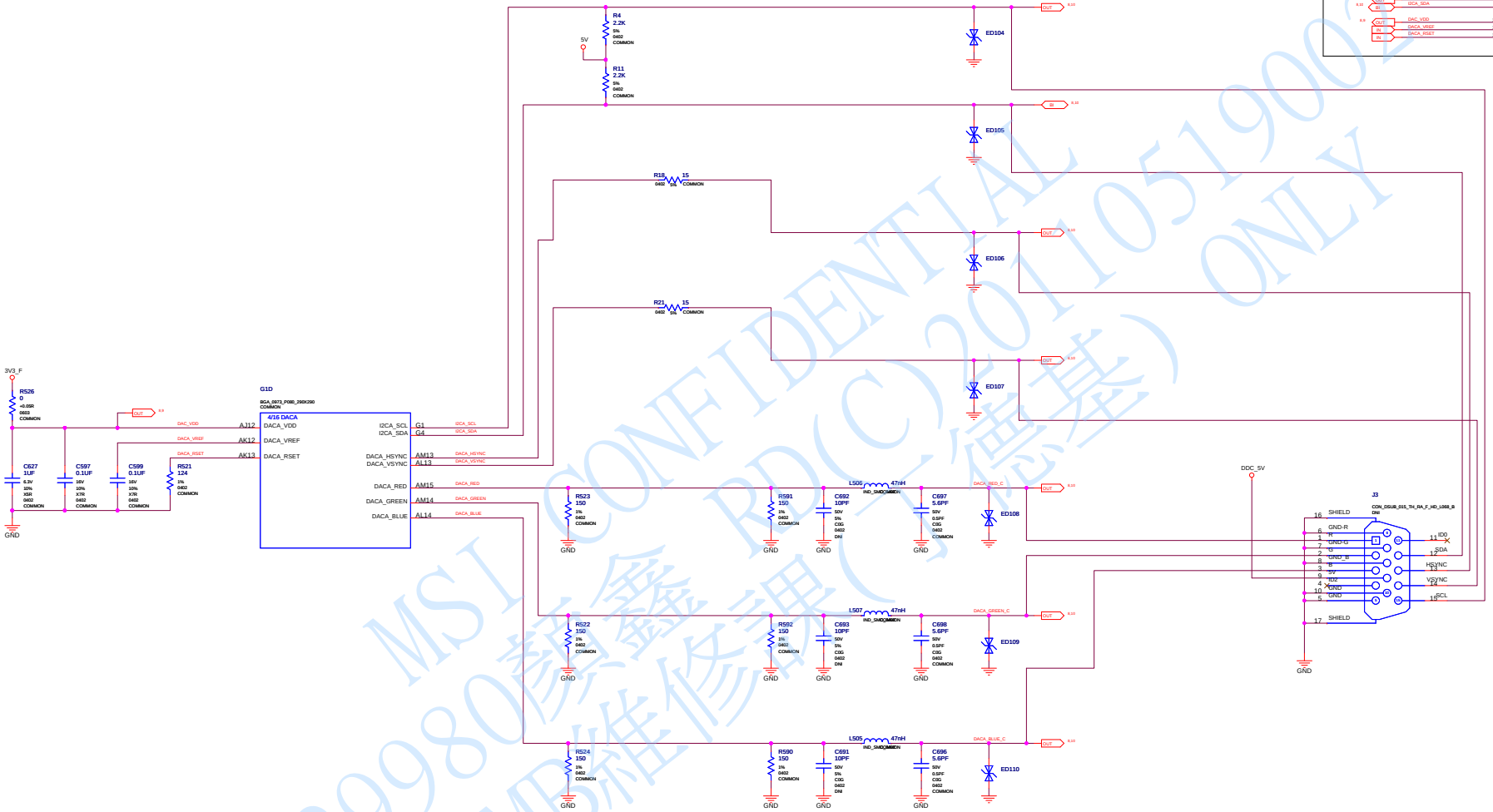

Net Name	DIFF_PAIR	CRITICAL	IMPEDANCE
DACA_RED		1	50OHM
DACA_RED_C		1	50OHM
DACA_GREEN		1	50OHM
DACA_GREEN_C		1	50OHM
DACA_BLUE		1	50OHM
DACA_BLUE_C		1	50OHM
DACA_HSYNC		2	50OHM
DACA_HS_BUF		2	50OHM
DACA_HSYNC_C		2	50OHM
DACA_VSYNC		2	50OHM
DACA_VS_BUF		2	50OHM
DACA_VSYNC_C		2	50OHM

Net Name	MIN_WIDTH	VOLTAGE	MAX_CURRENT
I2CA_SCL			
I2CA_SDA			
DAC_VDD	12MIL		
DACA_VREF	12MIL		
DACA_RSET	12MIL		

MSI 微鑫 RD(C)20110519002980 微鑫课(德基) ONLY FOR MB维修用

ASSEMBLY	BASE LEVEL GENERIC SCHEMATIC ONLY, COMMON & NO_STUFF ASSEMBLY NOTES AND BOM NOT FINAL
PAGE DETAIL	DACA VGA

ALL NVIDIA DESIGN SPECIFICATIONS, REFERENCE SPECIFICATIONS, REFERENCE BOARDS, FILES, DRAWINGS, DIAGNOSTICS, LISTS AND OTHER DOCUMENTS OR INFORMATION (TOGETHER AND SEPARATELY, "MATERIALS") ARE BEING PROVIDED 'AS IS'. THE MATERIALS MAY CONTAIN KNOWN AND UNKNOWN VIOLATIONS OR DEVIATIONS OF INDUSTRY STANDARDS AND SPECIFICATIONS. NVIDIA MAKES NO WARRANTIES, EXPRESSED, IMPLIED, STATUTORY OR OTHERWISE WITH RESPECT TO THE MATERIALS OR OTHERWISE, AND EXPRESSLY DISCLAIMS ALL IMPLIED WARRANTIES INCLUDING, WITHOUT LIMITATION, THE WARRANTIES OF DESIGN, OF NONINFRINGEMENT, MERCHANTABILITY OR FITNESS FOR A PARTICULAR PURPOSE, OR ARISING FROM A COURSE OF DEALING, TRADE USAGE, TRADE PRACTICE, OR INDUSTRY STANDARDS.

NVIDIA CORPORATION
2701 SAN TOMAS EXPRESSWAY
SANTA CLARA, CA 95050, USA

NV_PN	600-11071-BASE-SCH		
PCB REV	P1071-A01	PAGE	
BOM REV	A	DATE	01-APR-2010

DACB VGA Header

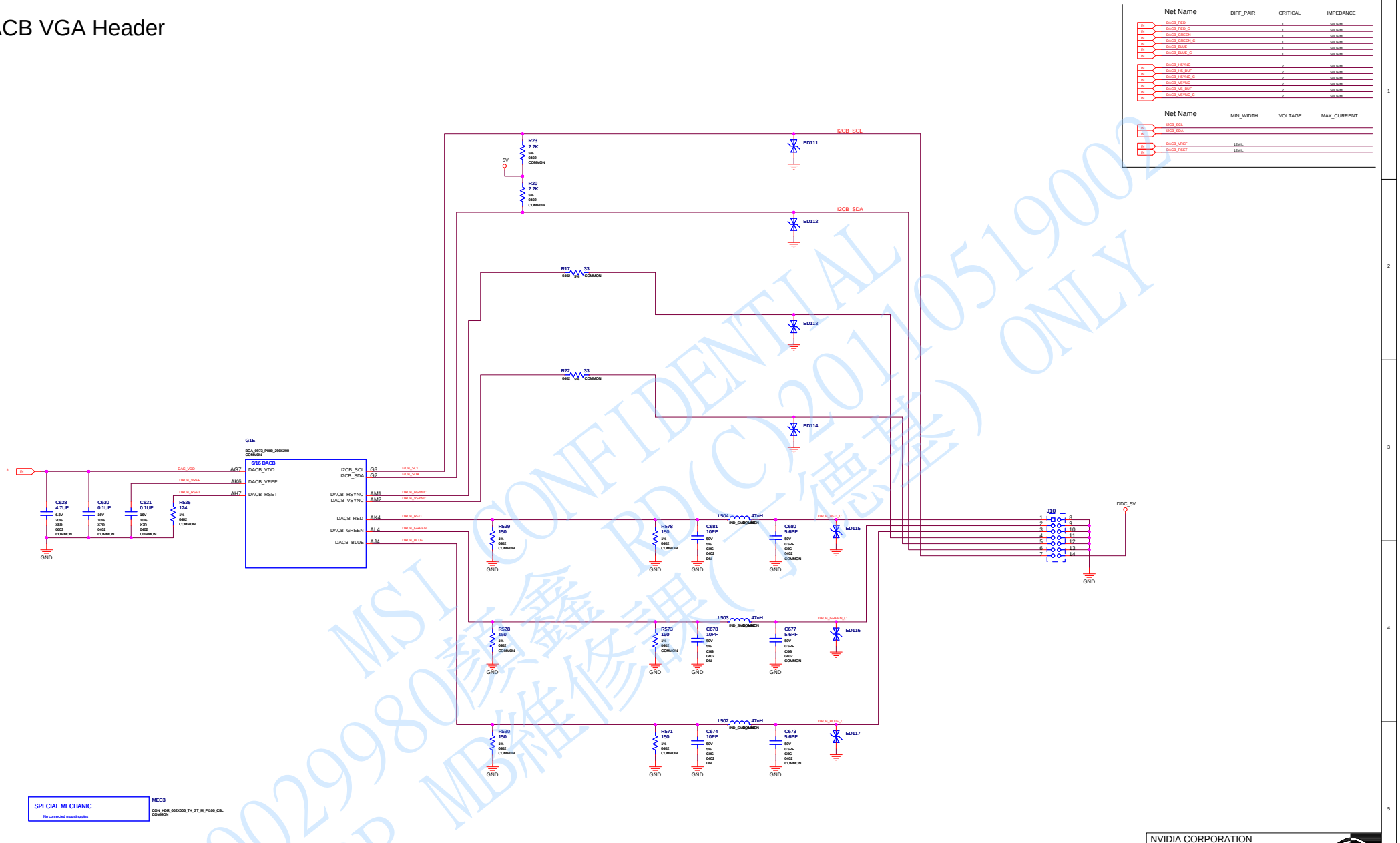

MSI 鑽鑽 CONFIDENTIAL
002998 RDC(2011051900
FOR MB維修用 (德產) ONLY

ASSEMBLY	BASE LEVEL GENERIC SCHEMATIC ONLY, COMMON & NO_STUFF ASSEMBLY NOTES AND BOM NOT FINAL
PAGE DETAIL	DACB VGA Header

ALL NVIDIA DESIGN SPECIFICATIONS, REFERENCE SPECIFICATIONS, REFERENCE BOARDS, FILES, DRAWINGS, DIAGNOSTICS, LISTS AND OTHER DOCUMENTS OR INFORMATION (TOGETHER AND SEPARATELY, "MATERIALS") ARE BEING PROVIDED "AS IS". THE MATERIALS MAY CONTAIN KNOWN AND UNKNOWN VIOLATIONS OR DEVIATIONS OF INDUSTRY STANDARDS AND SPECIFICATIONS. NVIDIA MAKES NO WARRANTIES, EXPRESSED, IMPLIED, STATUTORY OR OTHERWISE WITH RESPECT TO THE MATERIALS OR OTHERWISE, AND EXPRESSLY DISCLAIMS ALL IMPLIED WARRANTIES INCLUDING, WITHOUT LIMITATION, THE WARRANTIES OF DESIGN, OF NONINFRINGEMENT, MERCHANTABILITY OR FITNESS FOR A PARTICULAR PURPOSE, OR ARISING FROM A COURSE OF DEALING, TRADE USAGE, TRADE PRACTICE, OR INDUSTRY STANDARDS.

NVIDIA CORPORATION
2701 SAN TOMAS EXPRESSWAY
SANTA CLARA, CA 95050, USA

NV_PN	600-11071-BASE-SCH		
PCB REV	P1071-A01	PAGE	
BOM REV	A	DATE	01-APR-2010

TMDS Interface

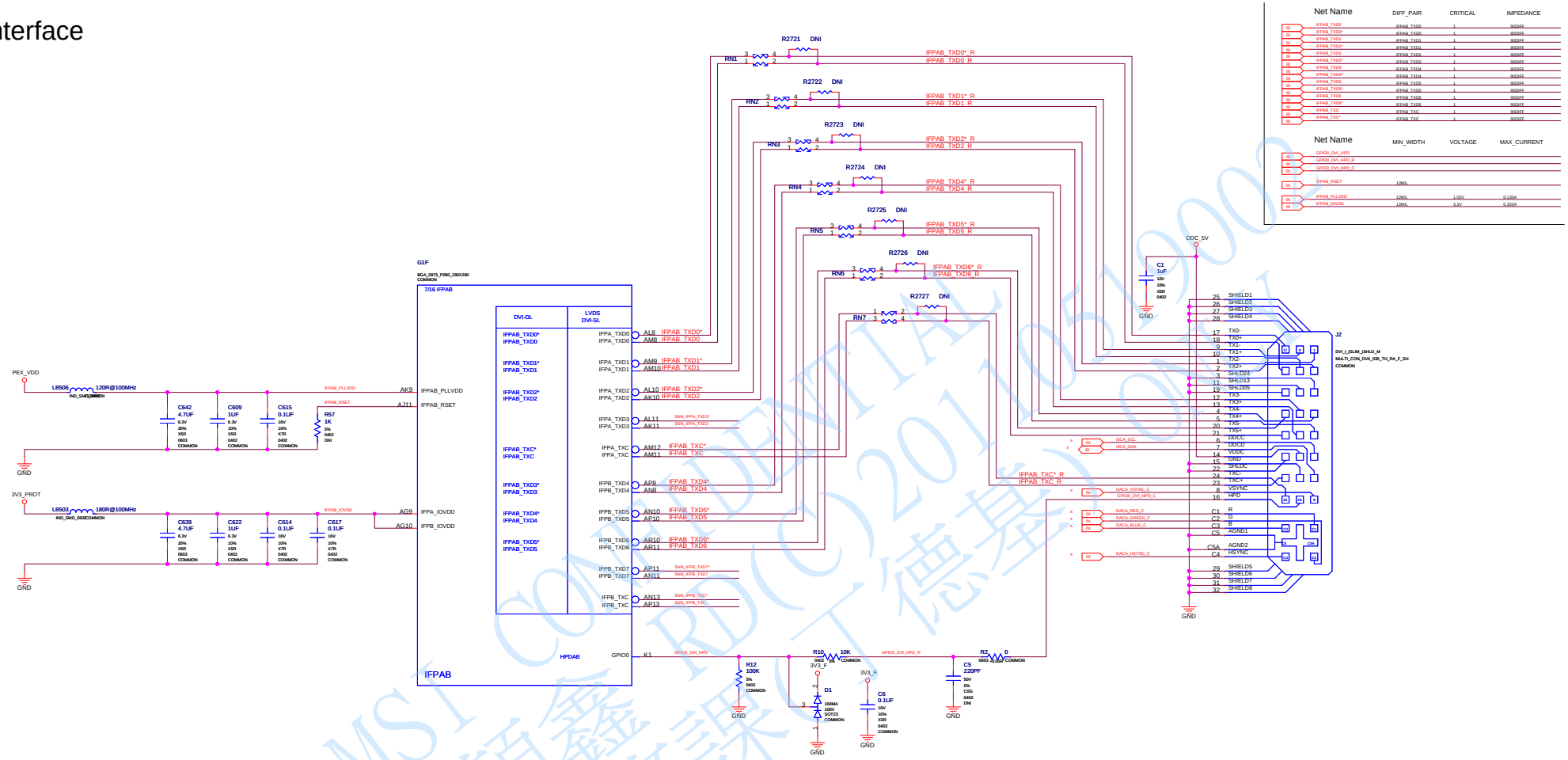

MSI 鑫 COMPUTAL RD(C)2011061900
002998 鑫 RD(C)2011061900
FOR MB維修課 仟德專用

ASSEMBLY	BASE LEVEL GENERIC SCHEMATIC ONLY, COMMON & NO_STUFF ASSEMBLY NOTES AND BOM NOT FINAL
PAGE DETAIL	TMDS Interface

ALL NVIDIA DESIGN SPECIFICATIONS, REFERENCE SPECIFICATIONS, REFERENCE BOARDS, FILES, DRAWINGS, DIAGNOSTICS, LISTS AND OTHER DOCUMENTS OR INFORMATION (TOGETHER AND SEPARATELY, "MATERIALS") ARE BEING PROVIDED 'AS IS'. THE MATERIALS MAY CONTAIN KNOWN AND UNKNOWN VIOLATIONS OR DEVIATIONS OF INDUSTRY STANDARDS AND SPECIFICATIONS. NVIDIA MAKES NO WARRANTIES, EXPRESSED, IMPLIED, STATUTORY OR OTHERWISE WITH RESPECT TO THE MATERIALS OR OTHERWISE, AND EXPRESSLY DISCLAIMS ALL IMPLIED WARRANTIES INCLUDING, WITHOUT LIMITATION, THE WARRANTIES OF DESIGN, OF NONINFRINGEMENT, MERCHANTABILITY OR FITNESS FOR A PARTICULAR PURPOSE, OR ARISING FROM A COURSE OF DEALING, TRADE USAGE, TRADE PRACTICE, OR INDUSTRY STANDARDS.

NVIDIA CORPORATION
2701 SAN TOMAS EXPRESSWAY
SANTA CLARA, CA 95050, USA

NV_PN	600-11071-BASE-SCH		
PCB REV	P1071-A01	PAGE	
BOM REV	A	DATE	01-APR-2010

HDMI Interface

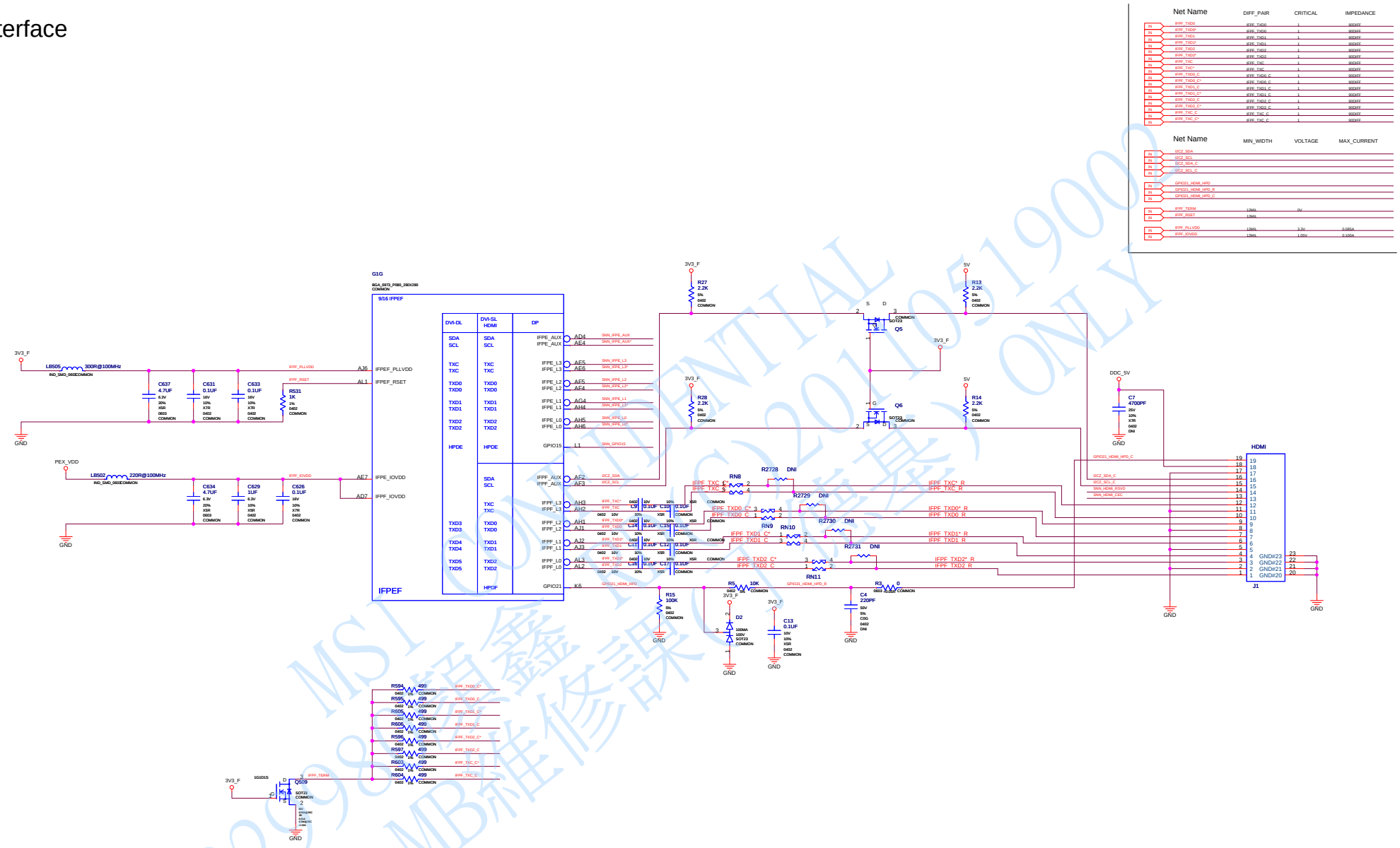

MSI CONFIDENTIAL 2011/05/19
00029 for MB維修課(僅供參考) ONLY

ASSEMBLY	BASE LEVEL GENERIC SCHEMATIC ONLY, COMMON & NO_STUFF ASSEMBLY NOTES AND BOM NOT FINAL
PAGE DETAIL	HDMI Interface

ALL NVIDIA DESIGN SPECIFICATIONS, REFERENCE SPECIFICATIONS, REFERENCE BOARDS, FILES, DRAWINGS, DIAGNOSTICS, LISTS AND OTHER DOCUMENTS OR INFORMATION (TOGETHER AND SEPARATELY, "MATERIALS") ARE BEING PROVIDED 'AS IS'. THE MATERIALS MAY CONTAIN KNOWN AND UNKNOWN VIOLATIONS OR DEVIATIONS OF INDUSTRY STANDARDS AND SPECIFICATIONS. NVIDIA MAKES NO WARRANTIES, EXPRESSED, IMPLIED, STATUTORY OR OTHERWISE WITH RESPECT TO THE MATERIALS OR OTHERWISE, AND EXPRESSLY DISCLAIMS ALL IMPLIED WARRANTIES INCLUDING, WITHOUT LIMITATION, THE WARRANTIES OF DESIGN, OF NONINFRINGEMENT, MERCHANTABILITY OR FITNESS FOR A PARTICULAR PURPOSE, OR ARISING FROM A COURSE OF DEALING, TRADE USAGE, TRADE PRACTICE, OR INDUSTRY STANDARDS.

NVIDIA CORPORATION
2701 SAN TOMAS EXPRESSWAY
SANTA CLARA, CA 95050, USA

NV_PN	600-11071-BASE-SCH		
PCB REV	P1071-A01	PAGE	
BOM REV	A	DATE	01-APR-2010

Unused Interfaces, NVVDD Decoupling

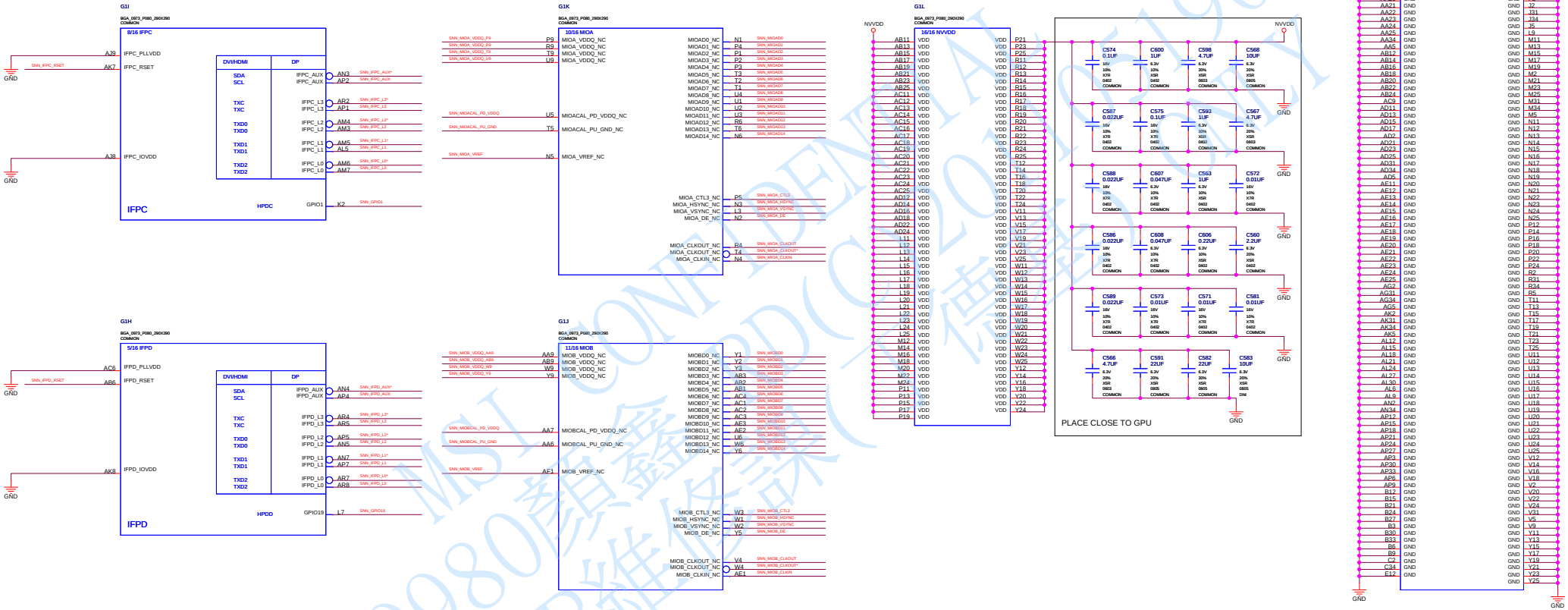

ASSEMBLY	BASE LEVEL GENERIC SCHEMATIC ONLY, COMMON & NO_STUFF ASSEMBLY NOTES AND BOM NOT FINAL
PAGE DETAIL	Unused Interfaces, NVVDD Decoupling

ALL NVIDIA DESIGN SPECIFICATIONS, REFERENCE SPECIFICATIONS, REFERENCE BOARDS, FILES, DRAWINGS, DIAGNOSTICS, LISTS AND OTHER DOCUMENTS OR INFORMATION (TOGETHER AND SEPARATELY, "MATERIALS") ARE BEING PROVIDED 'AS IS'. THE MATERIALS MAY CONTAIN KNOWN AND UNKNOWN VIOLATIONS OR DEVIATIONS OF INDUSTRY STANDARDS AND SPECIFICATIONS. NVIDIA MAKES NO WARRANTIES, EXPRESSED, IMPLIED, STATUTORY OR OTHERWISE WITH RESPECT TO THE MATERIALS OR OTHERWISE, AND EXPRESSLY DISCLAIMS ALL IMPLIED WARRANTIES INCLUDING, WITHOUT LIMITATION, THE WARRANTIES OF DESIGN, OF NONINFRINGEMENT, MERCHANTABILITY OR FITNESS FOR A PARTICULAR PURPOSE, OR ARISING FROM A COURSE OF DEALING, TRADE USAGE, TRADE PRACTICE, OR INDUSTRY STANDARDS.

NVIDIA CORPORATION
2701 SAN TOMAS EXPRESSWAY
SANTA CLARA, CA 95050, USA

NV_PN	600-11071-BASE-SCH		
PCB REV	P1071-A01	PAGE	
BOM REV	A	DATE	01-APR-2010

MSI CONFIDENTIAL 002998 FOR MB维修资料 2019/11/02

XTAL, ROM, JTAG, Misc

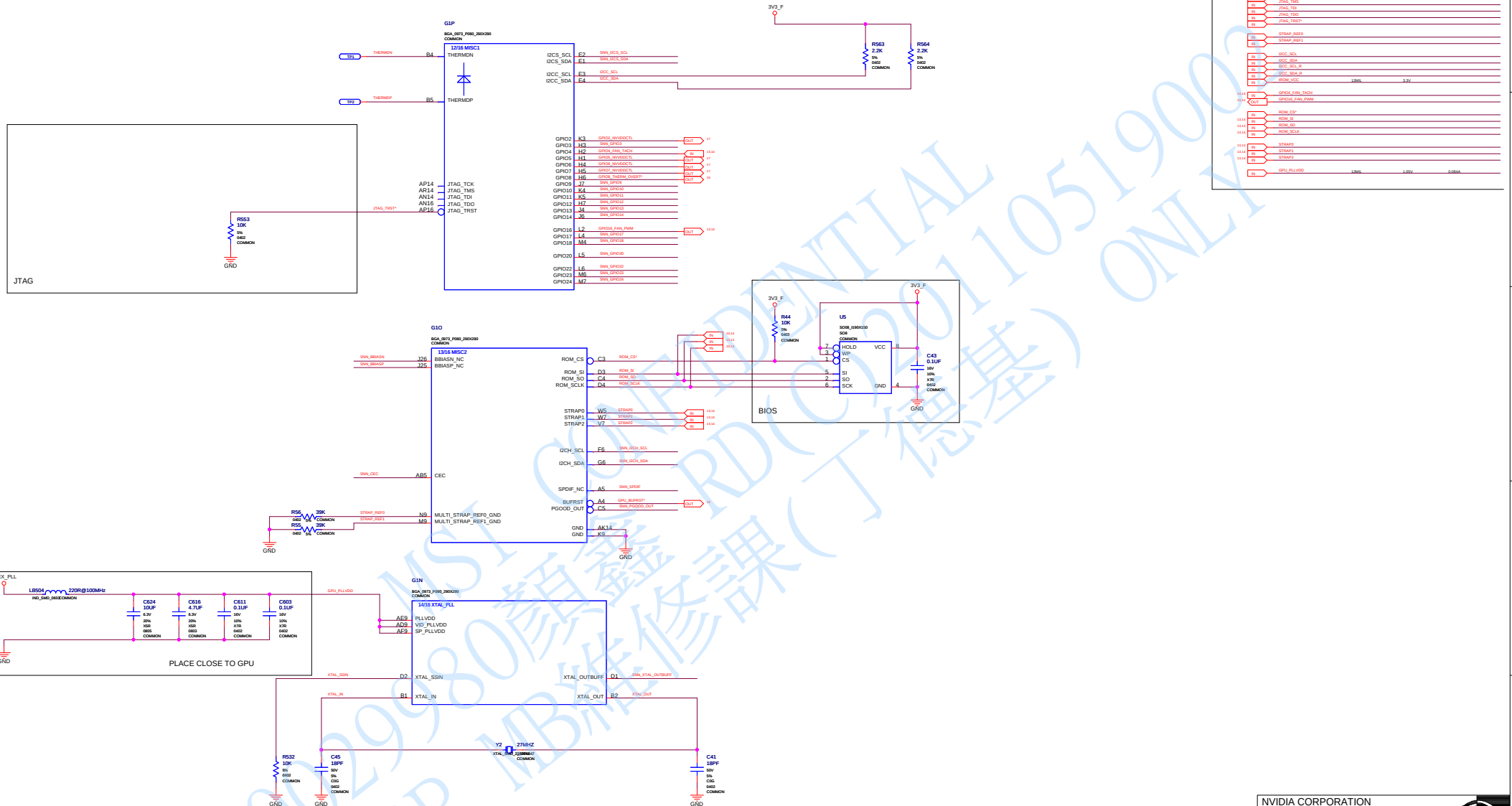

MSI CONFIDENTIAL
RD(C)2011051900
00029980 福鑫 FOR IBM修課(丁德富) ONLY

ASSEMBLY	BASE LEVEL GENERIC SCHEMATIC ONLY, COMMON & NO_STUFF ASSEMBLY NOTES AND BOM NOT FINAL
PAGE DETAIL	XTAL, ROM, JTAG, Misc

ALL NVIDIA DESIGN SPECIFICATIONS, REFERENCE SPECIFICATIONS, REFERENCE BOARDS, FILES, DRAWINGS, DIAGNOSTICS, LISTS AND OTHER DOCUMENTS OR INFORMATION (TOGETHER AND SEPARATELY, "MATERIALS") ARE BEING PROVIDED 'AS IS'. THE MATERIALS MAY CONTAIN KNOWN AND UNKNOWN VIOLATIONS OR DEVIATIONS OF INDUSTRY STANDARDS AND SPECIFICATIONS. NVIDIA MAKES NO WARRANTIES, EXPRESSED, IMPLIED, STATUTORY OR OTHERWISE WITH RESPECT TO THE MATERIALS OR OTHERWISE, AND EXPRESSLY DISCLAIMS ALL IMPLIED WARRANTIES INCLUDING, WITHOUT LIMITATION, THE WARRANTIES OF DESIGN, OF NONINFRINGEMENT, MERCHANTABILITY OR FITNESS FOR A PARTICULAR PURPOSE, OR ARISING FROM A COURSE OF DEALING, TRADE USAGE, TRADE PRACTICE, OR INDUSTRY STANDARDS.

NVIDIA CORPORATION
2701 SAN TOMAS EXPRESSWAY
SANTA CLARA, CA 95050, USA

NV_PN	600-11071-BASE-SCH		
PCB REV	P1071-A01	PAGE	
BOM REV	A	DATE	01-APR-2010

Straps, Thermal, Mechanical

Net Name | MIN_WIDTH | VOLTAGE | MAX_CURRENT

GPIO16_FAN_O
GPIO16_FAN_ADJ
GPIO16_FAN_C
GPIO16_FAN_L

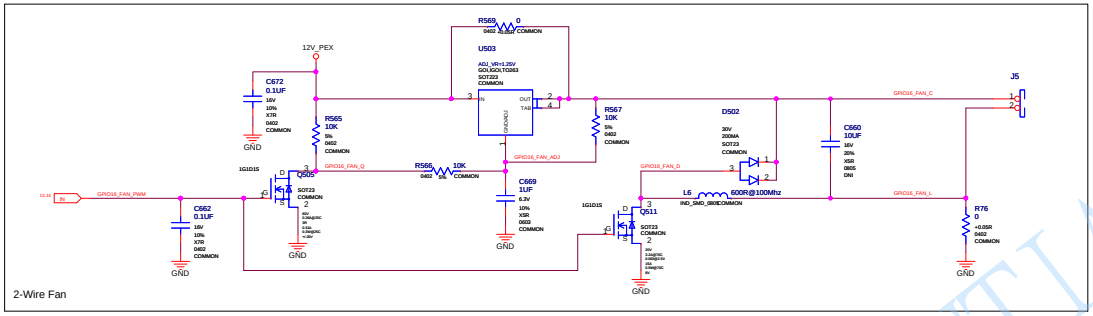

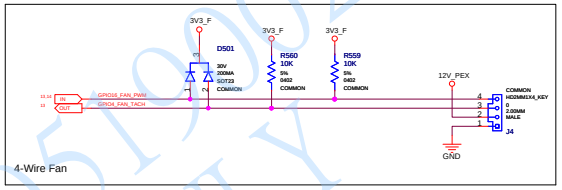

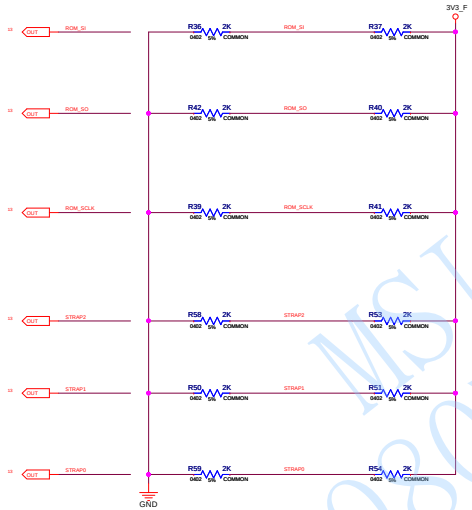

GF108 Straps

Bit	Signal	Values
03:	RAMCFG[3]	0000
		0001 Micron
02:	RAMCFG[2]	0010 Hynix
		0011 Samsung
01:	RAMCFG[1]	0100
		0101
00:	RAMCFG[0]	0110
		0111
02:	XCLK_417	0 Disable
		1 Enable
02:	FB[0]	0 Default
		1
01:	SMB_ALT_ADDR	0 0x9E
		1 0x6C
00:	VGA_DEVICE	0 Disable
		1 Enable
03:	PCI_DEVID_EXT	0 GF108-300-A1
		0 GF108-200-A1
02:	SUB_VENDOR	0 No BIOS
		1 BIOS
01:	SLOT_CLK_CFG	0 Disable
		1 Enable
00:	PEX_PLL_EN_TERM100	0 Disable
		1 Enable
03:	PCI_DEVID[3]	0101 GF108-300-A1
		0010 GF108-200-A1
02:	PCI_DEVID[2]	
01:	PCI_DEVID[1]	
00:	PCI_DEVID[0]	
02:	3GIO_PADCFG_LUT_ADR[2]	0000 DSKTOP_DEFAULT
		0001 MOBILE_DEFAULT
02:	3GIO_PADCFG_LUT_ADR[2]	0010 MOBILE_NTHRS_LLAMP
		0011 MOBILE_NTHRS_LAMP
01:	3GIO_PADCFG_LUT_ADR[1]	0100 MOBILE_NTHRS_HAMP
		0101 MOBILE_NTHRS_HHAMP
00:	3GIO_PADCFG_LUT_ADR[0]	0110 MOBILE_NTHRS_HHHAMP
		0111 MOBILE_NTHRS_HHHHAMP
		1000 DSKTOP_HTHRS
		1001 MOBILE_HTHRS_NAMP
		1010 MOBILE_HTHRS_LLAMP
		1011 MOBILE_HTHRS_LAMP
		1100 MOBILE_HTHRS_HAMP
		1101 MOBILE_HTHRS_HHAMP
		1110 MOBILE_HTHRS_HHHAMP
		1111 MOBILE_HTHRS_HHHHAMP
03:	USER[3]	0000 Default
02:	USER[2]	
01:	USER[1]	
00:	USER[0]	

Multilevel Straps

5K to GND	0000
10K to GND	0001
15K to GND	0010
20K to GND	0011
25K to GND	0100
30K to GND	0101
35K to GND	0110
45K to GND	0111
5K to VCC	1000
10K to VCC	1001
15K to VCC	1010
20K to VCC	1011
25K to VCC	1100
30K to VCC	1101
35K to VCC	1110
45K to VCC	1111

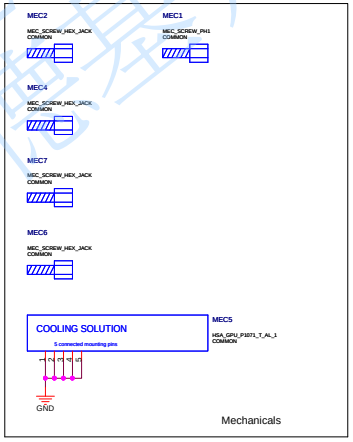

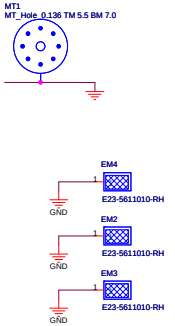

ALL NVIDIA DESIGN SPECIFICATIONS, REFERENCE SPECIFICATIONS, REFERENCE BOARDS, FILES, DRAWINGS, DIAGNOSTICS, LISTS AND OTHER DOCUMENTS OR INFORMATION (TOGETHER AND SEPARATELY, "MATERIALS") ARE BEING PROVIDED "AS IS". THE MATERIALS MAY CONTAIN KNOWN AND UNKNOWN VIOLATIONS OR DEVIATIONS OF INDUSTRY STANDARDS AND SPECIFICATIONS. NVIDIA MAKES NO WARRANTIES, EXPRESSED, IMPLIED, STATUTORY OR OTHERWISE WITH RESPECT TO THE MATERIALS OR OTHERWISE, AND EXPRESSLY DISCLAIMS ALL IMPLIED WARRANTIES INCLUDING, WITHOUT LIMITATION, THE WARRANTIES OF DESIGN, OF NONINFRINGEMENT, MERCHANTABILITY OR FITNESS FOR A PARTICULAR PURPOSE, OR ARISING FROM A COURSE OF DEALING, TRADE USAGE, TRADE PRACTICE, OR INDUSTRY STANDARDS.

ASSEMBLY	BASE LEVEL GENERIC SCHEMATIC ONLY, COMMON & NO_STUFF ASSEMBLY NOTES AND BOM NOT FINAL
PAGE DETAIL	Straps, Thermal, Mechanical

NVIDIA CORPORATION
2701 SAN TOMAS EXPRESSWAY
SANTA CLARA, CA 95050, USA

NV_PN	600-11071-BASE-SCH		
PCB REV	P1071-A01	PAGE	
BOM REV	A	DATE	01-APR-2010

MSI CONFIDENTIAL (C) 2011 ONLY FOR MB 002998 (仅供 MB 002998 使用)

Power Supply I: Misc Power, Thermal Shutdown

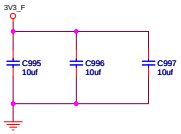

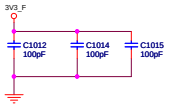

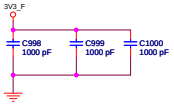

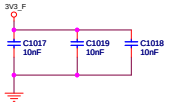

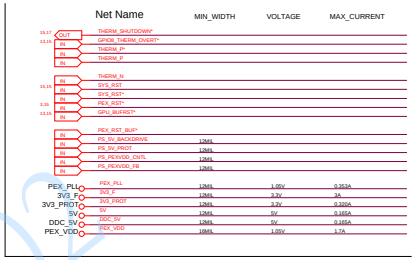

Top
Single Ended_Memory CMD
6.6929 mil
40 ohm +/- 10%

Int3
Single Ended_RGB
4.76377 mil
50 ohm +/- 10%

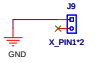

Bottom
Single Ended_Memory Data
3.937 mil
53 ohm +/- 10%

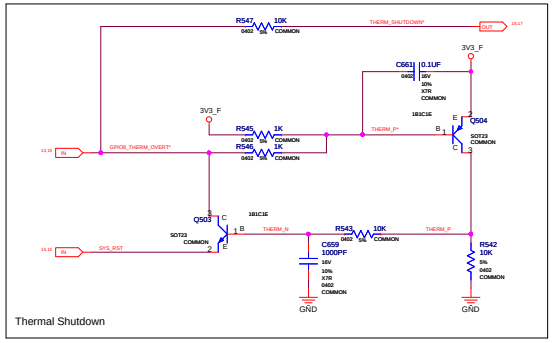

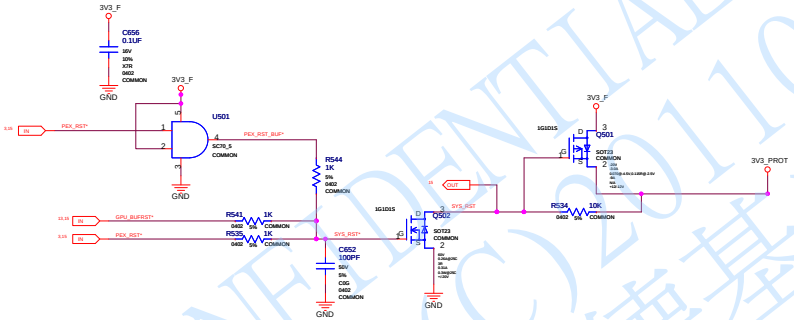

Top
Diffenential_PCIE BUS
3.94 / 4.72 mil
90 ohm +/- 10%

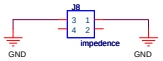

Int3
Diffenential_DVI
3.94 / 5.98 mil
90 ohm +/- 10%

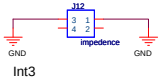

Int3
Diffenential_Memory Clock
4.33 / 4.13 mil
80 ohm +/- 10%

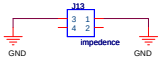

Bottom
Diffenential_PCIE BUS
3.94 / 4.72 mil
90 ohm +/- 10%

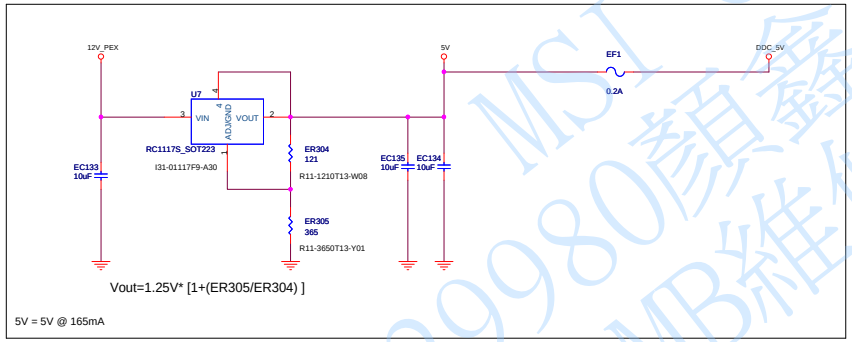

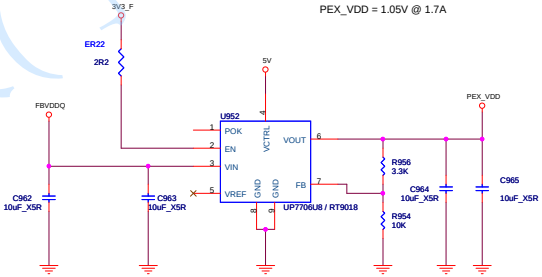

PEX_VDD = 1.05V @ 1.7A

PEX_VDD = 1.05V @ 1.7A

Vout=0.8V * (1+ R956 / R954)

MSI CONFIDENTIAL
002998O鎮鑫 RD(C)20110519002
FOR MB維修課(下載專) ONLY

ASSEMBLY	BASE LEVEL GENERIC SCHEMATIC ONLY, COMMON & NO_STUFF ASSEMBLY NOTES AND BOM NOT FINAL
PAGE DETAIL	Power Supply I: Misc Power, Thermal Shutdown

ALL NVIDIA DESIGN SPECIFICATIONS, REFERENCE SPECIFICATIONS, REFERENCE BOARDS, FILES, DRAWINGS, DIAGNOSTICS, LISTS AND OTHER DOCUMENTS OR INFORMATION (TOGETHER AND SEPARATELY, 'MATERIALS') ARE BEING PROVIDED 'AS IS'. THE MATERIALS MAY CONTAIN KNOWN AND UNKNOWN VIOLATIONS OR DEVIATIONS OF INDUSTRY STANDARDS AND SPECIFICATIONS. NVIDIA MAKES NO WARRANTIES, EXPRESSED, IMPLIED, STATUTORY OR OTHERWISE WITH RESPECT TO THE MATERIALS OR OTHERWISE, AND EXPRESSLY DISCLAIMS ALL IMPLIED WARRANTIES INCLUDING, WITHOUT LIMITATION, THE WARRANTIES OF DESIGN, OF NONINFRINGEMENT, MERCHANTABILITY OR FITNESS FOR A PARTICULAR PURPOSE, OR ARISING FROM A COURSE OF DEALING, TRADE USAGE, TRADE PRACTICE, OR INDUSTRY STANDARDS.

NVIDIA CORPORATION
2701 SAN TOMAS EXPRESSWAY
SANTA CLARA, CA 95050, USA

NV_PN	600-11071-BASE-SCH		
PCB REV	P1071-A01	PAGE	
BOM REV	A	DATE	01-APR-2010

Power Supply II: FBVDDQ

Net Name	MIN_WIDTH	VOLTAGE	MAX_CURRENT
PS_FBVDD_VCC	12MIL		
PS_FBVDD_EN	12MIL		
PS_FBVDD_EN*			
PS_FBVDD_BOOT	12MIL		
PS_FBVDD_BOOT_RC	12MIL		
PS_FBVDD_FB	12MIL		
PS_FBVDD_FB_RC	12MIL		
PS_FBVDD_CP_RC	12MIL		
PS_FBVDD_UG	16MIL		
PS_FBVDD_UG_R	16MIL		
PS_FBVDD_LG	16MIL		
PS_FBVDD_PHASE	16MIL		
PS_FBVDD_SNUB	16MIL		
FBVDDQ	16MIL	1.50V	8.6A

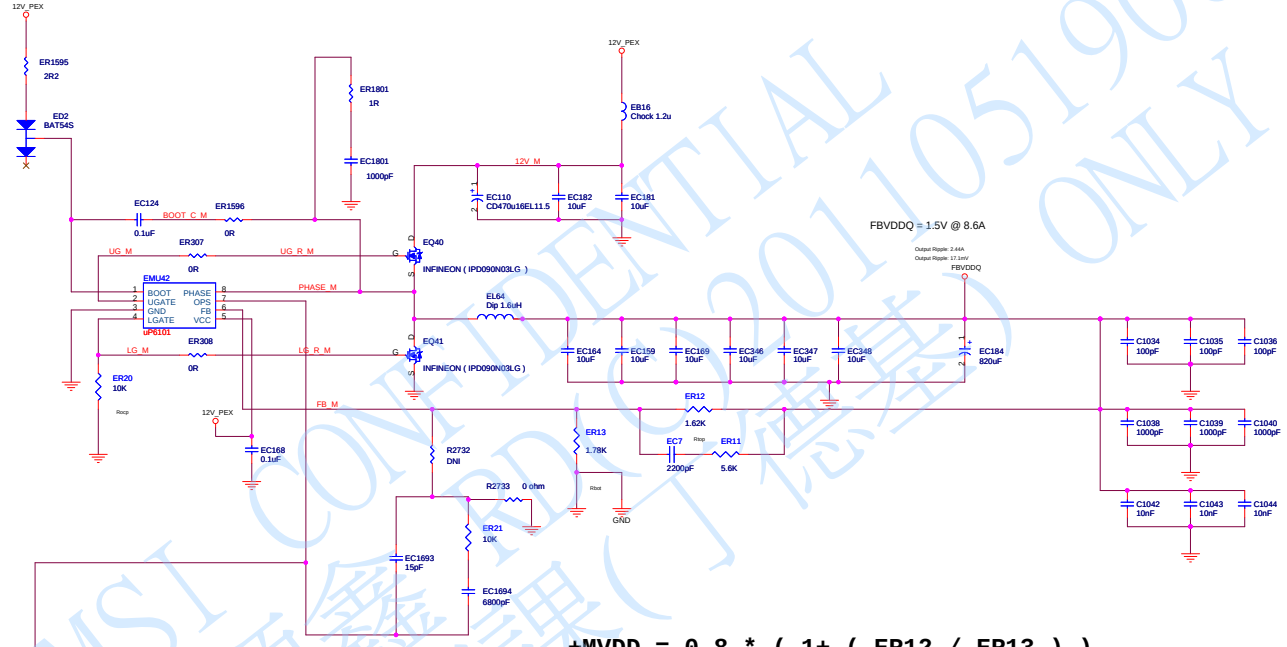

+MVDD = 0.8 * (1+ (ER12 / ER13))

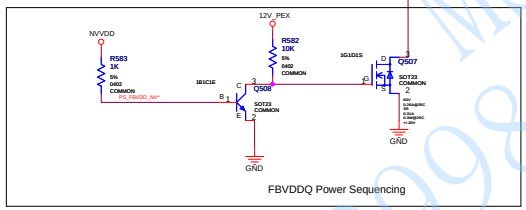

FBVDDQ Power Sequencing

ASSEMBLY	BASE LEVEL GENERIC SCHEMATIC ONLY, COMMON & NO_STUFF ASSEMBLY NOTES AND BOM NOT FINAL
PAGE DETAIL	Power Supply II: FBVDDQ

NVIDIA CORPORATION
2701 SAN TOMAS EXPRESSWAY
SANTA CLARA, CA 95050, USA

NV_PN	600-11071-BASE-SCH		
PCB REV	P1071-A01	PAGE	
BOM REV	A	DATE	01-APR-2010

ALL NVIDIA DESIGN SPECIFICATIONS, REFERENCE SPECIFICATIONS, REFERENCE BOARDS, FILES, DRAWINGS, DIAGNOSTICS, LISTS AND OTHER DOCUMENTS OR INFORMATION (TOGETHER AND SEPARATELY, 'MATERIALS') ARE BEING PROVIDED 'AS IS'. THE MATERIALS MAY CONTAIN KNOWN AND UNKNOWN VIOLATIONS OR DEVIATIONS OF INDUSTRY STANDARDS AND SPECIFICATIONS. NVIDIA MAKES NO WARRANTIES, EXPRESSED, IMPLIED, STATUTORY OR OTHERWISE WITH RESPECT TO THE MATERIALS OR OTHERWISE, AND EXPRESSLY DISCLAIMS ALL IMPLIED WARRANTIES INCLUDING, WITHOUT LIMITATION, THE WARRANTIES OF DESIGN, OF NONINFRINGEMENT, MERCHANTABILITY OR FITNESS FOR A PARTICULAR PURPOSE, OR ARISING FROM A COURSE OF DEALING, TRADE USAGE, TRADE PRACTICE, OR INDUSTRY STANDARDS.

MSI CONFIDENTIAL
00029980顏鑫 PD(C)20110519002
FOR MB維修課(丁德基) ONLY

Power Supply III: NVVDD

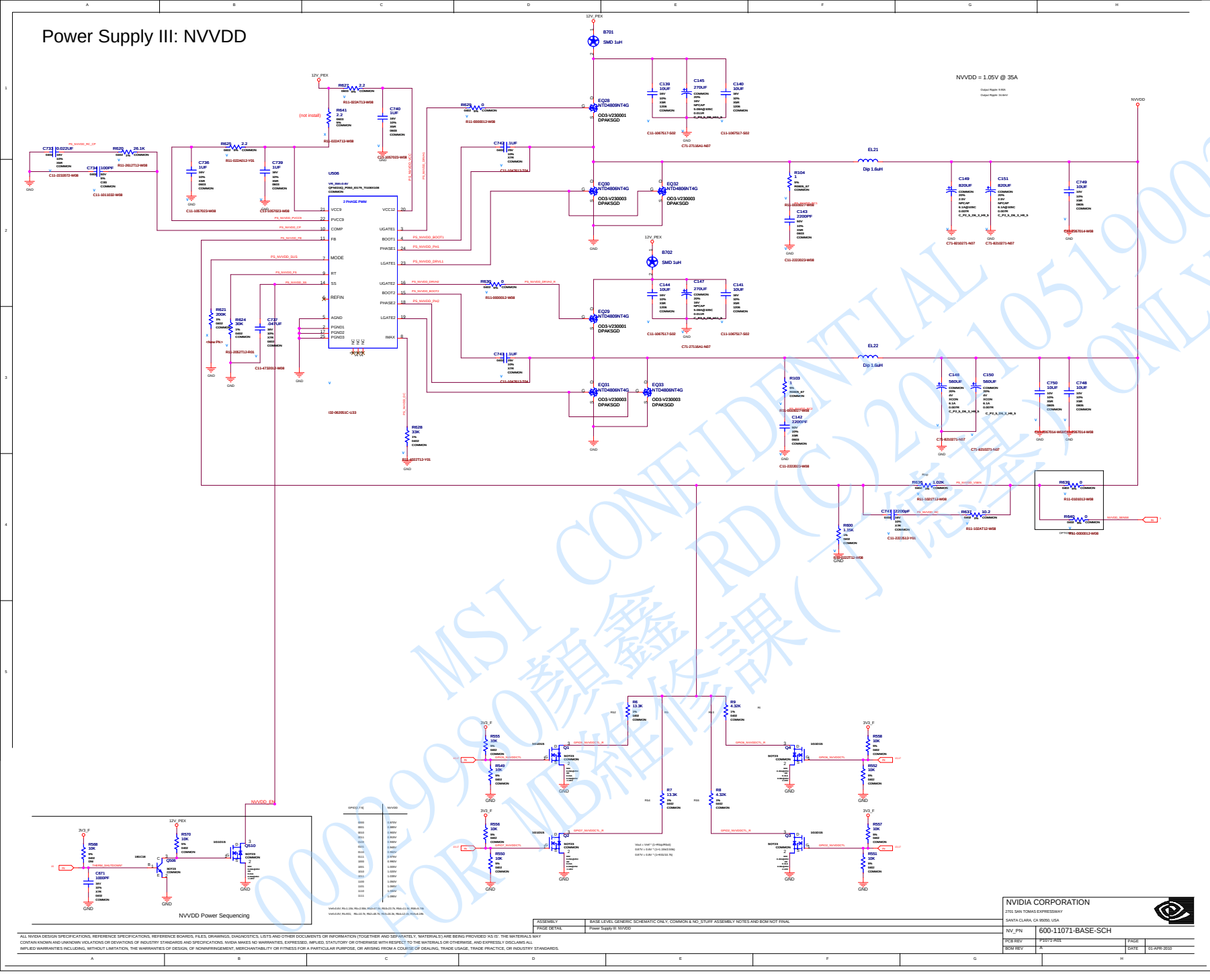

MSI CONFIDENTIAL RD 2011051902
0009990 碧鑫 FOR MB 維修課 (含) 只供 ONLY

ASSEMBLY	BASE LEVEL GENERIC SCHEMATIC ONLY. COMMON & NO_STUFF ASSEMBLY NOTES AND BOM NOT FINAL
PAGE DETAIL	Power Supply III: NVVDD

ALL NVIDIA DESIGN SPECIFICATIONS, REFERENCE SPECIFICATIONS, REFERENCE BOARDS, FILES, DRAWINGS, DIAGNOSTICS, LISTS AND OTHER DOCUMENTS OR INFORMATION (TOGETHER AND SEPARATELY, "MATERIALS") ARE BEING PROVIDED "AS IS". THE MATERIALS MAY CONTAIN KNOWN AND UNKNOWN VIOLATIONS OR DEVIATIONS OF INDUSTRY STANDARDS AND SPECIFICATIONS. NVIDIA MAKES NO WARRANTIES, EXPRESSED, IMPLIED, STATUTORY OR OTHERWISE WITH RESPECT TO THE MATERIALS OR OTHERWISE, AND EXPRESSLY DISCLAIMS ALL IMPLIED WARRANTIES INCLUDING, WITHOUT LIMITATION, THE WARRANTIES OF DESIGN, OF NONINFRINGEMENT, MERCHANTABILITY OR FITNESS FOR A PARTICULAR PURPOSE, OR ARISING FROM A COURSE OF DEALING, TRADE USAGE, TRADE PRACTICE, OR INDUSTRY STANDARDS.

NVIDIA CORPORATION
2701 SAN TOMAS EXPRESSWAY
SANTA CLARA, CA 95050, USA

NV_PN	600-11071-BASE-SCH		
PCB REV	P1071-A01	PAGE	
SCM REV	A	DATE	01-APR-2010

Title: Basenet Report
Design: p1071_a01
Date: Mar 31 14:19:50 2010

Base nets and synonyms for
p1071_a01_lib:P1071_A01(@p1071_a01_lib.p
1071_a01(sch_1))
Base Signal Location([Zone][dir])

3V3_F 15.1G
3V3_PEX 17.2H
3V3_PROT 15.1G
5V 15.1G
12V_PEX 17.2H
DACA_BLUE 8.1G< 8.4C
DACA_BLUE_C 8.1G< 8.5F> 10.3F<
DACA_GREEN 8.1G< 8.3C
DACA_GREEN_C 8.1G> 8.4F> 10.3F<
DACA_HSYNC 8.1G< 8.3C
DACA_HSYNC_C 8.1G> 8.2F> 10.3F<
DACA_HS_BUF 8.1G< 8.2D
DACA_RED 8.1G< 8.3C
DACA_RED_C 8.1G> 8.3F> 10.3F<
DACA_RSET 8.1G< 8.3B
DACA_VREF 8.1G< 8.3B
DACA_VSYNC 8.1G< 8.3C
DACA_VSYNC_C 8.1G> 8.3F> 10.3F<
DACA_VS_BUF 8.1G< 8.3D
DACB_BLUE 9.1G< 9.4C
DACB_BLUE_C 9.1G< 9.5E
DACB_GREEN 9.1G< 9.3C
DACB_GREEN_C 9.1G< 9.4E
DACB_HSYNC 9.1G< 9.3C
DACB_HSYNC_C 9.1G< 9.2E
DACB_HS_BUF 9.1G< 9.2D
DACB_RED 9.1G< 9.3C
DACB_RED_C 9.1G< 9.3E
DACB_RSET 9.1G< 9.3B
DACB_VREF 9.1G< 9.3B
DACB_VSYNC 9.1G< 9.3C
DACB_VSYNC_C 9.1G< 9.3E
DACB_VS_BUF 9.1G< 9.3D
DAC_VDD 8.1G> 8.3B> 9.3A<
DDC_5V 15.1G
DP_MODE 11.2F
DP_MODE* 11.2G
DP_MODE_C 11.4H
FBA_CLK0 4.1G> 4.4C> 5.2A<
5.2C< 5.4B<
FBA_CLK0* 4.1G> 4.4C> 5.2A<
5.2C< 5.4B<
FBA_CLK0_T 5.1G< 5.4B
FBA_CLK1 4.1G> 4.4C> 5.2E<
5.2F< 5.5B<
FBA_CLK1* 4.1G> 4.4C> 5.2E<
5.2F< 5.5B<
FBA_CLK1_T 5.1G< 5.5B
FBA_CMD<0> 4.3C 5.1A 5.1C
FBA_CMD<30..0> 4.1G> 4.3D> 5.1A<
FBA_CMD<2> 4.3C 4.3C 5.3A 5.3C
FBA_CMD<3> 4.3C 4.3D 5.2A 5.2C
FBA_CMD<5> 4.3C 4.4D 5.3A 5.3C
5.3E 5.3F
FBA_CMD<6> 4.3C 5.2A 5.2C 5.2E
5.2F
FBA_CMD<7> 4.3C 5.2A 5.2C 5.2E
5.2F
FBA_CMD<8> 4.3C 5.2A 5.2C 5.2E
5.2F
FBA_CMD<9> 4.3C 5.2A 5.2C 5.2E
5.2F
FBA_CMD<10> 4.3C 5.2A 5.2C 5.2E
5.2F
FBA_CMD<11> 4.3C 5.2A 5.2C 5.2E
5.2F
FBA_CMD<12> 4.3C 5.2A 5.2C 5.2E
5.2F
FBA_CMD<13> 4.3C 5.1A 5.1C 5.1E
5.1F
FBA_CMD<14> 4.3C 5.1A 5.1C 5.1E
5.1F
FBA_CMD<15> 4.3C 5.1E 5.1F
FBA_CMD<16> 4.3C 4.3C 5.3E 5.3F
FBA_CMD<17> 4.3C 4.3D 5.2E 5.2F
FBA_CMD<18> 4.3C 5.2A 5.2C 5.2E
5.2F
FBA_CMD<19> 4.3C 5.2A 5.2C 5.2E
5.2F
FBA_CMD<20> 4.3C 5.2A 5.2C 5.2E
5.2F
FBA_CMD<21> 4.3C 5.2A 5.2C 5.2E
5.2F
FBA_CMD<22> 4.4C 5.2A 5.2C 5.2E
5.2F
FBA_CMD<23> 4.4C 5.2A 5.2C 5.2E
5.2F
FBA_CMD<24> 4.4C 5.2A 5.2C 5.2E
5.2F
FBA_CMD<25> 4.4C 5.2A 5.2C 5.2E
5.2F
FBA_CMD<26> 4.4C 5.2A 5.2C 5.2E
5.2F
FBA_CMD<27> 4.4C 5.2A 5.2C 5.2E
5.2F
FBA_CMD<28> 4.4C 5.2A 5.2C 5.2E
5.2F
FBA_CMD<29> 4.4C 5.2A 5.2C 5.2E
5.2F
FBA_CMD<30> 4.4C 5.1A 5.1C 5.1E
5.1F
FBA_D<0> 4.1A 5.4D
FBA_D<63..0> 4.1A<> 4.1G<> 5.4C<>
FBA_D<1> 4.1A 5.4D
FBA_D<2> 4.1A 5.4D
FBA_D<3> 4.1A 5.4D
FBA_D<4> 4.1A 5.4D
FBA_D<5> 4.1A 5.4D
FBA_D<6> 4.1A 5.4D
FBA_D<7> 4.1A 5.4D
FBA_D<8> 4.1A 5.5D
FBA_D<9> 4.1A 5.5D
FBA_D<10> 4.1A 5.5D
FBA_D<11> 4.1A 5.5D
FBA_D<12> 4.1A 5.5D
FBA_D<13> 4.1A 5.5D
FBA_D<14> 4.2A 5.5D
FBA_D<15> 4.2A 5.5D
FBA_D<16> 4.2A 5.4E
FBA_D<17> 4.2A 5.4E
FBA_D<18> 4.2A 5.4E
FBA_D<19> 4.2A 5.4E
FBA_D<20> 4.2A 5.4E
FBA_D<21> 4.2A 5.4E
FBA_D<22> 4.2A 5.4E
FBA_D<23> 4.2A 5.4E
FBA_D<24> 4.2A 5.5E
FBA_D<25> 4.2A 5.5E
FBA_D<26> 4.2A 5.5E
FBA_D<27> 4.2A 5.5E
FBA_D<28> 4.2A 5.5E
FBA_D<29> 4.2A 5.5E
FBA_D<30> 4.2A 5.5E
FBA_D<31> 4.2A 5.5E
FBA_D<32> 4.2A 5.4F
FBA_D<33> 4.2A 5.4F
FBA_D<34> 4.2A 5.4F
FBA_D<35> 4.2A 5.4F
FBA_D<36> 4.2A 5.4F
FBA_D<37> 4.2A 5.4F
FBA_D<38> 4.2A 5.4F
FBA_D<39> 4.2A 5.4F
FBA_D<40> 4.2A 5.5F
FBA_D<41> 4.2A 5.5F
FBA_D<42> 4.2A 5.5F
FBA_D<43> 4.2A 5.5F
FBA_D<44> 4.2A 5.5F
FBA_D<45> 4.3A 5.5F
FBA_D<46> 4.3A 5.5F
FBA_D<47> 4.3A 5.5F
FBA_D<48> 4.3A 5.4G
FBA_D<49> 4.3A 5.4G
FBA_D<50> 4.3A 5.4G
FBA_D<51> 4.3A 5.4G
FBA_D<52> 4.3A 5.4G
FBA_D<53> 4.3A 5.4G
FBA_D<54> 4.3A 5.4G
FBA_D<55> 4.3A 5.4G
FBA_D<56> 4.3A 5.5G
FBA_D<57> 4.3A 5.5G
FBA_D<58> 4.3A 5.5G
FBA_D<59> 4.3A 5.5G
FBA_D<60> 4.3A 5.5G
FBA_D<61> 4.3A 5.5G
FBA_D<62> 4.3A 5.5G
FBA_D<63> 4.3A 5.5G
FBA_DEBUG0 4.1C< 4.4C
FBA_DEBUG1 4.2G< 4.4C
FBA_DQM<0> 4.3A 5.4D
FBA_DQM<7..0> 4.1G> 4.3A> 5.4C<
FBA_DQM<1> 4.3A 5.5D
FBA_DQM<2> 4.3A 5.4E
FBA_DQM<3> 4.3A 5.5E
FBA_DQM<4> 4.3A 5.4F
FBA_DQM<5> 4.3A 5.5F
FBA_DQM<6> 4.3A 5.4G
FBA_DQM<7> 4.3A 5.5G
FBA_DQS_RN<0> 4.4A 5.4D 7.1G
FBA_DQS_RN<7..0> 4.4A<> 5.4C<> 7.1G<>
FBA_DQS_RN<1> 4.4A 5.5D 7.1G
FBA_DQS_RN<2> 4.4A 5.4E 7.1G
FBA_DQS_RN<3> 4.4A 5.5E 7.1G
FBA_DQS_RN<4> 4.4A 5.4F 7.1G
FBA_DQS_RN<5> 4.4A 5.5F 7.1G
FBA_DQS_RN<6> 4.4A 5.4G 7.1G
FBA_DQS_RN<7> 4.4A 5.5G 7.1G
FBA_DQS_WP<0> 4.4A 5.4D 7.1G
FBA_DQS_WP<7..0> 4.4A<> 5.4C<> 7.1G<>
FBA_DQS_WP<1> 4.4A 5.5D 7.1G
FBA_DQS_WP<2> 4.4A 5.4E 7.1G
FBA_DQS_WP<3> 4.4A 5.5E 7.1G
FBA_DQS_WP<4> 4.4A 5.4F 7.1G
FBA_DQS_WP<5> 4.4A 5.5F 7.1G
FBA_DQS_WP<6> 4.4A 5.4G 7.1G
FBA_DQS_WP<7> 4.4A 5.5G 7.1G
FBA_VREF 5.1G< 5.3H
FBA_ZQ0 5.1G< 5.3A
FBA_ZQ1 5.1G< 5.3C
FBA_ZQ2 5.1G< 5.3E
FBA_ZQ3 5.1G< 5.3F
FBB_CLK0 4.1G> 4.4G> 6.2A<
6.2C< 6.4B<
FBB_CLK0* 4.1G> 4.4G> 6.2A<
6.2C< 6.4B<
FBB_CLK0_T 6.1G< 6.4B
FBB_CLK1 4.1G> 4.4G> 6.2E<
6.2F< 6.5B<
FBB_CLK1* 4.1G> 4.4G> 6.2E<
6.2F< 6.5B<
FBB_CLK1_T 6.1G< 6.5B
FBB_CMD<0> 4.3G 6.1A 6.1C
FBB_CMD<30..0> 4.1G> 4.3H> 6.1A<
FBB_CMD<2> 4.3G 4.3G 6.3A 6.3C
FBB_CMD<3> 4.3G 4.3H 6.2A 6.2C
FBB_CMD<5> 4.3G 4.4H 6.3A 6.3C
6.3E 6.3F
FBB_CMD<6> 4.3G 6.2A 6.2C 6.2E
6.2F
FBB_CMD<7> 4.3G 6.2A 6.2C 6.2E
6.2F
FBB_CMD<8> 4.3G 6.2A 6.2C 6.2E
6.2F
FBB_CMD<9> 4.3G 6.2A 6.2C 6.2E
6.2F
FBB_CMD<10> 4.3G 6.2A 6.2C 6.2E
6.2F
FBB_CMD<11> 4.3G 6.2A 6.2C 6.2E
6.2F
FBB_CMD<12> 4.3G 6.2A 6.2C 6.2E
6.2F
FBB_CMD<13> 4.3G 6.1A 6.1C 6.1E
6.1F
FBB_CMD<14> 4.3G 6.1A 6.1C 6.1E
6.1F
FBB_CMD<15> 4.3G 6.1E 6.1F
FBB_CMD<16> 4.3G 6.1E 6.1F
FBB_CMD<18> 4.3G 4.3G 6.3E 6.3F
FBB_CMD<19> 4.3G 4.3H 6.2E 6.2F
FBB_CMD<20> 4.3G 6.2A 6.2C 6.2E
6.2F
FBB_CMD<21> 4.3G 6.2A 6.2C 6.2E
6.2F
FBB_CMD<22> 4.3G 6.2A 6.2C 6.2E
6.2F
FBB_CMD<23> 4.4G 6.2A 6.2C 6.2E
6.2F
FBB_CMD<24> 4.4G 6.2A 6.2C 6.2E
6.2F
FBB_CMD<25> 4.4G 6.2A 6.2C 6.2E
6.2F
FBB_CMD<26> 4.4G 6.2A 6.2C 6.2E
6.2F
FBB_CMD<27> 4.4G 6.2A 6.2C 6.2E
6.2F
FBB_CMD<28> 4.4G 6.2A 6.2C 6.2E
6.2F
FBB_CMD<29> 4.4G 6.2A 6.2C 6.2E
6.2F
FBB_CMD<30> 4.4G 6.1A 6.1C 6.1E
6.1F
FBB_D<0> 4.1E 6.4D
FBB_D<63..0> 4.1E<> 4.1G<> 6.4C<>
FBB_D<1> 4.1E 6.4D
FBB_D<2> 4.1E 6.4D
FBB_D<3> 4.1E 6.4D
FBB_D<4> 4.1E 6.4D
FBB_D<5> 4.1E 6.4D
FBB_D<6> 4.1E 6.4D
FBB_D<7> 4.1E 6.4D
FBB_D<8> 4.1E 6.5D
FBB_D<9> 4.1E 6.5D
FBB_D<10> 4.1E 6.5D
FBB_D<11> 4.1E 6.5D
FBB_D<12> 4.1E 6.5D
FBB_D<13> 4.1E 6.5D
FBB_D<14> 4.1E 6.5D
FBB_D<15> 4.2E 6.5D
FBB_D<16> 4.2E 6.4E
FBB_D<17> 4.2E 6.4E
FBB_D<18> 4.2E 6.4E
FBB_D<19> 4.2E 6.4E
FBB_D<20> 4.2E 6.4E
FBB_D<21> 4.2E 6.4E
FBB_D<22> 4.2E 6.4E
FBB_D<23> 4.2E 6.4E
FBB_D<24> 4.2E 6.5E
FBB_D<25> 4.2E 6.5E
FBB_D<26> 4.2E 6.5E
FBB_D<27> 4.2E 6.5E
FBB_D<28> 4.2E 6.5E
FBB_D<29> 4.2E 6.5E
FBB_D<30> 4.2E 6.5E
FBB_D<31> 4.2E 6.5E
FBB_D<32> 4.2E 6.4F
FBB_D<33> 4.2E 6.4F
FBB_D<34> 4.2E 6.4F
FBB_D<35> 4.2E 6.4F
FBB_D<36> 4.2E 6.4F
FBB_D<37> 4.2E 6.4F
FBB_D<38> 4.2E 6.4F
FBB_D<39> 4.2E 6.4F
FBB_D<40> 4.2E 6.5F
FBB_D<41> 4.2E 6.5F
FBB_D<42> 4.2E 6.5F
FBB_D<43> 4.2E 6.5F
FBB_D<44> 4.2E 6.5F
FBB_D<45> 4.3E 6.5F
FBB_D<46> 4.3E 6.5F
FBB_D<47> 4.3E 6.5F
FBB_D<48> 4.3E 6.4G
FBB_D<49> 4.3E 6.4G
FBB_D<50> 4.3E 6.4G
FBB_D<51> 4.3E 6.4G
FBB_D<52> 4.3E 6.4G
FBB_D<53> 4.3E 6.4G
FBB_D<54> 4.3E 6.4G
FBB_D<55> 4.3E 6.4G
FBB_D<56> 4.3E 6.5G
FBB_D<57> 4.3E 6.5G
FBB_D<58> 4.3E 6.5G
FBB_D<59> 4.3E 6.5G
FBB_D<60> 4.3E 6.5G
FBB_D<61> 4.3E 6.5G
FBB_D<62> 4.3E 6.5G
FBB_D<63> 4.3E 6.5G
FBB_DEBUG0 4.2G< 4.4G
FBB_DEBUG1 4.2G< 4.4G
FBB_DQM<0> 4.3E 6.4D
FBB_DQM<7..0> 4.1G> 4.3E> 6.4C<
FBB_DQM<1> 4.3E 6.5D
FBB_DQM<2> 4.3E 6.4E
FBB_DQM<3> 4.3E 6.5E
FBB_DQM<4> 4.3E 6.4F
FBB_DQM<5> 4.3E 6.5F
FBB_DQM<6> 4.3E 6.4G
FBB_DQM<7> 4.3E 6.5G
FBB_DQS_RN<0> 4.4E 6.4D 7.1G
FBB_DQS_RN<7..0> 4.4E<> 6.4C<> 7.1G<>
FBB_DQS_RN<1> 4.4E 6.5D 7.1G
FBB_DQS_RN<2> 4.4E 6.4E 7.1G
FBB_DQS_RN<3> 4.4E 6.5E 7.1G
FBB_DQS_RN<4> 4.4E 6.4F 7.2G
FBB_DQS_RN<5> 4.4E 6.5F 7.2G
FBB_DQS_RN<6> 4.4E 6.4G 7.2G
FBB_DQS_RN<7> 4.4E 6.5G 7.2G
FBB_DQS_WP<0> 4.4E 6.4D 7.1G
FBB_DQS_WP<7..0> 4.4E<> 6.4C<> 7.1G<>
FBB_DQS_WP<1> 4.4E 6.5D 7.1G
FBB_DQS_WP<2> 4.4E 6.4E 7.1G
FBB_DQS_WP<3> 4.4E 6.5E 7.1G
FBB_DQS_WP<4> 4.4E 6.4F 7.2G
FBB_DQS_WP<5> 4.4E 6.5F 7.2G
FBB_DQS_WP<6> 4.4E 6.4G 7.2G
FBB_DQS_WP<7> 4.4E 6.5G 7.2G
FBB_VREF0 6.1G< 6.3D
FBB_VREF1 6.1G< 6.3H
FBB_ZQ0 6.1G< 6.3A
FBB_ZQ1 6.1G< 6.3C
FBB_ZQ2 6.1G< 6.3E
FBB_ZQ3 6.1G< 6.3F
FBVDDQ 16.1G
FB_CAL_PD_VDDQ 4.1G< 4.5G
FB_CAL_PU_GND 4.1G< 4.5G
FB_CAL_TERM_GND 4.1G< 4.5G
FB_PLLAVDD 4.2G< 4.5C
GPIO0_DVI_HPD 10.1G< 10.4D
GPIO0_DVI_HPD_C 10.1G< 10.3F
GPIO0_DVI_HPD_R 10.1G< 10.4E
GPIO2_NVVDDCTL 13.2D< 17.1G< 17.5G<
GPIO2_NVVDDCTL_R 17.2G< 17.5F
GPIO4_FAN_TACH 13.2D< 13.2G< 14.2F>
GPIO5_NVVDDCTL 13.2D> 17.1G< 17.4D<
GPIO5_NVVDDCTL_R 17.1G< 17.4E
GPIO6_NVVDDCTL 13.2D> 17.1G< 17.4G<
GPIO6_NVVDDCTL_R 17.1G< 17.4F
GPIO7_NVVDDCTL 13.2D> 17.1G< 17.5D<
GPIO7_NVVDDCTL_R 17.1G< 17.5E
GPIO8_THERM_OVERT* 13.2D> 15.1G< 15.2B<
GPIO16_FAN_ADJ 14.1G< 14.2C
GPIO16_FAN_C 14.1G< 14.2E
GPIO16_FAN_D 14.2D
GPIO16_FAN_L 14.1G< 14.2E
GPIO16_FAN_PWM 13.2D> 13.2G> 14.2B<
14.2F<
GPIO16_FAN_Q 14.1G< 14.2C
GPIO21_HDMI_HPD 11.2G< 11.4D
GPIO21_HDMI_HPD_C 11.2G< 11.3G
GPIO21_HDMI_HPD_R 11.2G< 11.4E
GPU_BUFRST* 13.4D> 15.1G< 15.3E<
GPU_PLLVDD 13.2G< 13.4B
GPU_TESTMODE 3.1G< 3.5F
I2CA_SCL 8.1F> 8.1G> 10.3F<
I2CA_SDA 8.1G<> 8.2F<> 10.3F<>
I2CB_SCL 9.1G< 9.3C
I2CB_SDA 9.1G< 9.3C
I2CC_SCL 13.1D 13.1G<
I2CC_SCL_R 13.1F 13.1G<
I2CC_SDA 13.1D 13.1G<
I2CC_SDA_R 13.1F 13.1G<
I2CZ_SCL 11.1G< 11.3D
I2CZ_SCL_C 11.1G< 11.3G
I2CZ_SCL_Q 11.3F
I2CZ_SDA 11.1G< 11.3D
I2CZ_SDA_C 11.1G< 11.3G
I2CZ_SDA_Q 11.2F
IFPAB_IOVDD 10.2G< 10.3C
IFPAB_PLLVDD 10.1G< 10.2C
IFPAB_RSET 10.1G< 10.2C
IFPAB_TXC 10.1G< 10.3D
IFPAB_TXC* 10.1G< 10.3D
IFPAB_TXD0 10.1G< 10.2D
IFPAB_TXD0* 10.1G< 10.2D
IFPAB_TXD1 10.1G< 10.2D
IFPAB_TXD1* 10.1G< 10.2D
IFPAB_TXD2 10.1G< 10.2D
IFPAB_TXD2* 10.1G< 10.2D
IFPAB_TXD4 10.1G< 10.3D
IFPAB_TXD4* 10.1G< 10.3D
IFPAB_TXD5 10.1G< 10.3D
IFPAB_TXD5* 10.1G< 10.3D
IFPAB_TXD6 10.1G< 10.3D
IFPAB_TXD6* 10.1G< 10.3D
IFPF_IOVDD 11.2G< 11.3C
IFPF_PLLVDD 11.2C 11.2G<
IFPF_RSET 11.2G< 11.3C
IFPF_TERM 11.2G< 11.5C
IFPF_TXC 11.1G< 11.3D
IFPF_TXC* 11.1G< 11.3D
IFPF_TXC_C 11.1G< 11.3G 11.5D
IFPF_TXC_C* 11.1G< 11.3G 11.5D
IFPF_TXD0 11.1G< 11.3D
IFPF_TXD0* 11.1G< 11.3D
IFPF_TXD0_C 11.1G< 11.3G 11.4D
IFPF_TXD0_C* 11.1G< 11.3G 11.4D
IFPF_TXD1 11.1G< 11.3D
IFPF_TXD1* 11.1G< 11.3D
IFPF_TXD1_C 11.1G< 11.3G 11.4D
IFPF_TXD1_C* 11.1G< 11.3G 11.4D
IFPF_TXD2 11.1G< 11.3D
IFPF_TXD2* 11.1G< 11.3D
IFPF_TXD2_C 11.1G< 11.4D 11.4G
IFPF_TXD2_C* 11.1G< 11.3G 11.4D
IROM_VCC 13.1F 13.1G<
JTAG_TCK 13.1G< 13.2C
JTAG_TDI 13.1G< 13.2C
JTAG_TDO 13.1G< 13.2C
JTAG_TMS 13.1G< 13.2C
JTAG_TRST* 13.1G< 13.2C
NVDD 17.2H
NVDD_SENSE 3.4F> 17.1G< 17.4H<
PEX_PLL 15.1G
PEX_PLLVDD 3.1G< 3.4F
PEX_PRSNT* 3.1B 3.1G<
PEX_REFCLK 3.2C 3.5A<
PEX_REFCLK* 3.2C 3.5A<
PEX_RST* 3.1D> 15.1G< 15.2E<
15.3E<
PEX_RST_BUF* 15.1G< 15.2F
PEX_RX0 3.2C 3.4A<
PEX_RX0* 3.2C 3.4A<
PEX_RX1 3.2C 3.4A<
PEX_RX1* 3.2C 3.4A<
PEX_RX2 3.2C 3.4A<
PEX_RX2* 3.3C 3.4A<
PEX_RX3 3.3C 3.4A<
PEX_RX3* 3.3C 3.4A<
PEX_RX4 3.3C 3.4A<
PEX_RX4* 3.3C 3.4A<
PEX_RX5 3.3C 3.5A<
PEX_RX5* 3.3C 3.5A<
PEX_RX6 3.3C 3.5A<
PEX_RX6* 3.3C 3.5A<
PEX_RX7 3.3C 3.5A<
PEX_RX7* 3.4C 3.5A<
PEX_RX8 3.4C 3.5A<
PEX_RX8* 3.4C 3.5A<
PEX_RX9 3.4C 3.5A<
PEX_RX9* 3.4C 3.5A<
PEX_RX10 3.4C 3.5A<
PEX_RX10* 3.4C 3.5A<
PEX_RX11 3.4C 3.5A<
PEX_RX11* 3.4C 3.5A<
PEX_RX12 3.4C 3.5A<
PEX_RX12* 3.5A< 3.5C
PEX_RX13 3.5A< 3.5C
PEX_RX13* 3.5A< 3.5C
PEX_RX14 3.5A< 3.5C
PEX_RX14* 3.5A< 3.5C
PEX_RX15 3.5A< 3.5C
PEX_RX15* 3.5A< 3.5C
PEX_TERMP 3.1G< 3.5F
PEX_TX0 3.2A< 3.2D
PEX_TX0* 3.2A< 3.2D
PEX_TX1 3.2A< 3.2D
PEX_TX1* 3.2A< 3.2D
PEX_TX2 3.2A< 3.2D
PEX_TX2* 3.2A< 3.2D
PEX_TX3 3.2A< 3.3D
PEX_TX3* 3.2A< 3.3D
PEX_TX4 3.2A< 3.3D
PEX_TX4* 3.2A< 3.3D
PEX_TX5 3.2A< 3.3D
PEX_TX5* 3.2A< 3.3D
PEX_TX6 3.2A< 3.3D
PEX_TX6* 3.2A< 3.3D
PEX_TX7 3.2A< 3.3D
PEX_TX7* 3.2A< 3.3D
PEX_TX8 3.3A< 3.4D
PEX_TX8* 3.3A< 3.4D
PEX_TX9 3.3A< 3.4D
PEX_TX9* 3.3A< 3.4D
PEX_TX10 3.3A< 3.4D
PEX_TX10* 3.3A< 3.4D
PEX_TX11 3.3A< 3.4D
PEX_TX11* 3.3A< 3.4D
PEX_TX12 3.3A< 3.4D
PEX_TX12* 3.3A< 3.4D
PEX_TX13 3.3A< 3.5D
PEX_TX13* 3.3A< 3.5D
PEX_TX14 3.3A< 3.5D
PEX_TX14* 3.3A< 3.5D
PEX_TX15 3.3A< 3.5D
PEX_TX15* 3.3A< 3.5D
PEX_TX0 3.2C 3.3A<
PEX_TX0* 3.2C 3.3A<
PEX_TX1 3.2C 3.3A<
PEX_TX1* 3.2C 3.3A<
PEX_TX2 3.2C 3.3A<
PEX_TX2* 3.2C 3.3A<
PEX_TX3 3.3A< 3.3C
PEX_TX3* 3.3A< 3.3C
PEX_TX4 3.3A< 3.3C
PEX_TX4* 3.3A< 3.3C
PEX_TX5 3.3A< 3.3C
PEX_TX5* 3.3A< 3.3C
PEX_TX6 3.3C 3.4A<
PEX_TX6* 3.3C 3.4A<
PEX_TX7 3.3C 3.4A<
PEX_TX7* 3.3C 3.4A<
PEX_TX8 3.4A< 3.4C
PEX_TX8* 3.4A< 3.4C
PEX_TX9 3.4A< 3.4C
PEX_TX9* 3.4A< 3.4C
PEX_TX10 3.4A< 3.4C
PEX_TX10* 3.4A< 3.4C
PEX_TX11 3.4A< 3.4C
PEX_TX11* 3.4A< 3.4C
PEX_TX12 3.4A< 3.4C
PEX_TX12* 3.4A< 3.4C
PEX_TX13 3.4A< 3.5C
PEX_TX13* 3.4A< 3.5C
PEX_TX14 3.4A< 3.5C
PEX_TX14* 3.4A< 3.5C
PEX_TX15 3.4A< 3.5C
PEX_TX15* 3.4A< 3.5C
PEX_VDD 15.1G
PS_5V_BACKDRIVE 15.1G< 15.4B
PS_5V_PROT 15.1G< 15.4B
PS_FBVDD_BOOT 16.1G< 16.2C
PS_FBVDD_BOOT_RC 16.1G< 16.2D
PS_FBVDD_CP_RC 16.1G< 16.4C
PS_FBVDD_EN 16.1G< 16.3B
PS_FBVDD_EN* 16.1G< 16.4B
PS_FBVDD_FB 16.1G< 16.3C
PS_FBVDD_FB_R 16.4F
PS_FBVDD_FB_RC 16.1G< 16.3F
PS_FBVDD_LG 16.1G< 16.3C
PS_FBVDD_NV* 16.4A
PS_FBVDD_PHASE 16.1G< 16.3C
PS_FBVDD_SNUB 16.1G< 16.3F
PS_FBVDD_UG 16.1G< 16.3C
PS_FBVDD_UG_R 16.1G< 16.2D
PS_FBVDD_VCC 16.1G< 16.2B
PS_NVVDD_BOOT 17.1G< 17.2C
PS_NVVDD_BOOT_RC 17.1G< 17.2D
PS_NVVDD_CP_RC 17.1G< 17.4C
PS_NVVDD_EN 17.1G< 17.3B
PS_NVVDD_EN* 17.1G< 17.4B
PS_NVVDD_FB 17.1G< 17.3C
PS_NVVDD_FB_RC 17.1G< 17.3F
PS_NVVDD_LG 17.1G< 17.3C
PS_NVVDD_PHASE 17.1G< 17.3C
PS_NVVDD_SNUB 17.1G< 17.3F
PS_NVVDD_UG 17.1G< 17.3C
PS_NVVDD_UG_R 17.1G< 17.2D
PS_NVVDD_VCC 17.1G< 17.2B
PS_NVVDD_VSEN 17.1G< 17.4G
PS_PEXVDD_CNTL 15.1G< 15.4E
PS_PEXVDD_FB 15.1G< 15.4F
ROM_CS* 13.2G< 13.3D
ROM_SCLK 13.2G< 13.3D< 14.4B>
14.4C
ROM_SI 13.2G< 13.3D< 14.3B>
14.3C
ROM_SO 13.2G< 13.3D< 14.3B>
14.3C
SNN_3V3FUSE_OC 15.5E
SNN_3V3_AUX 3.1B
SNN_BBIASN 13.3C
SNN_BBIASP 13.3C
SNN_CEC 13.3C
SNN_DP_CEC 11.4H
SNN_FBA0_A1 5.3A
SNN_FBA0_A11 5.3A
SNN_FBA0_J2 5.3A
SNN_FBA0_J10 5.3A
SNN_FBA0_L2 5.3A
SNN_FBA0_L10 5.3A
SNN_FBA0_M8 5.2A
SNN_FBA0_T1 5.3A
SNN_FBA0_T8 5.2A
SNN_FBA0_T11 5.3A
SNN_FBA1_A1 5.3C
SNN_FBA1_A11 5.3C
SNN_FBA1_J2 5.3C
SNN_FBA1_J10 5.3C
SNN_FBA1_L2 5.3C
SNN_FBA1_L10 5.3C
SNN_FBA1_M8 5.2C
SNN_FBA1_T1 5.3C
SNN_FBA1_T8 5.2C
SNN_FBA1_T11 5.3C
SNN_FBA2_A1 5.3E
SNN_FBA2_A11 5.3E
SNN_FBA2_J2 5.3E
SNN_FBA2_J10 5.3E
SNN_FBA2_L2 5.3E
SNN_FBA2_L10 5.3E
SNN_FBA2_M8 5.2E
SNN_FBA2_T1 5.3E
SNN_FBA2_T8 5.2E
SNN_FBA2_T11 5.3E
SNN_FBA3_A1 5.3F
SNN_FBA3_A11 5.3F
SNN_FBA3_J2 5.3F
SNN_FBA3_J10 5.3F
SNN_FBA3_L2 5.3F
SNN_FBA3_L10 5.3F
SNN_FBA3_M8 5.2F
SNN_FBA3_T1 5.3F
SNN_FBA3_T8 5.2F
SNN_FBA3_T11 5.3F
SNN_FBB_CMD1 4.3C
SNN_FBB_CMD4 4.3C
SNN_FBB_CMD14 4.3C
SNN_FBB_CMD17 4.3C
SNN_FBB_CMD31 4.4C
SNN_FBB_WCK0 4.4A
SNN_FBB_WCK1 4.4A
SNN_FBB_WCK2 4.4A
SNN_FBB_WCK3 4.4A
SNN_FBB_WCKN0 4.4A
SNN_FBB_WCKN1 4.4A
SNN_FBB_WCKN2 4.4A
SNN_FBB_WCKN3 4.4A
SNN_FBB0_A1 6.3A
SNN_FBB0_A11 6.3A
SNN_FBB0_J2 6.3A
SNN_FBB0_J10 6.3A
SNN_FBB0_L2 6.3A
SNN_FBB0_L10 6.3A
SNN_FBB0_M8 6.2A
SNN_FBB0_T1 6.3A
SNN_FBB0_T8 6.2A
SNN_FBB0_T11 6.3A
SNN_FBB1_A1 6.3C
SNN_FBB1_A11 6.3C
SNN_FBB1_J2 6.3C
SNN_FBB1_J10 6.3C
SNN_FBB1_L2 6.3C
SNN_FBB1_L10 6.3C
SNN_FBB1_M8 6.2C
SNN_FBB1_T1 6.3C
SNN_FBB1_T8 6.2C
SNN_FBB1_T11 6.3C
SNN_FBB2_A1 6.3E
SNN_FBB2_A11 6.3E
SNN_FBB2_J2 6.3E
SNN_FBB2_J10 6.3E
SNN_FBB2_L2 6.3E
SNN_FBB2_L10 6.3E
SNN_FBB2_M8 6.2E
SNN_FBB2_T1 6.3E
SNN_FBB2_T8 6.2E
SNN_FBB2_T11 6.3E
SNN_FBB3_A1 6.3F
SNN_FBB3_A11 6.3F
SNN_FBB3_J2 6.3F
SNN_FBB3_J10 6.3F
SNN_FBB3_L2 6.3F
SNN_FBB3_L10 6.3F
SNN_FBB3_M8 6.2F
SNN_FBB3_T1 6.3F
SNN_FBB3_T8 6.2F
SNN_FBB3_T11 6.3F
SNN_FBB_CMD1 4.3G
SNN_FBB_CMD4 4.3G
SNN_FBB_CMD14 4.3G
SNN_FBB_CMD17 4.3G

ASSEMBLY	BASE LEVEL GENERIC SCHEMATIC ONLY, COMMON & NO_STUFF ASSEMBLY NOTES AND BOM NOT FINAL
PAGE DETAIL	<edit here to insert page detail>

ALL NVIDIA DESIGN SPECIFICATIONS, REFERENCE SPECIFICATIONS, REFERENCE BOARDS, FILES, DRAWINGS, DIAGNOSTICS, LISTS AND OTHER DOCUMENTS OR INFORMATION (TOGETHER AND SEPARATELY, "MATERIALS") ARE BEING PROVIDED "AS IS". THE MATERIALS MAY CONTAIN KNOWN AND UNKNOWN VIOLATIONS OR DEVIATIONS OF INDUSTRY STANDARDS AND SPECIFICATIONS. NVIDIA MAKES NO WARRANTIES, EXPRESSED, IMPLIED, STATUTORY OR OTHERWISE WITH RESPECT TO THE MATERIALS OR OTHERWISE, AND EXPRESSLY DISCLAIMS ALL IMPLIED WARRANTIES INCLUDING, WITHOUT LIMITATION, THE WARRANTIES OF DESIGN, OF NONINFRINGEMENT, MERCHANTABILITY OR FITNESS FOR A PARTICULAR PURPOSE, OR ARISING FROM A COURSE OF DEALING, TRADE USAGE, TRADE PRACTICE, OR INDUSTRY STANDARDS.

NVIDIA CORPORATION
2701 SAN TOMAS EXPRESSWAY
SANTA CLARA, CA 95050, USA

NV_PN	600-11071-BASE-SCH		
PCB REV	P1071-A01	PAGE	<CON_PAGE_NUM> OF <CON_TOTAL_PAGES>
BOM REV	A	DATE	01-APR-2010

NVIDIA CONFIDENTIAL
2009 BOARD FOR NVIDIA

SNN_FBB_CMD31 4.4G
SNN_FBB_WCK0 4.4E
SNN_FBB_WCK1 4.4E
SNN_FBB_WCK2 4.4E
SNN_FBB_WCK3 4.4E
SNN_FBB_WCKN0 4.4E
SNN_FBB_WCKN1 4.4E
SNN_FBB_WCKN2 4.4E
SNN_FBB_WCKN3 4.4E
SNN_FB_DLLAVDD 4.5C
SNN_FB_PLLAVDD 4.5C
SNN_FB_VREF 4.5A
SNN_GPIO1 12.3B
SNN_GPIO3 13.2D
SNN_GPIO9 13.2D
SNN_GPIO10 13.2D
SNN_GPIO11 13.2D
SNN_GPIO12 13.2D
SNN_GPIO13 13.2D
SNN_GPIO14 13.2D
SNN_GPIO15 11.3D
SNN_GPIO17 13.2D
SNN_GPIO18 13.2D
SNN_GPIO19 12.4B
SNN_GPIO20 13.2D
SNN_GPIO22 13.2D
SNN_GPIO23 13.2D
SNN_GPIO24 13.2D
SNN_GPU_A2 3.2F
SNN_GPU_A7 3.2F
SNN_GPU_AA4 3.2F
SNN_GPU_AB4 3.2F
SNN_GPU_AB7 3.3F
SNN_GPU_AC5 3.3F
SNN_GPU_AD6 3.3F
SNN_GPU_AF6 3.3F
SNN_GPU_AG6 3.3F
SNN_GPU_AJ5 3.3F
SNN_GPU_AK15 3.3F
SNN_GPU_AL7 3.3F
SNN_GPU_B7 3.3F
SNN_GPU_C7 3.3F
SNN_GPU_D5 3.3F
SNN_GPU_D6 3.3F
SNN_GPU_D7 3.3F
SNN_GPU_E5 3.3F
SNN_GPU_E7 3.3F
SNN_GPU_F4 3.3F
SNN_GPU_G5 3.3F
SNN_GPU_H32 3.3F
SNN_GPU_P6 3.3F
SNN_GPU_U7 3.3F
SNN_GPU_V6 3.3F
SNN_GPU_Y4 3.3F
SNN_HDMI_CEC 11.3G
SNN_HDMI_RSVD 11.3G
SNN_I2CH_SCL 13.3D
SNN_I2CH_SDA 13.3D
SNN_I2CS_SCL 13.1D
SNN_I2CS_SDA 13.1D
SNN_IFPA_TXD3 10.3D
SNN_IFPA_TXD3* 10.2D
SNN_IFPB_TXC 10.3D
SNN_IFPB_TXC* 10.3D
SNN_IFPB_TXD7 10.3D
SNN_IFPB_TXD7* 10.3D
SNN_IFPC_AUX 12.2B
SNN_IFPC_AUX* 12.2B
SNN_IFPC_L0 12.3B
SNN_IFPC_L0* 12.3B
SNN_IFPC_L1 12.2B
SNN_IFPC_L1* 12.2B
SNN_IFPC_L2 12.2B
SNN_IFPC_L2* 12.2B
SNN_IFPC_L3 12.2B
SNN_IFPC_L3* 12.2B
SNN_IFPC_RSET 12.2A
SNN_IFPD_AUX 12.4B
SNN_IFPD_AUX* 12.4B
SNN_IFPD_L0 12.4B
SNN_IFPD_L0* 12.4B
SNN_IFPD_L1 12.4B
SNN_IFPD_L1* 12.4B
SNN_IFPD_L2 12.4B
SNN_IFPD_L2* 12.4B
SNN_IFPD_L3 12.4B
SNN_IFPD_L3* 12.4B
SNN_IFPD_RSET 12.4A
SNN_IFPE_AUX 11.2D
SNN_IFPE_AUX* 11.2D
SNN_IFPE_L0 11.3D
SNN_IFPE_L0* 11.3D
SNN_IFPE_L1 11.3D
SNN_IFPE_L1* 11.3D
SNN_IFPE_L2 11.3D
SNN_IFPE_L2* 11.3D
SNN_IFPE_L3 11.2D
SNN_IFPE_L3* 11.2D
SNN_MIOACAL_PD_VDD 12.2C
Q
SNN_MIOACAL_PU_GND 12.2C

SNN_MIOAD0 12.2D
SNN_MIOAD1 12.2D
SNN_MIOAD2 12.2D
SNN_MIOAD3 12.2D
SNN_MIOAD4 12.2D
SNN_MIOAD5 12.2D
SNN_MIOAD6 12.2D
SNN_MIOAD7 12.2D
SNN_MIOAD8 12.2D
SNN_MIOAD9 12.2D
SNN_MIOAD10 12.2D
SNN_MIOAD11 12.2D
SNN_MIOAD12 12.2D
SNN_MIOAD13 12.2D
SNN_MIOAD14 12.2D
SNN_MIOA_CLKIN 12.3D
SNN_MIOA_CLKOUT 12.3D
SNN_MIOA_CLKOUT* 12.3D
SNN_MIOA_CTL3 12.3D
SNN_MIOA_DE 12.3D
SNN_MIOA_HSYNC 12.3D
SNN_MIOA_VDDQ_P9 12.2C
SNN_MIOA_VDDQ_R9 12.2C
SNN_MIOA_VDDQ_T9 12.2C
SNN_MIOA_VDDQ_U9 12.2C
SNN_MIOA_VREF 12.2C
SNN_MIOA_VSYNC 12.3D
SNN_MIOBCAL_PD_VDD 12.4C
Q
SNN_MIOBCAL_PU_GND 12.4C
SNN_MIOBD0 12.3D
SNN_MIOBD1 12.3D
SNN_MIOBD2 12.4D
SNN_MIOBD3 12.4D
SNN_MIOBD4 12.4D
SNN_MIOBD5 12.4D
SNN_MIOBD6 12.4D
SNN_MIOBD7 12.4D
SNN_MIOBD8 12.4D
SNN_MIOBD9 12.4D
SNN_MIOBD10 12.4D
SNN_MIOBD11 12.4D
SNN_MIOBD12 12.4D
SNN_MIOBD13 12.4D
SNN_MIOBD14 12.4D
SNN_MIOB_CLKIN 12.5D
SNN_MIOB_CLKOUT 12.4D
SNN_MIOB_CLKOUT* 12.4D
SNN_MIOB_CTL3 12.4D
SNN_MIOB_DE 12.4D
SNN_MIOB_HSYNC 12.4D
SNN_MIOB_VDDQ_AA9 12.3C
SNN_MIOB_VDDQ_AB9 12.3C
SNN_MIOB_VDDQ_W9 12.4C
SNN_MIOB_VDDQ_Y9 12.4C
SNN_MIOB_VREF 12.4C
SNN_MIOB_VSYNC 12.4D
SNN_NVVDD_SENSE_1 3.4F
SNN_NVVDD_SENSE_3 3.4F
SNN_PEX_CLKREQ* 3.1D
SNN_PEX_PLL_HVDD 3.5F
SNN_PEX_TSTCLK_OUT 3.2D
SNN_PEX_TSTCLK_OUT 3.2D
*
SNN_PGOOD_OUT 13.4D
SNN_PS_PEXVDD_NC 15.4E
SNN_PS_PEXVDD_POK 15.4E
SNN_SMCLK 3.1C
SNN_SMDAT 3.1C
SNN_SPDIF 13.4D
SNN_SVDD_3V3 3.2F
SNN_XTAL_OUTBUFF 13.5D
STRAP0 13.2G< 13.3D> 14.4C
14.5B>
STRAP1 13.2G< 13.3D> 14.4B>
14.4C
STRAP2 13.2G< 13.3D> 14.4B>
14.4C
STRAP_REF0 13.1G< 13.4C
STRAP_REF1 13.1G< 13.4C
SYS_RST 15.1G< 15.3B< 15.3F>
SYS_RST* 15.1G< 15.3F
THERMDN 13.1C 13.1G<
THERMDP 13.1G< 13.2C
THERM_N 15.1G< 15.3C
THERM_P 15.1G< 15.3C
THERM_P* 15.1G< 15.2C
THERM_SHUTDOWN* 15.1G> 15.2D> 17.4A<
XTAL_IN 13.1G< 13.5B
XTAL_OUT 13.1G< 13.5D
XTAL_SSIN 13.1G< 13.5B

MSI CONFIDENTIAL
002998O(鎧鑫 RD(C)20110519002
FOR MB維修課(广德基) ONLY

ASSEMBLY	BASE LEVEL GENERIC SCHEMATIC ONLY, COMMON & NO_STUFF ASSEMBLY NOTES AND BOM NOT FINAL
PAGE DETAIL	<edit here to insert page detail>

ALL NVIDIA DESIGN SPECIFICATIONS, REFERENCE SPECIFICATIONS, REFERENCE BOARDS, FILES, DRAWINGS, DIAGNOSTICS, LISTS AND OTHER DOCUMENTS OR INFORMATION (TOGETHER AND SEPARATELY, "MATERIALS") ARE BEING PROVIDED 'AS IS'. THE MATERIALS MAY CONTAIN KNOWN AND UNKNOWN VIOLATIONS OR DEVIATIONS OF INDUSTRY STANDARDS AND SPECIFICATIONS. NVIDIA MAKES NO WARRANTIES, EXPRESSED, IMPLIED, STATUTORY OR OTHERWISE WITH RESPECT TO THE MATERIALS OR OTHERWISE, AND EXPRESSLY DISCLAIMS ALL IMPLIED WARRANTIES INCLUDING, WITHOUT LIMITATION, THE WARRANTIES OF DESIGN, OF NONINFRINGEMENT, MERCHANTABILITY OR FITNESS FOR A PARTICULAR PURPOSE, OR ARISING FROM A COURSE OF DEALING, TRADE USAGE, TRADE PRACTICE, OR INDUSTRY STANDARDS.

NVIDIA CORPORATION
2701 SAN TOMAS EXPRESSWAY
SANTA CLARA, CA 95050, USA

NV_PN	600-11071-BASE-SCH		
PCB REV	P1071-A01	PAGE	<CON_PAGE_NUM> OF <CON_TOTAL_PAGES>
BOM REV	A	DATE	01-APR-2010

Title: Cnvl Part Report
Design: p1071_a01
Date: Mar 31 14:19:50 2010

BKT1 [14.4F]
C1 [10.2F]
C2 [10.4F]
C3 [11.4F]
C4 [11.4F]
C5 [10.4F]
C6 [10.4E]
C7 [11.3G]
C8 [8.3C]
C9 [11.3E]
C10 [11.3E]
C11 [11.3E]
C12 [11.3E]
C13 [11.4E]
C14 [11.3E]
C15 [11.3E]
C16 [11.3E]
C17 [11.4E]
C18 [9.3F]
C19 [15.4C]
C20 [15.4C]
C21 [17.3F]
C22 [17.1F]
C23 [15.4B]
C24 [16.2E]
C25 [17.2E]
C26 [17.1F]
C27 [17.1E]
C28 [3.1B]
C29 [16.3G]
C30 [16.3H]
C31 [17.3H]
C32 [17.3H]
C33 [17.3G]
C34 [17.3G]
C35 [16.3F]
C36 [15.4D]
C37 [15.4E]
C38 [3.1A]
C39 [3.1A]
C40 [15.1B]
C41 [13.5D]
C42 [15.4E]
C43 [13.3E]
C44 [15.1C]
C45 [13.5B]
C46 [15.4G]
C47 [15.4H]
C48 [6.4C]
C49 [15.4G]
C50 [3.1G]
C51 [15.4G]
C52 [7.2D]
C53 [6.4D]
C54 [7.3F]
C55 [7.3E]
C56 [7.3D]
C57 [7.2E]
C58 [7.3D]
C59 [7.3D]
C60 [7.3D]
C61 [7.3E]
C62 [6.4H]
C63 [7.3F]
C64 [7.3E]
C65 [6.5C]
C66 [7.2B]
C67 [7.2C]
C68 [7.3C]
C69 [7.3C]
C70 [5.4H]
C71 [7.3B]
C72 [7.3B]
C73 [7.3A]
C74 [7.3B]
C75 [7.2C]
C76 [7.3C]
C77 [7.3C]
C78 [7.3C]
C79 [17.2F]
C80 [17.2F]
C81 [17.2F]
C82 [17.2G]
C83 [14.2D]
C84 [11.2E]
C85 [11.3E]
C86 [11.2F]
C87 [11.4H]
C88 [15.5E]
C89 [15.5F]
C90 [15.5G]
C501 [7.2C]
C502 [7.3B]
C503 [7.3B]
C504 [7.2B]
C505 [7.3B]
C506 [7.3C]
C507 [5.4D]
C508 [5.5C]
C509 [5.4C]
C510 [7.3C]
C511 [7.3B]
C512 [7.2C]
C513 [7.3C]
C514 [7.3A]
C515 [7.2B]
C516 [7.3A]
C517 [7.3C]
C518 [7.2A]
C519 [7.3B]
C520 [7.3C]
C521 [7.3C]
C522 [7.3C]
C523 [7.3B]
C524 [3.5D]
C525 [3.5D]
C526 [3.5D]
C527 [3.5D]
C528 [3.5D]
C529 [3.5D]
C530 [7.3E]
C531 [7.3E]
C532 [7.3E]
C533 [3.4D]
C534 [3.4D]
C535 [7.3F]
C536 [7.3E]
C537 [3.4D]
C538 [3.4D]
C539 [7.3D]
C540 [7.3E]
C541 [3.4D]
C542 [3.4D]
C543 [3.4D]
C544 [3.4D]
C545 [4.1C]
C546 [3.4D]
C547 [4.1D]
C548 [4.1C]
C549 [4.1D]
C550 [7.3D]
C551 [4.1D]
C552 [4.5D]
C553 [4.5C]
C554 [3.4D]
C555 [7.3E]
C556 [4.1C]
C557 [4.5D]
C558 [3.1F]
C559 [4.1D]
C560 [12.3G]
C561 [3.3D]
C562 [3.3D]
C563 [12.3G]
C564 [3.1F]
C565 [3.1F]
C566 [12.4F]
C567 [12.2G]
C568 [12.2G]
C569 [3.1F]
C570 [4.1C]
C571 [12.3G]
C572 [12.3G]
C573 [12.3F]
C574 [12.2F]
C575 [12.2F]
C576 [3.2F]
C577 [3.2F]
C578 [3.3D]
C579 [3.3D]
C580 [3.1F]
C581 [12.3G]
C582 [12.4G]
C583 [17.3G]
C584 [3.2F]
C585 [3.1G]
C586 [12.3F]
C587 [12.2F]
C588 [12.3F]
C589 [12.3F]
C590 [3.1F]
C591 [12.4F]
C592 [4.1D]
C593 [12.2G]
C594 [3.3D]
C595 [3.3D]
C596 [3.4F]
C597 [8.3A]
C598 [12.2G]
C599 [8.3B]
C600 [12.2F]
C601 [3.4F]
C602 [4.1D]
C603 [13.4B]
C604 [3.2F]
C605 [3.2G]
C606 [12.3G]
C607 [12.3F]
C608 [12.3F]
C609 [10.3B]
C610 [3.3F]
C611 [13.4B]
C612 [7.3E]
C613 [7.3E]
C614 [10.3B]
C615 [10.3B]
C616 [13.4B]
C617 [10.3C]
C618 [3.3D]
C619 [3.3D]
C620 [3.3F]
C621 [9.3B]
C622 [10.3B]
C623 [3.2F]
C624 [13.4A]
C625 [3.4G]
C626 [11.3C]
C627 [8.3A]
C628 [9.3A]
C629 [11.3B]
C630 [9.3A]
C631 [11.3B]
C632 [3.4G]
C633 [11.3B]
C634 [11.3B]
C635 [3.3D]
C636 [3.3D]
C637 [11.3B]
C638 [7.2E]
C639 [10.3B]
C640 [7.2E]
C641 [7.2F]
C642 [10.3B]
C643 [7.3D]
C644 [7.3E]
C645 [3.2D]
C646 [3.2D]
C647 [15.1F]
C648 [7.2E]
C649 [3.2D]
C650 [3.2D]
C651 [7.2D]
C652 [15.3F]
C653 [7.3D]
C654 [7.3D]
C655 [7.2D]
C656 [15.2E]
C657 [3.2D]
C658 [3.2D]
C659 [15.3C]
C660 [13.2A]
C661 [15.2C]
C662 [14.2B]
C663 [16.3G]
C664 [17.3G]
C665 [17.3G]
C666 [17.1F]
C667 [17.1F]
C668 [3.1B]
C669 [14.2C]
C670 [13.2F]
C671 [17.4A]
C672 [14.2B]
C673 [9.5E]
C674 [9.5E]
C675 [16.3B]
C676 [14.2E]
C677 [9.4E]
C678 [9.4E]
C679 [16.2D]
C680 [9.4E]
C681 [9.4E]
C682 [16.3D]
C683 [16.3F]
C684 [16.4D]
C685 [16.4C]
C686 [17.3B]
C687 [17.2D]
C688 [17.3D]
C689 [17.3F]
C690 [17.4C]
C691 [8.5E]
C692 [8.4E]
C693 [8.4E]
C694 [17.4G]
C695 [17.4D]
C696 [8.5E]
C697 [8.4E]
C698 [8.4E]
CN1 [3.3C]
D1 [10.4E]
D2 [11.4E]
D3 [17.3F]
D4 [17.3F]
D5 [15.4A]
D6 [16.3E]
D7 [16.3F]
D8 [14.2D]
D501 [14.2G]
D502 [13.1E]
D503 [16.2C]
D504 [17.2C]
F1 [15.4D]
G1 [3.3E]
G1 [4.3F 4.3B]
G1 [8.3C]
G1 [9.3C]
G1 [10.3D]
G1 [11.3D]
G1 [12.3B 12.3E 12.2D 12.4D 12.3H 12.4B]
G1 [13.3C 13.2C 13.4C]
J1 [11.3H]
J2 [10.3G]
J3 [9.3C]
J4 [14.2H]
J5 [14.2E]
J6 [13.2F]
J7 [11.4H]
J501 [13.2A]
L1 [17.3F]
L2 [16.3F]
L3 [17.2F]
L4 [16.2F]
L501 [3.4G]
L502 [9.5E]
L503 [9.4E]
L504 [9.3E]
L505 [8.5E]
L506 [8.3E]
L507 [8.4E]
LB1 [15.1C]
LB2 [14.2D]
LB501 [4.5D]
LB502 [11.3B]
LB503 [10.3B]
LB504 [13.4A]
LB505 [11.2B]
LB506 [10.2B]
LB507 [15.1E]
M1 [6.4F 6.5D 6.2D]
M2 [6.4G 6.2B 6.5F]
M3 [6.2F 6.4G 6.5H]
M4 [6.4H 6.2G 6.5G]
M5 [5.2D 5.4F 5.5D]
M6 [5.4G 5.2B 5.5F]
M7 [5.4G 5.5H 5.2G]
M8 [5.4H 5.5G 5.2F]
MEC1 [14.3F]
MEC2 [14.3F]
MEC3 [9.4G]
MEC4 [14.3F]
MEC5 [14.4F]
MEC6 [14.4F]
MEC7 [14.4F]
Q1 [17.4E]
Q2 [17.5E]
Q3 [17.5F]
Q4 [17.4F]
Q5 [11.2F]
Q6 [11.3F]
Q7 [17.3E]
Q8 [17.3E]
Q9 [17.2E]
Q10 [16.3E 16.2E]
Q11 [14.2D]
Q12 [11.2G]
Q13 [11.2H]
Q14 [11.2E]
Q15 [11.3E]
Q501 [15.3G]
Q502 [15.3F]
Q503 [15.3C]
Q504 [15.2C]
Q505 [14.2B]
Q506 [17.4B]
Q507 [16.4B]
Q508 [16.4B]
Q509 [11.5C]
Q510 [17.4B]
R1 [15.4D]
R2 [10.4F]
R3 [11.4F]
R4 [9.1D]
R5 [11.4E]
R6 [17.4E]
R7 [17.4E]
R8 [17.4F]
R9 [17.4F]
R10 [10.4E]
R11 [8.2D]
R12 [10.4E]
R13 [11.2F]
R14 [11.3F]
R15 [11.4E]
R16 [8.2D]
R17 [9.2D]
R18 [8.2D]
R19 [9.2D]
R20 [9.2D]
R21 [8.3D]
R22 [9.3D]
R23 [9.1D]
R24 [8.3D]
R25 [9.3D]
R26 [17.3E]
R27 [11.2E]
R28 [11.3E]
R29 [17.3F]
R30 [15.4A]
R31 [15.4B]
R32 [16.2D]
R33 [16.3E]
R34 [16.3F]
R35 [15.4E]
R36 [14.3B]
R37 [14.3C]
R38 [15.4E]
R39 [14.4B]
R40 [14.3C]
R41 [14.4C]
R42 [14.3B]
R43 [15.4G]
R44 [13.3E]
R45 [15.4G]
R46 [6.4C]
R47 [6.4B]
R48 [6.4B]
R49 [6.4B]
R50 [14.4B]
R51 [14.4C]
R52 [4.4H]
R53 [14.4C]
R54 [14.5C]
R55 [13.4B]
R56 [13.4B]
R57 [10.3C]
R58 [14.4B]
R59 [14.5B]
R60 [6.3D]
R61 [6.4D]
R62 [6.3E]
R63 [6.4H]
R64 [6.3H]
R65 [6.5B]
R66 [6.5B]
R67 [6.5B]
R68 [6.5C]
R69 [5.4H]
R70 [5.3H]
R71 [4.4D]
R72 [5.3C]
R73 [5.3A]
R74 [5.3F]
R75 [5.3E]
R76 [14.2E]
R77 [11.2E]
R78 [11.3E]
R79 [11.2E]
R80 [11.3E]
R81 [11.2F]
R82 [11.3F]
R83 [11.2G]
R84 [11.2G]
R85 [11.2H]
R86 [11.3H]
R501 [4.3D]
R502 [5.5C]
R503 [5.4C]
R504 [4.4D]
R505 [5.5B]
R506 [5.4B]
R507 [5.5B]
R508 [5.4B]
R509 [5.5B]
R510 [5.4B]
R511 [4.3D]
R512 [4.4D]
R513 [4.4H]
R514 [6.3F]
R515 [4.4H]
R516 [3.5F]
R517 [4.5G]
R518 [4.5G]
R519 [4.5G]
R520 [3.5F]
R521 [8.3B]
R522 [8.4D]
R523 [8.4D]
R524 [8.5D]
R525 [9.3B]
R526 [8.3A]
R527 [8.3A]
R528 [9.4D]
R529 [9.4D]
R530 [9.5D]
R531 [11.3C]
R532 [13.5B]
R533 [4.3H]
R534 [15.3G]
R535 [15.3F]
R536 [6.3C]
R537 [4.3H]
R538 [13.2B]
R539 [13.2B]
R540 [13.2B]
R541 [15.3F]
R542 [15.3C]
R543 [15.3C]
R544 [15.3F]
R545 [15.2C]
R546 [15.2C]
R547 [15.2C]
R548 [13.2B]
R549 [17.4D]
R550 [17.5D]
R551 [17.5G]
R552 [17.4G]
R553 [13.2B]
R554 [13.2B]
R555 [17.4D]
R556 [17.5D]
R557 [17.5G]
R558 [17.4G]
R559 [14.2G]
R560 [14.2G]
R561 [13.2E]
R562 [13.1E]
R563 [13.1E]
R564 [13.1E]
R565 [14.2C]
R566 [14.2C]
R567 [14.2D]
R568 [17.4A]
R569 [14.1C]
R570 [17.4B]
R571 [9.5D]
R572 [16.2B]
R573 [9.4D]
R574 [16.2D]
R575 [17.2D]
R576 [16.3G]
R577 [16.4F]
R578 [9.4D]
R579 [16.4D]
R580 [16.4E]
R581 [16.3F]
R582 [16.4B]
R583 [16.4A]
R584 [16.3C]
R585 [17.2D]
R586 [16.4D]
R587 [17.2B]
R588 [17.3C]
R589 [17.3G]
R590 [8.5D]
R591 [8.4D]
R592 [8.4D]
R593 [17.4G]
R594 [11.4C]
R595 [11.4C]
R596 [11.4C]
R597 [11.4C]
R598 [17.4D]
R599 [17.3F]
R600 [17.4E]
R601 [17.4F]
R602 [17.4D]
R603 [11.5C]
R604 [11.5C]
R605 [11.4C]
R606 [11.4C]
TP1 [13.1C]
TP2 [13.2C]
TP3 [4.4G]
TP4 [4.4G]
TP5 [4.4C]
TP6 [4.4C]
U1 [8.2D 8.3D]
U1 [9.3D 9.2D]
U2 [15.4C]
U3 [15.5C]
U4 [15.4F]
U5 [13.3E]
U6 [15.5F]
U501 [15.3E]
U502 [13.1F]
U503 [14.2C]
U504 [16.3C]
U505 [17.3C]
Y1 [13.5C]
Y2 [13.5C]

NVIDIA CONFIDENTIAL
0029050 (C) 2011051902
FOR MB 维修资料 仅供 广德 ONLY

ASSEMBLY	BASE LEVEL GENERIC SCHEMATIC ONLY, COMMON & NO_STUFF ASSEMBLY NOTES AND BOM NOT FINAL
PAGE DETAIL	<edit here to insert page detail>

ALL NVIDIA DESIGN SPECIFICATIONS, REFERENCE SPECIFICATIONS, REFERENCE BOARDS, FILES, DRAWINGS, DIAGNOSTICS, LISTS AND OTHER DOCUMENTS OR INFORMATION (TOGETHER AND SEPARATELY, "MATERIALS") ARE BEING PROVIDED "AS IS". THE MATERIALS MAY CONTAIN KNOWN AND UNKNOWN VIOLATIONS OR DEVIATIONS OF INDUSTRY STANDARDS AND SPECIFICATIONS. NVIDIA MAKES NO WARRANTIES, EXPRESSED, IMPLIED, STATUTORY OR OTHERWISE WITH RESPECT TO THE MATERIALS OR OTHERWISE, AND EXPRESSLY DISCLAIMS ALL IMPLIED WARRANTIES INCLUDING, WITHOUT LIMITATION, THE WARRANTIES OF DESIGN, OF NONINFRINGEMENT, MERCHANTABILITY OR FITNESS FOR A PARTICULAR PURPOSE, OR ARISING FROM A COURSE OF DEALING, TRADE USAGE, TRADE PRACTICE, OR INDUSTRY STANDARDS.

NVIDIA CORPORATION
2701 SAN TOMAS EXPRESSWAY
SANTA CLARA, CA 95050, USA

NV_PN	600-11071-BASE-SCH		
PCB REV	P1071-A01	PAGE	<CON_PAGE_NUM> OF <CON_TOTAL_PAGES>
BOM REV	A	DATE	01-APR-2010