(1) PCI-EXPRESS EDGE CONNECTOR

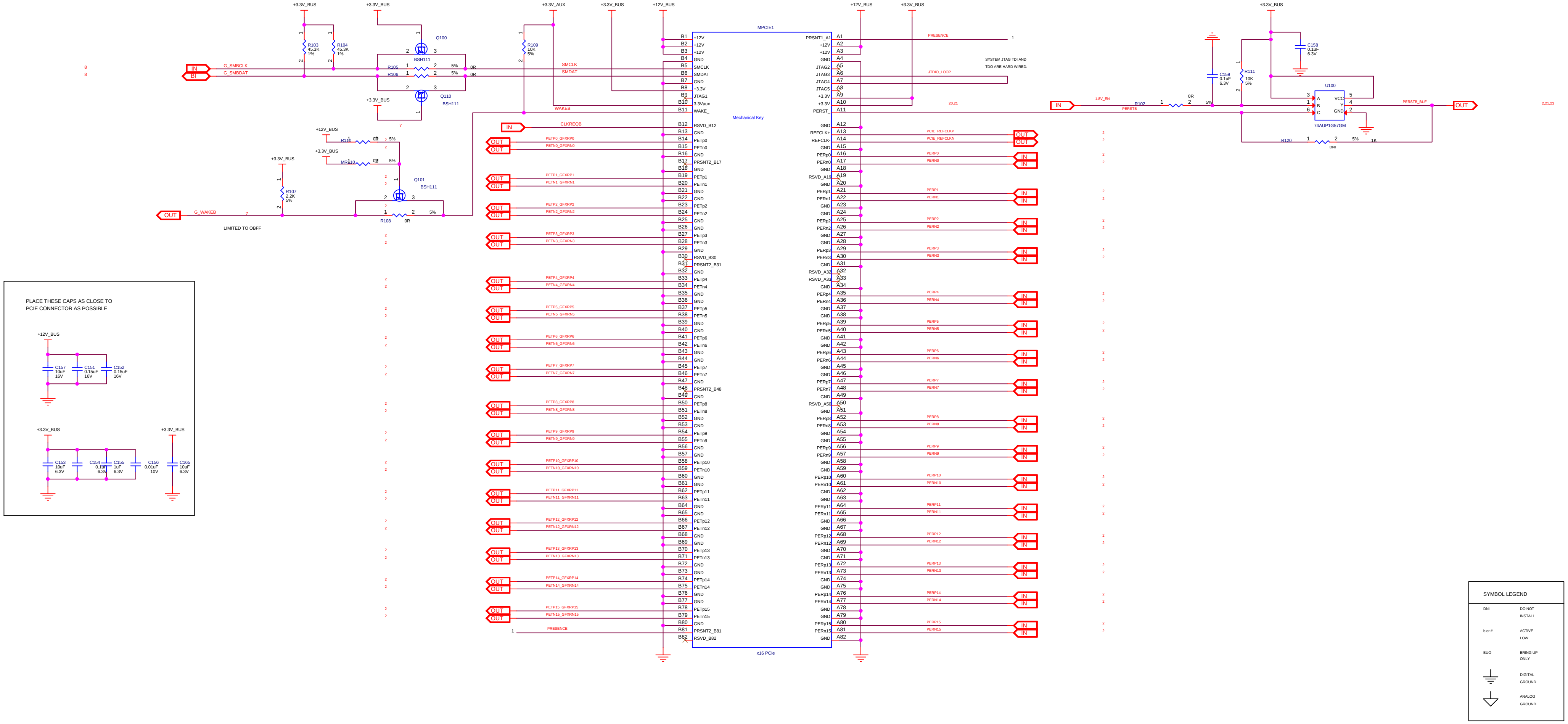
+3.3V_BUS
+3.3V_AUX
+12V_BUS
R103 45.3K 1%
R104 45.3K 1%
Q100 BSH111
Q110 BSH111
Q101 BSH111
R105 0R 5%
R106 0R 5%
R108 0R 5%
R109 10K 5%
R110 0R 5%
MR110
R107 2.2K 5%
IN G_SMBCLK
BI G_SMBDAT
OUT G_WAKEB
LIMITED TO OBFF
SMCLK
SMDAT
WAKEB
IN CLKREQB
PLACE THESE CAPS AS CLOSE TO
PCIE CONNECTOR AS POSSIBLE
C157 10uF 16V
C151 0.15uF 16V
C152 0.15uF 16V
C153 10uF 6.3V
C154 0.1uF 6.3V
C155 1uF 6.3V
C156 0.01uF 10V
C165 10uF 6.3V
MPCIE1
Mechanical Key
x16 PCIe
B1 +12V
B2 +12V
B3 +12V
B4 GND
B5 SMCLK
B6 SMDAT
B7 GND
B8 +3.3V
B9 JTAG1
B10 3.3Vaux
B11 WAKE_
B12 RSVD_B12
B13 GND
B14 PETp0
B15 PETn0
B16 GND
B17 PRSNT2_B17
B18 GND
B19 PETp1
B20 PETn1
B21 GND
B22 GND
B23 PETp2
B24 PETn2
B25 GND
B26 GND
B27 PETp3
B28 PETn3
B29 GND
B30 RSVD_B30
B31 PRSNT2_B31
B32 GND
B33 PETp4
B34 PETn4
B35 GND
B36 GND
B37 PETp5
B38 PETn5
B39 GND
B40 GND
B41 PETp6
B42 PETn6
B43 GND
B44 GND
B45 PETp7
B46 PETn7
B47 GND
B48 PRSNT2_B48
B49 GND
B50 PETp8
B51 PETn8
B52 GND
B53 GND
B54 PETp9
B55 PETn9
B56 GND
B57 GND
B58 PETp10
B59 PETn10
B60 GND
B61 GND
B62 PETp11
B63 PETn11
B64 GND
B65 GND
B66 PETp12
B67 PETn12
B68 GND
B69 GND
B70 PETp13
B71 PETn13
B72 GND
B73 GND
B74 PETp14
B75 PETn14
B76 GND
B77 GND
B78 PETp15
B79 PETn15
B80 GND
B81 PRSNT2_B81
B82 RSVD_B82
PRSNT1_A1 A1
+12V A2
+12V A3
GND A4
JTAG2 A5
JTAG3 A6
JTAG4 A7
JTAG5 A8
+3.3V A9
+3.3V A10
PERST_ A11
GND A12
REFCLK+ A13
REFCLK- A14
GND A15
PERp0 A16
PERn0 A17
GND A18
RSVD_A19 A19
GND A20
PERp1 A21
PERn1 A22
GND A23
GND A24
PERp2 A25
PERn2 A26
GND A27
GND A28
PERp3 A29
PERn3 A30
GND A31
RSVD_A32 A32
RSVD_A33 A33
GND A34
PERp4 A35
PERn4 A36
GND A37
GND A38
PERp5 A39
PERn5 A40
GND A41
GND A42
PERp6 A43
PERn6 A44
GND A45
GND A46
PERp7 A47
PERn7 A48
GND A49
RSVD_A50 A50
GND A51
PERp8 A52
PERn8 A53
GND A54
GND A55
PERp9 A56
PERn9 A57
GND A58
GND A59
PERp10 A60
PERn10 A61
GND A62
GND A63
PERp11 A64
PERn11 A65
GND A66
GND A67
PERp12 A68
PERn12 A69
GND A70
GND A71
PERp13 A72
PERn13 A73
GND A74
GND A75
PERp14 A76
PERn14 A77
GND A78
GND A79
PERp15 A80
PERn15 A81
GND A82
PETP0_GFXRP0 … PETP15_GFXRP15
PETN0_GFXRN0 … PETN15_GFXRN15
PERP0 … PERP15
PERN0 … PERN15
PRESENCE
JTDIO_LOOP
SYSTEM JTAG TDI AND
TDO ARE HARD WIRED.
PCIE_REFCLKP
PCIE_REFCLKN
20,21
IN 1.8V_EN
PERSTB
R102 0R 5%
C159 0.1uF 6.3V
R111 10K 5%
C158 0.1uF 6.3V
U100 74AUP1G57GM
A B C VCC Y GND
PERSTB_BUF
OUT
2,21,23
R120 1K 5% DNI
SYMBOL LEGEND
DNI DO NOT INSTALL
b or # ACTIVE LOW
BUO BRING UP ONLY
DIGITAL GROUND
ANALOG GROUND

MICRO-STAR INT'L CO.,LTD

MS-V341

Size	Document Description	Rev
Custom	TABLE OF CONTENTS	1.0

Date: Tuesday, August 09, 2016 | Sheet 1 of 26

(2) ELLESMERE PCIE INTERFACE

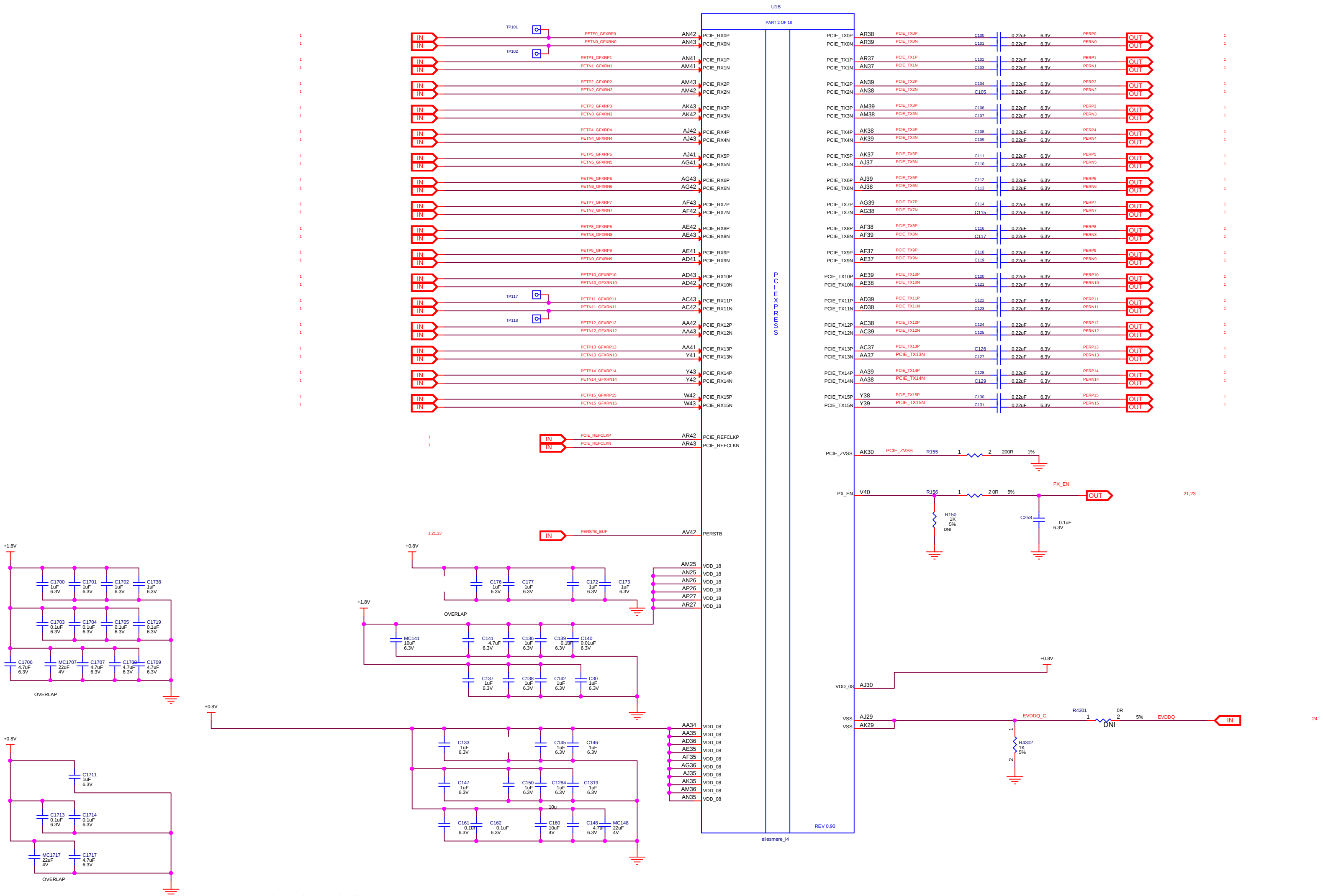
U1B
PART 2 OF 18
PCIE_RX0P AN42 PETP0_GFXRP0 IN
PCIE_RX0N AN43 PETN0_GFXRN0 IN
TP101
TP102
PCIE_RX1P AN41 PETP1_GFXRP1 IN
PCIE_RX1N AM41 PETN1_GFXRN1 IN
PCIE_RX2P AM43 PETP2_GFXRP2 IN
PCIE_RX2N AM42 PETN2_GFXRN2 IN
PCIE_RX3P AK43 PETP3_GFXRP3 IN
PCIE_RX3N AK42 PETN3_GFXRN3 IN
PCIE_RX4P AJ42 PETP4_GFXRP4 IN
PCIE_RX4N AJ43 PETN4_GFXRN4 IN
PCIE_RX5P AJ41 PETP5_GFXRP5 IN
PCIE_RX5N AG41 PETN5_GFXRN5 IN
PCIE_RX6P AG43 PETP6_GFXRP6 IN
PCIE_RX6N AG42 PETN6_GFXRN6 IN
PCIE_RX7P AF43 PETP7_GFXRP7 IN
PCIE_RX7N AF42 PETN7_GFXRN7 IN
PCIE_RX8P AE42 PETP8_GFXRP8 IN
PCIE_RX8N AE43 PETN8_GFXRN8 IN
PCIE_RX9P AE41 PETP9_GFXRP9 IN
PCIE_RX9N AD41 PETN9_GFXRN9 IN
PCIE_RX10P AD43 PETP10_GFXRP10 IN
PCIE_RX10N AD42 PETN10_GFXRN10 IN
TP117
TP118
PCIE_RX11P AC43 PETP11_GFXRP11 IN
PCIE_RX11N AC42 PETN11_GFXRN11 IN
PCIE_RX12P AA42 PETP12_GFXRP12 IN
PCIE_RX12N AA43 PETN12_GFXRN12 IN
PCIE_RX13P AA41 PETP13_GFXRP13 IN
PCIE_RX13N Y41 PETN13_GFXRN13 IN
PCIE_RX14P Y43 PETP14_GFXRP14 IN
PCIE_RX14N Y42 PETN14_GFXRN14 IN
PCIE_RX15P W42 PETP15_GFXRP15 IN
PCIE_RX15N W43 PETN15_GFXRN15 IN
PCIE_TX0P AR38 PCIE_TX0P C100 0.22uF 6.3V PERP0 OUT
PCIE_TX0N AR39 PCIE_TX0N C101 0.22uF 6.3V PERN0 OUT
PCIE_TX1P AR37 PCIE_TX1P C102 0.22uF 6.3V PERP1 OUT
PCIE_TX1N AN37 PCIE_TX1N C103 0.22uF 6.3V PERN1 OUT
PCIE_TX2P AN39 PCIE_TX2P C104 0.22uF 6.3V PERP2 OUT
PCIE_TX2N AN38 PCIE_TX2N C105 0.22uF 6.3V PERN2 OUT
PCIE_TX3P AM39 PCIE_TX3P C106 0.22uF 6.3V PERP3 OUT
PCIE_TX3N AM38 PCIE_TX3N C107 0.22uF 6.3V PERN3 OUT
PCIE_TX4P AK38 PCIE_TX4P C108 0.22uF 6.3V PERP4 OUT
PCIE_TX4N AK39 PCIE_TX4N C109 0.22uF 6.3V PERN4 OUT
PCIE_TX5P AK37 PCIE_TX5P C111 0.22uF 6.3V PERP5 OUT
PCIE_TX5N AJ37 PCIE_TX5N C110 0.22uF 6.3V PERN5 OUT
PCIE_TX6P AJ39 PCIE_TX6P C112 0.22uF 6.3V PERP6 OUT
PCIE_TX6N AJ38 PCIE_TX6N C113 0.22uF 6.3V PERN6 OUT
PCIE_TX7P AG39 PCIE_TX7P C114 0.22uF 6.3V PERP7 OUT
PCIE_TX7N AG38 PCIE_TX7N C115 0.22uF 6.3V PERN7 OUT
PCIE_TX8P AF38 PCIE_TX8P C116 0.22uF 6.3V PERP8 OUT
PCIE_TX8N AF39 PCIE_TX8N C117 0.22uF 6.3V PERN8 OUT
PCIE_TX9P AF37 PCIE_TX9P C118 0.22uF 6.3V PERP9 OUT
PCIE_TX9N AE37 PCIE_TX9N C119 0.22uF 6.3V PERN9 OUT
PCIE_TX10P AE39 PCIE_TX10P C120 0.22uF 6.3V PERP10 OUT
PCIE_TX10N AE38 PCIE_TX10N C121 0.22uF 6.3V PERN10 OUT
PCIE_TX11P AD39 PCIE_TX11P C122 0.22uF 6.3V PERP11 OUT
PCIE_TX11N AD38 PCIE_TX11N C123 0.22uF 6.3V PERN11 OUT
PCIE_TX12P AC38 PCIE_TX12P C124 0.22uF 6.3V PERP12 OUT
PCIE_TX12N AC39 PCIE_TX12N C125 0.22uF 6.3V PERN12 OUT
PCIE_TX13P AC37 PCIE_TX13P C126 0.22uF 6.3V PERP13 OUT
PCIE_TX13N AA37 PCIE_TX13N C127 0.22uF 6.3V PERN13 OUT
PCIE_TX14P AA39 PCIE_TX14P C128 0.22uF 6.3V PERP14 OUT
PCIE_TX14N AA38 PCIE_TX14N C129 0.22uF 6.3V PERN14 OUT
PCIE_TX15P Y38 PCIE_TX15P C130 0.22uF 6.3V PERP15 OUT
PCIE_TX15N Y39 PCIE_TX15N C131 0.22uF 6.3V PERN15 OUT
P C I E X P R E S S
PCIE_REFCLKP AR42 PCIE_REFCLKP IN
PCIE_REFCLKN AR43 PCIE_REFCLKN IN
PCIE_ZVSS AK30 PCIE_ZVSS R155 1 2 200R 1%
PX_EN V40 R156 1 2 0R 5%
R150 1K 5% DNI
C258 0.1uF 6.3V
PX_EN OUT 21,23
PERSTB AV42 PERSTB_BUF IN 1,21,23
VDD_18 AM25
VDD_18 AN25
VDD_18 AN26
VDD_18 AP26
VDD_18 AP27
VDD_18 AR27
VDD_08 AA34
VDD_08 AA35
VDD_08 AD36
VDD_08 AE35
VDD_08 AF35
VDD_08 AG36
VDD_08 AJ35
VDD_08 AK35
VDD_08 AM36
VDD_08 AN35
VDD_08 AJ30
+0.8V
VSS AJ29
VSS AK29
EVDDQ_G
R4301 1 2 0R 5% DNI
EVDDQ IN 24
R4302 1 2 1K 5%
REV 0.90
ellesmere_l4
+1.8V
C1700 1uF 6.3V
C1701 1uF 6.3V
C1702 1uF 6.3V
C1738 1uF 6.3V
C1703 0.1uF 6.3V
C1704 0.1uF 6.3V
C1705 0.1uF 6.3V
C1719 0.1uF 6.3V
C1706 4.7uF 6.3V
MC1707 22uF 4V
C1707 4.7uF 6.3V
C1708 4.7uF 6.3V
C1709 4.7uF 6.3V
OVERLAP
+0.8V
C176 1uF 6.3V
C177 1uF 6.3V
C172 1uF 6.3V
C173 1uF 6.3V
OVERLAP
+1.8V
MC141 10uF 6.3V
C141 4.7uF 6.3V
C136 1uF 6.3V
C139 0.1uF 6.3V
C140 0.01uF 6.3V
C137 1uF 6.3V
C138 1uF 6.3V
C142 1uF 6.3V
C30 1uF 6.3V
+0.8V
C1711 1uF 6.3V
C1713 0.1uF 6.3V
C1714 0.1uF 6.3V
MC1717 22uF 4V
C1717 4.7uF 6.3V
OVERLAP
+0.8V
C133 1uF 6.3V
C145 1uF 6.3V
C146 1uF 6.3V
C147 1uF 6.3V
C150 1uF 6.3V
C1284 1uF 6.3V
C1319 1uF 6.3V
10u
C161 0.1uF 6.3V
C162 0.1uF 6.3V
C160 10uF 4V
C148 4.7uF 6.3V
MC148 22uF 4V

Check BOM for more detail

MSI

MICRO-STAR INT'L CO.,LTD

MS-V341

Size	Document Description	Rev
Custom	TABLE OF CONTENTS	1.0

Date: Tuesday, August 09, 2016 | Sheet 2 of 26

(3) ELLESMERE MEM INTERFACE CH A/B

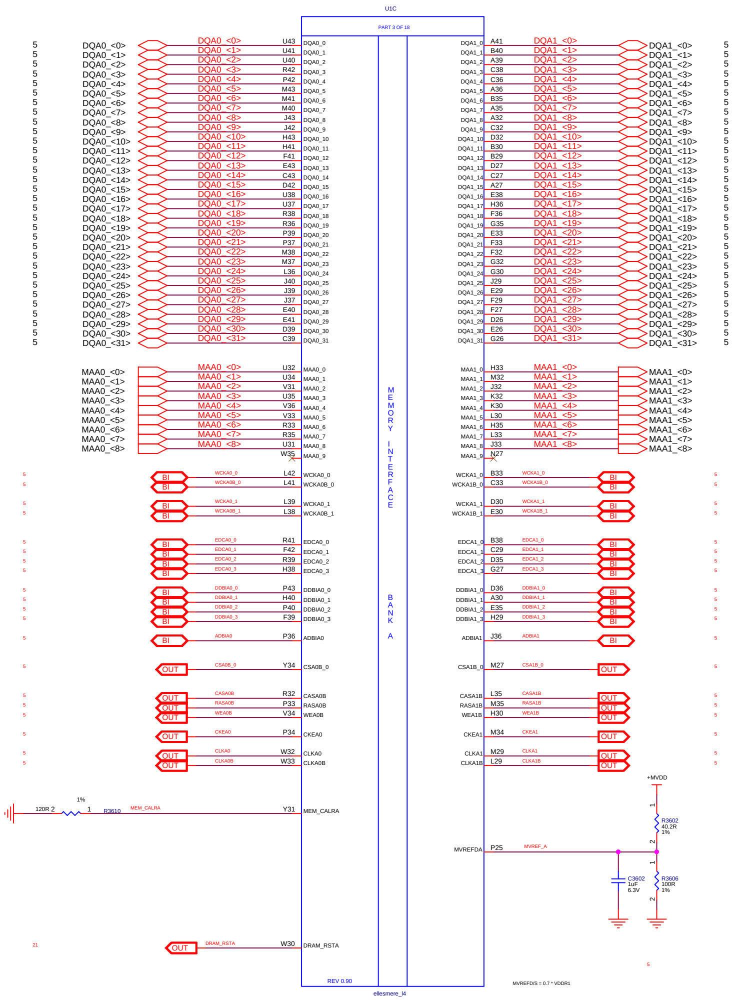
U1C
PART 3 OF 18
MEMORY INTERFACE BANK A
5 DQA0_<0> DQA0_<0> U43 DQA0_0 | DQA1_0 A41 DQA1_<0> DQA1_<0> 5
5 DQA0_<1> DQA0_<1> U41 DQA0_1 | DQA1_1 B40 DQA1_<1> DQA1_<1> 5
5 DQA0_<2> DQA0_<2> U40 DQA0_2 | DQA1_2 A39 DQA1_<2> DQA1_<2> 5
5 DQA0_<3> DQA0_<3> R42 DQA0_3 | DQA1_3 C38 DQA1_<3> DQA1_<3> 5
5 DQA0_<4> DQA0_<4> P42 DQA0_4 | DQA1_4 C36 DQA1_<4> DQA1_<4> 5
5 DQA0_<5> DQA0_<5> M43 DQA0_5 | DQA1_5 A36 DQA1_<5> DQA1_<5> 5
5 DQA0_<6> DQA0_<6> M41 DQA0_6 | DQA1_6 B35 DQA1_<6> DQA1_<6> 5
5 DQA0_<7> DQA0_<7> M40 DQA0_7 | DQA1_7 A35 DQA1_<7> DQA1_<7> 5
5 DQA0_<8> DQA0_<8> J43 DQA0_8 | DQA1_8 A32 DQA1_<8> DQA1_<8> 5
5 DQA0_<9> DQA0_<9> J42 DQA0_9 | DQA1_9 C32 DQA1_<9> DQA1_<9> 5
5 DQA0_<10> DQA0_<10> H43 DQA0_10 | DQA1_10 D32 DQA1_<10> DQA1_<10> 5
5 DQA0_<11> DQA0_<11> H41 DQA0_11 | DQA1_11 B30 DQA1_<11> DQA1_<11> 5
5 DQA0_<12> DQA0_<12> F41 DQA0_12 | DQA1_12 B29 DQA1_<12> DQA1_<12> 5
5 DQA0_<13> DQA0_<13> E43 DQA0_13 | DQA1_13 D27 DQA1_<13> DQA1_<13> 5
5 DQA0_<14> DQA0_<14> C43 DQA0_14 | DQA1_14 C27 DQA1_<14> DQA1_<14> 5
5 DQA0_<15> DQA0_<15> D42 DQA0_15 | DQA1_15 A27 DQA1_<15> DQA1_<15> 5
5 DQA0_<16> DQA0_<16> U38 DQA0_16 | DQA1_16 E38 DQA1_<16> DQA1_<16> 5
5 DQA0_<17> DQA0_<17> U37 DQA0_17 | DQA1_17 H36 DQA1_<17> DQA1_<17> 5
5 DQA0_<18> DQA0_<18> R38 DQA0_18 | DQA1_18 F36 DQA1_<18> DQA1_<18> 5
5 DQA0_<19> DQA0_<19> R36 DQA0_19 | DQA1_19 G35 DQA1_<19> DQA1_<19> 5
5 DQA0_<20> DQA0_<20> P39 DQA0_20 | DQA1_20 E33 DQA1_<20> DQA1_<20> 5
5 DQA0_<21> DQA0_<21> P37 DQA0_21 | DQA1_21 F33 DQA1_<21> DQA1_<21> 5
5 DQA0_<22> DQA0_<22> M38 DQA0_22 | DQA1_22 F32 DQA1_<22> DQA1_<22> 5
5 DQA0_<23> DQA0_<23> M37 DQA0_23 | DQA1_23 G32 DQA1_<23> DQA1_<23> 5
5 DQA0_<24> DQA0_<24> L36 DQA0_24 | DQA1_24 G30 DQA1_<24> DQA1_<24> 5
5 DQA0_<25> DQA0_<25> J40 DQA0_25 | DQA1_25 J29 DQA1_<25> DQA1_<25> 5
5 DQA0_<26> DQA0_<26> J39 DQA0_26 | DQA1_26 E29 DQA1_<26> DQA1_<26> 5
5 DQA0_<27> DQA0_<27> J37 DQA0_27 | DQA1_27 F29 DQA1_<27> DQA1_<27> 5
5 DQA0_<28> DQA0_<28> E40 DQA0_28 | DQA1_28 F27 DQA1_<28> DQA1_<28> 5
5 DQA0_<29> DQA0_<29> E41 DQA0_29 | DQA1_29 D26 DQA1_<29> DQA1_<29> 5
5 DQA0_<30> DQA0_<30> D39 DQA0_30 | DQA1_30 E26 DQA1_<30> DQA1_<30> 5
5 DQA0_<31> DQA0_<31> C39 DQA0_31 | DQA1_31 G26 DQA1_<31> DQA1_<31> 5
MAA0_<0> MAA0_<0> U32 MAA0_0 | MAA1_0 H33 MAA1_<0> MAA1_<0>
MAA0_<1> MAA0_<1> U34 MAA0_1 | MAA1_1 M32 MAA1_<1> MAA1_<1>
MAA0_<2> MAA0_<2> V31 MAA0_2 | MAA1_2 J32 MAA1_<2> MAA1_<2>
MAA0_<3> MAA0_<3> U35 MAA0_3 | MAA1_3 K32 MAA1_<3> MAA1_<3>
MAA0_<4> MAA0_<4> V36 MAA0_4 | MAA1_4 K30 MAA1_<4> MAA1_<4>
MAA0_<5> MAA0_<5> V33 MAA0_5 | MAA1_5 L30 MAA1_<5> MAA1_<5>
MAA0_<6> MAA0_<6> R33 MAA0_6 | MAA1_6 H35 MAA1_<6> MAA1_<6>
MAA0_<7> MAA0_<7> R35 MAA0_7 | MAA1_7 L33 MAA1_<7> MAA1_<7>
MAA0_<8> MAA0_<8> U31 MAA0_8 | MAA1_8 J33 MAA1_<8> MAA1_<8>
W35 MAA0_9 | MAA1_9 N27
5 BI WCKA0_0 L42 WCKA0_0 | WCKA1_0 B33 WCKA1_0 BI 5
5 BI WCKA0B_0 L41 WCKA0B_0 | WCKA1B_0 C33 WCKA1B_0 BI 5
5 BI WCKA0_1 L39 WCKA0_1 | WCKA1_1 D30 WCKA1_1 BI 5
5 BI WCKA0B_1 L38 WCKA0B_1 | WCKA1B_1 E30 WCKA1B_1 BI 5
5 BI EDCA0_0 R41 EDCA0_0 | EDCA1_0 B38 EDCA1_0 BI 5
5 BI EDCA0_1 F42 EDCA0_1 | EDCA1_1 C29 EDCA1_1 BI 5
5 BI EDCA0_2 R39 EDCA0_2 | EDCA1_2 D35 EDCA1_2 BI 5
5 BI EDCA0_3 H38 EDCA0_3 | EDCA1_3 G27 EDCA1_3 BI 5
5 BI DDBIA0_0 P43 DDBIA0_0 | DDBIA1_0 D36 DDBIA1_0 BI 5
5 BI DDBIA0_1 H40 DDBIA0_1 | DDBIA1_1 A30 DDBIA1_1 BI 5
5 BI DDBIA0_2 P40 DDBIA0_2 | DDBIA1_2 E35 DDBIA1_2 BI 5
5 BI DDBIA0_3 F39 DDBIA0_3 | DDBIA1_3 H29 DDBIA1_3 BI 5
5 BI ADBIA0 P36 ADBIA0 | ADBIA1 J36 ADBIA1 BI 5
5 OUT CSA0B_0 Y34 CSA0B_0 | CSA1B_0 M27 CSA1B_0 OUT 5
5 OUT CASA0B R32 CASA0B | CASA1B L35 CASA1B OUT 5
5 OUT RASA0B P33 RASA0B | RASA1B M35 RASA1B OUT 5
5 OUT WEA0B V34 WEA0B | WEA1B H30 WEA1B OUT 5
5 OUT CKEA0 P34 CKEA0 | CKEA1 M34 CKEA1 OUT 5
5 OUT CLKA0 W32 CLKA0 | CLKA1 M29 CLKA1 OUT 5
5 OUT CLKA0B W33 CLKA0B | CLKA1B L29 CLKA1B OUT 5
120R 2 1 R3610 1% MEM_CALRA Y31 MEM_CALRA
MVREFDA P25 MVREF_A
+MVDD
R3602 40.2R 1%
C3602 1uF 6.3V
R3606 100R 1%
1 2
21 OUT DRAM_RSTA W30 DRAM_RSTA
REV 0.90
ellesmere_l4
MVREFD/S = 0.7 * VDDR1
5

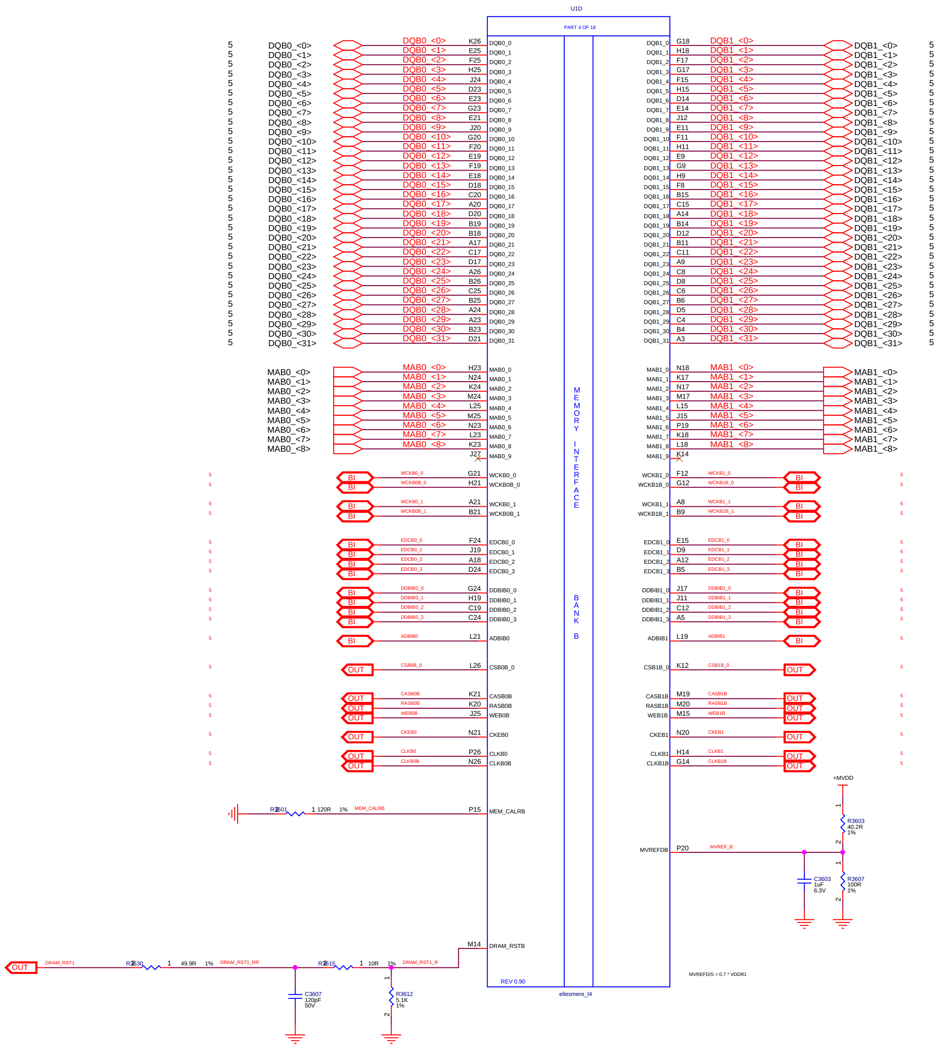
U1D
PART 4 OF 18
MEMORY INTERFACE BANK B
5 DQB0_<0> DQB0_<0> K26 DQB0_0 | DQB1_0 G18 DQB1_<0> DQB1_<0> 5
5 DQB0_<1> DQB0_<1> E25 DQB0_1 | DQB1_1 H18 DQB1_<1> DQB1_<1> 5
5 DQB0_<2> DQB0_<2> F25 DQB0_2 | DQB1_2 F17 DQB1_<2> DQB1_<2> 5
5 DQB0_<3> DQB0_<3> H25 DQB0_3 | DQB1_3 G17 DQB1_<3> DQB1_<3> 5
5 DQB0_<4> DQB0_<4> J24 DQB0_4 | DQB1_4 F15 DQB1_<4> DQB1_<4> 5
5 DQB0_<5> DQB0_<5> D23 DQB0_5 | DQB1_5 H15 DQB1_<5> DQB1_<5> 5
5 DQB0_<6> DQB0_<6> E23 DQB0_6 | DQB1_6 D14 DQB1_<6> DQB1_<6> 5
5 DQB0_<7> DQB0_<7> G23 DQB0_7 | DQB1_7 E14 DQB1_<7> DQB1_<7> 5
5 DQB0_<8> DQB0_<8> E21 DQB0_8 | DQB1_8 J12 DQB1_<8> DQB1_<8> 5
5 DQB0_<9> DQB0_<9> J20 DQB0_9 | DQB1_9 E11 DQB1_<9> DQB1_<9> 5
5 DQB0_<10> DQB0_<10> G20 DQB0_10 | DQB1_10 F11 DQB1_<10> DQB1_<10> 5
5 DQB0_<11> DQB0_<11> F20 DQB0_11 | DQB1_11 H11 DQB1_<11> DQB1_<11> 5
5 DQB0_<12> DQB0_<12> E19 DQB0_12 | DQB1_12 E9 DQB1_<12> DQB1_<12> 5
5 DQB0_<13> DQB0_<13> F19 DQB0_13 | DQB1_13 G9 DQB1_<13> DQB1_<13> 5
5 DQB0_<14> DQB0_<14> E18 DQB0_14 | DQB1_14 H9 DQB1_<14> DQB1_<14> 5
5 DQB0_<15> DQB0_<15> D18 DQB0_15 | DQB1_15 F8 DQB1_<15> DQB1_<15> 5
5 DQB0_<16> DQB0_<16> C20 DQB0_16 | DQB1_16 B15 DQB1_<16> DQB1_<16> 5
5 DQB0_<17> DQB0_<17> A20 DQB0_17 | DQB1_17 C15 DQB1_<17> DQB1_<17> 5
5 DQB0_<18> DQB0_<18> D20 DQB0_18 | DQB1_18 A14 DQB1_<18> DQB1_<18> 5
5 DQB0_<19> DQB0_<19> B19 DQB0_19 | DQB1_19 B14 DQB1_<19> DQB1_<19> 5
5 DQB0_<20> DQB0_<20> B18 DQB0_20 | DQB1_20 D12 DQB1_<20> DQB1_<20> 5
5 DQB0_<21> DQB0_<21> A17 DQB0_21 | DQB1_21 B11 DQB1_<21> DQB1_<21> 5
5 DQB0_<22> DQB0_<22> C17 DQB0_22 | DQB1_22 C11 DQB1_<22> DQB1_<22> 5
5 DQB0_<23> DQB0_<23> D17 DQB0_23 | DQB1_23 A9 DQB1_<23> DQB1_<23> 5
5 DQB0_<24> DQB0_<24> A26 DQB0_24 | DQB1_24 C8 DQB1_<24> DQB1_<24> 5
5 DQB0_<25> DQB0_<25> B26 DQB0_25 | DQB1_25 D8 DQB1_<25> DQB1_<25> 5
5 DQB0_<26> DQB0_<26> C25 DQB0_26 | DQB1_26 C6 DQB1_<26> DQB1_<26> 5
5 DQB0_<27> DQB0_<27> B25 DQB0_27 | DQB1_27 B6 DQB1_<27> DQB1_<27> 5
5 DQB0_<28> DQB0_<28> A24 DQB0_28 | DQB1_28 D5 DQB1_<28> DQB1_<28> 5
5 DQB0_<29> DQB0_<29> A23 DQB0_29 | DQB1_29 C4 DQB1_<29> DQB1_<29> 5
5 DQB0_<30> DQB0_<30> B23 DQB0_30 | DQB1_30 B4 DQB1_<30> DQB1_<30> 5
5 DQB0_<31> DQB0_<31> D21 DQB0_31 | DQB1_31 A3 DQB1_<31> DQB1_<31> 5
MAB0_<0> MAB0_<0> H23 MAB0_0 | MAB1_0 N18 MAB1_<0> MAB1_<0>
MAB0_<1> MAB0_<1> N24 MAB0_1 | MAB1_1 K17 MAB1_<1> MAB1_<1>
MAB0_<2> MAB0_<2> K24 MAB0_2 | MAB1_2 N17 MAB1_<2> MAB1_<2>
MAB0_<3> MAB0_<3> M24 MAB0_3 | MAB1_3 M17 MAB1_<3> MAB1_<3>
MAB0_<4> MAB0_<4> L25 MAB0_4 | MAB1_4 L15 MAB1_<4> MAB1_<4>
MAB0_<5> MAB0_<5> M25 MAB0_5 | MAB1_5 J15 MAB1_<5> MAB1_<5>
MAB0_<6> MAB0_<6> N23 MAB0_6 | MAB1_6 P19 MAB1_<6> MAB1_<6>
MAB0_<7> MAB0_<7> L23 MAB0_7 | MAB1_7 K18 MAB1_<7> MAB1_<7>
MAB0_<8> MAB0_<8> K23 MAB0_8 | MAB1_8 L18 MAB1_<8> MAB1_<8>
J27 MAB0_9 | MAB1_9 K14
5 BI WCKB0_0 G21 WCKB0_0 | WCKB1_0 F12 WCKB1_0 BI 5
5 BI WCKB0B_0 H21 WCKB0B_0 | WCKB1B_0 G12 WCKB1B_0 BI 5
5 BI WCKB0_1 A21 WCKB0_1 | WCKB1_1 A8 WCKB1_1 BI 5
5 BI WCKB0B_1 B21 WCKB0B_1 | WCKB1B_1 B9 WCKB1B_1 BI 5
5 BI EDCB0_0 F24 EDCB0_0 | EDCB1_0 E15 EDCB1_0 BI 5
5 BI EDCB0_1 J19 EDCB0_1 | EDCB1_1 D9 EDCB1_1 BI 5
5 BI EDCB0_2 A18 EDCB0_2 | EDCB1_2 A12 EDCB1_2 BI 5
5 BI EDCB0_3 D24 EDCB0_3 | EDCB1_3 B5 EDCB1_3 BI 5
5 BI DDBIB0_0 G24 DDBIB0_0 | DDBIB1_0 J17 DDBIB1_0 BI 5
5 BI DDBIB0_1 H19 DDBIB0_1 | DDBIB1_1 J11 DDBIB1_1 BI 5
5 BI DDBIB0_2 C19 DDBIB0_2 | DDBIB1_2 C12 DDBIB1_2 BI 5
5 BI DDBIB0_3 C24 DDBIB0_3 | DDBIB1_3 A5 DDBIB1_3 BI 5
5 BI ADBIB0 L21 ADBIB0 | ADBIB1 L19 ADBIB1 BI 5
5 OUT CSB0B_0 L26 CSB0B_0 | CSB1B_0 K12 CSB1B_0 OUT 5
5 OUT CASB0B K21 CASB0B | CASB1B M19 CASB1B OUT 5
5 OUT RASB0B K20 RASB0B | RASB1B M20 RASB1B OUT 5
5 OUT WEB0B J25 WEB0B | WEB1B M15 WEB1B OUT 5
5 OUT CKEB0 N21 CKEB0 | CKEB1 N20 CKEB1 OUT 5
5 OUT CLKB0 P26 CLKB0 | CLKB1 H14 CLKB1 OUT 5
5 OUT CLKB0B N26 CLKB0B | CLKB1B G14 CLKB1B OUT 5
R3601 2 1 120R 1% MEM_CALRB P15 MEM_CALRB
MVREFDB P20 MVREF_B
+MVDD
R3603 40.2R 1%
C3603 1uF 6.3V
R3607 100R 1%
1 2
OUT DRAM_RST1 R3630 2 1 49.9R 1% DRAM_RST1_RR R3615 2 1 10R 1% DRAM_RST1_R M14 DRAM_RSTB
C3607 120pF 50V
R3612 5.1K 1%
REV 0.90
ellesmere_l4
MVREFD/S = 0.7 * VDDR1

MICRO-STAR INT'L CO.,LTD

MS-V341

Size	Document Description	Rev
Custom	TABLE OF CONTENTS	1.0

Date: Tuesday, August 09, 2016 | Sheet 3 of 26

(4) ELLESMERE MEM INTERFACE CH C/D

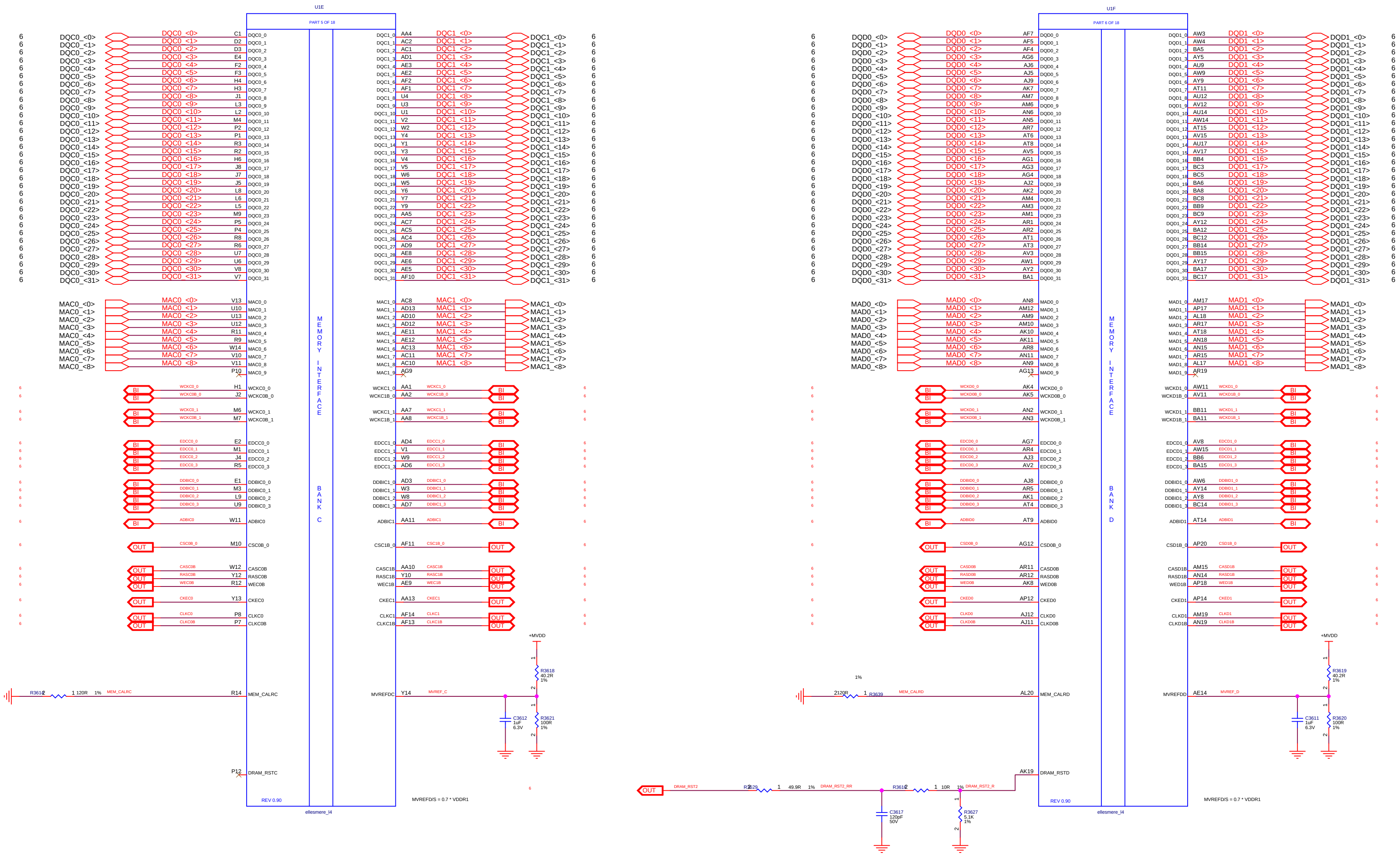
U1E
PART 5 OF 18
MEMORY INTERFACE
BANK C
DQC0_<0> C1 DQC0_0
DQC0_<1> D2 DQC0_1
DQC0_<2> D3 DQC0_2
DQC0_<3> E4 DQC0_3
DQC0_<4> F2 DQC0_4
DQC0_<5> F3 DQC0_5
DQC0_<6> H4 DQC0_6
DQC0_<7> H3 DQC0_7
DQC0_<8> J1 DQC0_8
DQC0_<9> L3 DQC0_9
DQC0_<10> L2 DQC0_10
DQC0_<11> M4 DQC0_11
DQC0_<12> P2 DQC0_12
DQC0_<13> P1 DQC0_13
DQC0_<14> R3 DQC0_14
DQC0_<15> R2 DQC0_15
DQC0_<16> H6 DQC0_16
DQC0_<17> J8 DQC0_17
DQC0_<18> J7 DQC0_18
DQC0_<19> J5 DQC0_19
DQC0_<20> L8 DQC0_20
DQC0_<21> L6 DQC0_21
DQC0_<22> L5 DQC0_22
DQC0_<23> M9 DQC0_23
DQC0_<24> P5 DQC0_24
DQC0_<25> P4 DQC0_25
DQC0_<26> R8 DQC0_26
DQC0_<27> R6 DQC0_27
DQC0_<28> U7 DQC0_28
DQC0_<29> U6 DQC0_29
DQC0_<30> V8 DQC0_30
DQC0_<31> V7 DQC0_31
DQC1_0 AA4 DQC1_<0>
DQC1_1 AC2 DQC1_<1>
DQC1_2 AC1 DQC1_<2>
DQC1_3 AD1 DQC1_<3>
DQC1_4 AE3 DQC1_<4>
DQC1_5 AE2 DQC1_<5>
DQC1_6 AF2 DQC1_<6>
DQC1_7 AF1 DQC1_<7>
DQC1_8 U4 DQC1_<8>
DQC1_9 U3 DQC1_<9>
DQC1_10 U1 DQC1_<10>
DQC1_11 V2 DQC1_<11>
DQC1_12 W2 DQC1_<12>
DQC1_13 Y4 DQC1_<13>
DQC1_14 Y1 DQC1_<14>
DQC1_15 Y3 DQC1_<15>
DQC1_16 V4 DQC1_<16>
DQC1_17 V5 DQC1_<17>
DQC1_18 W6 DQC1_<18>
DQC1_19 W5 DQC1_<19>
DQC1_20 Y6 DQC1_<20>
DQC1_21 Y7 DQC1_<21>
DQC1_22 Y9 DQC1_<22>
DQC1_23 AA5 DQC1_<23>
DQC1_24 AC7 DQC1_<24>
DQC1_25 AC5 DQC1_<25>
DQC1_26 AC4 DQC1_<26>
DQC1_27 AD9 DQC1_<27>
DQC1_28 AE8 DQC1_<28>
DQC1_29 AE6 DQC1_<29>
DQC1_30 AE5 DQC1_<30>
DQC1_31 AF10 DQC1_<31>
MAC0_<0> V13 MAC0_0
MAC0_<1> U10 MAC0_1
MAC0_<2> U13 MAC0_2
MAC0_<3> U12 MAC0_3
MAC0_<4> R11 MAC0_4
MAC0_<5> R9 MAC0_5
MAC0_<6> W14 MAC0_6
MAC0_<7> V10 MAC0_7
MAC0_<8> V11 MAC0_8
P10 MAC0_9
MAC1_0 AC8 MAC1_<0>
MAC1_1 AD13 MAC1_<1>
MAC1_2 AD10 MAC1_<2>
MAC1_3 AD12 MAC1_<3>
MAC1_4 AE11 MAC1_<4>
MAC1_5 AE12 MAC1_<5>
MAC1_6 AC13 MAC1_<6>
MAC1_7 AC11 MAC1_<7>
MAC1_8 AC10 MAC1_<8>
MAC1_9 AG9
BI WCKC0_0 H1 WCKC0_0
BI WCKC0B_0 J2 WCKC0B_0
BI WCKC0_1 M6 WCKC0_1
BI WCKC0B_1 M7 WCKC0B_1
BI EDCC0_0 E2 EDCC0_0
BI EDCC0_1 M1 EDCC0_1
BI EDCC0_2 J4 EDCC0_2
BI EDCC0_3 R5 EDCC0_3
BI DDBIC0_0 E1 DDBIC0_0
BI DDBIC0_1 M3 DDBIC0_1
BI DDBIC0_2 L9 DDBIC0_2
BI DDBIC0_3 U9 DDBIC0_3
BI ADBIC0 W11 ADBIC0
OUT CSC0B_0 M10 CSC0B_0
OUT CASC0B W12 CASC0B
OUT RASC0B Y12 RASC0B
OUT WEC0B R12 WEC0B
OUT CKEC0 Y13 CKEC0
OUT CLKC0 P8 CLKC0
OUT CLKC0B P7 CLKC0B
WCKC1_0 AA1 WCKC1_0 BI
WCKC1B_0 AA2 WCKC1B_0 BI
WCKC1_1 AA7 WCKC1_1 BI
WCKC1B_1 AA8 WCKC1B_1 BI
EDCC1_0 AD4 EDCC1_0 BI
EDCC1_1 V1 EDCC1_1 BI
EDCC1_2 W9 EDCC1_2 BI
EDCC1_3 AD6 EDCC1_3 BI
DDBIC1_0 AD3 DDBIC1_0 BI
DDBIC1_1 W3 DDBIC1_1 BI
DDBIC1_2 W8 DDBIC1_2 BI
DDBIC1_3 AD7 DDBIC1_3 BI
ADBIC1 AA11 ADBIC1 BI
CSC1B_0 AF11 CSC1B_0 OUT
CASC1B AA10 CASC1B OUT
RASC1B Y10 RASC1B OUT
WEC1B AE9 WEC1B OUT
CKEC1 AA13 CKEC1 OUT
CLKC1 AF14 CLKC1 OUT
CLKC1B AF13 CLKC1B OUT
R3614 2 1 120R 1% MEM_CALRC R14 MEM_CALRC
MVREFDC Y14 MVREF_C
+MVDD
R3618 40.2R 1%
C3612 1uF 6.3V
R3621 100R 1%
P12 DRAM_RSTC
REV 0.90
ellesmere_l4
MVREFD/S = 0.7 * VDDR1
U1F
PART 6 OF 18
MEMORY INTERFACE
BANK D
DQD0_<0> AF7 DQD0_0
DQD0_<1> AF5 DQD0_1
DQD0_<2> AF4 DQD0_2
DQD0_<3> AG6 DQD0_3
DQD0_<4> AJ6 DQD0_4
DQD0_<5> AJ5 DQD0_5
DQD0_<6> AJ9 DQD0_6
DQD0_<7> AK7 DQD0_7
DQD0_<8> AM7 DQD0_8
DQD0_<9> AM6 DQD0_9
DQD0_<10> AN6 DQD0_10
DQD0_<11> AN5 DQD0_11
DQD0_<12> AR7 DQD0_12
DQD0_<13> AT6 DQD0_13
DQD0_<14> AT8 DQD0_14
DQD0_<15> AV5 DQD0_15
DQD0_<16> AG1 DQD0_16
DQD0_<17> AG3 DQD0_17
DQD0_<18> AG4 DQD0_18
DQD0_<19> AJ2 DQD0_19
DQD0_<20> AK2 DQD0_20
DQD0_<21> AM4 DQD0_21
DQD0_<22> AM3 DQD0_22
DQD0_<23> AM1 DQD0_23
DQD0_<24> AR1 DQD0_24
DQD0_<25> AR2 DQD0_25
DQD0_<26> AT1 DQD0_26
DQD0_<27> AT3 DQD0_27
DQD0_<28> AV3 DQD0_28
DQD0_<29> AW1 DQD0_29
DQD0_<30> AY2 DQD0_30
DQD0_<31> BA1 DQD0_31
DQD1_0 AW3 DQD1_<0>
DQD1_1 AW4 DQD1_<1>
DQD1_2 BA5 DQD1_<2>
DQD1_3 AY5 DQD1_<3>
DQD1_4 AU9 DQD1_<4>
DQD1_5 AW9 DQD1_<5>
DQD1_6 AY9 DQD1_<6>
DQD1_7 AT11 DQD1_<7>
DQD1_8 AU12 DQD1_<8>
DQD1_9 AV12 DQD1_<9>
DQD1_10 AU14 DQD1_<10>
DQD1_11 AW14 DQD1_<11>
DQD1_12 AT15 DQD1_<12>
DQD1_13 AV15 DQD1_<13>
DQD1_14 AU17 DQD1_<14>
DQD1_15 AV17 DQD1_<15>
DQD1_16 BB4 DQD1_<16>
DQD1_17 BC3 DQD1_<17>
DQD1_18 BC5 DQD1_<18>
DQD1_19 BA6 DQD1_<19>
DQD1_20 BA8 DQD1_<20>
DQD1_21 BC8 DQD1_<21>
DQD1_22 BB9 DQD1_<22>
DQD1_23 BC9 DQD1_<23>
DQD1_24 AY12 DQD1_<24>
DQD1_25 BA12 DQD1_<25>
DQD1_26 BC12 DQD1_<26>
DQD1_27 BB14 DQD1_<27>
DQD1_28 BB15 DQD1_<28>
DQD1_29 AY17 DQD1_<29>
DQD1_30 BA17 DQD1_<30>
DQD1_31 BC17 DQD1_<31>
MAD0_<0> AN8 MAD0_0
MAD0_<1> AM12 MAD0_1
MAD0_<2> AM9 MAD0_2
MAD0_<3> AM10 MAD0_3
MAD0_<4> AK10 MAD0_4
MAD0_<5> AK11 MAD0_5
MAD0_<6> AR8 MAD0_6
MAD0_<7> AN11 MAD0_7
MAD0_<8> AN9 MAD0_8
AG13 MAD0_9
MAD1_0 AM17 MAD1_<0>
MAD1_1 AP17 MAD1_<1>
MAD1_2 AL18 MAD1_<2>
MAD1_3 AR17 MAD1_<3>
MAD1_4 AT18 MAD1_<4>
MAD1_5 AN18 MAD1_<5>
MAD1_6 AN15 MAD1_<6>
MAD1_7 AR15 MAD1_<7>
MAD1_8 AL17 MAD1_<8>
MAD1_9 AR19
BI WCKD0_0 AK4 WCKD0_0
BI WCKD0B_0 AK5 WCKD0B_0
BI WCKD0_1 AN2 WCKD0_1
BI WCKD0B_1 AN3 WCKD0B_1
BI EDCD0_0 AG7 EDCD0_0
BI EDCD0_1 AR4 EDCD0_1
BI EDCD0_2 AJ3 EDCD0_2
BI EDCD0_3 AV2 EDCD0_3
BI DDBID0_0 AJ8 DDBID0_0
BI DDBID0_1 AR5 DDBID0_1
BI DDBID0_2 AK1 DDBID0_2
BI DDBID0_3 AT4 DDBID0_3
BI ADBID0 AT9 ADBID0
OUT CSD0B_0 AG12 CSD0B_0
OUT CASD0B AR11 CASD0B
OUT RASD0B AR12 RASD0B
OUT WED0B AK8 WED0B
OUT CKED0 AP12 CKED0
OUT CLKD0 AJ12 CLKD0
OUT CLKD0B AJ11 CLKD0B
WCKD1_0 AW11 WCKD1_0 BI
WCKD1B_0 AV11 WCKD1B_0 BI
WCKD1_1 BB11 WCKD1_1 BI
WCKD1B_1 BA11 WCKD1B_1 BI
EDCD1_0 AV8 EDCD1_0 BI
EDCD1_1 AW15 EDCD1_1 BI
EDCD1_2 BB6 EDCD1_2 BI
EDCD1_3 BA15 EDCD1_3 BI
DDBID1_0 AW6 DDBID1_0 BI
DDBID1_1 AY14 DDBID1_1 BI
DDBID1_2 AY8 DDBID1_2 BI
DDBID1_3 BC14 DDBID1_3 BI
ADBID1 AT14 ADBID1 BI
CSD1B_0 AP20 CSD1B_0 OUT
CASD1B AM15 CASD1B OUT
RASD1B AN14 RASD1B OUT
WED1B AP18 WED1B OUT
CKED1 AP14 CKED1 OUT
CLKD1 AM19 CLKD1 OUT
CLKD1B AN19 CLKD1B OUT
1% 2 120R 1 R3639 MEM_CALRD AL20 MEM_CALRD
MVREFDD AE14 MVREF_D
+MVDD
R3619 40.2R 1%
C3611 1uF 6.3V
R3620 100R 1%
AK19 DRAM_RSTD
OUT DRAM_RST2 R3629 1 49.9R 1% DRAM_RST2_RR
R3612 2 1 10R 1% DRAM_RST2_R
C3617 120pF 50V
R3627 5.1K 1%
REV 0.90
ellesmere_l4
MVREFD/S = 0.7 * VDDR1
6

MICRO-STAR INT'L CO.,LTD

MS-V341

Size	Document Description	Rev
Custom	TABLE OF CONTENTS	1.0

Date: Tuesday, August 09, 2016 Sheet 4 of 26

(5) GDDR5 MEMORY CH A/B

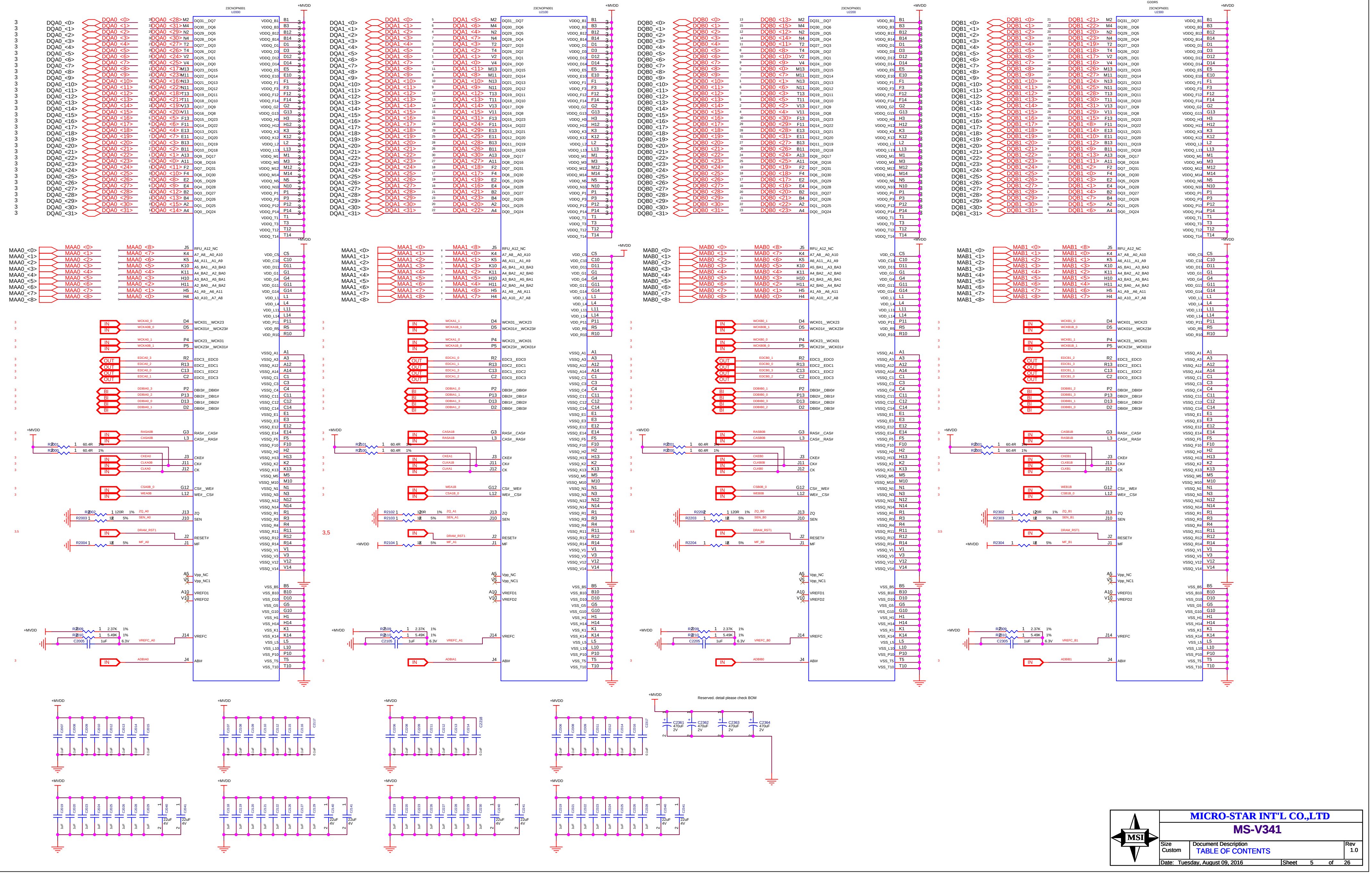
U2000
U2100
U2200
U2300
23CNOPN001
GDDR5
+MVDD
Reserved. detail please check BOM
C2361 470uF 2V
C2362 470uF 2V
C2363 470uF 2V
C2364 470uF 2V

MICRO-STAR INT'L CO.,LTD

MS-V341

Size	Document Description	Rev
Custom	TABLE OF CONTENTS	1.0

Date: Tuesday, August 09, 2016 Sheet 5 of 26

(6) GDDR5 MEMORY CH C/D

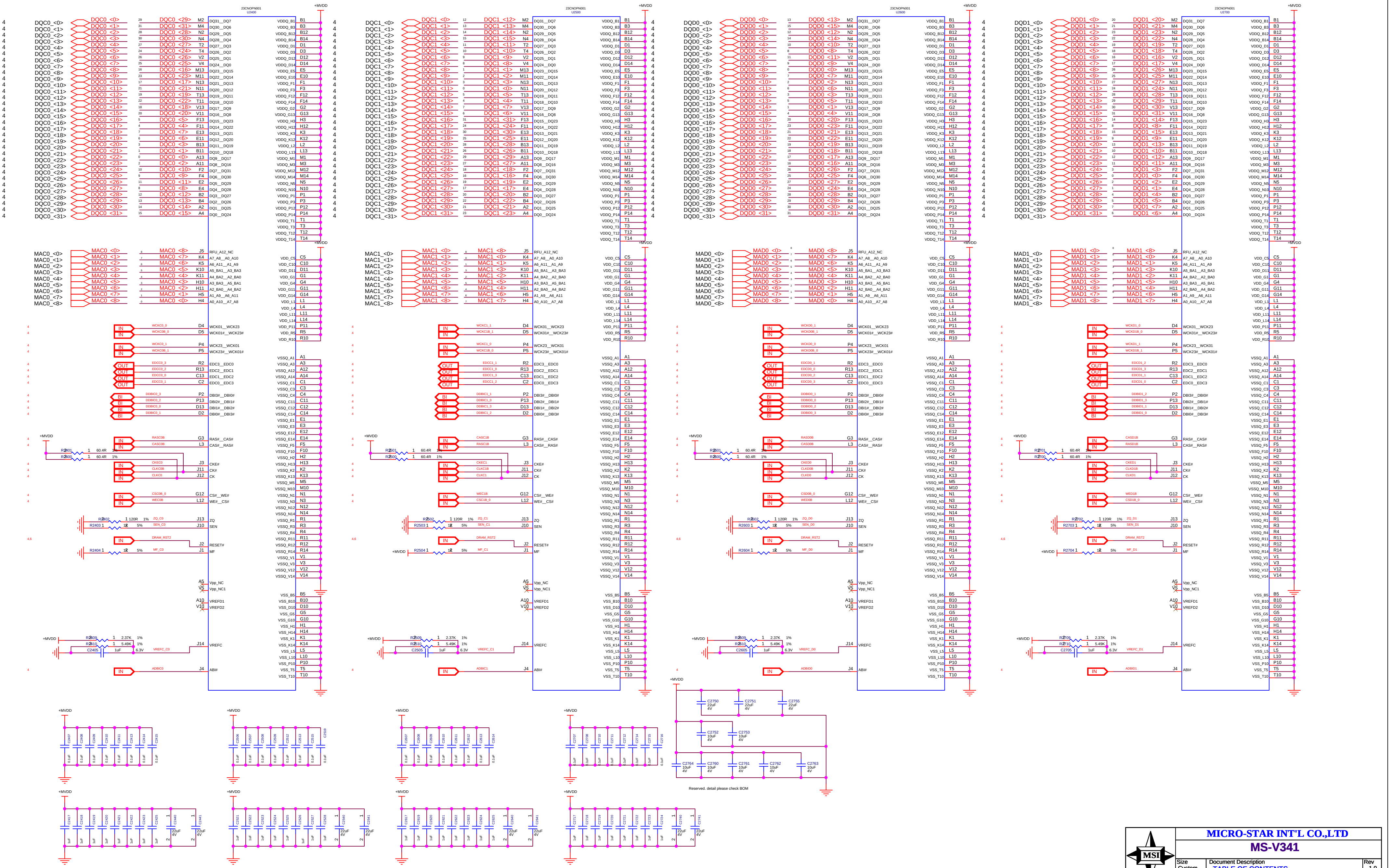
23CNOPN001
U2400
U2500
U2600
U2700
+MVDD
DQC0_<0> … DQC0_<31>
DQC1_<0> … DQC1_<31>
DQD0_<0> … DQD0_<31>
DQD1_<0> … DQD1_<31>
MAC0_<0> … MAC0_<8>
MAC1_<0> … MAC1_<8>
MAD0_<0> … MAD0_<8>
MAD1_<0> … MAD1_<8>
WCK01__WCK23
WCK01#__WCK23#
WCK23__WCK01
WCK23#__WCK01#
EDC3__EDC0
EDC2__EDC1
EDC1__EDC2
EDC0__EDC3
DBI3#__DBI0#
DBI2#__DBI1#
DBI1#__DBI2#
DBI0#__DBI3#
RAS#__CAS#
CAS#__RAS#
CKE#
CK#
CK
CS#__WE#
WE#__CS#
ZQ
SEN
RESET#
MF
Vpp_NC
Vpp_NC1
VREFD1
VREFD2
VREFC
ABI#
IN
OUT
BI
120R
60.4R
2.37K
5.49K
1uF
6.3V
0.1uF
22uF
10uF
4V
C2750
C2751
C2755
C2752
C2753
C2764
C2760
C2761
C2762
C2763
Reserved. detail please check BOM

MSI	MICRO-STAR INT'L CO.,LTD	
	MS-V341	
Size Custom	Document Description TABLE OF CONTENTS	Rev 1.0
Date: Tuesday, August 09, 2016	Sheet 6 of 26	

(7) ELLESMERE GPIO STRAP CF XTAL

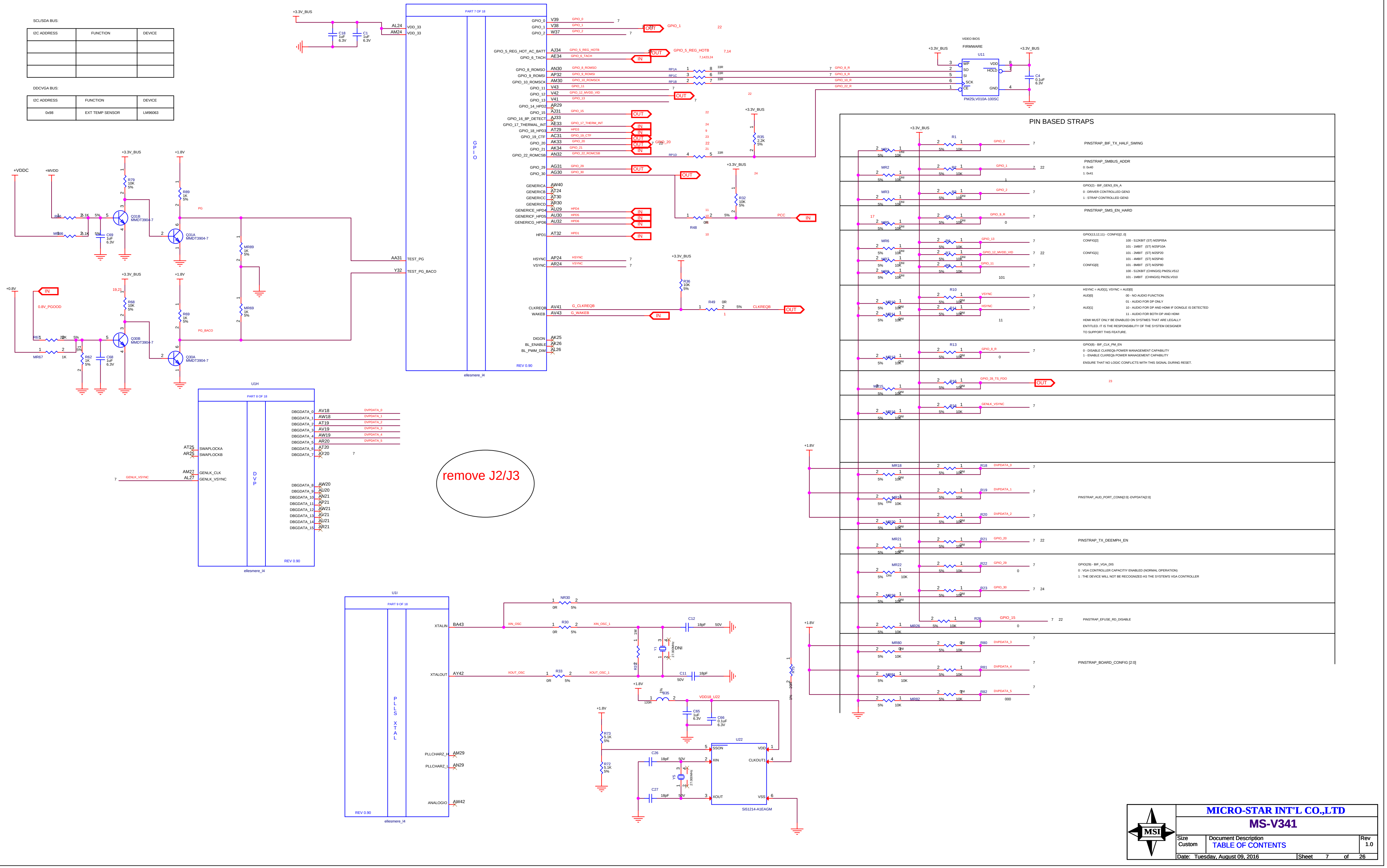

U1G
PART 7 OF 18
GPIO
+3.3V_BUS
C18 1uF 6.3V
C1 1uF 6.3V
AL24 VDD_33
AM24 VDD_33
GPIO_0 V39
GPIO_1 V38
GPIO_2 W37
GPIO_5_REG_HOT_AC_BATT AJ34
GPIO_6_TACH AE34
GPIO_8_ROMSO AN30
GPIO_9_ROMSI AP32
GPIO_10_ROMSCK AM30
GPIO_11 V43
GPIO_12 V42
GPIO_13 V41
GPIO_14_HPD2 AR29
GPIO_15 AJ31
GPIO_16_8P_DETECT AJ33
GPIO_17_THERMAL_INT AE33
GPIO_18_HPD3 AT29
GPIO_19_CTF AC31
GPIO_20 AK33
GPIO_21 AK34
GPIO_22_ROMCSB AN32
GPIO_29 AG31
GPIO_30 AG30
GENERICA AW40
GENERICB AT24
GENERICC AT30
GENERICD AR30
GENERICE_HPD4 AU29
GENERICF_HPD5 AU30
GENERICG_HPD6 AU32
HPD1 AT32
HSYNC AP24
VSYNC AR24
CLKREQB AV41
WAKEB AV43
DIGON AK25
BL_ENABLE AK26
BL_PWM_DIM AL26
AA31 TEST_PG
Y32 TEST_PG_BACO
REV 0.90
ellesmere_l4
OUT
IN
GPIO_1
GPIO_5_REG_HOTB
PCC
G_CLKREQB
G_WAKEB
CLKREQB
R49 0R 5%
R36 10K 5%
R35 2.2K 5%
R32 10K 5%
R48 0R
RP1A RP1C RP1B RP1D 33R
VIDEO BIOS
FIRMWARE
U11
WP SO SI SCK CE VDD HOLD GND
PM25LV010A-100SC
C4 0.1uF 6.3V
+VDDC
+MVDD
+1.8V
+0.8V
0.8V_PGOOD
R79 10K 5%
R89 1K 5%
Q31B MMDT3904-7
Q31A MMDT3904-7
C69 1uF 6.3V
MR56
MR89 1K 5%
PG
R68 10K 5%
R69 1K 5%
Q30B MMDT3904-7
Q30A MMDT3904-7
R62 1K 5%
C68 1uF 6.3V
MR67 1K
MR69 1K 5%
PG_BACO
U1H
PART 8 OF 18
DVP
AT25 SWAPLOCKA
AR25 SWAPLOCKB
AM27 GENLK_CLK
AL27 GENLK_VSYNC
GENLK_VSYNC
DBGDATA_0 AV18
DBGDATA_1 AW18
DBGDATA_2 AT19
DBGDATA_3 AV19
DBGDATA_4 AW19
DBGDATA_5 AR20
DBGDATA_6 AT20
DBGDATA_7 AY20
DBGDATA_8 AW20
DBGDATA_9 AU20
DBGDATA_10 AN21
DBGDATA_11 AP21
DBGDATA_12 AW21
DBGDATA_13 AV21
DBGDATA_14 AU21
DBGDATA_15 AR21
DVPDATA_0
DVPDATA_1
DVPDATA_2
DVPDATA_3
DVPDATA_4
DVPDATA_5
REV 0.90
ellesmere_l4
remove J2/J3
U1I
PART 9 OF 18
PLLS XTAL
XTALIN BA43
XTALOUT AY42
PLLCHARZ_H AM29
PLLCHARZ_L AN29
ANALOGIO AW42
REV 0.90
ellesmere_l4
XIN_OSC
XOUT_OSC
NR30 0R 5%
R30 0R 5%
R33 0R 5%
XIN_OSC_1
XOUT_OSC_1
R12 1M
Y1 27.000MHz DNI
C12 18pF 50V
C11 18pF 50V
B35 120R
VDD18_U22
C65 1uF 6.3V
C66 0.1uF 6.3V
R73 5.1K 5%
R72 5.1K 5%
C26 18pF 50V
C27 18pF 50V
Y5 27.000MHz
U22
SSON XIN XOUT VDD CLKOUT1 VSS
Si51214-A1EAGM
PIN BASED STRAPS
PINSTRAP_BIF_TX_HALF_SWING
PINSTRAP_SMBUS_ADDR
0: 0x40
1: 0x41
GPIO(2) - BIF_GEN3_EN_A
0 : DRIVER CONTROLLED GEN3
1 : STRAP CONTROLLED GEN3
PINSTRAP_SMS_EN_HARD
GPIO(13,12,11) - CONFIG[2..0]
CONFIG[2] 100 - 512KBIT (ST) M25P05A
101 - 1MBIT (ST) M25P10A
CONFIG[1] 101 - 2MBIT (ST) M25P20
101 - 4MBIT (ST) M25P40
CONFIG[0] 101 - 8MBIT (ST) M25P80
100 - 512KBIT (CHINGIS) PM25LV512
101 - 1MBIT (CHINGIS) PM25LV010
HSYNC = AUD[1], VSYNC = AUD[0]
AUD[0] 00 - NO AUDIO FUNCTION
01 - AUDIO FOR DP ONLY
AUD[1] 10 - AUDIO FOR DP AND HDMI IF DONGLE IS DETECTED
11 - AUDIO FOR BOTH DP AND HDMI
HDMI MUST ONLY BE ENABLED ON SYSTMES THAT ARE LEGALLY
ENTITLED. IT IS THE RESPONSIBILITY OF THE SYSTEM DESIGNER
TO SUPPORT THIS FEATURE.
GPIO(8) - BIF_CLK_PM_EN
0 - DISABLE CLKREQB POWER MANAGEMENT CAPABILITY
1 - ENABLE CLKREQB POWER MANAGEMENT CAPABILITY
ENSURE THAT NO LOGIC CONFLICTS WITH THIS SIGNAL DURING RESET.
GPIO_26_TS_FDO
GENLK_VSYNC
PINSTRAP_AUD_PORT_CONN[2:0] -DVPDATA[2:0]
PINSTRAP_TX_DEEMPH_EN
GPIO(29) - BIF_VGA_DIS
0 : VGA CONTROLLER CAPACITY ENABLED (NORMAL OPERATION)
1 : THE DEVICE WILL NOT BE RECOGNIZED AS THE SYSTEM'S VGA CONTROLLER
PINSTRAP_EFUSE_RD_DISABLE
PINSTRAP_BOARD_CONFIG [2:0]
R1 10K 5%
MR1 10K DNI
R10 R13 R18 R19 R20 R21 R22 R23 R26 R80 R81 R82
MR2 MR3 MR6 MR18 MR21 MR22 MR26 MR80 MR82

SCL/SDA BUS:

I2C ADDRESS	FUNCTION	DEVICE

DDCVGA BUS:

I2C ADDRESS	FUNCTION	DEVICE
0x98	EXT TEMP SENSOR	LM96063

MICRO-STAR INT'L CO.,LTD

MS-V341

Size	Document Description	Rev
Custom	TABLE OF CONTENTS	1.0

Date: Tuesday, August 09, 2016 Sheet 7 of 26

(8) ELLESMERE DAC1 LOCK

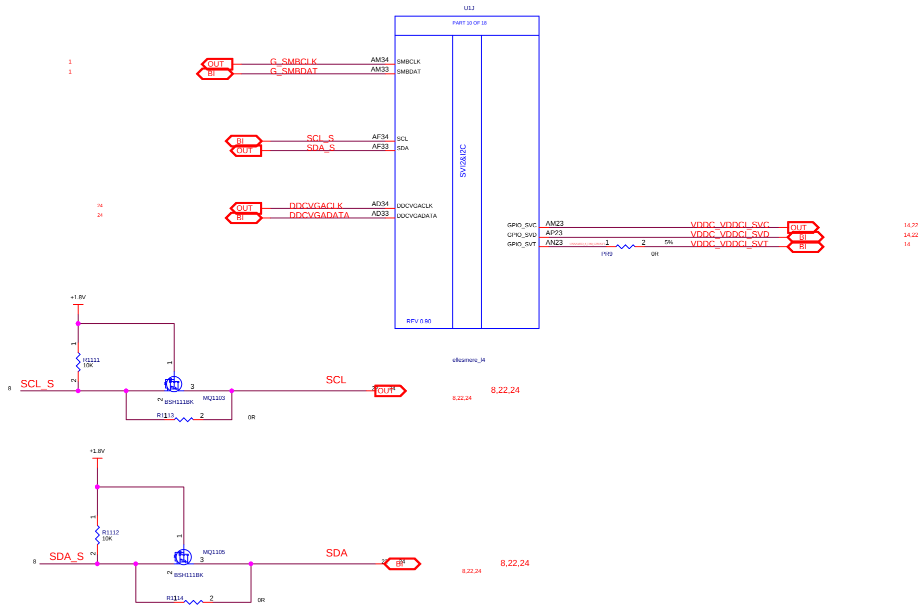
U1J
PART 10 OF 18
SVI2&I2C
REV 0.90
ellesmere_l4
1
1
OUT
BI
G_SMBCLK
G_SMBDAT
AM34
AM33
SMBCLK
SMBDAT
BI
OUT
SCL_S
SDA_S
AF34
AF33
SCL
SDA
24
24
OUT
BI
DDCVGACLK
DDCVGADATA
AD34
AD33
DDCVGACLK
DDCVGADATA
GPIO_SVC
GPIO_SVD
GPIO_SVT
AM23
AP23
AN23
1
2
5%
PR9
0R
VDDC_VDDCI_SVC
VDDC_VDDCI_SVD
VDDC_VDDCI_SVT
OUT
BI
BI
14,22
14,22
14
+1.8V
R1111
10K
8
SCL_S
BSH111BK
MQ1103
3
SCL
OUT
8,22,24
8,22,24
R1113
1
2
0R
+1.8V
R1112
10K
8
SDA_S
MQ1105
BSH111BK
3
SDA
BI
8,22,24
8,22,24
R1114
1
2
0R

MICRO-STAR INT'L CO.,LTD

MS-V341

Size	Document Description	Rev
Custom	TABLE OF CONTENTS	1.0

Date: Tuesday, August 09, 2016 Sheet 8 of 26

(9) ELLESMERE TMDP A/B

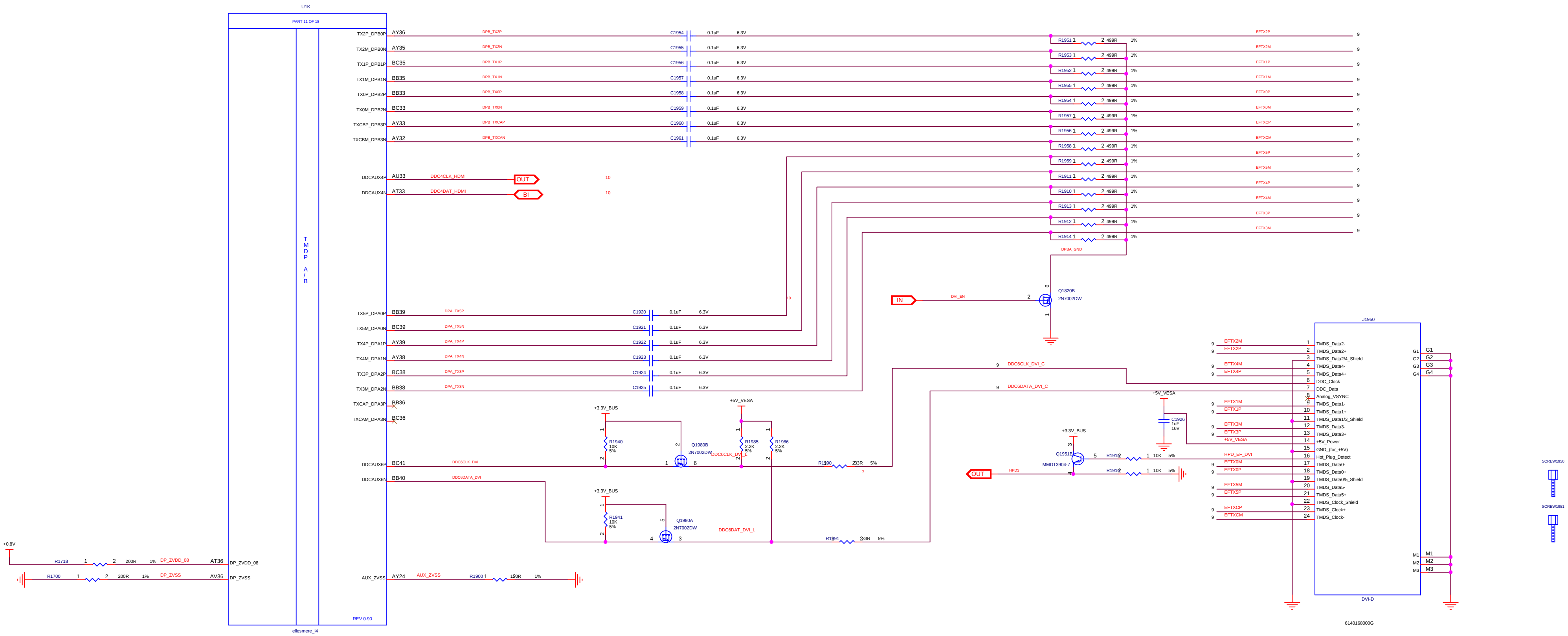
U1K
PART 11 OF 18
TMDP A/B
ellesmere_l4
REV 0.90
TX2P_DPB0P AY36 DPB_TX2P C1954 0.1uF 6.3V
TX2M_DPB0N AY35 DPB_TX2N C1955 0.1uF 6.3V
TX1P_DPB1P BC35 DPB_TX1P C1956 0.1uF 6.3V
TX1M_DPB1N BB35 DPB_TX1N C1957 0.1uF 6.3V
TX0P_DPB2P BB33 DPB_TX0P C1958 0.1uF 6.3V
TX0M_DPB2N BC33 DPB_TX0N C1959 0.1uF 6.3V
TXCBP_DPB3P AY33 DPB_TXCAP C1960 0.1uF 6.3V
TXCBM_DPB3N AY32 DPB_TXCAN C1961 0.1uF 6.3V
DDCAUX4P AU33 DDC4CLK_HDMI OUT 10
DDCAUX4N AT33 DDC4DAT_HDMI BI 10
TX5P_DPA0P BB39 DPA_TX5P C1920 0.1uF 6.3V
TX5M_DPA0N BC39 DPA_TX5N C1921 0.1uF 6.3V
TX4P_DPA1P AY39 DPA_TX4P C1922 0.1uF 6.3V
TX4M_DPA1N AY38 DPA_TX4N C1923 0.1uF 6.3V
TX3P_DPA2P BC38 DPA_TX3P C1924 0.1uF 6.3V
TX3M_DPA2N BB38 DPA_TX3N C1925 0.1uF 6.3V
TXCAP_DPA3P BB36
TXCAM_DPA3N BC36
DDCAUX6P BC41 DDC6CLK_DVI
DDCAUX6N BB40 DDC6DATA_DVI
+0.8V
R1718 200R 1% DP_ZVDD_08 AT36 DP_ZVDD_08
R1700 200R 1% DP_ZVSS AV36 DP_ZVSS
AUX_ZVSS AY24 AUX_ZVSS R1900 150R 1%
R1951 R1953 R1952 R1955 R1954 R1957 R1956 R1958 R1959 R1911 R1910 R1913 R1912 R1914 499R 1%
EFTX2P EFTX2M EFTX1P EFTX1M EFTX0P EFTX0M EFTXCP EFTXCM EFTX5P EFTX5M EFTX4P EFTX4M EFTX3P EFTX3M
DPBA_GND
DVI_EN IN
Q1820B 2N7002DW
+3.3V_BUS
R1940 10K 5%
R1941 10K 5%
Q1980B 2N7002DW
Q1980A 2N7002DW
+5V_VESA
R1985 2.2K 5%
R1986 2.2K 5%
DDC6CLK_DVI_L
DDC6DAT_DVI_L
R1990 33R 5%
R1991 33R 5%
DDC6CLK_DVI_C
DDC6DATA_DVI_C
C1926 1uF 16V
+3.3V_BUS
Q1951B MMDT3904-7
R1917 10K 5%
R1918 10K 5%
HPD3 OUT
HPD_EF_DVI
J1950
1 TMDS_Data2-
2 TMDS_Data2+
3 TMDS_Data2/4_Shield
4 TMDS_Data4-
5 TMDS_Data4+
6 DDC_Clock
7 DDC_Data
8 Analog_VSYNC
9 TMDS_Data1-
10 TMDS_Data1+
11 TMDS_Data1/3_Shield
12 TMDS_Data3-
13 TMDS_Data3+
14 +5V_Power
15 GND_(for_+5V)
16 Hot_Plug_Detect
17 TMDS_Data0-
18 TMDS_Data0+
19 TMDS_Data0/5_Shield
20 TMDS_Data5-
21 TMDS_Data5+
22 TMDS_Clock_Shield
23 TMDS_Clock+
24 TMDS_Clock-
G1 G2 G3 G4
M1 M2 M3
DVI-D
6140168000G
SCREW1950
SCREW1951

OPTIONAL ESD PROTECTION DIODES

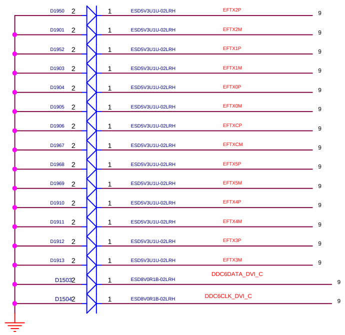
D1950 ESD5V3U1U-02LRH EFTX2P
D1901 ESD5V3U1U-02LRH EFTX2M
D1952 ESD5V3U1U-02LRH EFTX1P
D1903 ESD5V3U1U-02LRH EFTX1M
D1904 ESD5V3U1U-02LRH EFTX0P
D1905 ESD5V3U1U-02LRH EFTX0M
D1906 ESD5V3U1U-02LRH EFTXCP
D1967 ESD5V3U1U-02LRH EFTXCM
D1968 ESD5V3U1U-02LRH EFTX5P
D1969 ESD5V3U1U-02LRH EFTX5M
D1910 ESD5V3U1U-02LRH EFTX4P
D1911 ESD5V3U1U-02LRH EFTX4M
D1912 ESD5V3U1U-02LRH EFTX3P
D1913 ESD5V3U1U-02LRH EFTX3M
D1503 ESD8V0R1B-02LRH DDC6DATA_DVI_C
D1504 ESD8V0R1B-02LRH DDC6CLK_DVI_C

MICRO-STAR INT'L CO.,LTD

MS-V341

Size	Document Description	Rev
Custom	TABLE OF CONTENTS	1.0

Date: Tuesday, August 09, 2016 Sheet 9 of 26

(10) ELLESMERE TMDP C/D

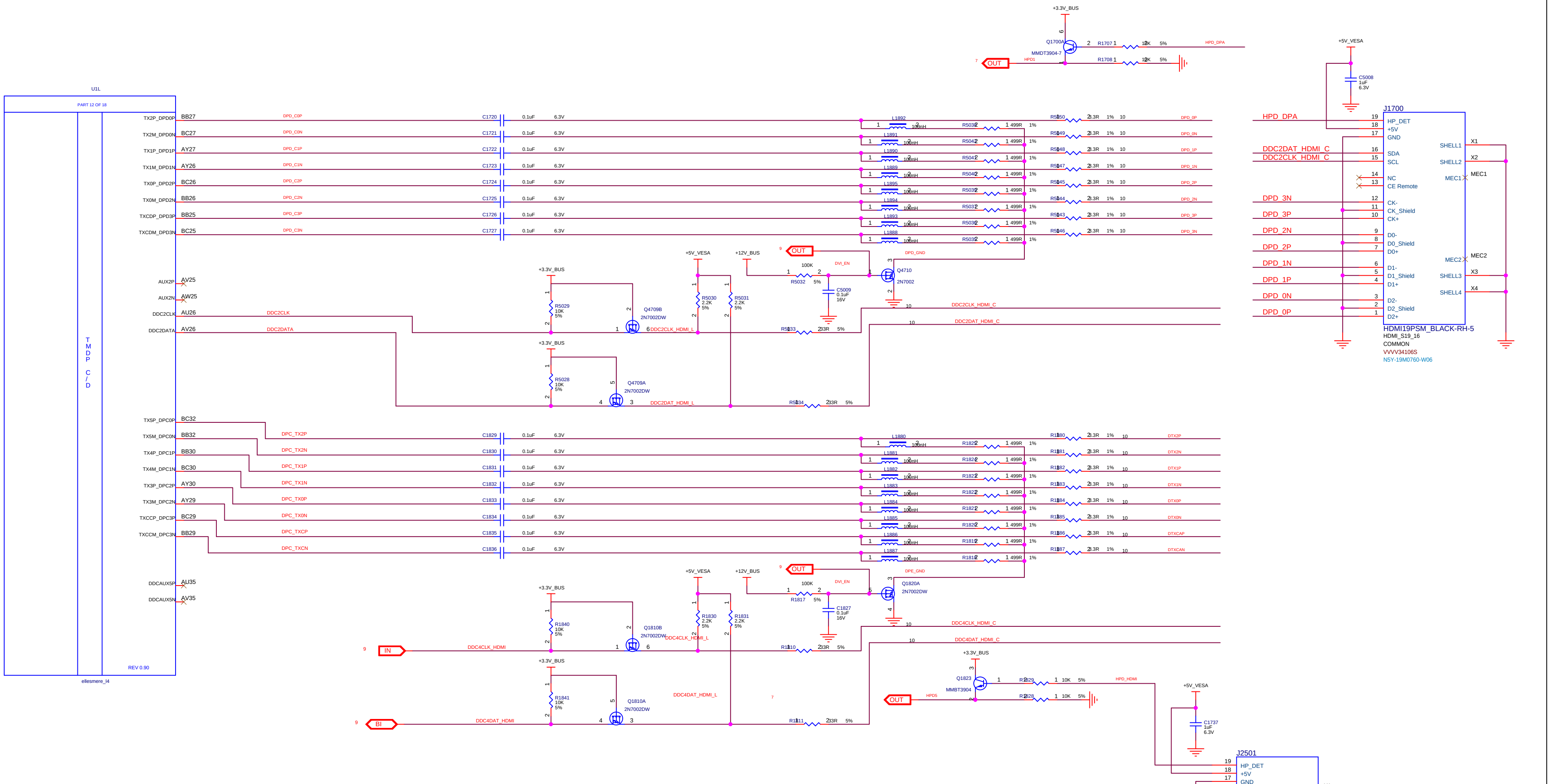
U1L
PART 12 OF 18
T M D P C / D
TX2P_DPD0P BB27
TX2M_DPD0N BC27
TX1P_DPD1P AY27
TX1M_DPD1N AY26
TX0P_DPD2P BC26
TX0M_DPD2N BB26
TXCDP_DPD3P BB25
TXCDM_DPD3N BC25
AUX2P AV25
AUX2N AW25
DDC2CLK AU26
DDC2DATA AV26
TX5P_DPC0P BC32
TX5M_DPC0N BB32
TX4P_DPC1P BB30
TX4M_DPC1N BC30
TX3P_DPC2P AY30
TX3M_DPC2N AY29
TXCCP_DPC3P BC29
TXCCM_DPC3N BB29
DDCAUX5P AU35
DDCAUX5N AV35
REV 0.90
ellesmere_l4
DPD_C0P
DPD_C0N
DPD_C1P
DPD_C1N
DPD_C2P
DPD_C2N
DPD_C3P
DPD_C3N
C1720 C1721 C1722 C1723 C1724 C1725 C1726 C1727
0.1uF 6.3V
L1892 L1891 L1890 L1889 L1895 L1894 L1893 L1888
100nH
R5039 R5042 R5041 R5040 R5038 R5037 R5036 R5035
499R 1%
R5050 R5049 R5048 R5047 R5045 R5044 R5043 R5046
33R 1%
DPD_0P
DPD_0N
DPD_1P
DPD_1N
DPD_2P
DPD_2N
DPD_3P
DPD_3N
DDC2CLK
DDC2DATA
+3.3V_BUS
R5029 10K 5%
R5028 10K 5%
Q4709B 2N7002DW
Q4709A 2N7002DW
DDC2CLK_HDMI_L
DDC2DAT_HDMI_L
+5V_VESA
+12V_BUS
R5030 2.2K 5%
R5031 2.2K 5%
OUT
DVI_EN
100K
R5032 5%
C5009 0.1uF 16V
Q4710 2N7002
DPD_GND
DDC2CLK_HDMI_C
DDC2DAT_HDMI_C
R5033 33R 5%
R5034 33R 5%
+3.3V_BUS
Q1700A MMDT3904-7
R1707 12K 5%
R1708 12K 5%
HPD_DPA
HPD1
OUT
+5V_VESA
C5008 1uF 6.3V
J1700
HPD_DPA
DDC2DAT_HDMI_C
DDC2CLK_HDMI_C
DPD_3N
DPD_3P
DPD_2N
DPD_2P
DPD_1N
DPD_1P
DPD_0N
DPD_0P
HP_DET
+5V
GND
SDA
SCL
NC
CE Remote
CK-
CK_Shield
CK+
D0-
D0_Shield
D0+
D1-
D1_Shield
D1+
D2-
D2_Shield
D2+
SHELL1 SHELL2 SHELL3 SHELL4
MEC1 MEC2
X1 X2 X3 X4
HDMI19PSM_BLACK-RH-5
HDMI_S19_16
COMMON
VVVV34106S
N5Y-19M0760-W06
DPC_TX2P
DPC_TX2N
DPC_TX1P
DPC_TX1N
DPC_TX0P
DPC_TX0N
DPC_TXCP
DPC_TXCN
C1829 C1830 C1831 C1832 C1833 C1834 C1835 C1836
L1880 L1881 L1882 L1883 L1884 L1885 L1886 L1887
R1820 R1821 R1822 R1823 R1824 R1825 R1826 R1819 R1818
R1880 R1881 R1882 R1883 R1884 R1885 R1886 R1887
DTX2P
DTX2N
DTX1P
DTX1N
DTX0P
DTX0N
DTXCAP
DTXCAN
R1840 10K 5%
R1841 10K 5%
Q1810B 2N7002DW
Q1810A 2N7002DW
DDC4CLK_HDMI_L
DDC4DAT_HDMI_L
R1830 2.2K 5%
R1831 2.2K 5%
R1817 5%
C1827 0.1uF 16V
Q1820A 2N7002DW
DPE_GND
DDC4CLK_HDMI_C
DDC4DAT_HDMI_C
IN
DDC4CLK_HDMI
BI
DDC4DAT_HDMI
R1810 33R 5%
R1811 33R 5%
Q1823 MMBT3904
R1829 10K 5%
R1828 10K 5%
HPD_HDMI
HPD5
OUT
+5V_VESA
C1737 1uF 6.3V

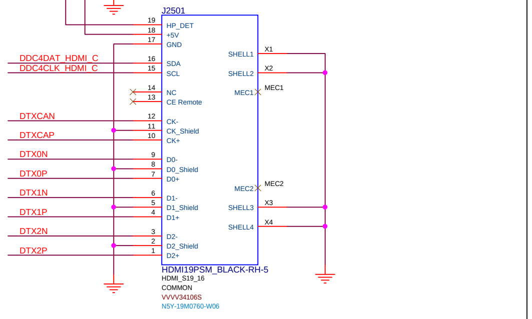
J2501
DDC4DAT_HDMI_C
DDC4CLK_HDMI_C
DTXCAN
DTXCAP
DTX0N
DTX0P
DTX1N
DTX1P
DTX2N
DTX2P
HP_DET
+5V
GND
SDA
SCL
NC
CE Remote
CK-
CK_Shield
CK+
D0-
D0_Shield
D0+
D1-
D1_Shield
D1+
D2-
D2_Shield
D2+
SHELL1 SHELL2 SHELL3 SHELL4
MEC1 MEC2
X1 X2 X3 X4
HDMI19PSM_BLACK-RH-5
HDMI_S19_16
COMMON
VVVV34106S
N5Y-19M0760-W06

OPTIONAL ESD PROTECTION DIODES

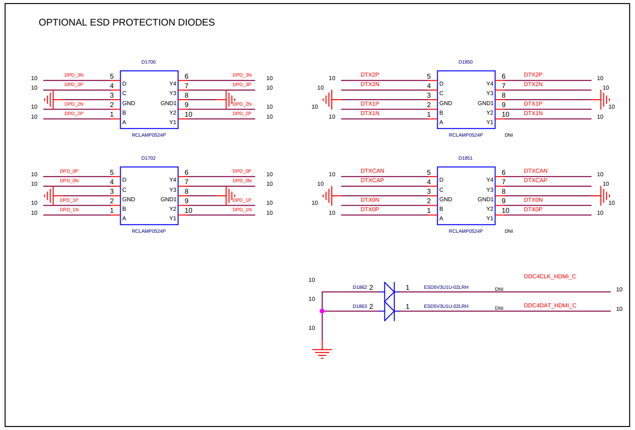
D1700
DPD_3N
DPD_3P
DPD_2N
DPD_2P
RCLAMP0524P
D1702
DPD_0P
DPD_0N
DPD_1P
DPD_1N
RCLAMP0524P
D1850
DTX2P
DTX2N
DTX1P
DTX1N
RCLAMP0524P
DNI
D1851
DTXCAN
DTXCAP
DTX0N
DTX0P
RCLAMP0524P
DNI
D C GND B A
Y4 Y3 GND1 Y2 Y1
D1862
D1863
ESD5V3U1U-02LRH
DNI
DDC4CLK_HDMI_C
DDC4DAT_HDMI_C

MICRO-STAR INT'L CO.,LTD
MS-V341
Size Custom
Document Description TABLE OF CONTENTS
Rev 1.0
Date: Tuesday, August 09, 2016
Sheet 10 of 26

(11) ELLESMERE LVTMDP E/F

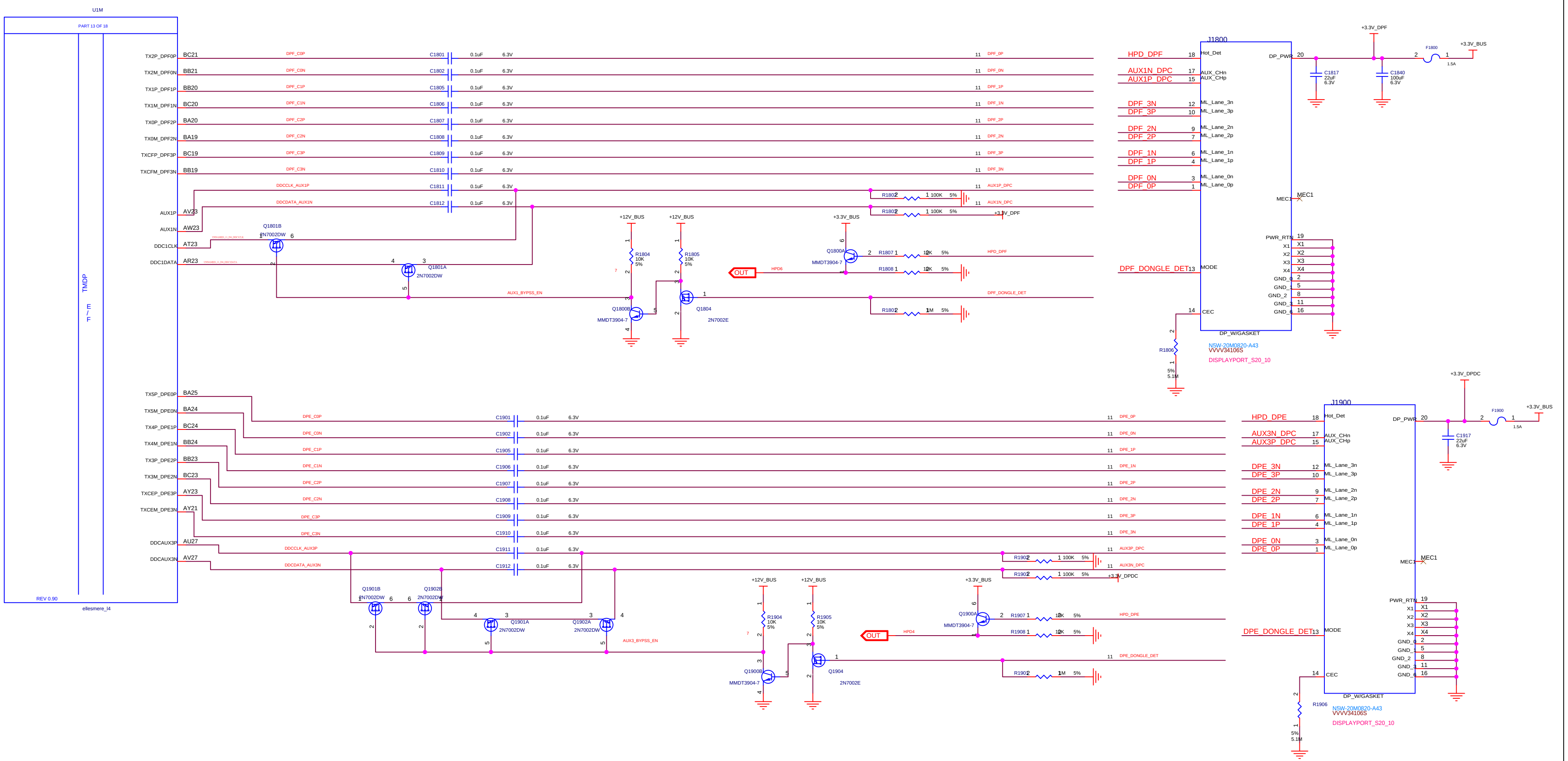
U1M
PART 13 OF 18
TMDP
E / F
REV 0.90
ellesmere_l4
TX2P_DPF0P BC21
TX2M_DPF0N BB21
TX1P_DPF1P BB20
TX1M_DPF1N BC20
TX0P_DPF2P BA20
TX0M_DPF2N BA19
TXCFP_DPF3P BC19
TXCFM_DPF3N BB19
AUX1P AV23
AUX1N AW23
DDC1CLK AT23
DDC1DATA AR23
TX5P_DPE0P BA25
TX5M_DPE0N BA24
TX4P_DPE1P BC24
TX4M_DPE1N BB24
TX3P_DPE2P BB23
TX3M_DPE2N BC23
TXCEP_DPE3P AY23
TXCEM_DPE3N AY21
DDCAUX3P AU27
DDCAUX3N AV27
C1801 C1802 C1805 C1806 C1807 C1808 C1809 C1810 C1811 C1812 0.1uF 6.3V
C1901 C1902 C1905 C1906 C1907 C1908 C1909 C1910 C1911 C1912 0.1uF 6.3V
DPF_C0P DPF_C0N DPF_C1P DPF_C1N DPF_C2P DPF_C2N DPF_C3P DPF_C3N
DDCCLK_AUX1P DDCDATA_AUX1N
DPE_C0P DPE_C0N DPE_C1P DPE_C1N DPE_C2P DPE_C2N DPE_C3P DPE_C3N
DDCCLK_AUX3P DDCDATA_AUX3N
Q1801B 2N7002DW
Q1801A 2N7002DW
Q1800B MMDT3904-7
Q1800A MMDT3904-7
Q1804 2N7002E
Q1901B 2N7002DW
Q1902B 2N7002DW
Q1901A 2N7002DW
Q1902A 2N7002DW
Q1900B MMDT3904-7
Q1900A MMDT3904-7
Q1904 2N7002E
+12V_BUS
+3.3V_BUS
+3.3V_DPF
+3.3V_DPDC
R1804 10K 5%
R1805 10K 5%
R1802 100K 5%
R1803 100K 5%
R1807 1 2 1K 5%
R1808 1 2 1K 5%
R1809 1M 5%
R1806 5% 5.1M
R1904 10K 5%
R1905 10K 5%
R1902 100K 5%
R1903 100K 5%
R1907 1K 5%
R1908 1K 5%
R1909 1M 5%
R1906 5% 5.1M
AUX1_BYPSS_EN
AUX3_BYPSS_EN
HPD6
HPD4
OUT
HPD_DPF
HPD_DPE
DPF_DONGLE_DET
DPE_DONGLE_DET
AUX1P_DPC AUX1N_DPC
AUX3P_DPC AUX3N_DPC
J1800
J1900
HPD_DPF 18 Hot_Det
AUX1N_DPC 17 AUX_CHn
AUX1P_DPC 15 AUX_CHp
DPF_3N 12 ML_Lane_3n
DPF_3P 10 ML_Lane_3p
DPF_2N 9 ML_Lane_2n
DPF_2P 7 ML_Lane_2p
DPF_1N 6 ML_Lane_1n
DPF_1P 4 ML_Lane_1p
DPF_0N 3 ML_Lane_0n
DPF_0P 1 ML_Lane_0p
DPF_DONGLE_DET 13 MODE
14 CEC
DP_PWR 20
MEC1
PWR_RTN 19
X1 X2 X3 X4
GND_0 2
GND_1 5
GND_2 8
GND_3 11
GND_4 16
DP_W/GASKET
NSW-20M0820-A43
VVVV34106S
DISPLAYPORT_S20_10
HPD_DPE 18 Hot_Det
AUX3N_DPC 17 AUX_CHn
AUX3P_DPC 15 AUX_CHp
DPE_3N 12
DPE_3P 10
DPE_2N 9
DPE_2P 7
DPE_1N 6
DPE_1P 4
DPE_0N 3
DPE_0P 1
DPE_DONGLE_DET 13 MODE
F1800 1.5A
F1900 1.5A
C1817 22uF 6.3V
C1840 100uF 6.3V
C1917 22uF 6.3V
11

OPTIONAL ESD PROTECTION DIODES

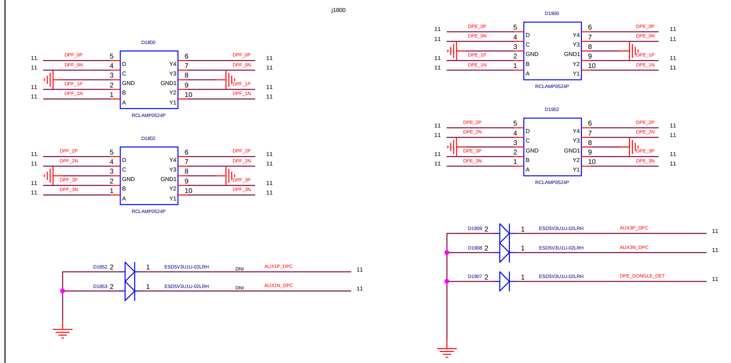
j1800
D1800 RCLAMP0524P
D1802 RCLAMP0524P
D1900 RCLAMP0524P
D1902 RCLAMP0524P
DPF_0P DPF_0N DPF_1P DPF_1N
DPF_2P DPF_2N DPF_3P DPF_3N
DPE_0P DPE_0N DPE_1P DPE_1N
DPE_2P DPE_2N DPE_3P DPE_3N
D C GND B A Y4 Y3 GND1 Y2 Y1
D1852 ESD5V3U1U-02LRH DNI AUX1P_DPC
D1853 ESD5V3U1U-02LRH DNI AUX1N_DPC
D1909 ESD5V3U1U-02LRH AUX3P_DPC
D1908 ESD5V3U1U-02LRH AUX3N_DPC
D1907 ESD5V3U1U-02LRH DPE_DONGLE_DET
11

MICRO-STAR INT'L CO.,LTD

MS-V341

Size	Document Description	Rev
Custom	TABLE OF CONTENTS	1.0

Date: Tuesday, August 09, 2016 Sheet 11 of 26

(12) ELLESMERE POWER

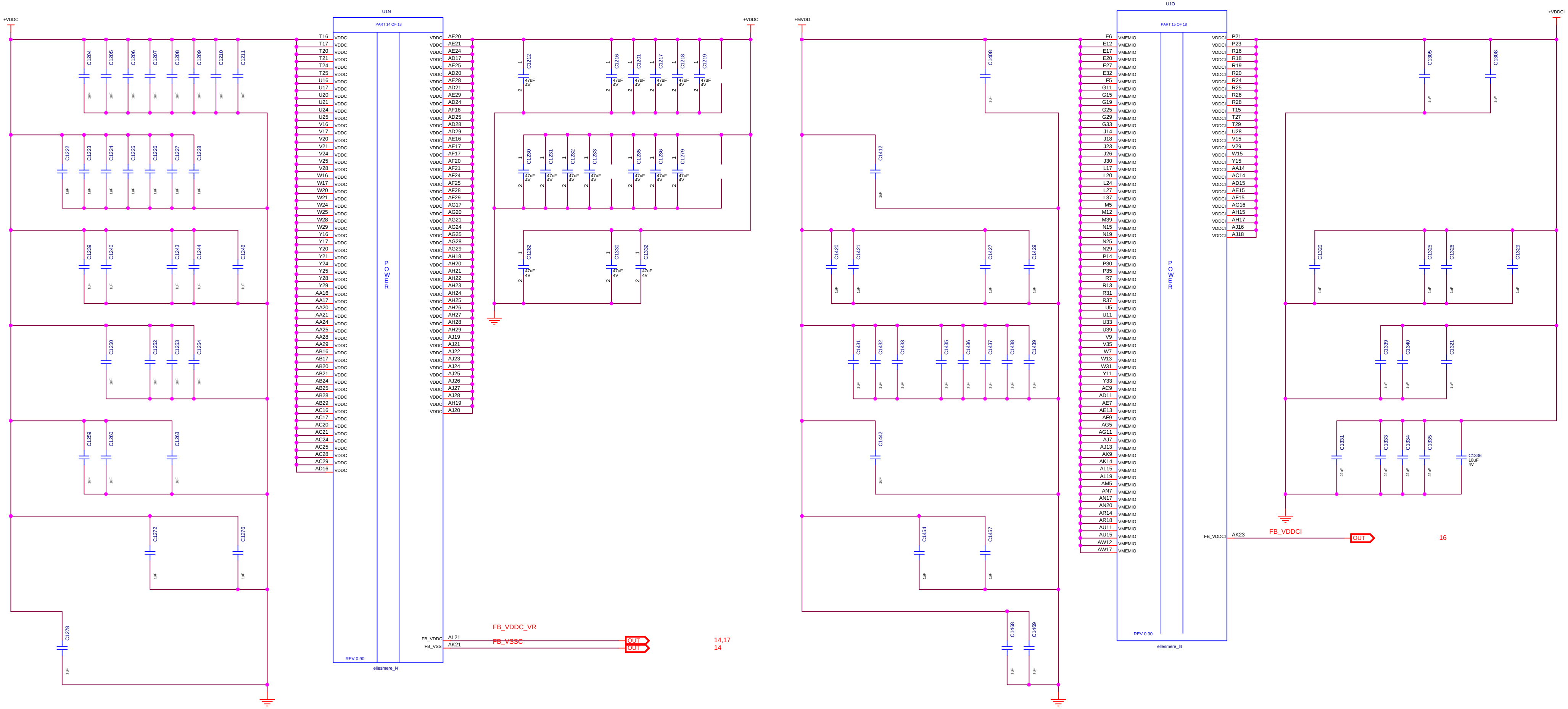

+VDDC
U1N
PART 14 OF 18
POWER
REV 0.90
ellesmere_l4
FB_VDDC
FB_VSS
AL21
AK21
FB_VDDC_VR
FB_VSSC
OUT
OUT
14,17
14
+MVDD
U1O
PART 15 OF 18
VMEMIO
VDDCI
REV 0.90
ellesmere_l4
+VDDCI
FB_VDDCI
AK23
FB_VDDCI
OUT
16
C1204
C1205
C1206
C1207
C1208
C1209
C1210
C1211
C1222
C1223
C1224
C1225
C1226
C1227
C1228
C1239
C1240
C1243
C1244
C1246
C1250
C1252
C1253
C1254
C1259
C1260
C1263
C1272
C1276
C1278
C1212
C1216
C1201
C1217
C1218
C1219
C1230
C1231
C1232
C1233
C1235
C1236
C1279
C1282
C1330
C1332
47uF
4V
1uF
C1408
C1412
C1420
C1421
C1427
C1429
C1431
C1432
C1433
C1435
C1436
C1437
C1438
C1439
C1442
C1454
C1457
C1468
C1469
C1305
C1308
C1320
C1325
C1326
C1329
C1339
C1340
C1321
C1331
C1333
C1334
C1335
C1336
10uF
4V
22uF

MICRO-STAR INT'L CO.,LTD

MS-V341

Size	Document Description	Rev
Custom	TABLE OF CONTENTS	1.0

Date: Tuesday, August 09, 2016 Sheet 12 of 26

(13) ELLESMERE GROUND

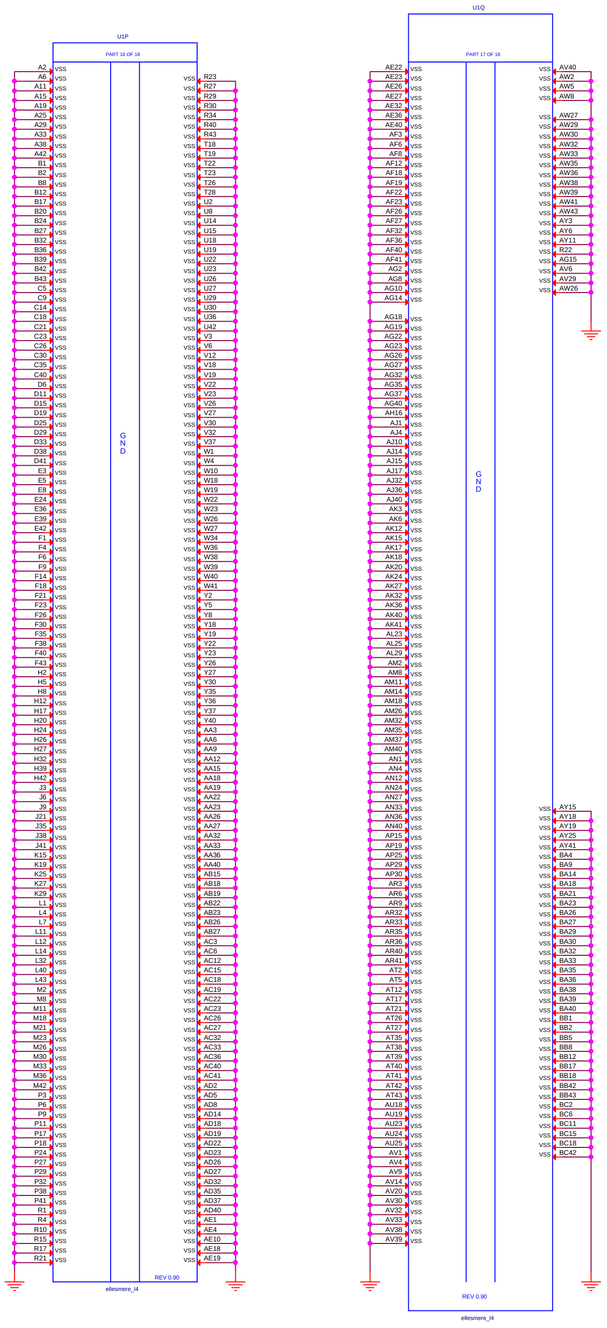
U1P
PART 16 OF 18
GND
A2 VSS
A6 VSS
A11 VSS
A15 VSS
A19 VSS
A25 VSS
A29 VSS
A33 VSS
A38 VSS
A42 VSS
B1 VSS
B2 VSS
B8 VSS
B12 VSS
B17 VSS
B20 VSS
B24 VSS
B27 VSS
B32 VSS
B36 VSS
B39 VSS
B42 VSS
B43 VSS
C5 VSS
C9 VSS
C14 VSS
C18 VSS
C21 VSS
C23 VSS
C26 VSS
C30 VSS
C35 VSS
C40 VSS
D6 VSS
D11 VSS
D15 VSS
D19 VSS
D25 VSS
D29 VSS
D33 VSS
D38 VSS
D41 VSS
E3 VSS
E5 VSS
E8 VSS
E24 VSS
E36 VSS
E39 VSS
E42 VSS
F1 VSS
F4 VSS
F6 VSS
F9 VSS
F14 VSS
F18 VSS
F21 VSS
F23 VSS
F26 VSS
F30 VSS
F35 VSS
F38 VSS
F40 VSS
F43 VSS
H2 VSS
H5 VSS
H8 VSS
H12 VSS
H17 VSS
H20 VSS
H24 VSS
H26 VSS
H27 VSS
H32 VSS
H39 VSS
H42 VSS
J3 VSS
J6 VSS
J9 VSS
J21 VSS
J35 VSS
J38 VSS
J41 VSS
K15 VSS
K19 VSS
K25 VSS
K27 VSS
K29 VSS
L1 VSS
L4 VSS
L7 VSS
L11 VSS
L12 VSS
L14 VSS
L32 VSS
L40 VSS
L43 VSS
M2 VSS
M8 VSS
M11 VSS
M18 VSS
M21 VSS
M23 VSS
M26 VSS
M30 VSS
M33 VSS
M36 VSS
M42 VSS
P3 VSS
P6 VSS
P9 VSS
P11 VSS
P17 VSS
P18 VSS
P24 VSS
P27 VSS
P29 VSS
P32 VSS
P38 VSS
P41 VSS
R1 VSS
R4 VSS
R10 VSS
R15 VSS
R17 VSS
R21 VSS
VSS R23
VSS R27
VSS R29
VSS R30
VSS R34
VSS R40
VSS R43
VSS T18
VSS T19
VSS T22
VSS T23
VSS T26
VSS T28
VSS U2
VSS U8
VSS U14
VSS U15
VSS U18
VSS U19
VSS U22
VSS U23
VSS U26
VSS U27
VSS U29
VSS U30
VSS U36
VSS U42
VSS V3
VSS V6
VSS V12
VSS V18
VSS V19
VSS V22
VSS V23
VSS V26
VSS V27
VSS V30
VSS V32
VSS V37
VSS W1
VSS W4
VSS W10
VSS W18
VSS W19
VSS W22
VSS W23
VSS W26
VSS W27
VSS W34
VSS W36
VSS W38
VSS W39
VSS W40
VSS W41
VSS Y2
VSS Y5
VSS Y8
VSS Y18
VSS Y19
VSS Y22
VSS Y23
VSS Y26
VSS Y27
VSS Y30
VSS Y35
VSS Y36
VSS Y37
VSS Y40
VSS AA3
VSS AA6
VSS AA9
VSS AA12
VSS AA15
VSS AA18
VSS AA19
VSS AA22
VSS AA23
VSS AA26
VSS AA27
VSS AA32
VSS AA33
VSS AA36
VSS AA40
VSS AB15
VSS AB18
VSS AB19
VSS AB22
VSS AB23
VSS AB26
VSS AB27
VSS AC3
VSS AC6
VSS AC12
VSS AC15
VSS AC18
VSS AC19
VSS AC22
VSS AC23
VSS AC26
VSS AC27
VSS AC32
VSS AC33
VSS AC36
VSS AC40
VSS AC41
VSS AD2
VSS AD5
VSS AD8
VSS AD14
VSS AD18
VSS AD19
VSS AD22
VSS AD23
VSS AD26
VSS AD27
VSS AD32
VSS AD35
VSS AD37
VSS AD40
VSS AE1
VSS AE4
VSS AE10
VSS AE18
VSS AE19
REV 0.90
ellesmere_l4
U1Q
PART 17 OF 18
GND
AE22 VSS
AE23 VSS
AE26 VSS
AE27 VSS
AE32 VSS
AE36 VSS
AE40 VSS
AF3 VSS
AF6 VSS
AF8 VSS
AF12 VSS
AF18 VSS
AF19 VSS
AF22 VSS
AF23 VSS
AF26 VSS
AF27 VSS
AF32 VSS
AF36 VSS
AF40 VSS
AF41 VSS
AG2 VSS
AG8 VSS
AG10 VSS
AG14 VSS
AG18 VSS
AG19 VSS
AG22 VSS
AG23 VSS
AG26 VSS
AG27 VSS
AG32 VSS
AG35 VSS
AG37 VSS
AG40 VSS
AH16 VSS
AJ1 VSS
AJ4 VSS
AJ10 VSS
AJ14 VSS
AJ15 VSS
AJ17 VSS
AJ32 VSS
AJ36 VSS
AJ40 VSS
AK3 VSS
AK6 VSS
AK12 VSS
AK15 VSS
AK17 VSS
AK18 VSS
AK20 VSS
AK24 VSS
AK27 VSS
AK32 VSS
AK36 VSS
AK40 VSS
AK41 VSS
AL23 VSS
AL25 VSS
AL29 VSS
AM2 VSS
AM8 VSS
AM11 VSS
AM14 VSS
AM18 VSS
AM26 VSS
AM32 VSS
AM35 VSS
AM37 VSS
AM40 VSS
AN1 VSS
AN4 VSS
AN12 VSS
AN24 VSS
AN27 VSS
AN33 VSS
AN36 VSS
AN40 VSS
AP15 VSS
AP19 VSS
AP25 VSS
AP29 VSS
AP30 VSS
AR3 VSS
AR6 VSS
AR9 VSS
AR32 VSS
AR33 VSS
AR35 VSS
AR36 VSS
AR40 VSS
AR41 VSS
AT2 VSS
AT5 VSS
AT12 VSS
AT17 VSS
AT21 VSS
AT26 VSS
AT27 VSS
AT35 VSS
AT38 VSS
AT39 VSS
AT40 VSS
AT41 VSS
AT42 VSS
AT43 VSS
AU18 VSS
AU19 VSS
AU23 VSS
AU24 VSS
AU25 VSS
AV1 VSS
AV4 VSS
AV9 VSS
AV14 VSS
AV20 VSS
AV30 VSS
AV32 VSS
AV33 VSS
AV38 VSS
AV39 VSS
VSS AV40
VSS AW2
VSS AW5
VSS AW8
VSS AW27
VSS AW29
VSS AW30
VSS AW32
VSS AW33
VSS AW35
VSS AW36
VSS AW38
VSS AW39
VSS AW41
VSS AW43
VSS AY3
VSS AY6
VSS AY11
VSS R22
VSS AG15
VSS AV6
VSS AV29
VSS AW26
VSS AY15
VSS AY18
VSS AY19
VSS AY25
VSS AY41
VSS BA4
VSS BA9
VSS BA14
VSS BA18
VSS BA21
VSS BA23
VSS BA26
VSS BA27
VSS BA29
VSS BA30
VSS BA32
VSS BA33
VSS BA35
VSS BA36
VSS BA38
VSS BA39
VSS BA40
VSS BB1
VSS BB2
VSS BB5
VSS BB8
VSS BB12
VSS BB17
VSS BB18
VSS BB42
VSS BB43
VSS BC2
VSS BC6
VSS BC11
VSS BC15
VSS BC18
VSS BC42
REV 0.90
ellesmere_l4

MICRO-STAR INT'L CO.,LTD

MS-V341

Size	Document Description	Rev
Custom	TABLE OF CONTENTS	1.0

Date: Tuesday, August 09, 2016
Sheet 13 of 26

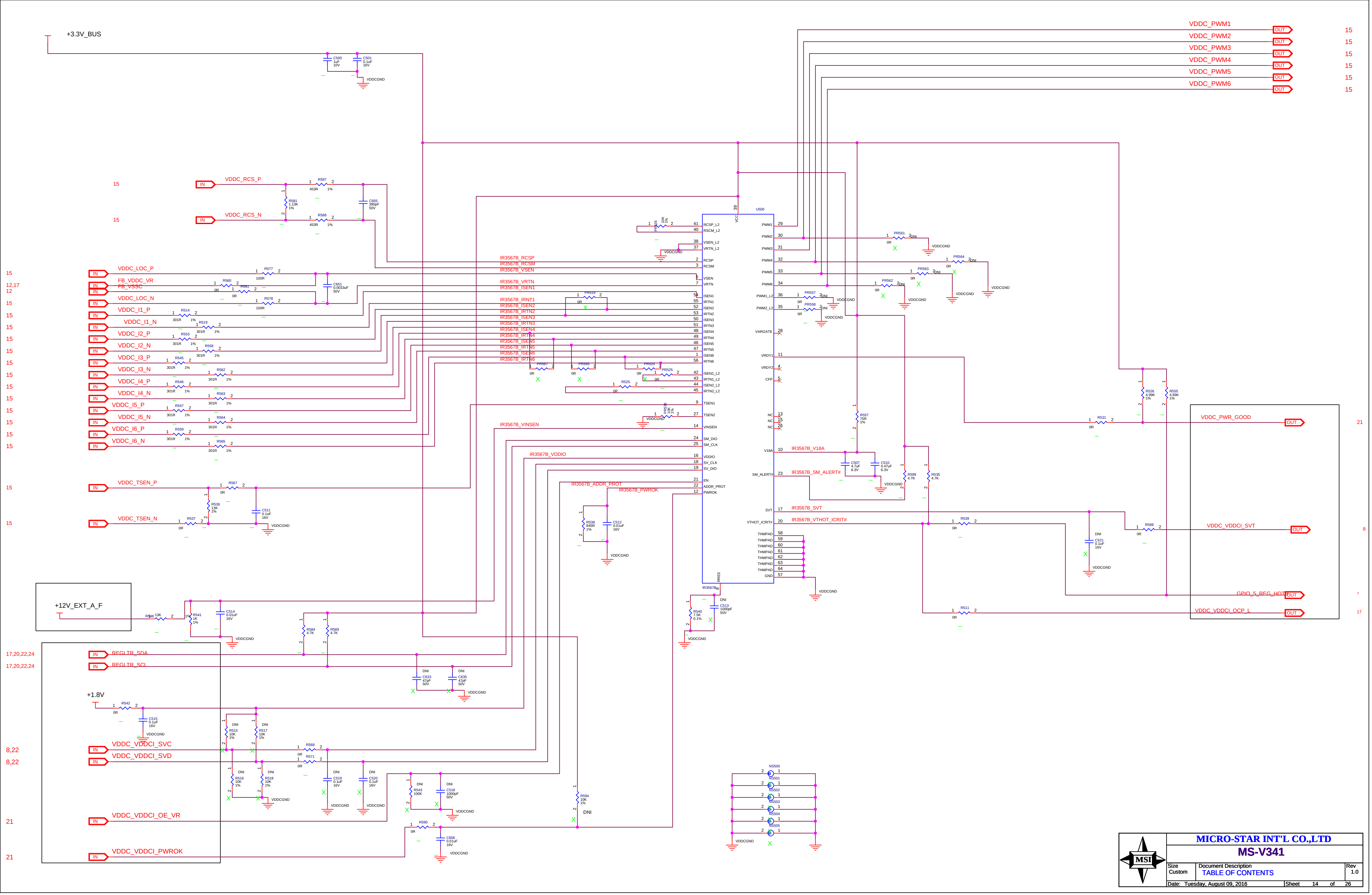
+3.3V_BUS
C500 1uF 10V
C501 0.1uF 16V
VDDCGND
VDDC_PWM1 OUT 15
VDDC_PWM2 OUT 15
VDDC_PWM3 OUT 15
VDDC_PWM4 OUT 15
VDDC_PWM5 OUT 15
VDDC_PWM6 OUT 15
15 IN VDDC_RCS_P
15 IN VDDC_RCS_N
R587 453R 1%
R588 453R 1%
R581 1.13K 1%
C655 390pF 50V
U500
VCC 39
RCSP_L2 41
RCSM_L2 40
VSEN_L2 38
VRTN_L2 37
RCSP 2
RCSM 3
VSEN 6
VRTN 7
ISEN1 54
IRTN1 55
ISEN2 52
IRTN2 53
ISEN3 50
IRTN3 51
ISEN4 48
IRTN4 49
ISEN5 46
IRTN5 47
ISEN6 1
IRTN6 56
ISEN1_L2 42
IRTN1_L2 43
ISEN2_L2 44
IRTN2_L2 45
TSEN1 9
TSEN2 27
VINSEN 14
SM_DIO 24
SM_CLK 25
VDDIO 16
SV_CLK 18
SV_DIO 19
EN 21
ADDR_PROT 22
PWROK 12
RRES
PWM1 29
PWM2 30
PWM3 31
PWM4 32
PWM5 33
PWM6 34
PWM1_L2 36
PWM2_L2 35
VARGATE 28
VRDY1 11
VRDY2 4
CFP 5
NC 13
NC 15
NC 26
V18A 10
SM_ALERT# 23
SVT 17
VTHOT_ICRIT# 20
THMPAD 58
THMPAD 59
THMPAD 60
THMPAD 61
THMPAD 62
THMPAD 63
THMPAD 64
GND 57
IR3567B_RCSP
IR3567B_RCSM
IR3567B_VSEN
IR3567B_VRTN
IR3567B_ISEN1
IR3567B_IRNT1
IR3567B_ISEN2
IR3567B_IRTN2
IR3567B_ISEN3
IR3567B_IRTN3
IR3567B_ISEN4
IR3567B_IRTN4
IR3567B_ISEN5
IR3567B_IRTN5
IR3567B_ISEN6
IR3567B_IRTN6
IR3567B_VINSEN
IR3567B_VDDIO
IR3567B_ADDR_PROT
IR3567B_PWROK
IR3567B_V18A
IR3567B_SM_ALERT#
IR3567B_SVT
IR3567B_VTHOT_ICRIT#
15 IN VDDC_LOC_P
12,17 IN FB_VDDC_VR
12 IN FB_VSSC
15 IN VDDC_LOC_N
15 IN VDDC_I1_P
15 IN VDDC_I1_N
15 IN VDDC_I2_P
15 IN VDDC_I2_N
15 IN VDDC_I3_P
15 IN VDDC_I3_N
15 IN VDDC_I4_P
15 IN VDDC_I4_N
15 IN VDDC_I5_P
15 IN VDDC_I5_N
15 IN VDDC_I6_P
15 IN VDDC_I6_N
R577 100R
R578 100R
R560 0R
R561 0R
C651 0.0033uF 50V
R514 301R 1%
R519 301R 1%
R553 301R 1%
R558 301R 1%
R545 301R 1%
R562 301R 1%
R546 301R 1%
R563 301R 1%
R547 301R 1%
R564 301R 1%
R559 301R 1%
R565 301R 1%
PR519 0R
PR567 0R
PR566 0R
PR520 0R
PR525 0R
R520 0R
PR536 10K 1%
PR538 10K 1%
PR561 0R DNI
PR564 0R DNI
PR563 0R DNI
PR562 0R DNI
PR557 0R DNI
PR558 0R DNI
R557 75R 1%
C507 4.7uF 6.3V
C510 0.47uF 6.3V
R599 4.7K
R535 4.7K
R526 4.99K 1%
R555 4.99K 1%
R531 0R
VDDC_PWR_GOOD OUT 21
R539 0R
R598 0R
C521 DNI 0.1uF 16V
VDDC_VDDCI_SVT OUT 8
GPIO_5_REG_HOT OUT 7
R511 0R
VDDC_VDDCI_OCP_L OUT 17
15 IN VDDC_TSEN_P
15 IN VDDC_TSEN_N
R567 0R
R536 13K 1%
R537 0R
C511 0.1uF 16V
R538 845R 1%
C512 0.01uF 16V
R540 7.5K 0.1%
C513 DNI 1000pF 50V
+12V_EXT_A_F
R548 13K
R541 1K 1%
C514 0.01uF 16V
R584 4.7K
R589 4.7K
17,20,22,24 IN REGLTR_SDA
17,20,22,24 IN REGLTR_SCL
C633 DNI 47pF 50V
C635 DNI 47pF 50V
+1.8V
R542 0R
C515 0.1uF 16V
R515 DNI 10K 1%
R517 DNI 10K 1%
R516 DNI 10K 1%
R518 DNI 10K 1%
R568 0R
R571 0R
8,22 IN VDDC_VDDCI_SVC
8,22 IN VDDC_VDDCI_SVD
C519 DNI 0.1uF 16V
C520 DNI 0.1uF 16V
R543 DNI 100K
C518 DNI 1000pF 50V
R594 10K 1% DNI
21 IN VDDC_VDDCI_OE_VR
21 IN VDDC_VDDCI_PWROK
R590 0R
C656 0.01uF 16V
NS500
NS501
NS502
NS503
NS504
NS505

MICRO-STAR INT'L CO.,LTD

MS-V341

Size	Document Description	Rev
Custom	TABLE OF CONTENTS	1.0

Date: Tuesday, August 09, 2016 Sheet 14 of 26

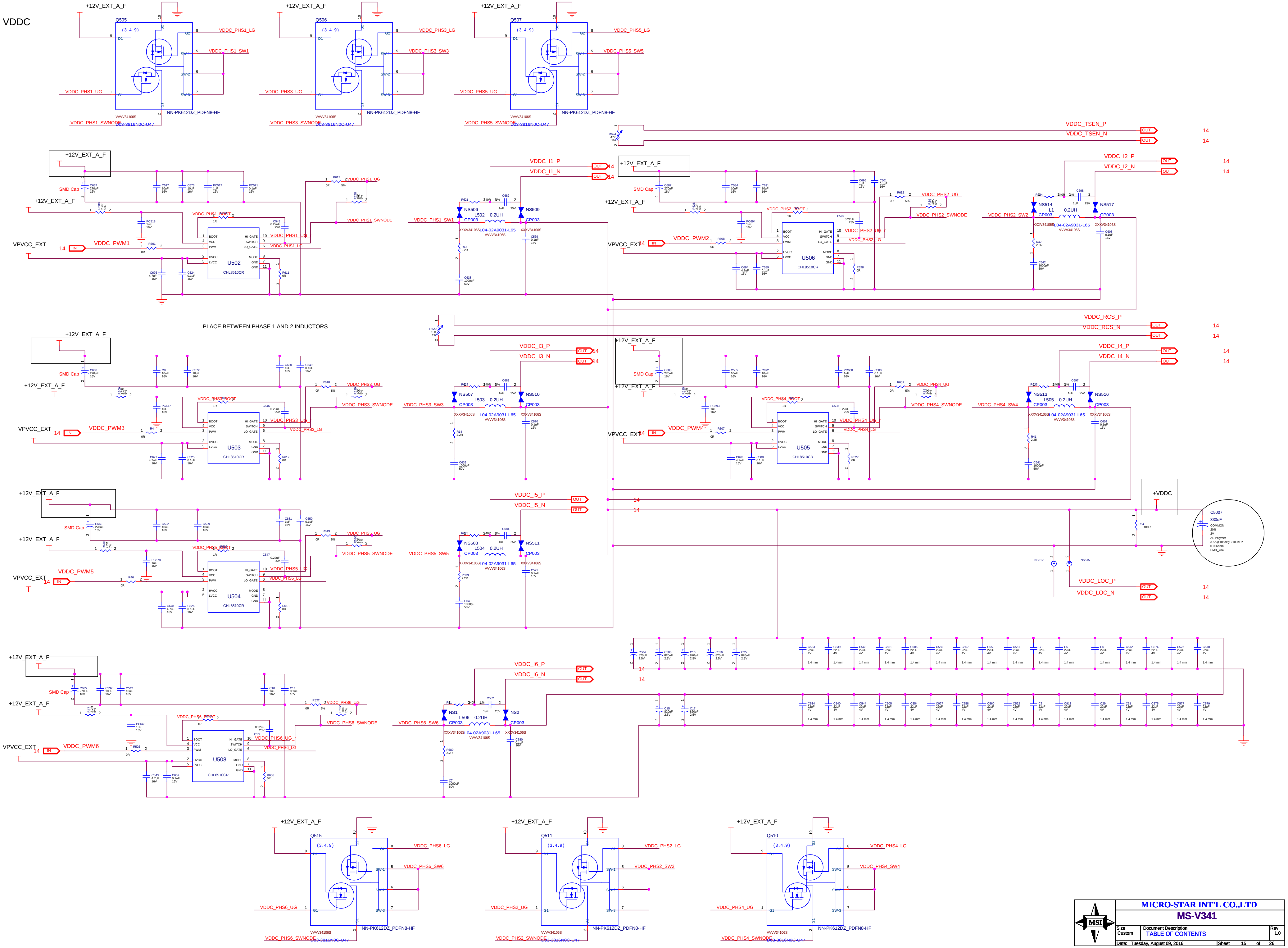
VDDC
+12V_EXT_A_F
Q505
Q506
Q507
Q515
Q511
Q510
(3.4.9)
D1
G1
G2
S1
S2
SW-1
SW-2
SW-3
NN-PK612DZ_PDFN8-HF
VVVV34106S
D03-3816N0C-U47
VDDC_PHS1_LG
VDDC_PHS1_SW1
VDDC_PHS1_UG
VDDC_PHS1_SWNODE
VDDC_PHS3_LG
VDDC_PHS3_SW3
VDDC_PHS3_UG
VDDC_PHS3_SWNODE
VDDC_PHS5_LG
VDDC_PHS5_SW5
VDDC_PHS5_UG
VDDC_PHS5_SWNODE
VDDC_PHS6_LG
VDDC_PHS6_SW6
VDDC_PHS6_UG
VDDC_PHS6_SWNODE
VDDC_PHS2_LG
VDDC_PHS2_SW2
VDDC_PHS2_UG
VDDC_PHS2_SWNODE
VDDC_PHS4_LG
VDDC_PHS4_SW4
VDDC_PHS4_UG
VDDC_PHS4_SWNODE
VDDC_TSEN_P
VDDC_TSEN_N
R624 47K 1%
R620 10K 1%
PLACE BETWEEN PHASE 1 AND 2 INDUCTORS
VDDC_RCS_P
VDDC_RCS_N
VDDC_I1_P
VDDC_I1_N
VDDC_I2_P
VDDC_I2_N
VDDC_I3_P
VDDC_I3_N
VDDC_I4_P
VDDC_I4_N
VDDC_I5_P
VDDC_I5_N
VDDC_I6_P
VDDC_I6_N
VDDC_LOC_P
VDDC_LOC_N
OUT
IN
14
SMD Cap
VPVCC_EXT
VDDC_PWM1
VDDC_PWM2
VDDC_PWM3
VDDC_PWM4
VDDC_PWM5
VDDC_PWM6
VDDC_PHS1_BOOT
VDDC_PHS2_BOOT
VDDC_PHS3_BOOT
VDDC_PHS4_BOOT
VDDC_PHS5_BOOT
VDDC_PHS6_BOOT
U502
U503
U504
U505
U506
U508
CHL8510CR
BOOT
VCC
PWM
HVCC
LVCC
HI_GATE
SWITCH
LO_GATE
MODE
GND
C667 270uF 16V
C668 270uF 16V
C669 270uF 16V
C685 270uF 16V
C687 270uF 16V
C688 270uF 16V
C517 10uF 16V
C673 10uF 16V
PC517 1uF 16V
PC521 0.1uF 16V
C8 10uF 16V
C672 10uF 16V
C680 1uF 16V
C549 0.1uF 16V
C522 10uF 16V
C529 10uF 16V
C681 1uF 16V
C550 0.1uF 16V
C537 10uF 16V
C542 10uF 16V
C10 1uF 16V
C14 0.1uF 16V
C584 10uF 16V
C691 10uF 16V
C696 1uF 16V
C601 0.1uF 16V
C585 10uF 16V
C692 10uF 16V
PC600 1uF 16V
C600 0.1uF 16V
R608 2.2R 5%
R609 2.2R 5%
R610 2.2R 5%
R47 2.2R 5%
R626 2.2R 5%
R625 2.2R 5%
PC518 1uF 16V
PC677 1uF 16V
PC678 1uF 16V
PC643 1uF 16V
PC694 1uF 16V
PC693 1uF 16V
R504 1R
R50 1R
R500 1R
R655 1R
R53 1R
R52 1R
C545 0.22uF 25V
C546 0.22uF 25V
C547 0.22uF 25V
C13 0.22uF 25V
C599 0.22uF 25V
C598 0.22uF 25V
R501 0R
R4 0R
R46 0R
R502 0R
R508 0R
R507 0R
C676 4.7uF 16V
C524 0.1uF 16V
C677 4.7uF 16V
C525 0.1uF 16V
C678 4.7uF 16V
C526 0.1uF 16V
C643 4.7uF 16V
C657 0.1uF 16V
C694 4.7uF 16V
C589 0.1uF 16V
C693 4.7uF 16V
C588 0.1uF 16V
R611 0R
R612 0R
R613 0R
R656 0R
R628 0R
R627 0R
R617 0R 5%
R618 0R 5%
R619 0R 5%
R522 0R 5%
R632 0R 5%
R631 0R 5%
R528 10K 5%
R529 10K 5%
R530 10K 5%
R652 10K 5%
R29 10K 5%
R28 10K 5%
R621 2.40R 1%
R622 2.40R 1%
R623 2.40R 1%
R51 2.40R 1%
R634 2.40R 1%
R633 2.40R 1%
C682 1uF 25V
C683 1uF 25V
C684 1uF 25V
C582 1uF 25V
C698 1uF 25V
C697 1uF 25V
NS506
NS509
NS507
NS510
NS508
NS511
NS1
NS2
NS514
NS517
NS513
NS516
CP003
L502 0.2UH
L503 0.2UH
L504 0.2UH
L506 0.2UH
L1 0.2UH
L505 0.2UH
L04-02A9031-L65
XXXV34106S
VVVV34106S
C569 0.1uF 16V
C570 0.1uF 16V
C571 0.1uF 16V
C580 0.1uF 16V
C603 0.1uF 16V
C602 0.1uF 16V
R12 2.2R
R14 2.2R
R533 2.2R
R689 2.2R
R42 2.2R
R41 2.2R
C638 1000pF 50V
C639 1000pF 50V
C640 1000pF 50V
C7 1000pF 50V
C642 1000pF 50V
C641 1000pF 50V
+VDDC
R54 100R
C5007
330uF
COMMON
20%
2V
AL-Polymer
3.5A@105degC,100KHz
0.006ohm
SMD_7343
NS512
NS515
C504 820uF 2.5V
C506 820uF 2.5V
C16 820uF 2.5V
C516 820uF 2.5V
C25 820uF 2.5V
C15 820uF 2.5V
C17 820uF 2.5V
C533 22uF 4V
C539 22uF 4V
C543 22uF 4V
C551 22uF 4V
C906 22uF 4V
C555 22uF 4V
C557 22uF 4V
C559 22uF 4V
C561 22uF 4V
C3 22uF 4V
C5 22uF 4V
C6 22uF 4V
C572 22uF 4V
C574 22uF 4V
C576 22uF 4V
C578 22uF 4V
C534 22uF 4V
C540 22uF 4V
C544 22uF 4V
C905 22uF 4V
C554 22uF 4V
C927 22uF 4V
C558 22uF 4V
C560 22uF 4V
C562 22uF 4V
C2 22uF 4V
C913 22uF 4V
C29 22uF 4V
C31 22uF 4V
C575 22uF 4V
C577 22uF 4V
C579 22uF 4V
1.4 mm

MICRO-STAR INT'L CO.,LTD

MS-V341

Size	Document Description	Rev
Custom	TABLE OF CONTENTS	1.0

Date: Tuesday, August 09, 2016 Sheet 15 of 26

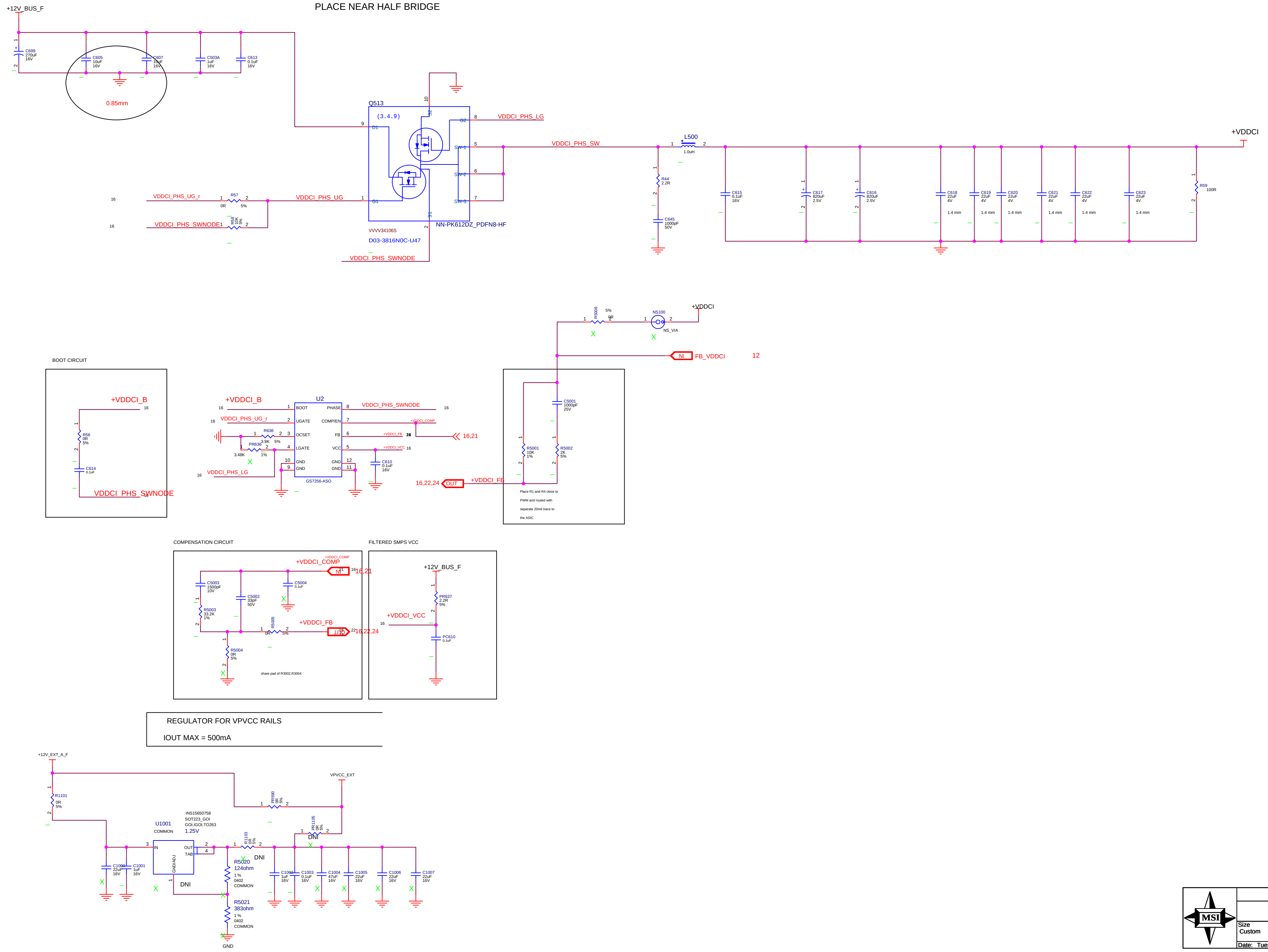

PLACE NEAR HALF BRIDGE
+12V_BUS_F
C699 270uF 16V
C605 10uF 16V
C607 10uF 16V
C503A 1uF 16V
C613 0.1uF 16V
0.85mm
Q513
(3.4.9)
D1
G1
G2
S2
SW-1
SW-2
SW-3
S1
VVVV34106S
D03-3816N0C-U47
NN-PK612DZ_PDFN8-HF
VDDCI_PHS_LG
VDDCI_PHS_SW
VDDCI_PHS_UG_r
VDDCI_PHS_UG
VDDCI_PHS_SWNODE
R57 0R 5%
R58 10K 5%
L500 1.0uH
+VDDCI
R44 2.2R
C645 1000pF 50V
C615 0.1uF 16V
C617 820uF 2.5V
C616 820uF 2.5V
C618 22uF 4V
C619 22uF 4V
C620 22uF 4V
C621 22uF 4V
C622 22uF 4V
C623 22uF 4V
1.4 mm
R59 100R
R5006 5% 0R
NS100
NS_VIA
FB_VDDCI
12
BOOT CIRCUIT
+VDDCI_B
R56 0R 5%
C614 0.1uF
VDDCI_PHS_SWNODE
U2
BOOT
UGATE
OCSET
LGATE
GND
PHASE
COMP/EN
FB
VCC
GS7256-ASO
R636 3.9K 5%
PR636 3.48K 1%
VDDCI_PHS_LG
+VDDCI_COMP
+VDDCI_FB
+VDDCI_VCC
28
C610 0.1uF 16V
16,21
16,22,24
OUT
NI
C5001 1000pF 25V
R5001 10K 1%
R5002 2K 5%
Place R1 and R4 close to PWM and routed with separate 20mil trace to the ASIC
COMPENSATION CIRCUIT
C5003 1500pF 10V
C5002 33pF 50V
C5004 0.1uF
R5003 33.2K 1%
R5005 0R 5%
R5004 0R 5%
share pad of R3002,R3004
FILTERED SMPS VCC
PR637 2.2R 5%
PC610 0.1uF
REGULATOR FOR VPVCC RAILS
IOUT MAX = 500mA
+12V_EXT_A_F
R1101 0R 5%
U1001
COMMON
INS15650758
SOT223_GOI
GOI,IGOI,TO263
1.25V
IN
OUT
TAB
GND/ADJ
DNI
VPVCC_EXT
R5990 0R 5%
R11105 0R 5%
R1103 0R 5%
R5020 124ohm 1% 0402 COMMON
R5021 383ohm 1% 0402 COMMON
C1000 22uF 16V
C1001 1uF 16V
C1002 1uF 16V
C1003 0.1uF 16V
C1004 47uF 16V
C1005 22uF 16V
C1006 22uF 16V
C1007 22uF 16V
GND

MICRO-STAR INT'L CO.,LTD

MS-V341

Size	Document Description	Rev
Custom	TABLE OF CONTENTS	1.0

Date: Tuesday, August 09, 2016 | Sheet 16 of 26

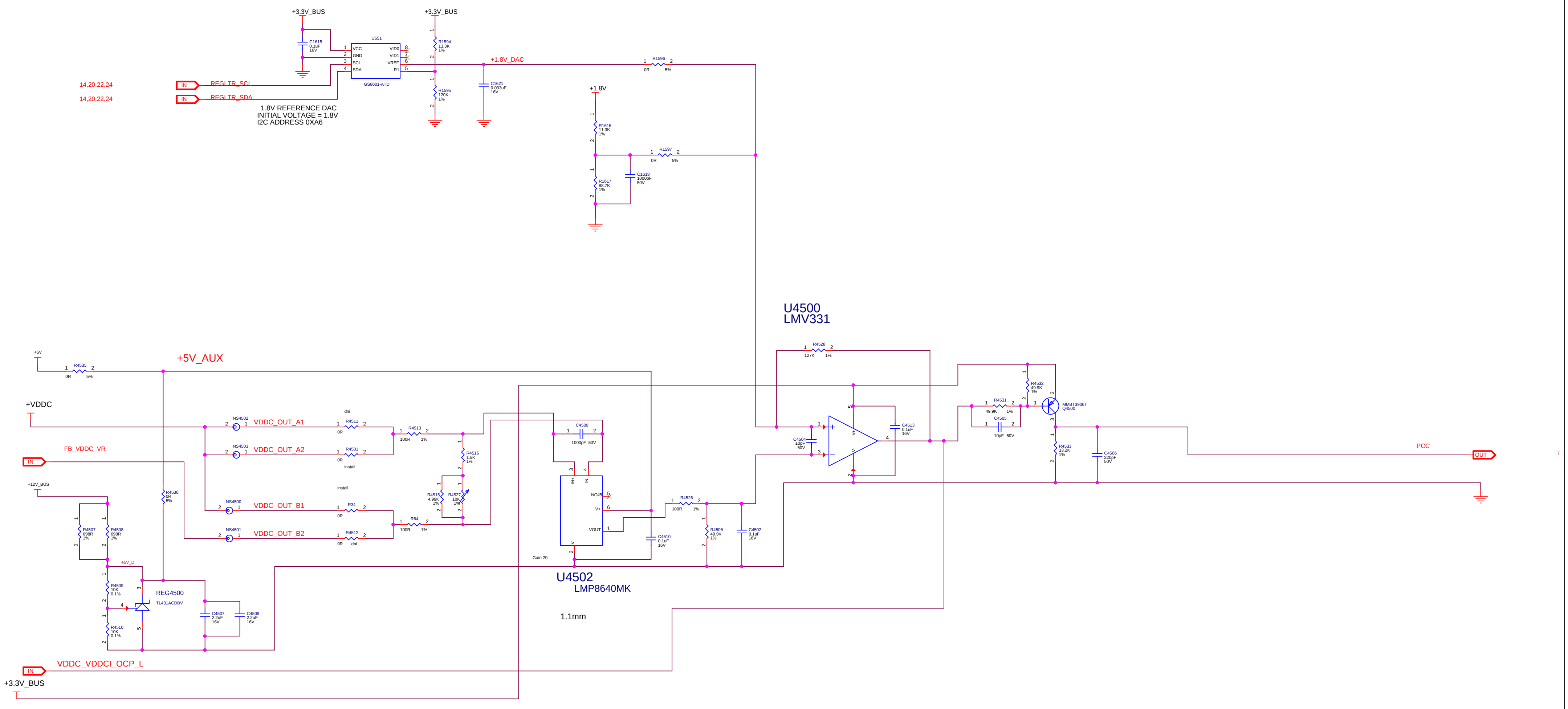
+3.3V_BUS
C1615
0.1uF
16V
U551
VCC
GND
SCL
SDA
VID0
VID1
VREF
R1
GS8601-ATD
+3.3V_BUS
R1594
13.3K
1%
+1.8V_DAC
R1595
120K
1%
C1621
0.033uF
16V
R1596
0R
5%
14,20,22,24
IN
REGLTR_SCL
14,20,22,24
IN
REGLTR_SDA
1.8V REFERENCE DAC
INITIAL VOLTAGE = 1.8V
I2C ADDRESS 0XA6
+1.8V
R1616
11.3K
1%
R1597
0R
5%
R1617
88.7K
1%
C1618
1000pF
50V
U4500
LMV331
R4528
127K
1%
+5V
R4535
0R
5%
+5V_AUX
+VDDC
NS4502
VDDC_OUT_A1
dni
R4511
0R
R4513
100R
1%
C4500
1000pF 50V
NS4503
VDDC_OUT_A2
R4501
0R
install
R4516
1.5K
1%
FB_VDDC_VR
IN
+12V_BUS
R4536
0R
5%
install
R4515
4.99K
1%
R4527
10K
1%
IN+
IN-
NC#5
V+
VOUT
V-
NS4500
VDDC_OUT_B1
R34
0R
NS4501
VDDC_OUT_B2
R4512
0R
dni
R64
100R
1%
R4507
698R
1%
R4508
698R
1%
+5V_D
R4509
10K
0.1%
REG4500
TL431ACDBV
R4510
10K
0.1%
C4507
2.2uF
16V
C4508
2.2uF
16V
Gain 20
U4502
LMP8640MK
C4510
0.1uF
16V
R4526
100R
1%
R4506
49.9K
1%
C4502
0.1uF
16V
1.1mm
C4504
10pF
50V
C4513
0.1uF
16V
R4532
49.9K
1%
R4531
49.9K
1%
C4505
10pF 50V
MMBT3906T
Q4500
R4533
33.2K
1%
C4506
220pF
50V
PCC
OUT
7
IN
VDDC_VDDCI_OCP_L
+3.3V_BUS

MICRO-STAR INT'L CO.,LTD

MS-V341

Size
Custom

Document Description
TABLE OF CONTENTS

Rev
1.0

Date: Tuesday, August 09, 2016

Sheet 17 of 26

(16) MVDD

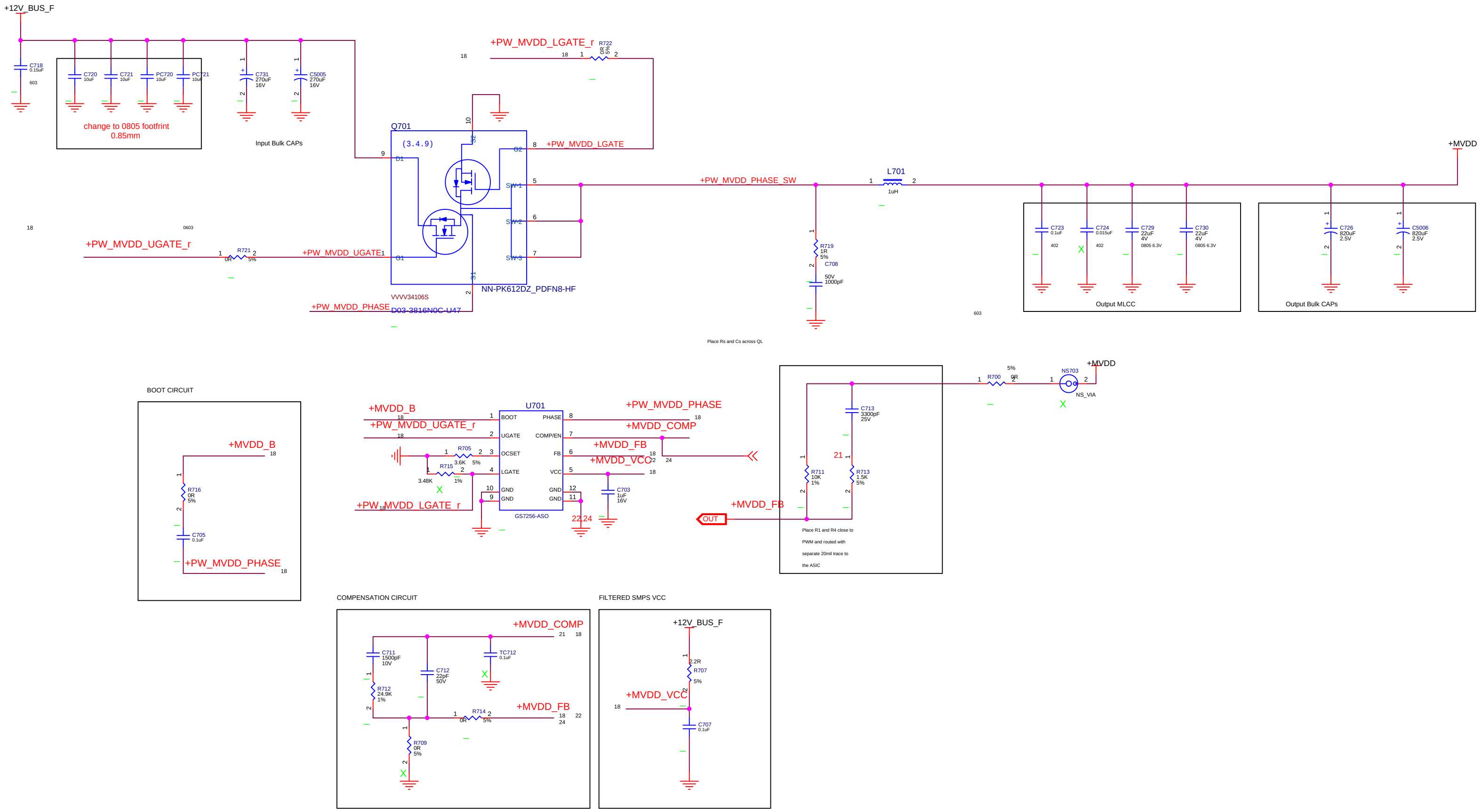
+12V_BUS_F
C719 0.15uF 603
C720 10uF
C721 10uF
PC720 10uF
PC721 10uF
change to 0805 footfrint 0.85mm
C731 270uF 16V
C5005 270uF 16V
Input Bulk CAPs
+PW_MVDD_LGATE_r
R722 0R 5%
Q701
(3.4.9)
D1
G2
SW-1
SW-2
SW-3
G1
S1
+PW_MVDD_LGATE
NN-PK612DZ_PDFN8-HF
VVVV341065
D03-3816N0C-U47
+PW_MVDD_UGATE_r
R721 0R 5%
+PW_MVDD_UGATE
+PW_MVDD_PHASE
0603
+PW_MVDD_PHASE_SW
L701 1uH
R719 1R 5%
C708 50V 1000pF
603
Place Rs and Cs across QL
+MVDD
C723 0.1uF 402
C724 0.015uF 402
C729 22uF 4V 0805 6.3V
C730 22uF 4V 0805 6.3V
Output MLCC
C726 820uF 2.5V
C5006 820uF 2.5V
Output Bulk CAPs
BOOT CIRCUIT
+MVDD_B
R716 0R 5%
C705 0.1uF
+PW_MVDD_PHASE
U701
BOOT
UGATE
OCSET
LGATE
GND
GND
PHASE
COMP/EN
FB
VCC
GND
GND
GS7256-ASO
+PW_MVDD_UGATE_r
R705 3.6K 5%
R715 3.48K 1%
+PW_MVDD_LGATE_r
+PW_MVDD_PHASE
+MVDD_COMP
+MVDD_FB
+MVDD_VCC
C703 1uF 16V
22,24
R700 0R 5%
NS703 NS_VIA
C713 3300pF 25V
R711 10K 1%
R713 1.5K 5%
+MVDD_FB
OUT
Place R1 and R4 close to
PWM and routed with
separate 20mil trace to
the ASIC
COMPENSATION CIRCUIT
+MVDD_COMP
C711 1500pF 10V
C712 22pF 50V
TC712 0.1uF
R712 24.9K 1%
R714 0R 5%
+MVDD_FB
R709 0R 5%
FILTERED SMPS VCC
+12V_BUS_F
R707 2.2R 5%
+MVDD_VCC
C707 0.1uF

MICRO-STAR INT'L CO.,LTD

MS-V341

Size	Document Description	Rev
Custom	TABLE OF CONTENTS	1.0

Date: Tuesday, August 09, 2016 Sheet 18 of 26

(17) 0.95V

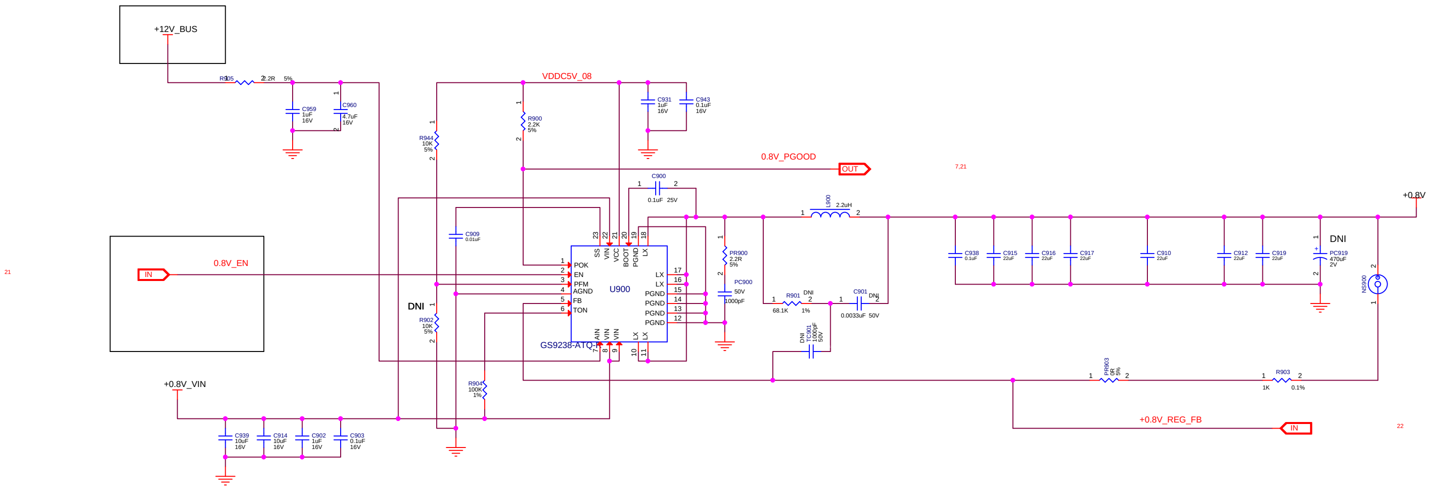
+12V_BUS
R905 2.2R 5%
C959 1uF 16V
C960 4.7uF 16V
VDDC5V_08
R944 10K 5%
R900 2.2K 5%
C931 1uF 16V
C943 0.1uF 16V
0.8V_PGOOD
OUT
7,21
C900 0.1uF 25V
L900 2.2uH
+0.8V
C909 0.01uF
21
IN
0.8V_EN
DNI
R902 10K 5%
U900
GS9238-ATQ-R
POK
EN
PFM
AGND
FB
TON
SS
VIN
VCC
BOOT
PGND
LX
AIN
PR900 2.2R 5%
PC900 50V 1000pF
R901 DNI 68.1K 1%
C901 DNI 0.0033uF 50V
DNI TC901 1000pF 50V
C938 0.1uF
C915 22uF
C916 22uF
C917 22uF
C910 22uF
C912 22uF
C919 22uF
DNI
PC919 470uF 2V
NS900
R904 100K 1%
PR903 0R 5%
R903 1K 0.1%
+0.8V_VIN
+0.8V_REG_FB
IN
22
C939 10uF 16V
C914 10uF 16V
C902 1uF 16V
C903 0.1uF 16V

MICRO-STAR INT'L CO.,LTD

MS-V341

Size	Document Description	Rev
Custom	TABLE OF CONTENTS	1.0

Date: Tuesday, August 09, 2016 Sheet 19 of 26

(18) SMALL RAIL REGULATORS , LED_CONTROLLER_ENE3574

LDO #1: VIN = 3.0V TO 3.6V MAX VOUT = +1.8V +/- 2% IOUT = 1.3A RMS MAX

PCB: 50 TO 70mm SQ. COPPER AREA FOR COOLING

REGULATOR FOR +5V RAILS

IOUT MAX = 150mA

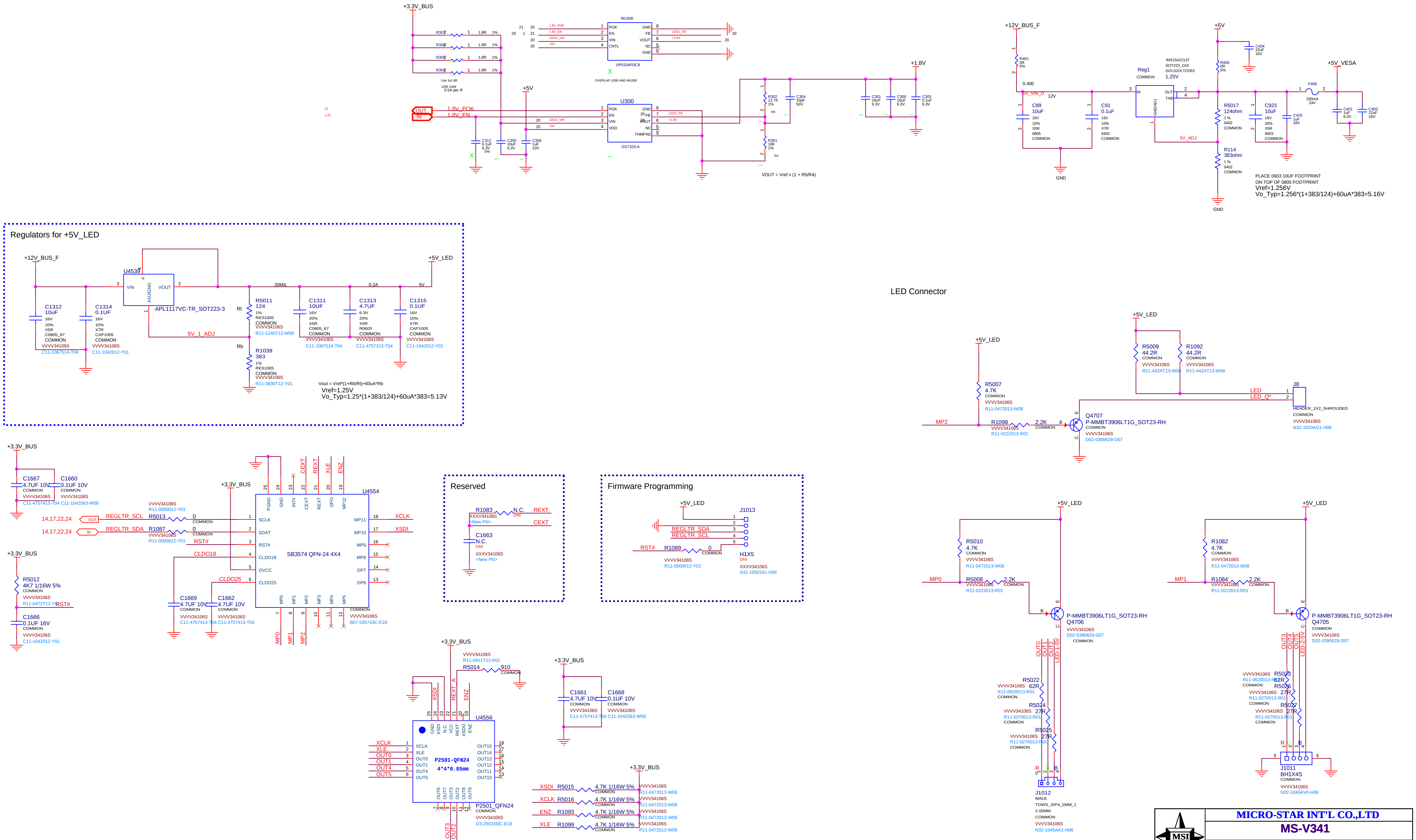
+3.3V_BUS
R307 1.8R 1%
R306 1.8R 1%
R305 1.8R 1%
R304 1.8R 1%
Use 3x1.8R
1206 1/2W
0.5A per R
MU300
POK EN VIN CNTL GND FB VOUT NC GND
UP0104PDC8
1.8V_POK
1.8V_EN
LDO1_VIN
+5V
LDO1_FB
+1.8V
OVERLAP U300 AND MU300
U300
POK EN VIN VDD GND FB VOUT NC THMPAD
GS7103-A
OUT 1.8V_POK
IN 1.8V_EN
C312 0.1uF 6.3V DNI
C305 10uF 6.3V
C306 1uF 10V
+1.8V
R302 12.7K 1% R5
R301 10K 1% R4
C304 33pF 50V
C301 10uF 6.3V
C300 10uF 6.3V
C303 0.1uF 6.3V
VOUT = Vref x (1 + R5/R4)
+12V_BUS_F
R401 0R 5%
0.400
5V_VIN_D
12V
C89 10uF 16V 10% X5R 0805 COMMON
C91 0.1uF 16V 10% X7R 0402 COMMON
GND
Reg1
COMMON
INS15422137
SOT223_GOI
GOI,IGOI,TO263
1.25V
IN OUT TAB GND/ADJ
5V_ADJ
+5V
C404 22uF 16V
R406 0R 5%
R5017 124ohm 1 % 0402 COMMON
R114 383ohm 1 % 0402 COMMON
C923 10uF 16V 20% X5R 0603 COMMON
C425 1uF 16V
F400 200mA 24V
+5V_VESA
C401 1uF 6.3V
C403 22uF 16V
PLACE 0603 10UF FOOTPRINT
ON TOP OF 0805 FOOTPRINT
Vref=1.256V
Vo_Typ=1.256*(1+383/124)+60uA*383=5.16V
Regulators for +5V_LED
+12V_BUS_F
+5V_LED
U4539
VIN ADJ/GND VOUT
APL1117VC-TR_SOT223-3
C1312 10uF 16V 10% X5R C0805_67 COMMON VVVV34106S C11-1067514-T04
C1314 0.1UF 16V 10% X7R CAP1005 COMMON VVVV34106S C11-1042012-Y01
5V_1_ADJ
20MIL
0.2A
5V
Rt
R5011 124 1% RES1005 COMMON VVVV34106S R11-1240T12-W08
Rb
R1039 383 1% RES1005 COMMON VVVV34106S R11-3830T12-Y01
C1311 10UF 16V 20% X5R C0805_67 COMMON VVVV34106S C11-1067514-T04
C1313 4.7UF 6.3V 20% X5R R0603 COMMON VVVV34106S C11-4757313-T04
C1315 0.1UF 16V 10% X7R CAP1005 COMMON VVVV34106S C11-1042012-Y01
Vout = Vref*(1+Rb/Rt)+60uA*Rb
Vref=1.25V
Vo_Typ=1.25*(1+383/124)+60uA*383=5.13V
LED Connector
+5V_LED
R5009 44.2R COMMON VVVV34106S R11-442AT13-W08
R1092 44.2R COMMON VVVV34106S R11-442AT13-W08
R5007 4.7K COMMON VVVV34106S R11-0472013-W08
MP2
R1098 2.2K VVVV34106S R11-0222013-R01 COMMON
Q4707 P-MMBT3906LT1G_SOT23-RH COMMON VVVV34106S D02-0390629-D07
LED
LED_Q*
J8 HEADER_1X2_SHROUDED COMMON VVVV34106S N32-1020AG1-H06
+3.3V_BUS
C1667 4.7UF 10V COMMON VVVV34106S C11-4757413-T04
C1660 0.1UF 10V COMMON VVVV34106S C11-1042563-W08
14,17,22,24 OUT REGLTR_SCL
14,17,22,24 BI REGLTR_SDA
R5013 0 COMMON VVVV34106S R11-0000012-Y01
R1087 0 COMMON VVVV34106S R11-0000012-Y01
RST#
CLDO18
CLDO25
R5012 4K7 1/16W 5% COMMON VVVV34106S R11-0472T12-Y01
C1666 0.1UF 16V COMMON VVVV34106S C11-1042012-Y01
C1669 4.7UF 10V COMMON VVVV34106S C11-4757413-T04
C1662 4.7UF 10V COMMON VVVV34106S C11-4757413-T04
U4554
SB3574 QFN-24 4X4
PGND GND INT# CEXT REXT GPO MP12
SCLK SDAT RST# CLDO18 OVCC CLDO25
MP11 MP10 MP9 MP8 DP7 DP6
MP0 MP1 MP2 MP3 MP4 MP5
CEXT REXT XLE ENZ XCLK XSDI
COMMON VVVV34106S B07-035743C-E18
Reserved
R1083 N.C. DNI XXXV34106S <New PN> REXT CEXT
C1663 N.C. DNI XXXV34106S <New PN>
Firmware Programming
+5V_LED
J1013
REGLTR_SDA
REGLTR_SCL
RST# R1089 0 COMMON VVVV34106S R11-0000012-Y01
H1X5 DNI XXXV34106S N31-1050161-H06
R5014 910 COMMON VVVV34106S R11-0911T12-R01
XSDI REXT_A ENZ
U4556
GND XSDI N.C. VCC REXT XSDO ENZ
XCLK XLE OUT0 OUT1 OUT4 OUT5
P2501-QFN24 4*4*0.85mm
OUT15 OUT14 OUT13 OUT12 OUT11 OUT10
OUT6 OUT7 OUT3 OUT2 OUT8 OUT9
P2501_QFN24 COMMON VVVV34106S I23-2501N0C-E18
C1661 4.7UF 10V COMMON VVVV34106S C11-4757413-T04
C1668 0.1UF 10V COMMON VVVV34106S C11-1042563-W08
XSDI R5015 4.7K 1/16W 5% COMMON VVVV34106S R11-0472013-W08
XCLK R5016 4.7K 1/16W 5% COMMON VVVV34106S R11-0472013-W08
ENZ R1093 4.7K 1/16W 5% COMMON VVVV34106S R11-0472013-W08
XLE R1099 4.7K 1/16W 5% COMMON VVVV34106S R11-0472013-W08
R5010 4.7K COMMON VVVV34106S R11-0472013-W08
MP0 R5008 2.2K VVVV34106S R11-0222013-R01 COMMON
P-MMBT3906LT1G_SOT23-RH Q4706 VVVV34106S D02-0390629-D07 COMMON
OUT0 OUT1 OUT2 LED-1-5V
R5022 62R VVVV34106S R11-0620013-R01 COMMON
R5024 27R VVVV34106S R11-0270013-R01 COMMON
R5025 27R VVVV34106S R11-0270013-R01 COMMON
R G B
J1012 MALE TOWS_SIP4_2MM_1 2.00MM COMMON VVVV34106S N32-1040AA1-H06
R1082 4.7K COMMON VVVV34106S R11-0472013-W08
MP1 R1084 2.2K VVVV34106S R11-0222013-R01 COMMON
P-MMBT3906LT1G_SOT23-RH Q4705 COMMON VVVV34106S D02-0390629-D07
OUT3 OUT4 OUT5 LED-2-5V
R5023 62R VVVV34106S R11-0620013-R01 COMMON
R5026 27R VVVV34106S R11-0270013-R01 COMMON
R5027 27R VVVV34106S R11-0270013-R01 COMMON
J1011 BH1X4S COMMON VVVV34106S N32-1040AV0-H06

MICRO-STAR INT'L CO.,LTD

MS-V341

Size	Document Description	Rev
Custom	TABLE OF CONTENTS	1.0

Date: Tuesday, August 09, 2016 Sheet 20 of 26

(19) POWER MANAGEMENT

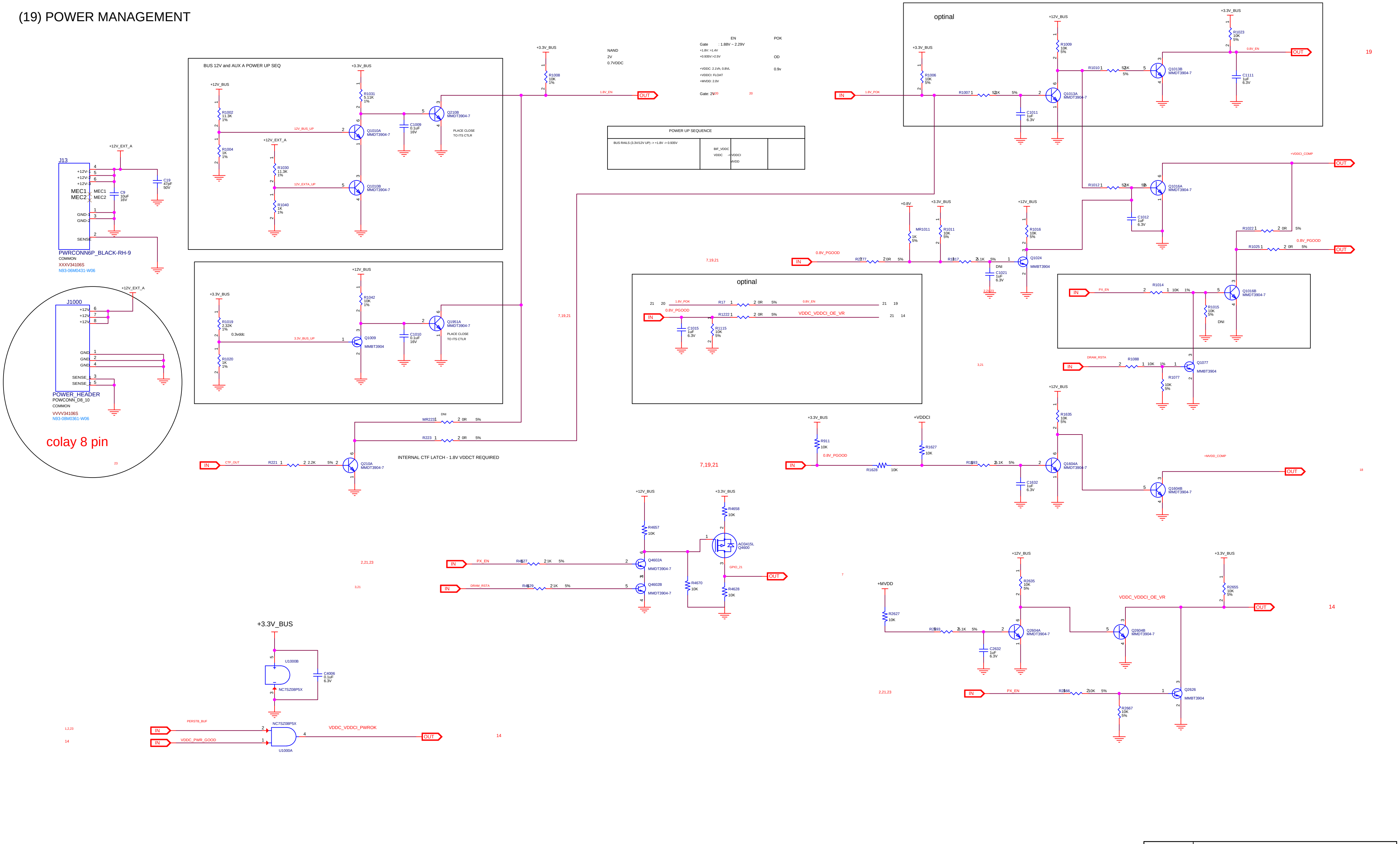
BUS 12V and AUX A POWER UP SEQ
+3.3V_BUS
+12V_BUS
+12V_EXT_A
R1031 5.11K 1%
R1002 11.3K 1%
R1004 1K 1%
R1030 11.3K 1%
R1040 1K 1%
12V_BUS_UP
12V_EXTA_UP
Q1010A MMDT3904-7
Q1010B MMDT3904-7
C1009 0.1uF 16V
Q210B MMDT3904-7
PLACE CLOSE TO ITS CTLR
R1008 10K 1%
1.8V_EN
OUT
NAND
2V
0.7VDDC
EN
Gate : 1.88V ~ 2.29V
+1.8V: >1.4V
+0.935V:>2.5V
+VDDC: 2.1Vh, 0.8VL
+VDDCI: FLOAT
+MVDD: 2.0V
Gate: 2V
POK
OD
0.9v
20
POWER UP SEQUENCE
BUS RAILS (3.3V/12V UP) -> +1.8V -> 0.935V
BIF_VDDC
VDDC
->VDDCI
MVDD
J13
+12V-1
+12V-2
+12V-3
MEC1
MEC2
GND-1
GND-2
SENSE
C9 10uF 16V
C19 47pF 50V
PWRCONN6P_BLACK-RH-9
COMMON
XXXV34106S
N93-06M0431-W06
J1000
+12V
GND
SENSE_1
SENSE_2
POWER_HEADER
POWCONN_D8_10
COMMON
VVVV34106S
N93-08M0361-W06
colay 8 pin
23
R1019 2.32K 1%
R1020 1K 1%
0.3vddc
3.3V_BUS_UP
Q1009 MMBT3904
R1042 10K 1%
C1010 0.1uF 16V
Q1951A MMDT3904-7
7,19,21
DNI
MR223 0R 5%
R223 0R 5%
INTERNAL CTF LATCH - 1.8V VDDCT REQUIRED
IN
CTF_OUT
R221 2.2K 5%
Q210A MMDT3904-7
optinal
R17 0R 5%
1.8V_POK
0.8V_EN
0.8V_PGOOD
R1222 0R 5%
VDDC_VDDCI_OE_VR
C1015 1uF 6.3V
R1115 10K 5%
21 20
21 19
21 14
optinal
+12V_BUS
R1009 10K 5%
R1006 10K 5%
R1007 5.1K 5%
C1011 1uF 6.3V
Q1013A MMDT3904-7
R1010 5.1K 5%
Q1013B MMDT3904-7
R1023 10K 5%
0.8V_EN
C1111 1uF 6.3V
19
+VDDCI_COMP
R1012 5.1K
Q1016A MMDT3904-7
C1012 1uF 6.3V
16
+0.8V
MR1011 1K 5%
R1011 10K 5%
R1016 10K 5%
R2177 0R 5%
R1017 5.1K 5%
Q1024 MMBT3904
C1021 1uF 6.3V
DNI
R1022 0R 5%
R1025 0R 5%
0.8V_PGOOD
7,19,21
PX_EN
R1014 10K 1%
R1015 10K 5%
DNI
Q1016B MMDT3904-7
DRAM_RSTA
R1088 10K 1%
R1077 10K 5%
Q1077 MMBT3904
3,21
+3.3V_BUS
+VDDCI
R911 10K
R1627 10K
R1628 10K
R1593 5.1K 5%
C1632 1uF 6.3V
R1635 10K 5%
Q1604A MMDT3904-7
Q1604B MMDT3904-7
+MVDD_COMP
18
7,19,21
R4657 10K
R4658 10K
AO3415L Q4600
GPIO_21
R4670 10K
R4628 10K
PX_EN
R4627 2.1K 5%
Q4602A MMDT3904-7
DRAM_RSTA
R4629 2.1K 5%
Q4602B MMDT3904-7
2,21,23
3,21
7
+MVDD
R2627 10K
R2593 5.1K 5%
C2632 1uF 6.3V
R2635 10K 5%
Q2604A MMDT3904-7
Q2604B MMDT3904-7
VDDC_VDDCI_OE_VR
R2655 10K 5%
14
2,21,23
R2666 10K 5%
R2667 10K 5%
Q2626 MMBT3904
+3.3V_BUS
U1000B
NC7SZ08P5X
C4006 0.1uF 6.3V
PERSTB_BUF
VDDC_PWR_GOOD
NC7SZ08P5X
U1000A
VDDC_VDDCI_PWROK
1,2,23
14
14

MICRO-STAR INT'L CO.,LTD

MS-V341

Size	Document Description	Rev
Custom	TABLE OF CONTENTS	1.0

Date: Tuesday, August 09, 2016 | Sheet 21 of 26

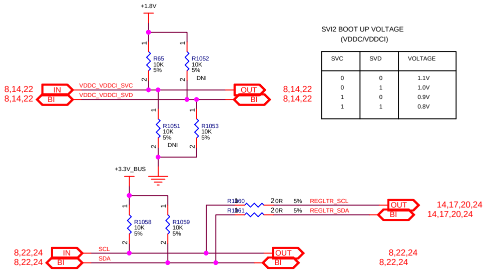
+1.8V
R65
10K
5%
R1052
10K
5%
DNI
8,14,22
IN
VDDC_VDDCI_SVC
OUT
8,14,22
8,14,22
BI
VDDC_VDDCI_SVD
BI
8,14,22
R1051
10K
5%
DNI
R1053
10K
5%
+3.3V_BUS
R1058
10K
5%
R1059
10K
5%
R1060
0R
5%
REGLTR_SCL
OUT
14,17,20,24
R1061
0R
5%
REGLTR_SDA
BI
14,17,20,24
8,22,24
IN
SCL
OUT
8,22,24
8,22,24
BI
SDA
BI
8,22,24

SVI2 BOOT UP VOLTAGE
(VDDC/VDDCI)

SVC	SVD	VOLTAGE
0	0	1.1V
0	1	1.0V
1	0	0.9V
1	1	0.8V

+12V_BUS INPUT

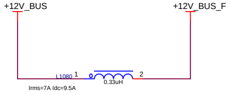
+12V_BUS
+12V_BUS_F
L1080
1
2
0.33uH
Irms=7A Idc=9.5A

+12V_EXT_A INPUT

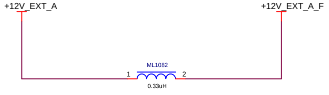
+12V_EXT_A
+12V_EXT_A_F
ML1082
1
2
0.33uH

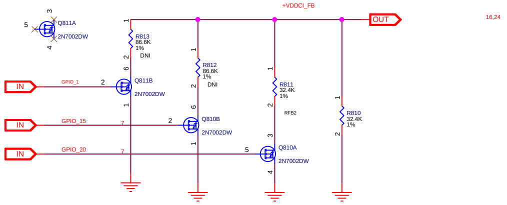
Q811A
2N7002DW
+VDDCI_FB
OUT
16,24
R813
86.6K
1%
DNI
R812
86.6K
1%
DNI
R811
32.4K
1%
RFB2
R810
32.4K
1%
IN
GPIO_1
Q811B
2N7002DW
IN
GPIO_15
Q810B
2N7002DW
IN
GPIO_20
Q810A
2N7002DW

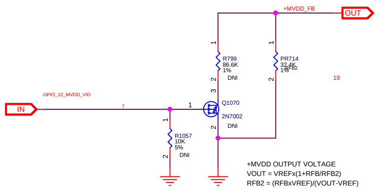
+MVDD_FB
OUT
R799
86.6K
1%
DNI
PR714
32.4K
1%
RFB2
19
GPIO_12_MVDD_VID
IN
Q1070
2N7002
DNI
R1057
10K
5%
DNI

+MVDD OUTPUT VOLTAGE
VOUT = VREFx(1+RFB/RFB2)
RFB2 = (RFBxVREF)/(VOUT-VREF)

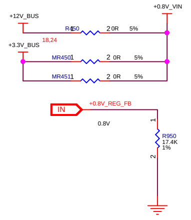
+12V_BUS
R450
0R
5%
+0.8V_VIN
18,24
+3.3V_BUS
MR450
0R
5%
MR451
0R
5%
IN
+0.8V_REG_FB
0.8V
R950
17.4K
1%

MICRO-STAR INT'L CO.,LTD

MS-V341

Size	Document Description	Rev
Custom	TABLE OF CONTENTS	1.0

Date: Tuesday, August 09, 2016 | Sheet 22 of 26

(20) MECHANICAL AND THERMAL MANAGEMENT

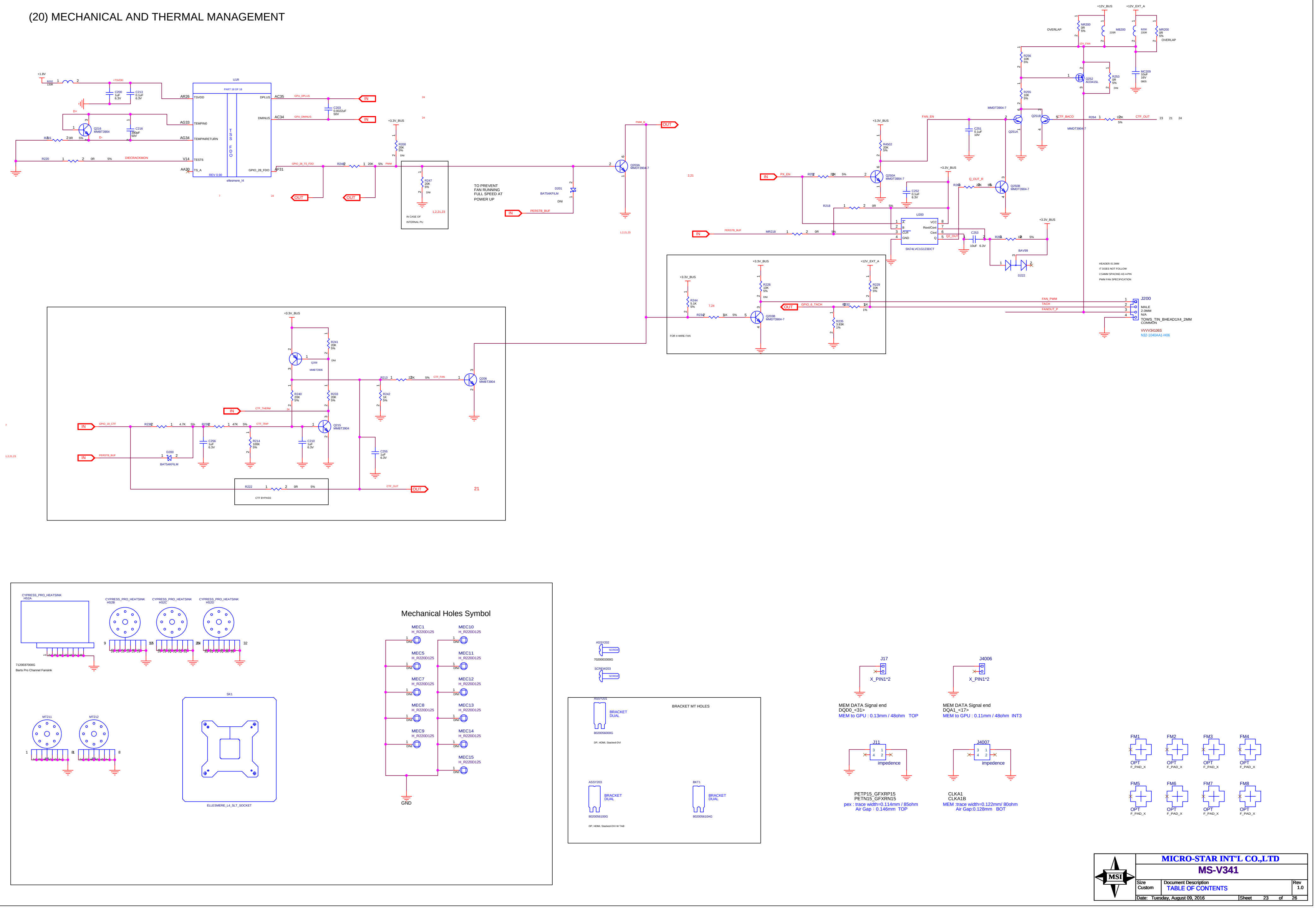

+1.8V
B202 120R
+TSVDD
C200 1uF 6.3V
C213 0.1uF 6.3V
D+
D-
Q216 MMBT3904
C216 330pF 50V
R215 0R 5%
R220 0R 5%
DIECRACKMON
U1R
PART 18 OF 18
AR26 TSVDD
AG33 TEMPIN0
AG34 TEMPINRETURN
V14 TEST6
AA30 TS_A
TSS FDO
REV 0.90
ellesmere_l4
DPLUS AC35
DMINUS AC34
GPIO_28_FDO AF31
GPU_DPLUS
GPU_DMINUS
C203 0.0022uF 50V
IN
OUT
GPIO_28_TS_FDO
R248 20K 5%
PWM
+3.3V_BUS
R200 20K 5% DNI
R247 20K 5% DNI
IN CASE OF INTERNAL PU
1,2,21,23
D201 BAT54KFILM DNI
PERSTB_BUF
PWM_R
Q203A MMDT3904-7
1,2,21,23
2,21
+12V_BUS
+12V_EXT_A
NR200 0R 5%
MB200 220R
B200 220R
MR200 0R 5%
OVERLAP
12V_FAN
R256 10K 5%
Q252 AO3415L
R253 0R 5% DNI
MC209 10uF 16V 0805
R255 10K 5%
MMDT3904-7
FAN_EN
C251 0.1uF 10V
Q251A
Q251B
CTF_BACO
R264 22K 5%
CTF_OUT
23 21 24
MMDT3904-7
R4502 20K 5%
PX_EN
R252 22K 5%
Q250A MMDT3904-7
C252 0.1uF 6.3V
Q_OUT_R
R250 22K 5%
Q250B MMDT3904-7
R218 0R 5%
U200
A VCC
B Rext/Cext
CLR Cext
GND Q
SN74LVC1G123DCT
MR218 0R 5%
Q2_OUT
C253 10uF 6.3V
R201 1K 5%
BAV99
D222
HEADER IS 2MM
IT DOES NOT FOLLOW
2.54MM SPACING AS 4-PIN
PWM FAN SPECIFICATION
R228 10K 5% DNI
R229 10K 5%
+12V_EXT_A
R244 5.1K 5%
7,24
GPIO_6_TACH
R230 1K 1%
R231 1K 5%
Q203B MMDT3904-7
R235 3.83K 1%
FOR 4-WIRE FAN
FAN_PWM
TACH
FANOUT_P
J200
MALE
2.0MM
N/A
TOWS_TIN_BHEAD1X4_2MM
COMMON
VVVV341065
N32-1040AA1-H06
R241 20K 5% DNI
Q209 MMBT3906
R213 22K 5%
CTF_FAN
Q206 MMBT3904
R240 20K 5%
R233 20K 5%
R242 1K 5%
CTF_THERM
GPIO_18_CTF
R239 4.7K 5%
R238 47K 5%
CTF_TRIP
Q215 MMBT3904
C256 1uF 6.3V
R214 100K 5%
C210 1uF 6.3V
C255 1uF 6.3V
D200 BAT54KFILM
R222 0R 5%
CTF BYPASS
CTF_OUT
21
CYPRESS_PRO_HEATSINK HS2A
CYPRESS_PRO_HEATSINK HS2B
CYPRESS_PRO_HEATSINK HS2C
CYPRESS_PRO_HEATSINK HS2D
7120E87000G
Barts Pro Channel Fansink
MT211
MT212
SK1
ELLESMERE_L4_SLT_SOCKET
Mechanical Holes Symbol
MEC1 H_R220D125
MEC5 H_R220D125
MEC7 H_R220D125
MEC8 H_R220D125
MEC9 H_R220D125
MEC10 H_R220D125
MEC11 H_R220D125
MEC12 H_R220D125
MEC13 H_R220D125
MEC14 H_R220D125
MEC15 H_R220D125
DNI
GND
ASSY202 SCREW
7020003300G
SCREW203 SCREW
ASSY201 BRACKET DUAL
802005600G
DP, HDMI, Stacked-DVI
BRACKET MT HOLES
ASSY203 BRACKET DUAL
802005610G
DP, HDMI, Stacked-DVI W TAB
BKT1 BRACKET DUAL
802005610AG
J17 X_PIN1*2
J4006 X_PIN1*2
J11 impedence
J4007 impedence
FM1 OPT F_PAD_X
FM2 OPT F_PAD_X
FM3 OPT F_PAD_X
FM4 OPT F_PAD_X
FM5 OPT F_PAD_X
FM6 OPT F_PAD_X
FM7 OPT F_PAD_X
FM8 OPT F_PAD_X

TO PREVENT
FAN RUNNING
FULL SPEED AT
POWER UP

MEM DATA Signal end
DQD0_<31>
MEM to GPU : 0.13mm / 48ohm TOP

MEM DATA Signal end
DQA1_<17>
MEM to GPU : 0.11mm / 48ohm INT3

PETP15_GFXRP15
PETN15_GFXRN15
pex : trace width=0.114mm / 85ohm
Air Gap : 0.146mm TOP

CLKA1
CLKA1B
MEM :trace width=0.122mm/ 80ohm
Air Gap:0.128mm BOT

MICRO-STAR INT'L CO.,LTD		
MS-V341		
Size Custom	Document Description TABLE OF CONTENTS	Rev 1.0
Date: Tuesday, August 09, 2016	Sheet 23 of 26	

(21) DEBUG CIRCUITS

JTAG

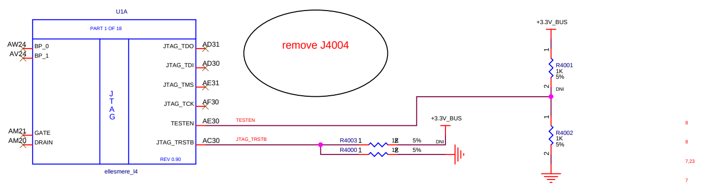
U1A
PART 1 OF 18
AW24
AV24
BP_0
BP_1
AM21
AM20
GATE
DRAIN
JTAG
JTAG_TDO
JTAG_TDI
JTAG_TMS
JTAG_TCK
TESTEN
JTAG_TRSTB
AD31
AD30
AE31
AF30
AE30
AC30
REV 0.90
ellesmere_l4
remove J4004
TESTEN
JTAG_TRSTB
+3.3V_BUS
R4003 1 1K 2 5%
R4000 1 1K 2 5%
DNI
+3.3V_BUS
R4001 1K 5%
DNI
R4002 1K 5%
8
8
7,23
7

E-FUSE CAPABILITY

DEFAULT = GPIO-CONTROLLED
(MANUAL OPTION AS BACK-UP)

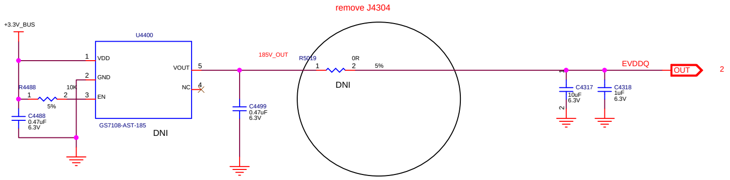
+3.3V_BUS
U4400
VDD
GND
EN
VOUT
NC
GS7108-AST-185
DNI
R4488 10K 5%
C4488 0.47uF 6.3V
185V_OUT
C4499 0.47uF 6.3V
remove J4304
R5019 0R 5%
DNI
C4317 10uF 6.3V
C4318 1uF 6.3V
EVDDQ
OUT
2

DIGITAL POTS

remove U4150 / U4050

DIGITAL POTS

remove J4001/J4002

SWITCHES

remove SW

BYPASS/DISABLE CTF

MAXIMIZE FAN

LM96163 FOR BACKUP THERMAL CONTROL

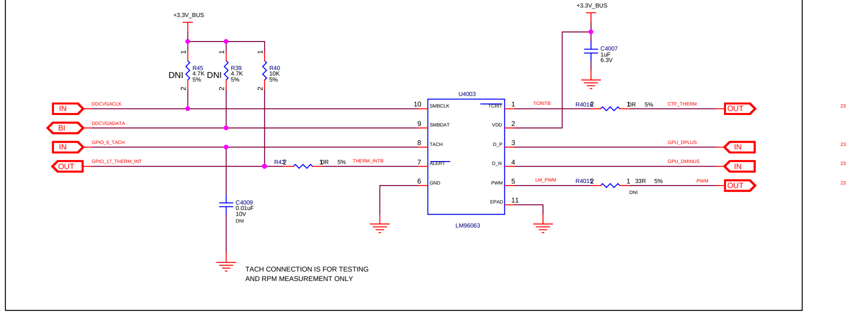
+3.3V_BUS
R45 4.7K 5%
DNI
R39 4.7K 5%
DNI
R40 10K 5%
IN
DDCVGACLK
BI
DDCVGADATA
IN
GPIO_6_TACH
OUT
GPIO_17_THERM_INT
R43 0R 5%
THERM_INTB
C4009 0.01uF 10V DNI
U4003
SMBCLK
SMBDAT
TACH
ALERT
GND
TCRIT
VDD
D_P
D_N
PWM
EPAD
LM96063
+3.3V_BUS
C4007 1uF 6.3V
TCRITB
R4016 0R 5%
CTF_THERM
OUT
GPU_DPLUS
IN
GPU_DMINUS
IN
LM_PWM
R4015 33R 5%
DNI
PWM
OUT
23
23
23
23

TACH CONNECTION IS FOR TESTING
AND RPM MEASUREMENT ONLY

LED LIGHTS

LED RED "ON" INDICATES CTF FAULT

remove LED

LED GREEN "ON" INDICATES BACO MODE

LED ORANGE "ON" INDICATES MACO MODE

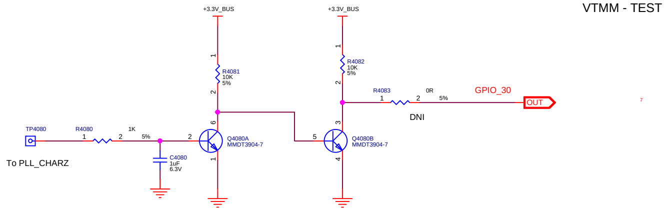
+3.3V_BUS
+3.3V_BUS
R4081 10K 5%
R4082 10K 5%
TP4080
R4080 1K 5%
C4080 1uF 6.3V
Q4080A MMDT3904-7
Q4080B MMDT3904-7
R4083 0R 5%
DNI
GPIO_30
OUT
7

To PLL_CHARZ

VTMM - TEST CONNECTOR FOR VOLTAGE MEASUREMENTS

remove 10pin connector

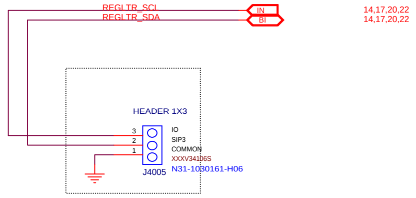
REGLTR_SCL
REGLTR_SDA
IN
BI
14,17,20,22
14,17,20,22
HEADER 1X3
IO
SIP3
COMMON
XXXV34106S
N31-1030161-H06
J4005

MSI

MICRO-STAR INT'L CO.,LTD

MS-V341

Size	Document Description	Rev
Custom	TABLE OF CONTENTS	1.0

Date: Tuesday, August 09, 2016 | Sheet 24 of 26

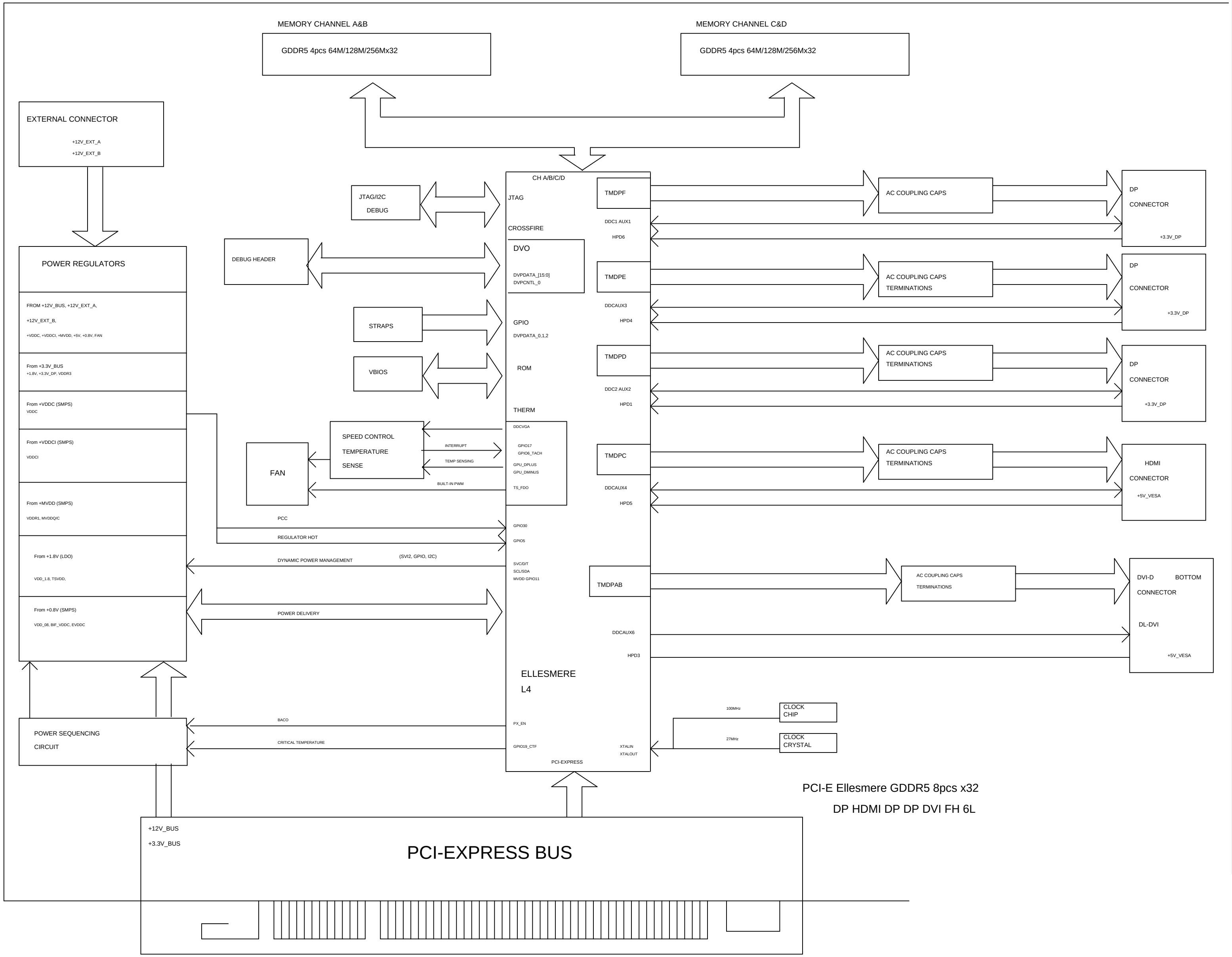
MEMORY CHANNEL A&B
GDDR5 4pcs 64M/128M/256Mx32
MEMORY CHANNEL C&D
GDDR5 4pcs 64M/128M/256Mx32
EXTERNAL CONNECTOR
+12V_EXT_A
+12V_EXT_B
POWER REGULATORS
FROM +12V_BUS, +12V_EXT_A,
+12V_EXT_B,
+VDDC, +VDDCI, +MVDD, +5V, +0.8V, FAN
From +3.3V_BUS
+1.8V, +3.3V_DP, VDDR3
From +VDDC (SMPS)
VDDC
From +VDDCI (SMPS)
VDDCI
From +MVDD (SMPS)
VDDR1, MVDDQ/C
From +1.8V (LDO)
VDD_1.8, TSVDD,
From +0.8V (SMPS)
VDD_08, BIF_VDDC, EVDDC
POWER SEQUENCING
CIRCUIT
JTAG/I2C
DEBUG
DEBUG HEADER
STRAPS
VBIOS
SPEED CONTROL
TEMPERATURE
SENSE
FAN
INTERRUPT
TEMP SENSING
BUILT-IN PWM
PCC
REGULATOR HOT
DYNAMIC POWER MANAGEMENT
(SVI2, GPIO, I2C)
POWER DELIVERY
BACO
CRITICAL TEMPERATURE
CH A/B/C/D
JTAG
CROSSFIRE
DVO
DVPDATA_[15:0]
DVPCNTL_0
GPIO
DVPDATA_0,1,2
ROM
THERM
DDCVGA
GPIO17
GPIO6_TACH
GPU_DPLUS
GPU_DMINUS
TS_FDO
GPIO30
GPIO5
SVC/D/T
SCL/SDA
MVDD GPIO11
ELLESMERE
L4
PX_EN
GPIO19_CTF
XTALIN
XTALOUT
PCI-EXPRESS
TMDPF
DDC1 AUX1
HPD6
TMDPE
DDCAUX3
HPD4
TMDPD
DDC2 AUX2
HPD1
TMDPC
DDCAUX4
HPD5
TMDPAB
DDCAUX6
HPD3
AC COUPLING CAPS
AC COUPLING CAPS
TERMINATIONS
AC COUPLING CAPS
TERMINATIONS
AC COUPLING CAPS
TERMINATIONS
AC COUPLING CAPS
TERMINATIONS
DP
CONNECTOR
+3.3V_DP
DP
CONNECTOR
+3.3V_DP
DP
CONNECTOR
+3.3V_DP
HDMI
CONNECTOR
+5V_VESA
DVI-D
BOTTOM
CONNECTOR
DL-DVI
+5V_VESA
100MHz
CLOCK
CHIP
27MHz
CLOCK
CRYSTAL
+12V_BUS
+3.3V_BUS
PCI-EXPRESS BUS

PCI-E Ellesmere GDDR5 8pcs x32

DP HDMI DP DP DVI FH 6L

MICRO-STAR INT'L CO.,LTD

MS-V341

Size Custom
Document Description TABLE OF CONTENTS
Rev 1.0
Date: Tuesday, August 09, 2016
Sheet 25 of 26

0	00A	08/28/2015	
1	00B	10/19/2015	1. Add GPIO1 for dynamic VDDCI 2. update VDDC driver sequence
2	00C	03/23/2016	HDMI: - add series resistor R1880 ~R1887 - add pull down inductor L1880 ~L1887 remove C405, C403, VR400,C410,C414,R405

Page7: remove J2,J3

Page9: enable DVI

Page10: DP change to HDMI

Page15: change dual-N MOS

Page16: change dual-N MOS

Page18: change dual-N MOS

Page20: Add LED circuit

Page21: colay 8pin power connecter

Page24: remove debug circuit

MICRO-STAR INT'L CO.,LTD

MS-V341

Size Custom	Document Description TABLE OF CONTENTS	Rev 1.0
Date: Tuesday, August 09, 2016	Sheet 26 of 26	