P2030

GK106, 2GB GDDR5, 192b mixed mode x16, x32

Stacked DVI-I/DVI-D + HDMI/DP + DP

TABLE OF CONTENTS

Page	Description
1	Table of Contents
2	PCI Express
3	MEMORY: GPU Partition A/B
4	MEMORY: FBA[31:0]
5	MEMORY: FBA[63:32]
6	MEMORY: FBB[31:0]
7	MEMORY: FBB[63:32]
8	MEMORY: GPU Partition C
9	MEMORY: FBC[31:0]
10	MEMORY: FBC[63:32]
11	MEMORY: DECAP
12	GPU PWR and GND
13	GPU Decoupling
14	DACA Interface
15	IFPAB DVI-I-DL
16	IFPEF DVI-D-DL
17	IFPC HDMI/DP
18	IFPD DP
19	MIOA/SLI/Stereo Hdr Interface
20	MISC1: Fan, Thermal, JTAG, GPIO
21	MISC2: ROM, XTAL, Straps
22	PS: 5V, PEX_VDD
23	PS: FBVDDQ
24	PS: NVVDD VID and PSI
25	PS: NVVDD Supply
26	PS: NVVDD Phase4
27	PS: Inputs, Filtering, and Monitoring
28	PS: Shutdown
29	PS: Board LED; Lighted SLI LED
30	MECH: Bracket/Thermal

SKU	VARIANT	NVPN	ASSEMBLY
B	BASE	600-12030-BASE-000	BASE LEVEL GENERIC SCHEMATIC ONLY, COMMON & NO_STUFF ASSEMBLY NOTES AND BOM NOT FINAL
1	SKU0000	600-12030-0000-000	GK106-400, 2048MB, GDDR5 192b Stacked DVI-I DL/DVI-D DL, HDMI, DP
2	SKU0010	600-12030-0010-000	GK106-250, 2048MB, GDDR5, 192b Stacked DVI-I DL/DVI-D, HDMI, DP
3	SKU0050	600-12030-0050-000	GK106-200, 2048MB, GDDR5, 128b Stacked DVI-I DL/DVI-D, HDMI, DP
4	SKU0500	600-52030-0500-000	GK106-875, 3072MB, GDDR5, 192b DVI-I, DP, DP Workstation
5	<UNDEFINED>	<UNDEFINED>	<UNDEFINED>
6	<UNDEFINED>	<UNDEFINED>	<UNDEFINED>
7	<UNDEFINED>	<UNDEFINED>	<UNDEFINED>
8	<UNDEFINED>	<UNDEFINED>	<UNDEFINED>
9	<UNDEFINED>	<UNDEFINED>	<UNDEFINED>
10	<UNDEFINED>	<UNDEFINED>	<UNDEFINED>
11	<UNDEFINED>	<UNDEFINED>	<UNDEFINED>
12	<UNDEFINED>	<UNDEFINED>	<UNDEFINED>
13	<UNDEFINED>	<UNDEFINED>	<UNDEFINED>
14	<UNDEFINED>	<UNDEFINED>	<UNDEFINED>
15	<UNDEFINED>	<UNDEFINED>	<UNDEFINED>

Gigabyte Confidential
Do Not Copy

GIGABYTE		
Title: Table of Contents		
Size: Custom	Document Number: GV-N660WF2-2GD	Rev: 1.0
Date: Wednesday, October 24, 2012	Sheet 1 of 31	

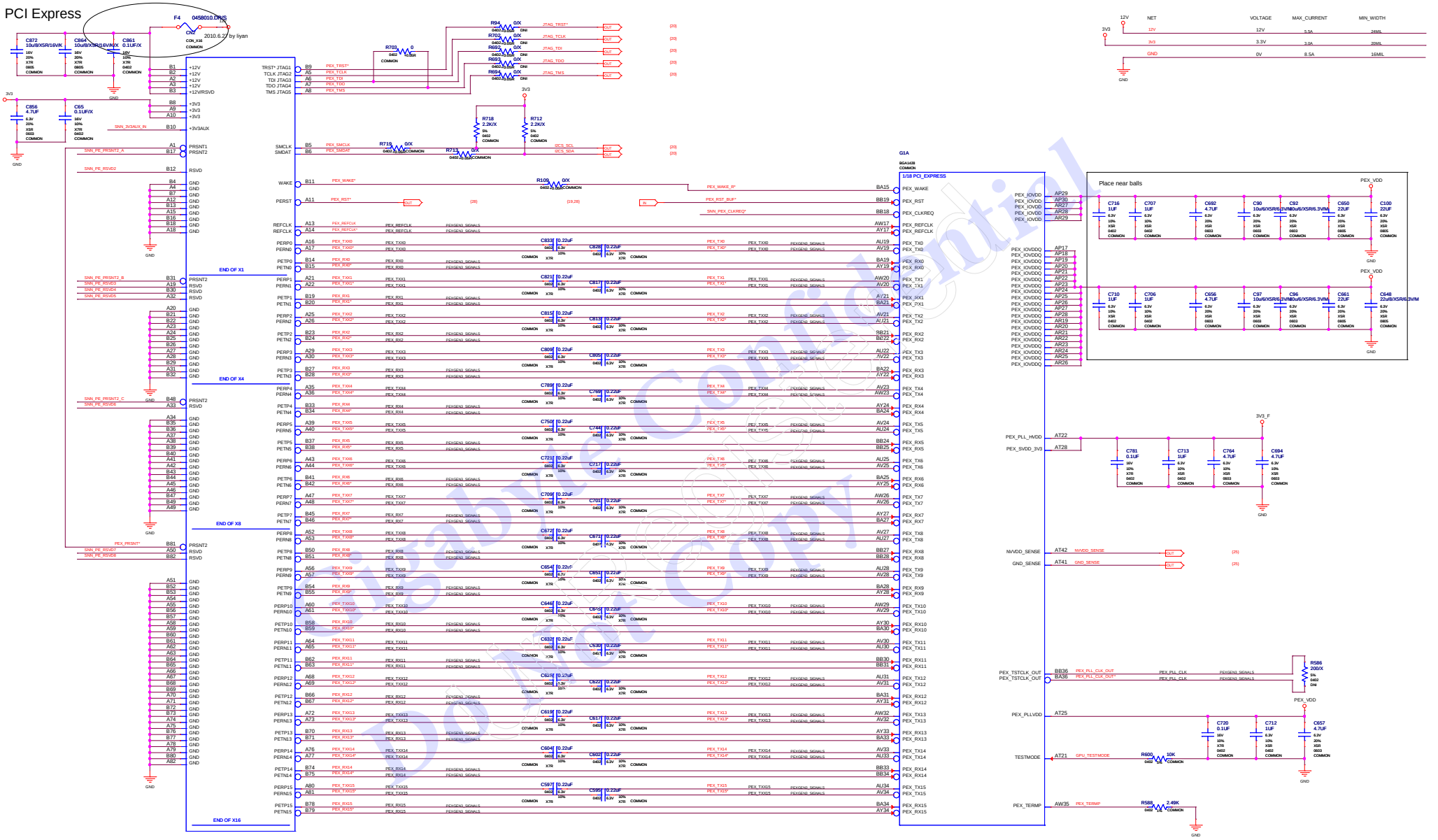

ALL NVIDIA DESIGN SPECIFICATIONS, REFERENCE SPECIFICATIONS, REFERENCE BOARDS, FILES, DRAWINGS, DIAGNOSTICS, LISTS AND OTHER DOCUMENTS OR INFORMATION (TOGETHER AND SEPARATELY, 'MATERIALS') ARE BEING PROVIDED 'AS IS'. THE MATERIALS MAY CONTAIN KNOWN AND UNKNOWN VIOLATIONS OR DEVIATIONS OF INDUSTRY STANDARDS AND SPECIFICATIONS. NVIDIA MAKES NO WARRANTIES, EXPRESSED, IMPLIED, STATUTORY OR OTHERWISE WITH RESPECT TO THE MATERIALS OR OTHERWISE, AND EXPRESSLY DISCLAIMS ALL IMPLIED WARRANTIES INCLUDING, WITHOUT LIMITATION, THE WARRANTIES OF DESIGN, OF NONINFRINGEMENT, MERCHANTABILITY OR FITNESS FOR A PARTICULAR PURPOSE, OR ARISING FROM A COURSE OF DEALING, TRADE USAGE, TRADE PRACTICE, OR INDUSTRY STANDARDS.

Gigabyte Confidential
Do not Copy

MEMORY: GPU Partition A/B

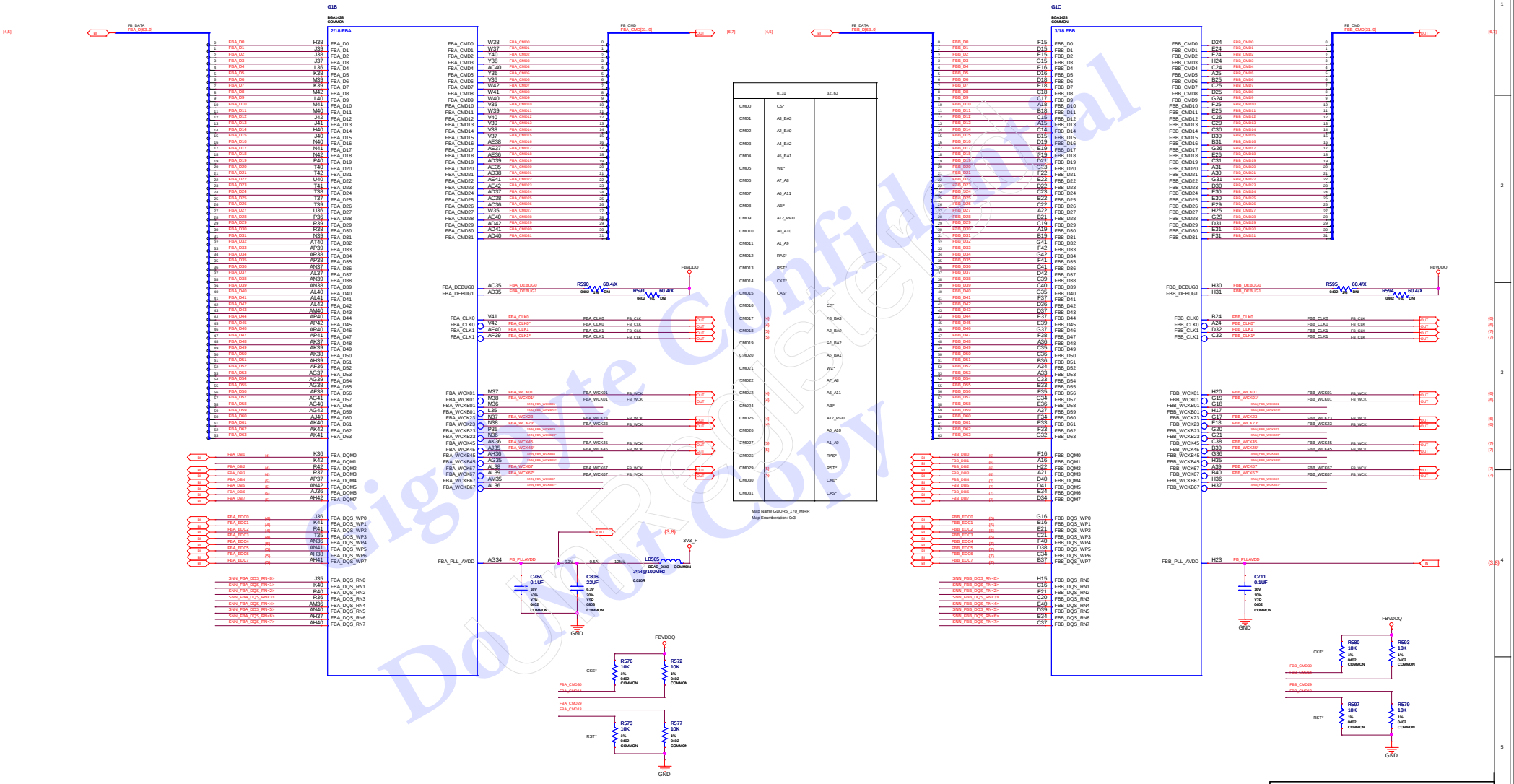

ASSEMBLY
PAGE DETAIL

BASE LEVEL GENERIC SCHEMATIC ONLY
MEMORY: GPU Partition A/B

ALL NVIDIA DESIGN SPECIFICATIONS, REFERENCE SPECIFICATIONS, REFERENCE BOARDS, FILES, DRAWINGS, DIAGNOSTICS, LISTS AND OTHER DOCUMENTS OR INFORMATION (TOGETHER AND SEPARATELY, 'MATERIALS') ARE BEING PROVIDED 'AS IS'. THE MATERIALS MAY CONTAIN KNOWN AND UNKNOWN VIOLATIONS OR DEVIATIONS OF INDUSTRY STANDARDS AND SPECIFICATIONS. NVIDIA MAKES NO WARRANTIES, EXPRESSED, IMPLIED, STATUTORY OR OTHERWISE WITH RESPECT TO THE MATERIALS OR OTHERWISE, AND EXPRESSLY DISCLAIMS ALL IMPLIED WARRANTIES INCLUDING, WITHOUT LIMITATION, THE WARRANTIES OF DESIGN, OF NONINFRINGEMENT, MERCHANTABILITY OR FITNESS FOR A PARTICULAR PURPOSE, OR ARISING FROM A COURSE OF DEALING, TRADE USAGE, TRADE PRACTICE, OR INDUSTRY STANDARDS.

Digital Confidential
Do Not Copy

GIGABYTE

Title: Table of Contents

Size: Custom | Document Number: GV-N660WF2-2GD | Rev: 1.0

Date: Wednesday, October 24, 2012 | Sheet 3 of 31

MEMORY: FBA Partition 31..0

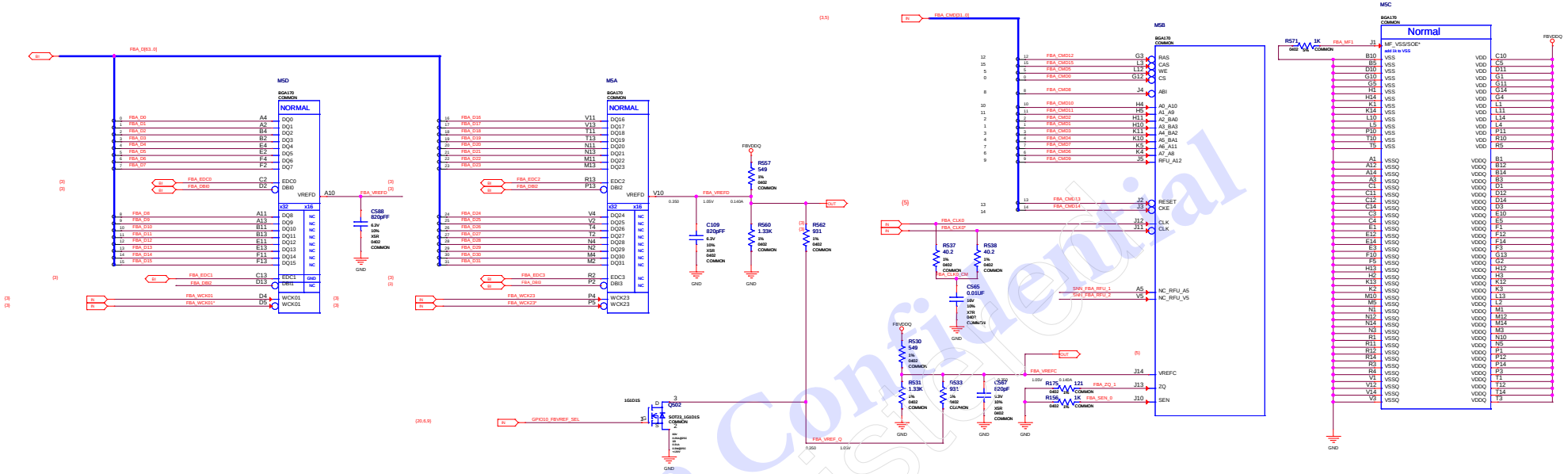

Gigabyte Confidential
Do Not Copy

ASSEMBLY	BASE LEVEL GENERIC SCHEMATIC ONLY
PAGE DETAIL	MEMORY: FBA[31:0]

ALL NVIDIA DESIGN SPECIFICATIONS, REFERENCE SPECIFICATIONS, REFERENCE BOARDS, FILES, DRAWINGS, DIAGNOSTICS, LISTS AND OTHER DOCUMENTS OR INFORMATION (TOGETHER AND SEPARATELY, 'MATERIALS') ARE BEING PROVIDED 'AS IS'. THE MATERIALS MAY CONTAIN KNOWN AND UNKNOWN VIOLATIONS OR DEVIATIONS OF INDUSTRY STANDARDS AND SPECIFICATIONS. NVIDIA MAKES NO WARRANTIES, EXPRESSED, IMPLIED, STATUTORY OR OTHERWISE WITH RESPECT TO THE MATERIALS OR OTHERWISE, AND EXPRESSLY DISCLAIMS ALL IMPLIED WARRANTIES INCLUDING, WITHOUT LIMITATION, THE WARRANTIES OF DESIGN, OF NONINFRINGEMENT, MERCHANTABILITY OR FITNESS FOR A PARTICULAR PURPOSE, OR ARISING FROM A COURSE OF DEALING, TRADE USAGE, TRADE PRACTICE, OR INDUSTRY STANDARDS.

GIGABYTE

Title: Table of Contents

Size	Document Number	Rev
Custom	GV-N660WF2-2GD	1.0

Date: Wednesday, October 24, 2012 Sheet 4 of 31

MEMORY: FBA Partition 63..32

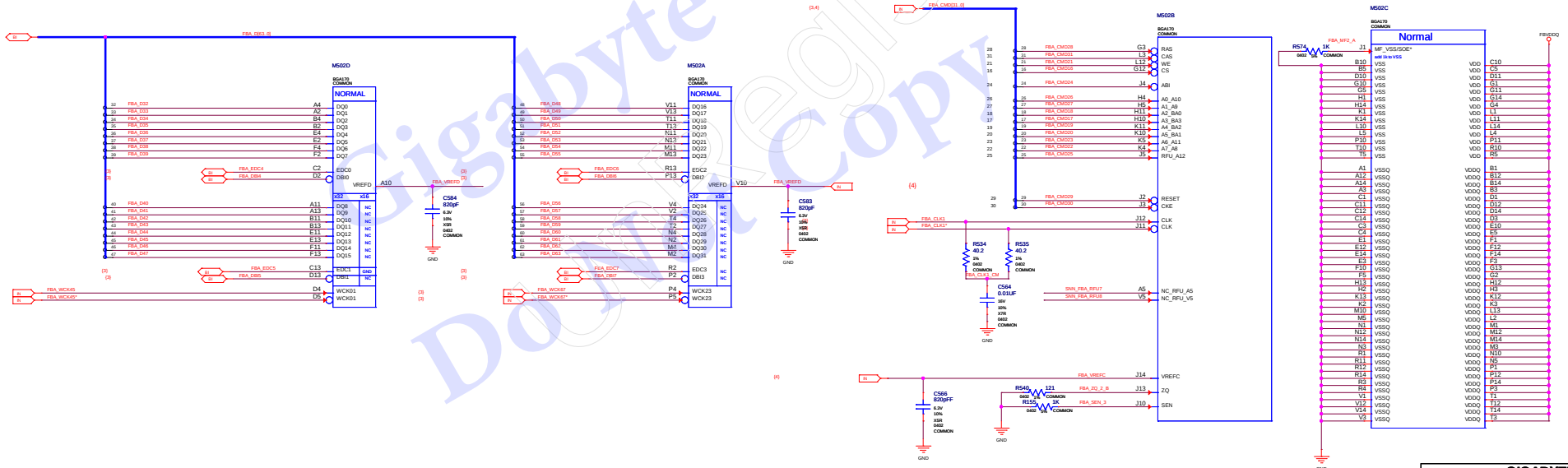

ASSEMBLY
PAGE DETAIL

BASE LEVEL GENERIC SCHEMATIC ONLY
MEMORY: FBA[63:32]

ALL NVIDIA DESIGN SPECIFICATIONS, REFERENCE SPECIFICATIONS, REFERENCE BOARDS, FILES, DRAWINGS, DIAGNOSTICS, LISTS AND OTHER DOCUMENTS OR INFORMATION (TOGETHER AND SEPARATELY, 'MATERIALS') ARE BEING PROVIDED 'AS IS'. THE MATERIALS MAY CONTAIN KNOWN AND UNKNOWN VIOLATIONS OR DEVIATIONS OF INDUSTRY STANDARDS AND SPECIFICATIONS. NVIDIA MAKES NO WARRANTIES, EXPRESSED, IMPLIED, STATUTORY OR OTHERWISE WITH RESPECT TO THE MATERIALS OR OTHERWISE, AND EXPRESSLY DISCLAIMS ALL IMPLIED WARRANTIES INCLUDING, WITHOUT LIMITATION, THE WARRANTIES OF DESIGN, OF NONINFRINGEMENT, MERCHANTABILITY OR FITNESS FOR A PARTICULAR PURPOSE, OR ARISING FROM A COURSE OF DEALING, TRADE USAGE, TRADE PRACTICE, OR INDUSTRY STANDARDS.

GIGABYTE

Title: Table of Contents

Size	Document Number	Rev
Custom	GV-N660WF2-2GD	1.0

Date: Wednesday, October 24, 2012 Sheet 5 of 31

Gigabyte Confidential
Do not Copy
Registered

MEMORY: FBB Partition 31..0

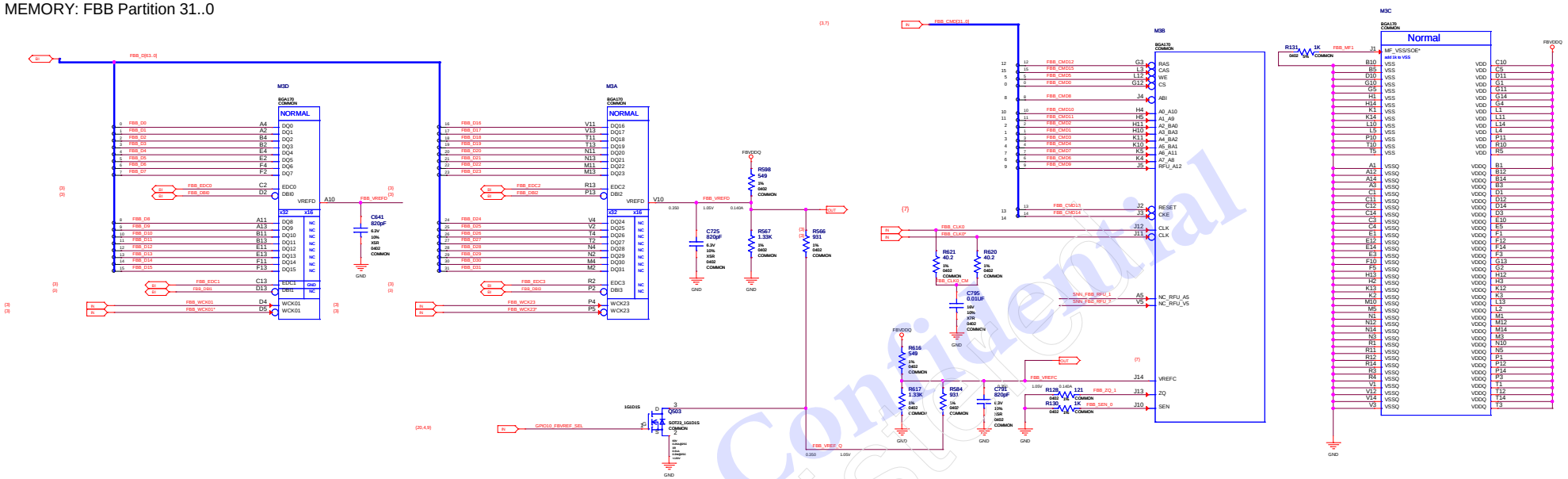

Gigabyte Confidential
Do Not Copy

ASSEMBLY
PAGE DETAIL

BASE LEVEL GENERIC SCHEMATIC ONLY
MEMORY: FBB[31:0]

ALL NVIDIA DESIGN SPECIFICATIONS, REFERENCE SPECIFICATIONS, REFERENCE BOARDS, FILES, DRAWINGS, DIAGNOSTICS, LISTS AND OTHER DOCUMENTS OR INFORMATION (TOGETHER AND SEPARATELY, "MATERIALS") ARE BEING PROVIDED "AS IS". THE MATERIALS MAY CONTAIN KNOWN AND UNKNOWN VIOLATIONS OR DEVIATIONS OF INDUSTRY STANDARDS AND SPECIFICATIONS. NVIDIA MAKES NO WARRANTIES, EXPRESSED, IMPLIED, STATUTORY OR OTHERWISE WITH RESPECT TO THE MATERIALS OR OTHERWISE, AND EXPRESSLY DISCLAIMS ALL IMPLIED WARRANTIES INCLUDING, WITHOUT LIMITATION, THE WARRANTIES OF DESIGN, OF NONINFRINGEMENT, MERCHANTABILITY OR FITNESS FOR A PARTICULAR PURPOSE, OR ARISING FROM A COURSE OF DEALING, TRADE USAGE, TRADE PRACTICE, OR INDUSTRY STANDARDS.

GIGABYTE

Title: Table of Contents

Size	Document Number	Rev
Custom	GV-N660WF2-2GD	1.0

Date: Wednesday, October 24, 2012 Sheet 6 of 31

MEMORY: FBB Partition 63..32

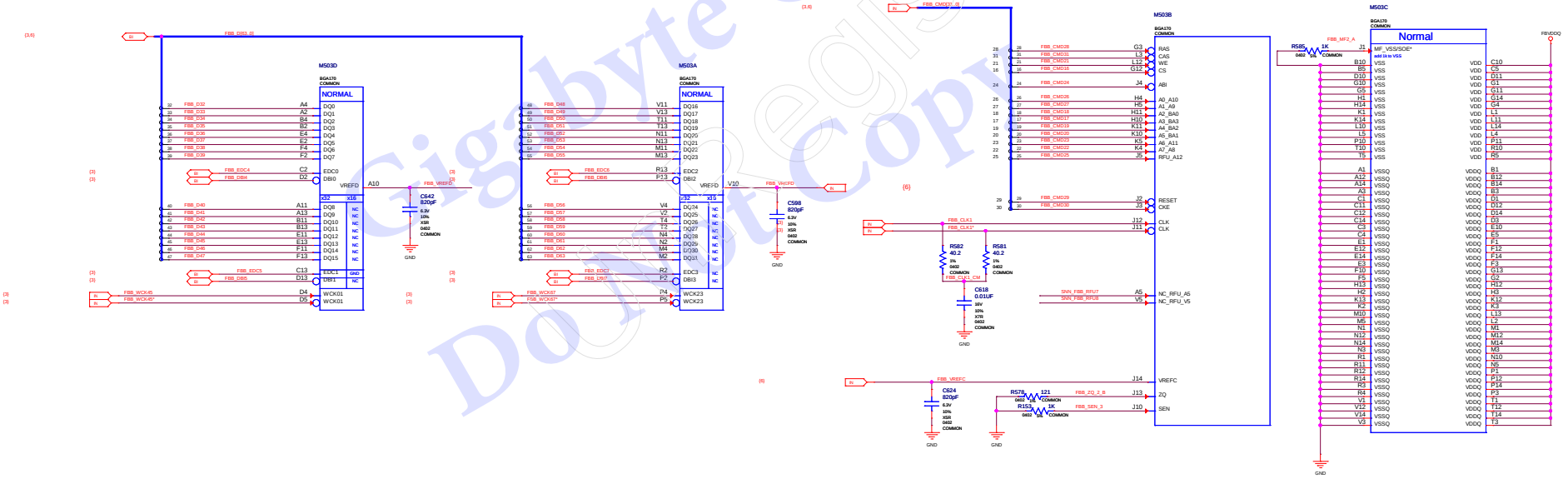

Gigabyte Confidential
Do Not Copy
Registered

ASSEMBLY
PAGE DETAIL

BASE LEVEL GENERIC SCHEMATIC ONLY
MEMORY: FBB[63:32]

ALL NVIDIA DESIGN SPECIFICATIONS, REFERENCE SPECIFICATIONS, REFERENCE BOARDS, FILES, DRAWINGS, DIAGNOSTICS, LISTS AND OTHER DOCUMENTS OR INFORMATION (TOGETHER AND SEPARATELY, "MATERIALS") ARE BEING PROVIDED 'AS IS'. THE MATERIALS MAY CONTAIN KNOWN AND UNKNOWN VIOLATIONS OR DEVIATIONS OF INDUSTRY STANDARDS AND SPECIFICATIONS. NVIDIA MAKES NO WARRANTIES, EXPRESSED, IMPLIED, STATUTORY OR OTHERWISE WITH RESPECT TO THE MATERIALS OR OTHERWISE, AND EXPRESSLY DISCLAIMS ALL IMPLIED WARRANTIES INCLUDING, WITHOUT LIMITATION, THE WARRANTIES OF DESIGN, OF NONINFRINGEMENT, MERCHANTABILITY OR FITNESS FOR A PARTICULAR PURPOSE, OR ARISING FROM A COURSE OF DEALING, TRADE USAGE, TRADE PRACTICE, OR INDUSTRY STANDARDS.

GIGABYTE

Title: Table of Contents

Size	Document Number	Rev
Custom	GV-N660WF2-2GD	1.0

Date: Thursday, October 25, 2012 Sheet 7 of 31

MEMORY: GPU Partition C

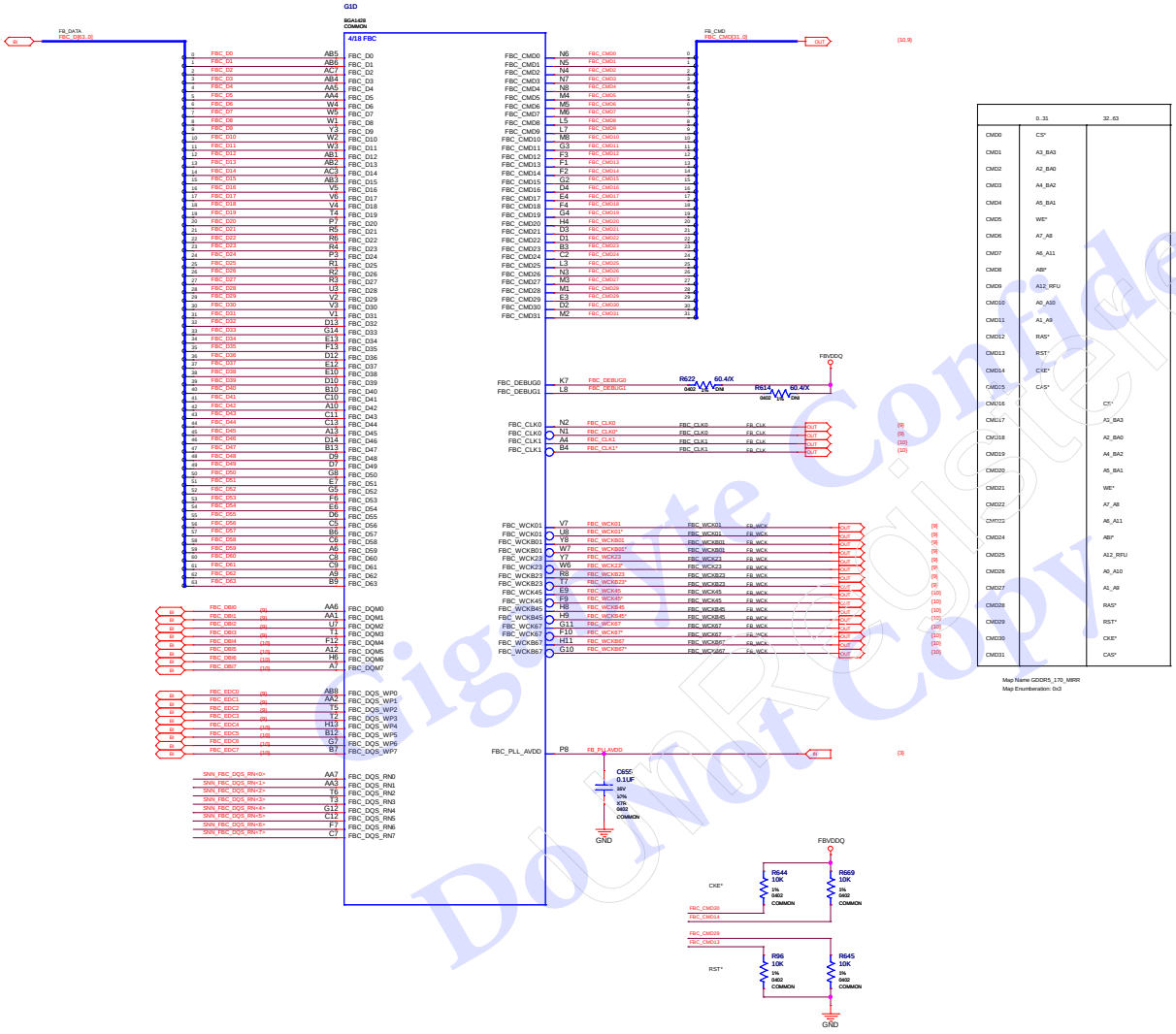

Gigabyte Confidential
Do Not Copy

ASSEMBLY
PAGE DETAIL

BASE LEVEL GENERIC SCHEMATIC ONLY
MEMORY: GPU Partition C

ALL NVIDIA DESIGN SPECIFICATIONS, REFERENCE SPECIFICATIONS, REFERENCE BOARDS, FILES, DRAWINGS, DIAGNOSTICS, LISTS AND OTHER DOCUMENTS OR INFORMATION (TOGETHER AND SEPARATELY, "MATERIALS") ARE BEING PROVIDED "AS IS". THE MATERIALS MAY CONTAIN KNOWN AND UNKNOWN VIOLATIONS OR DEVIATIONS OF INDUSTRY STANDARDS AND SPECIFICATIONS. NVIDIA MAKES NO WARRANTIES, EXPRESSED, IMPLIED, STATUTORY OR OTHERWISE WITH RESPECT TO THE MATERIALS OR OTHERWISE, AND EXPRESSLY DISCLAIMS ALL IMPLIED WARRANTIES INCLUDING, WITHOUT LIMITATION, THE WARRANTIES OF DESIGN, OF NONINFRINGEMENT, MERCHANTABILITY OR FITNESS FOR A PARTICULAR PURPOSE, OR ARISING FROM A COURSE OF DEALING, TRADE USAGE, TRADE PRACTICE, OR INDUSTRY STANDARDS.

GIGABYTE

Title: Table of Contents

Size	Document Number	Rev
Custom	GV-N660WF2-2GD	1.0

Date: Wednesday, October 24, 2012 Sheet 8 of 31

MEMORY: FBC Partition 31..0

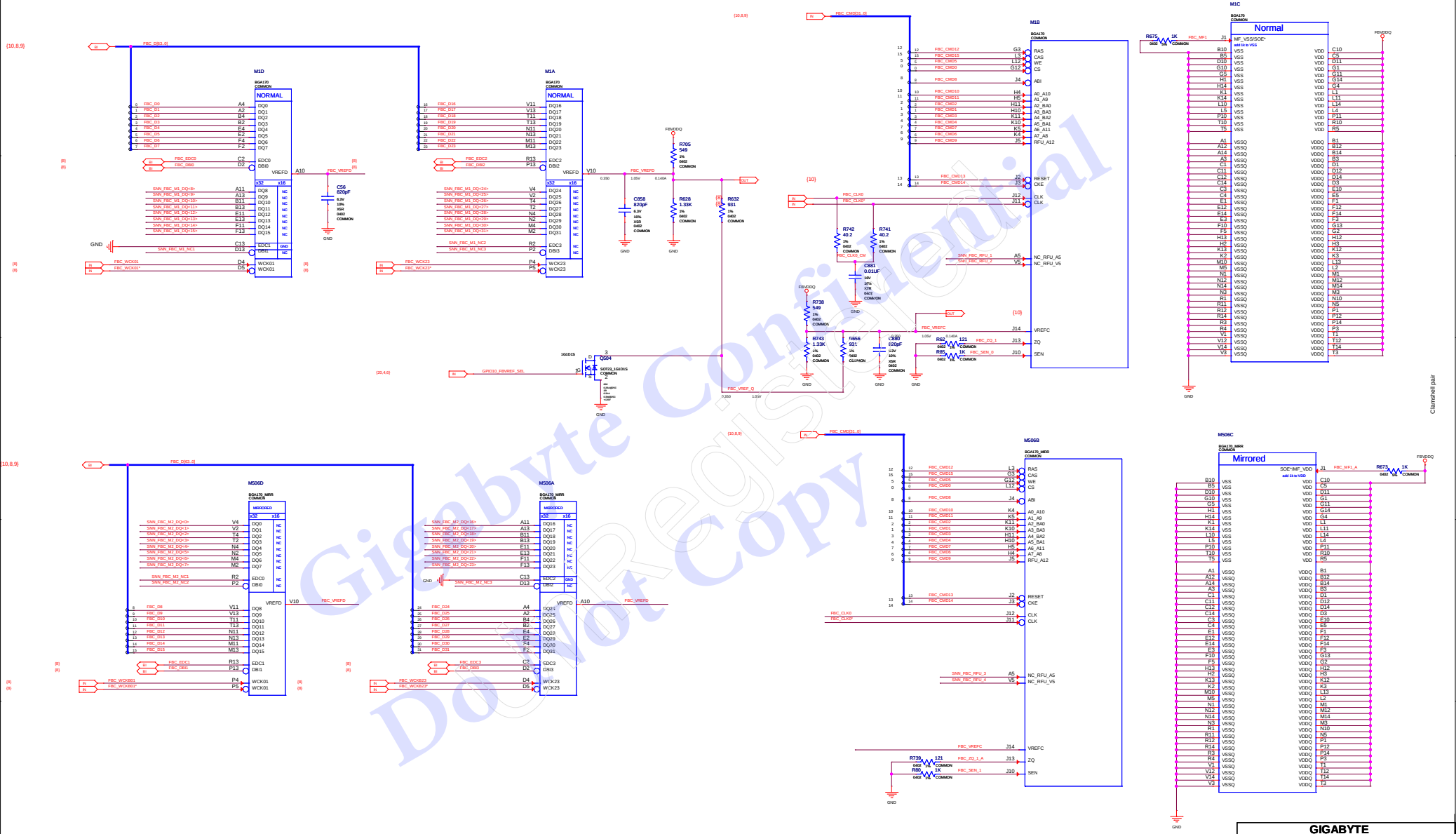

Gigabyte Confidential
Do not Copy

ASSEMBLY
PAGE DETAIL

BASE LEVEL GENERIC SCHEMATIC ONLY
MEMORY: FBC[31:0]

ALL NVIDIA DESIGN SPECIFICATIONS, REFERENCE SPECIFICATIONS, REFERENCE BOARDS, FILES, DRAWINGS, DIAGNOSTICS, LISTS AND OTHER DOCUMENTS OR INFORMATION (TOGETHER AND SEPARATELY, "MATERIALS") ARE BEING PROVIDED "AS IS". THE MATERIALS MAY CONTAIN KNOWN AND UNKNOWN VIOLATIONS OR DEVIATIONS OF INDUSTRY STANDARDS AND SPECIFICATIONS. NVIDIA MAKES NO WARRANTIES, EXPRESSED, IMPLIED, STATUTORY OR OTHERWISE WITH RESPECT TO THE MATERIALS OR OTHERWISE, AND EXPRESSLY DISCLAIMS ALL IMPLIED WARRANTIES INCLUDING, WITHOUT LIMITATION, THE WARRANTIES OF DESIGN, OF NONINFRINGEMENT, MERCHANTABILITY OR FITNESS FOR A PARTICULAR PURPOSE, OR ARISING FROM A COURSE OF DEALING, TRADE USAGE, TRADE PRACTICE, OR INDUSTRY STANDARDS.

GIGABYTE

Title: Table of Contents

Size	Document Number	Rev
Custom	GV-N660WF2-2GD	1.0

Date: Wednesday, October 24, 2012 Sheet 5 of 31

MEMORY: FBC Partition 63..32

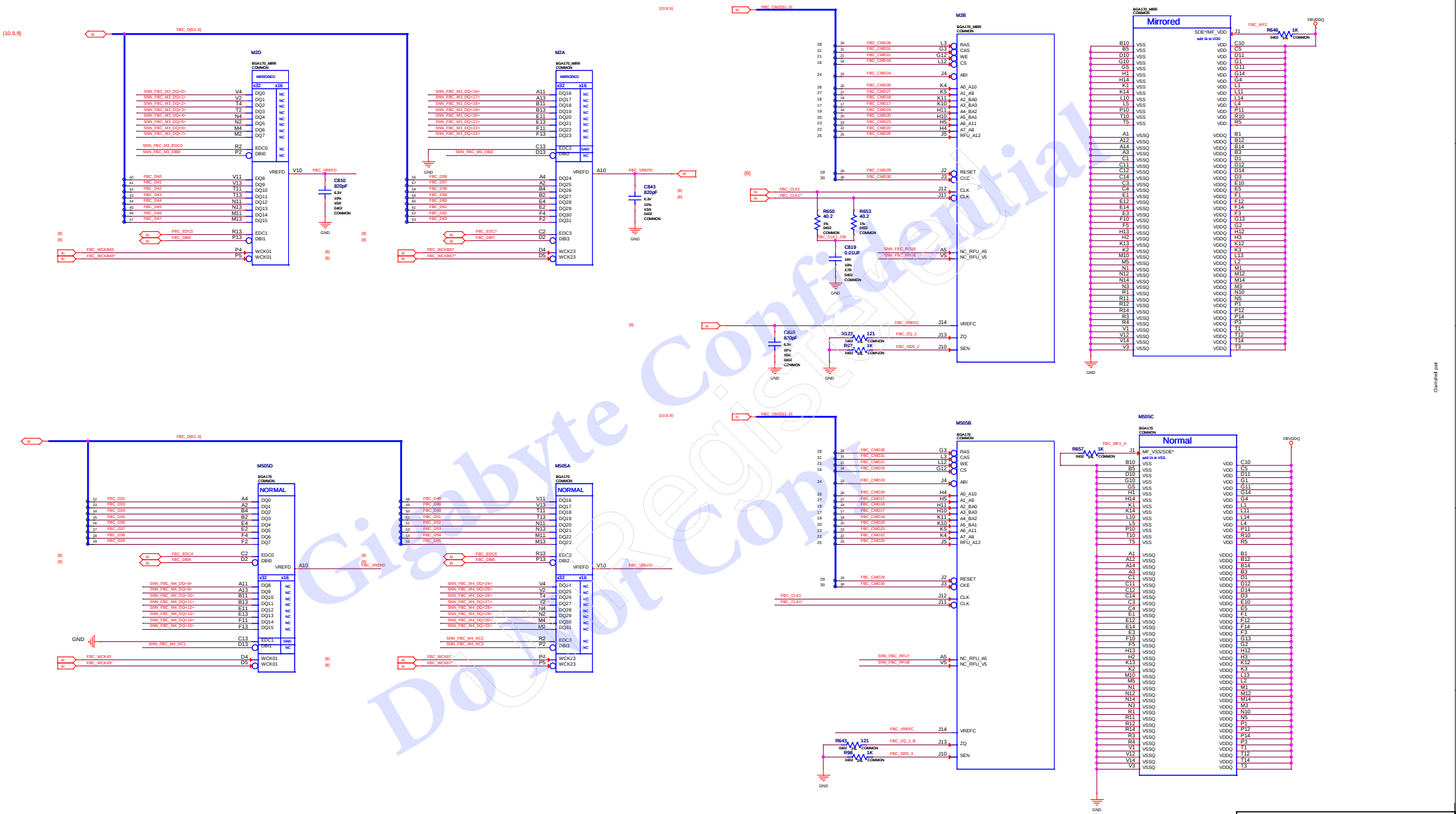

Gigabyte Confidential
Do not Copy

ASSEMBLY
PAGE DETAIL

BASE LEVEL GENERIC SCHEMATIC ONLY
MEMORY: FBC[63:32]

ALL NVIDIA DESIGN SPECIFICATIONS, REFERENCE SPECIFICATIONS, REFERENCE BOARDS, FILES, DRAWINGS, DIAGNOSTICS, LISTS AND OTHER DOCUMENTS OR INFORMATION (TOGETHER AND SEPARATELY, "MATERIALS") ARE BEING PROVIDED "AS IS". THE MATERIALS MAY CONTAIN KNOWN AND UNKNOWN VIOLATIONS OR DEVIATIONS OF INDUSTRY STANDARDS AND SPECIFICATIONS. NVIDIA MAKES NO WARRANTIES, EXPRESSED, IMPLIED, STATUTORY OR OTHERWISE WITH RESPECT TO THE MATERIALS OR OTHERWISE, AND EXPRESSLY DISCLAIMS ALL IMPLIED WARRANTIES INCLUDING, WITHOUT LIMITATION, THE WARRANTIES OF DESIGN, OF NONINFRINGEMENT, MERCHANTABILITY OR FITNESS FOR A PARTICULAR PURPOSE, OR ARISING FROM A COURSE OF DEALING, TRADE USAGE, TRADE PRACTICE, OR INDUSTRY STANDARDS.

GIGABYTE

Title: Table of Contents

Size	Document Number	Rev
Custom	GV-N660WF2-2GD	1.0

Date: Wednesday, October 24, 2012 Sheet 10 of 31

MEMORY: DECAP

FBA

FBB

FBC

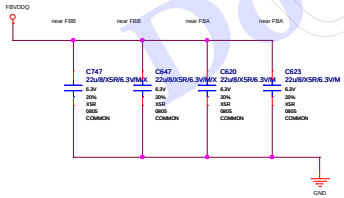

ASSEMBLY
PAGE DETAIL

BASE LEVEL GENERIC SCHEMATIC ONLY
MEMORY: DECAP

ALL NVIDIA DESIGN SPECIFICATIONS, REFERENCE SPECIFICATIONS, REFERENCE BOARDS, FILES, DRAWINGS, DIAGNOSTICS, LISTS AND OTHER DOCUMENTS OR INFORMATION (TOGETHER AND SEPARATELY, 'MATERIALS') ARE BEING PROVIDED 'AS IS'. THE MATERIALS MAY CONTAIN KNOWN AND UNKNOWN VIOLATIONS OR DEVIATIONS OF INDUSTRY STANDARDS AND SPECIFICATIONS. NVIDIA MAKES NO WARRANTIES, EXPRESSED, IMPLIED, STATUTORY OR OTHERWISE WITH RESPECT TO THE MATERIALS OR OTHERWISE, AND EXPRESSLY DISCLAIMS ALL IMPLIED WARRANTIES INCLUDING, WITHOUT LIMITATION, THE WARRANTIES OF DESIGN, OF NONINFRINGEMENT, MERCHANTABILITY OR FITNESS FOR A PARTICULAR PURPOSE, OR ARISING FROM A COURSE OF DEALING, TRADE USAGE, TRADE PRACTICE, OR INDUSTRY STANDARDS.

GIGABYTE

Title: Table of Contents

Size	Document Number	Rev
Custom	GV-N660WF2-2GD	1.0

Date: Wednesday, October 24, 2012 Sheet 11 of 31

Gigabyte Confidential
Do Not Copy

GPU PWR and GND

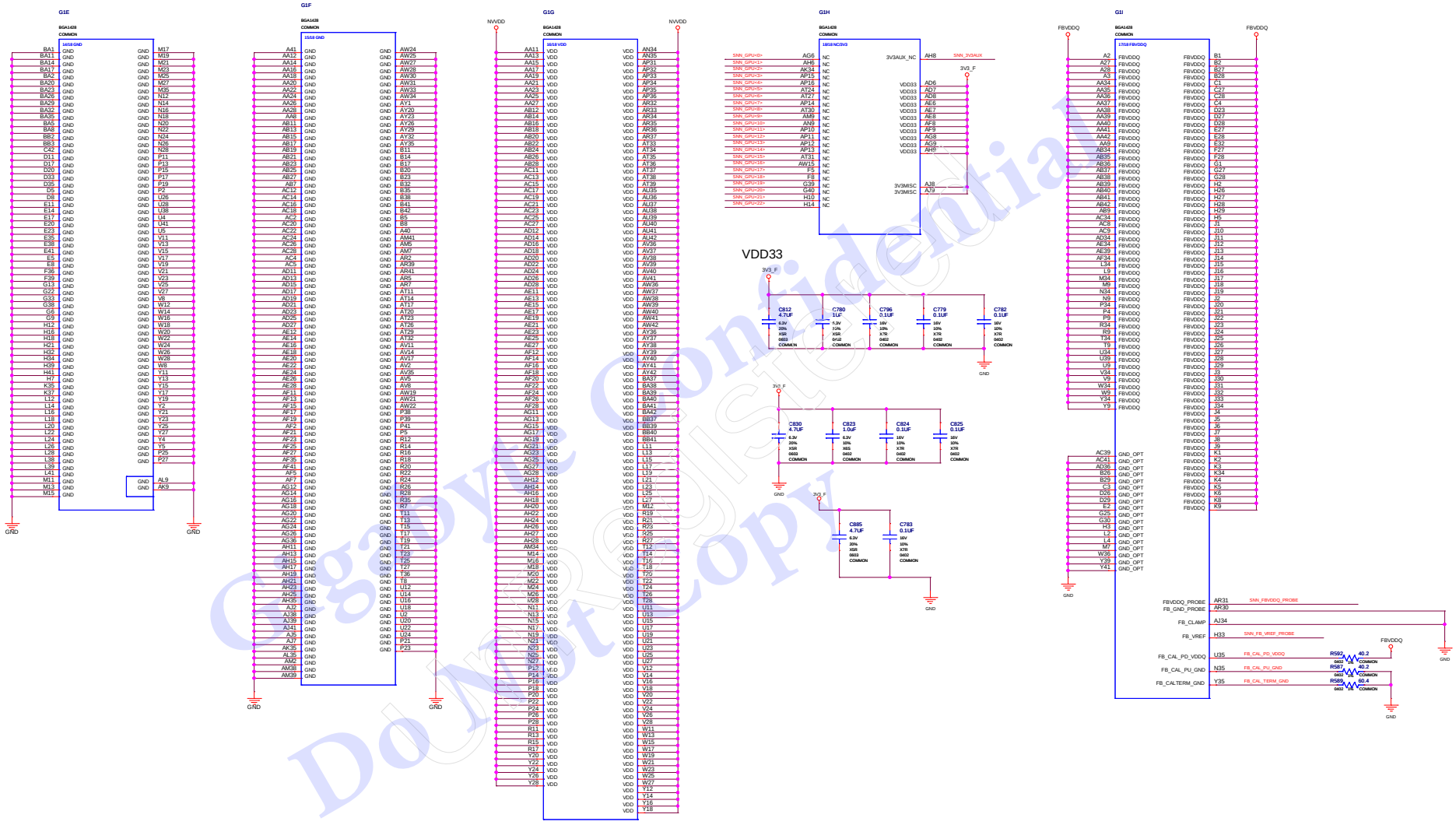

Gigabyte Confidential
Do Not Copy

ASSEMBLY	BASE LEVEL GENERIC SCHEMATIC ONLY
PAGE DETAIL	GPU PWR and GND

ALL NVIDIA DESIGN SPECIFICATIONS, REFERENCE SPECIFICATIONS, REFERENCE BOARDS, FILES, DRAWINGS, DIAGNOSTICS, LISTS AND OTHER DOCUMENTS OR INFORMATION (TOGETHER AND SEPARATELY, "MATERIALS") ARE BEING PROVIDED "AS IS". THE MATERIALS MAY CONTAIN KNOWN AND UNKNOWN VIOLATIONS OR DEVIATIONS OF INDUSTRY STANDARDS AND SPECIFICATIONS. NVIDIA MAKES NO WARRANTIES, EXPRESSED, IMPLIED, STATUTORY OR OTHERWISE WITH RESPECT TO THE MATERIALS OR OTHERWISE, AND EXPRESSLY DISCLAIMS ALL IMPLIED WARRANTIES INCLUDING, WITHOUT LIMITATION, THE WARRANTIES OF DESIGN, OF NONINFRINGEMENT, MERCHANTABILITY OR FITNESS FOR A PARTICULAR PURPOSE, OR ARISING FROM A COURSE OF DEALING, TRADE USAGE, TRADE PRACTICE, OR INDUSTRY STANDARDS.

GIGABYTE

Title: Table of Contents

Size	Document Number	Rev
Custom	GV-N660WF2-2GD	1.0

Date: Wednesday, October 24, 2012 Sheet 12 of 31

GPU Decoupling

FBVDDQ

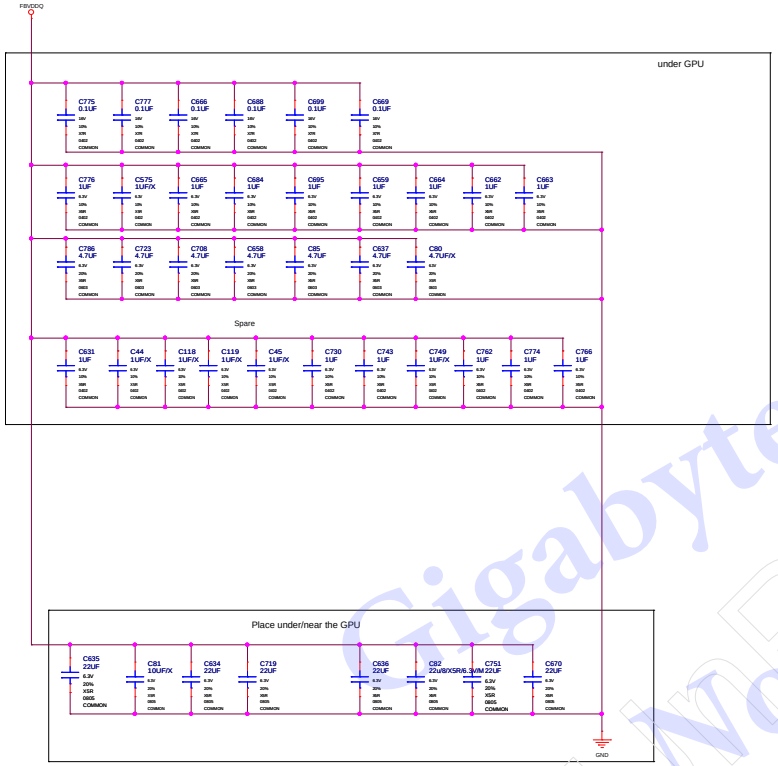

NVVDD

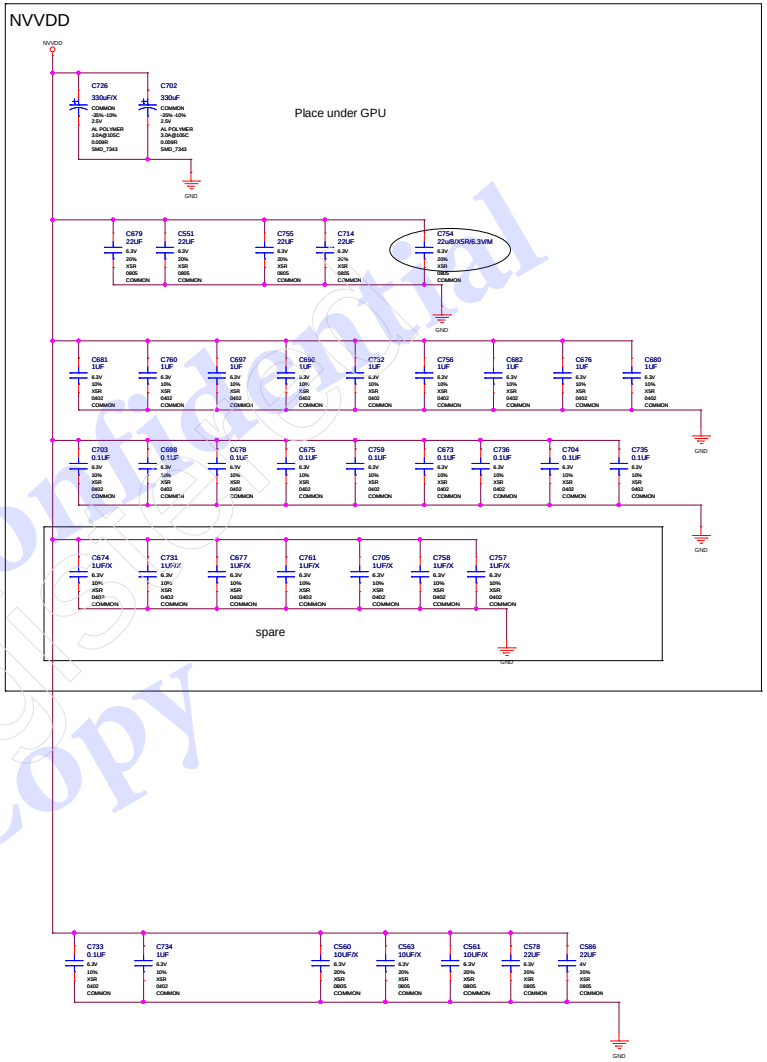

	guidelines	actual
Under GPU	2x 330uF 9mOhm	1x 330uF 9mOhm
	1x 47uF 1206	1x 22uF 1206
	2x 22uF 805	4x 22uF 805
	2x 10uF 805	9x 1uF 402
	9x 1uF 402	9x 0.1uF 402
	9x 0.1uF 402	
		spare sites (not stuffed)
		1x 7343
		27x 402
near GPU	1x 47uF 1206	2x 22uF
	2x 22uF 805	
	2x 10uF 805	spare sites (not stuffed)
	2x 4.7uF 603	3x 805
	1x 1uF 402	
	1x 0.1uF 402	

Gigabyte Confidential
Do Not Copy

ASSEMBLY
PAGE DETAIL

BASE LEVEL GENERIC SCHEMATIC ONLY
GPU Decoupling

ALL NVIDIA DESIGN SPECIFICATIONS, REFERENCE SPECIFICATIONS, REFERENCE BOARDS, FILES, DRAWINGS, DIAGNOSTICS, LISTS AND OTHER DOCUMENTS OR INFORMATION (TOGETHER AND SEPARATELY, 'MATERIALS') ARE BEING PROVIDED 'AS IS'. THE MATERIALS MAY CONTAIN KNOWN AND UNKNOWN VIOLATIONS OR DEVIATIONS OF INDUSTRY STANDARDS AND SPECIFICATIONS. NVIDIA MAKES NO WARRANTIES, EXPRESSED, IMPLIED, STATUTORY OR OTHERWISE WITH RESPECT TO THE MATERIALS OR OTHERWISE, AND EXPRESSLY DISCLAIMS ALL IMPLIED WARRANTIES INCLUDING, WITHOUT LIMITATION, THE WARRANTIES OF DESIGN, OF NONINFRINGEMENT, MERCHANTABILITY OR FITNESS FOR A PARTICULAR PURPOSE, OR ARISING FROM A COURSE OF DEALING, TRADE USAGE, TRADE PRACTICE, OR INDUSTRY STANDARDS.

GIGABYTE

Title: Table of Contents

Size	Document Number	Rev
Custom	GV-N660WF2-2GD	1.0

Date: Wednesday, October 24, 2012 Sheet 13 of 31

DACA Interface

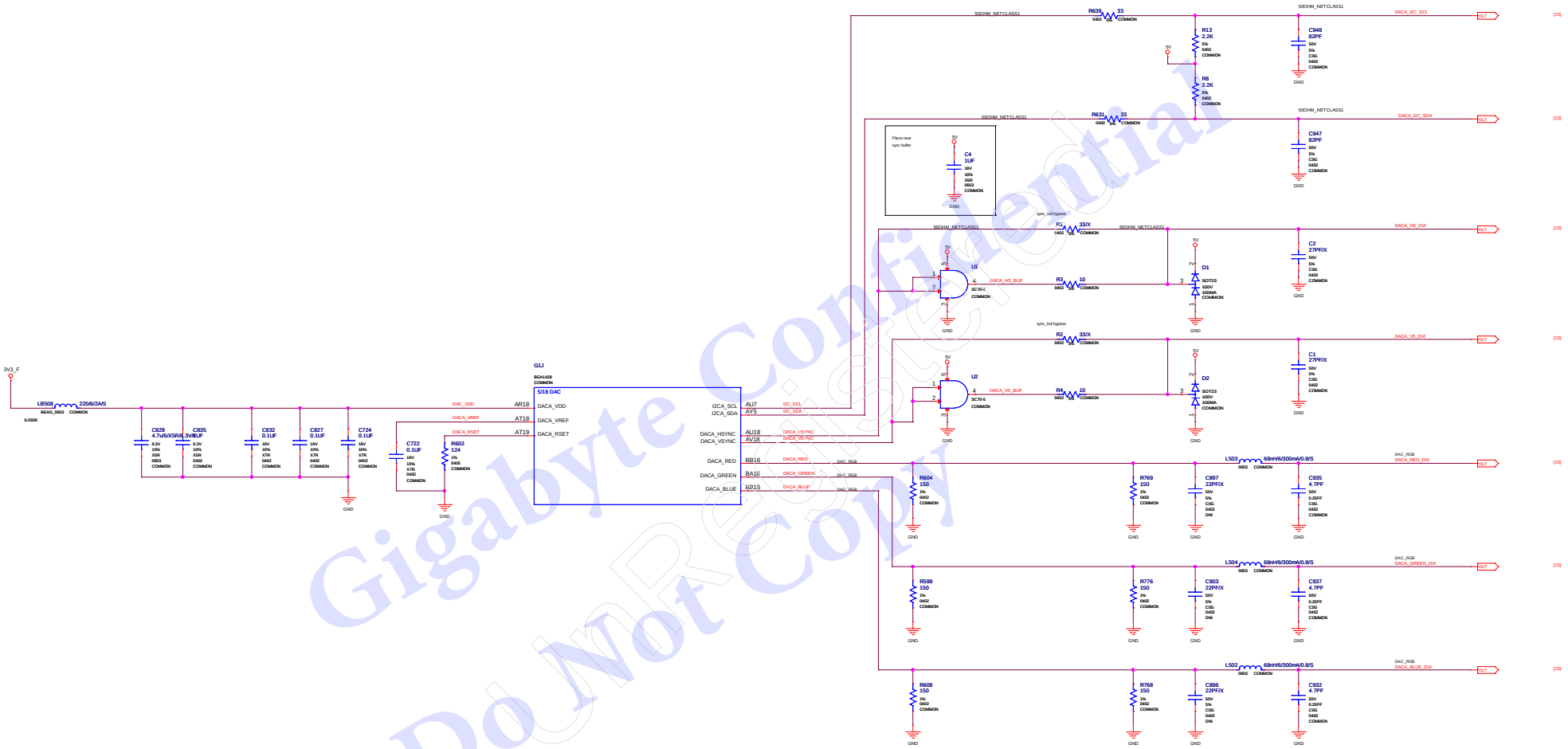

NET	VOLTAGE	MAX_CURRENT	MIN_WIDTH
DAC_VDD	3.3V	0.25A	16MIL

ASSEMBLY
PAGE DETAIL

BASE LEVEL GENERIC SCHEMATIC ONLY
DACA Interface

ALL NVIDIA DESIGN SPECIFICATIONS, REFERENCE SPECIFICATIONS, REFERENCE BOARDS, FILES, DRAWINGS, DIAGNOSTICS, LISTS AND OTHER DOCUMENTS OR INFORMATION (TOGETHER AND SEPARATELY, "MATERIALS") ARE BEING PROVIDED "AS IS". THE MATERIALS MAY CONTAIN KNOWN AND UNKNOWN VIOLATIONS OR DEVIATIONS OF INDUSTRY STANDARDS AND SPECIFICATIONS. NVIDIA MAKES NO WARRANTIES, EXPRESSED, IMPLIED, STATUTORY OR OTHERWISE WITH RESPECT TO THE MATERIALS OR OTHERWISE, AND EXPRESSLY DISCLAIMS ALL IMPLIED WARRANTIES INCLUDING, WITHOUT LIMITATION, THE WARRANTIES OF DESIGN, OF NONINFRINGEMENT, MERCHANTABILITY OR FITNESS FOR A PARTICULAR PURPOSE, OR ARISING FROM A COURSE OF DEALING, TRADE USAGE, TRADE PRACTICE, OR INDUSTRY STANDARDS.

GIGABYTE

Title: Table of Contents

Size: Custom | Document Number: GV-N660WF2-2GD | Rev: 1.0

Date: Wednesday, October 24, 2012 | Sheet 14 of 31

Gigabyte Confidential
Do Not Copy

IFPAB DVI-I-DL

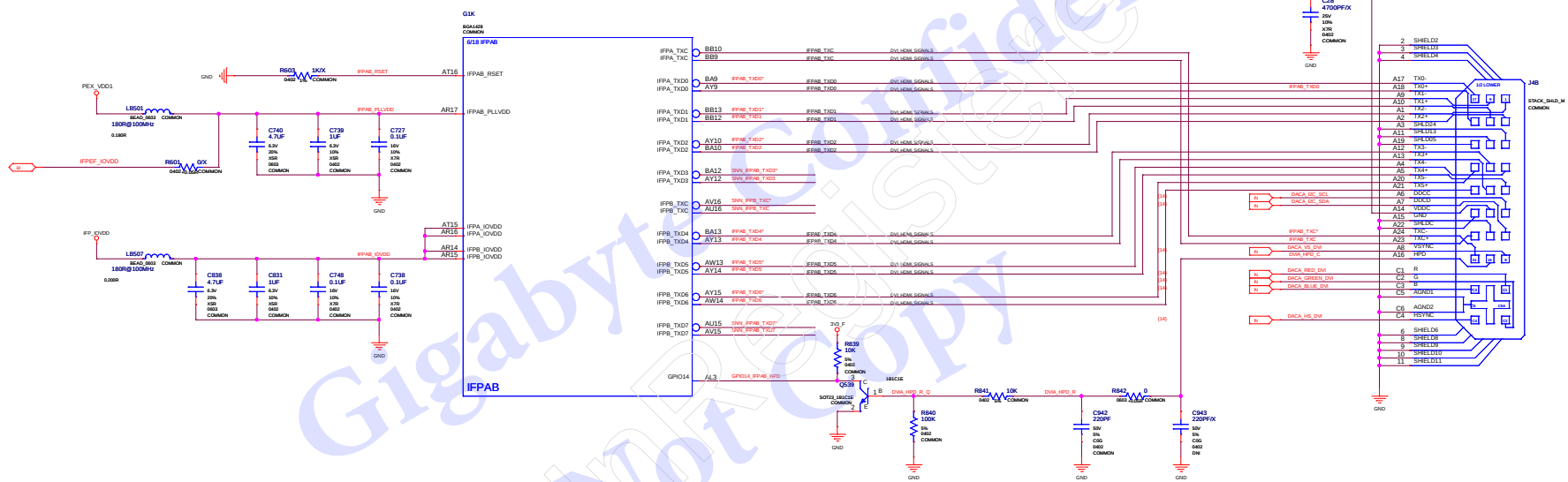

Gigabyte Confidential
Do Not Copy
Registered

IFPAB_PLLVDD	1V	0.03A	0.406
IFPAB_IOVDD	3.3V	0.15A	0.406

ASSEMBLY
PAGE DETAIL

BASE LEVEL GENERIC SCHEMATIC ONLY
IFPAB DVI-I-DL

ALL NVIDIA DESIGN SPECIFICATIONS, REFERENCE SPECIFICATIONS, REFERENCE BOARDS, FILES, DRAWINGS, DIAGNOSTICS, LISTS AND OTHER DOCUMENTS OR INFORMATION (TOGETHER AND SEPARATELY, "MATERIALS") ARE BEING PROVIDED "AS IS". THE MATERIALS MAY CONTAIN KNOWN AND UNKNOWN VIOLATIONS OR DEVIATIONS OF INDUSTRY STANDARDS AND SPECIFICATIONS. NVIDIA MAKES NO WARRANTIES, EXPRESSED, IMPLIED, STATUTORY OR OTHERWISE WITH RESPECT TO THE MATERIALS OR OTHERWISE, AND EXPRESSLY DISCLAIMS ALL IMPLIED WARRANTIES INCLUDING, WITHOUT LIMITATION, THE WARRANTIES OF DESIGN, OF NONINFRINGEMENT, MERCHANTABILITY OR FITNESS FOR A PARTICULAR PURPOSE, OR ARISING FROM A COURSE OF DEALING, TRADE USAGE, TRADE PRACTICE, OR INDUSTRY STANDARDS.

GIGABYTE

Title: Table of Contents

Size	Document Number	Rev
Custom	GV-N660WF2-2GD	1.0

Date: Wednesday, October 24, 2012 Sheet 15 of 31

IFPEF DVI-D-DL

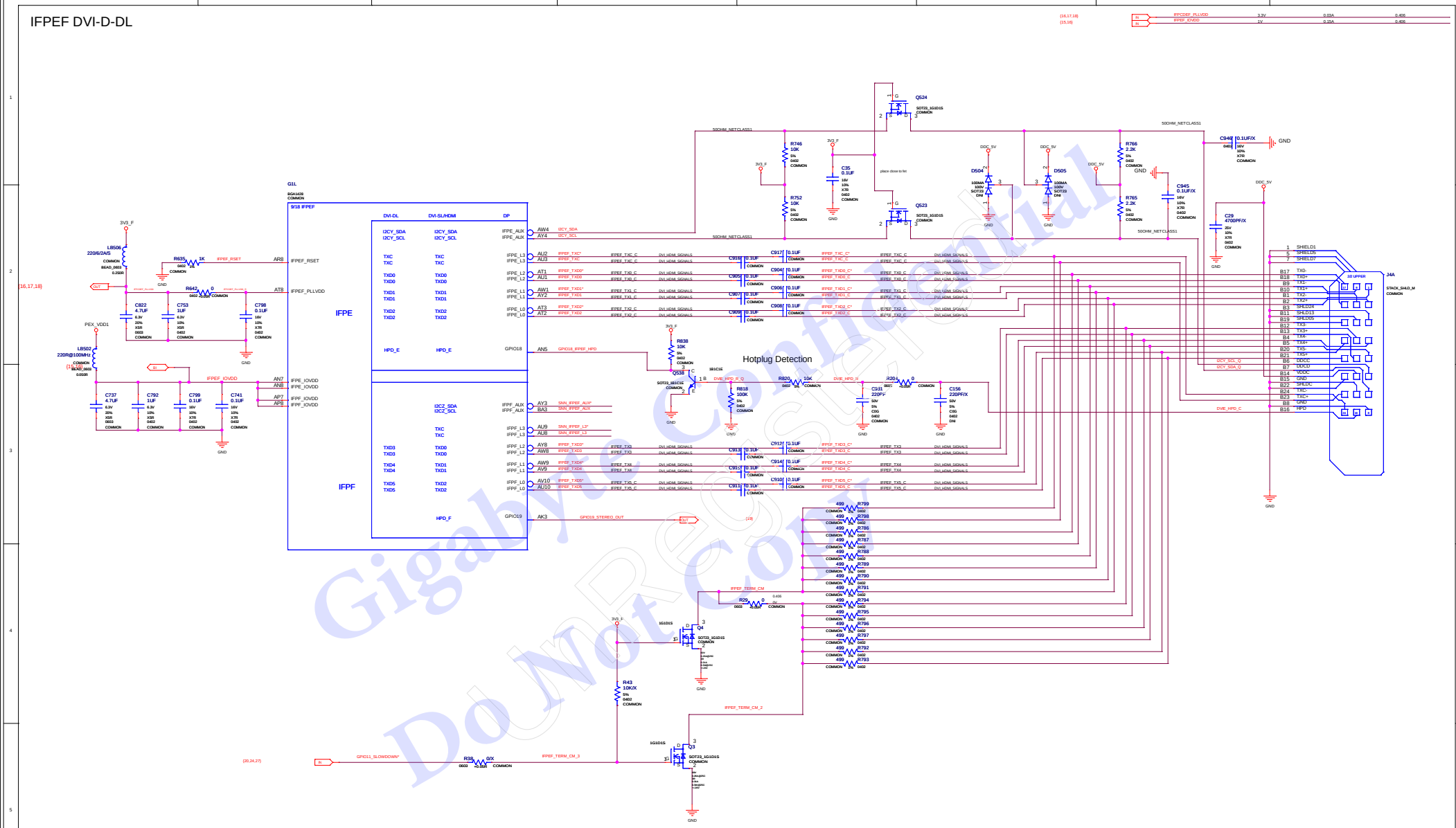

ALL NVIDIA DESIGN SPECIFICATIONS, REFERENCE SPECIFICATIONS, REFERENCE BOARDS, FILES, DRAWINGS, DIAGNOSTICS, LISTS AND OTHER DOCUMENTS OR INFORMATION (TOGETHER AND SEPARATELY, "MATERIALS") ARE BEING PROVIDED "AS IS". THE MATERIALS MAY CONTAIN KNOWN AND UNKNOWN VIOLATIONS OR DEVIATIONS OF INDUSTRY STANDARDS AND SPECIFICATIONS. NVIDIA MAKES NO WARRANTIES, EXPRESSED, IMPLIED, STATUTORY OR OTHERWISE WITH RESPECT TO THE MATERIALS OR OTHERWISE, AND EXPRESSLY DISCLAIMS ALL IMPLIED WARRANTIES INCLUDING, WITHOUT LIMITATION, THE WARRANTIES OF DESIGN, OF NONINFRINGEMENT, MERCHANTABILITY OR FITNESS FOR A PARTICULAR PURPOSE, OR ARISING FROM A COURSE OF DEALING, TRADE USAGE, TRADE PRACTICE, OR INDUSTRY STANDARDS.

Gigabyte Confidential
Do Not Copy

IFPC HDMI/DP

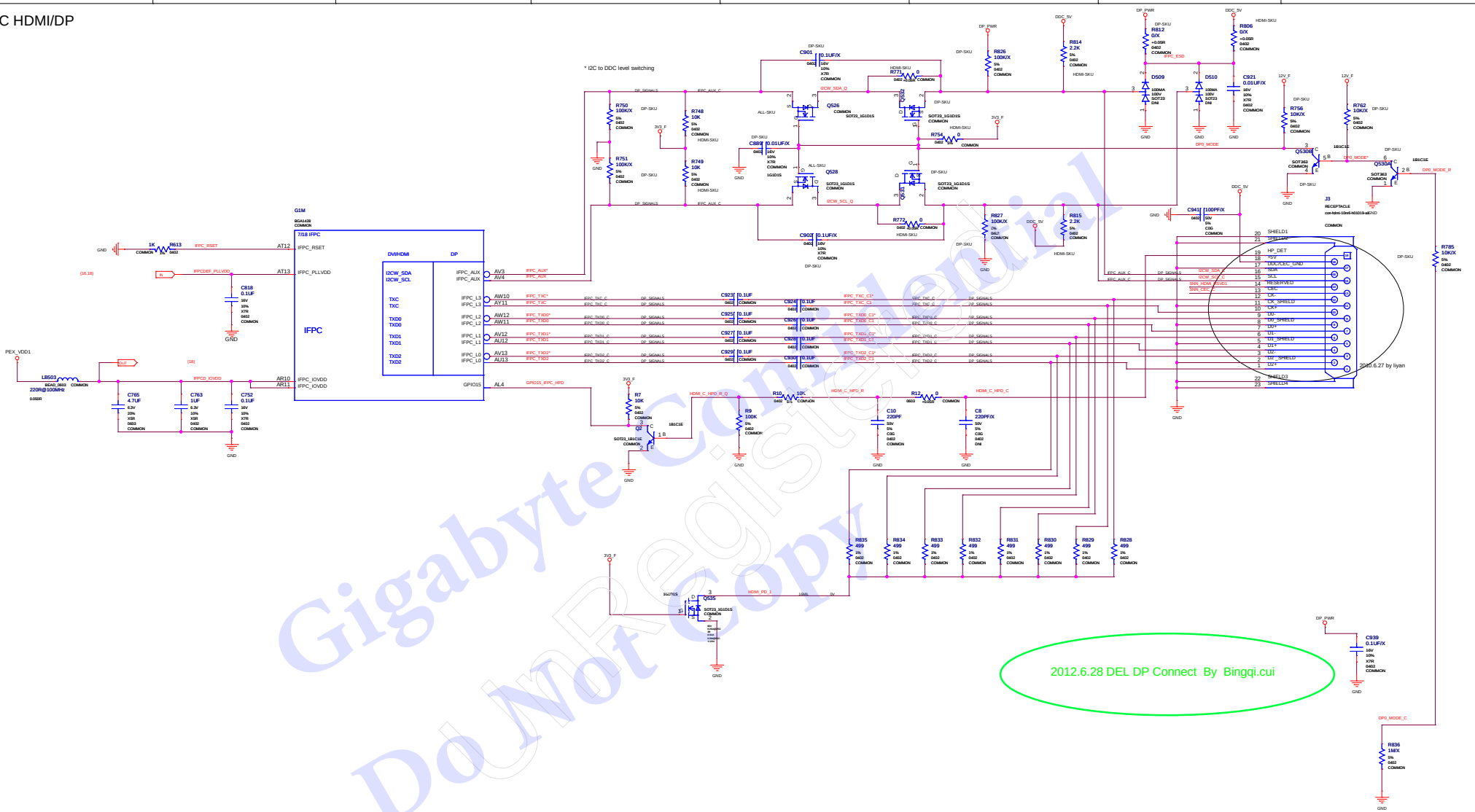

Gigabyte Confidential
Do Not Copy
Do Not Distribute

ASSEMBLY
PAGE DETAIL

BASE LEVEL GENERIC SCHEMATIC ONLY
IFPC HDMI/DP

ALL NVIDIA DESIGN SPECIFICATIONS, REFERENCE SPECIFICATIONS, REFERENCE BOARDS, FILES, DRAWINGS, DIAGNOSTICS, LISTS AND OTHER DOCUMENTS OR INFORMATION (TOGETHER AND SEPARATELY, 'MATERIALS') ARE BEING PROVIDED 'AS IS'. THE MATERIALS MAY CONTAIN KNOWN AND UNKNOWN VIOLATIONS OR DEVIATIONS OF INDUSTRY STANDARDS AND SPECIFICATIONS. NVIDIA MAKES NO WARRANTIES, EXPRESSED, IMPLIED, STATUTORY OR OTHERWISE WITH RESPECT TO THE MATERIALS OR OTHERWISE, AND EXPRESSLY DISCLAIMS ALL IMPLIED WARRANTIES INCLUDING, WITHOUT LIMITATION, THE WARRANTIES OF DESIGN, OF NONINFRINGEMENT, MERCHANTABILITY OR FITNESS FOR A PARTICULAR PURPOSE, OR ARISING FROM A COURSE OF DEALING, TRADE USAGE, TRADE PRACTICE, OR INDUSTRY STANDARDS.

GIGABYTE

Title: Table of Contents

Size	Document Number	Rev
Custom	GV-N660WF2-2GD	1.0

Date: Wednesday, October 24, 2012 Sheet 17 of 31

IFPD DP

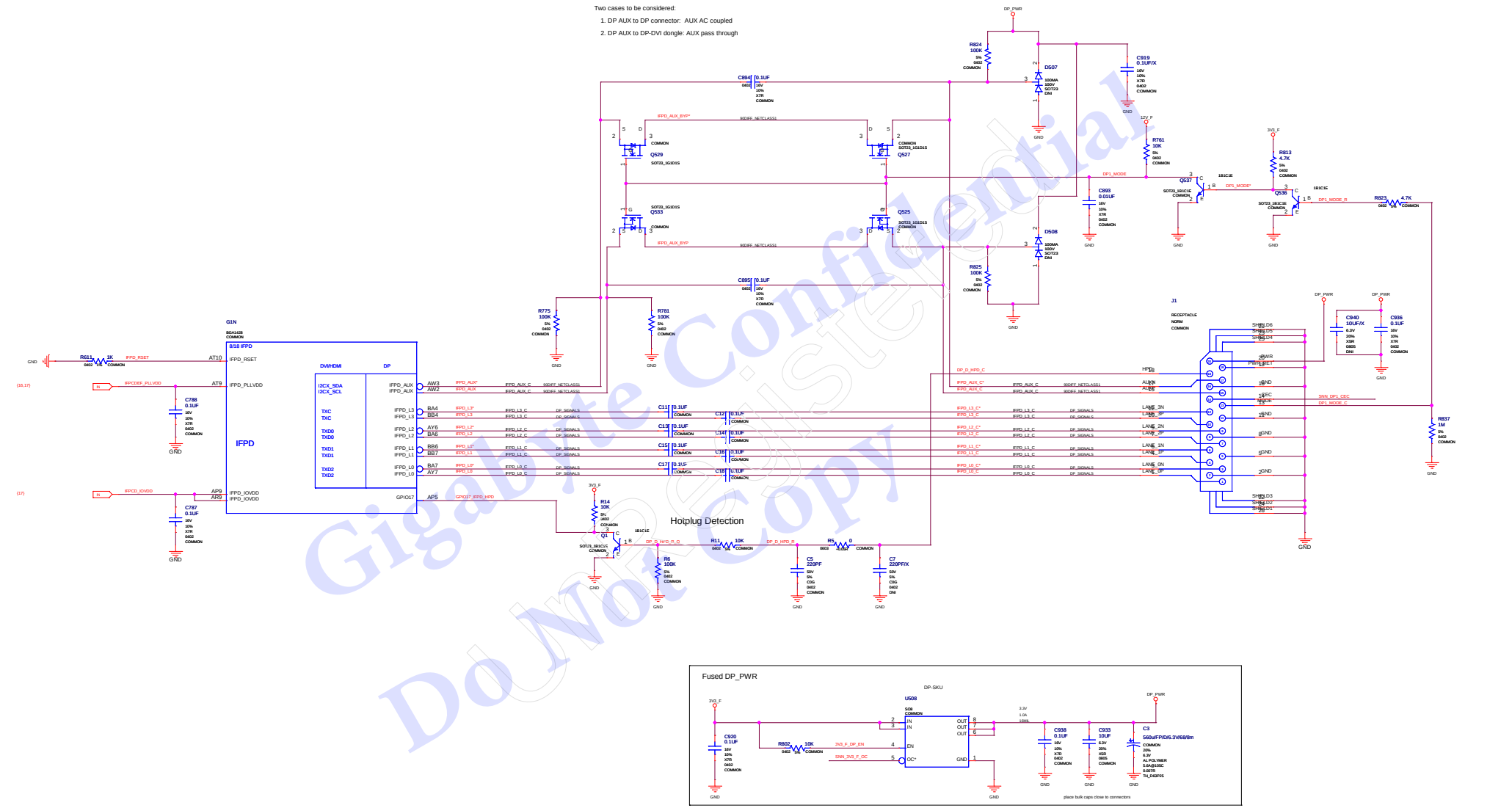

Gigabyte Confidential
Do Not Copy

ASSEMBLY
PAGE DETAIL

BASE LEVEL GENERIC SCHEMATIC ONLY
IFPD DP

ALL NVIDIA DESIGN SPECIFICATIONS, REFERENCE SPECIFICATIONS, REFERENCE BOARDS, FILES, DRAWINGS, DIAGNOSTICS, LISTS AND OTHER DOCUMENTS OR INFORMATION (TOGETHER AND SEPARATELY, 'MATERIALS') ARE BEING PROVIDED 'AS IS'. THE MATERIALS MAY CONTAIN KNOWN AND UNKNOWN VIOLATIONS OR DEVIATIONS OF INDUSTRY STANDARDS AND SPECIFICATIONS. NVIDIA MAKES NO WARRANTIES, EXPRESSED, IMPLIED, STATUTORY OR OTHERWISE WITH RESPECT TO THE MATERIALS OR OTHERWISE, AND EXPRESSLY DISCLAIMS ALL IMPLIED WARRANTIES INCLUDING, WITHOUT LIMITATION, THE WARRANTIES OF DESIGN, OF NONINFRINGEMENT, MERCHANTABILITY OR FITNESS FOR A PARTICULAR PURPOSE, OR ARISING FROM A COURSE OF DEALING, TRADE USAGE, TRADE PRACTICE, OR INDUSTRY STANDARDS.

MIOA/SLI Interface

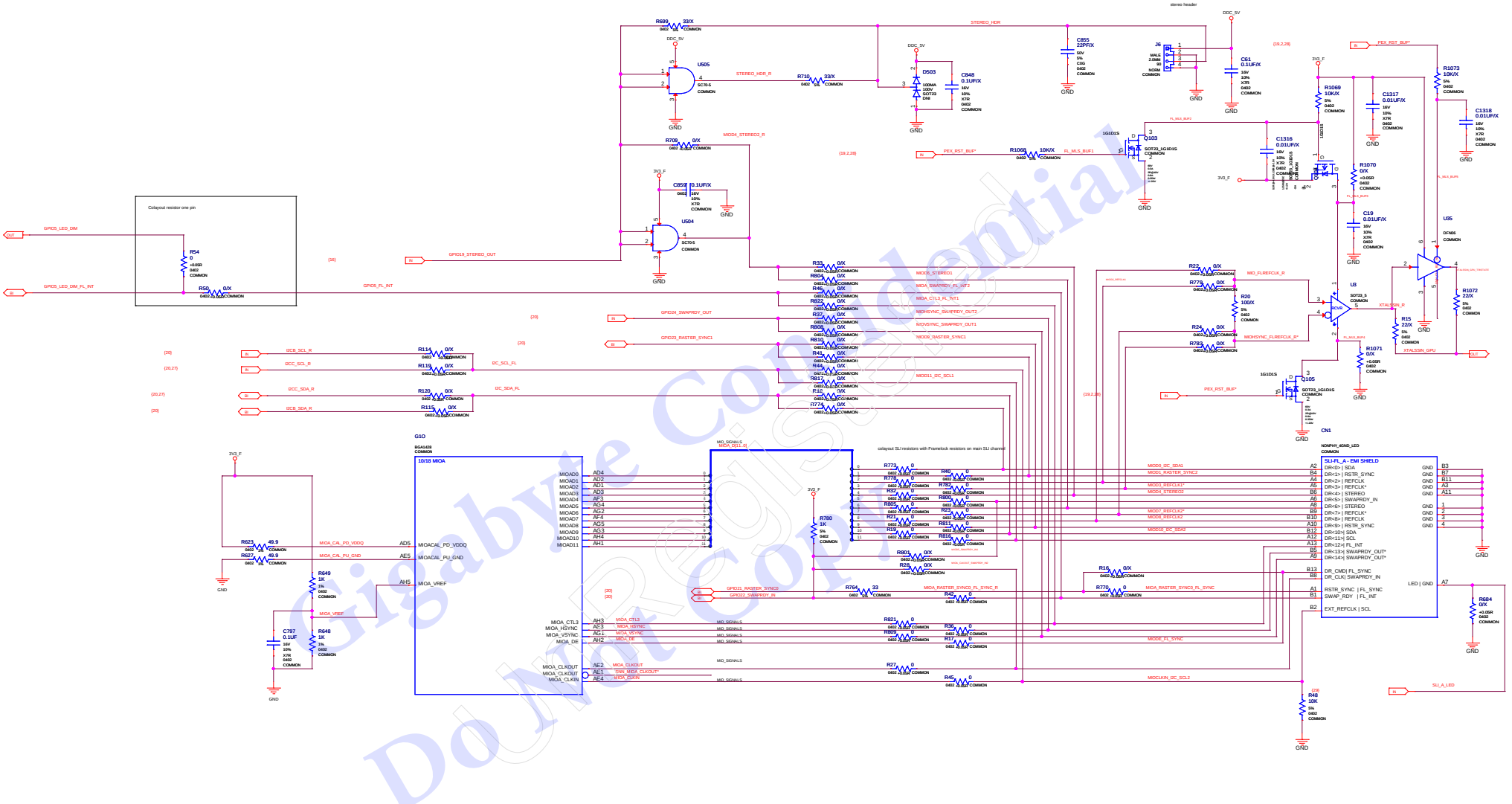

NET	VOLTAGE	MAX_CURRENT	MIN_WIDTH
MIOA_VREF	1.49V		0.305
MIOA_CAL_PD_VDDQ	2.5V		0.305
MIOA_CAL_PU_GND	0.0V		0.305

ASSEMBLY	BASE LEVEL GENERIC SCHEMATIC ONLY
PAGE DETAIL	MIOA/SLI/Stereo Hdr Interface

ALL NVIDIA DESIGN SPECIFICATIONS, REFERENCE SPECIFICATIONS, REFERENCE BOARDS, FILES, DRAWINGS, DIAGNOSTICS, LISTS AND OTHER DOCUMENTS OR INFORMATION (TOGETHER AND SEPARATELY, "MATERIALS") ARE BEING PROVIDED "AS IS". THE MATERIALS MAY CONTAIN KNOWN AND UNKNOWN VIOLATIONS OR DEVIATIONS OF INDUSTRY STANDARDS AND SPECIFICATIONS. NVIDIA MAKES NO WARRANTIES, EXPRESSED, IMPLIED, STATUTORY OR OTHERWISE WITH RESPECT TO THE MATERIALS OR OTHERWISE, AND EXPRESSLY DISCLAIMS ALL IMPLIED WARRANTIES INCLUDING, WITHOUT LIMITATION, THE WARRANTIES OF DESIGN, OF NONINFRINGEMENT, MERCHANTABILITY OR FITNESS FOR A PARTICULAR PURPOSE, OR ARISING FROM A COURSE OF DEALING, TRADE USAGE, TRADE PRACTICE, OR INDUSTRY STANDARDS.

Gigabyte Confidential
Do Not Copy

GIGABYTE

Title: Table of Contents

Size	Document Number	Rev
Custom	GV-N660WF2-2GD	1.0

Date: Wednesday, October 24, 2012 Sheet 19 of 31

MISC1: Fan, Thermal, JTAG, GPIO

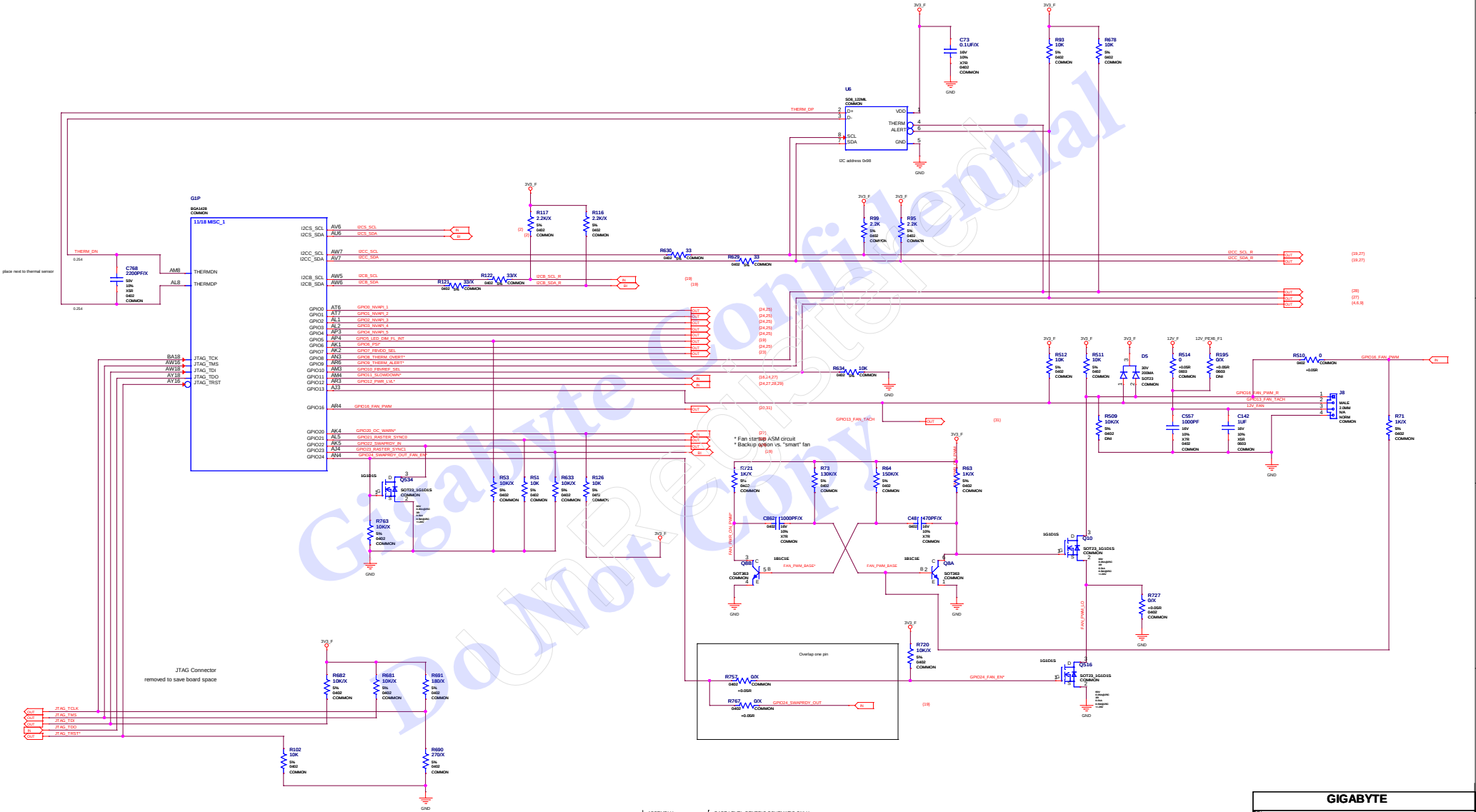

Gigabyte Confidential
Do Not Copy

ASSEMBLY
PAGE DETAIL

BASE LEVEL GENERIC SCHEMATIC ONLY
MISC1: Fan, Thermal, JTAG, GPIO

ALL NVIDIA DESIGN SPECIFICATIONS, REFERENCE SPECIFICATIONS, REFERENCE BOARDS, FILES, DRAWINGS, DIAGNOSTICS, LISTS AND OTHER DOCUMENTS OR INFORMATION (TOGETHER AND SEPARATELY, "MATERIALS") ARE BEING PROVIDED "AS IS". THE MATERIALS MAY CONTAIN KNOWN AND UNKNOWN VIOLATIONS OR DEVIATIONS OF INDUSTRY STANDARDS AND SPECIFICATIONS. NVIDIA MAKES NO WARRANTIES, EXPRESSED, IMPLIED, STATUTORY OR OTHERWISE WITH RESPECT TO THE MATERIALS OR OTHERWISE, AND EXPRESSLY DISCLAIMS ALL IMPLIED WARRANTIES INCLUDING, WITHOUT LIMITATION, THE WARRANTIES OF DESIGN, OF NONINFRINGEMENT, MERCHANTABILITY OR FITNESS FOR A PARTICULAR PURPOSE, OR ARISING FROM A COURSE OF DEALING, TRADE USAGE, TRADE PRACTICE, OR INDUSTRY STANDARDS.

GIGABYTE	
Title	Table of Contents
Size: Custom	Document Number: GV-N660WF2-2GD
Rev: 1.0	
Date: Wednesday, October 24, 2012	Sheet 20 of 31

MISC2: ROM, XTAL, Straps

STRAP0	USER_BIT [3:0]*	0000*	5K PD*
STRAP1	3GIO_PADCFG_LUT_ADR*	0000*	5K PD Desktop*
STRAP2	PCI_DEVID [3:0]*	0000 - (0x11C0)* 0010 - (0x11C1)* 0050 - (0x11C4)* 0500 - (0x11FA)*	5K PD -400 GPU* 10K PD -250 GPU* 25K PD -225 GPU* 15K PU -875 GPU*

	GND	3V3
5k	0000	1000
10k	0001	1001
15k	0010	1010
20k	0011	1011
25k	0100	1100
30k	0101	1101
35k	0110	1110
45k	0111	1111

STRAP3	SOR_EXPOSED [3:0]*	1111*		45K PU*
STRAP4	*			
	PEX_SPD_CHANGE_GEN3*	1*	ENABLED*	45K PD*
	PEX_MAX_SPEED*	1*	FOR GEN2/3*	
	DP_PLL_VDD_33V*	1*	FOR 3_3V*	
ROM_SI	RAMCFG[3]*	0*		35K PD* 45K PD*
	RAMCFG[2]*	1*		
	RAMCFG[1]*	1*		
	RAMCFG[0]*	0*		
ROM_SO	FB[1]_APERTURE_SIZE*	0*	For 128MB*	30k PD*
	FB[0]_APERTURE_SIZE*	1*	For 128MB*	
	SMB_ALT_ADDR*	0*		
	VGA_DEVICE*	1*		
ROM_SCLK	PCI_DEVID_EXT[4]*	0*	For 0x11C0*	25K PD* 25K PD* 25K PD* 35K PU*
	SUB_VENDOR*	1*	Dedicated BIOS*	
	PCI_DEVID_EXT[5]*	0*	For 0x11C0*	
	PEX_PLL_EN_TERM100*	0*	ENABLED*	

BINARY PRODUCTION	MULTI_STRAP_REF0_GND
BINARY BRINGUP	NC
MULTI-LEVEL	NC 0.1k 1% TO GND

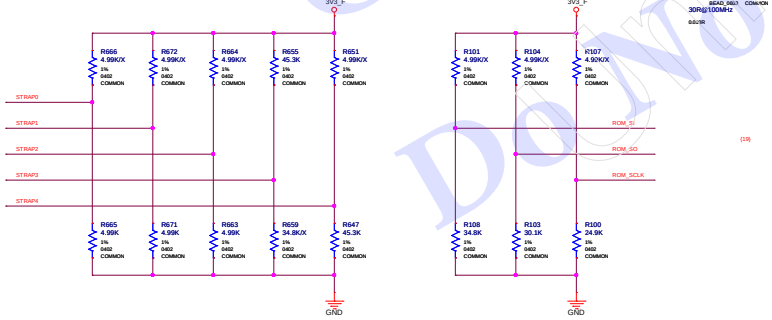

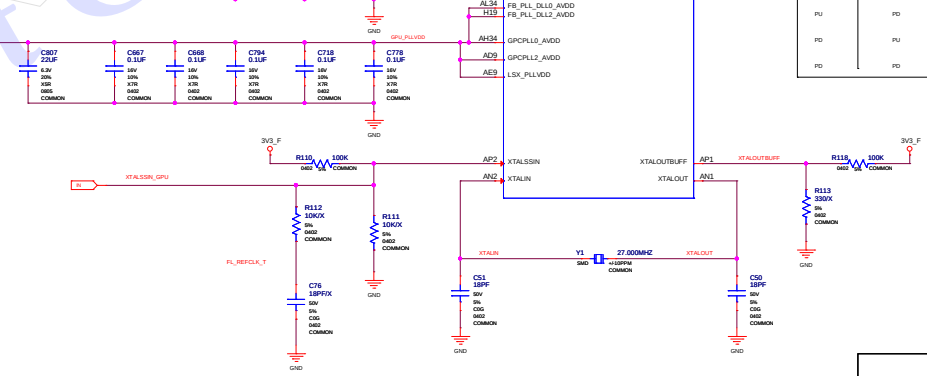

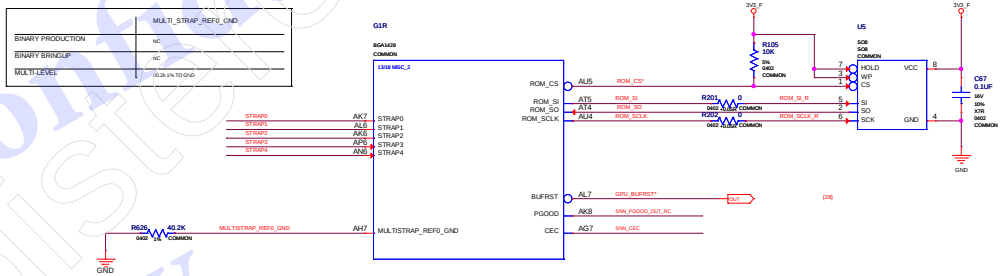

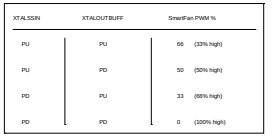

Gigabyte Confidential
Do Not Copy

ALL NVIDIA DESIGN SPECIFICATIONS, REFERENCE SPECIFICATIONS, REFERENCE BOARDS, FILES, DRAWINGS, DIAGNOSTICS, LISTS AND OTHER DOCUMENTS OR INFORMATION (TOGETHER AND SEPARATELY, 'MATERIALS') ARE BEING PROVIDED 'AS IS'. THE MATERIALS MAY CONTAIN KNOWN AND UNKNOWN VIOLATIONS OR DEVIATIONS OF INDUSTRY STANDARDS AND SPECIFICATIONS. NVIDIA MAKES NO WARRANTIES, EXPRESSED, IMPLIED, STATUTORY OR OTHERWISE WITH RESPECT TO THE MATERIALS OR OTHERWISE, AND EXPRESSLY DISCLAIMS ALL IMPLIED WARRANTIES INCLUDING, WITHOUT LIMITATION, THE WARRANTIES OF DESIGN, OF NONINFRINGEMENT, MERCHANTABILITY OR FITNESS FOR A PARTICULAR PURPOSE, OR ARISING FROM A COURSE OF DEALING, TRADE USAGE, TRADE PRACTICE, OR INDUSTRY STANDARDS.

ASSEMBLY	BASE LEVEL GENERIC SCHEMATIC ONLY
PAGE DETAIL	MISC2: ROM, XTAL, Straps

GIGABYTE

Title: Table of Contents

Size: Custom | Document Number: GV-N660WF2-2GD | Rev: 1.0

Date: Wednesday, October 24, 2012 | Sheet 21 of 31

PS: 5V, PEX_VDD

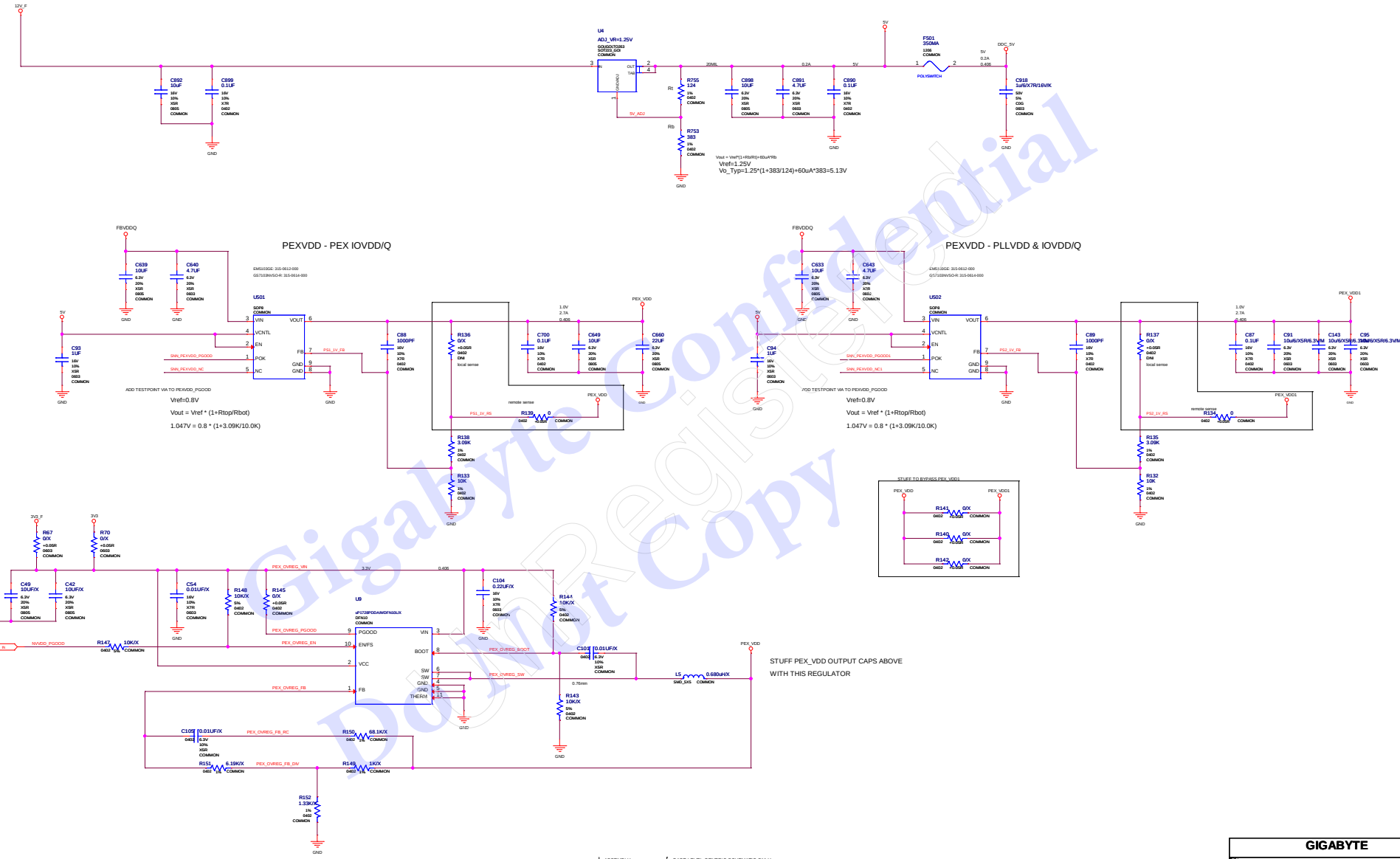

Gigabyte Confidential
Do Not Copy

ASSEMBLY	BASE LEVEL GENERIC SCHEMATIC ONLY
PAGE DETAIL	PS: 5V, PEX_VDD

ALL NVIDIA DESIGN SPECIFICATIONS, REFERENCE SPECIFICATIONS, REFERENCE BOARDS, FILES, DRAWINGS, DIAGNOSTICS, LISTS AND OTHER DOCUMENTS OR INFORMATION (TOGETHER AND SEPARATELY, "MATERIALS") ARE BEING PROVIDED "AS IS". THE MATERIALS MAY CONTAIN KNOWN AND UNKNOWN VIOLATIONS OR DEVIATIONS OF INDUSTRY STANDARDS AND SPECIFICATIONS. NVIDIA MAKES NO WARRANTIES, EXPRESSED, IMPLIED, STATUTORY OR OTHERWISE WITH RESPECT TO THE MATERIALS OR OTHERWISE, AND EXPRESSLY DISCLAIMS ALL IMPLIED WARRANTIES INCLUDING, WITHOUT LIMITATION, THE WARRANTIES OF DESIGN, OF NONINFRINGEMENT, MERCHANTABILITY OR FITNESS FOR A PARTICULAR PURPOSE, OR ARISING FROM A COURSE OF DEALING, TRADE USAGE, TRADE PRACTICE, OR INDUSTRY STANDARDS.

GIGABYTE		
Title: Table of Contents		
Size: Custom	Document Number: GV-N660WF2-2GD	Rev: 1.0
Date: Wednesday, October 24, 2012	Sheet 22 of 31	

PS: FBVDDQ

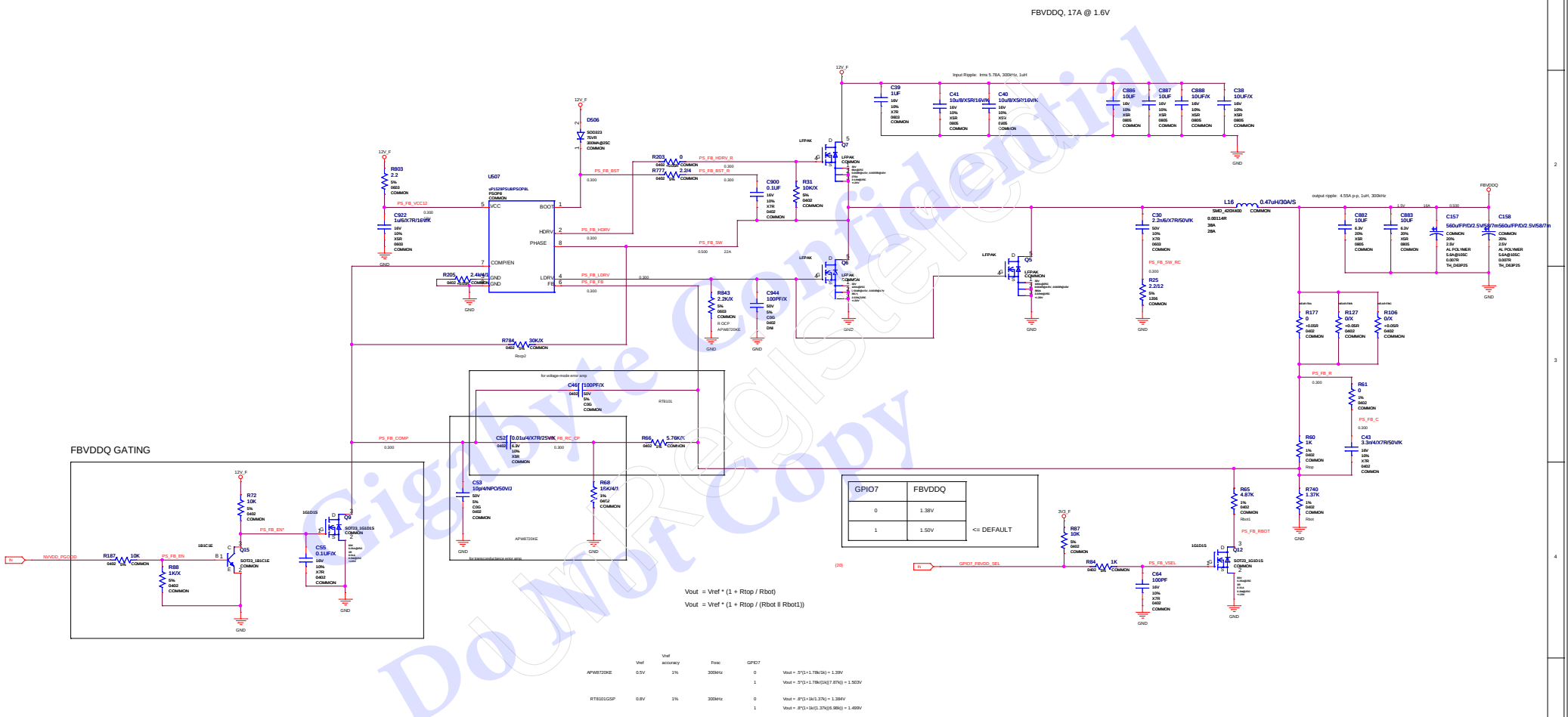

Gigabyte Confidential
Do Not Copy

ASSEMBLY
PAGE DETAIL

BASE LEVEL GENERIC SCHEMATIC ONLY
PS: FBVDDQ

ALL NVIDIA DESIGN SPECIFICATIONS, REFERENCE SPECIFICATIONS, REFERENCE BOARDS, FILES, DRAWINGS, DIAGNOSTICS, LISTS AND OTHER DOCUMENTS OR INFORMATION (TOGETHER AND SEPARATELY, "MATERIALS") ARE BEING PROVIDED "AS IS". THE MATERIALS MAY CONTAIN KNOWN AND UNKNOWN VIOLATIONS OR DEVIATIONS OF INDUSTRY STANDARDS AND SPECIFICATIONS. NVIDIA MAKES NO WARRANTIES, EXPRESSED, IMPLIED, STATUTORY OR OTHERWISE WITH RESPECT TO THE MATERIALS OR OTHERWISE, AND EXPRESSLY DISCLAIMS ALL IMPLIED WARRANTIES INCLUDING, WITHOUT LIMITATION, THE WARRANTIES OF DESIGN, OF NONINFRINGEMENT, MERCHANTABILITY OR FITNESS FOR A PARTICULAR PURPOSE, OR ARISING FROM A COURSE OF DEALING, TRADE USAGE, TRADE PRACTICE, OR INDUSTRY STANDARDS.

GIGABYTE

Title: Table of Contents

Size: Custom | Document Number: GV-N660WF2-2GD | Rev: 1.0

Date: Wednesday, October 24, 2012 | Sheet 23 of 31

PS: NVVDD Controller, VID and PSI

VID Table

GPIO4	GPIO3	GPIO2	GPIO1	GPIO0	VOUT
VID_5	VID_4	VID_3	VID_2	VID_1	
0	0	0	0	0	1.2125V
0	0	0	0	1	1.2000V
0	0	0	1	0	1.1875V
0	0	0	1	1	1.1750V
0	0	1	0	0	1.1625V
0	0	1	0	1	1.1500V
0	0	1	1	0	1.1375V
0	0	1	1	1	1.1250V
0	1	0	0	0	1.1125V
0	1	0	0	1	1.1000V
0	1	0	1	0	1.0875V
0	1	0	1	1	1.0750V
0	1	1	0	0	1.0625V
0	1	1	0	1	1.0500V
0	1	1	1	0	1.0375V
0	1	1	1	1	1.0250V
1	0	0	0	0	1.0125V
1	0	0	0	1	1.0000V
1	0	0	1	0	0.9875V
1	0	0	1	1	0.9750V
1	0	1	0	0	0.9625V
1	0	1	0	1	0.9500V
1	0	1	1	0	0.9375V
1	0	1	1	1	0.9250V
1	1	0	0	0	0.9125V
1	1	0	0	1	0.9000V
1	1	0	1	0	0.8875V
1	1	0	1	1	0.8750V
1	1	1	0	0	0.8625V
1	1	1	0	1	0.8500V
1	1	1	1	0	0.8375V
1	1	1	1	1	0.8250V

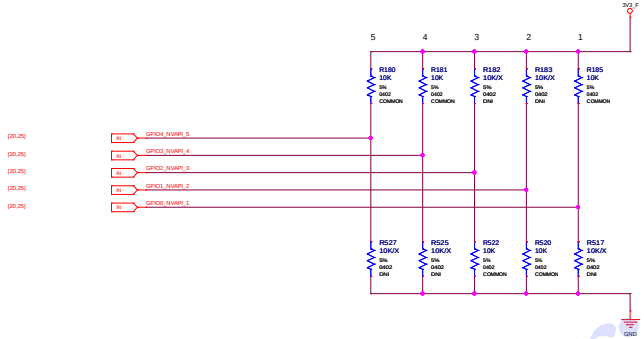

GPIO12_PWR_LVL	GPU SPEED
0	Slow
1	Normal

PEX Input - Power Level/PSI* Control

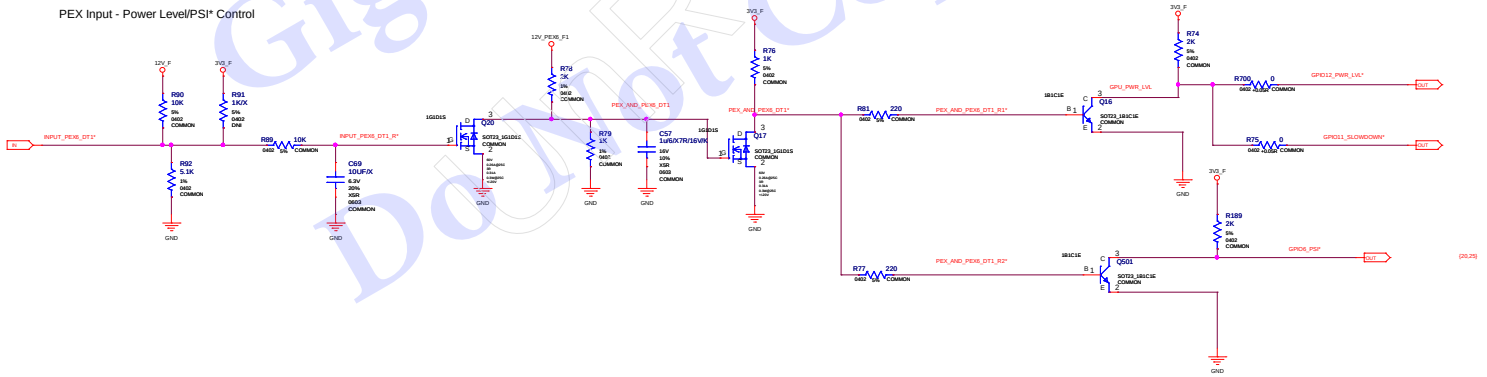

Gigabyte Confidential
DoNotRegistedCopy

ASSEMBLY
PAGE DETAIL

BASE LEVEL GENERIC SCHEMATIC ONLY
PS: NVVDD VID and PSI

ALL NVIDIA DESIGN SPECIFICATIONS, REFERENCE SPECIFICATIONS, REFERENCE BOARDS, FILES, DRAWINGS, DIAGNOSTICS, LISTS AND OTHER DOCUMENTS OR INFORMATION (TOGETHER AND SEPARATELY, "MATERIALS") ARE BEING PROVIDED "AS IS". THE MATERIALS MAY CONTAIN KNOWN AND UNKNOWN VIOLATIONS OR DEVIATIONS OF INDUSTRY STANDARDS AND SPECIFICATIONS. NVIDIA MAKES NO WARRANTIES, EXPRESSED, IMPLIED, STATUTORY OR OTHERWISE WITH RESPECT TO THE MATERIALS OR OTHERWISE, AND EXPRESSLY DISCLAIMS ALL IMPLIED WARRANTIES INCLUDING, WITHOUT LIMITATION, THE WARRANTIES OF DESIGN, OF NONINFRINGEMENT, MERCHANTABILITY OR FITNESS FOR A PARTICULAR PURPOSE, OR ARISING FROM A COURSE OF DEALING, TRADE USAGE, TRADE PRACTICE, OR INDUSTRY STANDARDS.

GIGABYTE

Title: Table of Contents

Size: Custom | Document Number: GV-N660WF2-2GD | Rev: 1.0

Date: Wednesday, October 24, 2012 | Sheet 24 of 31

PS: NVVDD
2/3/4 PHASE DESIGN

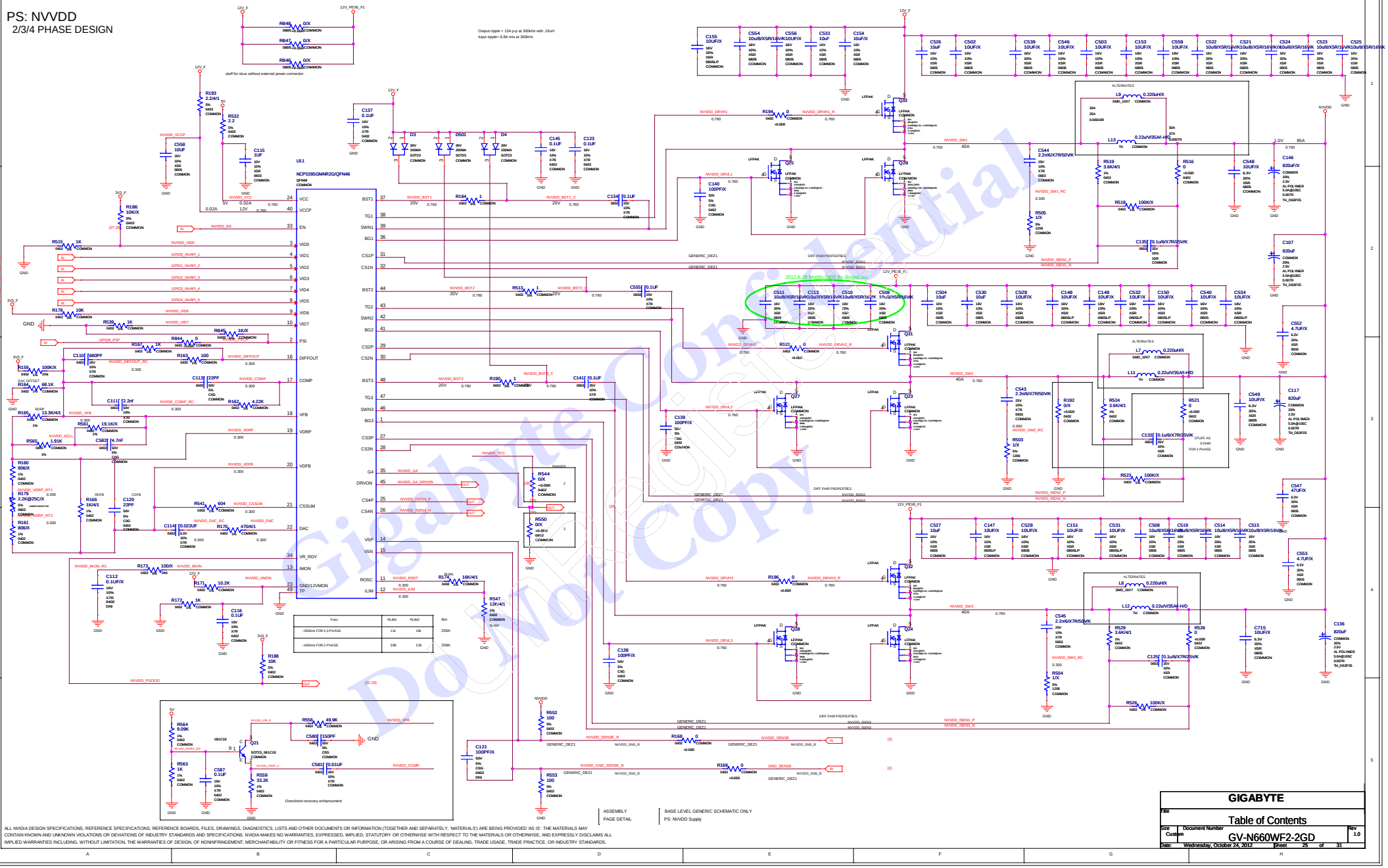

ALL NVIDIA DESIGN SPECIFICATIONS, REFERENCE SPECIFICATIONS, REFERENCE BOARDS, FILES, DRAWINGS, DIAGNOSTICS, LISTS AND OTHER DOCUMENTS OR INFORMATION (TOGETHER AND SEPARATELY, 'MATERIALS') ARE BEING PROVIDED 'AS IS'. THE MATERIALS MAY CONTAIN KNOWN AND UNKNOWN VIOLATIONS OR DEVIATIONS OF INDUSTRY STANDARDS AND SPECIFICATIONS. NVIDIA MAKES NO WARRANTIES, EXPRESSED, IMPLIED, STATUTORY OR OTHERWISE WITH RESPECT TO THE MATERIALS OR OTHERWISE, AND EXPRESSLY DISCLAIMS ALL IMPLIED WARRANTIES INCLUDING, WITHOUT LIMITATION, THE WARRANTIES OF DESIGN, OF NONINFRINGEMENT, MERCHANTABILITY OR FITNESS FOR A PARTICULAR PURPOSE, OR ARISING FROM A COURSE OF DEALING, TRADE USAGE, TRADE PRACTICE, OR INDUSTRY STANDARDS.

ASSEMBLY
PAGE DETAIL

BASE LEVEL GENERIC SCHEMATIC ONLY
PS: NVDD Supply

Gigabyte Confidential
Do Not Copy

GIGABYTE

Title: Table of Contents

Size: Custom | Document Number: GV-N660WF2-2GD | Rev: 1.0

Date: Wednesday, October 24, 2012 | Sheet 25 of 31

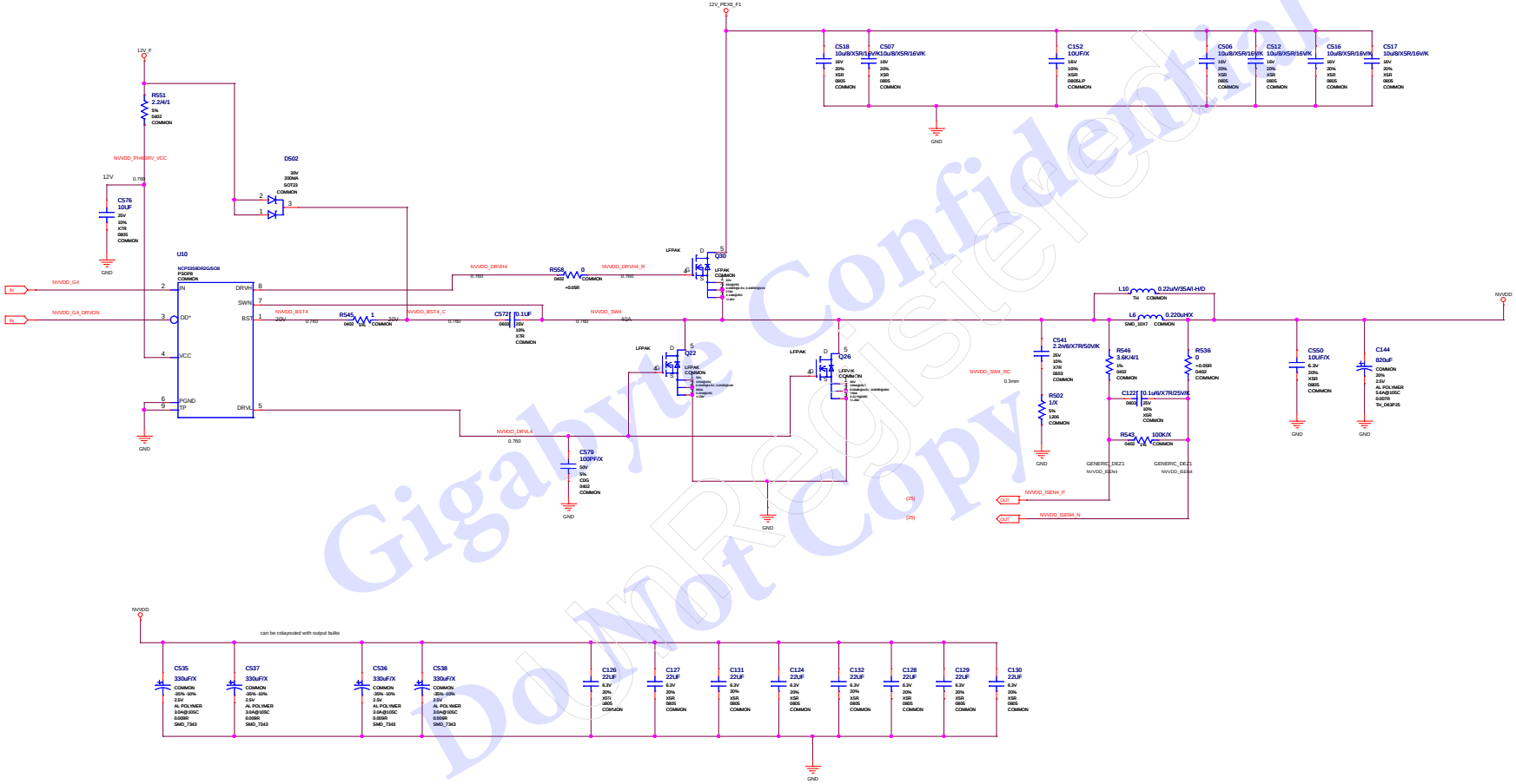

Gigabyte Confidential
Do Not Copy
Do Not Register

ASSEMBLY
PAGE DETAIL

BASE LEVEL GENERIC SCHEMATIC ONLY
PS: NVDD Phase4

ALL NVIDIA DESIGN SPECIFICATIONS, REFERENCE SPECIFICATIONS, REFERENCE BOARDS, FILES, DRAWINGS, DIAGNOSTICS, LISTS AND OTHER DOCUMENTS OR INFORMATION (TOGETHER AND SEPARATELY, 'MATERIALS') ARE BEING PROVIDED 'AS IS'. THE MATERIALS MAY CONTAIN KNOWN AND UNKNOWN VIOLATIONS OR DEVIATIONS OF INDUSTRY STANDARDS AND SPECIFICATIONS. NVIDIA MAKES NO WARRANTIES, EXPRESSED, IMPLIED, STATUTORY OR OTHERWISE WITH RESPECT TO THE MATERIALS OR OTHERWISE, AND EXPRESSLY DISCLAIMS ALL IMPLIED WARRANTIES INCLUDING, WITHOUT LIMITATION, THE WARRANTIES OF DESIGN, OF NONINFRINGEMENT, MERCHANTABILITY OR FITNESS FOR A PARTICULAR PURPOSE, OR ARISING FROM A COURSE OF DEALING, TRADE USAGE, TRADE PRACTICE, OR INDUSTRY STANDARDS.

GIGABYTE	
Title	Table of Contents
Size: Custom	Document Number: GV-N660WF2-2GD
Rev: 1.0	
Date: Wednesday, October 24, 2012	Sheet 26 of 31

PS: Inputs, Filtering, and Monitoring

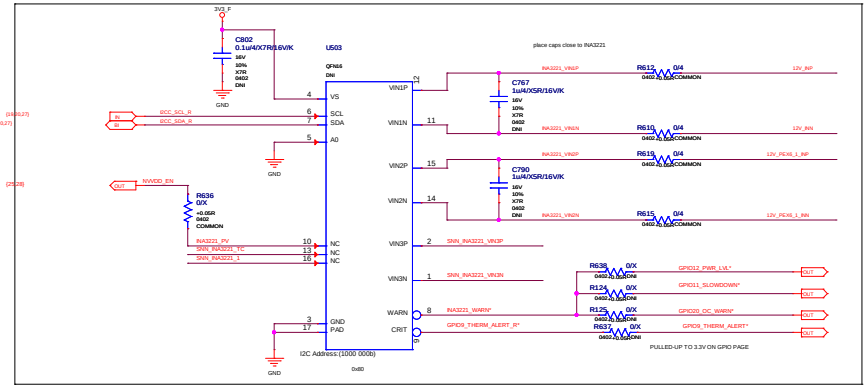

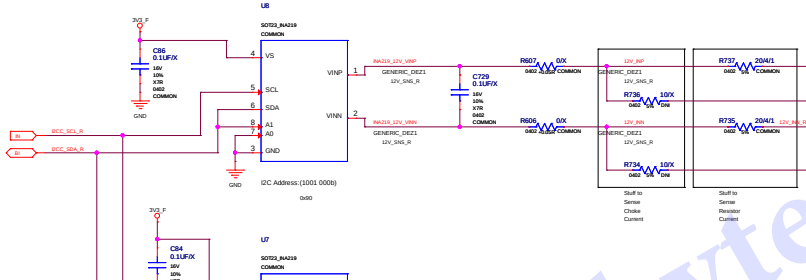

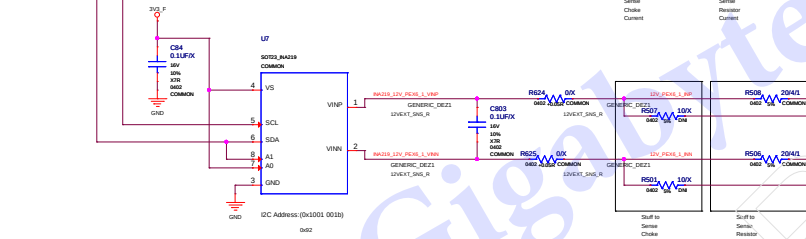

PEX 3V3 INPUT - 10W

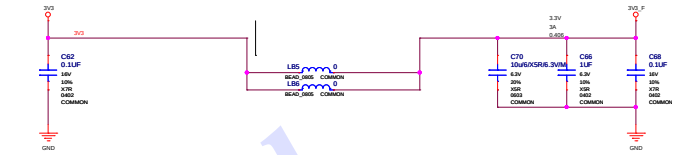

PEX_12V INPUT - 66W

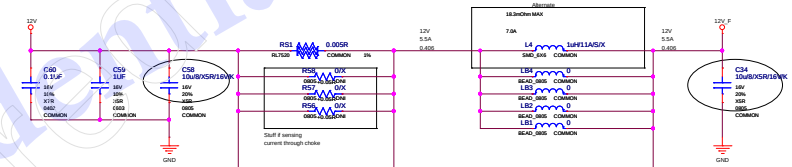

PEX6 INPUT 1 - 2x3 PCIE CON 75W

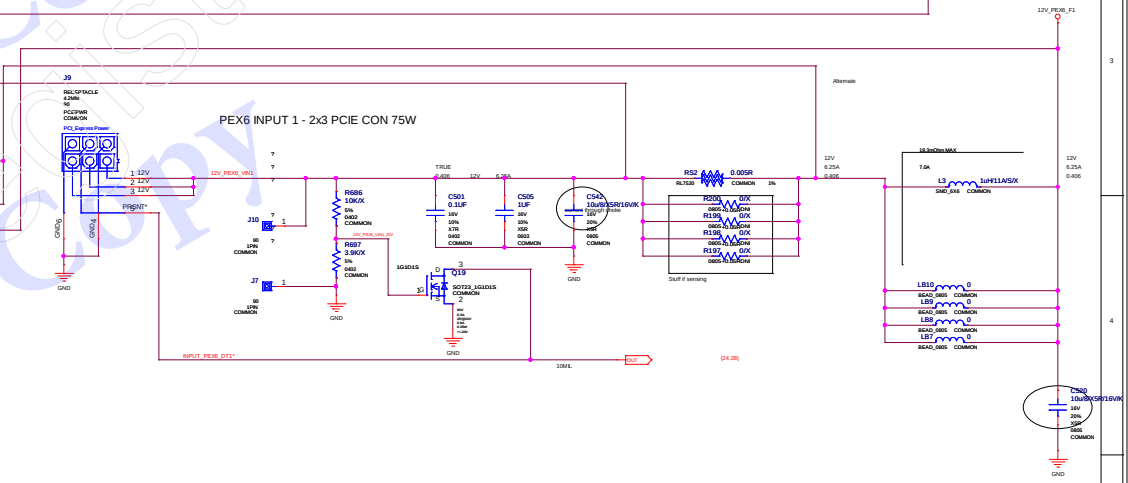

Gigabyte Confidential
Do Not Copy

ASSEMBLY
PAGE DETAIL

BASE LEVEL GENERIC SCHEMATIC ONLY
PS: Inputs, Filtering, and Monitoring

ALL NVIDIA DESIGN SPECIFICATIONS, REFERENCE SPECIFICATIONS, REFERENCE BOARDS, FILES, DRAWINGS, DIAGNOSTICS, LISTS AND OTHER DOCUMENTS OR INFORMATION (TOGETHER AND SEPARATELY, "MATERIALS") ARE BEING PROVIDED "AS IS". THE MATERIALS MAY CONTAIN KNOWN AND UNKNOWN VIOLATIONS OR DEVIATIONS OF INDUSTRY STANDARDS AND SPECIFICATIONS. NVIDIA MAKES NO WARRANTIES, EXPRESSED, IMPLIED, STATUTORY OR OTHERWISE WITH RESPECT TO THE MATERIALS OR OTHERWISE, AND EXPRESSLY DISCLAIMS ALL IMPLIED WARRANTIES INCLUDING, WITHOUT LIMITATION, THE WARRANTIES OF DESIGN, OF NONINFRINGEMENT, MERCHANTABILITY OR FITNESS FOR A PARTICULAR PURPOSE, OR ARISING FROM A COURSE OF DEALING, TRADE USAGE, TRADE PRACTICE, OR INDUSTRY STANDARDS.

GIGABYTE

Title: Table of Contents

Size	Document Number	Rev
Custom	GV-N660WF2-2GD	1.0

Date: Wednesday, October 24, 2012 Sheet 27 of 31

PS: Shutdown

THERM OVERT SHUTDOWN LATCH

IFP_IOVDD (backdrive prevention)

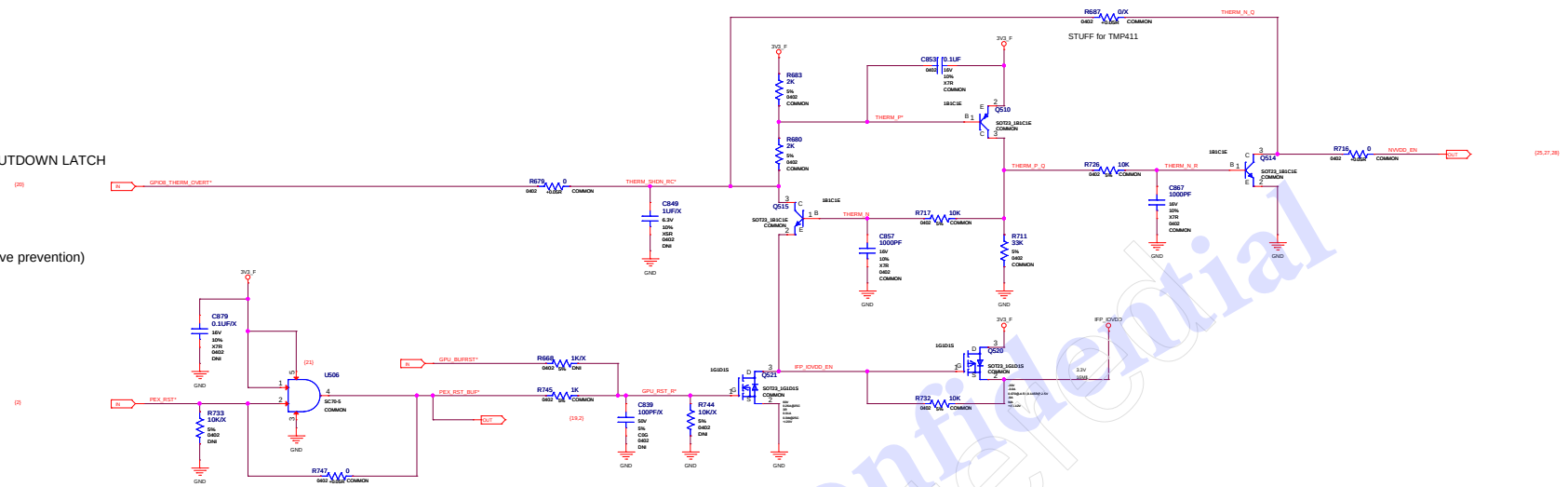

POWER CONNECTOR HPD

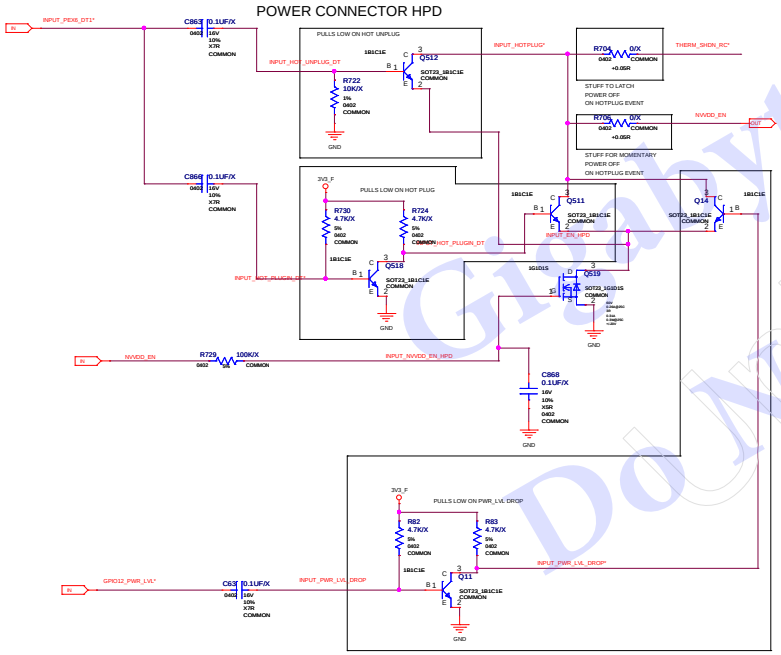

PEX Input - NVVDD Power Sequence

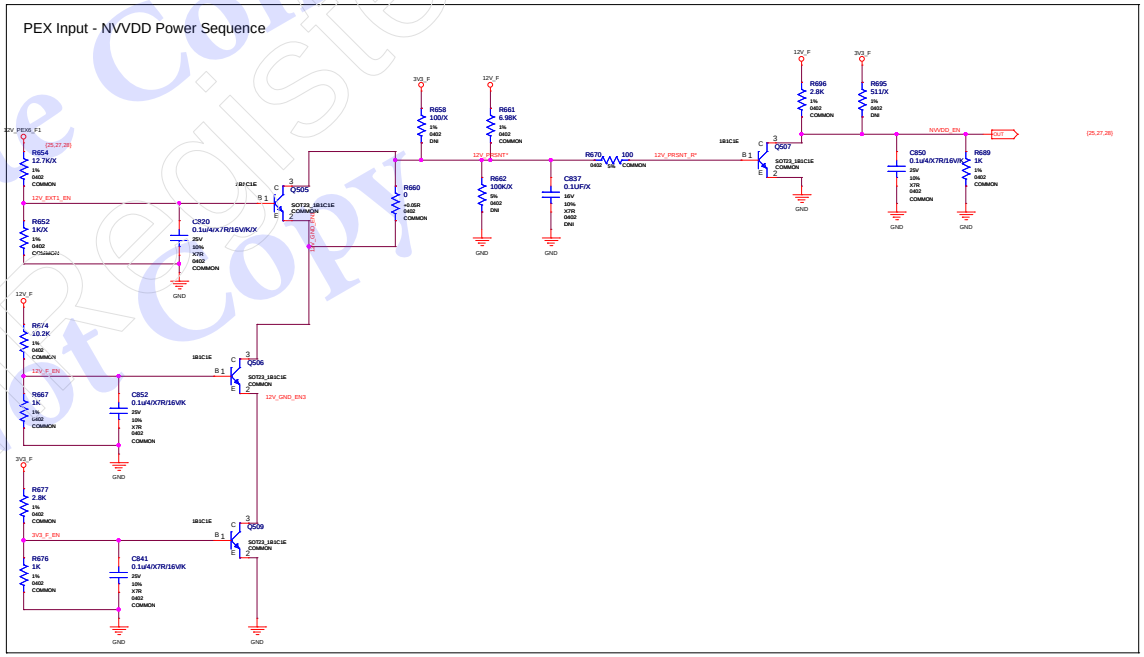

Gigabyte Confidential
Do Not Redistribute
Do Not Copy

ASSEMBLY
PAGE DETAIL

BASE LEVEL GENERIC SCHEMATIC ONLY
PS: Shutdown

ALL NVIDIA DESIGN SPECIFICATIONS, REFERENCE SPECIFICATIONS, REFERENCE BOARDS, FILES, DRAWINGS, DIAGNOSTICS, LISTS AND OTHER DOCUMENTS OR INFORMATION (TOGETHER AND SEPARATELY, "MATERIALS") ARE BEING PROVIDED "AS IS". THE MATERIALS MAY CONTAIN KNOWN AND UNKNOWN VIOLATIONS OR DEVIATIONS OF INDUSTRY STANDARDS AND SPECIFICATIONS. NVIDIA MAKES NO WARRANTIES, EXPRESSED, IMPLIED, STATUTORY OR OTHERWISE WITH RESPECT TO THE MATERIALS OR OTHERWISE, AND EXPRESSLY DISCLAIMS ALL IMPLIED WARRANTIES INCLUDING, WITHOUT LIMITATION, THE WARRANTIES OF DESIGN, OF NONINFRINGEMENT, MERCHANTABILITY OR FITNESS FOR A PARTICULAR PURPOSE, OR ARISING FROM A COURSE OF DEALING, TRADE USAGE, TRADE PRACTICE, OR INDUSTRY STANDARDS.

GIGABYTE		
Title: Table of Contents		
Size: Custom	Document Number: GV-N660WF2-2GD	Rev: 1.0
Date: Wednesday, October 24, 2012	Sheet 28 of 31	

PS: Board LED

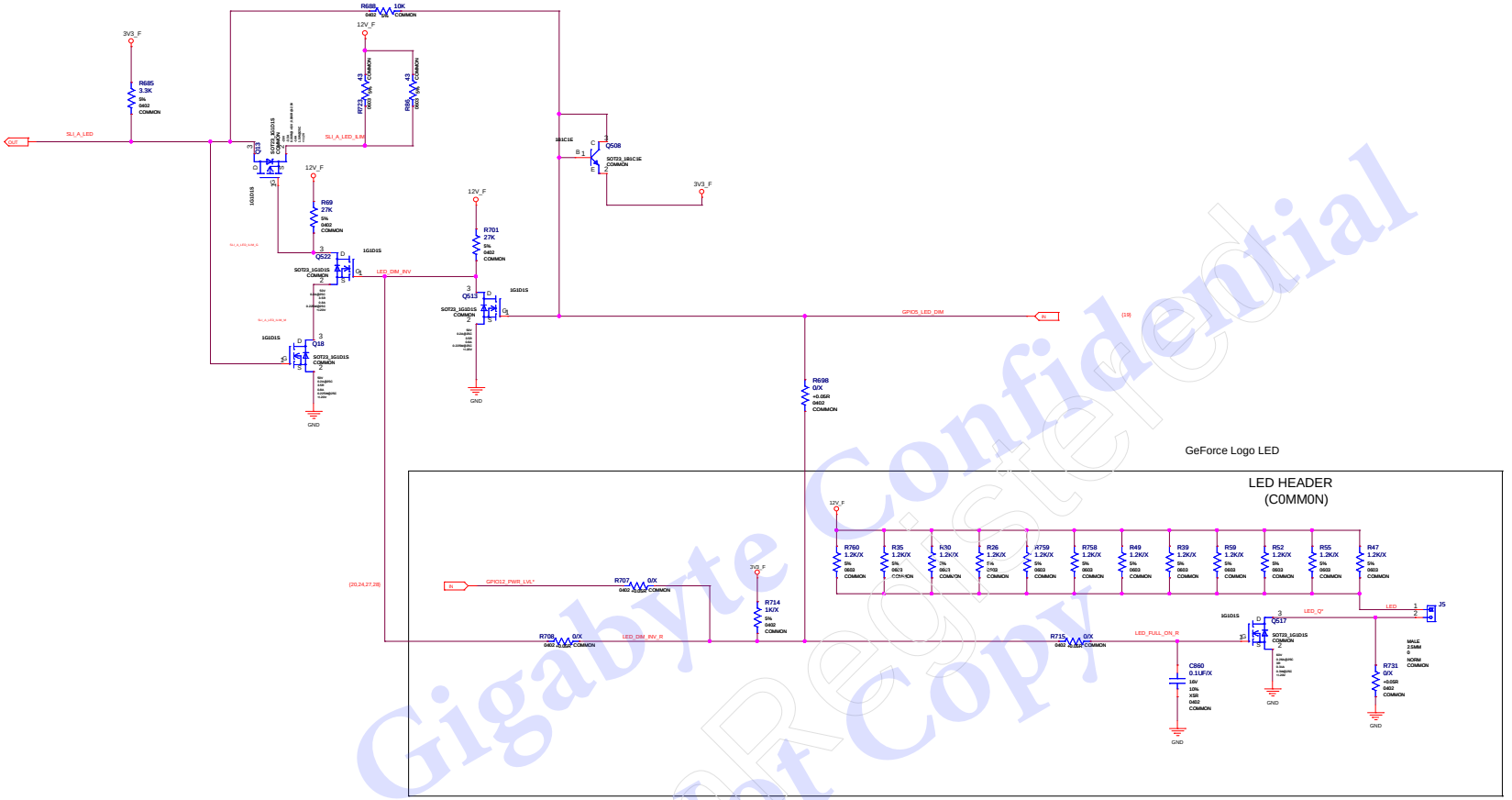

Gigabyte Confidential
Do Not Copy

ASSEMBLY
PAGE DETAIL

BASE LEVEL GENERIC SCHEMATIC ONLY
PS: Board LED; Lighted SLI LED

ALL NVIDIA DESIGN SPECIFICATIONS, REFERENCE SPECIFICATIONS, REFERENCE BOARDS, FILES, DRAWINGS, DIAGNOSTICS, LISTS AND OTHER DOCUMENTS OR INFORMATION (TOGETHER AND SEPARATELY, 'MATERIALS') ARE BEING PROVIDED 'AS IS'. THE MATERIALS MAY CONTAIN KNOWN AND UNKNOWN VIOLATIONS OR DEVIATIONS OF INDUSTRY STANDARDS AND SPECIFICATIONS. NVIDIA MAKES NO WARRANTIES, EXPRESSED, IMPLIED, STATUTORY OR OTHERWISE WITH RESPECT TO THE MATERIALS OR OTHERWISE, AND EXPRESSLY DISCLAIMS ALL IMPLIED WARRANTIES INCLUDING, WITHOUT LIMITATION, THE WARRANTIES OF DESIGN, OF NONINFRINGEMENT, MERCHANTABILITY OR FITNESS FOR A PARTICULAR PURPOSE, OR ARISING FROM A COURSE OF DEALING, TRADE USAGE, TRADE PRACTICE, OR INDUSTRY STANDARDS.

GIGABYTE		
Title: Table of Contents		
Size: Custom	Document Number: GV-N660WF2-2GD	Rev: 1.0
Date: Wednesday, October 24, 2012	Sheet 29 of 31	

Mechanical: Bracket/Thermal Solution

Bracket:

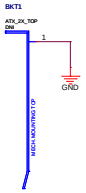

Bracket Screw

Hockey Stick

Mechanical Holes Symbol

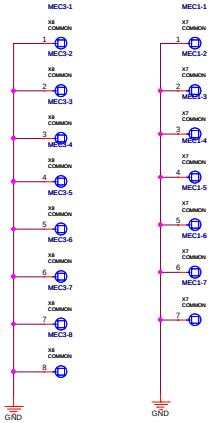

Gigabyte Confidential
Do Not Copy
DoNotRegister

ASSEMBLY
PAGE DETAIL

BASE LEVEL GENERIC SCHEMATIC ONLY
MECH: Bracket/Thermal

ALL NVIDIA DESIGN SPECIFICATIONS, REFERENCE SPECIFICATIONS, REFERENCE BOARDS, FILES, DRAWINGS, DIAGNOSTICS, LISTS AND OTHER DOCUMENTS OR INFORMATION (TOGETHER AND SEPARATELY, 'MATERIALS') ARE BEING PROVIDED 'AS IS'. THE MATERIALS MAY CONTAIN KNOWN AND UNKNOWN VIOLATIONS OR DEVIATIONS OF INDUSTRY STANDARDS AND SPECIFICATIONS. NVIDIA MAKES NO WARRANTIES, EXPRESSED, IMPLIED, STATUTORY OR OTHERWISE WITH RESPECT TO THE MATERIALS OR OTHERWISE, AND EXPRESSLY DISCLAIMS ALL IMPLIED WARRANTIES INCLUDING, WITHOUT LIMITATION, THE WARRANTIES OF DESIGN, OF NONINFRINGEMENT, MERCHANTABILITY OR FITNESS FOR A PARTICULAR PURPOSE, OR ARISING FROM A COURSE OF DEALING, TRADE USAGE, TRADE PRACTICE, OR INDUSTRY STANDARDS.

GIGABYTE		
Title: Table of Contents		
Size: Custom	Document Number: GV-N660WF2-2GD	Rev: 1.0
Date: Wednesday, October 24, 2012	Sheet 30 of 31	

Straps, Thermal, Mechanical

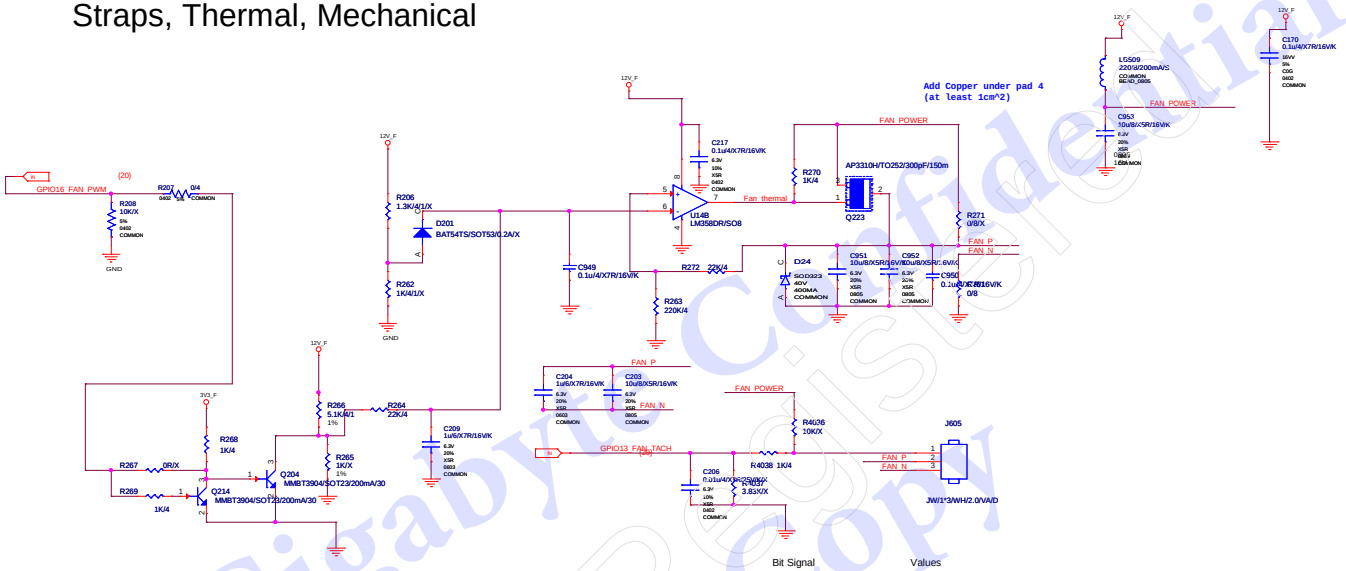

Gigabyte Confidential
Do Not Copy

GIGABYTE		
Title: Table of Contents		
Size: Custom	Document Number: GV-N660WF2-2GD	Rev: 1.0
Date: Wednesday, October 24, 2012	Sheet 31 of 31	