P1071: GF108, 1024MB x16 DDR3, DVI+HDMI+VGA

Page 1: Overview
Page 2: Board Block Diagram
Page 3: PCI Express Interface
Page 4: GPU Frame Buffer
Page 5: FBA Partition
Page 6: FBB Partition
Page 7: Memory Decoupling
Page 8: DACA VGA
Page 9: DACB VGA Header
Page 10: TMDS Interface
Page 11: HDMI Interface
Page 12: Unused Interfaces, NVVDD Decoupling
Page 13: XTAL, ROM, JTAG, Misc
Page 14: Straps, Thermal, Mechanical
Page 15: Power Supply I: Misc Power, Thermal Shutdown
Page 16: Power Supply II: FBVDDQ
Page 17: Power Supply III: NVVDD

00073469 FOR MSI 楊婉菲 CONFIDENTIAL RD(C)20111090001 RMA(丁德基) ONLY

BRD	VARIANT	NVPN	ASSEMBLY
B	BASE	600-11071-BASE-SCH	BASE LEVEL GENERIC SCHEMATIC ONLY, COMMON & NO_STUFF ASSEMBLY NOTES AND BOM NOT FINAL
1	SKU0000	600-11071-0000-000	GF108-320-A1 600/1200/900MHz 1024MB/128bit DDR3, DVI-DL+HDMI+VGA
2	SKU0001	600-11071-0001-000	GF108-300-A1 625/1250/900MHz 1024MB/128bit DDR3, DVI-DL+HDMI+VGA
3	SKU0002	600-11071-0002-000	GF108-200-A1 650/1300/900MHz 1024MB/128bit DDR3, DVI-DL+HDMI+VGA
4	<UNDEFINED>	<UNDEFINED>	<UNDEFINED>
5	<UNDEFINED>	<UNDEFINED>	<UNDEFINED>
6	<UNDEFINED>	<UNDEFINED>	<UNDEFINED>
7	<UNDEFINED>	<UNDEFINED>	<UNDEFINED>
8	<UNDEFINED>	<UNDEFINED>	<UNDEFINED>
9	<UNDEFINED>	<UNDEFINED>	<UNDEFINED>
10	<UNDEFINED>	<UNDEFINED>	<UNDEFINED>
11	<UNDEFINED>	<UNDEFINED>	<UNDEFINED>
12	<UNDEFINED>	<UNDEFINED>	<UNDEFINED>
13	<UNDEFINED>	<UNDEFINED>	<UNDEFINED>
14	<UNDEFINED>	<UNDEFINED>	<UNDEFINED>
15	<UNDEFINED>	<UNDEFINED>	<UNDEFINED>

ASSEMBLY	BASE LEVEL GENERIC SCHEMATIC ONLY, COMMON & NO_STUFF ASSEMBLY NOTES AND BOM NOT FINAL
PAGE DETAIL	Overview

ALL NVIDIA DESIGN SPECIFICATIONS, REFERENCE SPECIFICATIONS, REFERENCE BOARDS, FILES, DRAWINGS, DIAGNOSTICS, LISTS AND OTHER DOCUMENTS OR INFORMATION (TOGETHER AND SEPARATELY, 'MATERIALS') ARE BEING PROVIDED 'AS IS'. THE MATERIALS MAY CONTAIN KNOWN AND UNKNOWN VIOLATIONS OR DEVIATIONS OF INDUSTRY STANDARDS AND SPECIFICATIONS. NVIDIA MAKES NO WARRANTIES, EXPRESSED, IMPLIED, STATUTORY OR OTHERWISE WITH RESPECT TO THE MATERIALS OR OTHERWISE, AND EXPRESSLY DISCLAIMS ALL IMPLIED WARRANTIES INCLUDING, WITHOUT LIMITATION, THE WARRANTIES OF DESIGN, OF NONINFRINGEMENT, MERCHANTABILITY OR FITNESS FOR A PARTICULAR PURPOSE, OR ARISING FROM A COURSE OF DEALING, TRADE USAGE, TRADE PRACTICE, OR INDUSTRY STANDARDS.

NVIDIA CORPORATION
2701 SAN TOMAS EXPRESSWAY
SANTA CLARA, CA 95050, USA

NV_PN	600-11071-BASE-SCH		
PCB REV	P1071-A00	PAGE	
BOM REV	A	DATE	10-FEB-2010

Block Diagram

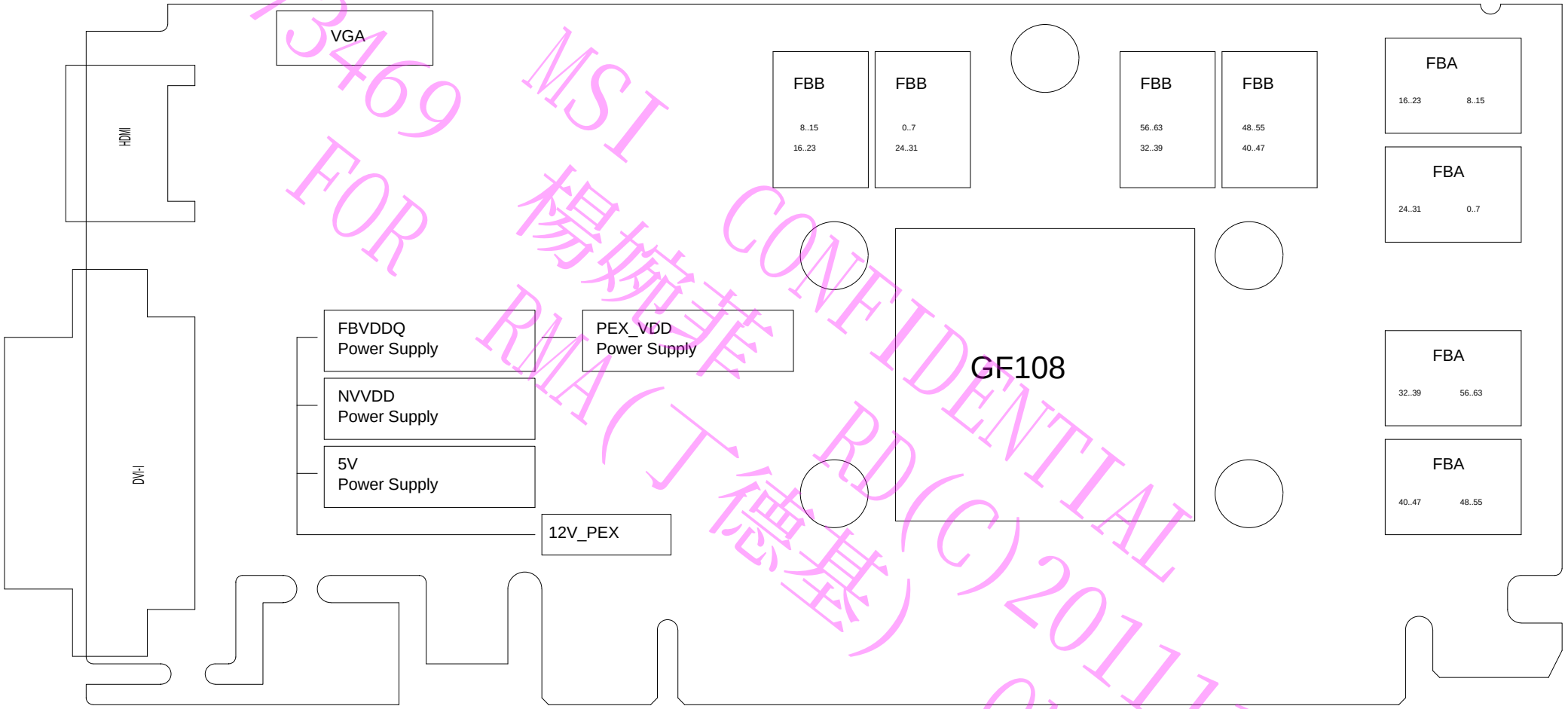

00073469 FOR MSI 杨婉菲 CONFIDENTIAL RMA(丁德基) RD(C)20111109001 ONLY

ASSEMBLY	BASE LEVEL GENERIC SCHEMATIC ONLY, COMMON & NO_STUFF ASSEMBLY NOTES AND BOM NOT FINAL
PAGE DETAIL	Board Block Diagram

ALL NVIDIA DESIGN SPECIFICATIONS, REFERENCE SPECIFICATIONS, REFERENCE BOARDS, FILES, DRAWINGS, DIAGNOSTICS, LISTS AND OTHER DOCUMENTS OR INFORMATION (TOGETHER AND SEPARATELY, "MATERIALS") ARE BEING PROVIDED 'AS IS'. THE MATERIALS MAY CONTAIN KNOWN AND UNKNOWN VIOLATIONS OR DEVIATIONS OF INDUSTRY STANDARDS AND SPECIFICATIONS. NVIDIA MAKES NO WARRANTIES, EXPRESSED, IMPLIED, STATUTORY OR OTHERWISE WITH RESPECT TO THE MATERIALS OR OTHERWISE, AND EXPRESSLY DISCLAIMS ALL IMPLIED WARRANTIES INCLUDING, WITHOUT LIMITATION, THE WARRANTIES OF DESIGN, OF NONINFRINGEMENT, MERCHANTABILITY OR FITNESS FOR A PARTICULAR PURPOSE, OR ARISING FROM A COURSE OF DEALING, TRADE USAGE, TRADE PRACTICE, OR INDUSTRY STANDARDS.

NVIDIA CORPORATION
2701 SAN TOMAS EXPRESSWAY
SANTA CLARA, CA 95050, USA

NV_PN	600-11071-BASE-SCH		
PCB REV	P1071-A00	PAGE	
BOM REV	A	DATE	10-FEB-2010

PCI Express Interface

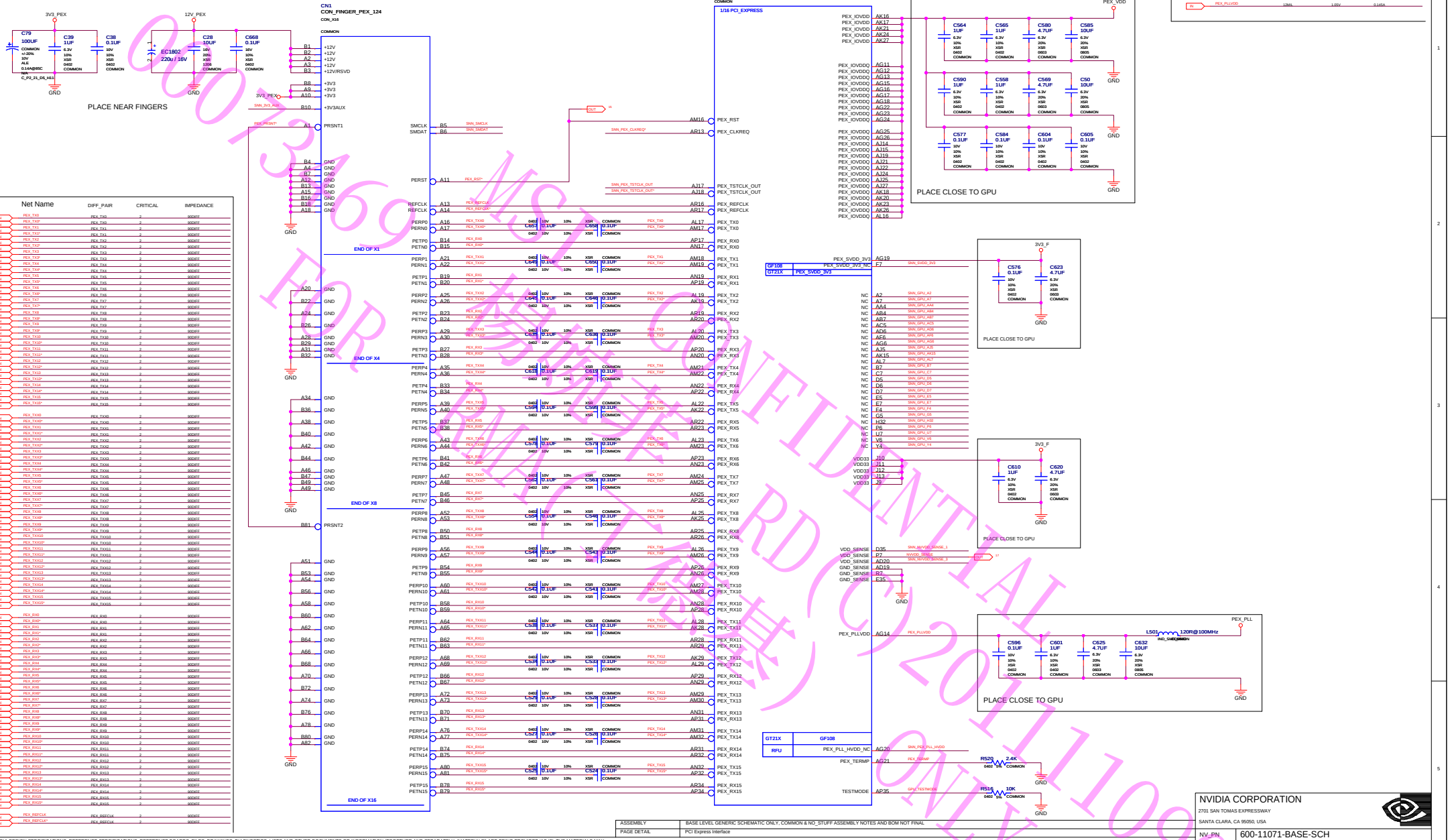

Net Name	DIFF_PAIR	CRITICAL	IMPEDANCE
PEX_TX0	PEX_TX0	2	90OHM
PEX_TX0*	PEX_TX0	2	90OHM
PEX_TX1	PEX_TX1	2	90OHM
PEX_TX1*	PEX_TX1	2	90OHM
PEX_TX2	PEX_TX2	2	90OHM
PEX_TX2*	PEX_TX2	2	90OHM
PEX_TX3	PEX_TX3	2	90OHM
PEX_TX3*	PEX_TX3	2	90OHM
PEX_TX4	PEX_TX4	2	90OHM
PEX_TX4*	PEX_TX4	2	90OHM
PEX_TX5	PEX_TX5	2	90OHM
PEX_TX5*	PEX_TX5	2	90OHM
PEX_TX6	PEX_TX6	2	90OHM
PEX_TX6*	PEX_TX6	2	90OHM
PEX_TX7	PEX_TX7	2	90OHM
PEX_TX7*	PEX_TX7	2	90OHM
PEX_TX8	PEX_TX8	2	90OHM
PEX_TX8*	PEX_TX8	2	90OHM
PEX_TX9	PEX_TX9	2	90OHM
PEX_TX9*	PEX_TX9	2	90OHM
PEX_TX10	PEX_TX10	2	90OHM
PEX_TX10*	PEX_TX10	2	90OHM
PEX_TX11	PEX_TX11	2	90OHM
PEX_TX11*	PEX_TX11	2	90OHM
PEX_TX12	PEX_TX12	2	90OHM
PEX_TX12*	PEX_TX12	2	90OHM
PEX_TX13	PEX_TX13	2	90OHM
PEX_TX13*	PEX_TX13	2	90OHM
PEX_TX14	PEX_TX14	2	90OHM
PEX_TX14*	PEX_TX14	2	90OHM
PEX_TX15	PEX_TX15	2	90OHM
PEX_TX15*	PEX_TX15	2	90OHM
PEX_TX00	PEX_TX00	2	90OHM
PEX_TX00*	PEX_TX00	2	90OHM
PEX_TX01	PEX_TX01	2	90OHM
PEX_TX01*	PEX_TX01	2	90OHM
PEX_TX02	PEX_TX02	2	90OHM
PEX_TX02*	PEX_TX02	2	90OHM
PEX_TX03	PEX_TX03	2	90OHM
PEX_TX03*	PEX_TX03	2	90OHM
PEX_TX04	PEX_TX04	2	90OHM
PEX_TX04*	PEX_TX04	2	90OHM
PEX_TX05	PEX_TX05	2	90OHM
PEX_TX05*	PEX_TX05	2	90OHM
PEX_TX06	PEX_TX06	2	90OHM
PEX_TX06*	PEX_TX06	2	90OHM
PEX_TX07	PEX_TX07	2	90OHM
PEX_TX07*	PEX_TX07	2	90OHM
PEX_TX08	PEX_TX08	2	90OHM
PEX_TX08*	PEX_TX08	2	90OHM
PEX_TX09	PEX_TX09	2	90OHM
PEX_TX09*	PEX_TX09	2	90OHM
PEX_TX010	PEX_TX010	2	90OHM
PEX_TX010*	PEX_TX010	2	90OHM
PEX_TX011	PEX_TX011	2	90OHM
PEX_TX011*	PEX_TX011	2	90OHM
PEX_TX012	PEX_TX012	2	90OHM
PEX_TX012*	PEX_TX012	2	90OHM
PEX_TX013	PEX_TX013	2	90OHM
PEX_TX013*	PEX_TX013	2	90OHM
PEX_TX014	PEX_TX014	2	90OHM
PEX_TX014*	PEX_TX014	2	90OHM
PEX_TX015	PEX_TX015	2	90OHM
PEX_TX015*	PEX_TX015	2	90OHM
PEX_RX0	PEX_RX0	2	90OHM
PEX_RX0*	PEX_RX0	2	90OHM
PEX_RX1	PEX_RX1	2	90OHM
PEX_RX1*	PEX_RX1	2	90OHM
PEX_RX2	PEX_RX2	2	90OHM
PEX_RX2*	PEX_RX2	2	90OHM
PEX_RX3	PEX_RX3	2	90OHM
PEX_RX3*	PEX_RX3	2	90OHM
PEX_RX4	PEX_RX4	2	90OHM
PEX_RX4*	PEX_RX4	2	90OHM
PEX_RX5	PEX_RX5	2	90OHM
PEX_RX5*	PEX_RX5	2	90OHM
PEX_RX6	PEX_RX6	2	90OHM
PEX_RX6*	PEX_RX6	2	90OHM
PEX_RX7	PEX_RX7	2	90OHM
PEX_RX7*	PEX_RX7	2	90OHM
PEX_RX8	PEX_RX8	2	90OHM
PEX_RX8*	PEX_RX8	2	90OHM
PEX_RX9	PEX_RX9	2	90OHM
PEX_RX9*	PEX_RX9	2	90OHM
PEX_RX10	PEX_RX10	2	90OHM
PEX_RX10*	PEX_RX10	2	90OHM
PEX_RX11	PEX_RX11	2	90OHM
PEX_RX11*	PEX_RX11	2	90OHM
PEX_RX12	PEX_RX12	2	90OHM
PEX_RX12*	PEX_RX12	2	90OHM
PEX_RX13	PEX_RX13	2	90OHM
PEX_RX13*	PEX_RX13	2	90OHM
PEX_RX14	PEX_RX14	2	90OHM
PEX_RX14*	PEX_RX14	2	90OHM
PEX_RX15	PEX_RX15	2	90OHM
PEX_RX15*	PEX_RX15	2	90OHM
PEX_REFCLK	PEX_REFCLK	2	90OHM
PEX_REFCLK*	PEX_REFCLK	2	90OHM

Net Name	MIN_WIDTH	VOLTAGE	MAX_CURRENT
PEX_PRSNT*	12MIL		
PEX_TERMP	12MIL		
GPU_TESTMODE	12MIL		
PEX_PLLVDD	12MIL	1.05V	0.145A

ASSEMBLY	BASE LEVEL GENERIC SCHEMATIC ONLY, COMMON & NO_STUFF ASSEMBLY NOTES AND BOM NOT FINAL
PAGE DETAIL	PCI Express Interface

ALL NVIDIA DESIGN SPECIFICATIONS, REFERENCE SPECIFICATIONS, REFERENCE BOARDS, FILES, DRAWINGS, DIAGNOSTICS, LISTS AND OTHER DOCUMENTS OR INFORMATION (TOGETHER AND SEPARATELY, "MATERIALS") ARE BEING PROVIDED "AS IS". THE MATERIALS MAY CONTAIN KNOWN AND UNKNOWN VIOLATIONS OR DEVIATIONS FROM INDUSTRY STANDARDS AND SPECIFICATIONS. NVIDIA MAKES NO WARRANTIES, EXPRESSED, IMPLIED, STATUTORY OR OTHERWISE WITH RESPECT TO THE MATERIALS OR OTHERWISE, AND EXPRESSLY DISCLAIMS ALL IMPLIED WARRANTIES INCLUDING, WITHOUT LIMITATION, THE WARRANTIES OF DESIGN, OF NONINFRINGEMENT, MERCHANTABILITY OR FITNESS FOR A PARTICULAR PURPOSE, OR ARISING FROM A COURSE OF DEALING, TRADE USAGE, TRADE PRACTICE, OR INDUSTRY STANDARDS.

NVIDIA CORPORATION
2701 SAN TOMAS EXPRESSWAY
SANTA CLARA, CA 95050, USA

NV_PN	600-11071-BASE-SCH		
PCB REV	P1071-A00	PAGE	
BOM REV	A	DATE	10-FEB-2010

600369 MSI CONFIDENTIAL FOR RD(C) 2011 09 01 INTERNAL USE ONLY

GPU Frame Buffer

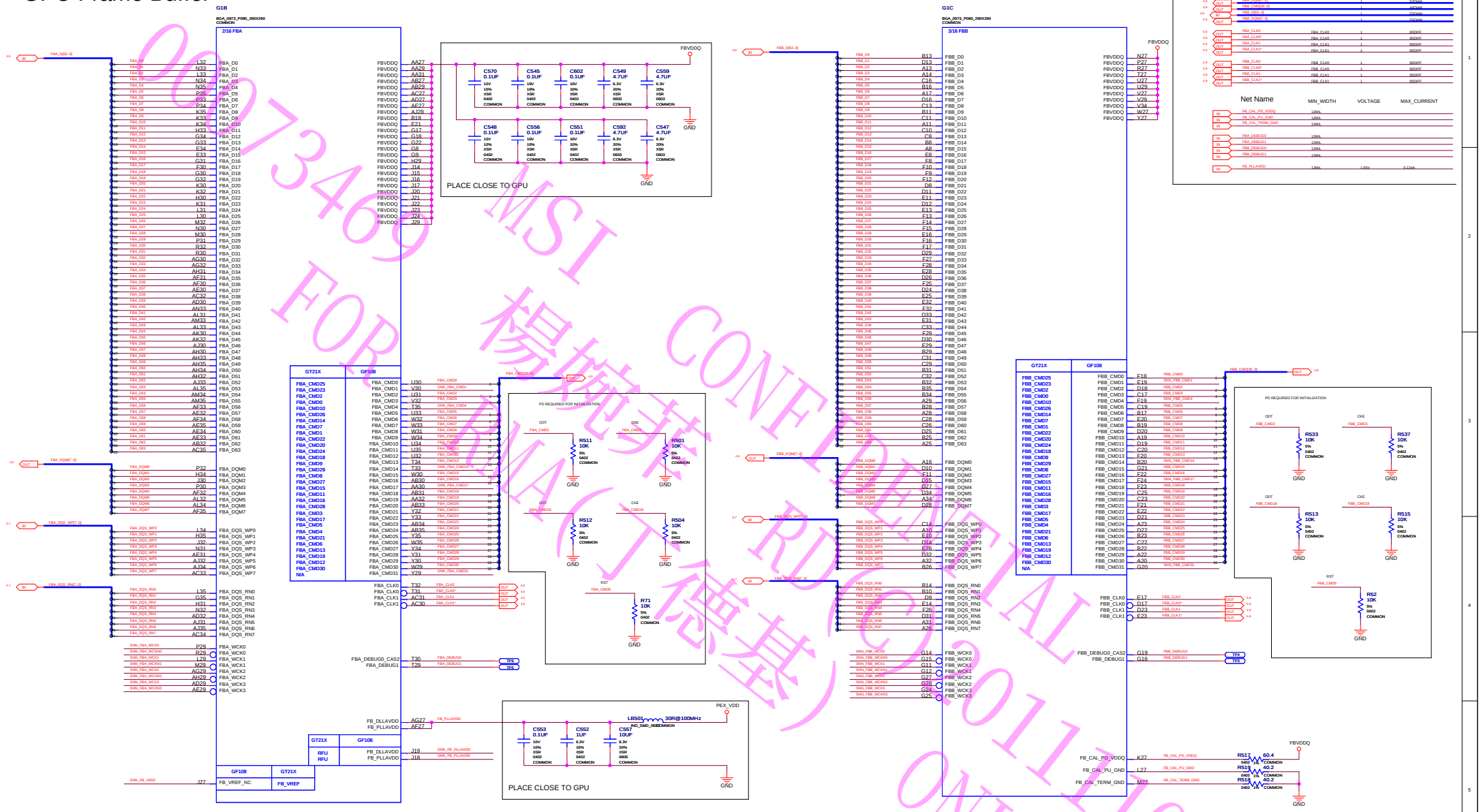

0973469
FOR MSI CONFIDENTIAL
楊梅技術（不得複製）
2011/10/01
ONLY

ASSEMBLY	BASE LEVEL GENERIC SCHEMATIC ONLY, COMMON & NO_STUFF ASSEMBLY NOTES AND BOM NOT FINAL
PAGE DETAIL	GPU Frame Buffer

ALL NVIDIA DESIGN SPECIFICATIONS, REFERENCE SPECIFICATIONS, REFERENCE BOARDS, FILES, DRAWINGS, DIAGNOSTICS, LISTS AND OTHER DOCUMENTS OR INFORMATION (TOGETHER AND SEPARATELY, 'MATERIALS') ARE BEING PROVIDED 'AS IS'. THE MATERIALS MAY CONTAIN KNOWN AND UNKNOWN VIOLATIONS OR DEVIATIONS OF INDUSTRY STANDARDS AND SPECIFICATIONS. NVIDIA MAKES NO WARRANTIES, EXPRESSED, IMPLIED, STATUTORY OR OTHERWISE WITH RESPECT TO THE MATERIALS OR OTHERWISE, AND EXPRESSLY DISCLAIMS ALL IMPLIED WARRANTIES INCLUDING, WITHOUT LIMITATION, THE WARRANTIES OF DESIGN, OF NONINFRINGEMENT, MERCHANTABILITY OR FITNESS FOR A PARTICULAR PURPOSE, OR ARISING FROM A COURSE OF DEALING, TRADE USAGE, TRADE PRACTICE, OR INDUSTRY STANDARDS.

NVIDIA CORPORATION
2701 SAN TOMAS EXPRESSWAY
SANTA CLARA, CA 95050, USA

NV_PN	600-11071-BASE-SCH		
PCB REV	P1071-A00	PAGE	
BOM REV	A	DATE	10-FEB-2010

FBA Partition

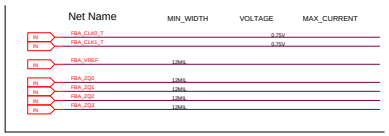

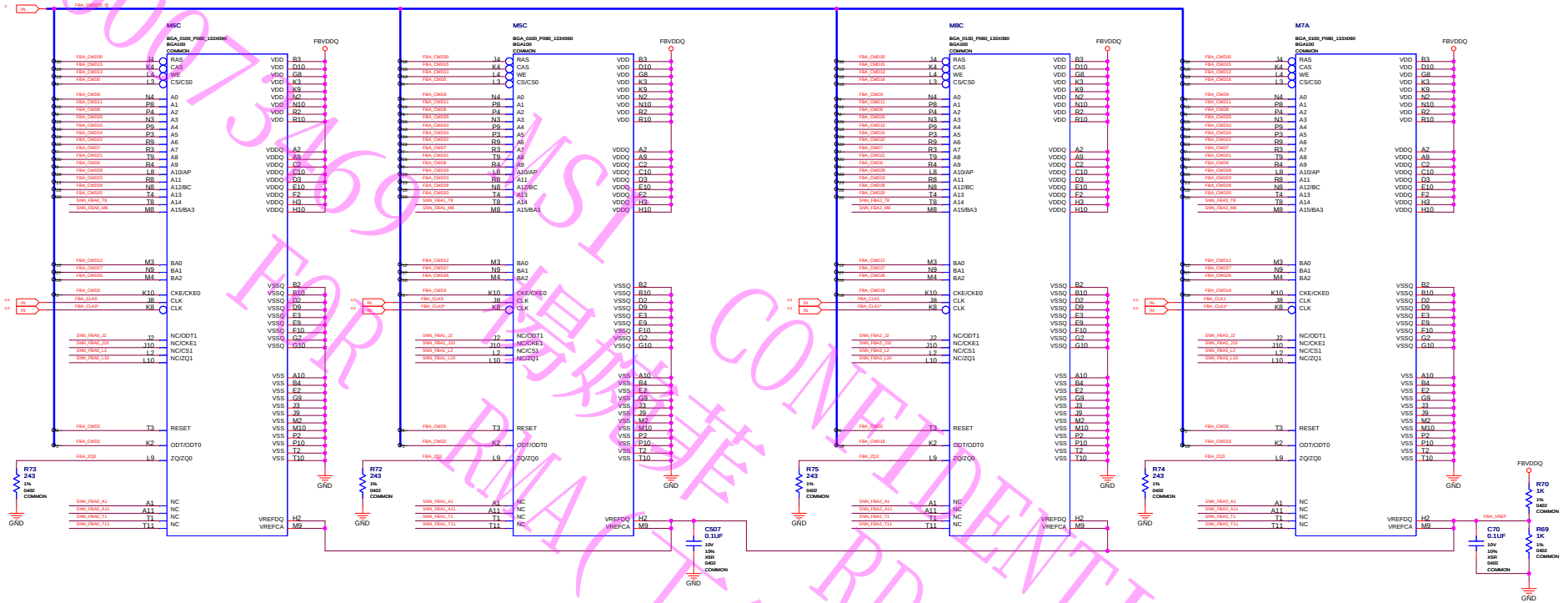

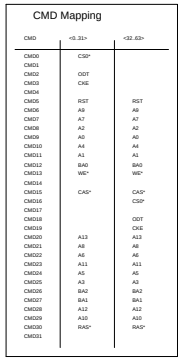

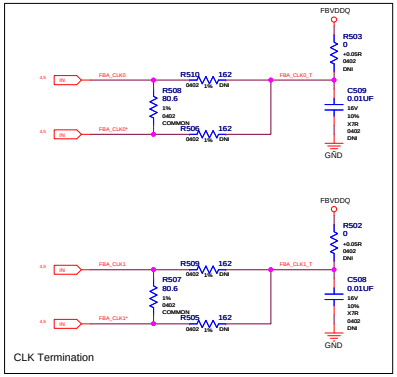

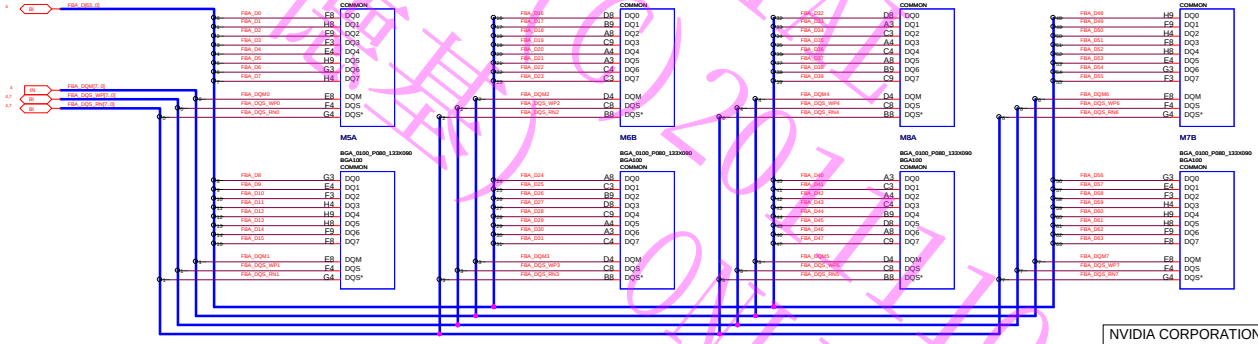

ASSEMBLY	BASE LEVEL GENERIC SCHEMATIC ONLY, COMMON & NO_STUFF ASSEMBLY NOTES AND BOM NOT FINAL
PAGE DETAIL	FBA Partition

ALL NVIDIA DESIGN SPECIFICATIONS, REFERENCE SPECIFICATIONS, REFERENCE BOARDS, FILES, DRAWINGS, DIAGNOSTICS, LISTS AND OTHER DOCUMENTS OR INFORMATION (TOGETHER AND SEPARATELY, "MATERIALS") ARE BEING PROVIDED 'AS IS'. THE MATERIALS MAY CONTAIN KNOWN AND UNKNOWN VIOLATIONS OR DEVIATIONS OF INDUSTRY STANDARDS AND SPECIFICATIONS. NVIDIA MAKES NO WARRANTIES, EXPRESSED, IMPLIED, STATUTORY OR OTHERWISE WITH RESPECT TO THE MATERIALS OR OTHERWISE, AND EXPRESSLY DISCLAIMS ALL IMPLIED WARRANTIES INCLUDING, WITHOUT LIMITATION, THE WARRANTIES OF DESIGN, OF NONINFRINGEMENT, MERCHANTABILITY OR FITNESS FOR A PARTICULAR PURPOSE, OR ARISING FROM A COURSE OF DEALING, TRADE USAGE, TRADE PRACTICE, OR INDUSTRY STANDARDS.

NVIDIA CORPORATION
2701 SAN TOMAS EXPRESSWAY
SANTA CLARA, CA 95050, USA

NV_PN	600-11071-BASE-SCH		
PCB REV	P1071-A00	PAGE	
BOM REV	A	DATE	10-FEB-2010

00713691 SMSI 信维通信 CONFIDENTIAL FOR RMA 工程 RD ONLY ISO9001

FBB Partition

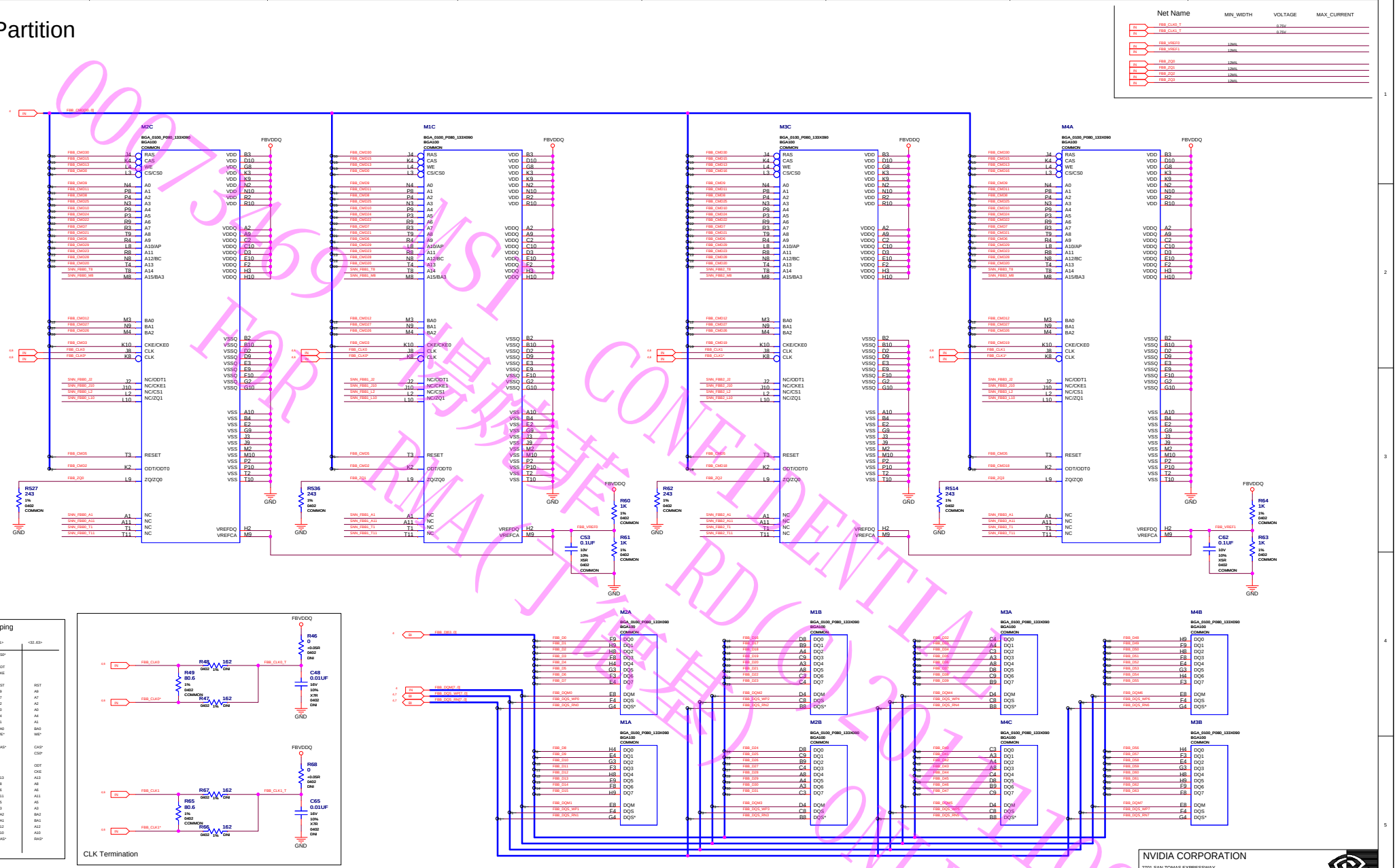

ASSEMBLY	BASE LEVEL GENERIC SCHEMATIC ONLY, COMMON & NO_STUFF ASSEMBLY NOTES AND BOM NOT FINAL
PAGE DETAIL	FBB Partition

ALL NVIDIA DESIGN SPECIFICATIONS, REFERENCE SPECIFICATIONS, REFERENCE BOARDS, FILES, DRAWINGS, DIAGNOSTICS, LISTS AND OTHER DOCUMENTS OR INFORMATION (TOGETHER AND SEPARATELY, 'MATERIALS') ARE BEING PROVIDED 'AS IS'. THE MATERIALS MAY CONTAIN KNOWN AND UNKNOWN VIOLATIONS OR DEVIATIONS OF INDUSTRY STANDARDS AND SPECIFICATIONS. NVIDIA MAKES NO WARRANTIES, EXPRESSED, IMPLIED, STATUTORY OR OTHERWISE WITH RESPECT TO THE MATERIALS OR OTHERWISE, AND EXPRESSLY DISCLAIMS ALL IMPLIED WARRANTIES INCLUDING, WITHOUT LIMITATION, THE WARRANTIES OF DESIGN, OF NONINFRINGEMENT, MERCHANTABILITY OR FITNESS FOR A PARTICULAR PURPOSE, OR ARISING FROM A COURSE OF DEALING, TRADE USAGE, TRADE PRACTICE, OR INDUSTRY STANDARDS.

NVIDIA CORPORATION
2701 SAN TOMAS EXPRESSWAY
SANTA CLARA, CA 95050, USA

NV_PN	600-11071-BASE-SCH		
PCB REV	P1071-A00	PAGE	
BOM REV	A	DATE	10-FEB-2010

00013469 NCI CONFIDENTIAL
FOR NMA(T) 修改 RD(C) 2011/09/01
FOR NMA(T) 修改 RD(C) 2011/09/01

Memory Decoupling

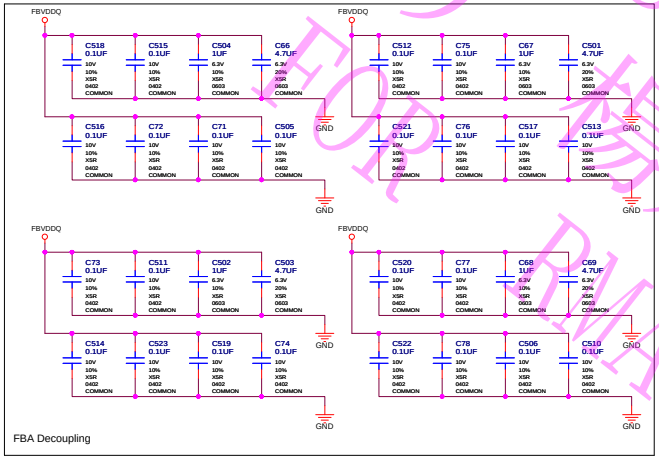

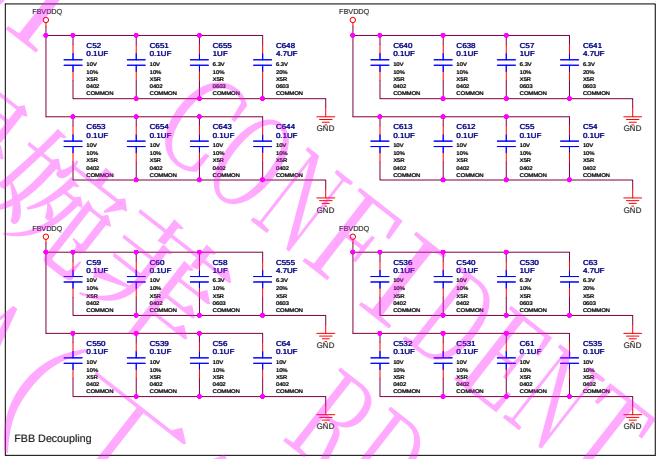

00073469 MSI 仅供 RMA 维修使用 CONFIDENTIAL RD(C)20111109001 ONLY

ASSEMBLY	BASE LEVEL GENERIC SCHEMATIC ONLY, COMMON & NO_STUFF ASSEMBLY NOTES AND BOM NOT FINAL
PAGE DETAIL	Memory Decoupling

ALL NVIDIA DESIGN SPECIFICATIONS, REFERENCE SPECIFICATIONS, REFERENCE BOARDS, FILES, DRAWINGS, DIAGNOSTICS, LISTS AND OTHER DOCUMENTS OR INFORMATION (TOGETHER AND SEPARATELY, 'MATERIALS') ARE BEING PROVIDED 'AS IS'. THE MATERIALS MAY CONTAIN KNOWN AND UNKNOWN VIOLATIONS OR DEVIATIONS OF INDUSTRY STANDARDS AND SPECIFICATIONS. NVIDIA MAKES NO WARRANTIES, EXPRESSED, IMPLIED, STATUTORY OR OTHERWISE WITH RESPECT TO THE MATERIALS OR OTHERWISE, AND EXPRESSLY DISCLAIMS ALL IMPLIED WARRANTIES INCLUDING, WITHOUT LIMITATION, THE WARRANTIES OF DESIGN, OF NONINFRINGEMENT, MERCHANTABILITY OR FITNESS FOR A PARTICULAR PURPOSE, OR ARISING FROM A COURSE OF DEALING, TRADE USAGE, TRADE PRACTICE, OR INDUSTRY STANDARDS.

NVIDIA CORPORATION
2701 SAN TOMAS EXPRESSWAY
SANTA CLARA, CA 95050, USA

NV_PN	600-11071-BASE-SCH		
PCB REV	P1071-A00	PAGE	
BOM REV	A	DATE	10-FEB-2010

DACA VGA

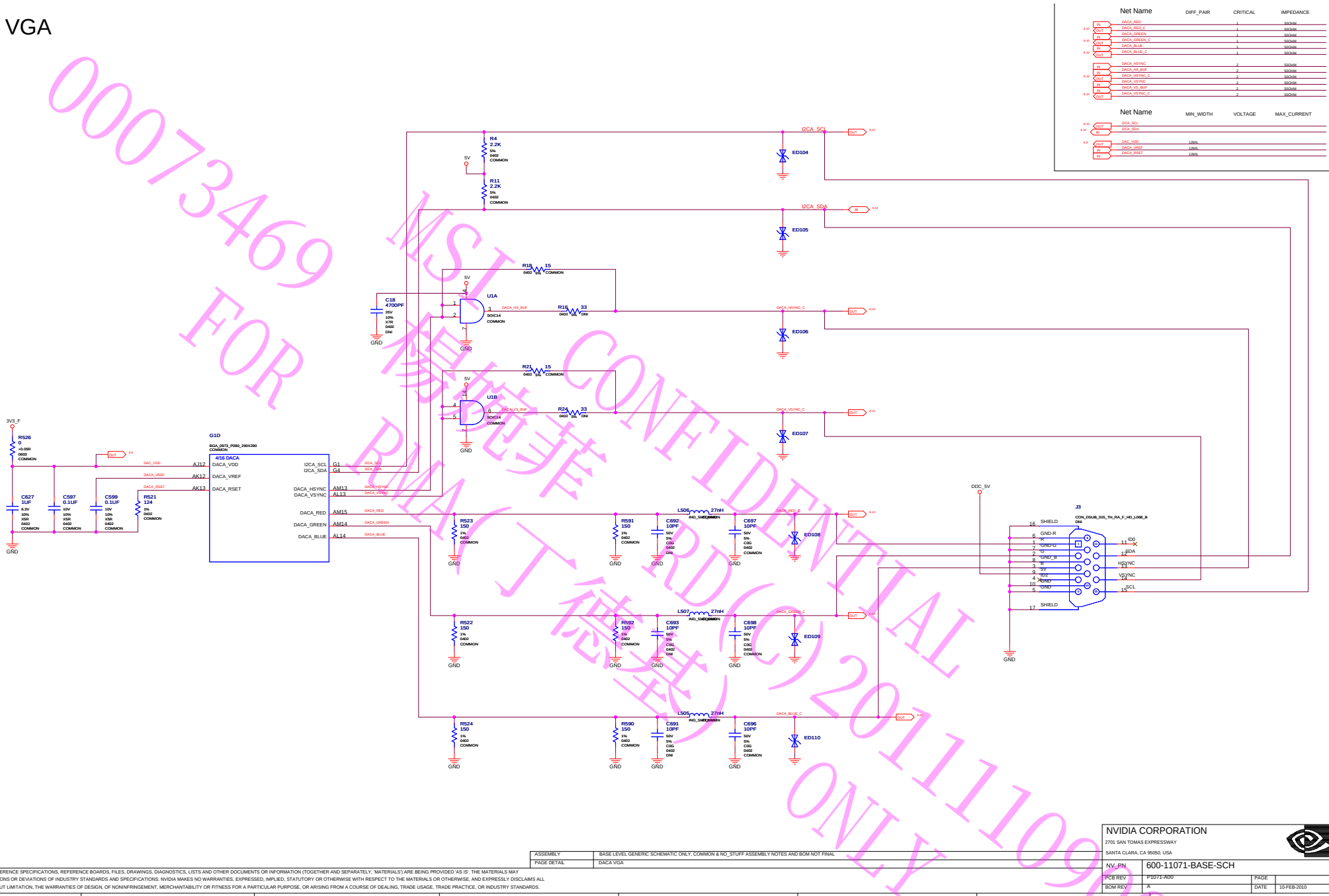

ASSEMBLY	BASE LEVEL GENERIC SCHEMATIC ONLY, COMMON & NO_STUFF ASSEMBLY NOTES AND BOM NOT FINAL
PAGE DETAIL	DACA VGA

NVIDIA CORPORATION
2701 SAN TOMAS EXPRESSWAY
SANTA CLARA, CA 95050, USA

NV_PN	600-11071-BASE-SCH		
PCB REV	P1071-A00	PAGE	
BOM REV	A	DATE	10-FEB-2010

ALL NVIDIA DESIGN SPECIFICATIONS, REFERENCE SPECIFICATIONS, REFERENCE BOARDS, FILES, DRAWINGS, DIAGNOSTICS, LISTS AND OTHER DOCUMENTS OR INFORMATION (TOGETHER AND SEPARATELY, 'MATERIALS') ARE BEING PROVIDED 'AS IS'. THE MATERIALS MAY CONTAIN KNOWN AND UNKNOWN VIOLATIONS OR DEVIATIONS OF INDUSTRY STANDARDS AND SPECIFICATIONS. NVIDIA MAKES NO WARRANTIES, EXPRESSED, IMPLIED, STATUTORY OR OTHERWISE WITH RESPECT TO THE MATERIALS OR OTHERWISE, AND EXPRESSLY DISCLAIMS ALL IMPLIED WARRANTIES INCLUDING, WITHOUT LIMITATION, THE WARRANTIES OF DESIGN, OF NONINFRINGEMENT, MERCHANTABILITY OR FITNESS FOR A PARTICULAR PURPOSE, OR ARISING FROM A COURSE OF DEALING, TRADE USAGE, TRADE PRACTICE, OR INDUSTRY STANDARDS.

00073469 FOR RMA(丁德生) ONLY
MSI CONFIDENTIAL
楊宏祥 AD(C) 20111109001

DACB VGA Header

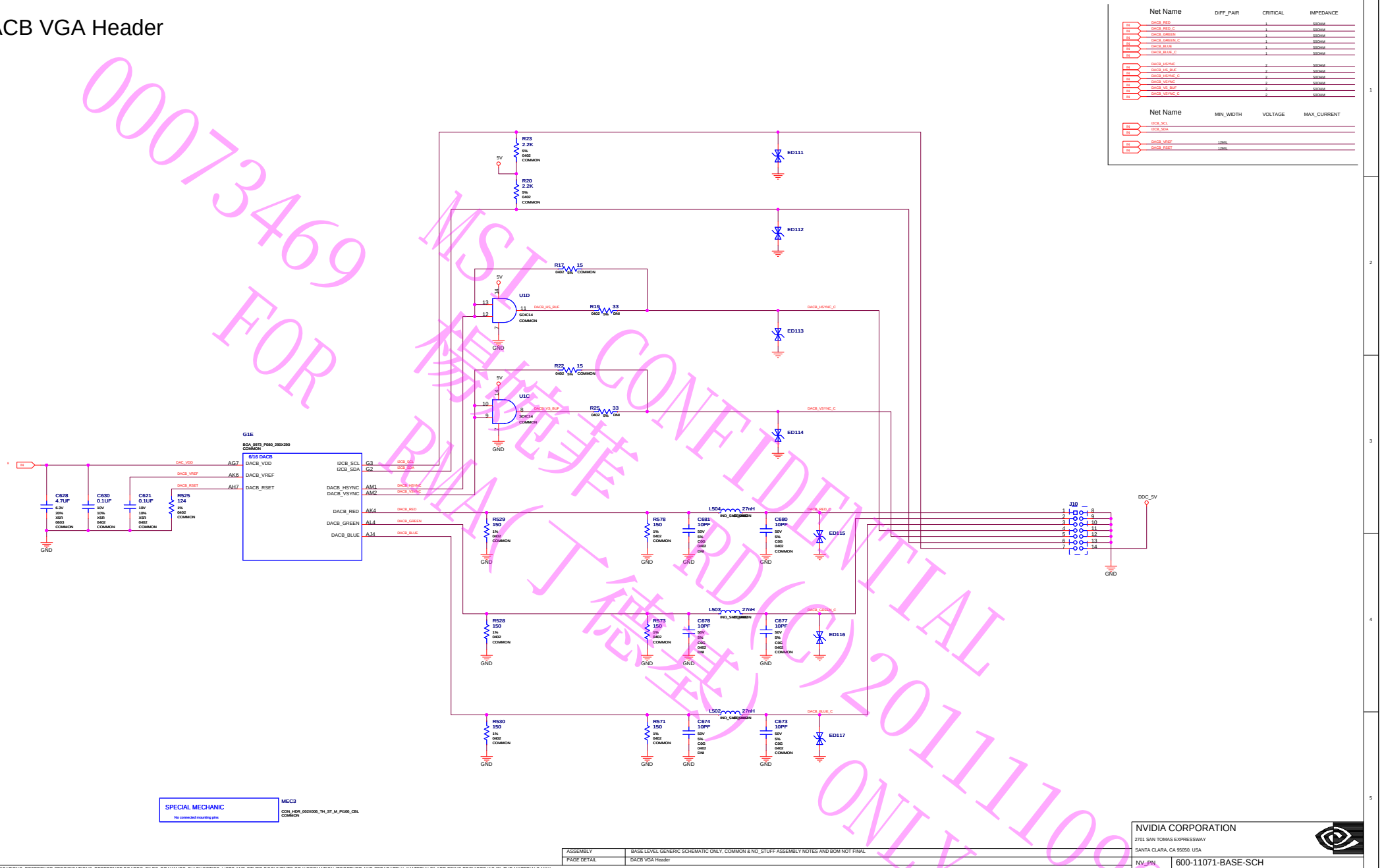

00073469 FOR
MSI 機密 CONFIDENTIAL
RD(C)20111109001
PMA(丁德芳) ONLY

ASSEMBLY	BASE LEVEL GENERIC SCHEMATIC ONLY, COMMON & NO_STUFF ASSEMBLY NOTES AND BOM NOT FINAL
PAGE DETAIL	DACB VGA Header

ALL NVIDIA DESIGN SPECIFICATIONS, REFERENCE SPECIFICATIONS, REFERENCE BOARDS, FILES, DRAWINGS, DIAGNOSTICS, LISTS AND OTHER DOCUMENTS OR INFORMATION (TOGETHER AND SEPARATELY, 'MATERIALS') ARE BEING PROVIDED 'AS IS'. THE MATERIALS MAY CONTAIN KNOWN AND UNKNOWN VIOLATIONS OR DEVIATIONS OF INDUSTRY STANDARDS AND SPECIFICATIONS. NVIDIA MAKES NO WARRANTIES, EXPRESSED, IMPLIED, STATUTORY OR OTHERWISE WITH RESPECT TO THE MATERIALS OR OTHERWISE, AND EXPRESSLY DISCLAIMS ALL IMPLIED WARRANTIES INCLUDING, WITHOUT LIMITATION, THE WARRANTIES OF DESIGN, OF NONINFRINGEMENT, MERCHANTABILITY OR FITNESS FOR A PARTICULAR PURPOSE, OR ARISING FROM A COURSE OF DEALING, TRADE USAGE, TRADE PRACTICE, OR INDUSTRY STANDARDS.

NVIDIA CORPORATION
2701 SAN TOMAS EXPRESSWAY
SANTA CLARA, CA 95050, USA

NV_PN	600-11071-BASE-SCH		
PCB REV	P1071-A00	PAGE	
BOM REV	A	DATE	10-FEB-2010

TMDS Interface

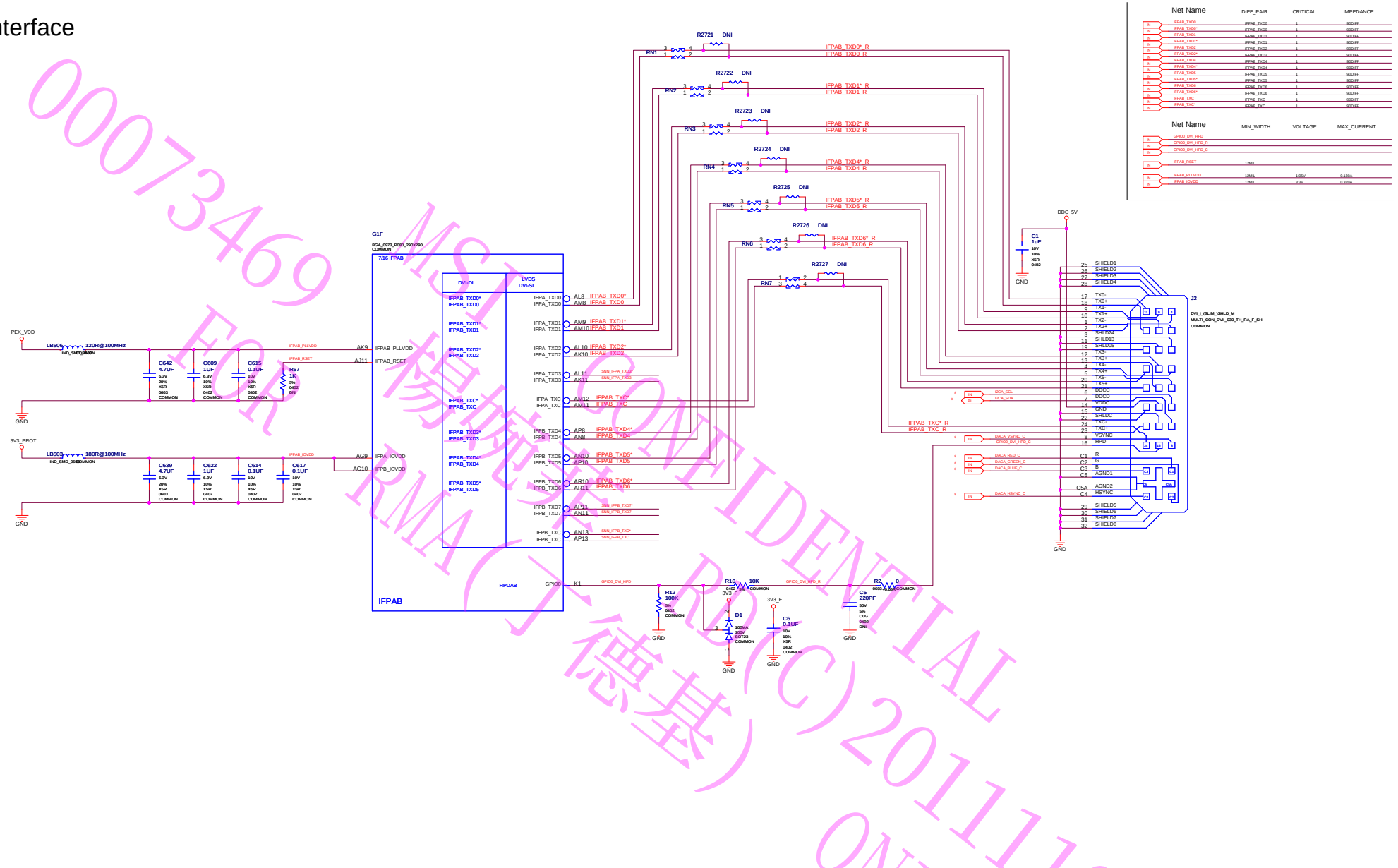

00073469 FOR RMA(丁德基) MSI CONFIDENTIAL RD(C)20111109001 ONLY

ASSEMBLY	BASE LEVEL GENERIC SCHEMATIC ONLY, COMMON & NO_STUFF ASSEMBLY NOTES AND BOM NOT FINAL
PAGE DETAIL	TMDS Interface

ALL NVIDIA DESIGN SPECIFICATIONS, REFERENCE SPECIFICATIONS, REFERENCE BOARDS, FILES, DRAWINGS, DIAGNOSTICS, LISTS AND OTHER DOCUMENTS OR INFORMATION (TOGETHER AND SEPARATELY, 'MATERIALS') ARE BEING PROVIDED 'AS IS'. THE MATERIALS MAY CONTAIN KNOWN AND UNKNOWN VIOLATIONS OR DEVIATIONS OF INDUSTRY STANDARDS AND SPECIFICATIONS. NVIDIA MAKES NO WARRANTIES, EXPRESSED, IMPLIED, STATUTORY OR OTHERWISE WITH RESPECT TO THE MATERIALS OR OTHERWISE, AND EXPRESSLY DISCLAIMS ALL IMPLIED WARRANTIES INCLUDING, WITHOUT LIMITATION, THE WARRANTIES OF DESIGN, OF NONINFRINGEMENT, MERCHANTABILITY OR FITNESS FOR A PARTICULAR PURPOSE, OR ARISING FROM A COURSE OF DEALING, TRADE USAGE, TRADE PRACTICE, OR INDUSTRY STANDARDS.

NVIDIA CORPORATION
2701 SAN TOMAS EXPRESSWAY
SANTA CLARA, CA 95050, USA

NV_PN	600-11071-BASE-SCH		
PCB REV	P1071-A00	PAGE	
BOM REV	A	DATE	10-FEB-2010

HDMI Interface

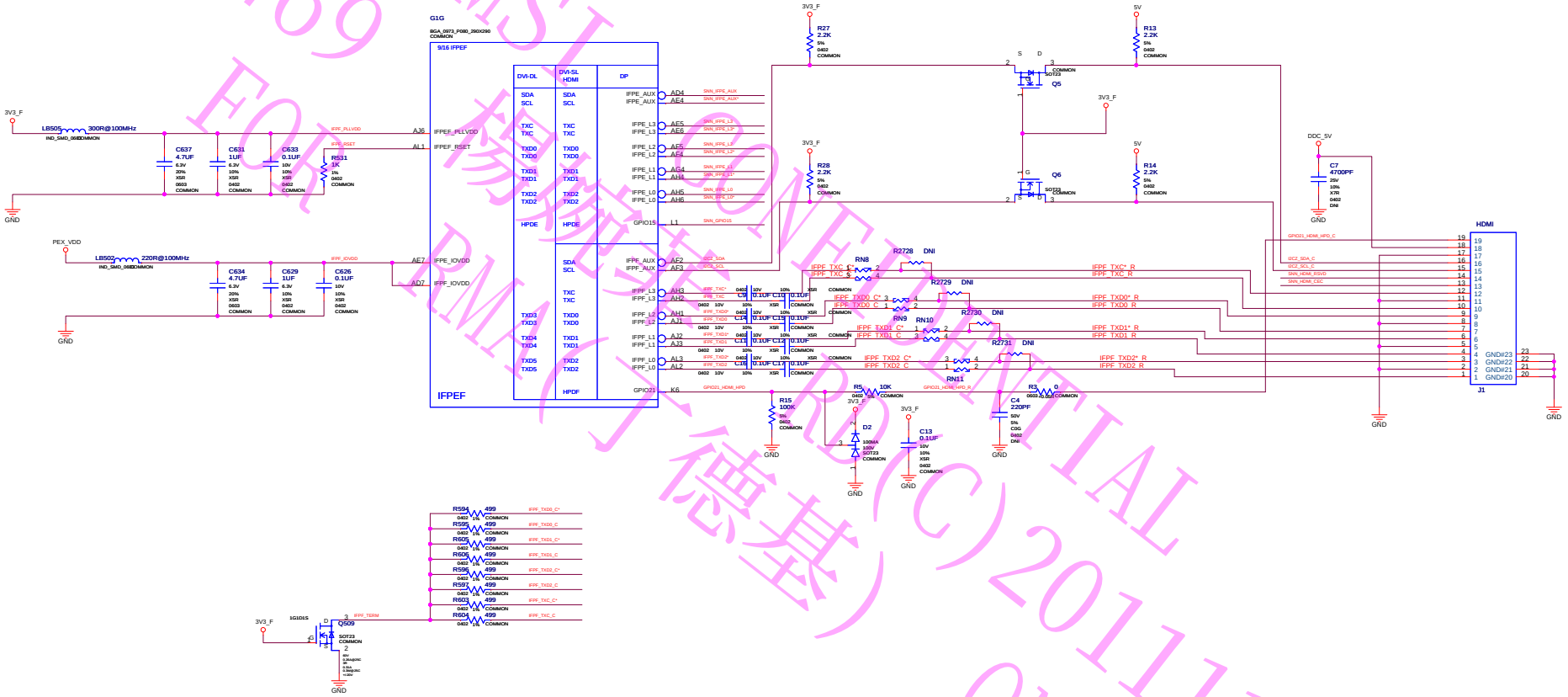

Net Name	DIFF_PAIR	CRITICAL	IMPEDANCE
IFPE_TXD0	IFPE_TXD0	1	95OHM
IFPE_TXD0*	IFPE_TXD0	1	95OHM
IFPE_TXD1	IFPE_TXD1	1	95OHM
IFPE_TXD1*	IFPE_TXD1	1	95OHM
IFPE_TXD2	IFPE_TXD2	1	95OHM
IFPE_TXD2*	IFPE_TXD2	1	95OHM
IFPE_TXC	IFPE_TXC	1	95OHM
IFPE_TXC*	IFPE_TXC	1	95OHM
IFPE_TXD0_C	IFPE_TXD0_C	1	95OHM
IFPE_TXD0_C*	IFPE_TXD0_C	1	95OHM
IFPE_TXD1_C	IFPE_TXD1_C	1	95OHM
IFPE_TXD1_C*	IFPE_TXD1_C	1	95OHM
IFPE_TXD2_C	IFPE_TXD2_C	1	95OHM
IFPE_TXD2_C*	IFPE_TXD2_C	1	95OHM
IFPE_TXC_C	IFPE_TXC_C	1	95OHM
IFPE_TXC_C*	IFPE_TXC_C	1	95OHM

Net Name	MIN_WIDTH	VOLTAGE	MAX_CURRENT
I2C2_SDA			
I2C2_SCL			
I2C2_SDA_C			
I2C2_SCL_C			
GPIO21_HDMI_HPD			
GPIO21_HDMI_HPD_R			
GPIO21_HDMI_HPD_C			
IFPE_TERM	12MIL	0V	
IFPE_RSET	12MIL		
IFPE_PLLVDD	12MIL	3.3V	0.085A
IFPE_IOVDD	12MIL	1.05V	0.105A

ASSEMBLY	BASE LEVEL GENERIC SCHEMATIC ONLY, COMMON & NO_STUFF ASSEMBLY NOTES AND BOM NOT FINAL
PAGE DETAIL	HDMI Interface

ALL NVIDIA DESIGN SPECIFICATIONS, REFERENCE SPECIFICATIONS, REFERENCE BOARDS, FILES, DRAWINGS, DIAGNOSTICS, LISTS AND OTHER DOCUMENTS OR INFORMATION (TOGETHER AND SEPARATELY, "MATERIALS") ARE BEING PROVIDED 'AS IS'. THE MATERIALS MAY CONTAIN KNOWN AND UNKNOWN VIOLATIONS OR DEVIATIONS OF INDUSTRY STANDARDS AND SPECIFICATIONS. NVIDIA MAKES NO WARRANTIES, EXPRESSED, IMPLIED, STATUTORY OR OTHERWISE WITH RESPECT TO THE MATERIALS OR OTHERWISE, AND EXPRESSLY DISCLAIMS ALL IMPLIED WARRANTIES INCLUDING, WITHOUT LIMITATION, THE WARRANTIES OF DESIGN, OF NONINFRINGEMENT, MERCHANTABILITY OR FITNESS FOR A PARTICULAR PURPOSE, OR ARISING FROM A COURSE OF DEALING, TRADE USAGE, TRADE PRACTICE, OR INDUSTRY STANDARDS.

NVIDIA CORPORATION
2701 SAN TOMAS EXPRESSWAY
SANTA CLARA, CA 95050, USA

NV_PN	600-11071-BASE-SCH		
PCB REV	P1071-A00	PAGE	
BOM REV	A	DATE	10-FEB-2010

00073469 FOR RMA 微星科技(股)有限公司 MSI CONFIDENTIAL RD(C)20111109001 ONLY

Unused Interfaces, NVVDD Decoupling

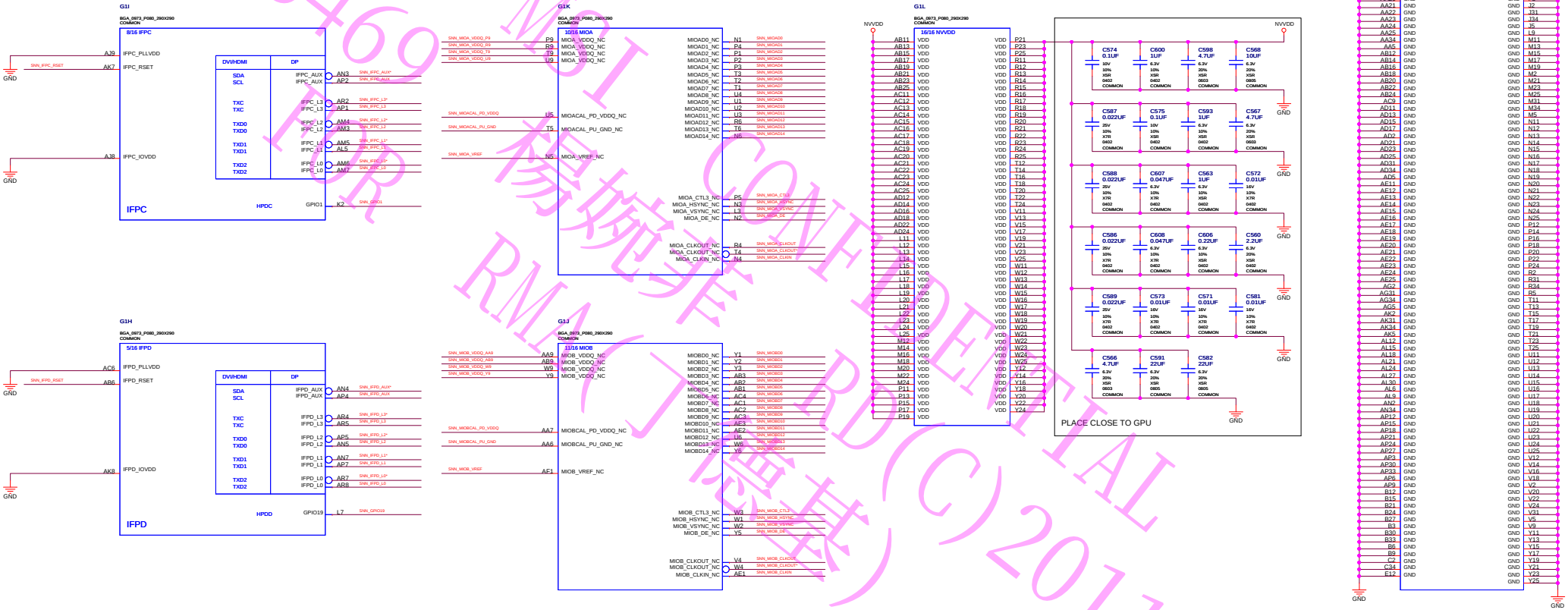

ASSEMBLY	BASE LEVEL GENERIC SCHEMATIC ONLY, COMMON & NO_STUFF ASSEMBLY NOTES AND BOM NOT FINAL
PAGE DETAIL	Unused Interfaces, NVVDD Decoupling

ALL NVIDIA DESIGN SPECIFICATIONS, REFERENCE SPECIFICATIONS, REFERENCE BOARDS, FILES, DRAWINGS, DIAGNOSTICS, LISTS AND OTHER DOCUMENTS OR INFORMATION (TOGETHER AND SEPARATELY, 'MATERIALS') ARE BEING PROVIDED 'AS IS'. THE MATERIALS MAY CONTAIN KNOWN AND UNKNOWN VIOLATIONS OR DEVIATIONS OF INDUSTRY STANDARDS AND SPECIFICATIONS. NVIDIA MAKES NO WARRANTIES, EXPRESSED, IMPLIED, STATUTORY OR OTHERWISE WITH RESPECT TO THE MATERIALS OR OTHERWISE, AND EXPRESSLY DISCLAIMS ALL IMPLIED WARRANTIES INCLUDING, WITHOUT LIMITATION, THE WARRANTIES OF DESIGN, OF NONINFRINGEMENT, MERCHANTABILITY OR FITNESS FOR A PARTICULAR PURPOSE, OR ARISING FROM A COURSE OF DEALING, TRADE USAGE, TRADE PRACTICE, OR INDUSTRY STANDARDS.

NVIDIA CORPORATION
2701 SAN TOMAS EXPRESSWAY
SANTA CLARA, CA 95050, USA

NV_PN	600-11071-BASE-SCH		
PCB REV	P1071-A00	PAGE	
BOM REV	A	DATE	10-FEB-2010

0007346901 NOT FOR RMA CONFIDENTIAL 机密文件 RD (C) 2011 ONLY

XTAL, ROM, JTAG, Misc

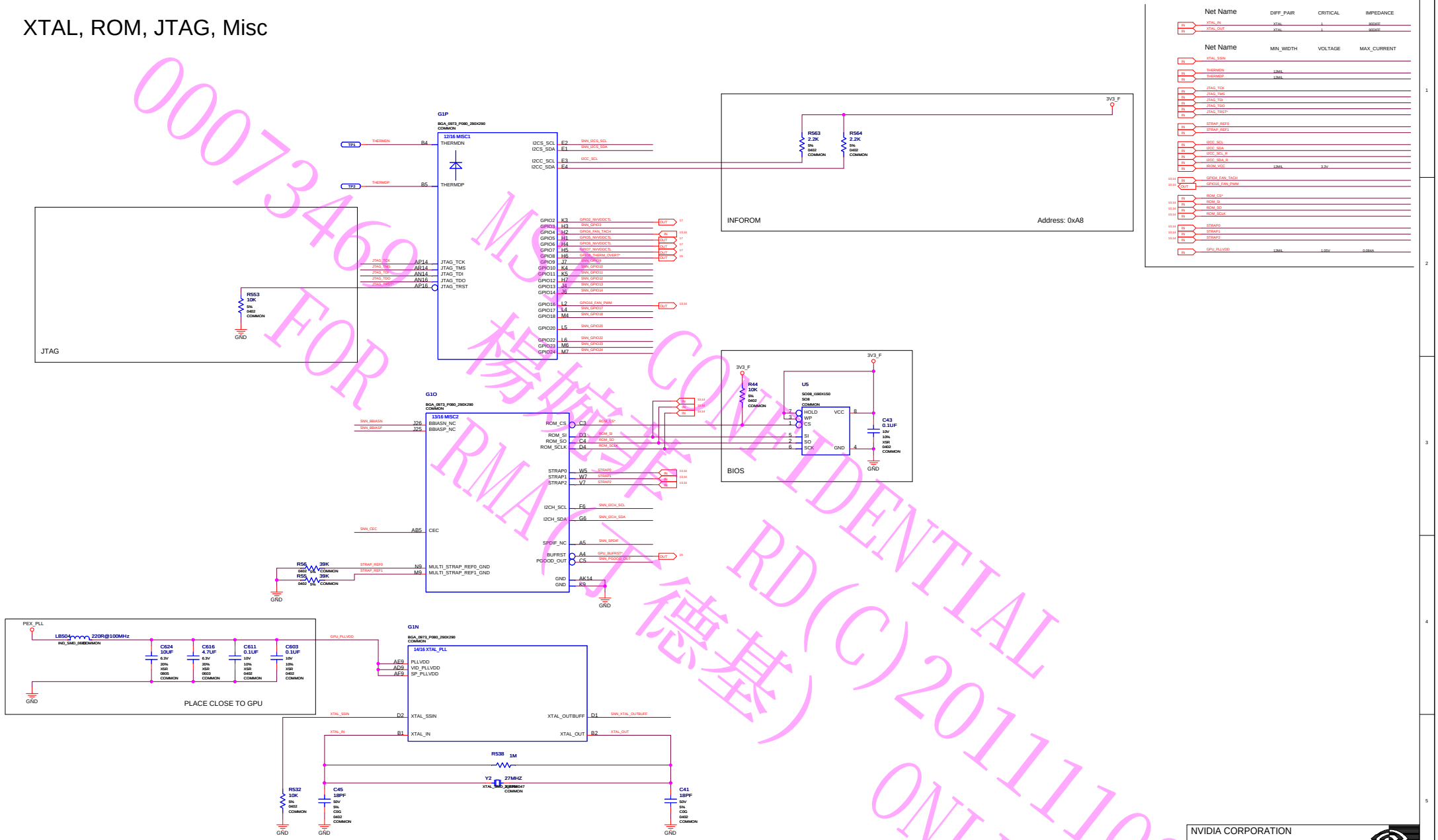

ASSEMBLY	BASE LEVEL GENERIC SCHEMATIC ONLY, COMMON & NO_STUFF ASSEMBLY NOTES AND BOM NOT FINAL
PAGE DETAIL	XTAL, ROM, JTAG, Misc

ALL NVIDIA DESIGN SPECIFICATIONS, REFERENCE SPECIFICATIONS, REFERENCE BOARDS, FILES, DRAWINGS, DIAGNOSTICS, LISTS AND OTHER DOCUMENTS OR INFORMATION (TOGETHER AND SEPARATELY, 'MATERIALS') ARE BEING PROVIDED 'AS IS'. THE MATERIALS MAY CONTAIN KNOWN AND UNKNOWN VIOLATIONS OR DEVIATIONS OF INDUSTRY STANDARDS AND SPECIFICATIONS. NVIDIA MAKES NO WARRANTIES, EXPRESSED, IMPLIED, STATUTORY OR OTHERWISE WITH RESPECT TO THE MATERIALS OR OTHERWISE, AND EXPRESSLY DISCLAIMS ALL IMPLIED WARRANTIES INCLUDING, WITHOUT LIMITATION, THE WARRANTIES OF DESIGN, OF NONINFRINGEMENT, MERCHANTABILITY OR FITNESS FOR A PARTICULAR PURPOSE, OR ARISING FROM A COURSE OF DEALING, TRADE USAGE, TRADE PRACTICE, OR INDUSTRY STANDARDS.

NVIDIA CORPORATION
2701 SAN TOMAS EXPRESSWAY
SANTA CLARA, CA 95050, USA

NV_PN	600-11071-BASE-SCH		
PCB REV	P1071-A00	PAGE	
BOM REV	A	DATE	10-FEB-2010

00073469 FOR RMA 德基 MSC CONFIDENTIAL RD(C)20111109001 ONLY

Straps, Thermal, Mechanical

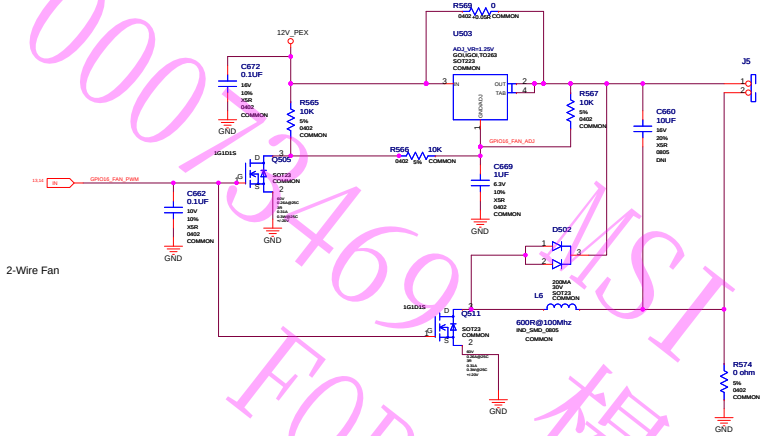

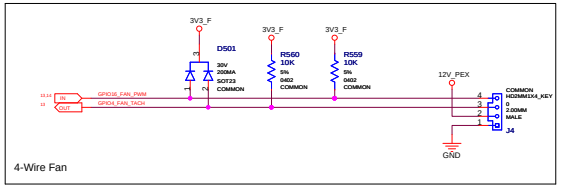

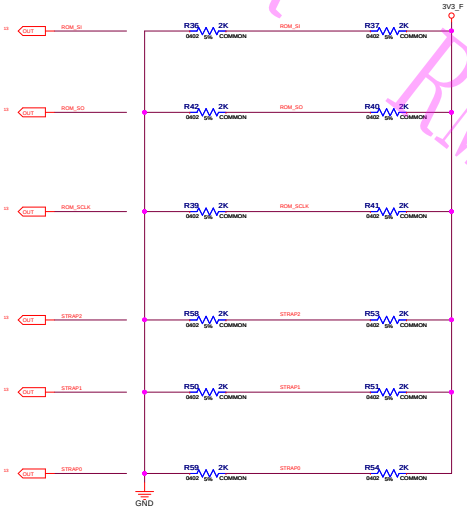

GF108 Straps

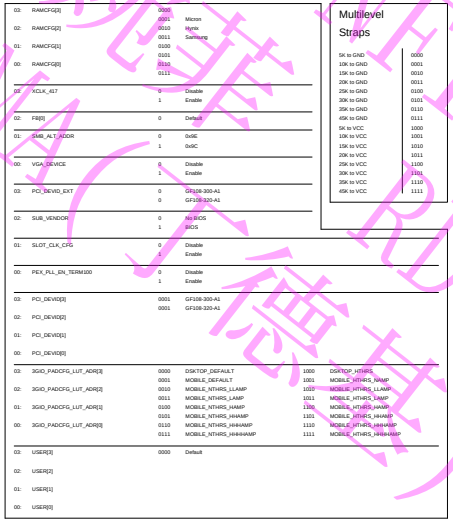

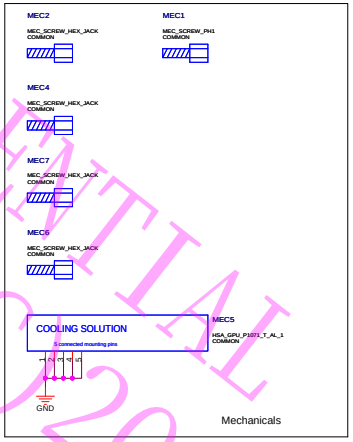

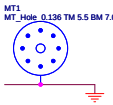

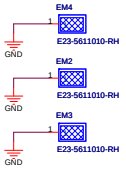

0001946 FOR RMA 仅限华德 MSI CONFIDENTIAL RD(C)20111109001 ONLY

ASSEMBLY	BASE LEVEL GENERIC SCHEMATIC ONLY, COMMON & NO_STUFF ASSEMBLY NOTES AND BOM NOT FINAL
PAGE DETAIL	Straps, Thermal, Mechanical

ALL NVIDIA DESIGN SPECIFICATIONS, REFERENCE SPECIFICATIONS, REFERENCE BOARDS, FILES, DRAWINGS, DIAGNOSTICS, LISTS AND OTHER DOCUMENTS OR INFORMATION (TOGETHER AND SEPARATELY, 'MATERIALS') ARE BEING PROVIDED 'AS IS'. THE MATERIALS MAY CONTAIN KNOWN AND UNKNOWN VIOLATIONS OR DEVIATIONS OF INDUSTRY STANDARDS AND SPECIFICATIONS. NVIDIA MAKES NO WARRANTIES, EXPRESSED, IMPLIED, STATUTORY OR OTHERWISE WITH RESPECT TO THE MATERIALS OR OTHERWISE, AND EXPRESSLY DISCLAIMS ALL IMPLIED WARRANTIES INCLUDING, WITHOUT LIMITATION, THE WARRANTIES OF DESIGN, OF NONINFRINGEMENT, MERCHANTABILITY OR FITNESS FOR A PARTICULAR PURPOSE, OR ARISING FROM A COURSE OF DEALING, TRADE USAGE, TRADE PRACTICE, OR INDUSTRY STANDARDS.

NVIDIA CORPORATION
2701 SAN TOMAS EXPRESSWAY
SANTA CLARA, CA 95050, USA

NV_PN	600-11071-BASE-SCH		
PCB REV	P1071-A00	PAGE	
BOM REV	A	DATE	10-FEB-2010

Power Supply I: Misc Power, Thermal Shutdown

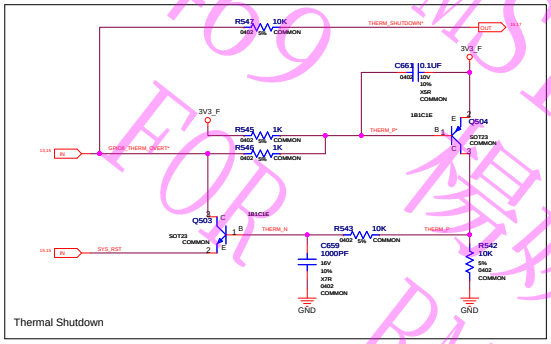

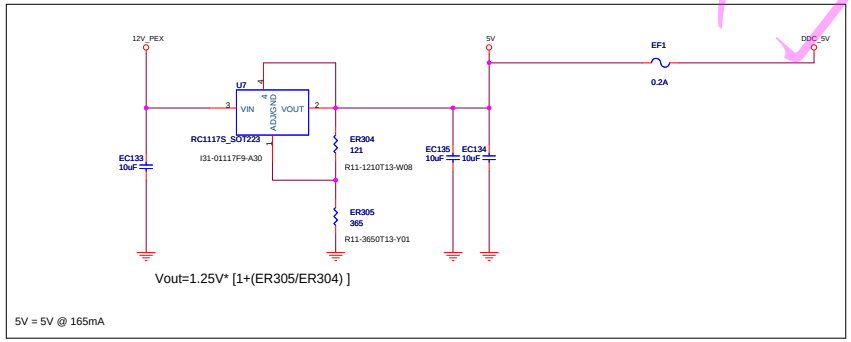

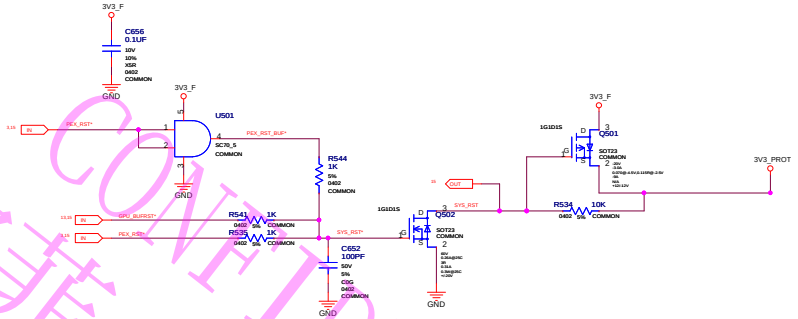

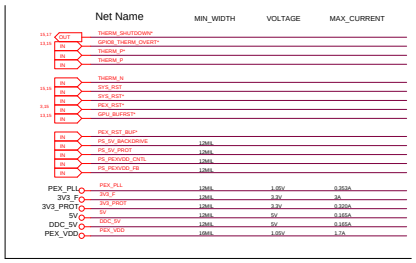

Top
Single Ended_Memory CMD
6.6929 mil
40 ohm +/- 10%

Int3
Single Ended_RGB
4.76377 mil
50 ohm +/- 10%

Bottom
Single Ended_Memory Data
3.937 mil
53 ohm +/- 10%

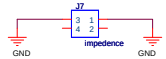

Top
Diffenential_PCIE BUS
3.94 / 4.72 mil
90 ohm +/- 10%

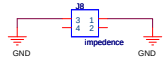

Int3
Diffenential_DVI
3.94 / 5.98 mil
90 ohm +/- 10%

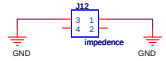

Int3
Diffenential_Memory Clock
4.33 / 4.13 mil
80 ohm +/- 10%

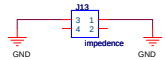

Bottom
Diffenential_PCIE BUS
3.94 / 4.72 mil
90 ohm +/- 10%

ASSEMBLY	BASE LEVEL GENERIC SCHEMATIC ONLY, COMMON & NO_STUFF ASSEMBLY NOTES AND BOM NOT FINAL
PAGE DETAIL	Power Supply I: Misc Power, Thermal Shutdown

ALL NVIDIA DESIGN SPECIFICATIONS, REFERENCE SPECIFICATIONS, REFERENCE BOARDS, FILES, DRAWINGS, DIAGNOSTICS, LISTS AND OTHER DOCUMENTS OR INFORMATION (TOGETHER AND SEPARATELY, 'MATERIALS') ARE BEING PROVIDED 'AS IS'. THE MATERIALS MAY CONTAIN KNOWN AND UNKNOWN VIOLATIONS OR DEVIATIONS OF INDUSTRY STANDARDS AND SPECIFICATIONS. NVIDIA MAKES NO WARRANTIES, EXPRESSED, IMPLIED, STATUTORY OR OTHERWISE WITH RESPECT TO THE MATERIALS OR OTHERWISE, AND EXPRESSLY DISCLAIMS ALL IMPLIED WARRANTIES INCLUDING, WITHOUT LIMITATION, THE WARRANTIES OF DESIGN, OF NONINFRINGEMENT, MERCHANTABILITY OR FITNESS FOR A PARTICULAR PURPOSE, OR ARISING FROM A COURSE OF DEALING, TRADE USAGE, TRADE PRACTICE, OR INDUSTRY STANDARDS.

NVIDIA CORPORATION
2701 SAN TOMAS EXPRESSWAY
SANTA CLARA, CA 95050, USA

NV_PN	600-11071-BASE-SCH		
PCB REV	P1071-A00	PAGE	
BOM REV	A	DATE	10-FEB-2010

0007346 MSI 微信菲 CONFIDENTIAL FOR RD(C)-611109001 RMA(工程) ONLY

Power Supply II: FBVDDQ

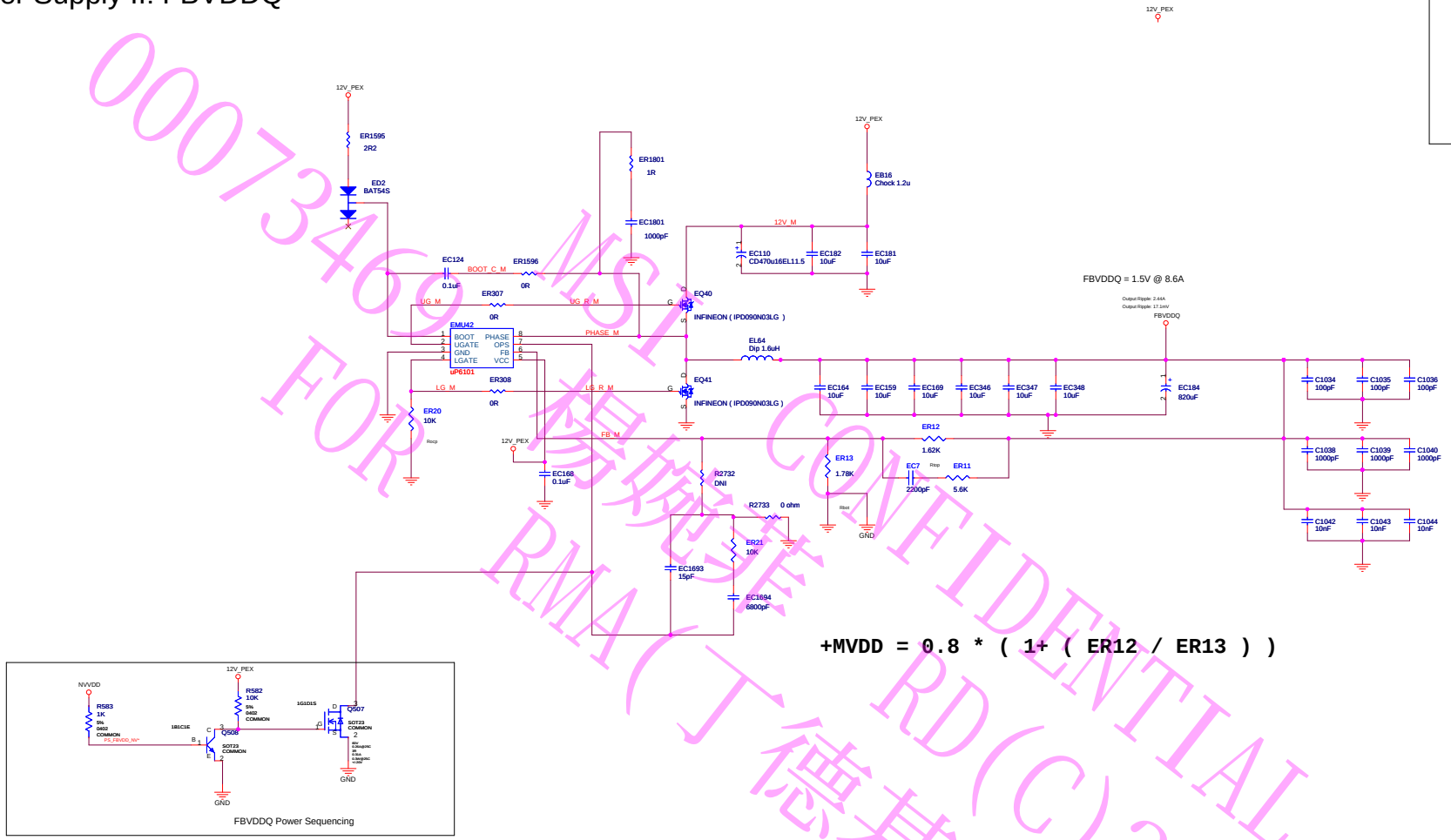

FBVDDQ = 1.5V @ 8.6A

+MVDD = 0.8 * (1+ (ER12 / ER13))

FBVDDQ Power Sequencing

Net Name	MIN_WIDTH	VOLTAGE	MAX_CURRENT
PS_FBVDD_VCC	12MIL		
PS_FBVDD_EN	12MIL		
PS_FBVDD_ENF			
PS_FBVDD_BOOT	12MIL		
PS_FBVDD_BOOT_RC	12MIL		
PS_FBVDD_FB	12MIL		
PS_FBVDD_FB_RC	12MIL		
PS_FBVDD_CF_RC	12MIL		
PS_FBVDD_UG	16MIL		
PS_FBVDD_UG_R	16MIL		
PS_FBVDD_LG	16MIL		
PS_FBVDD_PHASE	16MIL		
PS_FBVDD_SNUB	16MIL		
FBVDDQ	16MIL	1.50V	8.6A

0007346 MSI CONFIDENTIAL
FOR 移交佳 RD(C)20111109001
RMA(丁德基) ONLY

ASSEMBLY	BASE LEVEL GENERIC SCHEMATIC ONLY, COMMON & NO_STUFF ASSEMBLY NOTES AND BOM NOT FINAL
PAGE DETAIL	Power Supply II: FBVDDQ

ALL NVIDIA DESIGN SPECIFICATIONS, REFERENCE SPECIFICATIONS, REFERENCE BOARDS, FILES, DRAWINGS, DIAGNOSTICS, LISTS AND OTHER DOCUMENTS OR INFORMATION (TOGETHER AND SEPARATELY, 'MATERIALS') ARE BEING PROVIDED 'AS IS'. THE MATERIALS MAY CONTAIN KNOWN AND UNKNOWN VIOLATIONS OR DEVIATIONS OF INDUSTRY STANDARDS AND SPECIFICATIONS. NVIDIA MAKES NO WARRANTIES, EXPRESSED, IMPLIED, STATUTORY OR OTHERWISE WITH RESPECT TO THE MATERIALS OR OTHERWISE, AND EXPRESSLY DISCLAIMS ALL IMPLIED WARRANTIES INCLUDING, WITHOUT LIMITATION, THE WARRANTIES OF DESIGN, OF NONINFRINGEMENT, MERCHANTABILITY OR FITNESS FOR A PARTICULAR PURPOSE, OR ARISING FROM A COURSE OF DEALING, TRADE USAGE, TRADE PRACTICE, OR INDUSTRY STANDARDS.

NVIDIA CORPORATION
2701 SAN TOMAS EXPRESSWAY
SANTA CLARA, CA 95050, USA

NV_PN	600-11071-BASE-SCH		
PCB REV	P1071-A00	PAGE	
BOM REV	A	DATE	10-FEB-2010

Power Supply III: NVVDD

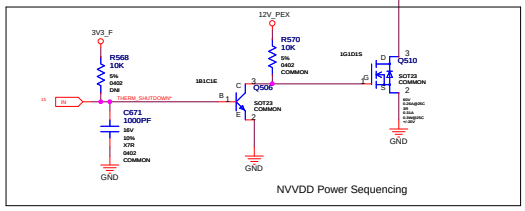

NVVDD Power Sequencing

GPIO[2:7:5]	NVVDD
0000	0.870V
0001	0.885V
0010	0.900V
0011	0.915V
0100	0.930V
0101	0.945V
0110	0.960V
0111	0.975V
1000	0.990V
1001	1.005V
1010	1.020V
1011	1.035V
1100	1.050V
1101	1.065V
1110	1.080V
1111	1.095V

Vref=0.6V; Rin=1.15k; Rb=2.55k; Rb2=47.5k; Rb3=23.7k; Rb4=11.5k; Rb5=5.76k
Vref=0.8V; Rin=931; Rb=10.7k; Rb2=88.7k; Rb3=24.3k; Rb4=12.4k; Rb5=6.19k

0007320 MSI CONFIDENTIAL
FOR 技嘉 RDC(2011109001
RMA(丁德基) ONLY

ASSEMBLY	BASE LEVEL GENERIC SCHEMATIC ONLY, COMMON & NO_STUFF ASSEMBLY NOTES AND BOM NOT FINAL
PAGE DETAIL	Power Supply III: NVVDD

ALL NVIDIA DESIGN SPECIFICATIONS, REFERENCE SPECIFICATIONS, REFERENCE BOARDS, FILES, DRAWINGS, DIAGNOSTICS, LISTS AND OTHER DOCUMENTS OR INFORMATION (TOGETHER AND SEPARATELY, "MATERIALS") ARE BEING PROVIDED 'AS IS'. THE MATERIALS MAY CONTAIN KNOWN AND UNKNOWN VIOLATIONS OR DEVIATIONS OF INDUSTRY STANDARDS AND SPECIFICATIONS. NVIDIA MAKES NO WARRANTIES, EXPRESSED, IMPLIED, STATUTORY OR OTHERWISE WITH RESPECT TO THE MATERIALS OR OTHERWISE, AND EXPRESSLY DISCLAIMS ALL IMPLIED WARRANTIES INCLUDING, WITHOUT LIMITATION, THE WARRANTIES OF DESIGN, OF NONINFRINGEMENT, MERCHANTABILITY OR FITNESS FOR A PARTICULAR PURPOSE, OR ARISING FROM A COURSE OF DEALING, TRADE USAGE, TRADE PRACTICE, OR INDUSTRY STANDARDS.

NVIDIA CORPORATION
2701 SAN TOMAS EXPRESSWAY
SANTA CLARA, CA 95050, USA

NV_PN	600-11071-BASE-SCH		
PCB REV	P1071-A00	PAGE	
BOM REV	A	DATE	10-FEB-2010

Title: Basenet Report
Design: p1071_a00
Date: Feb 10 12:52:26 2010

Base nets and synonyms for
p1071_a00_lib:P1071_A00(@p1071_a00_lib.p
1071_a00(sch_1))
Base Signal Location([Zone][dir])

3V3_F 15.1G
3V3_PEX 17.2H
3V3_PROT 15.1G
5V 15.1G
12V_PEX 17.2H
DACA_BLUE 8.1G< 8.4C
DACA_BLUE_C 8.1G> 8.5F> 10.3F<
DACA_GREEN 8.1G< 8.3C
DACA_GREEN_C 8.1G> 8.4F> 10.3F<
DACA_HSYNC 8.1G< 8.3C
DACA_HSYNC_C 8.1G> 8.2F> 10.3F<
DACA_HS_BUF 8.1G< 8.2D
DACA_RED 8.1G< 8.3C
DACA_RED_C 8.1G> 8.3F> 10.3F<
DACA_RSET 8.1G< 8.3B
DACA_VREF 8.1G< 8.3B
DACA_VSYNC 8.1G< 8.3C
DACA_VSYNC_C 8.1G> 8.3F> 10.3F<
DACA_VS_BUF 8.1G< 8.3D
DACB_BLUE 9.1G< 9.4C
DACB_BLUE_C 9.1G< 9.5E
DACB_GREEN 9.1G< 9.3C
DACB_GREEN_C 9.1G< 9.4E
DACB_HSYNC 9.1G< 9.3C
DACB_HSYNC_C 9.1G> 9.2E
DACB_HS_BUF 9.1G< 9.3D
DACB_RED 9.1G< 9.3C
DACB_RED_C 9.1G< 9.3E
DACB_RSET 9.1G< 9.3B
DACB_VREF 9.1G< 9.3B
DACB_VSYNC 9.1G< 9.3C
DACB_VSYNC_C 9.1G> 9.3E
DACB_VS_BUF 9.1G< 9.3B
DAC_VDD 8.1G> 8.3B> 9.3A<
DDC_5V 15.1G
FBA_CLK0 4.1G> 4.4C> 5.2A<
5.2C< 5.4B<
FBA_CLK0* 4.1G> 4.4C> 5.2A<
5.2C< 5.4B<
FBA_CLK0_T 5.1G< 5.4B
FBA_CLK1 4.1G> 4.4C> 5.2E<
5.2F< 5.5B<
FBA_CLK1* 4.1G> 4.4C> 5.2E<
5.2F< 5.5B<
FBA_CLK1_T 5.1G< 5.5B
FBA_CMD<0> 4.3C 5.1A 5.1C
FBA_CMD<10..0> 4.1G> 4.3D> 5.1A<
FBA_CMD<2> 4.3C 4.3C 5.3A 5.3C
FBA_CMD<3> 4.3C 4.3D 5.2A 5.2C
FBA_CMD<5> 4.3C 4.4D 5.3A 5.3C
5.3E 5.3F
FBA_CMD<6> 4.3C 5.2A 5.2C 5.2E
5.2F
FBA_CMD<7> 4.3C 5.2A 5.2C 5.2E
5.2F
FBA_CMD<8> 4.3C 5.2A 5.2C 5.2E
5.2F
FBA_CMD<9> 4.3C 5.2A 5.2C 5.2E
5.2F
FBA_CMD<10> 4.3C 5.2A 5.2C 5.2E
5.2F
FBA_CMD<11> 4.3C 5.2A 5.2C 5.2E
5.2F
FBA_CMD<12> 4.3C 5.2A 5.2C 5.2E
5.2F
FBA_CMD<13> 4.3C 5.1A 5.1C 5.1E
5.1F
FBA_CMD<15> 4.3C 5.1A 5.1C 5.1E
5.1F
FBA_CMD<16> 4.3C 5.1E 5.1F
FBA_CMD<18> 4.3C 4.3C 5.3E 5.3F
FBA_CMD<19> 4.3C 4.3D 5.2E 5.2F
FBA_CMD<20> 4.3C 5.2A 5.2C 5.2E
5.2F
FBA_CMD<21> 4.3C 5.2A 5.2C 5.2E
5.2F
FBA_CMD<22> 4.4C 5.2A 5.2C 5.2E
5.2F
FBA_CMD<23> 4.4C 5.2A 5.2C 5.2E
5.2F
FBA_CMD<24> 4.4C 5.2A 5.2C 5.2E
5.2F
FBA_CMD<25> 4.4C 5.2A 5.2C 5.2E
5.2F
FBA_CMD<26> 4.4C 5.2A 5.2C 5.2E
5.2F
FBA_CMD<27> 4.4C 5.2A 5.2C 5.2E
5.2F
FBA_CMD<28> 4.4C 5.2A 5.2C 5.2E
5.2F
FBA_CMD<29> 4.4C 5.2A 5.2C 5.2E
5.2F

FBA_CMD<30> 4.4C 5.1A 5.1C 5.1E
5.1F
FBA_D<0> 4.1A 5.4D
FBA_D<63..0> 4.1A<> 4.1G<> 5.4C<>
FBA_D<1> 4.1A 5.4D
FBA_D<2> 4.1A 5.4D
FBA_D<3> 4.1A 5.4D
FBA_D<4> 4.1A 5.4D
FBA_D<5> 4.1A 5.4D
FBA_D<6> 4.1A 5.4D
FBA_D<7> 4.1A 5.4D
FBA_D<8> 4.1A 5.5D
FBA_D<9> 4.1A 5.5D
FBA_D<10> 4.1A 5.5D
FBA_D<11> 4.1A 5.5D
FBA_D<12> 4.1A 5.5D
FBA_D<13> 4.1A 5.5D
FBA_D<14> 4.2A 5.5D
FBA_D<15> 4.2A 5.5D
FBA_D<16> 4.2A 5.4E
FBA_D<17> 4.2A 5.4E
FBA_D<18> 4.2A 5.4E
FBA_D<19> 4.2A 5.4E
FBA_D<20> 4.2A 5.4E
FBA_D<21> 4.2A 5.4E
FBA_D<22> 4.2A 5.4E
FBA_D<23> 4.2A 5.4E
FBA_D<24> 4.2A 5.5E
FBA_D<25> 4.2A 5.5E
FBA_D<26> 4.2A 5.5E
FBA_D<27> 4.2A 5.5E
FBA_D<28> 4.2A 5.5E
FBA_D<29> 4.2A 5.5E
FBA_D<30> 4.2A 5.5E
FBA_D<31> 4.2A 5.5E
FBA_D<32> 4.2A 5.4F
FBA_D<33> 4.2A 5.4F
FBA_D<34> 4.2A 5.4F
FBA_D<35> 4.2A 5.4F
FBA_D<36> 4.2A 5.4F
FBA_D<37> 4.2A 5.4F
FBA_D<38> 4.2A 5.4F
FBA_D<39> 4.2A 5.4F
FBA_D<40> 4.2A 5.4F
FBA_D<41> 4.2A 5.4F
FBA_D<42> 4.2A 5.5F
FBA_D<43> 4.2A 5.5F
FBA_D<44> 4.2A 5.5F
FBA_D<45> 4.3A 5.5F
FBA_D<46> 4.3A 5.5F
FBA_D<47> 4.3A 5.5F
FBA_D<48> 4.3A 5.4G
FBA_D<49> 4.3A 5.4G
FBA_D<50> 4.3A 5.4G
FBA_D<51> 4.3A 5.4G
FBA_D<52> 4.3A 5.4G
FBA_D<53> 4.3A 5.4G
FBA_D<54> 4.3A 5.4G
FBA_D<55> 4.3A 5.4G
FBA_D<56> 4.3A 5.5G
FBA_D<57> 4.3A 5.5G
FBA_D<58> 4.3A 5.5G
FBA_D<59> 4.3A 5.5G
FBA_D<60> 4.3A 5.5G
FBA_D<61> 4.3A 5.5G
FBA_D<62> 4.3A 5.5G
FBA_D<63> 4.3A 5.5G
FBA_DEBUG0 4.1G< 4.4C
FBA_DEBUG1 4.2G< 4.4C
FBA_DQM<0> 4.3A 5.4D
FBA_DQM<1..0> 4.1G< 4.3D> 5.4C<
FBA_DQM<1> 4.3A 5.5D
FBA_DQM<2> 4.3A 5.4E
FBA_DQM<3> 4.3A 5.5E
FBA_DQM<4> 4.3A 5.4F
FBA_DQM<5> 4.3A 5.5F
FBA_DQM<6> 4.3A 5.4G
FBA_DQM<7> 4.3A 5.5G
FBA_DQS_RN<0> 4.4A 5.4D 7.1G
FBA_DQS_RN<7..0> 4.4A<> 5.4C<> 7.1G<>
FBA_DQS_RN<1> 4.4A 5.5D 7.1G
FBA_DQS_RN<2> 4.4A 5.4E 7.1G
FBA_DQS_RN<3> 4.4A 5.5E 7.1G
FBA_DQS_RN<4> 4.4A 5.4F 7.1G
FBA_DQS_RN<5> 4.4A 5.5F 7.1G
FBA_DQS_RN<6> 4.4A 5.4G 7.1G
FBA_DQS_RN<7> 4.4A 5.5G 7.1G
FBA_DQS_WP<0> 4.4A 5.4D 7.1G
FBA_DQS_WP<7..0> 4.4A<> 5.4C<> 7.1G<>
FBA_DQS_WP<1> 4.4A 5.5D 7.1G
FBA_DQS_WP<2> 4.4A 5.4E 7.1G
FBA_DQS_WP<3> 4.4A 5.5E 7.1G
FBA_DQS_WP<4> 4.4A 5.4F 7.1G
FBA_DQS_WP<5> 4.4A 5.5F 7.1G
FBA_DQS_WP<6> 4.4A 5.4G 7.1G
FBA_DQS_WP<7> 4.4A 5.5G 7.1G
FBA_VREF 5.1G< 5.3H
FBA_ZQ0 5.1G< 5.3A
FBA_ZQ1 5.1G< 5.3C
FBA_ZQ2 5.1G< 5.3E
FBA_ZQ3 5.1G< 5.3F

FBB_CLK0 4.1G> 4.4G> 6.2A<
6.2C< 6.4B<
FBB_CLK0* 4.1G> 4.4G> 6.2A<
6.2C< 6.4B<
FBB_CLK0_T 6.1G< 6.4B
FBB_CLK1 4.1G> 4.4G> 6.2E<
6.2F< 6.5B<
FBB_CLK1* 4.1G> 4.4G> 6.2E<
6.2F< 6.5B<
FBB_CLK1_T 6.1G< 6.5B
FBB_CMD<0> 4.3G 6.1A 6.1C
FBB_CMD<30..0> 4.1G> 4.3H> 6.1A<
FBB_CMD<2> 4.3G 4.3G 6.3A 6.3C
FBB_CMD<3> 4.3G 4.3H 6.2A 6.2C
FBB_CMD<5> 4.3G 4.4H 6.3A 6.3C
6.3E 6.3F
FBB_CMD<6> 4.3G 6.2A 6.2C 6.2E
6.2F
FBB_CMD<7> 4.3G 6.2A 6.2C 6.2E
6.2F
FBB_CMD<8> 4.3G 6.2A 6.2C 6.2E
6.2F
FBB_CMD<9> 4.3G 6.2A 6.2C 6.2E
6.2F
FBB_CMD<10> 4.3G 6.2A 6.2C 6.2E
6.2F
FBB_CMD<11> 4.3G 6.2A 6.2C 6.2E
6.2F
FBB_CMD<12> 4.3G 6.2A 6.2C 6.2E
6.2F
FBB_CMD<13> 4.3G 6.1A 6.1C 6.1E
6.1F
FBB_CMD<15> 4.3G 6.1A 6.1C 6.1E
6.1F
FBB_CMD<16> 4.3G 6.1E 6.1F
FBB_CMD<18> 4.3G 4.3G 6.3E 6.3F
FBB_CMD<19> 4.3G 4.3H 6.2E 6.2F
FBB_CMD<20> 4.3G 6.2A 6.2C 6.2E
6.2F
FBB_CMD<21> 4.3G 6.2A 6.2C 6.2E
6.2F
FBB_CMD<22> 4.3G 6.2A 6.2C 6.2E
6.2F
FBB_CMD<23> 4.4G 6.2A 6.2C 6.2E
6.2F
FBB_CMD<24> 4.4G 6.2A 6.2C 6.2E
6.2F
FBB_CMD<25> 4.4G 6.2A 6.2C 6.2E
6.2F
FBB_CMD<26> 4.4G 6.2A 6.2C 6.2E
6.2F
FBB_CMD<27> 4.4G 6.2A 6.2C 6.2E
6.2F
FBB_CMD<28> 4.4G 6.2A 6.2C 6.2E
6.2F
FBB_CMD<29> 4.4G 6.2A 6.2C 6.2E
6.2F
FBB_CMD<30> 4.4G 6.1A 6.1C 6.1E
6.1F
FBB_D<0> 4.1E 6.4D
FBB_D<63..0> 4.1E<> 4.1G<> 6.4C<>
FBB_D<1> 4.1E 6.4D
FBB_D<2> 4.1E 6.4D
FBB_D<3> 4.1E 6.4D
FBB_D<4> 4.1E 6.4D
FBB_D<5> 4.1E 6.4D
FBB_D<6> 4.1E 6.4D
FBB_D<7> 4.1E 6.4D
FBB_D<8> 4.1E 6.5D
FBB_D<9> 4.1E 6.5D
FBB_D<10> 4.1E 6.5D
FBB_D<11> 4.1E 6.5D
FBB_D<12> 4.1E 6.5D
FBB_D<13> 4.1E 6.5D
FBB_D<14> 4.1E 6.5D
FBB_D<15> 4.2E 6.5D
FBB_D<16> 4.2E 6.4E
FBB_D<17> 4.2E 6.4E
FBB_D<18> 4.2E 6.4E
FBB_D<19> 4.2E 6.4E
FBB_D<20> 4.2E 6.4E
FBB_D<21> 4.2E 6.4E
FBB_D<22> 4.2E 6.4E
FBB_D<23> 4.2E 6.4E
FBB_D<24> 4.2E 6.5E
FBB_D<25> 4.2E 6.5E
FBB_D<26> 4.2E 6.5E
FBB_D<27> 4.2E 6.5E
FBB_D<28> 4.2E 6.5E
FBB_D<29> 4.2E 6.5E
FBB_D<30> 4.2E 6.5E
FBB_D<31> 4.2E 6.5E
FBB_D<32> 4.2E 6.4F
FBB_D<33> 4.2E 6.4F
FBB_D<34> 4.2E 6.4F
FBB_D<35> 4.2E 6.4F
FBB_D<36> 4.2E 6.4F
FBB_D<37> 4.2E 6.4F
FBB_D<38> 4.2E 6.4F
FBB_D<39> 4.2E 6.4F
FBB_D<40> 4.2E 6.5F
FBB_D<41> 4.2E 6.5F
FBB_D<42> 4.2E 6.5F
FBB_D<43> 4.2E 6.5F
FBB_D<44> 4.2E 6.5F
FBB_D<45> 4.3E 6.5F
FBB_D<46> 4.3E 6.5F
FBB_D<47> 4.3E 6.5F
FBB_D<48> 4.3E 6.4G
FBB_D<49> 4.3E 6.4G
FBB_D<50> 4.3E 6.4G
FBB_D<51> 4.3E 6.4G
FBB_D<52> 4.3E 6.4G
FBB_D<53> 4.3E 6.4G
FBB_D<54> 4.3E 6.4G
FBB_D<55> 4.3E 6.4G
FBB_D<56> 4.3E 6.5G
FBB_D<57> 4.3E 6.5G
FBB_D<58> 4.3E 6.5G
FBB_D<59> 4.3E 6.5G
FBB_D<60> 4.3E 6.5G
FBB_D<61> 4.3E 6.5G
FBB_D<62> 4.3E 6.5G
FBB_D<63> 4.3E 6.5G
FBB_DEBUG0 4.2G< 4.4G
FBB_DEBUG1 4.2G< 4.4G
FBB_DQM<0> 4.3E 6.4D
FBB_DQM<7..0> 4.1G> 4.3E> 6.4C<
FBB_DQM<1> 4.3E 6.5D
FBB_DQM<2> 4.3E 6.4E
FBB_DQM<3> 4.3E 6.5E
FBB_DQM<4> 4.3E 6.4F
FBB_DQM<5> 4.3E 6.5F
FBB_DQM<6> 4.3E 6.4G
FBB_DQM<7> 4.3E 6.5G
FBB_DQS_RN<0> 4.4E 6.4D 7.1G
FBB_DQS_RN<7..0> 4.4E<> 6.4C<> 7.1G<>
FBB_DQS_RN<1> 4.4E 6.5D 7.1G
FBB_DQS_RN<2> 4.4E 6.4E 7.1G
FBB_DQS_RN<3> 4.4E 6.5E 7.1G
FBB_DQS_RN<4> 4.4E 6.4F 7.2G
FBB_DQS_RN<5> 4.4E 6.5F 7.2G
FBB_DQS_RN<6> 4.4E 6.4G 7.2G
FBB_DQS_RN<7> 4.4E 6.5G 7.2G
FBB_DQS_WP<0> 4.4E 6.4D 7.1G
FBB_DQS_WP<7..0> 4.4E<> 6.4C<> 7.1G<>
FBB_DQS_WP<1> 4.4E 6.5D 7.1G
FBB_DQS_WP<2> 4.4E 6.4E 7.1G
FBB_DQS_WP<3> 4.4E 6.5E 7.1G
FBB_DQS_WP<4> 4.4E 6.4F 7.2G
FBB_DQS_WP<5> 4.4E 6.5F 7.2G
FBB_DQS_WP<6> 4.4E 6.4G 7.2G
FBB_DQS_WP<7> 4.4E 6.5G 7.2G
FBB_VREF0 6.1G< 6.3D
FBB_VREF1 6.1G< 6.3H
FBB_ZQ0 6.1G< 6.3A
FBB_ZQ1 6.1G< 6.3C
FBB_ZQ2 6.1G< 6.3E
FBB_ZQ3 6.1G< 6.3F
FBVDDQ 16.1G
FB_CAL_PD_VDDQ 4.1G< 4.5G
FB_CAL_PU_GND 4.1G< 4.5G
FB_CAL_TERM_GND 4.1G< 4.5G
FB_PLLAVDD 4.2G< 4.5C
GPIO0_DVI_HPD 10.1G> 10.4D
GPIO0_DVI_HPD_C 10.1G< 10.3F
GPIO0_DVI_HPD_R 10.1G< 10.4E
GPIO2_NVVDDCTL 13.2D> 17.1G< 17.5G<
GPIO2_NVVDDCTL_R 17.2G< 17.5F
GPIO4_FAN_TACH 13.2D< 13.2G< 14.2E>
GPIO5_NVVDDCTL 13.2D> 17.1G< 17.4D<
GPIO5_NVVDDCTL_R 17.1G< 17.4E
GPIO6_NVVDDCTL 13.2D> 17.1G< 17.4G<
GPIO6_NVVDDCTL_R 17.1G< 17.4F
GPIO7_NVVDDCTL 13.2D> 17.1G< 17.5D<
GPIO7_NVVDDCTL_R 17.1G< 17.5E
GPIO8_THERM_OVERT* 13.2D> 15.1G< 15.2B<
GPIO16_FAN_ADJ 14.1G< 14.2C
GPIO16_FAN_C 14.1G< 14.2D
GPIO16_FAN_PWM 13.2D> 13.2G> 14.2B<
14.2E<
GPIO16_FAN_Q 14.1G< 14.2C
GPIO21_HDMI_HPD 11.2G< 11.4D
GPIO21_HDMI_HPD_C 11.2G< 11.3G
GPIO21_HDMI_HPD_R 11.2G< 11.4E
GPU_BUFRST* 13.4D> 15.1G< 15.3E<
GPU_PLLVDD 13.2G< 13.4B
GPU_TESTMODE 3.1G< 3.5F
I2CA_SCL 8.1F> 8.1G> 10.3F<
I2CA_SDA 8.1G<> 8.2F<> 10.3F<>
I2CB_SCL 9.1G< 9.3C
I2CB_SDA 9.1G< 9.3C
I2CC_SCL 13.1D 13.1G<
I2CC_SCL_R 13.1F 13.1G<
I2CC_SDA 13.1D 13.1G<
I2CC_SDA_R 13.1F 13.1G<
I2CZ_SCL 11.1G< 11.3D
I2CZ_SCL_C 11.1G< 11.3G
I2CZ_SDA 11.1G< 11.3D
I2CZ_SDA_C 11.1G< 11.3G
IFPAB_IOVDD 10.2G< 10.3C
IFPAB_PLLVDD 10.1G< 10.2C

IFPAB_RSET 10.1G< 10.2C
IFPAB_TXC 10.1G< 10.3D
IFPAB_TXC* 10.1G< 10.3D
IFPAB_TXD0 10.1G< 10.2D
IFPAB_TXD0* 10.1G< 10.2D
IFPAB_TXD1 10.1G< 10.2D
IFPAB_TXD1* 10.1G< 10.2D
IFPAB_TXD2 10.1G< 10.2D
IFPAB_TXD2* 10.1G< 10.2D
IFPAB_TXD4 10.1G< 10.3D
IFPAB_TXD4* 10.1G< 10.3D
IFPAB_TXD5 10.1G< 10.3D
IFPAB_TXD5* 10.1G< 10.3D
IFPAB_TXD6 10.1G< 10.3D
IFPAB_TXD6* 10.1G< 10.3D
IFPF_IOVDD 11.2G< 11.3C
IFPF_PLLVDD 11.2C 11.2G<
IFPF_RSET 11.2G< 11.3C
IFPF_TERM 11.2G< 11.5C
IFPF_TXC 11.1G< 11.3D
IFPF_TXC* 11.1G< 11.3D
IFPF_TXC_C 11.1G< 11.3G 11.5D
IFPF_TXC_C* 11.1G< 11.3G 11.5D
IFPF_TXD0 11.1G< 11.3D
IFPF_TXD0* 11.1G< 11.3D
IFPF_TXD0_C 11.1G< 11.3G 11.4D
IFPF_TXD0_C* 11.1G< 11.3G 11.4D
IFPF_TXD1 11.1G< 11.3D
IFPF_TXD1* 11.1G< 11.3D
IFPF_TXD1_C 11.1G< 11.3G 11.4D
IFPF_TXD1_C* 11.1G< 11.3G 11.4D
IFPF_TXD2 11.1G< 11.3D
IFPF_TXD2* 11.1G< 11.3D
IFPF_TXD2_C 11.1G< 11.4D 11.4G
IFPF_TXD2_C* 11.1G< 11.3G 11.4D
IROM_VCC 13.1F 13.1G<
JTAG_TCK 13.1G< 13.2C
JTAG_TDI 13.1G< 13.2C
JTAG_TDO 13.1G< 13.2C
JTAG_TMS 13.1G< 13.2C
JTAG_TRST* 13.1G< 13.2C
NVVDD 17.2H
NVVDD_SENSE 3.4F> 17.1G< 17.4H<
PEX_PLL 15.1G
PEX_PLLVDD 3.1G< 3.4F
PEX_PRSNT* 3.1B 3.1G<
PEX_REFCLK 3.2C 3.5A<
PEX_REFCLK* 3.2C 3.5A<
PEX_RST* 3.1D> 15.1G< 15.2E<
15.3E<
PEX_RST_BUF* 15.1G< 15.2F
PEX_RX0 3.2C 3.4A<
PEX_RX0* 3.2C 3.4A<
PEX_RX1 3.2C 3.4A<
PEX_RX1* 3.2C 3.4A<
PEX_RX2 3.2C 3.4A<
PEX_RX2* 3.3C 3.4A<
PEX_RX3 3.3C 3.4A<
PEX_RX3* 3.3C 3.4A<
PEX_RX4 3.3C 3.4A<
PEX_RX4* 3.3C 3.4A<
PEX_RX5 3.3C 3.5A<
PEX_RX5* 3.3C 3.5A<
PEX_RX6 3.3C 3.5A<
PEX_RX6* 3.3C 3.5A<
PEX_RX7 3.3C 3.5A<
PEX_RX7* 3.4C 3.5A<
PEX_RX8 3.4C 3.5A<
PEX_RX8* 3.4C 3.5A<
PEX_RX9 3.4C 3.5A<
PEX_RX9* 3.4C 3.5A<
PEX_RX10 3.4C 3.5A<
PEX_RX10* 3.4C 3.5A<
PEX_RX11 3.4C 3.5A<
PEX_RX11* 3.4C 3.5A<
PEX_RX12 3.4C 3.5A<
PEX_RX12* 3.5A< 3.5C<
PEX_RX13 3.5A< 3.5C<
PEX_RX13* 3.5A< 3.5C<
PEX_RX14 3.5A< 3.5C<
PEX_RX14* 3.5A< 3.5C<
PEX_RX15 3.5A< 3.5C<
PEX_RX15* 3.5A< 3.5C<
PEX_TERMP 3.1G< 3.5F
PEX_TX0 3.2A< 3.2D
PEX_TX0* 3.2A< 3.2D
PEX_TX1 3.2A< 3.2D
PEX_TX1* 3.2A< 3.2D
PEX_TX2 3.2A< 3.2D
PEX_TX2* 3.2A< 3.2D
PEX_TX3 3.2A< 3.3D
PEX_TX3* 3.2A< 3.3D
PEX_TX4 3.2A< 3.3D
PEX_TX4* 3.2A< 3.3D
PEX_TX5 3.2A< 3.3D
PEX_TX5* 3.2A< 3.3D
PEX_TX6 3.2A< 3.3D
PEX_TX6* 3.2A< 3.3D
PEX_TX7 3.2A< 3.3D
PEX_TX7* 3.2A< 3.3D
PEX_TX8 3.3A< 3.4D

PEX_TX8* 3.3A< 3.4D
PEX_TX9 3.3A< 3.4D
PEX_TX9* 3.3A< 3.4D
PEX_TX10 3.3A< 3.4D
PEX_TX10* 3.3A< 3.4D
PEX_TX11 3.3A< 3.4D
PEX_TX11* 3.3A< 3.4D
PEX_TX12 3.3A< 3.4D
PEX_TX12* 3.3A< 3.4D
PEX_TX13 3.3A< 3.5D
PEX_TX13* 3.3A< 3.5D
PEX_TX14 3.3A< 3.5D
PEX_TX14* 3.3A< 3.5D
PEX_TX15 3.3A< 3.5D
PEX_TX15* 3.3A< 3.5D
PEX_TX0 3.2C 3.3A<
PEX_TX0* 3.2C 3.3A<
PEX_TX1 3.2C 3.3A<
PEX_TX1* 3.2C 3.3A<
PEX_TX2 3.2C 3.3A<
PEX_TX2* 3.2C 3.3A<
PEX_TX3 3.3A< 3.3C
PEX_TX3* 3.3A< 3.3C
PEX_TX4 3.3A< 3.3C
PEX_TX4* 3.3A< 3.3C
PEX_TX5 3.3A< 3.3C
PEX_TX5* 3.3A< 3.3C
PEX_TX6 3.3A< 3.3C
PEX_TX6* 3.3C 3.4A<
PEX_TX7 3.3C 3.4A<
PEX_TX7* 3.3C 3.4A<
PEX_TX8 3.4A< 3.4C
PEX_TX8* 3.4A< 3.4C
PEX_TX9 3.4A< 3.4C
PEX_TX9* 3.4A< 3.4C
PEX_TX10 3.4A< 3.4C
PEX_TX10* 3.4A< 3.4C
PEX_TX11 3.4A< 3.4C
PEX_TX11* 3.4A< 3.4C
PEX_TX12 3.4A< 3.4C
PEX_TX12* 3.4A< 3.4C
PEX_TX13 3.4A< 3.5C
PEX_TX13* 3.4A< 3.5C
PEX_TX14 3.4A< 3.5C
PEX_TX14* 3.4A< 3.5C
PEX_TX15 3.4A< 3.5C
PEX_TX15* 3.4A< 3.5C
PEX_VDD 15.1G
PS_5V_BACKDRIVE 15.1G< 15.4B
PS_5V_PROT 15.1G< 15.4B
PS_FBVDD_BOOT 16.1G< 16.2C
PS_FBVDD_BOOT_RC 16.1G< 16.2D
PS_FBVDD_CP_RC 16.1G< 16.4C
PS_FBVDD_EN 16.1G< 16.3B
PS_FBVDD_EN* 16.1G< 16.4B
PS_FBVDD_FB 16.1G< 16.3C
PS_FBVDD_FB_R 16.4F
PS_FBVDD_FB_RC 16.1G< 16.3F
PS_FBVDD_LG 16.1G< 16.3C
PS_FBVDD_NV* 16.4A
PS_FBVDD_PHASE 16.1G< 16.3C
PS_FBVDD_SNUB 16.1G< 16.3F
PS_FBVDD_UG 16.1G< 16.3C
PS_FBVDD_UG_R 16.1G< 16.2D
PS_FBVDD_VCC 16.1G< 16.2B
PS_NVVDD_BOOT 17.1G< 17.2C
PS_NVVDD_BOOT_RC 17.1G< 17.2D
PS_NVVDD_CP_RC 17.1G< 17.4C
PS_NVVDD_EN 17.1G< 17.3B
PS_NVVDD_EN* 17.1G< 17.4B
PS_NVVDD_FB 17.1G< 17.3C
PS_NVVDD_FB_RC 17.1G< 17.3F
PS_NVVDD_LG 17.1G< 17.3C
PS_NVVDD_PHASE 17.1G< 17.3C
PS_NVVDD_SNUB 17.1G< 17.3F
PS_NVVDD_UG 17.1G< 17.3C
PS_NVVDD_UG_R 17.1G< 17.2D
PS_NVVDD_VCC 17.1G< 17.2B
PS_PEXVDD_CNTL 15.1G< 15.4E
PS_PEXVDD_FB 15.1G< 15.4F
ROM_CS* 13.2G< 13.3D
ROM_SCLK 13.2G< 13.3D< 14.4B>
14.4C
ROM_SI 13.2G< 13.3D< 14.3B>
14.3C
ROM_SO 13.2G< 13.3D< 14.3B>
14.3C
SNN_3V3_AUX 3.1B
SNN_BBIASN 13.3C
SNN_BBIASP 13.3C
SNN_CEC 13.3C
SNN_FBA0_A1 5.3A
SNN_FBA0_A11 5.3A
SNN_FBA0_J2 5.3A
SNN_FBA0_J10 5.3A
SNN_FBA0_L0 5.3A
SNN_FBA0_L8 5.3A
SNN_FBA0_M8 5.2A
SNN_FBA0_T1 5.3A
SNN_FBA0_T8 5.2A

SNN_FBA0_T11 5.3A
SNN_FBA1_A1 5.3C
SNN_FBA1_A11 5.3C
SNN_FBA1_J2 5.3C
SNN_FBA1_J10 5.3C
SNN_FBA1_L2 5.3C
SNN_FBA1_L10 5.3C
SNN_FBA1_M8 5.2C
SNN_FBA1_T1 5.3C
SNN_FBA1_T8 5.2C
SNN_FBA1_T11 5.3C
SNN_FBA2_A1 5.3E
SNN_FBA2_A11 5.3E
SNN_FBA2_J2 5.3E
SNN_FBA2_J10 5.3E
SNN_FBA2_L2 5.3E
SNN_FBA2_L10 5.3E
SNN_FBA2_M8 5.2E
SNN_FBA2_T1 5.3E
SNN_FBA2_T8 5.2E
SNN_FBA2_T11 5.3E
SNN_FBA3_A1 5.3F
SNN_FBA3_A11 5.3F
SNN_FBA3_J2 5.3F
SNN_FBA3_J10 5.3F
SNN_FBA3_L2 5.3F
SNN_FBA3_L10 5.3F
SNN_FBA3_M8 5.2F
SNN_FBA3_T1 5.3F
SNN_FBA3_T8 5.2F
SNN_FBA3_T11 5.3F
SNN_FBB_CMD1 4.3C
SNN_FBB_CMD4 4.3C
SNN_FBB_CMD14 4.3C
SNN_FBB_CMD17 4.3C
SNN_FBB_CMD31 4.4C
SNN_FBB_WCK0 4.4A
SNN_FBB_WCK1 4.4A
SNN_FBB_WCK2 4.4A
SNN_FBB_WCK3 4.4A
SNN_FBB_WCKN0 4.4A
SNN_FBB_WCKN1 4.4A
SNN_FBB_WCKN2 4.4A
SNN_FBB_WCKN3 4.4A
SNN_FBB0_A1 6.3A
SNN_FBB0_A11 6.3A
SNN_FBB0_J2 6.3A
SNN_FBB0_J10 6.3A
SNN_FBB0_L2 6.3A
SNN_FBB0_L10 6.3A
SNN_FBB0_M8 6.2A
SNN_FBB0_T1 6.3A
SNN_FBB0_T8 6.2A
SNN_FBB0_T11 6.3A
SNN_FBB1_A1 6.3C
SNN_FBB1_A11 6.3C
SNN_FBB1_J2 6.3C
SNN_FBB1_J10 6.3C
SNN_FBB1_L2 6.3C
SNN_FBB1_L10 6.3C
SNN_FBB1_M8 6.2C
SNN_FBB1_T1 6.3C
SNN_FBB1_T8 6.2C
SNN_FBB1_T11 6.3C
SNN_FBB2_A1 6.3E
SNN_FBB2_A11 6.3E
SNN_FBB2_J2 6.3E
SNN_FBB2_J10 6.3E
SNN_FBB2_L2 6.3E
SNN_FBB2_L10 6.3E
SNN_FBB2_M8 6.2E
SNN_FBB2_T1 6.3E
SNN_FBB2_T8 6.2E
SNN_FBB2_T11 6.3E
SNN_FBB3_A1 6.3F
SNN_FBB3_A11 6.3F
SNN_FBB3_J2 6.3F
SNN_FBB3_J10 6.3F
SNN_FBB3_L2 6.3F
SNN_FBB3_L10 6.3F
SNN_FBB3_M8 6.2F
SNN_FBB3_T1 6.3F
SNN_FBB3_T8 6.2F
SNN_FBB3_T11 6.3F
SNN_FBB_CMD1 4.3G
SNN_FBB_CMD4 4.3G
SNN_FBB_CMD14 4.3G
SNN_FBB_CMD17 4.3G
SNN_FBB_CMD31 4.4G
SNN_FBB_WCK0 4.4E
SNN_FBB_WCK1 4.4E
SNN_FBB_WCK2 4.4E
SNN_FBB_WCK3 4.4E
SNN_FBB_WCKN0 4.4E
SNN_FBB_WCKN1 4.4E
SNN_FBB_WCKN2 4.4E
SNN_FBB_WCKN3 4.4E

ASSEMBLY	BASE LEVEL GENERIC SCHEMATIC ONLY, COMMON & NO_STUFF ASSEMBLY NOTES AND BOM NOT FINAL
PAGE DETAIL	<edit here to insert page detail>

ALL NVIDIA DESIGN SPECIFICATIONS, REFERENCE SPECIFICATIONS, REFERENCE BOARDS, FILES, DRAWINGS, DIAGNOSTICS, LISTS AND OTHER DOCUMENTS OR INFORMATION (TOGETHER AND SEPARATELY, 'MATERIALS') ARE BEING PROVIDED 'AS IS'. THE MATERIALS MAY CONTAIN KNOWN AND UNKNOWN VIOLATIONS OR DEVIATIONS OF INDUSTRY STANDARDS AND SPECIFICATIONS. NVIDIA MAKES NO WARRANTIES, EXPRESSED, IMPLIED, STATUTORY OR OTHERWISE WITH RESPECT TO THE MATERIALS OR OTHERWISE, AND EXPRESSLY DISCLAIMS ALL IMPLIED WARRANTIES INCLUDING, WITHOUT LIMITATION, THE WARRANTIES OF DESIGN, OF NONINFRINGEMENT, MERCHANTABILITY OR FITNESS FOR A PARTICULAR PURPOSE, OR ARISING FROM A COURSE OF DEALING, TRADE USAGE, TRADE PRACTICE, OR INDUSTRY STANDARDS.

NVIDIA CORPORATION
2701 SAN TOMAS EXPRESSWAY
SANTA CLARA, CA 95050, USA

NV_PN	600-11071-BASE-SCH		
PCB REV	P1071-A00	PAGE	<CON_PAGE_NUM> OF <CON_TOTAL_PAGES>
BOM REV	A	DATE	10-FEB-2010

0073460 MSI 杨凯 CONFIDENTIAL FOR PCMA(深圳) 2011-09-01 ONLY

SNN_FB_DLLAVDD 4.5C
SNN_FB_PLLAVDD 4.5C
SNN_FB_VREF 4.5A
SNN_GPIO1 12.3B
SNN_GPIO3 13.2D
SNN_GPIO9 13.2D
SNN_GPIO10 13.2D
SNN_GPIO11 13.2D
SNN_GPIO12 13.2D
SNN_GPIO13 13.2D
SNN_GPIO14 13.2D
SNN_GPIO15 11.3D
SNN_GPIO17 13.2D
SNN_GPIO18 13.2D
SNN_GPIO19 12.4B
SNN_GPIO20 13.2D
SNN_GPIO22 13.2D
SNN_GPIO23 13.2D
SNN_GPIO24 13.2D
SNN_GPU_A2 3.2F
SNN_GPU_A7 3.2F
SNN_GPU_AA4 3.2F
SNN_GPU_AB4 3.2F
SNN_GPU_AB7 3.3F
SNN_GPU_AC5 3.3F
SNN_GPU_AD6 3.3F
SNN_GPU_AF6 3.3F
SNN_GPU_AG6 3.3F
SNN_GPU_AJ5 3.3F
SNN_GPU_AK15 3.3F
SNN_GPU_AL7 3.3F
SNN_GPU_B7 3.3F
SNN_GPU_C7 3.3F
SNN_GPU_D5 3.3F
SNN_GPU_D6 3.3F
SNN_GPU_D7 3.3F
SNN_GPU_E5 3.3F
SNN_GPU_E7 3.3F
SNN_GPU_F4 3.3F
SNN_GPU_G5 3.3F
SNN_GPU_H32 3.3F
SNN_GPU_P6 3.3F
SNN_GPU_U7 3.3F
SNN_GPU_V6 3.3F
SNN_GPU_Y4 3.3F
SNN_HDMI_CEC 11.3G
SNN_HDMI_RSVD 11.3G
SNN_I2CH_SCL 13.3D
SNN_I2CH_SDA 13.3D
SNN_I2CS_SCL 13.1D
SNN_I2CS_SDA 13.1D
SNN_IFPA_TXD3 10.3D
SNN_IFPA_TXD3* 10.2D
SNN_IFPB_TXC 10.3D
SNN_IFPB_TXC* 10.3D
SNN_IFPB_TXD7 10.3D
SNN_IFPB_TXD7* 10.3D
SNN_IFPC_AUX 12.2B
SNN_IFPC_AUX* 12.2B
SNN_IFPC_L0 12.3B
SNN_IFPC_L0* 12.3B
SNN_IFPC_L1 12.2B
SNN_IFPC_L1* 12.2B
SNN_IFPC_L2 12.2B
SNN_IFPC_L2* 12.2B
SNN_IFPC_L3 12.2B
SNN_IFPC_L3* 12.2B
SNN_IFPC_RSET 12.2A
SNN_IFPD_AUX 12.4B
SNN_IFPD_AUX* 12.4B
SNN_IFPD_L0 12.4B
SNN_IFPD_L0* 12.4B
SNN_IFPD_L1 12.4B
SNN_IFPD_L1* 12.4B
SNN_IFPD_L2 12.4B
SNN_IFPD_L2* 12.4B
SNN_IFPD_L3 12.4B
SNN_IFPD_L3* 12.4B
SNN_IFPD_RSET 12.4A
SNN_IFPE_AUX 11.2D
SNN_IFPE_AUX* 11.2D
SNN_IFPE_L0 11.3D
SNN_IFPE_L0* 11.3D
SNN_IFPE_L1 11.3D
SNN_IFPE_L1* 11.3D
SNN_IFPE_L2 11.3D
SNN_IFPE_L2* 11.3D
SNN_IFPE_L3 11.2D
SNN_IFPE_L3* 11.2D
SNN_MIOACAL_PD_VDD 12.2C
Q
SNN_MIOACAL_PU_GND 12.2C
SNN_MIOAD0 12.2D
SNN_MIOAD1 12.2D
SNN_MIOAD2 12.2D
SNN_MIOAD3 12.2D
SNN_MIOAD4 12.2D
SNN_MIOAD5 12.2D
SNN_MIOAD6 12.2D
SNN_MIOAD7 12.2D
SNN_MIOAD8 12.2D

SNN_MIOAD9 12.2D
SNN_MIOAD10 12.2D
SNN_MIOAD11 12.2D
SNN_MIOAD12 12.2D
SNN_MIOAD13 12.2D
SNN_MIOAD14 12.2D
SNN_MIOA_CLKIN 12.3D
SNN_MIOA_CLKOUT 12.3D
SNN_MIOA_CLKOUT* 12.3D
SNN_MIOA_CTL3 12.3D
SNN_MIOA_DE 12.3D
SNN_MIOA_HSYNC 12.3D
SNN_MIOA_VDDQ_P9 12.2C
SNN_MIOA_VDDQ_R9 12.2C
SNN_MIOA_VDDQ_T9 12.2C
SNN_MIOA_VDDQ_U9 12.2C
SNN_MIOA_VREF 12.2C
SNN_MIOA_VSYNC 12.3D
SNN_MIOBCAL_PD_VDD 12.4C
Q
SNN_MIOBCAL_PU_GND 12.4C
SNN_MIOBD0 12.3D
SNN_MIOBD1 12.3D
SNN_MIOBD2 12.4D
SNN_MIOBD3 12.4D
SNN_MIOBD4 12.4D
SNN_MIOBD5 12.4D
SNN_MIOBD6 12.4D
SNN_MIOBD7 12.4D
SNN_MIOBD8 12.4D
SNN_MIOBD9 12.4D
SNN_MIOBD10 12.4D
SNN_MIOBD11 12.4D
SNN_MIOBD12 12.4D
SNN_MIOBD13 12.4D
SNN_MIOBD14 12.4D
SNN_MIOB_CLKIN 12.5D
SNN_MIOB_CLKOUT 12.4D
SNN_MIOB_CLKOUT* 12.4D
SNN_MIOB_CTL3 12.4D
SNN_MIOB_DE 12.4D
SNN_MIOB_HSYNC 12.4D
SNN_MIOB_VDDQ_AA9 12.3C
SNN_MIOB_VDDQ_AB9 12.3C
SNN_MIOB_VDDQ_W9 12.4C
SNN_MIOB_VDDQ_Y9 12.4C
SNN_MIOB_VREF 12.4C
SNN_MIOB_VSYNC 12.4D
SNN_NVVDD_SENSE_1 3.4F
SNN_NVVDD_SENSE_3 3.4F
SNN_PEX_CLKREQ* 3.1D
SNN_PEX_PLL_HVDD 3.5F
SNN_PEX_TSTCLK_OUT 3.2D
SNN_PEX_TSTCLK_OUT 3.2D
-
SNN_PGOOD_OUT 13.4D
SNN_PS_PEXVDD_NC 15.4E
SNN_PS_PEXVDD_POK 15.4E
SNN_SMCLK 3.1C
SNN_SMDAT 3.1C
SNN_SPDIF 13.4D
SNN_SVDD_3V3 3.2F
SNN_XTAL_OUTBUFF 13.5D
STRAP0 13.2G< 13.3D< 14.4C
14.5B>
STRAP1 13.2G< 13.3D< 14.4B>
14.4C
STRAP2 13.2G< 13.3D< 14.4B>
14.4C
STRAP_REF0 13.1G< 13.4C
STRAP_REF1 13.1G< 13.4C
SYS_RST 15.1G< 15.3B< 15.3F>
SYS_RST* 15.1G< 15.3F
THERMDN 13.1C 13.1G<
THERMDP 13.1G< 13.2C
THERM_N 15.1G< 15.3C
THERM_P 15.1G< 15.3C
THERM_P* 15.1G< 15.2C
THERM_SHUTDOWN* 15.1G> 15.2D> 17.4A<
XTAL_IN 13.1G< 13.5B
XTAL_OUT 13.1G< 13.5D
XTAL_SSIN 13.1G< 13.5B

0073469 FOR MSI CONFIDENTIAL 杨婉菲 RD(C)20111109001 RMA(丁德基) ONLY

ASSEMBLY	BASE LEVEL GENERIC SCHEMATIC ONLY, COMMON & NO_STUFF ASSEMBLY NOTES AND BOM NOT FINAL
PAGE DETAIL	<edit here to insert page detail>

ALL NVIDIA DESIGN SPECIFICATIONS, REFERENCE SPECIFICATIONS, REFERENCE BOARDS, FILES, DRAWINGS, DIAGNOSTICS, LISTS AND OTHER DOCUMENTS OR INFORMATION (TOGETHER AND SEPARATELY, 'MATERIALS') ARE BEING PROVIDED 'AS IS'. THE MATERIALS MAY CONTAIN KNOWN AND UNKNOWN VIOLATIONS OR DEVIATIONS OF INDUSTRY STANDARDS AND SPECIFICATIONS. NVIDIA MAKES NO WARRANTIES, EXPRESSED, IMPLIED, STATUTORY OR OTHERWISE WITH RESPECT TO THE MATERIALS OR OTHERWISE, AND EXPRESSLY DISCLAIMS ALL IMPLIED WARRANTIES INCLUDING, WITHOUT LIMITATION, THE WARRANTIES OF DESIGN, OF NONINFRINGEMENT, MERCHANTABILITY OR FITNESS FOR A PARTICULAR PURPOSE, OR ARISING FROM A COURSE OF DEALING, TRADE USAGE, TRADE PRACTICE, OR INDUSTRY STANDARDS.

NVIDIA CORPORATION
2701 SAN TOMAS EXPRESSWAY
SANTA CLARA, CA 95050, USA

NV_PN	600-11071-BASE-SCH		
PCB REV	P1071-A00	PAGE	<CON_PAGE_NUM> OF <CON_TOTAL_PAGES>
BOM REV	A	DATE	10-FEB-2010

Title: Cref Part Report
Design: p1071_a00
Date: Feb 10 12:52:26 2010

BKT1 [14.4F]
C1 [10.2F]
C2 [10.4F]
C3 [11.4F]
C4 [11.4F]
C5 [10.4F]
C6 [10.4E]
C7 [11.3G]
C8 [8.3C]
C9 [11.3E]
C10 [11.3E]
C11 [11.3E]
C12 [11.3E]
C13 [11.4E]
C14 [11.3E]
C15 [11.3E]
C16 [11.3E]
C17 [11.4E]
C18 [9.3F]
C19 [15.4C]
C20 [15.4C]
C21 [17.3F]
C22 [17.1F]
C23 [15.4B]
C24 [16.2E]
C25 [17.2E]
C26 [17.1F]
C27 [17.1E]
C28 [3.1B]
C29 [16.3G]
C30 [16.3H]
C31 [17.3H]
C32 [17.3H]
C33 [17.3G]
C34 [17.3G]
C35 [16.3F]
C36 [15.4D]
C37 [15.4E]
C38 [3.1A]
C39 [3.1A]
C40 [15.1B]
C41 [13.5D]
C42 [15.4E]
C43 [13.3E]
C44 [15.1C]
C45 [13.5B]
C46 [15.4G]
C47 [15.4H]
C48 [6.4C]
C49 [15.4G]
C50 [3.1G]
C51 [15.4G]
C52 [7.2D]
C53 [6.4D]
C54 [7.3F]
C55 [7.3E]
C56 [7.3D]
C57 [7.2E]
C58 [7.3D]
C59 [7.3D]
C60 [7.3D]
C61 [7.3E]
C62 [6.4H]
C63 [7.3F]
C64 [7.3E]
C65 [6.5C]
C66 [7.2B]
C67 [7.2C]
C68 [7.3C]
C69 [7.3C]
C70 [5.4H]
C71 [7.3B]
C72 [7.3B]
C73 [7.3A]
C74 [7.3B]
C75 [7.2C]
C76 [7.3C]
C77 [7.3C]
C78 [7.3C]
C79 [17.2F]
C80 [17.2F]
C81 [17.2F]
C82 [17.2G]
C501 [7.2C]
C502 [7.3B]
C503 [7.3B]
C504 [7.2B]
C505 [7.3B]
C506 [7.3C]
C507 [5.4D]
C508 [5.5C]
C509 [5.4C]
C510 [7.3C]
C511 [7.3B]

C512 [7.2C]
C513 [7.3C]
C514 [7.3A]
C515 [7.2B]
C516 [7.3A]
C517 [7.3C]
C518 [7.2A]
C519 [7.3B]
C520 [7.3C]
C521 [7.3C]
C522 [7.3C]
C523 [7.3B]
C524 [3.5D]
C525 [3.5D]
C526 [3.5D]
C527 [3.5D]
C528 [3.5D]
C529 [3.5D]
C530 [7.3E]
C531 [7.3E]
C532 [7.3E]
C533 [3.4D]
C534 [3.4D]
C535 [7.3F]
C536 [7.3E]
C537 [3.4D]
C538 [3.4D]
C539 [7.3D]
C540 [7.3E]
C541 [3.4D]
C542 [3.4D]
C543 [3.4D]
C544 [3.4D]
C545 [4.1C]
C546 [3.4D]
C547 [4.1D]
C548 [4.1C]
C549 [4.1D]
C550 [7.3D]
C551 [4.1D]
C552 [4.5D]
C553 [4.5C]
C554 [3.4D]
C555 [7.3E]
C556 [4.1C]
C557 [4.5D]
C558 [3.1F]
C559 [4.1D]
C560 [12.3G]
C561 [3.3D]
C562 [3.3D]
C563 [12.3G]
C564 [3.1F]
C565 [3.1F]
C566 [12.4F]
C567 [12.2G]
C568 [12.2G]
C569 [3.1F]
C570 [4.1C]
C571 [12.3G]
C572 [12.3G]
C573 [12.3F]
C574 [12.2F]
C575 [12.2F]
C576 [3.2F]
C577 [3.2F]
C578 [3.3D]
C579 [3.3D]
C580 [3.1F]
C581 [12.3G]
C582 [12.4G]
C583 [17.3G]
C584 [3.2F]
C585 [3.1G]
C586 [12.3F]
C587 [12.2F]
C588 [12.3F]
C589 [12.3F]
C590 [3.1F]
C591 [12.4F]
C592 [4.1D]
C593 [12.2G]
C594 [3.3D]
C595 [3.3D]
C596 [3.4F]
C597 [8.3A]
C598 [12.2G]
C599 [8.3B]
C600 [12.2F]
C601 [3.4F]
C602 [4.1D]
C603 [13.4B]
C604 [3.2F]
C605 [3.2G]
C606 [12.3G]
C607 [12.3F]
C608 [12.3F]
C609 [10.3B]
C610 [3.3F]
C611 [13.4B]
C612 [7.3E]

C613 [7.3E]
C614 [10.3B]
C615 [10.3B]
C616 [13.4B]
C617 [10.3C]
C618 [3.3D]
C619 [3.3D]
C620 [3.3F]
C621 [9.3B]
C622 [10.3B]
C623 [3.2F]
C624 [13.4A]
C625 [3.4G]
C626 [11.3C]
C627 [8.3A]
C628 [9.3A]
C629 [11.3B]
C630 [9.3A]
C631 [13.3B]
C632 [3.4G]
C633 [11.3B]
C634 [11.3B]
C635 [3.3D]
C636 [3.3D]
C637 [11.3B]
C638 [7.2E]
C639 [10.3B]
C640 [7.2E]
C641 [7.2F]
C642 [10.3B]
C643 [7.3D]
C644 [7.3E]
C645 [3.2D]
C646 [3.2D]
C647 [15.1F]
C648 [7.2E]
C649 [3.2D]
C650 [3.2D]
C651 [7.2D]
C652 [15.3F]
C653 [7.3D]
C654 [7.3D]
C655 [7.2D]
C656 [15.2E]
C657 [3.2D]
C658 [3.2D]
C659 [15.3C]
C660 [13.2A]
C661 [15.2C]
C662 [14.2B]
C663 [16.3G]
C664 [17.3G]
C665 [17.3G]
C666 [17.1F]
C667 [17.1F]
C668 [3.1B]
C669 [14.2C]
C670 [13.2F]
C671 [17.4A]
C672 [14.2B]
C673 [9.5E]
C674 [9.5E]
C675 [16.3B]
C676 [14.2D]
C677 [9.4E]
C678 [9.4E]
C679 [16.2D]
C680 [9.4E]
C681 [9.4E]
C682 [16.3D]
C683 [16.3F]
C684 [16.4D]
C685 [16.4C]
C686 [17.3B]
C687 [17.2D]
C688 [17.3D]
C689 [17.3F]
C690 [17.4C]
C691 [8.5E]
C692 [8.4E]
C693 [8.4E]
C694 [17.4G]
C695 [17.4D]
C696 [8.5E]
C697 [8.4E]
C698 [8.4E]
CN1 [3.3C]
D1 [10.4E]
D2 [11.4E]
D3 [17.3F]
D4 [17.3F]
D5 [15.4A]
D6 [16.3E]
D7 [16.3F]
D501 [14.2E]
D502 [13.1G]
D503 [16.2C]
D504 [17.2C]
F1 [15.4D]
G1 [3.3E]
G1 [4.3B 4.3F]

G1 [8.3C]
G1 [9.3C]
G1 [10.3D]
G1 [11.3D]
G1 [12.3H 12.3E 12.4D 12.4B 12.2D 12.3B]
G1 [13.3C 13.4C 13.2C]
J1 [11.3H]
J2 [10.3G]
J3 [9.3G]
J4 [14.2F]
J5 [14.2D]
J501 [13.2A]
L1 [17.3F]
L2 [16.3F]
L3 [17.2F]
L4 [16.2F]
L501 [3.4G]
L502 [9.5E]
L503 [9.4E]
L504 [9.3E]
L505 [8.5E]
L506 [8.3E]
L507 [8.4E]
LB1 [15.1C]
LB501 [4.5D]
LB502 [11.3B]
LB503 [10.3B]
LB504 [13.4A]
LB505 [11.2B]
LB506 [10.2B]
LB507 [15.1E]
M1 [6.2G 6.5D 6.4F]
M2 [6.5F 6.2B 6.4D]
M3 [6.4G 6.2F 6.5H]
M4 [6.5G 6.4H 6.2D]
M5 [5.4F 5.5D 5.2D]
M6 [5.2B 5.4D 5.5F]
M7 [5.5H 5.2G 5.4G]
M8 [5.5G 5.2F 5.4H]
MEC1 [14.3F]
MEC2 [14.3F]
MEC3 [9.4G]
MEC4 [14.3F]
MEC5 [14.4F]
MEC6 [14.4F]
MEC7 [14.4F]
Q1 [17.4E]
Q2 [17.5E]
Q3 [17.5F]
Q4 [17.4F]
Q5 [11.2F]
Q6 [11.3F]
Q7 [17.3E]
Q8 [17.3E]
Q9 [17.2E]
Q10 [16.3E 16.2E]
Q501 [15.3G]
Q502 [15.3F]
Q503 [15.3C]
Q504 [15.2C]
Q505 [14.2B]
Q506 [17.4B]
Q507 [16.4B]
Q508 [16.4B]
Q509 [11.5C]
Q510 [17.4B]
R1 [15.4D]
R2 [10.4F]
R3 [11.4F]
R4 [8.1D]
R5 [11.4E]
R6 [17.4E]
R7 [17.4E]
R8 [17.4F]
R9 [17.4F]
R10 [10.4E]
R11 [8.2D]
R12 [10.4E]
R13 [11.2F]
R14 [11.3F]
R15 [11.4E]
R16 [8.2D]
R17 [9.2D]
R18 [8.2D]
R19 [9.2D]
R20 [9.2D]
R21 [8.3D]
R22 [9.3D]
R23 [9.1D]
R24 [8.3D]

R25 [9.3D]
R26 [17.3E]
R27 [11.2E]
R28 [11.3E]
R29 [17.3F]
R30 [15.4A]
R31 [15.4B]
R32 [16.2D]
R33 [16.3E]
R34 [16.3F]
R35 [15.4E]
R36 [14.3B]
R37 [14.3C]
R38 [15.4E]
R39 [14.4B]
R40 [14.3C]
R41 [14.4C]
R42 [14.3B]
R43 [15.4G]
R44 [13.3E]
R45 [15.4G]
R46 [6.4C]
R47 [6.4B]
R48 [6.4B]
R49 [6.4B]
R50 [14.4B]
R51 [14.4C]
R52 [4.4H]
R53 [14.4C]
R54 [14.5C]
R55 [13.4B]
R56 [13.4B]
R57 [10.3C]
R58 [14.4B]
R59 [14.5B]
R60 [6.3D]
R61 [6.4D]
R62 [6.3E]
R63 [6.4H]
R64 [6.3H]
R65 [6.5B]
R66 [6.5B]
R67 [6.5B]
R68 [6.5C]
R69 [5.4H]
R70 [5.3H]
R71 [6.4D]
R72 [5.3C]
R73 [5.3A]
R74 [5.3F]
R75 [5.3E]
R501 [4.3D]
R502 [5.5C]
R503 [5.4C]
R504 [4.4D]
R505 [5.3B]
R506 [5.4B]
R507 [5.5B]
R508 [5.4B]
R509 [5.5B]
R510 [5.4B]
R511 [4.3D]
R512 [4.4B]
R513 [4.4H]
R514 [6.3F]
R515 [4.4H]
R516 [3.5F]
R517 [4.5G]
R518 [4.5G]
R519 [4.5G]
R520 [3.5F]
R521 [8.3B]
R522 [8.4D]
R523 [8.4D]
R524 [8.5D]
R525 [9.3B]
R526 [8.3A]
R527 [6.3A]
R528 [9.4D]
R529 [9.4D]
R530 [9.5D]
R531 [11.3C]
R532 [13.5B]
R533 [4.3H]
R534 [15.3G]
R535 [15.3F]
R536 [6.3C]
R537 [4.3H]
R538 [13.2B]
R539 [13.2B]
R540 [13.2B]
R541 [15.3F]
R542 [15.3C]
R543 [15.3C]
R544 [15.3F]
R545 [15.2C]
R546 [15.2C]
R547 [15.2C]
R548 [13.2B]
R549 [17.4D]
R550 [17.5D]

R551 [17.5G]
R552 [17.4G]
R553 [13.2B]
R554 [13.2B]
R555 [17.4D]
R556 [17.5D]
R557 [17.5G]
R558 [17.4G]
R559 [14.2F]
R560 [14.2F]
R561 [13.2E]
R562 [13.1E]
R563 [13.1E]
R564 [13.1E]
R565 [14.2C]
R566 [14.2C]
R567 [14.2D]
R568 [17.4A]
R569 [14.1C]
R570 [17.4B]
R571 [9.5D]
R572 [16.2B]
R573 [9.4D]
R574 [16.2D]
R575 [17.2D]
R576 [16.3G]
R577 [16.4F]
R578 [9.4D]
R579 [16.4D]
R580 [16.4E]
R581 [16.3F]
R582 [16.4B]
R583 [16.4A]
R584 [16.3C]
R585 [17.2D]
R586 [16.4D]
R587 [17.2B]
R588 [17.3C]
R589 [17.3G]
R590 [8.5D]
R591 [8.4D]
R592 [8.4D]
R593 [17.4G]
R594 [11.4C]
R595 [11.4C]
R596 [11.4C]
R597 [11.4C]
R598 [17.4D]
R599 [17.3F]
R600 [17.4B]
R601 [17.4F]
R602 [17.4D]
R603 [11.5C]
R604 [11.5C]
R605 [11.4C]
R606 [11.4C]
TP1 [13.1C]
TP2 [13.2C]
TP3 [4.4G]
TP4 [4.4G]
TP5 [4.4C]
TP6 [4.4C]
U1 [9.3D 9.2D]
U1 [9.3D 9.2D]
U2 [15.4C]
U3 [15.5C]
U4 [15.4F]
U5 [13.3E]
U501 [15.3E]
U502 [13.1F]
U503 [14.2C]
U504 [16.3C]
U505 [17.3C]
Y1 [13.5C]
Y2 [13.5C]

ASSEMBLY	BASE LEVEL GENERIC SCHEMATIC ONLY, COMMON & NO_STUFF ASSEMBLY NOTES AND BOM NOT FINAL
PAGE DETAIL	<edit here to insert page detail>

ALL NVIDIA DESIGN SPECIFICATIONS, REFERENCE SPECIFICATIONS, REFERENCE BOARDS, FILES, DRAWINGS, DIAGNOSTICS, LISTS AND OTHER DOCUMENTS OR INFORMATION (TOGETHER AND SEPARATELY, 'MATERIALS') ARE BEING PROVIDED 'AS IS'. THE MATERIALS MAY CONTAIN KNOWN AND UNKNOWN VIOLATIONS OR DEVIATIONS OF INDUSTRY STANDARDS AND SPECIFICATIONS. NVIDIA MAKES NO WARRANTIES, EXPRESSED, IMPLIED, STATUTORY OR OTHERWISE WITH RESPECT TO THE MATERIALS OR OTHERWISE, AND EXPRESSLY DISCLAIMS ALL IMPLIED WARRANTIES INCLUDING, WITHOUT LIMITATION, THE WARRANTIES OF DESIGN, OF NONINFRINGEMENT, MERCHANTABILITY OR FITNESS FOR A PARTICULAR PURPOSE, OR ARISING FROM A COURSE OF DEALING, TRADE USAGE, TRADE PRACTICE, OR INDUSTRY STANDARDS.

NVIDIA CORPORATION
2701 SAN TOMAS EXPRESSWAY
SANTA CLARA, CA 95050, USA

NV_PN	600-11071-BASE-SCH		
PCB REV	P1071-A00	PAGE	<CON_PAGE_NUM> OF <CON_TOTAL_PAGES>
BOM REV	A	DATE	10-FEB-2010

2007246901 FOR RMA 杨先生 MSI CONFIDENTIAL RD(C)20111109001 ONLY