(2) CURACAO PCIE INTERFACE

SOME PCIE TEST POINTS ARE
AVAILABLE THROUGH VIAS ON TRACES

FOR BARTS, USE 100NF PN 4171010400G

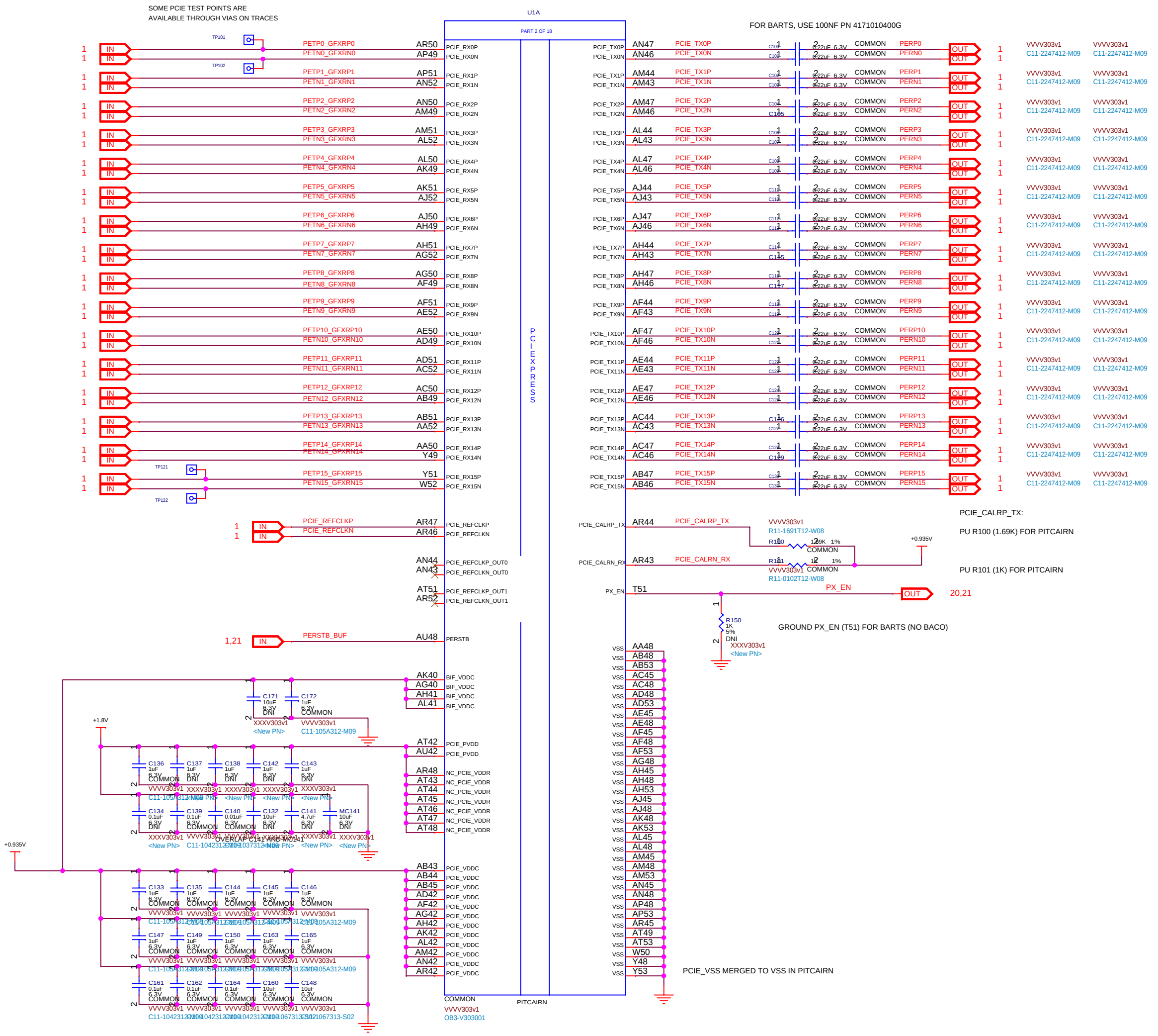
U1A
PART 2 OF 18
PCI EXPRESS
PITCAIRN
COMMON
VVVV303v1
OB3-V303001
TP101
TP102
TP121
TP122
IN
OUT
1
PETP0_GFXRP0 AR50 PCIE_RX0P
PETN0_GFXRN0 AP49 PCIE_RX0N
PETP1_GFXRP1 AP51 PCIE_RX1P
PETN1_GFXRN1 AN52 PCIE_RX1N
PETP2_GFXRP2 AN50 PCIE_RX2P
PETN2_GFXRN2 AM49 PCIE_RX2N
PETP3_GFXRP3 AM51 PCIE_RX3P
PETN3_GFXRN3 AL52 PCIE_RX3N
PETP4_GFXRP4 AL50 PCIE_RX4P
PETN4_GFXRN4 AK49 PCIE_RX4N
PETP5_GFXRP5 AK51 PCIE_RX5P
PETN5_GFXRN5 AJ52 PCIE_RX5N
PETP6_GFXRP6 AJ50 PCIE_RX6P
PETN6_GFXRN6 AH49 PCIE_RX6N
PETP7_GFXRP7 AH51 PCIE_RX7P
PETN7_GFXRN7 AG52 PCIE_RX7N
PETP8_GFXRP8 AG50 PCIE_RX8P
PETN8_GFXRN8 AF49 PCIE_RX8N
PETP9_GFXRP9 AF51 PCIE_RX9P
PETN9_GFXRN9 AE52 PCIE_RX9N
PETP10_GFXRP10 AE50 PCIE_RX10P
PETN10_GFXRN10 AD49 PCIE_RX10N
PETP11_GFXRP11 AD51 PCIE_RX11P
PETN11_GFXRN11 AC52 PCIE_RX11N
PETP12_GFXRP12 AC50 PCIE_RX12P
PETN12_GFXRN12 AB49 PCIE_RX12N
PETP13_GFXRP13 AB51 PCIE_RX13P
PETN13_GFXRN13 AA52 PCIE_RX13N
PETP14_GFXRP14 AA50 PCIE_RX14P
PETN14_GFXRN14 Y49 PCIE_RX14N
PETP15_GFXRP15 Y51 PCIE_RX15P
PETN15_GFXRN15 W52 PCIE_RX15N
PCIE_REFCLKP AR47 PCIE_REFCLKP
PCIE_REFCLKN AR46 PCIE_REFCLKN
AN44 PCIE_REFCLKP_OUT0
AN43 PCIE_REFCLKN_OUT0
AT51 PCIE_REFCLKP_OUT1
AR52 PCIE_REFCLKN_OUT1
1,21
PERSTB_BUF AU48 PERSTB
AK40 BIF_VDDC
AG40 BIF_VDDC
AH41 BIF_VDDC
AL41 BIF_VDDC
AT42 PCIE_PVDD
AU42 PCIE_PVDD
AR48 NC_PCIE_VDDR
AT43 NC_PCIE_VDDR
AT44 NC_PCIE_VDDR
AT45 NC_PCIE_VDDR
AT46 NC_PCIE_VDDR
AT47 NC_PCIE_VDDR
AT48 NC_PCIE_VDDR
AB43 PCIE_VDDC
AB44 PCIE_VDDC
AB45 PCIE_VDDC
AD42 PCIE_VDDC
AF42 PCIE_VDDC
AG42 PCIE_VDDC
AH42 PCIE_VDDC
AK42 PCIE_VDDC
AL42 PCIE_VDDC
AM42 PCIE_VDDC
AN42 PCIE_VDDC
AR42 PCIE_VDDC
PCIE_TX0P AN47 PCIE_TX0P C100 0.22uF 6.3V COMMON PERP0
PCIE_TX0N AN46 PCIE_TX0N C101 0.22uF 6.3V COMMON PERN0
PCIE_TX1P AM44 PCIE_TX1P C102 0.22uF 6.3V COMMON PERP1
PCIE_TX1N AM43 PCIE_TX1N C103 0.22uF 6.3V COMMON PERN1
PCIE_TX2P AM47 PCIE_TX2P C104 0.22uF 6.3V COMMON PERP2
PCIE_TX2N AM46 PCIE_TX2N C105 0.22uF 6.3V COMMON PERN2
PCIE_TX3P AL44 PCIE_TX3P C106 0.22uF 6.3V COMMON PERP3
PCIE_TX3N AL43 PCIE_TX3N C107 0.22uF 6.3V COMMON PERN3
PCIE_TX4P AL47 PCIE_TX4P C108 0.22uF 6.3V COMMON PERP4
PCIE_TX4N AL46 PCIE_TX4N C109 0.22uF 6.3V COMMON PERN4
PCIE_TX5P AJ44 PCIE_TX5P C111 0.22uF 6.3V COMMON PERP5
PCIE_TX5N AJ43 PCIE_TX5N C110 0.22uF 6.3V COMMON PERN5
PCIE_TX6P AJ47 PCIE_TX6P C112 0.22uF 6.3V COMMON PERP6
PCIE_TX6N AJ46 PCIE_TX6N C113 0.22uF 6.3V COMMON PERN6
PCIE_TX7P AH44 PCIE_TX7P C114 0.22uF 6.3V COMMON PERP7
PCIE_TX7N AH43 PCIE_TX7N C115 0.22uF 6.3V COMMON PERN7
PCIE_TX8P AH47 PCIE_TX8P C116 0.22uF 6.3V COMMON PERP8
PCIE_TX8N AH46 PCIE_TX8N C117 0.22uF 6.3V COMMON PERN8
PCIE_TX9P AF44 PCIE_TX9P C118 0.22uF 6.3V COMMON PERP9
PCIE_TX9N AF43 PCIE_TX9N C119 0.22uF 6.3V COMMON PERN9
PCIE_TX10P AF47 PCIE_TX10P C120 0.22uF 6.3V COMMON PERP10
PCIE_TX10N AF46 PCIE_TX10N C121 0.22uF 6.3V COMMON PERN10
PCIE_TX11P AE44 PCIE_TX11P C122 0.22uF 6.3V COMMON PERP11
PCIE_TX11N AE43 PCIE_TX11N C123 0.22uF 6.3V COMMON PERN11
PCIE_TX12P AE47 PCIE_TX12P C124 0.22uF 6.3V COMMON PERP12
PCIE_TX12N AE46 PCIE_TX12N C125 0.22uF 6.3V COMMON PERN12
PCIE_TX13P AC44 PCIE_TX13P C126 0.22uF 6.3V COMMON PERP13
PCIE_TX13N AC43 PCIE_TX13N C127 0.22uF 6.3V COMMON PERN13
PCIE_TX14P AC47 PCIE_TX14P C128 0.22uF 6.3V COMMON PERP14
PCIE_TX14N AC46 PCIE_TX14N C129 0.22uF 6.3V COMMON PERN14
PCIE_TX15P AB47 PCIE_TX15P C130 0.22uF 6.3V COMMON PERP15
PCIE_TX15N AB46 PCIE_TX15N C131 0.22uF 6.3V COMMON PERN15
VVVV303v1 C11-2247412-M09
PCIE_CALRP_TX AR44 PCIE_CALRP_TX
R100 1.69K 1% COMMON
VVVV303v1 R11-1691T12-W08
PCIE_CALRN_RX AR43 PCIE_CALRN_RX
R101 1K 1% COMMON
VVVV303v1 R11-0102T12-W08
+0.935V
PX_EN T51 PX_EN
20,21
R150 1K 5% DNI
XXXV303v1 <New PN>
VSS AA48 AB48 AB53 AC45 AC48 AD48 AD53 AE45 AE48 AF45 AF48 AF53 AG48 AH45 AH48 AH53 AJ45 AJ48 AK48 AK53 AL45 AL48 AM45 AM48 AM53 AN45 AN48 AP48 AP53 AR45 AT49 AT53 W50 Y48 Y53
C171 10uF 6.3V DNI XXXV303v1 <New PN>
C172 1uF 6.3V COMMON VVVV303v1 C11-105A312-M09
+1.8V
C136 1uF 6.3V COMMON VVVV303v1 C11-105A312-M09
C137 1uF 6.3V DNI XXXV303v1 <New PN>
C138 1uF 6.3V DNI XXXV303v1 <New PN>
C142 1uF 6.3V DNI XXXV303v1 <New PN>
C143 1uF 6.3V DNI XXXV303v1 <New PN>
C134 0.1uF 6.3V DNI XXXV303v1 <New PN>
C139 0.1uF 6.3V COMMON VVVV303v1 C11-1042312-M09
C140 0.01uF 6.3V COMMON VVVV303v1 C11-1037312-M09
C132 10uF 6.3V DNI XXXV303v1 <New PN>
C141 4.7uF 6.3V DNI XXXV303v1 <New PN>
MC141 10uF 6.3V DNI XXXV303v1 <New PN>
OVERLAP C141 AND MC141
C133 1uF 6.3V COMMON VVVV303v1 C11-105A312-M09
C135 1uF 6.3V COMMON VVVV303v1 C11-105A312-M09
C144 1uF 6.3V COMMON VVVV303v1 C11-105A312-M09
C145 1uF 6.3V COMMON VVVV303v1 C11-105A312-M09
C146 1uF 6.3V COMMON VVVV303v1 C11-105A312-M09
C147 1uF 6.3V COMMON VVVV303v1 C11-105A312-M09
C149 1uF 6.3V COMMON VVVV303v1 C11-105A312-M09
C150 1uF 6.3V COMMON VVVV303v1 C11-105A312-M09
C163 1uF 6.3V COMMON VVVV303v1 C11-105A312-M09
C165 1uF 6.3V COMMON VVVV303v1 C11-105A312-M09
C161 0.1uF 6.3V COMMON VVVV303v1 C11-1042312-M09
C162 0.1uF 6.3V COMMON VVVV303v1 C11-1042312-M09
C164 0.1uF 6.3V COMMON VVVV303v1 C11-1042312-M09
C160 10uF 6.3V COMMON VVVV303v1 C11-1067313-S02
C148 10uF 6.3V COMMON VVVV303v1 C11-1067313-S02

PCIE_CALRP_TX:

PU R100 (1.69K) FOR PITCAIRN

PU R101 (1K) FOR PITCAIRN

GROUND PX_EN (T51) FOR BARTS (NO BACO)

PCIE_VSS MERGED TO VSS IN PITCAIRN

MICRO-STAR INT'L CO.,LTD

MS-V303

Size	Document Description	Rev
Custom	02 CURACAO PCIE INTERFACE	1.0

Date: Thursday, August 01, 2013 | Sheet 2 of 24

(3) CURACAO MEM INTERFACE CH AB

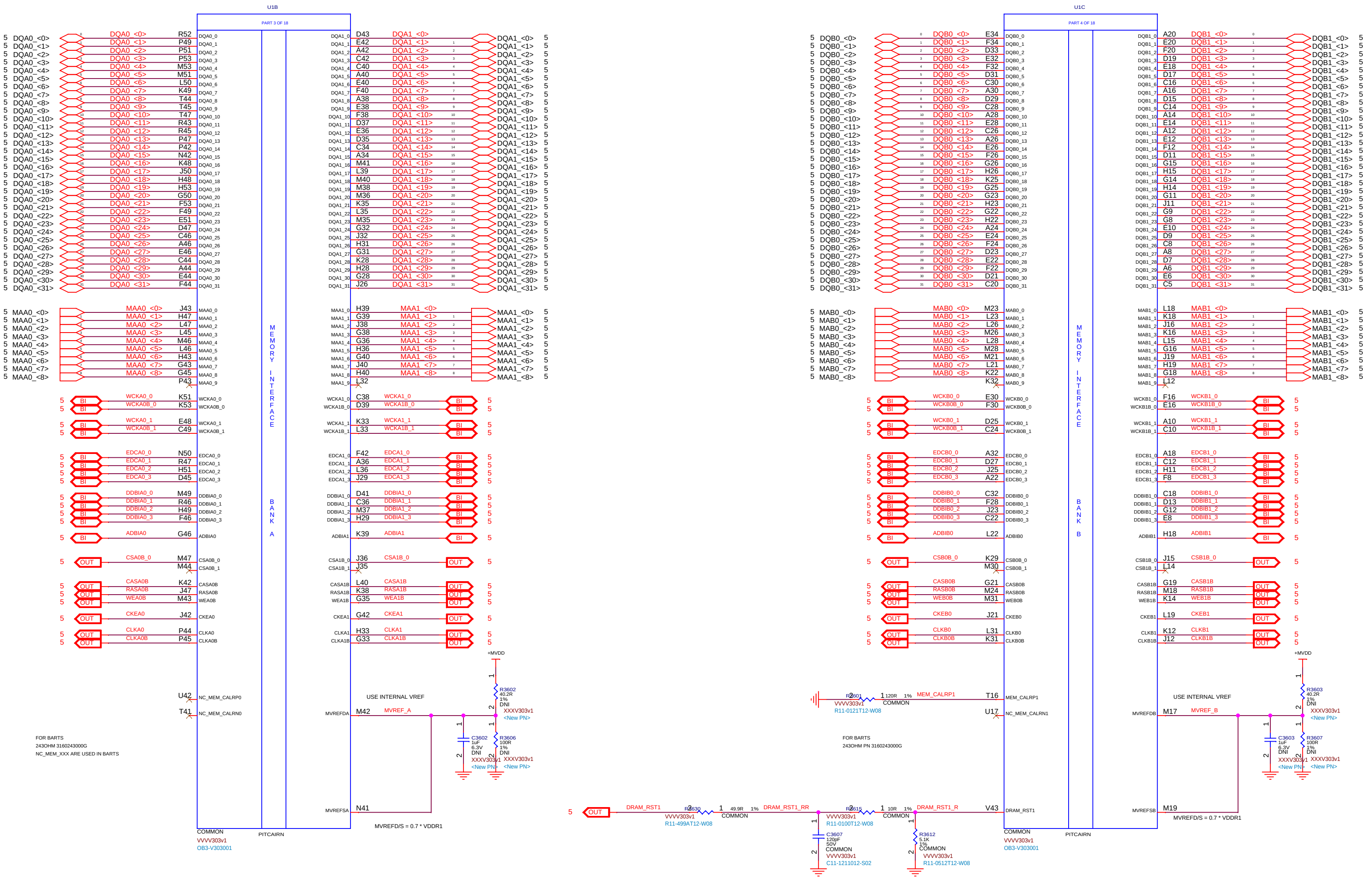
U1B
PART 3 OF 18
MEMORY INTERFACE
BANK A
U1C
PART 4 OF 18
MEMORY INTERFACE
BANK B
DQA0_<0> … DQA0_<31>
DQA1_<0> … DQA1_<31>
MAA0_<0> … MAA0_<8>
MAA1_<0> … MAA1_<8>
DQB0_<0> … DQB0_<31>
DQB1_<0> … DQB1_<31>
MAB0_<0> … MAB0_<8>
MAB1_<0> … MAB1_<8>
WCKA0_0
WCKA0B_0
WCKA0_1
WCKA0B_1
WCKA1_0
WCKA1B_0
WCKA1_1
WCKA1B_1
EDCA0_0
EDCA0_1
EDCA0_2
EDCA0_3
EDCA1_0
EDCA1_1
EDCA1_2
EDCA1_3
DDBIA0_0
DDBIA0_1
DDBIA0_2
DDBIA0_3
DDBIA1_0
DDBIA1_1
DDBIA1_2
DDBIA1_3
ADBIA0
ADBIA1
CSA0B_0
CSA1B_0
CASA0B
RASA0B
WEA0B
CASA1B
RASA1B
WEA1B
CKEA0
CKEA1
CLKA0
CLKA0B
CLKA1
CLKA1B
WCKB0_0
WCKB0B_0
WCKB0_1
WCKB0B_1
WCKB1_0
WCKB1B_0
WCKB1_1
WCKB1B_1
EDCB0_0
EDCB0_1
EDCB0_2
EDCB0_3
EDCB1_0
EDCB1_1
EDCB1_2
EDCB1_3
DDBIB0_0
DDBIB0_1
DDBIB0_2
DDBIB0_3
DDBIB1_0
DDBIB1_1
DDBIB1_2
DDBIB1_3
ADBIB0
ADBIB1
CSB0B_0
CSB1B_0
CASB0B
RASB0B
WEB0B
CASB1B
RASB1B
WEB1B
CKEB0
CKEB1
CLKB0
CLKB0B
CLKB1
CLKB1B
BI
OUT
NC_MEM_CALRP0
NC_MEM_CALRN0
NC_MEM_CALRN1
MEM_CALRP1
MVREFDA
MVREFSA
MVREFDB
MVREFSB
MVREF_A
MVREF_B
DRAM_RST1
DRAM_RST1_RR
DRAM_RST1_R
USE INTERNAL VREF
MVREFD/S = 0.7 * VDDR1
FOR BARTS
243OHM 3160243000G
NC_MEM_XXX ARE USED IN BARTS
FOR BARTS
243OHM PN 3160243000G
+MVDD
R3602 40.2R 1% DNI XXXV303v1 <New PN>
R3606 100R 1% DNI XXXV303v1 <New PN>
C3602 1uF 6.3V DNI XXXV303v1 <New PN>
R3603 40.2R 1% DNI XXXV303v1 <New PN>
R3607 100R 1% DNI XXXV303v1 <New PN>
C3603 1uF 6.3V DNI XXXV303v1 <New PN>
R3601 120R 1% COMMON VVVV303v1 R11-0121T12-W08
R3630 49.9R 1% COMMON VVVV303v1 R11-499AT12-W08
R3615 10R 1% COMMON VVVV303v1 R11-0100T12-W08
C3607 120pF 50V COMMON VVVV303v1 C11-1211012-S02
R3612 5.1K 1% COMMON VVVV303v1 R11-0512T12-W08
COMMON
VVVV303v1
OB3-V303001
PITCAIRN

MICRO-STAR INT'L CO.,LTD

MS-V303

Size Custom

Document Description 03 CURACAO PITCAIRN MEM CH AB

Rev 1.0

Date: Thursday, August 01, 2013

Sheet 3 of 24

(4) CURACAO MEM INTERFACE CH CD

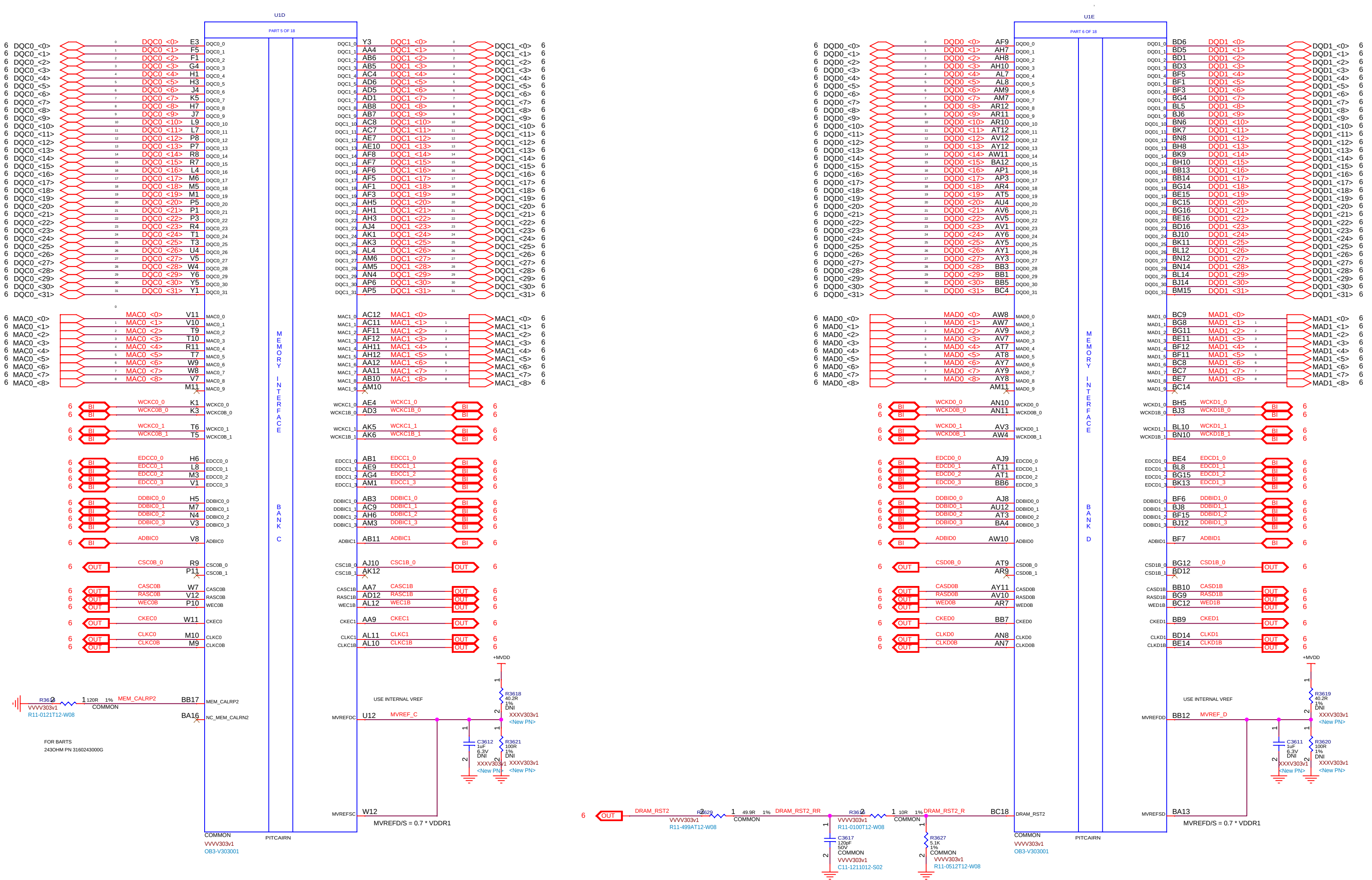

U1D
PART 5 OF 18
MEMORY INTERFACE
BANK C
DQC0_<0> … DQC0_<31>
E3 F5 F1 G4 H1 H3 J4 K5 H7 J7 L9 L7 P8 P7 R8 R7 L4 M6 M5 M1 P5 P1 P3 R4 T1 T3 U4 V5 W4 Y6 Y5 Y1
DQC0_0 … DQC0_31
DQC1_0 … DQC1_31
Y3 AA4 AB6 AB5 AC4 AD6 AD5 AD1 AB8 AB7 AC8 AC7 AE7 AE10 AF8 AF7 AF6 AF5 AF1 AF3 AH5 AH1 AH3 AJ4 AK1 AK3 AL4 AM6 AM5 AN4 AP6 AP5
DQC1_<0> … DQC1_<31>
MAC0_<0> … MAC0_<8>
V11 V10 T9 T10 R11 T7 W9 W8 V7 M11
MAC0_0 … MAC0_9
MAC1_0 … MAC1_9
AC12 AC11 AF11 AF12 AH11 AH12 AA12 AA11 AB10 AM10
MAC1_<0> … MAC1_<8>
WCKC0_0 K1 WCKC0_0
WCKC0B_0 K3 WCKC0B_0
WCKC0_1 T6 WCKC0_1
WCKC0B_1 T5 WCKC0B_1
WCKC1_0 AE4 WCKC1_0
WCKC1B_0 AD3 WCKC1B_0
WCKC1_1 AK5 WCKC1_1
WCKC1B_1 AK6 WCKC1B_1
EDCC0_0 H6, EDCC0_1 L8, EDCC0_2 M3, EDCC0_3 V1
EDCC1_0 AB1, EDCC1_1 AE9, EDCC1_2 AG4, EDCC1_3 AM1
DDBIC0_0 H5, DDBIC0_1 M7, DDBIC0_2 N4, DDBIC0_3 V3
DDBIC1_0 AB3, DDBIC1_1 AC9, DDBIC1_2 AH6, DDBIC1_3 AM3
ADBIC0 V8
ADBIC1 AB11
CSC0B_0 R9, CSC0B_1 P11
CSC1B_0 AJ10, CSC1B_1 AK12
CASC0B W7, RASC0B V12, WEC0B P10
CASC1B AA7, RASC1B AD12, WEC1B AL12
CKEC0 W11
CKEC1 AA9
CLKC0 M10, CLKC0B M9
CLKC1 AL11, CLKC1B AL10
BI
OUT
6
R3614 120R 1% COMMON
VVVV303v1
R11-0121T12-W08
MEM_CALRP2 BB17 MEM_CALRP2
BA16 NC_MEM_CALRN2
FOR BARTS
243OHM PN 3160243000G
USE INTERNAL VREF
MVREFDC U12 MVREF_C
MVREFSC W12
MVREFD/S = 0.7 * VDDR1
+MVDD
R3618 40.2R 1% DNI
XXXV303v1
<New PN>
C3612 1uF 6.3V DNI
R3621 100R 1% DNI
COMMON
VVVV303v1
OB3-V303001
PITCAIRN
U1E
PART 6 OF 18
BANK D
DQD0_<0> … DQD0_<31>
AF9 AH7 AH8 AH10 AL7 AL8 AM9 AM7 AR12 AR11 AR10 AT12 AV12 AY12 AW11 BA12 AP1 AP3 AR4 AT5 AU4 AV6 AV5 AV1 AY6 AY5 AY1 AY3 BB3 BB1 BB5 BC4
DQD0_0 … DQD0_31
DQD1_0 … DQD1_31
BD6 BD5 BD1 BD3 BF5 BF1 BF3 BG4 BL5 BJ6 BN6 BK7 BN8 BH8 BK9 BH10 BB13 BB14 BG14 BE15 BC15 BG16 BE16 BD16 BJ10 BK11 BL12 BN12 BN14 BL14 BJ14 BM15
DQD1_<0> … DQD1_<31>
MAD0_<0> … MAD0_<8>
AW8 AW7 AV9 AV7 AT7 AT8 AY7 AY9 AY8 AM11
MAD0_0 … MAD0_9
MAD1_0 … MAD1_9
BC9 BG8 BG11 BE11 BF12 BF11 BC8 BC7 BE7 BC14
MAD1_<0> … MAD1_<8>
WCKD0_0 AN10, WCKD0B_0 AN11, WCKD0_1 AV3, WCKD0B_1 AW4
WCKD1_0 BH5, WCKD1B_0 BJ3, WCKD1_1 BL10, WCKD1B_1 BN10
EDCD0_0 AJ9, EDCD0_1 AT11, EDCD0_2 AT1, EDCD0_3 BB6
EDCD1_0 BE4, EDCD1_1 BL8, EDCD1_2 BG15, EDCD1_3 BK13
DDBID0_0 AJ8, DDBID0_1 AU12, DDBID0_2 AT3, DDBID0_3 BA4
DDBID1_0 BF6, DDBID1_1 BJ8, DDBID1_2 BF15, DDBID1_3 BJ12
ADBID0 AW10
ADBID1 BF7
CSD0B_0 AT9, CSD0B_1 AR9
CSD1B_0 BG12, CSD1B_1 BD12
CASD0B AY11, RASD0B AV10, WED0B AR7
CASD1B BB10, RASD1B BG9, WED1B BC12
CKED0 BB7
CKED1 BB9
CLKD0 AN8, CLKD0B AN7
CLKD1 BD14, CLKD1B BE14
DRAM_RST2
R3629 49.9R 1% COMMON
R11-499AT12-W08
DRAM_RST2_RR
R3626 10R 1% COMMON
R11-0100T12-W08
DRAM_RST2_R BC18 DRAM_RST2
C3617 120pF 50V COMMON
C11-1211012-S02
R3627 5.1K 1% COMMON
R11-0512T12-W08
MVREFDD BB12 MVREF_D
MVREFSD BA13
R3619 40.2R 1% DNI
C3611 1uF 6.3V DNI
R3620 100R 1% DNI

MICRO-STAR INT'L CO.,LTD

MS-V303

Size	Document Description	Rev
Custom	04 CURACAO PITCAIRN MEM CH CD	1.0

Date: Thursday, August 01, 2013 | Sheet 4 of 24

(5) GDDR5 MEM CH AB

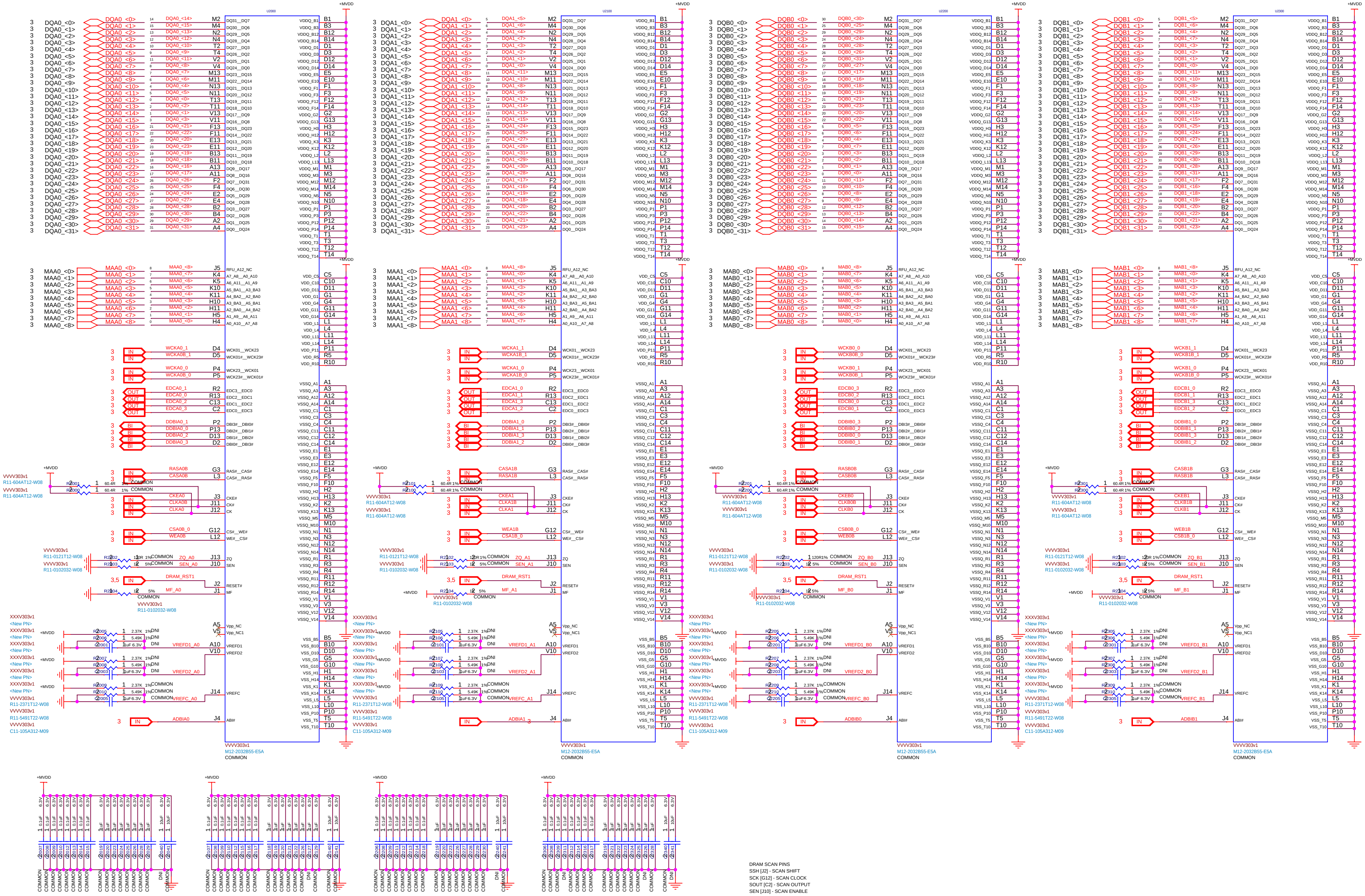
U2000
U2100
U2200
U2300
+MVDD
DQA0_<0>…DQA0_<31>
DQA1_<0>…DQA1_<31>
DQB0_<0>…DQB0_<31>
DQB1_<0>…DQB1_<31>
MAA0_<0>…MAA0_<8>
MAA1_<0>…MAA1_<8>
MAB0_<0>…MAB0_<8>
MAB1_<0>…MAB1_<8>
VVVV303v1
M12-2032B55-E5A
COMMON

DRAM SCAN PINS
SSH [J2] - SCAN SHIFT
SCK [G12] - SCAN CLOCK
SOUT [C2] - SCAN OUTPUT
SEN [J10] - SCAN ENABLE
SOE# [J1] - SCAN OUTPUT ENABLE

MICRO-STAR INT'L CO.,LTD

MS-V303

Size	Document Description	Rev
Custom	05 GDDR5 MEM CH AB	1.0

Date: Thursday, August 01, 2013 Sheet 5 of 24

(6) GDDR5 MEM CH CD

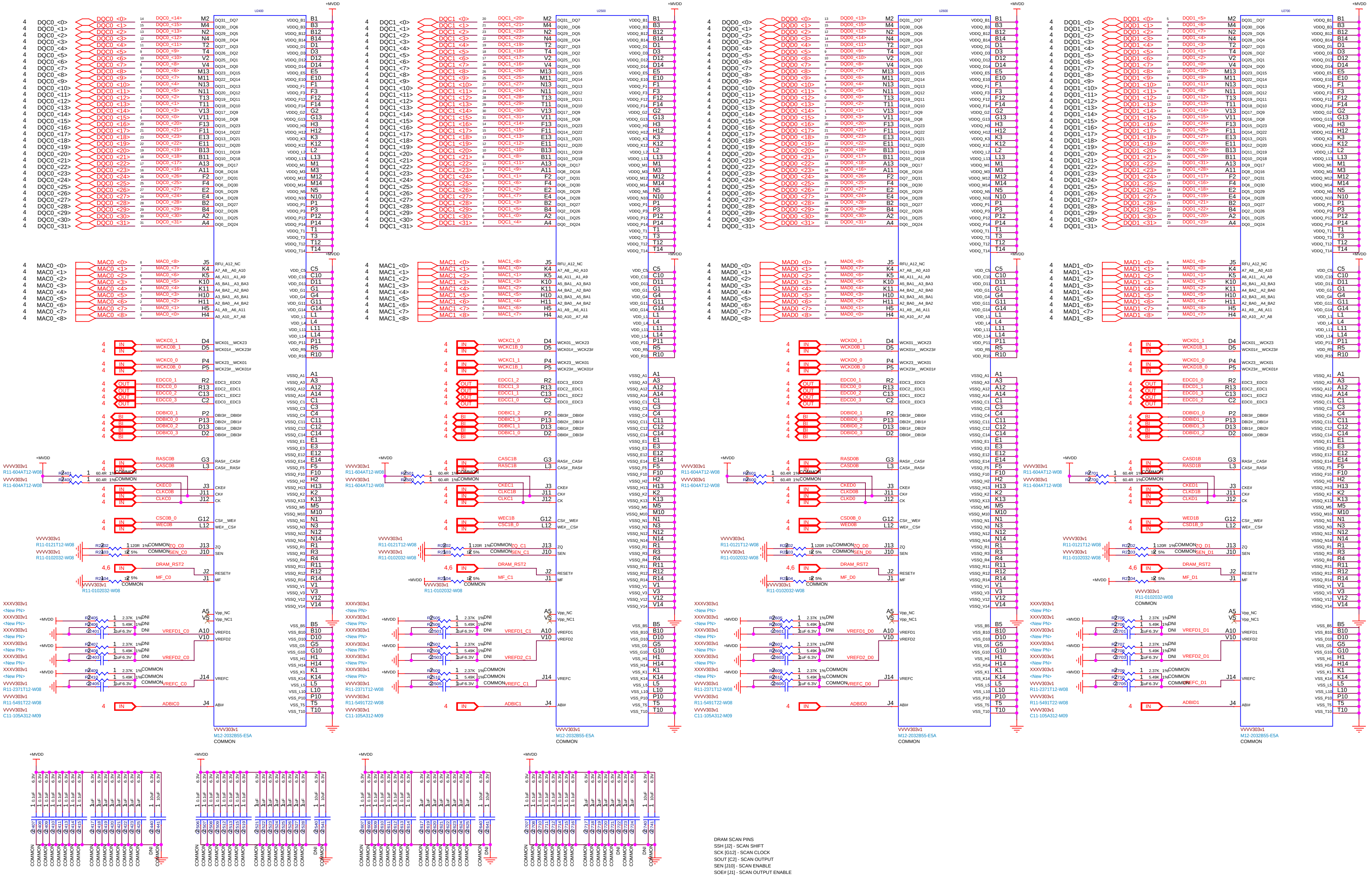
U2400
U2500
U2600
U2700
+MVDD
VVVV303v1
M12-2032B55-E5A
COMMON

DRAM SCAN PINS
SSH [J2] - SCAN SHIFT
SCK [G12] - SCAN CLOCK
SOUT [C2] - SCAN OUTPUT
SEN [J10] - SCAN ENABLE
SOE# [J1] - SCAN OUTPUT ENABLE

MICRO-STAR INT'L CO.,LTD

MS-V303

Size	Document Description	Rev
Custom	06 GDDR5 MEM CH CD	1.0

Date: Thursday, August 01, 2013 Sheet 6 of 24

(7) CURACAO GPIO STRAP CF PLL XTAL

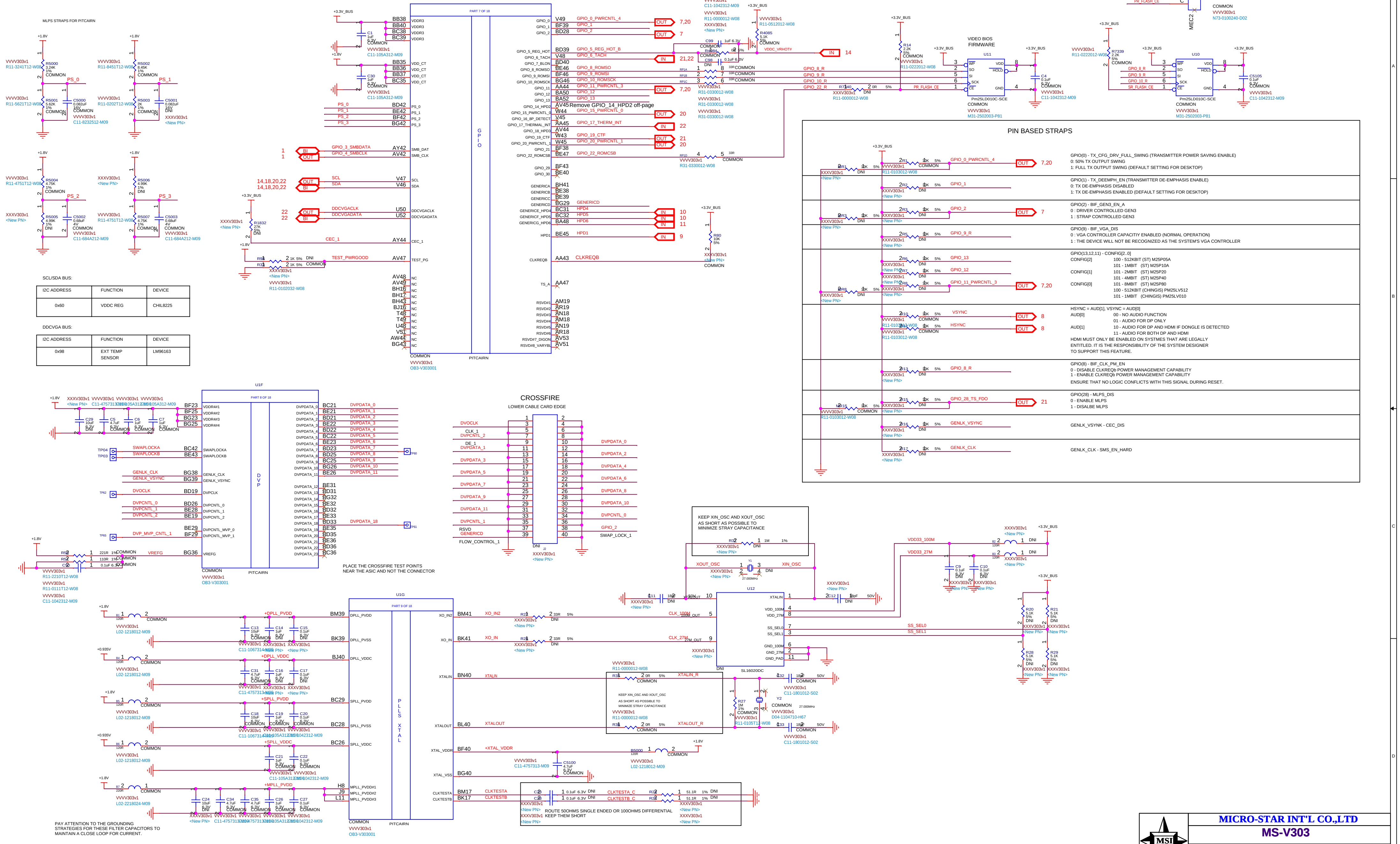
MLPS STRAPS FOR PITCAIRN
+1.8V
R5000 3.24K 1% COMMON
R5001 5.62K 1% COMMON
C5000 0.082uF 16V COMMON
R5002 8.45K 1% COMMON
R5003 2K 1% COMMON
C5001 0.082uF 16V DNI
PS_0
PS_1
PS_2
PS_3
R5004 4.75K 1% COMMON
R5005 4.99K 1% DNI
C5002 0.68uF 4V COMMON
R5006 4.99K 1% DNI
R5007 4.75K 1% COMMON
C5003 0.68uF 4V COMMON
VVVV303v1
XXXV303v1
<New PN>
R11-3241T12-W08
R11-5621T12-W08
R11-8451T12-W08
R11-0202T12-W08
C11-8232512-M09
R11-4751T12-W08
C11-684A212-M09
U1H
PART 7 OF 18
GPIO
PITCAIRN
+3.3V_BUS
C1 1uF 6.3V COMMON
C30 1uF 6.3V COMMON
C11-105A312-M09
BB38 BB40 BC38 BC39 VDDR3
BB35 BB36 BB37 BC35 VDD_CT
BD42 BE42 BF42 BG42 PS_0 PS_1 PS_2 PS_3
GPIO_3_SMBDATA AY42 SMB_DAT
GPIO_4_SMBCLK AV42 SMB_CLK
BI OUT
SCL V47
SDA V46
14,18,20,22
DDCVGACLK U50
DDCVGADATA U52
22
R1832 27K 5% DNI
CEC_1 AY44
R98 1K 5% DNI
R33 1K 5% COMMON
TEST_PWRGOOD AV47 TEST_PG
R11-0102032-W08
AV48 AV49 BH16 BH17 BH43 BJ16 T48 T49 U48 V51 AW44 BG43 NC
OB3-V303001
GPIO_0 V49 GPIO_0_PWRCNTL_4 OUT 7,20
GPIO_1 BF39 GPIO_1
GPIO_2 BD28 GPIO_2 OUT 7
GPIO_5_REG_HOT BD39 GPIO_5_REG_HOT_B
GPIO_6_TACH V48 GPIO_6_TACH IN 21,22
GPIO_7_BLON BD40
GPIO_8_ROMSO BE46 GPIO_8_ROMSO
GPIO_9_ROMSI BF46 GPIO_9_ROMSI
GPIO_10_ROMSCK BG46 GPIO_10_ROMSCK
GPIO_11 AA44 GPIO_11_PWRCNTL_3 OUT 7,20
GPIO_12 BA50 GPIO_12
GPIO_13 BA52 GPIO_13
GPIO_14_HPD2 AV45 Remove GPIO_14_HPD2 off-page
GPIO_15_PWRCNTL_0 W44 GPIO_15_PWRCNTL_0 OUT 20
GPIO_16_8P_DETECT V45
GPIO_17_THERMAL_INT AA45 GPIO_17_THERM_INT IN 22
GPIO_18_HPD3 AV44
GPIO_19_CTF W43 GPIO_19_CTF OUT 21
GPIO_20_PWRCNTL_1 W45 GPIO_20_PWRCNTL_1 OUT 20
GPIO_21 BF38
GPIO_22_ROMCSB BE47 GPIO_22_ROMCSB
GPIO_29 BF43
GPIO_30 BE40
GENERICA BH41
GENERICB BE38
GENERICC BE39
GENERICD BG29 GENERICD
GENERICE_HPD4 BC31 HPD4 IN 10
GENERICF_HPD5 BC32 HPD5 IN 10
GENERICG_HPD6 BA48 HPD6 IN 11
HPD1 BE45 HPD1 IN 9
CLKREQB AA43 CLKREQB
R80 10K 5%
TS_A AA47
RSVD#1 AM19 RSVD#2 AR19 RSVD#3 AN18 RSVD#4 AM18 RSVD#5 AN19 RSVD#6 AR18 RSVD#7_DIGON AV53 RSVD#8_VARYBL AV51
C99 1uF 6.3V COMMON
R4084 0R 5%
C98 0.1uF 6.3V DNI
R4085 5.1K 5% COMMON
VDDC_VRHOT# IN 14
C11-1042312-M09
R11-0000012-W08
R11-0512012-W08
RP1A 33R COMMON
RP1B 33R COMMON
RP1C 33R COMMON
RP1D 33R COMMON
R31-0330012-W08
GPIO_8_R GPIO_9_R GPIO_10_R GPIO_22_R
R7140 0R 5% DNI
PR_FLASH_CE
R14 2.2K 5% COMMON
R11-0222012-W08
VIDEO BIOS FIRMWARE
U11
WP SO SI SCK CE VDD HOLD GND
Pm25LD010C-SCE
M31-2502003-P81
C4 0.1uF 6.3V COMMON
R7339 2.2K 5% COMMON
U10
SR_FLASH_CE
C5105 0.1uF 6.3V COMMON
MEC1 MEC2
SW_BIOS
SW-DIP-P1S-RH
N73-0100240-D02
PIN BASED STRAPS
R1 R2 R3 R5 R6 R7 R8 R10 R11 R13 R15 R16 R17 10K 5%
R11-0103012-W08
GPIO_0_PWRCNTL_4 GPIO_1 GPIO_2 GPIO_9_R GPIO_13 GPIO_12 GPIO_11_PWRCNTL_3 VSYNC HSYNC GPIO_8_R GPIO_28_TS_FDO GENLK_VSYNC GENLK_CLK
U1F
PART 8 OF 18
DVP
VDDR4#1 BF23 VDDR4#2 BF25 VDDR4#3 BG23 VDDR4#4 BG25
C29 10uF 6.3V DNI
C5 4.7uF 6.3V COMMON
C6 1uF 6.3V COMMON
C7 1uF 6.3V COMMON
C11-4757313-M09
TP04 SWAPLOCKA BC42
TP03 SWAPLOCKB BE43
GENLK_CLK BG38
GENLK_VSYNC BG39
TP62 DVOCLK BD19 DVPCLK
DVPCNTL_0 BD26 DVPCNTL_1 BE28 DVPCNTL_2 BE19
TP65 DVP_MVP_CNTL_1 BE29 BF29 DVPCNTL_MVP_0 DVPCNTL_MVP_1
R52 221R 1% COMMON
R53 110R 1% COMMON
C50 0.1uF 6.3V COMMON
VREFG BG36
R11-2210T12-W08
R11-0111T12-W08
DVPDATA_0 BC21 DVPDATA_1 BE21 DVPDATA_2 BD21 DVPDATA_3 BE22 DVPDATA_4 BD22 DVPDATA_5 BC22 DVPDATA_6 BE23 DVPDATA_7 BD23 DVPDATA_8 BD25 DVPDATA_9 BC25 DVPDATA_10 BG26 DVPDATA_11 BE26
DVPDATA_12 BE31 DVPDATA_13 BD31 DVPDATA_14 BG32 DVPDATA_15 BE32 DVPDATA_16 BD32 DVPDATA_17 BE33 DVPDATA_18 BD33 DVPDATA_19 BE35 DVPDATA_20 BD35 DVPDATA_21 BE36 DVPDATA_22 BD36 DVPDATA_23 BC36
TP60 TP61
CROSSFIRE
LOWER CABLE CARD EDGE
J2 DNI
CLK_1 DE_1 RSVD GENERICD FLOW_CONTROL_1 SWAP_LOCK_1
U1G
PART 9 OF 18
PLLS XTAL
B1 120R +DPLL_PVDD BM39 DPLL_PVDD
C13 10uF C14 1uF C15 0.1uF
C11-1067314-M09
BK39 DPLL_PVSS
+0.935V
B4 120R +DPLL_VDDC BJ40 DPLL_VDDC
C31 4.7uF C16 1uF C17 0.1uF
B5 120R +SPLL_PVDD BC29 SPLL_PVDD
C18 10uF C19 1uF C20 0.1uF
BC28 SPLL_PVSS
B6 120R +SPLL_VDDC BC26 SPLL_VDDC
C21 1uF C22 0.1uF
B7 220R +MPLL_PVDD H8 J9 L11 MPLL_PVDD#1 MPLL_PVDD#2 MPLL_PVDD#3
C24 10uF C34 4.7uF C35 4.7uF C26 1uF C27 0.1uF
L02-1218012-M09
L02-2218024-M09
XO_IN2 BM41 R25 33R 5% DNI
XO_IN BK41 R26 33R 5% DNI
XTALIN BN40
XTALOUT BL40
XTAL_VDDR BF40 +XTAL_VDDR
B5000 120R
C5100 4.7uF 6.3V COMMON
XTAL_VSS BG40
CLKTESTA BM17 CLKTESTB BK17
C23 C28 0.1uF 6.3V DNI
CLKTESTA_C CLKTESTB_C
R23 R24 51.1R 1% DNI
U12
SL16020DC
XTALIN XTALOUT VDD_100M VDD_27M SS_SEL0 SS_SEL1 GND_100M GND_27M GND_PAD
100M_OUT 27M_OUT
CLK_100M CLK_27M
R32 1M 1% DNI
Y1 27.000MHz DNI
XOUT_OSC XIN_OSC
C11 18pF 50V DNI
C12 18pF 50V DNI
R31 0R 5% COMMON
R35 0R 5% COMMON
XTALIN_R XTALOUT_R
R27 1M 1% COMMON
R11-0105T12-W08
Y2 27.000MHz COMMON
D04-1104710-H67
C32 18pF 50V COMMON
C33 18pF 50V COMMON
C11-1801012-S02
VDD33_100M VDD33_27M
C9 0.1uF 6.3V DNI
C10 0.1uF 6.3V DNI
B2 120R DNI
B3 120R DNI
R20 5.1K 5% DNI
R21 5.1K 5% DNI
R28 5.1K 5% DNI
R29 5.1K 5% DNI
SS_SEL0 SS_SEL1

SCL/SDA BUS:

I2C ADDRESS	FUNCTION	DEVICE
0x60	VDDC REG	CHIL8225

DDCVGA BUS:

I2C ADDRESS	FUNCTION	DEVICE
0x98	EXT TEMP SENSOR	LM96163

GPIO(0) - TX_CFG_DRV_FULL_SWING (TRANSMITTER POWER SAVING ENABLE)
0: 50% TX OUTPUT SWING
1: FULL TX OUTPUT SWING (DEFAULT SETTING FOR DESKTOP)

GPIO(1) - TX_DEEMPH_EN (TRANSMITTER DE-EMPHASIS ENABLE)
0: TX DE-EMPHASIS DISABLED
1: TX DE-EMPHASIS ENABLED (DEFAULT SETTING FOR DESKTOP)

GPIO(2) - BIF_GEN3_EN_A
0 : DRIVER CONTROLLED GEN3
1 : STRAP CONTROLLED GEN3

GPIO(9) - BIF_VGA_DIS
0 : VGA CONTROLLER CAPACITIY ENABLED (NORMAL OPERATION)
1 : THE DEVICE WILL NOT BE RECOGNIZED AS THE SYSTEM'S VGA CONTROLLER

GPIO(13,12,11) - CONFIG[2..0]

CONFIG[2]	100 - 512KBIT (ST) M25P05A	
	101 - 1MBIT	(ST) M25P10A
CONFIG[1]	101 - 2MBIT	(ST) M25P20
	101 - 4MBIT	(ST) M25P40
CONFIG[0]	101 - 8MBIT	(ST) M25P80
	100 - 512KBIT (CHINGIS) PM25LV512	
	101 - 1MBIT	(CHINGIS) PM25LV010

HSYNC = AUD[1], VSYNC = AUD[0]

AUD[0]	00 - NO AUDIO FUNCTION
	01 - AUDIO FOR DP ONLY
AUD[1]	10 - AUDIO FOR DP AND HDMI IF DONGLE IS DETECTED
	11 - AUDIO FOR BOTH DP AND HDMI

HDMI MUST ONLY BE ENABLED ON SYSTMES THAT ARE LEGALLY ENTITLED. IT IS THE RESPONSIBILITY OF THE SYSTEM DESIGNER TO SUPPORT THIS FEATURE.

GPIO(8) - BIF_CLK_PM_EN
0 - DISABLE CLKREQb POWER MANAGEMENT CAPABILITY
1 - ENABLE CLKREQb POWER MANAGEMENT CAPABILITY
ENSURE THAT NO LOGIC CONFLICTS WITH THIS SIGNAL DURING RESET.

GPIO(28) - MLPS_DIS
0 - ENABLE MLPS
1 - DISALBE MLPS

GENLK_VSYNK - CEC_DIS

GENLK_CLK - SMS_EN_HARD

PLACE THE CROSSFIRE TEST POINTS NEAR THE ASIC AND NOT THE CONNECTOR

KEEP XIN_OSC AND XOUT_OSC AS SHORT AS POSSIBLE TO MINIMIZE STRAY CAPACITANCE

KEEP XIN_OSC AND XOUT_OSC AS SHORT AS POSSIBLE TO MINIMIZE STRAY CAPACITANCE

ROUTE 50OHMS SINGLE ENDED OR 100OHMS DIFFERENTIAL KEEP THEM SHORT

PAY ATTENTION TO THE GROUNDING STRATEGIES FOR THESE FILTER CAPACITORS TO MAINTAIN A CLOSE LOOP FOR CURRENT.

MICRO-STAR INT'L CO.,LTD

MS-V303

Size	Document Description	Rev
Custom	07CURACAO PITCAIRN GPIO STRAP	1.0

Date: Thursday, August 01, 2013 | Sheet 7 of 24

(8) CURACAO DAC

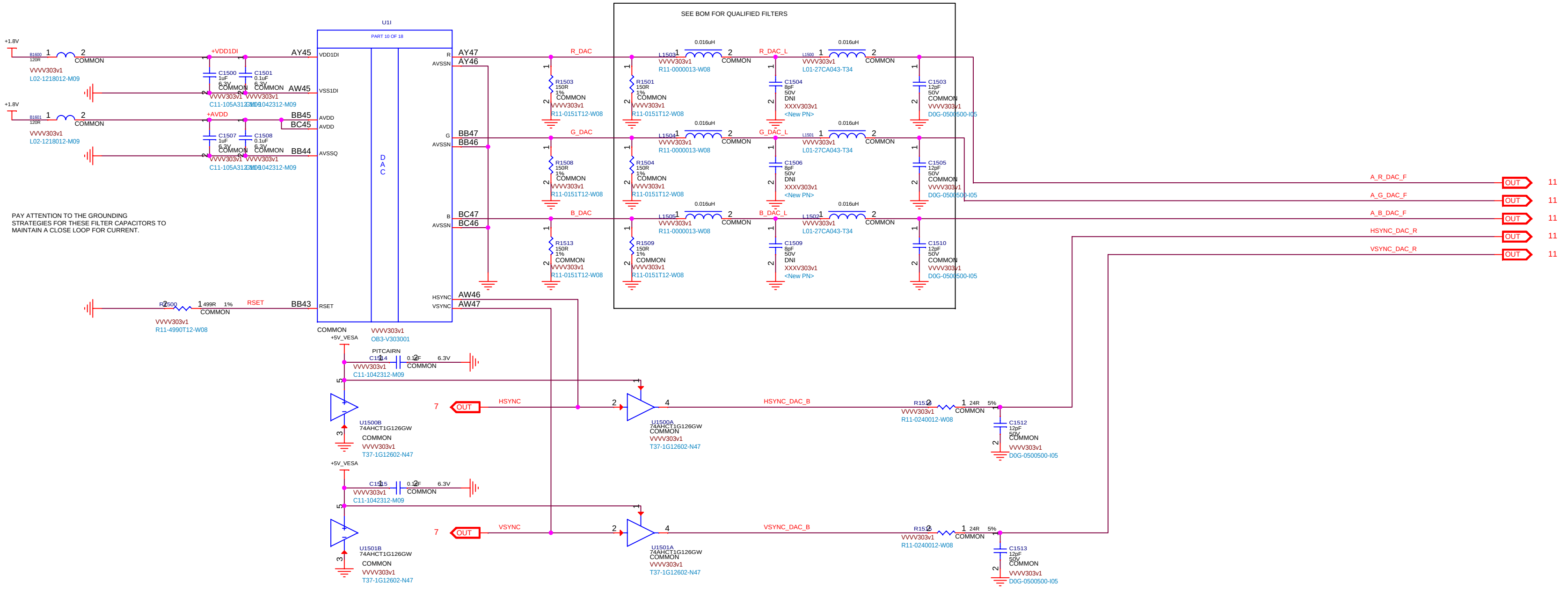
SEE BOM FOR QUALIFIED FILTERS
U1I
PART 10 OF 18
DAC
VDD1DI
VSS1DI
AVDD
AVSSQ
RSET
AVSSN
HSYNC
VSYNC
AY45
AW45
BB45
BC45
BB44
BB43
AY47
AY46
BB47
BB46
BC47
BC46
AW46
AW47
+1.8V
+VDD1DI
+AVDD
L1600
L1601
120R
COMMON
VVVV303v1
L02-1218012-M09
C1500
1uF
6.3V
C1501
0.1uF
C1507
C1508
C11-105A312-M09
C11-1042312-M09
R1500
499R
1%
R11-4990T12-W08
COMMON
VVVV303v1
OB3-V303001
R_DAC
G_DAC
B_DAC
R1503
R1508
R1513
150R
1%
R11-0151T12-W08
R1501
R1504
R1509
L1503
L1504
L1505
0.016uH
R11-0000013-W08
R_DAC_L
G_DAC_L
B_DAC_L
C1504
C1506
C1509
8pF
50V
DNI
XXXV303v1
<New PN>
L1500
L1501
L1502
L01-27CA043-T34
C1503
C1505
C1510
12pF
D0G-0500500-I05
A_R_DAC_F
A_G_DAC_F
A_B_DAC_F
HSYNC_DAC_R
VSYNC_DAC_R
OUT
11
+5V_VESA
PITCAIRN
C1514
C1515
0.1uF
6.3V
C11-1042312-M09
U1500B
U1501B
74AHCT1G126GW
T37-1G12602-N47
U1500A
U1501A
HSYNC
VSYNC
7
HSYNC_DAC_B
VSYNC_DAC_B
R1520
R1521
24R
5%
R11-0240012-W08
C1512
C1513
12pF
50V
D0G-0500500-I05

PAY ATTENTION TO THE GROUNDING
STRATEGIES FOR THESE FILTER CAPACITORS TO
MAINTAIN A CLOSE LOOP FOR CURRENT.

OPTIONAL ESD PROTECTION DIODES

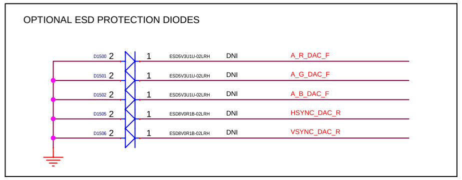
D1500
D1501
D1502
D1505
D1506
2
1
ESD5V3U1U-02LRH
ESD8V0R1B-02LRH
DNI
A_R_DAC_F
A_G_DAC_F
A_B_DAC_F
HSYNC_DAC_R
VSYNC_DAC_R

MICRO-STAR INT'L CO.,LTD

MS-V303

Size	Document Description	Rev
Custom	08 CURACAO PITCAIRN DAC	1.0

Date: Thursday, August 01, 2013 Sheet 8 of 24

(9) CURACAO TMDPAB sDVI

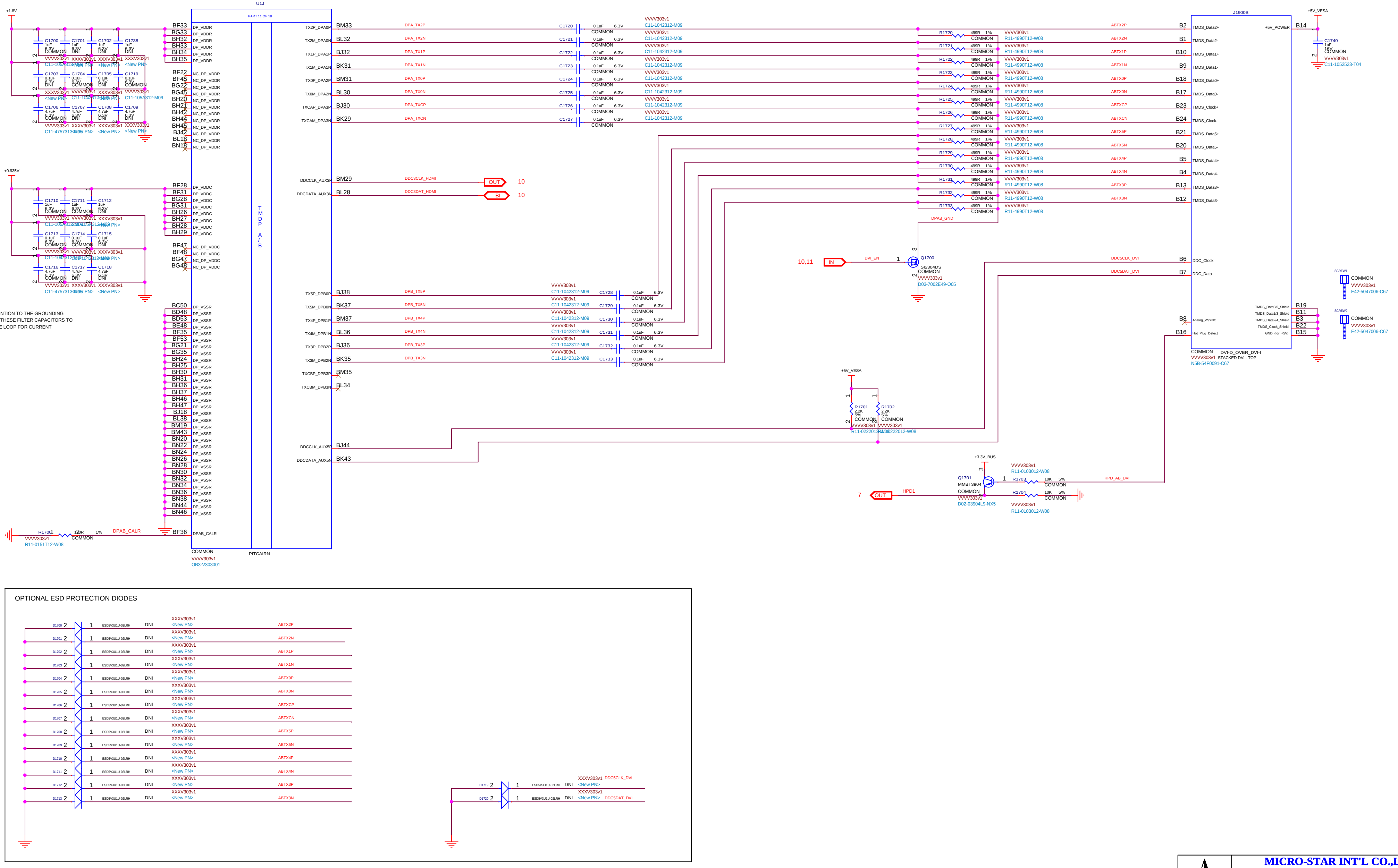

U1J
PART 11 OF 18
TMDP A/B
PITCAIRN
COMMON
VVVV303v1
OB3-V303001
+1.8V
BF33 BG33 BH32 BH33 BH34 BH35 DP_VDDR
BF22 BF45 BG22 BG45 BH20 BH21 BH42 BH44 BH45 BJ42 BL18 BN18 NC_DP_VDDR
C1700 1uF 6.3V COMMON VVVV303v1 C11-105A312-M09
C1701 1uF 6.3V DNI XXXV303v1 <New PN>
C1702 1uF 6.3V DNI XXXV303v1 <New PN>
C1738 1uF 6.3V DNI XXXV303v1 <New PN>
C1703 0.1uF 6.3V DNI XXXV303v1 <New PN>
C1704 0.1uF 6.3V COMMON VVVV303v1 C11-1042312-M09
C1705 0.1uF 6.3V DNI XXXV303v1 <New PN>
C1719 0.1uF 6.3V COMMON VVVV303v1 C11-105A312-M09
C1706 4.7uF 6.3V COMMON VVVV303v1 C11-4757313-M09
C1707 4.7uF 6.3V DNI XXXV303v1 <New PN>
C1708 4.7uF 6.3V DNI XXXV303v1 <New PN>
C1709 4.7uF 6.3V DNI XXXV303v1 <New PN>
+0.935V
BF28 BF31 BG28 BG31 BH26 BH27 BH28 BH29 DP_VDDC
BF47 BF48 BG47 BG48 NC_DP_VDDC
C1710 1uF 6.3V COMMON VVVV303v1 C11-105A312-M09
C1711 1uF 6.3V COMMON VVVV303v1 C11-105A312-M09
C1712 1uF 6.3V DNI XXXV303v1 <New PN>
C1713 0.1uF 6.3V COMMON VVVV303v1 C11-1042312-M09
C1714 0.1uF 6.3V COMMON VVVV303v1 C11-1042312-M09
C1715 0.1uF 6.3V DNI XXXV303v1 <New PN>
C1716 4.7uF 6.3V COMMON VVVV303v1 C11-4757313-M09
C1717 4.7uF 6.3V DNI XXXV303v1 <New PN>
C1718 4.7uF 6.3V DNI XXXV303v1 <New PN>
PLEASE PAY ATTENTION TO THE GROUNDING
STRATEGIES FOR THESE FILTER CAPACITORS TO
MAINTAIN A CLOSE LOOP FOR CURRENT
BC50 BD48 BD53 BE48 BF35 BF53 BG21 BG35 BH24 BH25 BH30 BH31 BH36 BH37 BH46 BH47 BJ18 BL38 BM19 BM43 BN20 BN22 BN24 BN26 BN28 BN30 BN32 BN34 BN36 BN38 BN44 BN46 DP_VSSR
R1700 1 2 150R 1% COMMON VVVV303v1 R11-0151T12-W08
DPAB_CALR BF36 DPAB_CALR
TX2P_DPA0P BM33 DPA_TX2P
TX2M_DPA0N BL32 DPA_TX2N
TX1P_DPA1P BJ32 DPA_TX1P
TX1M_DPA1N BK31 DPA_TX1N
TX0P_DPA2P BM31 DPA_TX0P
TX0M_DPA2N BL30 DPA_TX0N
TXCAP_DPA3P BJ30 DPA_TXCP
TXCAM_DPA3N BK29 DPA_TXCN
DDCCLK_AUX3P BM29 DDC3CLK_HDMI OUT 10
DDCDATA_AUX3N BL28 DDC3DAT_HDMI BI 10
TX5P_DPB0P BJ38 DPB_TX5P
TX5M_DPB0N BK37 DPB_TX5N
TX4P_DPB1P BM37 DPB_TX4P
TX4M_DPB1N BL36 DPB_TX4N
TX3P_DPB2P BJ36 DPB_TX3P
TX3M_DPB2N BK35 DPB_TX3N
TXCBP_DPB3P BM35
TXCBM_DPB3N BL34
DDCCLK_AUX5P BJ44
DDCDATA_AUX5N BK43
C1720 C1721 C1722 C1723 C1724 C1725 C1726 C1727 0.1uF 6.3V COMMON VVVV303v1 C11-1042312-M09
C1728 C1729 C1730 C1731 C1732 C1733 0.1uF 6.3V COMMON VVVV303v1 C11-1042312-M09
R1720 R1721 R1722 R1723 R1724 R1725 R1726 R1727 R1728 R1729 R1730 R1731 R1732 R1733 499R 1% COMMON VVVV303v1 R11-4990T12-W08
DPAB_GND
10,11 IN DVI_EN
Q1700 SI2304DS COMMON VVVV303v1 D03-7002E49-O05
+5V_VESA
R1701 2.2K 5% COMMON VVVV303v1 R11-0222012-W08
R1702 2.2K 5% COMMON VVVV303v1 R11-0222012-W08
+3.3V_BUS
Q1701 MMBT3904 COMMON VVVV303v1 D02-03904L9-NX5
R1703 10K 5% COMMON VVVV303v1 R11-0103012-W08
R1704 10K 5% COMMON VVVV303v1 R11-0103012-W08
7 OUT HPD1
HPD_AB_DVI
J1900B
ABTX2P B2 TMDS_Data2+
ABTX2N B1 TMDS_Data2-
ABTX1P B10 TMDS_Data1+
ABTX1N B9 TMDS_Data1-
ABTX0P B18 TMDS_Data0+
ABTX0N B17 TMDS_Data0-
ABTXCP B23 TMDS_Clock+
ABTXCN B24 TMDS_Clock-
ABTX5P B21 TMDS_Data5+
ABTX5N B20 TMDS_Data5-
ABTX4P B5 TMDS_Data4+
ABTX4N B4 TMDS_Data4-
ABTX3P B13 TMDS_Data3+
ABTX3N B12 TMDS_Data3-
DDC5CLK_DVI B6 DDC_Clock
DDC5DAT_DVI B7 DDC_Data
B8 Analog_VSYNC
B16 Hot_Plug_Detect
+5V_POWER B14
TMDS_Data0/5_Shield B19
TMDS_Data1/3_Shield B11
TMDS_Data2/4_Shield B3
TMDS_Clock_Shield B22
GND_(for_+5V) B15
COMMON DVI-D_OVER_DVI-I
VVVV303v1 STACKED DVI - TOP
N5B-54F0091-C67
+5V_VESA
C1740 1uF 16V COMMON VVVV303v1 C11-1052523-T04
SCREW1 COMMON VVVV303v1 E42-5047006-C67
SCREW2 COMMON VVVV303v1 E42-5047006-C67
OPTIONAL ESD PROTECTION DIODES
D1700 2 1 ESD5V3U1U-02LRH DNI XXXV303v1 <New PN> ABTX2P
D1701 2 1 ESD5V3U1U-02LRH DNI XXXV303v1 <New PN> ABTX2N
D1702 2 1 ESD5V3U1U-02LRH DNI XXXV303v1 <New PN> ABTX1P
D1703 2 1 ESD5V3U1U-02LRH DNI XXXV303v1 <New PN> ABTX1N
D1704 2 1 ESD5V3U1U-02LRH DNI XXXV303v1 <New PN> ABTX0P
D1705 2 1 ESD5V3U1U-02LRH DNI XXXV303v1 <New PN> ABTX0N
D1706 2 1 ESD5V3U1U-02LRH DNI XXXV303v1 <New PN> ABTXCP
D1707 2 1 ESD5V3U1U-02LRH DNI XXXV303v1 <New PN> ABTXCN
D1708 2 1 ESD5V3U1U-02LRH DNI XXXV303v1 <New PN> ABTX5P
D1709 2 1 ESD5V3U1U-02LRH DNI XXXV303v1 <New PN> ABTX5N
D1710 2 1 ESD5V3U1U-02LRH DNI XXXV303v1 <New PN> ABTX4P
D1711 2 1 ESD5V3U1U-02LRH DNI XXXV303v1 <New PN> ABTX4N
D1712 2 1 ESD5V3U1U-02LRH DNI XXXV303v1 <New PN> ABTX3P
D1713 2 1 ESD5V3U1U-02LRH DNI XXXV303v1 <New PN> ABTX3N
D1719 2 1 ESD5V3U1U-02LRH DNI XXXV303v1 <New PN> DDC5CLK_DVI
D1720 2 1 ESD5V3U1U-02LRH DNI XXXV303v1 <New PN> DDC5DAT_DVI

MICRO-STAR INT'L CO.,LTD

MS-V303

Size	Document Description	Rev
Custom	09 CURACAO PITCAIRN TMDPAB dDVI	1.0

Date: Thursday, August 01, 2013 Sheet 9 of 24

(1) PCI-EXPRESS EDGE CONNECTOR

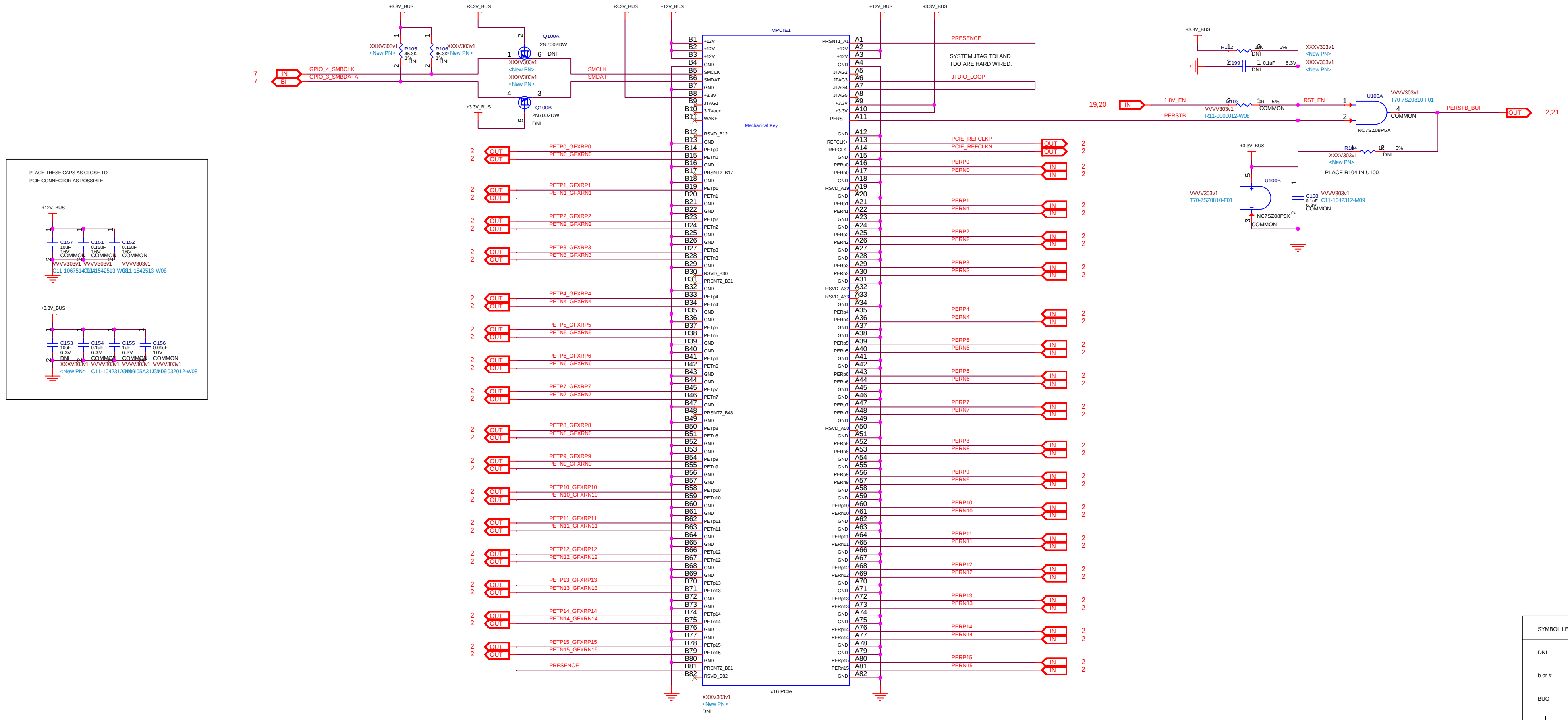
+3.3V_BUS
+3.3V_BUS
+3.3V_BUS
+12V_BUS
+12V_BUS
+3.3V_BUS
R105
45.3K
1%
DNI
XXXV303v1
<New PN>
R106
45.3K
1%
DNI
XXXV303v1
<New PN>
7
7
IN
BI
GPIO_4_SMBCLK
GPIO_3_SMBDATA
Q100A
2N7002DW
DNI
XXXV303v1
<New PN>
XXXV303v1
<New PN>
Q100B
2N7002DW
DNI
SMCLK
SMDAT
MPCIE1
Mechanical Key
x16 PCIe
XXXV303v1
<New PN>
DNI
B1 +12V
B2 +12V
B3 +12V
B4 GND
B5 SMCLK
B6 SMDAT
B7 GND
B8 +3.3V
B9 JTAG1
B10 3.3Vaux
B11 WAKE_
B12 RSVD_B12
B13 GND
B14 PETp0
B15 PETn0
B16 GND
B17 PRSNT2_B17
B18 GND
B19 PETp1
B20 PETn1
B21 GND
B22 GND
B23 PETp2
B24 PETn2
B25 GND
B26 GND
B27 PETp3
B28 PETn3
B29 GND
B30 RSVD_B30
B31 PRSNT2_B31
B32 GND
B33 PETp4
B34 PETn4
B35 GND
B36 GND
B37 PETp5
B38 PETn5
B39 GND
B40 GND
B41 PETp6
B42 PETn6
B43 GND
B44 GND
B45 PETp7
B46 PETn7
B47 GND
B48 PRSNT2_B48
B49 GND
B50 PETp8
B51 PETn8
B52 GND
B53 GND
B54 PETp9
B55 PETn9
B56 GND
B57 GND
B58 PETp10
B59 PETn10
B60 GND
B61 GND
B62 PETp11
B63 PETn11
B64 GND
B65 GND
B66 PETp12
B67 PETn12
B68 GND
B69 GND
B70 PETp13
B71 PETn13
B72 GND
B73 GND
B74 PETp14
B75 PETn14
B76 GND
B77 GND
B78 PETp15
B79 PETn15
B80 GND
B81 PRSNT2_B81
B82 RSVD_B82
PRSNT1_A1 A1
+12V A2
+12V A3
GND A4
JTAG2 A5
JTAG3 A6
JTAG4 A7
JTAG5 A8
+3.3V A9
+3.3V A10
PERST_ A11
GND A12
REFCLK+ A13
REFCLK- A14
GND A15
PERp0 A16
PERn0 A17
GND A18
RSVD_A19 A19
GND A20
PERp1 A21
PERn1 A22
GND A23
GND A24
PERp2 A25
PERn2 A26
GND A27
GND A28
PERp3 A29
PERn3 A30
GND A31
RSVD_A32 A32
RSVD_A33 A33
GND A34
PERp4 A35
PERn4 A36
GND A37
GND A38
PERp5 A39
PERn5 A40
GND A41
GND A42
PERp6 A43
PERn6 A44
GND A45
GND A46
PERp7 A47
PERn7 A48
GND A49
RSVD_A50 A50
GND A51
PERp8 A52
PERn8 A53
GND A54
GND A55
PERp9 A56
PERn9 A57
GND A58
GND A59
PERp10 A60
PERn10 A61
GND A62
GND A63
PERp11 A64
PERn11 A65
GND A66
GND A67
PERp12 A68
PERn12 A69
GND A70
GND A71
PERp13 A72
PERn13 A73
GND A74
GND A75
PERp14 A76
PERn14 A77
GND A78
GND A79
PERp15 A80
PERn15 A81
GND A82
PETP0_GFXRP0
PETN0_GFXRN0
PETP1_GFXRP1
PETN1_GFXRN1
PETP2_GFXRP2
PETN2_GFXRN2
PETP3_GFXRP3
PETN3_GFXRN3
PETP4_GFXRP4
PETN4_GFXRN4
PETP5_GFXRP5
PETN5_GFXRN5
PETP6_GFXRP6
PETN6_GFXRN6
PETP7_GFXRP7
PETN7_GFXRN7
PETP8_GFXRP8
PETN8_GFXRN8
PETP9_GFXRP9
PETN9_GFXRN9
PETP10_GFXRP10
PETN10_GFXRN10
PETP11_GFXRP11
PETN11_GFXRN11
PETP12_GFXRP12
PETN12_GFXRN12
PETP13_GFXRP13
PETN13_GFXRN13
PETP14_GFXRP14
PETN14_GFXRN14
PETP15_GFXRP15
PETN15_GFXRN15
PRESENCE
OUT
2
PRESENCE
SYSTEM JTAG TDI AND
TDO ARE HARD WIRED.
JTDIO_LOOP
PCIE_REFCLKP
PCIE_REFCLKN
PERP0
PERN0
PERP1
PERN1
PERP2
PERN2
PERP3
PERN3
PERP4
PERN4
PERP5
PERN5
PERP6
PERN6
PERP7
PERN7
PERP8
PERN8
PERP9
PERN9
PERP10
PERN10
PERP11
PERN11
PERP12
PERN12
PERP13
PERN13
PERP14
PERN14
PERP15
PERN15
IN
2
+3.3V_BUS
R102
1K
5%
DNI
XXXV303v1
<New PN>
C199
0.1uF
6.3V
DNI
XXXV303v1
<New PN>
19,20
IN
1.8V_EN
R103
0R
5%
COMMON
VVVV303v1
R11-0000012-W08
PERSTB
RST_EN
U100A
VVVV303v1
T70-7SZ0810-F01
NC7SZ08P5X
COMMON
PERSTB_BUF
OUT
2,21
R104
1K
5%
DNI
XXXV303v1
<New PN>
PLACE R104 IN U100
+3.3V_BUS
U100B
NC7SZ08P5X
COMMON
VVVV303v1
T70-7SZ0810-F01
C158
0.1uF
6.3V
COMMON
VVVV303v1
C11-1042312-M09
PLACE THESE CAPS AS CLOSE TO
PCIE CONNECTOR AS POSSIBLE
+12V_BUS
C157
10uF
16V
COMMON
VVVV303v1
C11-1067514
C151
0.15uF
16V
COMMON
VVVV303v1
C11-1542513-W08
C152
0.15uF
16V
COMMON
VVVV303v1
C11-1542513-W08
+3.3V_BUS
C153
10uF
6.3V
DNI
XXXV303v1
<New PN>
C154
0.1uF
6.3V
COMMON
VVVV303v1
C11-1042312-M09
C155
1uF
6.3V
COMMON
VVVV303v1
C11-105A312-M09
C156
0.01uF
10V
COMMON
VVVV303v1
C11-1032012-W08

SYMBOL LEGEND

DNI	DO NOT INSTALL
b or #	ACTIVE LOW
BUO	BRING UP ONLY
⏚	DIGITAL GROUND
▽	ANALOG GROUND

MICRO-STAR INT'L CO.,LTD
MS-V303
Size: Custom
Document Description: 01 PCIE EDGE CONNECTOR
Rev: 1.0
Date: Thursday, August 01, 2013
Sheet 1 of 24

(10) CURACAO TMDPCD DP HDMI

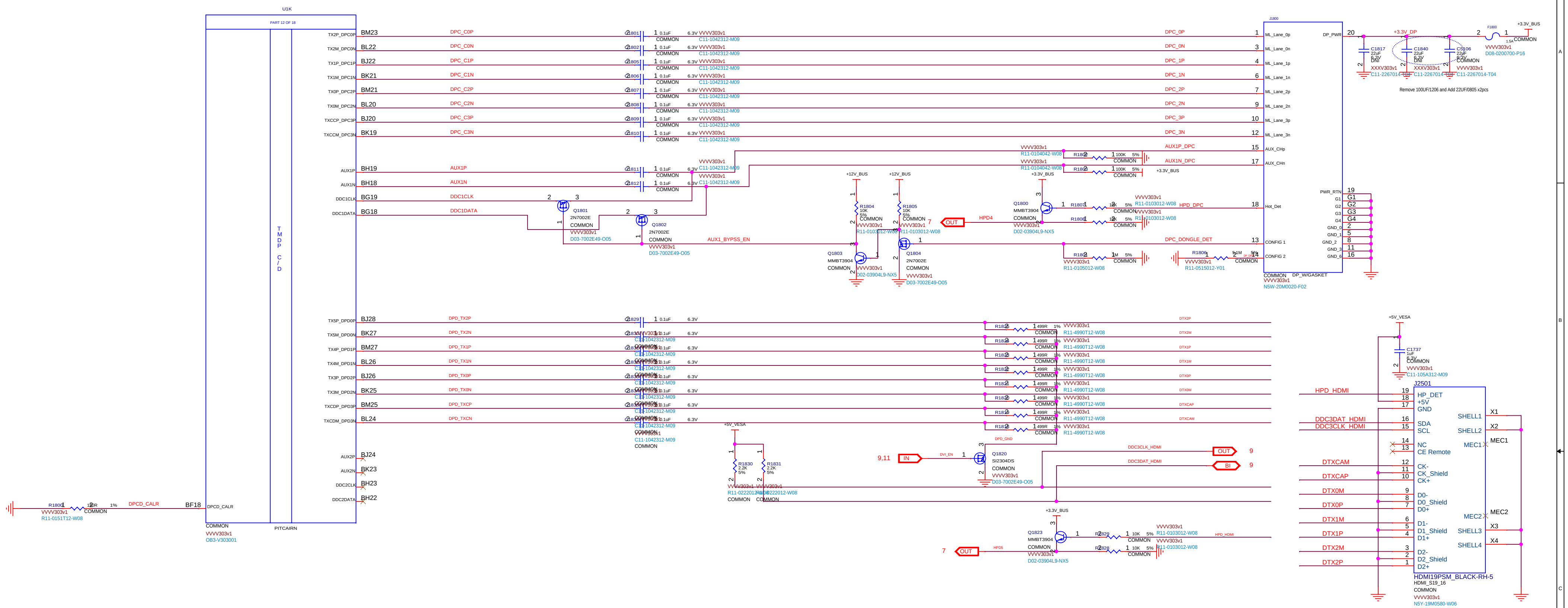
U1K
PART 12 OF 18
TMDP C/D
PITCAIRN
TX2P_DPC0P BM23 DPC_C0P
TX2M_DPC0N BL22 DPC_C0N
TX1P_DPC1P BJ22 DPC_C1P
TX1M_DPC1N BK21 DPC_C1N
TX0P_DPC2P BM21 DPC_C2P
TX0M_DPC2N BL20 DPC_C2N
TXCCP_DPC3P BJ20 DPC_C3P
TXCCM_DPC3N BK19 DPC_C3N
AUX1P BH19 AUX1P
AUX1N BH18 AUX1N
DDC1CLK BG19 DDC1CLK
DDC1DATA BG18 DDC1DATA
TXSP_DPD0P BJ28 DPD_TX2P
TXSM_DPD0N BK27 DPD_TX2N
TX4P_DPD1P BM27 DPD_TX1P
TX4M_DPD1N BL26 DPD_TX1N
TX3P_DPD2P BJ26 DPD_TX0P
TX3M_DPD2N BK25 DPD_TX0N
TXCDP_DPD3P BM25 DPD_TXCP
TXCDM_DPD3N BL24 DPD_TXCN
AUX2P BJ24
AUX2N BK23
DDC2CLK BH23
DDC2DATA BH22
DPCD_CALR BF18 DPCD_CALR
R1800 150R 1% VVVV303v1 R11-0151T12-W08 COMMON
OB3-V303001
C1801–C1812 0.1uF 6.3V VVVV303v1 C11-1042312-M09 COMMON
C1829–C1836 0.1uF 6.3V C11-1042312-M09
Q1801 2N7002E COMMON VVVV303v1 D03-7002E49-O05
Q1802 2N7002E COMMON VVVV303v1 D03-7002E49-O05
AUX1_BYPASS_EN
Q1803 MMBT3904 COMMON VVVV303v1 D02-03904L9-NX5
Q1804 2N7002E COMMON VVVV303v1 D03-7002E49-O05
R1804 10K 5% R11-0103012-W08
R1805 10K 5% R11-0103012-W08
+12V_BUS
OUT 7 HPD4
Q1800 MMBT3904 COMMON VVVV303v1 D02-03904L9-NX5
R1801 1K 5% R11-0103012-W08 HPD_DPC
R1802 100K 5% R11-0104042-W08 AUX1P_DPC
R1803 100K 5% R11-0104042-W08 AUX1N_DPC
+3.3V_BUS
R1806 1M 5% R11-0105012-W08 DPC_DONGLE_DET
R1807 5.1M 5% R11-0515012-Y01
J1800
DPC_0P 1 ML_Lane_0p
DPC_0N 3 ML_Lane_0n
DPC_1P 4 ML_Lane_1p
DPC_1N 6 ML_Lane_1n
DPC_2P 7 ML_Lane_2p
DPC_2N 9 ML_Lane_2n
DPC_3P 10 ML_Lane_3p
DPC_3N 12 ML_Lane_3n
AUX1P_DPC 15 AUX_CHp
AUX1N_DPC 17 AUX_CHn
HPD_DPC 18 Hot_Det
DPC_DONGLE_DET 13 CONFIG 1
14 CONFIG 2
DP_PWR 20
PWR_RTN 19
G1 G2 G3 G4 GND_0 GND_1 GND_2 GND_3 GND_6
COMMON DP_W/GASKET VVVV303v1 N5W-20M0020-F02
+3.3V_DP
C1817 22uF 6.3V DNI XXXV303v1 C11-2267014-T04
C1840 22uF 6.3V DNI XXXV303v1 C11-2267014-T04
C5106 22uF 6.3V COMMON VVVV303v1 C11-2267014-T04
F1800 1.5A VVVV303v1 D08-0200700-P16
+3.3V_BUS
Remove 100UF/1206 and Add 22UF/0805 x2pcs
R1821–R1828 499R 1% VVVV303v1 R11-4990T12-W08 COMMON
DTX2P DTX2M DTX1P DTX1M DTX0P DTX0M DTXCAP DTXCAM
DPD_GND
+5V_VESA
R1830 2.2K 5% R11-0222012-W08
R1831 2.2K 5% R11-0222012-W08
9,11 IN DVI_EN
Q1820 SI2304DS COMMON VVVV303v1 D03-7002E49-O05
DDC3CLK_HDMI OUT 9
DDC3DAT_HDMI BI 9
Q1823 MMBT3904 COMMON VVVV303v1 D02-03904L9-NX5
R1829 10K 5% R11-0103012-W08
R1828 10K 5% R11-0103012-W08
HPD_HDMI
7 OUT HPD5
C1737 1uF 6.3V COMMON VVVV303v1 C11-105A312-M09
J2501
HPD_HDMI 19 HP_DET
18 +5V
17 GND
DDC3DAT_HDMI 16 SDA
DDC3CLK_HDMI 15 SCL
14 NC
13 CE Remote
DTXCAM 12 CK-
11 CK_Shield
DTXCAP 10 CK+
DTX0M 9 D0-
8 D0_Shield
DTX0P 7 D0+
DTX1M 6 D1-
5 D1_Shield
DTX1P 4 D1+
DTX2M 3 D2-
2 D2_Shield
DTX2P 1 D2+
SHELL1 X1
SHELL2 X2
MEC1
MEC2
SHELL3 X3
SHELL4 X4
HDMI19PSM_BLACK-RH-5
HDMI_S19_16
COMMON
VVVV303v1
N5Y-19M0580-W06

OPTIONAL ESD PROTECTION DIODES

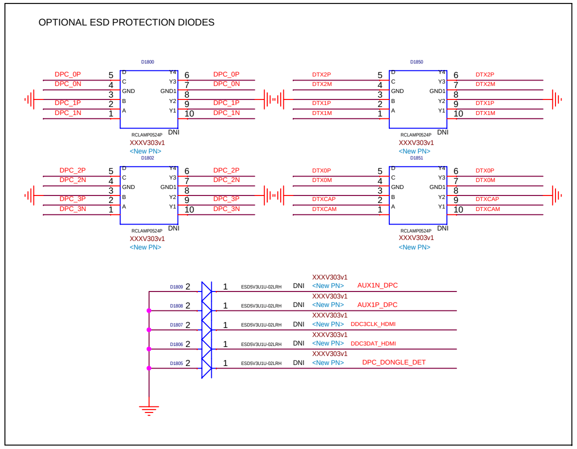
D1800 RCLAMP0524P XXXV303v1 <New PN> DNI
DPC_0P DPC_0N DPC_1P DPC_1N
D1850 RCLAMP0524P XXXV303v1 <New PN> DNI
DTX2P DTX2M DTX1P DTX1M
D1802 RCLAMP0524P XXXV303v1 <New PN> DNI
DPC_2P DPC_2N DPC_3P DPC_3N
D1851 RCLAMP0524P XXXV303v1 <New PN> DNI
DTX0P DTX0M DTXCAP DTXCAM
D1809 ESD5V3U1U-02LRH DNI XXXV303v1 <New PN> AUX1N_DPC
D1808 ESD5V3U1U-02LRH DNI XXXV303v1 <New PN> AUX1P_DPC
D1807 ESD5V3U1U-02LRH DNI XXXV303v1 <New PN> DDC3CLK_HDMI
D1806 ESD5V3U1U-02LRH DNI XXXV303v1 <New PN> DDC3DAT_HDMI
D1805 ESD5V3U1U-02LRH DNI XXXV303v1 <New PN> DPC_DONGLE_DET

HDMISCREW
SCREW
VVVV303v1
E43-1303012-H75
COMMON

MICRO-STAR INT'L CO.,LTD

MS-V303

Size	Document Description	Rev
Custom	10 CURACAO PITCAIRN TMDPCD DP H	1.0

Date: Thursday, August 01, 2013 Sheet 10 of 24

(11) CURACAO LVTMDPEF dDVI

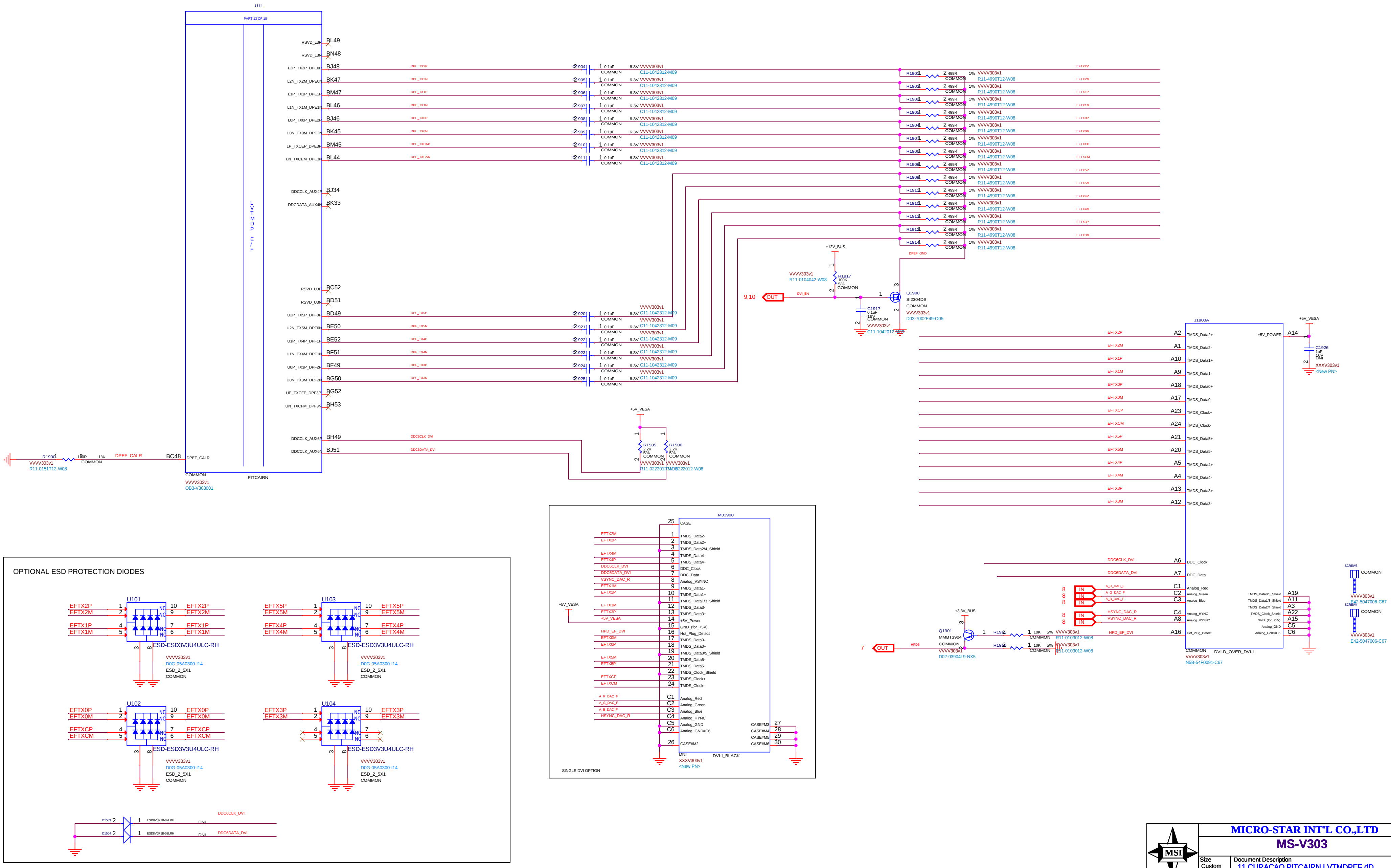
U1L
PART 13 OF 18
LVTMDP E/F
RSVD_L3P BL49
RSVD_L3N BN48
L2P_TX2P_DPE0P BJ48 DPE_TX2P
L2N_TX2M_DPE0N BK47 DPE_TX2N
L1P_TX1P_DPE1P BM47 DPE_TX1P
L1N_TX1M_DPE1N BL46 DPE_TX1N
L0P_TX0P_DPE2P BJ46 DPE_TX0P
L0N_TX0M_DPE2N BK45 DPE_TX0N
LP_TXCEP_DPE3P BM45 DPE_TXCAP
LN_TXCEM_DPE3N BL44 DPE_TXCAN
DDCCLK_AUX4P BJ34
DDCDATA_AUX4N BK33
RSVD_U3P BC52
RSVD_U3N BD51
U2P_TX5P_DPF0P BD49 DPF_TX5P
U2N_TX5M_DPF0N BE50 DPF_TX5N
U1P_TX4P_DPF1P BE52 DPF_TX4P
U1N_TX4M_DPF1N BF51 DPF_TX4N
U0P_TX3P_DPF2P BF49 DPF_TX3P
U0N_TX3M_DPF2N BG50 DPF_TX3N
UP_TXCFP_DPF3P BG52
UN_TXCFM_DPF3N BH53
DDCCLK_AUX6P BH49 DDC6CLK_DVI
DDCCLK_AUX6N BJ51 DDC6DATA_DVI
DPEF_CALR BC48 DPEF_CALR
COMMON
PITCAIRN
VVVV303v1
OB3-V303001
R1900 1 2 150R 1% COMMON
R11-0151T12-W08
C1904 C1905 C1906 C1907 C1908 C1909 C1910 C1911
C1920 C1921 C1922 C1923 C1924 C1925
0.1uF 6.3V COMMON VVVV303v1
C11-1042312-M09
R1901 R1903 R1902 R1905 R1904 R1907 R1906 R1908 R1909 R1911 R1910 R1913 R1912 R1914
499R 1% COMMON VVVV303v1
R11-4990T12-W08
EFTX2P EFTX2M EFTX1P EFTX1M EFTX0P EFTX0M EFTXCP EFTXCM EFTX5P EFTX5M EFTX4P EFTX4M EFTX3P EFTX3M
DPEF_GND
+12V_BUS
R1917 100K 5% COMMON
VVVV303v1
R11-0104042-W08
9,10 OUT DVI_EN
C1917 0.1uF 16V COMMON
VVVV303v1
C11-1042012-M09
Q1900
SI2304DS
COMMON
VVVV303v1
D03-7002E49-O05
+5V_VESA
R1505 2.2K 5% COMMON
R1506 2.2K 5% COMMON
VVVV303v1
R11-0222012-W08
J1900A
A2 TMDS_Data2+
A1 TMDS_Data2-
A10 TMDS_Data1+
A9 TMDS_Data1-
A18 TMDS_Data0+
A17 TMDS_Data0-
A23 TMDS_Clock+
A24 TMDS_Clock-
A21 TMDS_Data5+
A20 TMDS_Data5-
A5 TMDS_Data4+
A4 TMDS_Data4-
A13 TMDS_Data3+
A12 TMDS_Data3-
A6 DDC_Clock
A7 DDC_Data
C1 Analog_Red
C2 Analog_Green
C3 Analog_Blue
C4 Analog_HYNC
A8 Analog_VSYNC
A16 Hot_Plug_Detect
+5V_POWER A14
TMDS_Data0/5_Shield A19
TMDS_Data1/3_Shield A11
TMDS_Data2/4_Shield A3
TMDS_Clock_Shield A22
GND_(for_+5V) A15
Analog_GND C5
Analog_GND#C6 C6
COMMON DVI-D_OVER_DVI-I
VVVV303v1
N5B-54F0091-C67
C1926 1uF 16V DNI
XXXV303v1
<New PN>
8 IN A_R_DAC_F
8 IN A_G_DAC_F
8 IN A_B_DAC_F
8 IN HSYNC_DAC_R
8 IN VSYNC_DAC_R
HPD_EF_DVI
+3.3V_BUS
Q1901
MMBT3904
COMMON
VVVV303v1
D02-03904L9-NX5
7 OUT HPD6
R1915 10K 5% COMMON
R1916 10K 5% COMMON
VVVV303v1
R11-0103012-W08
SCREW3 COMMON
SCREW4 COMMON
VVVV303v1
E42-5047006-C67
MJ1900
25 CASE
1 TMDS_Data2- EFTX2M
2 TMDS_Data2+ EFTX2P
3 TMDS_Data2/4_Shield
4 TMDS_Data4- EFTX4M
5 TMDS_Data4+ EFTX4P
6 DDC_Clock DDC6CLK_DVI
7 DDC_Data DDC6DATA_DVI
8 Analog_VSYNC VSYNC_DAC_R
9 TMDS_Data1- EFTX1M
10 TMDS_Data1+ EFTX1P
11 TMDS_Data1/3_Shield
12 TMDS_Data3- EFTX3M
13 TMDS_Data3+ EFTX3P
14 +5V_Power +5V_VESA
15 GND_(for_+5V)
16 Hot_Plug_Detect HPD_EF_DVI
17 TMDS_Data0- EFTX0M
18 TMDS_Data0+ EFTX0P
19 TMDS_Data0/5_Shield
20 TMDS_Data5- EFTX5M
21 TMDS_Data5+ EFTX5P
22 TMDS_Clock_Shield
23 TMDS_Clock+ EFTXCP
24 TMDS_Clock- EFTXCM
C1 Analog_Red A_R_DAC_F
C2 Analog_Green A_G_DAC_F
C3 Analog_Blue A_B_DAC_F
C4 Analog_HYNC HSYNC_DAC_R
C5 Analog_GND
C6 Analog_GND#C6
26 CASE#M2
CASE#M3 27
CASE#M4 28
CASE#M5 29
CASE#M6 30
DNI DVI-I_BLACK
XXXV303v1
<New PN>
SINGLE DVI OPTION
OPTIONAL ESD PROTECTION DIODES
U101 EFTX2P EFTX2M EFTX1P EFTX1M
U103 EFTX5P EFTX5M EFTX4P EFTX4M
U102 EFTX0P EFTX0M EFTXCP EFTXCM
U104 EFTX3P EFTX3M
NC
ESD-ESD3V3U4ULC-RH
VVVV303v1
D0G-05A0300-I14
ESD_2_5X1
COMMON
D1503 2 1 ESD8V0R1B-02LRH DNI DDC6CLK_DVI
D1504 2 1 ESD8V0R1B-02LRH DNI DDC6DATA_DVI

MICRO-STAR INT'L CO.,LTD

MS-V303

Size: Custom
Document Description: 11 CURACAO PITCAIRN LVTMDPEF dD
Rev: 1.0
Date: Thursday, August 01, 2013
Sheet 11 of 24

(12) CURACAO POWER

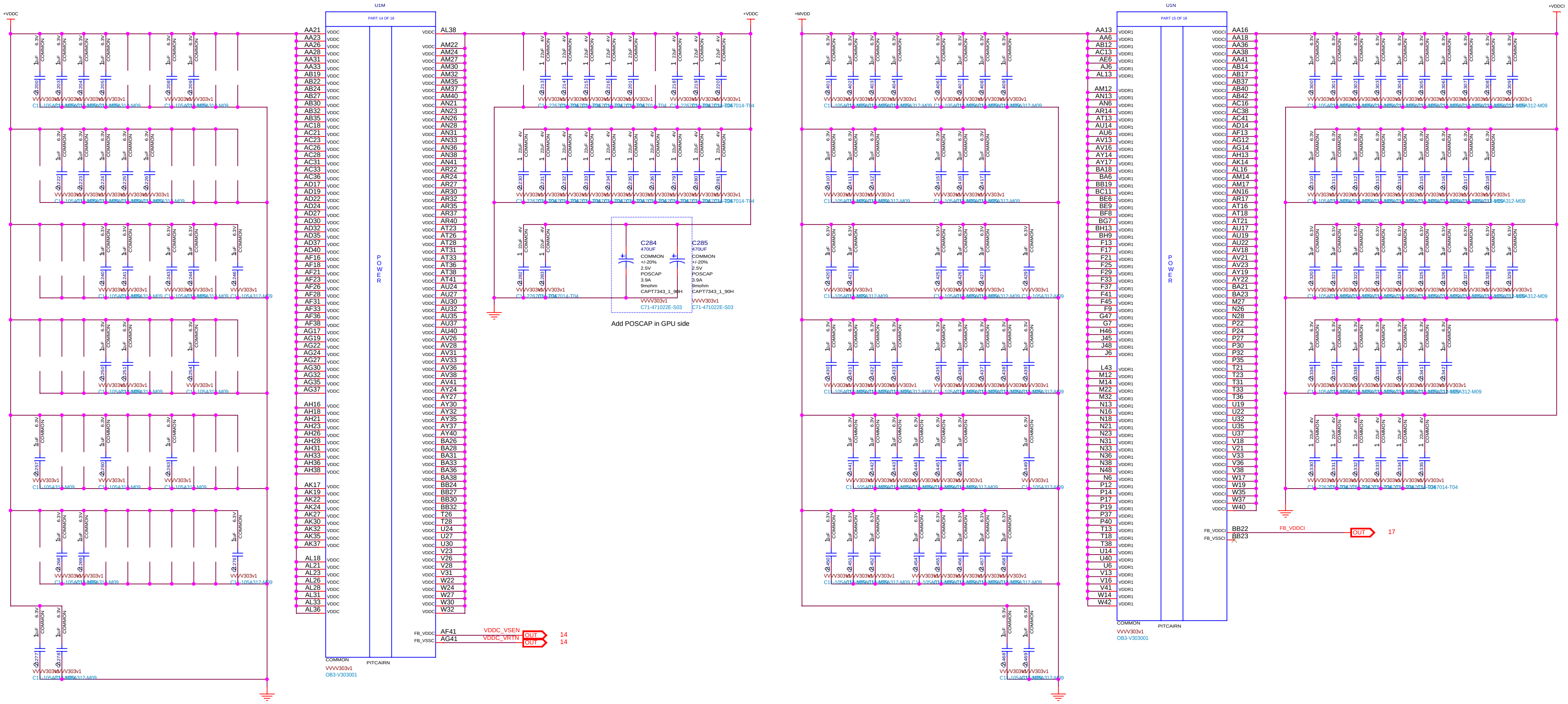
U1M
PART 14 OF 18
+VDDC
POWER
PITCAIRN
COMMON
VVVV303v1
OB3-V303001
VDDC
AA21
AA23
AA26
AA28
AA31
AA33
AB19
AB22
AB24
AB27
AB30
AB32
AB35
AC18
AC21
AC23
AC26
AC28
AC31
AC33
AC36
AD17
AD19
AD22
AD24
AD27
AD30
AD32
AD35
AD37
AD40
AF16
AF18
AF21
AF23
AF26
AF28
AF31
AF33
AF36
AF38
AG17
AG19
AG22
AG24
AG27
AG30
AG32
AG35
AG37
AH16
AH18
AH21
AH23
AH26
AH28
AH31
AH33
AH36
AH38
AK17
AK19
AK22
AK24
AK27
AK30
AK32
AK35
AK37
AL18
AL21
AL23
AL26
AL28
AL31
AL33
AL36
AL38
AM22
AM24
AM27
AM30
AM32
AM35
AM37
AM40
AN21
AN23
AN26
AN28
AN31
AN33
AN36
AN38
AN41
AR22
AR24
AR27
AR30
AR32
AR35
AR37
AR40
AT23
AT26
AT28
AT31
AT33
AT36
AT38
AT41
AU24
AU27
AU30
AU32
AU35
AU37
AU40
AV26
AV28
AV31
AV33
AV36
AV38
AV41
AY24
AY27
AY30
AY32
AY35
AY37
AY40
BA26
BA28
BA31
BA33
BA36
BA38
BB24
BB27
BB30
BB32
T26
T28
U24
U27
U30
V23
V26
V28
V31
W22
W24
W27
W30
W32
FB_VDDC
FB_VSSC
AF41
AG41
VDDC_VSEN
VDDC_VRTN
OUT
OUT
14
14
1uF
6.3V
COMMON
22uF
4V
C11-105A312-M09
C11-2267014-T04
C200
C203
C204
C205
C208
C209
C222
C223
C224
C225
C226
C240
C241
C243
C244
C246
C250
C251
C254
C257
C260
C263
C268
C269
C276
C277
C278
C213
C214
C215
C216
C201
C218
C219
C220
C230
C231
C232
C233
C234
C235
C236
C279
C280
C281
C282
C283
C284
470UF
COMMON
+/-20%
2.5V
POSCAP
3.9A
9mohm
CAPT7343_1_90H
VVVV303v1
C71-471022E-S03
C285
470UF
COMMON
+/-20%
2.5V
POSCAP
3.9A
9mohm
CAPT7343_1_90H
VVVV303v1
C71-471022E-S03
Add POSCAP in GPU side
+MVDD
C401
C402
C403
C404
C406
C407
C408
C409
C410
C411
C412
C415
C416
C417
C420
C421
C425
C426
C427
C429
C430
C431
C432
C433
C435
C436
C437
C438
C439
C441
C442
C443
C444
C445
C446
C449
C450
C451
C452
C454
C455
C456
C457
C458
C468
C469
U1N
PART 15 OF 18
VDDR1
VDDCI
AA13
AA6
AB12
AC13
AE6
AJ6
AL13
AM12
AN13
AN6
AR14
AT13
AU14
AU6
AV13
AV16
AY14
AY17
BA18
BA6
BB19
BC11
BE6
BE9
BF8
BG7
BH13
BH9
F13
F17
F21
F25
F29
F33
F37
F41
F45
F9
G47
G7
H46
J45
J48
J6
L43
M12
M14
M22
M32
N13
N16
N18
N21
N23
N31
N33
N36
N38
N48
N6
P12
P14
P17
P19
P37
P40
T13
T18
T38
U14
U40
U6
V13
V16
V41
W14
W42
AA16
AA18
AA36
AA38
AA41
AB14
AB17
AB37
AB40
AB42
AC16
AC38
AC41
AD14
AF13
AG12
AG14
AH13
AK14
AL16
AM14
AM17
AN16
AR17
AT16
AT18
AT21
AU17
AU19
AU22
AV18
AV21
AV23
AY19
AY22
BA21
BA23
M27
N26
N28
P22
P24
P27
P30
P32
P35
T21
T23
T31
T33
T36
U19
U22
U32
U35
U37
V18
V21
V33
V36
V38
W17
W19
W35
W37
W40
FB_VDDCI
FB_VSSCI
BB22
BB23
FB_VDDCI
OUT
17
+VDDCI
C300
C301
C302
C303
C304
C305
C306
C307
C308
C309
C310
C311
C312
C313
C314
C315
C316
C317
C318
C320
C321
C322
C323
C324
C325
C326
C327
C328
C329
C336
C337
C338
C339
C340
C341
C342
C330
C331
C332
C333
C334
C335

MICRO-STAR INT'L CO.,LTD
MS-V303

Size	Document Description	Rev
Custom	12 CURACAO PITCAIRN POWER	1.0
Date: Thursday, August 01, 2013	Sheet 12 of 24	

(13) CURACAO GND

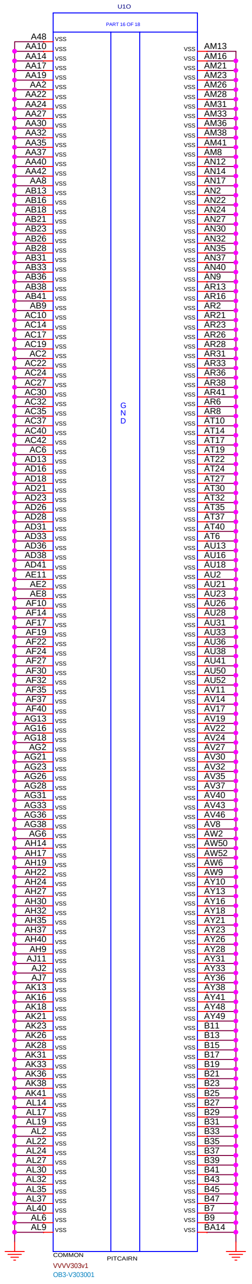
U1O
PART 16 OF 18
GND
A48
AA10
AA14
AA17
AA19
AA2
AA22
AA24
AA27
AA30
AA32
AA35
AA37
AA40
AA42
AA8
AB13
AB16
AB18
AB21
AB23
AB26
AB28
AB31
AB33
AB36
AB38
AB41
AB9
AC10
AC14
AC17
AC19
AC2
AC22
AC24
AC27
AC30
AC32
AC35
AC37
AC40
AC42
AC6
AD13
AD16
AD18
AD21
AD23
AD26
AD28
AD31
AD33
AD36
AD38
AD41
AE11
AE2
AE8
AF10
AF14
AF17
AF19
AF22
AF24
AF27
AF30
AF32
AF35
AF37
AF40
AG13
AG16
AG18
AG2
AG21
AG23
AG26
AG28
AG31
AG33
AG36
AG38
AG6
AH14
AH17
AH19
AH22
AH24
AH27
AH30
AH32
AH35
AH37
AH40
AH9
AJ11
AJ2
AJ7
AK13
AK16
AK18
AK21
AK23
AK26
AK28
AK31
AK33
AK36
AK38
AK41
AL14
AL17
AL19
AL2
AL22
AL24
AL27
AL30
AL32
AL35
AL37
AL40
AL6
AL9
AM13
AM16
AM21
AM23
AM26
AM28
AM31
AM33
AM36
AM38
AM41
AM8
AN12
AN14
AN17
AN2
AN22
AN24
AN27
AN30
AN32
AN35
AN37
AN40
AN9
AR13
AR16
AR2
AR21
AR23
AR26
AR28
AR31
AR33
AR36
AR38
AR41
AR6
AR8
AT10
AT14
AT17
AT19
AT22
AT24
AT27
AT30
AT32
AT35
AT37
AT40
AT6
AU13
AU16
AU18
AU2
AU21
AU23
AU26
AU28
AU31
AU33
AU36
AU38
AU41
AU50
AU52
AV11
AV14
AV17
AV19
AV22
AV24
AV27
AV30
AV32
AV35
AV37
AV40
AV43
AV46
AV8
AW2
AW50
AW52
AW6
AW9
AY10
AY13
AY16
AY18
AY21
AY23
AY26
AY28
AY31
AY33
AY36
AY38
AY41
AY48
AY49
B11
B13
B15
B17
B19
B21
B23
B25
B27
B29
B31
B33
B35
B37
B39
B41
B43
B45
B47
B7
B9
BA14
COMMON
PITCAIRN
VVVV303v1
OB3-V303001

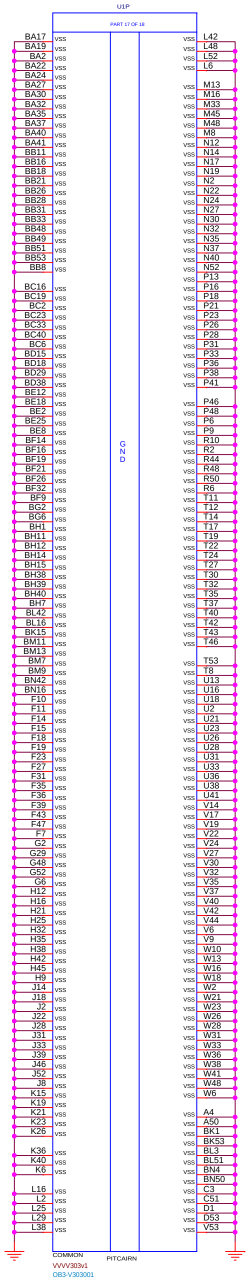
U1P
PART 17 OF 18
GND
BA17
BA19
BA2
BA22
BA24
BA27
BA30
BA32
BA35
BA37
BA40
BA41
BB11
BB16
BB18
BB21
BB26
BB28
BB31
BB33
BB48
BB49
BB51
BB53
BB8
BC16
BC19
BC2
BC23
BC33
BC40
BC6
BD15
BD18
BD29
BD38
BE12
BE18
BE2
BE25
BE8
BF14
BF16
BF19
BF21
BF26
BF32
BF9
BG2
BG6
BH1
BH11
BH12
BH14
BH15
BH38
BH39
BH40
BH7
BL42
BL16
BK15
BM11
BM13
BM7
BM9
BN42
BN16
F10
F11
F14
F15
F18
F19
F23
F27
F31
F35
F36
F39
F43
F47
F7
G2
G29
G48
G52
G6
H12
H16
H21
H25
H32
H35
H38
H42
H45
H9
J14
J18
J2
J22
J28
J31
J33
J39
J46
J52
J8
K15
K19
K21
K23
K26
K36
K40
K6
L16
L2
L25
L29
L38
L42
L48
L52
L6
M13
M16
M33
M45
M48
M8
N12
N14
N17
N19
N2
N22
N24
N27
N30
N32
N35
N37
N40
N52
P13
P16
P18
P21
P23
P26
P28
P31
P33
P36
P38
P41
P46
P48
P6
P9
R10
R2
R44
R48
R50
R6
T11
T12
T14
T17
T19
T22
T24
T27
T30
T32
T35
T37
T40
T42
T43
T46
T53
T8
U13
U16
U18
U2
U21
U23
U26
U28
U31
U33
U36
U38
U41
V14
V17
V19
V22
V24
V27
V30
V32
V35
V37
V40
V42
V44
V6
V9
W10
W13
W16
W18
W2
W21
W23
W26
W28
W31
W33
W36
W38
W41
W48
W6
A4
A50
BK1
BK53
BL3
BL51
BN4
BN50
C3
C51
D1
D53
V53
COMMON
PITCAIRN
VVVV303v1
OB3-V303001

MICRO-STAR INT'L CO.,LTD

MS-V303

Size Custom
Document Description 13 CURACAO PITCAIRN GND
Rev 1.0
Date: Thursday, August 01, 2013
Sheet 13 of 24

(14) VDDC-8228G

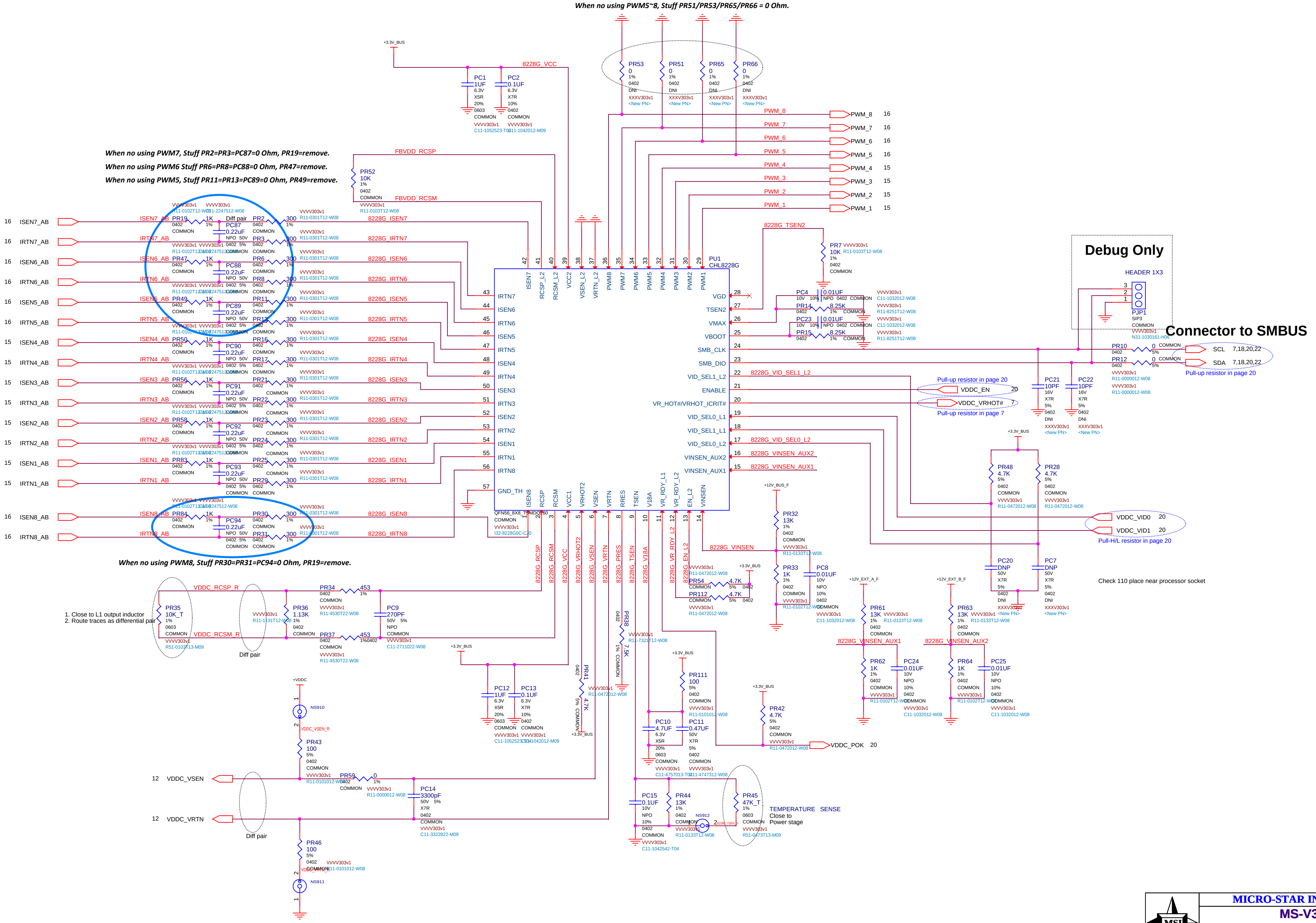

When no using PWM5~8, Stuff PR51/PR53/PR65/PR66 = 0 Ohm.

When no using PWM7, Stuff PR2=PR3=PC87=0 Ohm, PR19=remove.

When no using PWM6 Stuff PR6=PR8=PC88=0 Ohm, PR47=remove.

When no using PWM5, Stuff PR11=PR13=PC89=0 Ohm, PR49=remove.

When no using PWM8, Stuff PR30=PR31=PC94=0 Ohm, PR19=remove.

1. Close to L1 output inductor
2. Route traces as differential pair

Check 110 place near processor socket

TEMPERATURE SENSE
Close to
Power stage

+3.3V_BUS
8228G_VCC
PC1 1UF 6.3V X5R 20% 0603 COMMON VVVV303v1 C11-1052523-T04
PC2 0.1UF 6.3V X7R 10% 0402 COMMON VVVV303v1 C11-1042012-M09
PR53 0 1% 0402 DNI XXXV303v1 <New PN>
PR51 0 1% 0402 DNI XXXV303v1 <New PN>
PR65 0 1% 0402 DNI XXXV303v1 <New PN>
PR66 0 1% 0402 DNI XXXV303v1 <New PN>
PWM_8 16
PWM_7 16
PWM_6 16
PWM_5 16
PWM_4 15
PWM_3 15
PWM_2 15
PWM_1 15
FBVDD_RCSP
FBVDD_RCSM
PR52 10K 1% 0402 COMMON VVVV303v1 R11-0103T12-W08
16 ISEN7_AB
16 IRTN7_AB
16 ISEN6_AB
16 IRTN6_AB
16 ISEN5_AB
16 IRTN5_AB
15 ISEN4_AB
15 IRTN4_AB
15 ISEN3_AB
15 IRTN3_AB
15 ISEN2_AB
15 IRTN2_AB
15 ISEN1_AB
15 IRTN1_AB
16 ISEN8_AB
16 IRTN8_AB
PR19 1K 1% 0402 COMMON VVVV303v1 R11-0102T12-W08
PC87 0.22uF NPO 50V 0402 5% COMMON VVVV303v1 C11-2247512-W08
Diff pair
PR2 300 1% 0402 COMMON VVVV303v1 R11-0301T12-W08
PR3 300 1% 0402 COMMON VVVV303v1 R11-0301T12-W08
PR47 1K · PC88 0.22uF · PR6 300 · PR8 300
PR49 1K · PC89 0.22uF · PR11 300 · PR13 300
PR50 1K · PC90 0.22uF · PR16 300 · PR17 300
PR56 1K · PC91 0.22uF · PR21 300 · PR22 300
PR58 1K · PC92 0.22uF · PR23 300 · PR24 300
PR83 1K · PC93 0.22uF · PR25 300 · PR29 300
PR84 1K · PC94 0.22uF · PR30 300 · PR31 300
8228G_ISEN7
8228G_IRTN7
8228G_ISEN6
8228G_IRTN6
8228G_ISEN5
8228G_IRTN5
8228G_ISEN4
8228G_IRTN4
8228G_ISEN3
8228G_IRTN3
8228G_ISEN2
8228G_IRTN2
8228G_ISEN1
8228G_IRTN1
8228G_ISEN8
8228G_IRTN8
PU1 CHL8228G
QFN56_8X8_TSMDQ260 COMMON VVVV303v1 I32-8228G0C-CJ0
ISEN7 RCSP_L2 RCSM_L2 VCC2 VSEN_L2 VRTN_L2 PWM8 PWM7 PWM6 PWM5 PWM4 PWM3 PWM2 PWM1
IRTN7 ISEN6 IRTN6 ISEN5 IRTN5 ISEN4 IRTN4 ISEN3 IRTN3 ISEN2 IRTN2 ISEN1 IRTN1 IRTN8 GND_TH
VGD TSEN2 VMAX VBOOT SMB_CLK SMB_DIO VID_SEL1_L2 ENABLE VR_HOT#/VRHOT_ICRIT# VID_SEL0_L1 VID_SEL1_L1 VID_SEL0_L2 VINSEN_AUX2 VINSEN_AUX1
ISEN8 RCSP RCSM VCC1 VRHOT2 VSEN VRTN RRES TSEN V18A VR_RDY_L1 VR_RDY_L2 EN_L2 VINSEN
8228G_TSEN2
PR7 10K 1% 0402 COMMON VVVV303v1 R11-0103T12-W08
PC4 0.01UF 10V 10% NPO 0402 COMMON VVVV303v1 C11-1032012-W08
PR14 8.25K 1% 0402 COMMON VVVV303v1 R11-8251T12-W08
PC23 0.01UF 10V 10% NPO 0402 COMMON VVVV303v1 C11-1032012-W08
PR15 8.25K 1% 0402 COMMON VVVV303v1 R11-8251T12-W08
8228G_VID_SEL1_L2
8228G_VID_SEL0_L2
8228G_VINSEN_AUX2
8228G_VINSEN_AUX1
Debug Only
HEADER 1X3
PJP1 SIP3 COMMON VVVV303v1 N31-1030161-H06
Connector to SMBUS
PR10 0 5% 0402 COMMON
PR12 0 5% 0402 COMMON VVVV303v1 R11-0000012-W08
SCL 7,18,20,22
SDA 7,18,20,22
Pull-up resistor in page 20
PC21 10PF 16V X7R 5% 0402 DNI XXXV303v1 <New PN>
PC22 10PF 16V X7R 5% 0402 DNI XXXV303v1 <New PN>
VDDC_EN 20
Pull-up resistor in page 20
VDDC_VRHOT# 7
Pull-up resistor in page 7
PR48 4.7K 5% 0402 COMMON VVVV303v1 R11-0472012-W08
PR28 4.7K 5% 0402 COMMON VVVV303v1 R11-0472012-W08
VDDC_VID0 20
VDDC_VID1 20
Pull-H/L resistor in page 20
PC20 DNP 50V X7R 5% 0402 DNI XXXV303v1 <New PN>
PC7 DNP 50V X7R 5% 0402 DNI XXXV303v1 <New PN>
8228G_RCSP 8228G_RCSM 8228G_VCC 8228G_VRHOT2 8228G_VSEN 8228G_VRTN 8228G_PRES 8228G_TSEN 8228G_V18A 8228G_VR_RDY_L2 8228G_EN_L2
8228G_VINSEN
+12V_BUS_F
PR32 13K 1% 0402 COMMON VVVV303v1 R11-0133T12-W08
PR33 1K 1% 0402 COMMON VVVV303v1 R11-0102T12-W08
PC8 0.01UF 10V NPO 10% 0402 COMMON VVVV303v1 C11-1032012-W08
PR54 4.7K 5% 0402 COMMON VVVV303v1 R11-0472012-W08
PR112 4.7K 5% 0402 COMMON VVVV303v1 R11-0472012-W08
+12V_EXT_A_F
+12V_EXT_B_F
PR61 13K 1% 0402 COMMON VVVV303v1 R11-0133T12-W08
PR63 13K 1% 0402 COMMON VVVV303v1 R11-0133T12-W08
PR62 1K 1% 0402 COMMON VVVV303v1 R11-0102T12-W08
PC24 0.01UF 10V NPO 10% 0402 COMMON VVVV303v1 C11-1032012-W08
PR64 1K 1% 0402 COMMON VVVV303v1 R11-0102T12-W08
PC25 0.01UF 10V NPO 10% 0402 COMMON VVVV303v1 C11-1032012-W08
VDDC_RCSP_R
VDDC_RCSM_R
PR35 10K_T 1% 0603 COMMON VVVV303v1 R51-0103T13-M09
PR36 1.13K 1% 0402 COMMON VVVV303v1 R11-1131T12-W08
PR34 453 1% 0402 COMMON VVVV303v1 R11-4530T22-W08
PR37 453 1% 0402 COMMON VVVV303v1 R11-4530T22-W08
PC9 270PF 50V 5% NPO COMMON VVVV303v1 C11-2711022-W08
Diff pair
PC12 1UF 6.3V X5R 20% 0603 COMMON VVVV303v1 C11-1052523-T04
PC13 0.1UF 6.3V X7R 10% 0402 COMMON VVVV303v1 C11-1042012-M09
PR41 4.7K 5% 0402 COMMON VVVV303v1 R11-0472012-W08
PR38 7.5K 1% 0402 COMMON VVVV303v1 R11-7321T12-W08
PR111 100 5% 0402 COMMON VVVV303v1 R11-0101012-W08
PC10 4.7UF 6.3V X5R 20% 0603 COMMON VVVV303v1 C11-4757013-T04
PC11 0.47UF 50V X7R 5% 0402 COMMON VVVV303v1 C11-4747312-W08
PR42 4.7K 5% 0402 COMMON VVVV303v1 R11-0472012-W08
VDDC_POK 20
+VDDC
NS910
VDDC_VSEN_R
PR43 100 5% 0402 COMMON VVVV303v1 R11-0101012-W08
12 VDDC_VSEN
12 VDDC_VRTN
PR59 0 1% 0402 COMMON VVVV303v1 R11-0000012-W08
PC14 3300pF 50V 5% X7R 0402 COMMON VVVV303v1 C11-3322822-M09
Diff pair
PR46 100 5% 0402 COMMON VVVV303v1 R11-0101012-W08
VDDC_VRTN_R
NS911
PC15 0.1UF 10V NPO 10% 0402 COMMON VVVV303v1 C11-1042542-T04
PR44 13K 1% 0402 COMMON VVVV303v1 R11-0133T12-W08
NS912
8228G_TSEN_D
PR45 47K_T 1% 0603 COMMON VVVV303v1 R51-0473T13-M09

MICRO-STAR INT'L CO.,LTD
MS-V303

Size	Document Description	Rev
Custom	14 VDDC-8228G	1.0

Date: Thursday, August 01, 2013 Sheet 14 of 24

(15)VDDC Phase 1-4

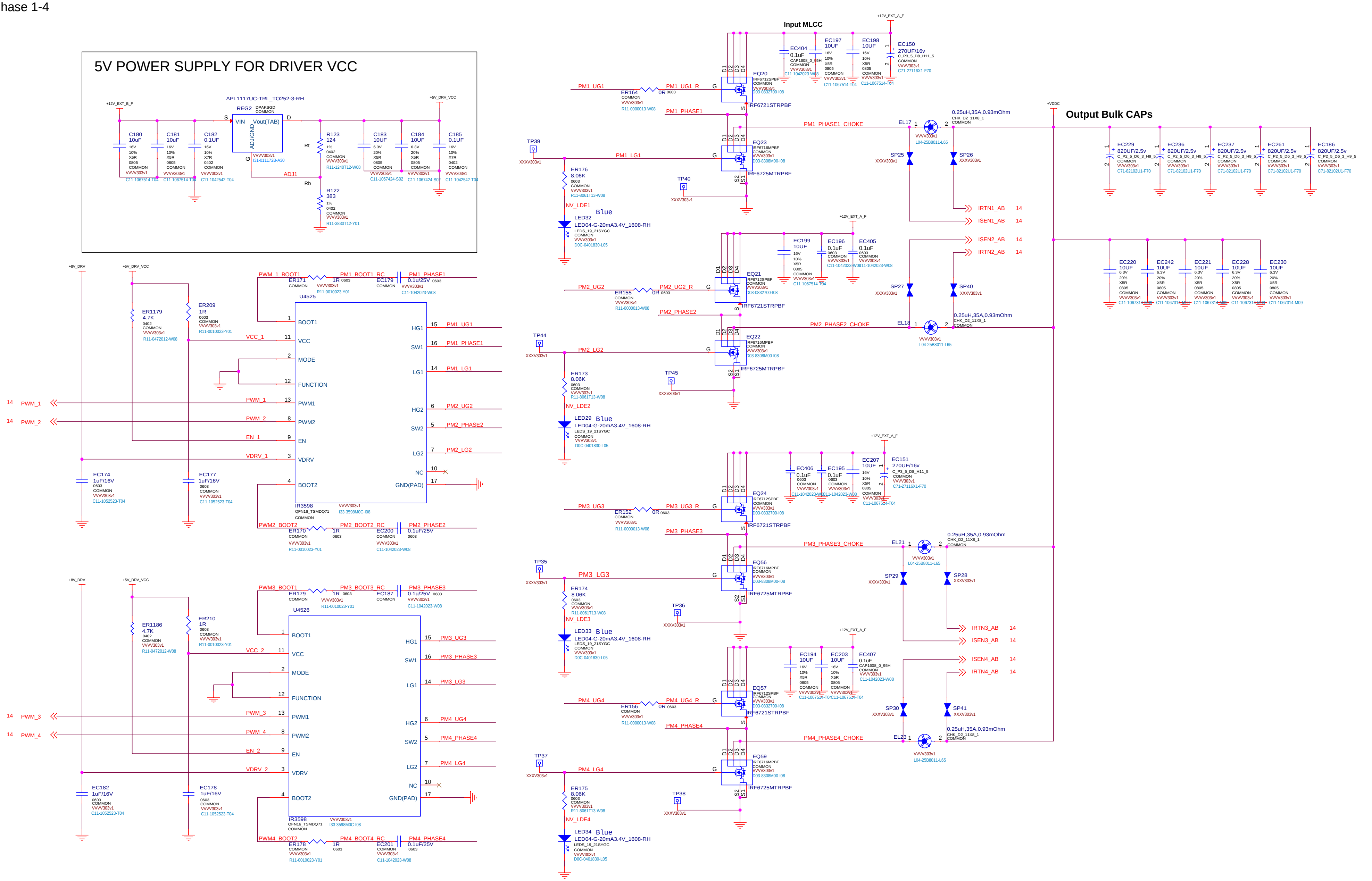
5V POWER SUPPLY FOR DRIVER VCC
+12V_EXT_B_F
APL1117UC-TRL_TO252-3-RH
REG2 DPAKSGD COMMON
S VIN Vout(TAB) D
ADJ/GND G
VVVV303v1 I31-011172B-A30
ADJ1
Rt Rb
C180 10uF 16V 10% X5R 0805 COMMON VVVV303v1 C11-1067514-T04
C181 10uF 16V 10% X5R 0805 COMMON VVVV303v1 C11-1067514-T04
C182 0.1UF 16V 10% X7R 0402 COMMON VVVV303v1 C11-1042542-T04
R123 124 1% 0402 COMMON VVVV303v1 R11-1240T12-W08
R122 383 1% 0402 COMMON VVVV303v1 R11-3830T12-Y01
C183 10UF 6.3V 20% X5R 0805 COMMON VVVV303v1 C11-1067424-S02
C184 10UF 6.3V 20% X5R 0805 COMMON VVVV303v1 C11-1067424-S02
C185 0.1UF 16V 10% X7R 0402 COMMON VVVV303v1 C11-1042542-T04
+5V_DRV_VCC
+8V_DRV
ER1179 4.7K 0402 COMMON VVVV303v1 R11-0472012-W08
ER209 1R 0603 COMMON VVVV303v1 R11-0010023-Y01
EC174 1uF/16V 0603 COMMON VVVV303v1 C11-1052523-T04
EC177 1uF/16V 0603 COMMON VVVV303v1 C11-1052523-T04
PWM_1_BOOT1 ER171 1R 0603 COMMON VVVV303v1 R11-0010023-Y01
PM1_BOOT1_RC EC179 0.1u/25V 0603 COMMON VVVV303v1 C11-1042023-W08 PM1_PHASE1
U4525
1 BOOT1
11 VCC_1 VCC
2 MODE
12 FUNCTION
14 PWM_1 13 PWM1
14 PWM_2 8 PWM2
EN_1 9 EN
VDRV_1 3 VDRV
4 BOOT2
HG1 15 PM1_UG1
SW1 16 PM1_PHASE1
LG1 14 PM1_LG1
HG2 6 PM2_UG2
SW2 5 PM2_PHASE2
LG2 7 PM2_LG2
NC 10
GND(PAD) 17
IR3598 QFN16_TSMDQ71 COMMON VVVV303v1 I33-3598M0C-I08
PWM2_BOOT2 ER170 1R 0603 COMMON VVVV303v1 R11-0010023-Y01
PM2_BOOT2_RC EC200 0.1uF/25V 0603 COMMON VVVV303v1 C11-1042023-W08 PM2_PHASE2
ER1186 4.7K 0402 COMMON VVVV303v1 R11-0472012-W08
ER210 1R 0603 COMMON VVVV303v1 R11-0010023-Y01
EC182 1uF/16V 0603 COMMON VVVV303v1 C11-1052523-T04
EC178 1uF/16V 0603 COMMON VVVV303v1 C11-1052523-T04
PWM3_BOOT1 ER179 1R 0603 COMMON VVVV303v1 R11-0010023-Y01
PM3_BOOT3_RC EC187 0.1u/25V 0603 COMMON VVVV303v1 C11-1042023-W08 PM3_PHASE3
U4526
VCC_2 11 VCC
14 PWM_3 13 PWM1
14 PWM_4 8 PWM2
EN_2 9 EN
VDRV_2 3 VDRV
HG1 15 PM3_UG3
SW1 16 PM3_PHASE3
LG1 14 PM3_LG3
HG2 6 PM4_UG4
SW2 5 PM4_PHASE4
LG2 7 PM4_LG4
PWM4_BOOT2 ER178 1R 0603 COMMON VVVV303v1 R11-0010023-Y01
PM4_BOOT4_RC EC201 0.1uF/25V 0603 COMMON VVVV303v1 C11-1042023-W08 PM4_PHASE4
Input MLCC
+12V_EXT_A_F
EC404 0.1uF CAP1608_0_95H COMMON VVVV303v1 C11-1042023-W08
EC197 10UF 16V 10% X5R 0805 COMMON VVVV303v1 C11-1067514-T04
EC198 10UF 16V 10% X5R 0805 COMMON VVVV303v1 C11-1067514-T04
EC150 270UF/16v C_P3_5_D8_H11_5 COMMON VVVV303v1 C71-27116X1-F70
EQ20 IRF6712SPBF COMMON VVVV303v1 D03-0832700-I08 IRF6721STRPBF
PM1_UG1 ER164 0R 0603 COMMON VVVV303v1 R11-0000013-W08 PM1_UG1_R
PM1_PHASE1
PM1_PHASE1_CHOKE
EQ23 IRF6716MPBF COMMON VVVV303v1 D03-8308M00-I08 IRF6725MTRPBF
TP39 XXXV303v1 PM1_LG1
ER176 8.06K 0603 COMMON VVVV303v1 R11-8061T13-W08
TP40 XXXV303v1
NV_LDE1
LED32 Blue LED04-G-20mA3.4V_1608-RH LEDS_19_21SYGC COMMON VVVV303v1 D0C-0401830-L05
EL17 0.25uH,35A,0.93mOhm CHK_D2_11X8_1 COMMON VVVV303v1 L04-25B8011-L65
SP25 XXXV303v1
SP26 XXXV303v1
IRTN1_AB 14
ISEN1_AB 14
ISEN2_AB 14
IRTN2_AB 14
SP27 XXXV303v1
SP40 XXXV303v1
EC199 10UF 16V 10% X5R 0805 COMMON VVVV303v1 C11-1067514-T04
EC196 0.1uF 0603 COMMON VVVV303v1 C11-1042023-W08
EC405 0.1uF 0603 COMMON VVVV303v1 C11-1042023-W08
EQ21 IRF6712SPBF COMMON VVVV303v1 D03-0832700-I08 IRF6721STRPBF
PM2_UG2 ER155 0R 0603 COMMON VVVV303v1 R11-0000013-W08 PM2_UG2_R
PM2_PHASE2
PM2_PHASE2_CHOKE
EL18 0.25uH,35A,0.93mOhm CHK_D2_11X8_1 COMMON VVVV303v1 L04-25B8011-L65
EQ22 IRF6716MPBF COMMON VVVV303v1 D03-8308M00-I08 IRF6725MTRPBF
TP44 XXXV303v1 PM2_LG2
ER173 8.06K 0603 COMMON VVVV303v1 R11-8061T13-W08
TP45 XXXV303v1
NV_LDE2
LED29 Blue LED04-G-20mA3.4V_1608-RH LEDS_19_21SYGC COMMON VVVV303v1 D0C-0401830-L05
+VDDC
Output Bulk CAPs
EC229 820UF/2.5v C_P2_5_D6_3_H9_5 COMMON VVVV303v1 C71-82102U1-F70
EC236 820UF/2.5v C_P2_5_D6_3_H9_5 COMMON VVVV303v1 C71-82102U1-F70
EC237 820UF/2.5v C_P2_5_D6_3_H9_5 COMMON VVVV303v1 C71-82102U1-F70
EC261 820UF/2.5v C_P2_5_D6_3_H9_5 COMMON VVVV303v1 C71-82102U1-F70
EC186 820UF/2.5v C_P2_5_D6_3_H9_5 COMMON VVVV303v1 C71-82102U1-F70
EC220 10UF 6.3V 20% X5R 0805 COMMON VVVV303v1 C11-1067314-M09
EC242 10UF 6.3V 20% X5R 0805 COMMON VVVV303v1 C11-1067314-M09
EC221 10UF 6.3V 20% X5R 0805 COMMON VVVV303v1 C11-1067314-M09
EC228 10UF 6.3V 20% X5R 0805 COMMON VVVV303v1 C11-1067314-M09
EC230 10UF 6.3V 20% X5R 0805 COMMON VVVV303v1 C11-1067314-M09
EC406 0.1uF 0603 COMMON VVVV303v1 C11-1042023-W08
EC195 0.1uF 0603 COMMON VVVV303v1 C11-1042023-W08
EC207 10UF 16V 10% X5R 0805 COMMON VVVV303v1 C11-1067514-T04
EC151 270UF/16v C_P3_5_D8_H11_5 COMMON VVVV303v1 C71-27116X1-F70
EQ24 IRF6712SPBF COMMON VVVV303v1 D03-0832700-I08 IRF6721STRPBF
PM3_UG3 ER152 0R 0603 COMMON VVVV303v1 R11-0000013-W08 PM3_UG3_R
PM3_PHASE3
PM3_PHASE3_CHOKE
EL21 0.25uH,35A,0.93mOhm CHK_D2_11X8_1 COMMON VVVV303v1 L04-25B8011-L65
EQ56 IRF6716MPBF COMMON VVVV303v1 D03-8308M00-I08 IRF6725MTRPBF
TP35 XXXV303v1 PM3_LG3
ER174 8.06K 0603 COMMON VVVV303v1 R11-8061T13-W08
TP36 XXXV303v1
NV_LDE3
LED33 Blue LED04-G-20mA3.4V_1608-RH LEDS_19_21SYGC COMMON VVVV303v1 D0C-0401830-L05
SP29 XXXV303v1
SP28 XXXV303v1
IRTN3_AB 14
ISEN3_AB 14
ISEN4_AB 14
IRTN4_AB 14
EC194 10UF 16V 10% X5R 0805 COMMON VVVV303v1 C11-1067514-T04
EC203 10UF 16V 10% X5R 0805 COMMON VVVV303v1 C11-1067514-T04
EC407 0.1uF CAP1608_0_95H COMMON VVVV303v1 C11-1042023-W08
EQ57 IRF6712SPBF COMMON VVVV303v1 D03-0832700-I08 IRF6721STRPBF
PM4_UG4 ER156 0R 0603 COMMON VVVV303v1 R11-0000013-W08 PM4_UG4_R
PM4_PHASE4
PM4_PHASE4_CHOKE
SP30 XXXV303v1
SP41 XXXV303v1
EL23 0.25uH,35A,0.93mOhm CHK_D2_11X8_1 COMMON VVVV303v1 L04-25B8011-L65
EQ59 IRF6716MPBF COMMON VVVV303v1 D03-8308M00-I08 IRF6725MTRPBF
TP37 XXXV303v1 PM4_LG4
ER175 8.06K 0603 COMMON VVVV303v1 R11-8061T13-W08
TP38 XXXV303v1
NV_LDE4
LED34 Blue LED04-G-20mA3.4V_1608-RH LEDS_19_21SYGC COMMON VVVV303v1 D0C-0401830-L05
D1 D2 D3 D4 G S S2 S1

MICRO-STAR INT'L CO.,LTD

MS-V303

Size	Document Description	Rev
Custom	15 VDDC Phase 1-4	1.0

Date: Thursday, August 01, 2013 Sheet 15 of 24

(16)VDDC Phase 5-8

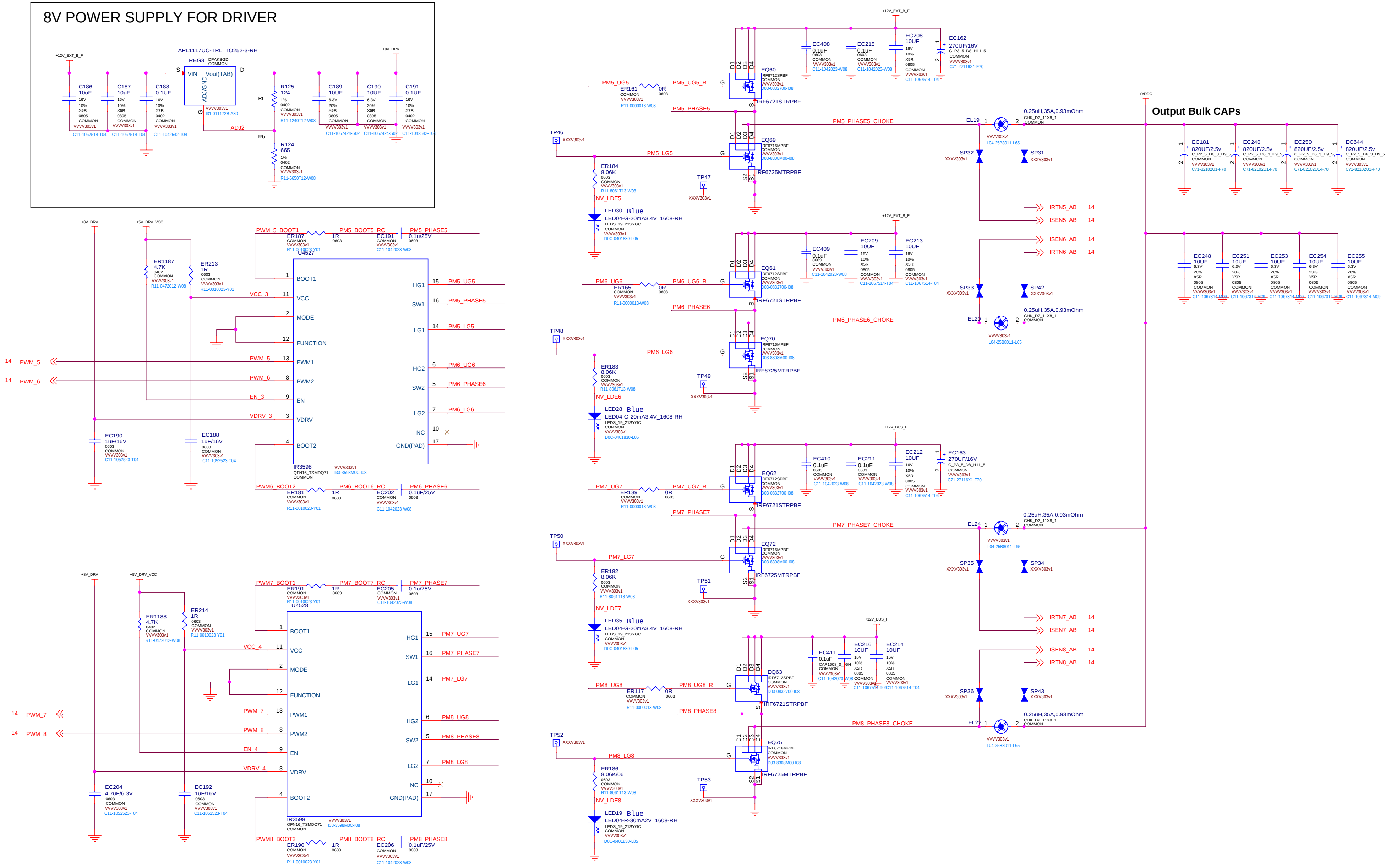
8V POWER SUPPLY FOR DRIVER
+12V_EXT_B_F
APL1117UC-TRL_TO252-3-RH
REG3 DPAKSGD COMMON
VIN
Vout(TAB)
ADJ/GND
S
D
G
ADJ2
Rt
Rb
+8V_DRV
C186 10uF 16V 10% X5R 0805 COMMON VVVV303v1 C11-1067514-T04
C187 10uF 16V 10% X5R 0805 COMMON VVVV303v1 C11-1067514-T04
C188 0.1UF 16V 10% X7R 0402 COMMON VVVV303v1 C11-1042542-T04
VVVV303v1 I31-011172B-A30
R125 124 1% 0402 COMMON VVVV303v1 R11-1240T12-W08
R124 665 1% 0402 COMMON VVVV303v1 R11-6650T12-W08
C189 10UF 6.3V 20% X5R 0805 COMMON VVVV303v1 C11-1067424-S02
C190 10UF 6.3V 20% X5R 0805 COMMON VVVV303v1 C11-1067424-S02
C191 0.1UF 16V 10% X7R 0402 COMMON VVVV303v1 C11-1042542-T04
+8V_DRV
+5V_DRV_VCC
ER1187 4.7K 0402 COMMON VVVV303v1 R11-0472012-W08
ER213 1R 0603 COMMON VVVV303v1 R11-0010023-Y01
PWM_5_BOOT1
ER187 COMMON VVVV303v1 R11-0010023-Y01 1R 0603
PM5_BOOT5_RC
EC191 COMMON VVVV303v1 C11-1042023-W08 0.1u/25V 0603
PM5_PHASE5
U4527
1 BOOT1
11 VCC
2 MODE
12 FUNCTION
13 PWM1
8 PWM2
9 EN
3 VDRV
4 BOOT2
15 HG1
16 SW1
14 LG1
6 HG2
5 SW2
7 LG2
10 NC
17 GND(PAD)
VCC_3
PWM_5
PWM_6
EN_3
VDRV_3
PM5_UG5
PM5_PHASE5
PM5_LG5
PM6_UG6
PM6_PHASE6
PM6_LG6
14 PWM_5
14 PWM_6
EC190 1uF/16V 0603 COMMON VVVV303v1 C11-1052523-T04
EC188 1uF/16V 0603 COMMON VVVV303v1 C11-1052523-T04
IR3598 QFN16_TSMDQ71 COMMON VVVV303v1 I33-3598M0C-I08
PWM6_BOOT2
ER181 COMMON VVVV303v1 R11-0010023-Y01 1R 0603
PM6_BOOT6_RC
EC202 COMMON VVVV303v1 C11-1042023-W08 0.1uF/25V 0603
PM6_PHASE6
+8V_DRV
+5V_DRV_VCC
ER1188 4.7K 0402 COMMON VVVV303v1 R11-0472012-W08
ER214 1R 0603 COMMON VVVV303v1 R11-0010023-Y01
PWM7_BOOT1
ER191 COMMON VVVV303v1 R11-0010023-Y01 1R 0603
PM7_BOOT7_RC
EC205 COMMON VVVV303v1 C11-1042023-W08 0.1u/25V 0603
PM7_PHASE7
U4528
VCC_4
PWM_7
PWM_8
EN_4
VDRV_4
PM7_UG7
PM7_PHASE7
PM7_LG7
PM8_UG8
PM8_PHASE8
PM8_LG8
14 PWM_7
14 PWM_8
EC204 4.7uF/6.3V 0603 COMMON VVVV303v1 C11-1052523-T04
EC192 1uF/16V 0603 COMMON VVVV303v1 C11-1052523-T04
IR3598 QFN16_TSMDQ71 COMMON VVVV303v1 I33-3598M0C-I08
PWM8_BOOT2
ER190 COMMON VVVV303v1 R11-0010023-Y01 1R 0603
PM8_BOOT8_RC
EC206 COMMON VVVV303v1 C11-1042023-W08 0.1uF/25V 0603
PM8_PHASE8
+12V_EXT_B_F
PM5_UG5
ER161 COMMON VVVV303v1 R11-0000013-W08 0R 0603
PM5_UG5_R
G
D1 D2 D3 D4
EQ60 IRF6712SPBF COMMON VVVV303v1 D03-0832700-I08
S
IRF6721STRPBF
EC408 0.1uF 0603 COMMON VVVV303v1 C11-1042023-W08
EC215 0.1uF 0603 COMMON VVVV303v1 C11-1042023-W08
EC208 10UF 16V 10% X5R 0805 COMMON VVVV303v1 C11-1067514-T04
EC162 270UF/16V C_P3_5_D8_H11_5 COMMON VVVV303v1 C71-27116X1-F70
PM5_PHASE5
PM5_PHASE5_CHOKE
TP46 XXXV303v1
PM5_LG5
EQ69 IRF6716MPBF COMMON VVVV303v1 D03-8308M00-I08
IRF6725MTRPBF
S2 S1
ER184 8.06K 0603 COMMON VVVV303v1 R11-8061T13-W08
TP47 XXXV303v1
NV_LDE5
LED30 Blue LED04-G-20mA3.4V_1608-RH LEDS_19_21SYGC COMMON VVVV303v1 D0C-0401830-L05
PM6_UG6
ER165 COMMON VVVV303v1 R11-0000013-W08 0R 0603
PM6_UG6_R
EQ61 IRF6712SPBF COMMON VVVV303v1 D03-0832700-I08
IRF6721STRPBF
EC409 0.1uF 0603 COMMON VVVV303v1 C11-1042023-W08
EC209 10UF 16V 10% X5R 0805 COMMON VVVV303v1 C11-1067514-T04
EC213 10UF 16V 10% X5R 0805 COMMON VVVV303v1 C11-1067514-T04
PM6_PHASE6
PM6_PHASE6_CHOKE
TP48 XXXV303v1
PM6_LG6
EQ70 IRF6716MPBF COMMON VVVV303v1 D03-8308M00-I08
IRF6725MTRPBF
ER183 8.06K 0603 COMMON VVVV303v1 R11-8061T13-W08
TP49 XXXV303v1
NV_LDE6
LED28 Blue LED04-G-20mA3.4V_1608-RH LEDS_19_21SYGC COMMON VVVV303v1 D0C-0401830-L05
+12V_BUS_F
PM7_UG7
ER139 COMMON VVVV303v1 R11-0000013-W08 0R 0603
PM7_UG7_R
EQ62 IRF6712SPBF COMMON VVVV303v1 D03-0832700-I08
IRF6721STRPBF
EC410 0.1uF 0603 COMMON VVVV303v1 C11-1042023-W08
EC211 0.1uF 0603 COMMON VVVV303v1 C11-1042023-W08
EC212 10UF 16V 10% X5R 0805 COMMON VVVV303v1 C11-1067514-T04
EC163 270UF/16V C_P3_5_D8_H11_5 COMMON VVVV303v1 C71-27116X1-F70
PM7_PHASE7
PM7_PHASE7_CHOKE
TP50 XXXV303v1
PM7_LG7
EQ72 IRF6716MPBF COMMON VVVV303v1 D03-8308M00-I08
IRF6725MTRPBF
ER182 8.06K 0603 COMMON VVVV303v1 R11-8061T13-W08
TP51 XXXV303v1
NV_LDE7
LED35 Blue LED04-G-20mA3.4V_1608-RH LEDS_19_21SYGC COMMON VVVV303v1 D0C-0401830-L05
+12V_BUS_F
PM8_UG8
ER117 COMMON VVVV303v1 R11-0000013-W08 0R 0603
PM8_UG8_R
EQ63 IRF6712SPBF COMMON VVVV303v1 D03-0832700-I08
IRF6721STRPBF
EC411 0.1uF CAP1608_0_95H COMMON VVVV303v1 C11-1042023-W08
EC216 10UF 16V 10% X5R 0805 COMMON VVVV303v1 C11-1067514-T04
EC214 10UF 16V 10% X5R 0805 COMMON VVVV303v1 C11-1067514-T04
PM8_PHASE8
PM8_PHASE8_CHOKE
TP52 XXXV303v1
PM8_LG8
EQ75 IRF6716MPBF COMMON VVVV303v1 D03-8308M00-I08
IRF6725MTRPBF
ER186 8.06K/06 0603 COMMON VVVV303v1 R11-8061T13-W08
TP53 XXXV303v1
NV_LDE8
LED19 Blue LED04-R-30mA2V_1608-RH LEDS_19_21SYGC COMMON VVVV303v1 D0C-0401830-L05
EL19 1 2 0.25uH,35A,0.93mOhm CHK_D2_11X8_1 COMMON VVVV303v1 L04-25B8011-L65
EL20 1 2 0.25uH,35A,0.93mOhm CHK_D2_11X8_1 COMMON VVVV303v1 L04-25B8011-L65
EL24 1 2 0.25uH,35A,0.93mOhm CHK_D2_11X8_1 COMMON VVVV303v1 L04-25B8011-L65
EL22 1 2 0.25uH,35A,0.93mOhm CHK_D2_11X8_1 COMMON VVVV303v1 L04-25B8011-L65
SP32 XXXV303v1
SP31 XXXV303v1
SP33 XXXV303v1
SP42 XXXV303v1
SP35 XXXV303v1
SP34 XXXV303v1
SP36 XXXV303v1
SP43 XXXV303v1
IRTN5_AB 14
ISEN5_AB 14
ISEN6_AB 14
IRTN6_AB 14
IRTN7_AB 14
ISEN7_AB 14
ISEN8_AB 14
IRTN8_AB 14
+VDDC
Output Bulk CAPs
EC181 820UF/2.5v C_P2_5_D6_3_H9_5 COMMON VVVV303v1 C71-82102U1-F70
EC240 820UF/2.5v C_P2_5_D6_3_H9_5 COMMON VVVV303v1 C71-82102U1-F70
EC250 820UF/2.5v C_P2_5_D6_3_H9_5 COMMON VVVV303v1 C71-82102U1-F70
EC644 820UF/2.5v C_P2_5_D6_3_H9_5 COMMON VVVV303v1 C71-82102U1-F70
EC248 10UF 6.3V 20% X5R 0805 COMMON VVVV303v1 C11-1067314-M09
EC251 10UF 6.3V 20% X5R 0805 COMMON VVVV303v1 C11-1067314-M09
EC253 10UF 6.3V 20% X5R 0805 COMMON VVVV303v1 C11-1067314-M09
EC254 10UF 6.3V 20% X5R 0805 COMMON VVVV303v1 C11-1067314-M09
EC255 10UF 6.3V 20% X5R 0805 COMMON VVVV303v1 C11-1067314-M09

MICRO-STAR INT'L CO.,LTD

MS-V303

Size	Document Description	Rev
Custom	16 VDDC Phase 5-8	1.0

Date: Thursday, August 01, 2013 Sheet 16 of 24

(16) VDDCI

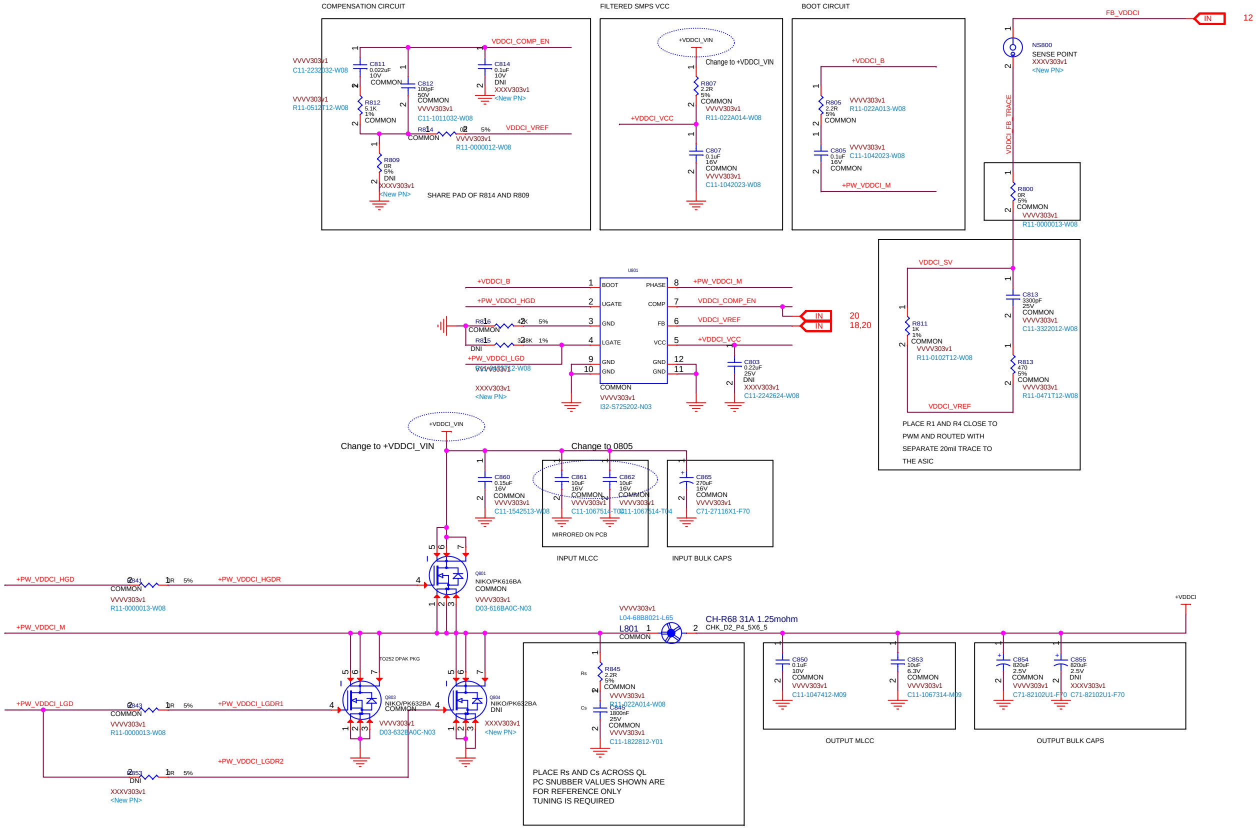
COMPENSATION CIRCUIT
VDDCI_COMP_EN
C811 0.022uF 10V COMMON
VVVV303v1
C11-2232032-W08
C812 100pF 50V COMMON
VVVV303v1
C11-1011032-W08
C814 0.1uF 10V DNI
XXXV303v1
<New PN>
R812 5.1K 1% COMMON
VVVV303v1
R11-0512T12-W08
R814 0R 5% COMMON
VVVV303v1
R11-0000012-W08
VDDCI_VREF
R809 0R 5% DNI
XXXV303v1
<New PN>
SHARE PAD OF R814 AND R809
FILTERED SMPS VCC
+VDDCI_VIN
Change to +VDDCI_VIN
R807 2.2R 5% COMMON
VVVV303v1
R11-022A014-W08
+VDDCI_VCC
C807 0.1uF 16V COMMON
VVVV303v1
C11-1042023-W08
BOOT CIRCUIT
+VDDCI_B
R805 2.2R 5% COMMON
VVVV303v1
R11-022A013-W08
C805 0.1uF 16V COMMON
VVVV303v1
C11-1042023-W08
+PW_VDDCI_M
FB_VDDCI
IN
12
NS800 SENSE POINT
XXXV303v1
<New PN>
VDDCI_FB_TRACE
R800 0R 5% COMMON
VVVV303v1
R11-0000013-W08
VDDCI_SV
C813 3300pF 25V COMMON
VVVV303v1
C11-3322012-W08
R811 1K 1% COMMON
VVVV303v1
R11-0102T12-W08
R813 470 5% COMMON
VVVV303v1
R11-0471T12-W08
VDDCI_VREF
PLACE R1 AND R4 CLOSE TO
PWM AND ROUTED WITH
SEPARATE 20mil TRACE TO
THE ASIC
U801
BOOT
UGATE
GND
LGATE
GND
GND
PHASE
COMP
FB
VCC
GND
GND
+VDDCI_B
+PW_VDDCI_HGD
R816 2K 5% COMMON
R815 3.8K 1% DNI
+PW_VDDCI_LGD
VVVV303v1
R11-3802T12-W08
XXXV303v1
<New PN>
COMMON
VVVV303v1
I32-5725202-N03
+PW_VDDCI_M
VDDCI_COMP_EN
VDDCI_VREF
+VDDCI_VCC
IN
IN
20
18,20
C803 0.22uF 25V DNI
XXXV303v1
C11-2242624-W08
+VDDCI_VIN
Change to +VDDCI_VIN
Change to 0805
C860 0.15uF 16V COMMON
VVVV303v1
C11-1542513-W08
C861 10uF 10V COMMON
VVVV303v1
C11-1067514-T04
C862 10uF 16V COMMON
VVVV303v1
C11-1067514-T04
MIRRORED ON PCB
INPUT MLCC
C865 270uF 16V COMMON
VVVV303v1
C71-27116X1-F70
INPUT BULK CAPS
+PW_VDDCI_HGD
R841 1R 5% COMMON
VVVV303v1
R11-0000013-W08
+PW_VDDCI_HGDR
Q801 NIKO/PK616BA COMMON
VVVV303v1
D03-616BA0C-N03
+PW_VDDCI_M
TO252 DPAK PKG
+PW_VDDCI_LGD
R843 1R 5% COMMON
VVVV303v1
R11-0000013-W08
+PW_VDDCI_LGDR1
Q803 NIKO/PK632BA COMMON
VVVV303v1
D03-632BA0C-N03
Q804 NIKO/PK632BA DNI
XXXV303v1
<New PN>
+PW_VDDCI_LGDR2
R853 1R 5% DNI
XXXV303v1
<New PN>
VVVV303v1
L04-6888021-L65
L801 COMMON
CH-R68 31A 1.25mohm
CHK_D2_P4_5X6_5
+VDDCI
Rs
R845 2.2R 5% COMMON
VVVV303v1
R11-022A014-W08
Cs
C845 1800nF 25V COMMON
VVVV303v1
C11-1822812-Y01
PLACE Rs AND Cs ACROSS QL
PC SNUBBER VALUES SHOWN ARE
FOR REFERENCE ONLY
TUNING IS REQUIRED
C850 0.1uF 10V COMMON
VVVV303v1
C11-1047412-M09
C853 10uF 6.3V COMMON
VVVV303v1
C11-1067314-M09
OUTPUT MLCC
C854 820uF 2.5V COMMON
VVVV303v1
C71-82102U1-F70
C855 820uF 2.5V DNI
XXXV303v1
C71-82102U1-F70
OUTPUT BULK CAPS

MSI

MICRO-STAR INT'L CO.,LTD

MS-V303

Size	Document Description	Rev
Custom	17 VDDCI	1.0

Date: Thursday, August 01, 2013 Sheet 17 of 24

(17) MVDD

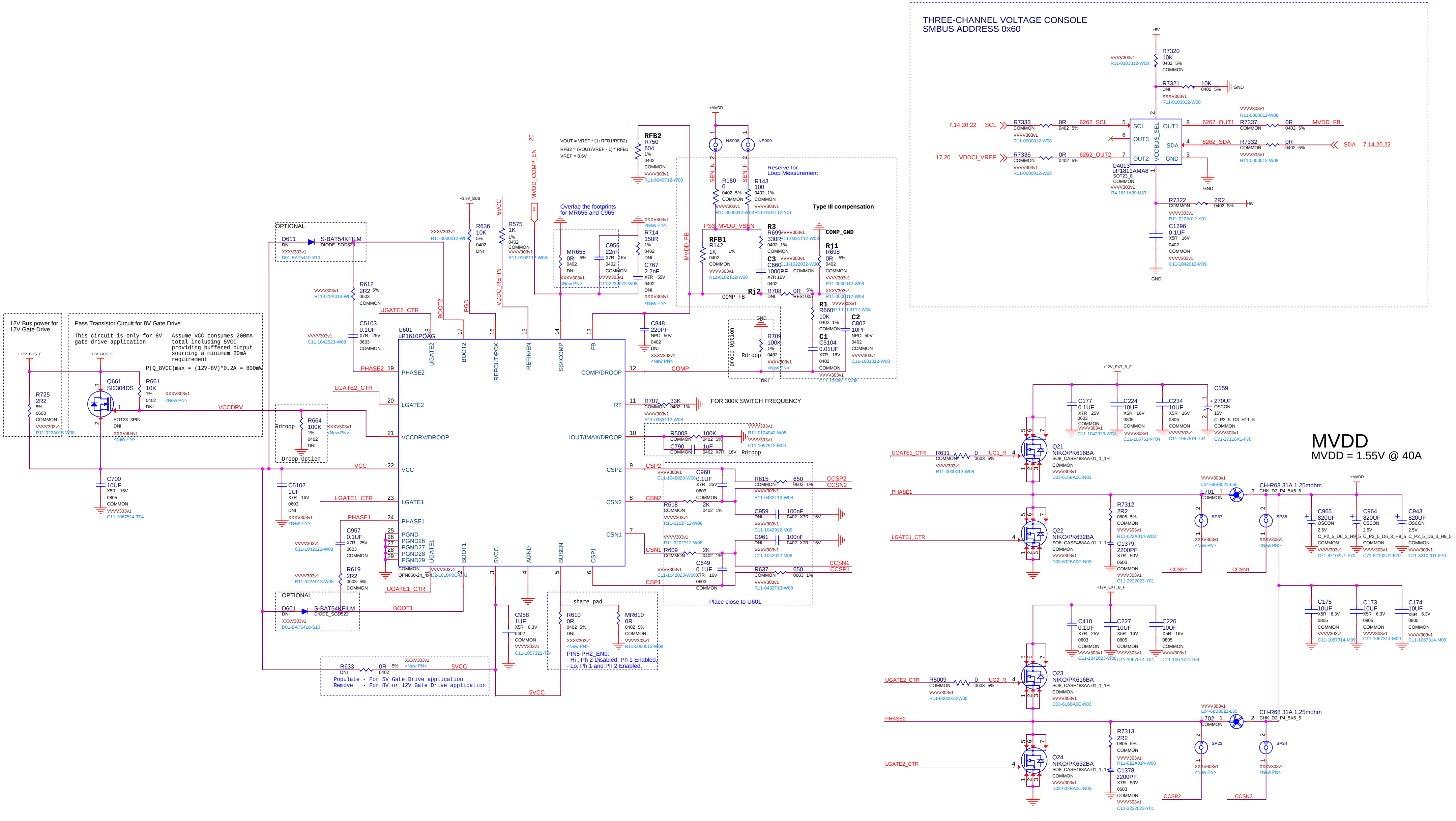
THREE-CHANNEL VOLTAGE CONSOLE
SMBUS ADDRESS 0x60
U4013
uP1811AMA8
SOT23_8
SCL
OUT3
OUT2
OUT1
SDA
GND
VCCBUS_SEL
R7320 10K
R7321 DNI 10K
R7333 0R
R7336 0R
R7337 0R
R7332 0R
R7322 2R2
C1296 0.1UF
6262_SCL
6262_OUT2
6262_OUT1
6262_SDA
MVDD_FB
7,14,20,22 SCL
17,20 VDDCI_VREF
SDA 7,14,20,22
+5V
GND
U601
uP1610PQAG
QFN050-24_4X4
PHASE2
LGATE2
VCCDRV/DROOP
VCC
LGATE1
PHASE1
PGND
PGND26
PGND27
PGND28
PGND29
UGATE2
BOOT2
REFOUT/POK
REFIN/EN
SS/ICOMP
FB
COMP/DROOP
RT
IOUT/IMAX/DROOP
CSP2
CSN2
CSN1
UGATE1
BOOT1
5VCC
AGND
BUSEN
CSP1
D611 S-BAT54KFILM
D601 S-BAT54KFILM
Q661 SI2304DS
R725 2R2
R661 10K
R664 100K
C700 10UF
C5102 1UF
C5103 0.1UF
R612 2R2
C957 0.1UF
R619 2R2
R633 0R
R636 10K
R575 1K
MR655 0R
C956 22nF
R714 150R
C767 2.2nF
RFB2 R750 604
RFB1 R142 1K
R3 R699 330R
C3 C660 1000PF
Rj1 R698 0R
Rj2 R708 0R
R1 R660 10K
C1 C5104 0.01UF
C2 C802 10PF
R180 0
R143 100
NS908
NS909
C848 220PF
R709 100K
R707 33K
R5008 100K
C790 1uF
C960 0.1UF
R618 2K
R615 650
C959 100nF
C961 100nF
R609 2K
C649 0.1UF
R637 650
C958 1UF
R610 0R
MR610 0R
Q21 NIKO/PK616BA
Q22 NIKO/PK632BA
Q23 NIKO/PK616BA
Q24 NIKO/PK632BA
R631 0
R5009 0
R7312 2R2
R7313 2R2
C1379 2200PF
C1378 2200PF
C177 0.1UF
C224 10UF
C234 10UF
C159 270UF
C410 0.1UF
C227 10UF
C226 10UF
L701
L702
CH-R68 31A 1.25mohm
SP37
SP38
SP23
SP24
C965 820UF
C964 820UF
C943 820UF
C175 10UF
C173 10UF
C174 10UF
+12V_EXT_B_F
+12V_BUS_F
+3.3V_BUS
+MVDD
VCCDRV
UGATE1_CTR
UGATE2_CTR
LGATE1_CTR
LGATE2_CTR
CCSP1
CCSN1
CCSP2
CCSN2
PS3_MVDD_VSEN
COMP_FB
COMP
MVDD_COMP_EN
VDDC_REFIN
PGD
SEN_N
SEN_F

12V Bus power for 12V Gate Drive

Pass Transistor Circuit for 8V Gate Drive

This circuit is only for 8V gate drive application

Assume VCC consumes 200mA total including 5VCC providing buffered output sourcing a minimum 20mA requirement

P(Q_8VCC)max = (12V-8V)*0.2A = 800mW

OPTIONAL

Droop Option

VOUT = VREF * (1+RFB1/RFB2)
RFB2 = (VOUT/VREF - 1) * RFB1
VREF = 0.6V

Overlap the footprints for MR655 and C965

Reserve for Loop Measurement

Type III compensation

COMP_GND

FOR 300K SWITCH FREQUENCY

Place close to U601

share pad

PIN5 PH2_ENb:
- Hi , Ph 2 Disabled, Ph 1 Enabled,
- Lo, Ph 1 and Ph 2 Enabled,

Populate - For 5V Gate Drive application
Remove - For 8V or 12V Gate Drive application

MVDD
MVDD = 1.55V @ 40A

MICRO-STAR INT'L CO.,LTD

MS-V303

Size	Document Description	Rev
Custom	18 MVDD	1.0

Date: Thursday, August 01, 2013 Sheet 18 of 24

(18) SMALL RAIL REGULATOR

LDO #1: VIN = 3.0V TO 3.6V MAX VOUT = +1.8V +/- 2% IOUT = 1.3A RMS MAX

PCB: 50 TO 70mm SQ. COPPER AREA FOR COOLING

REGULATOR FOR +5V RAILS

IOUT MAX = 150mA

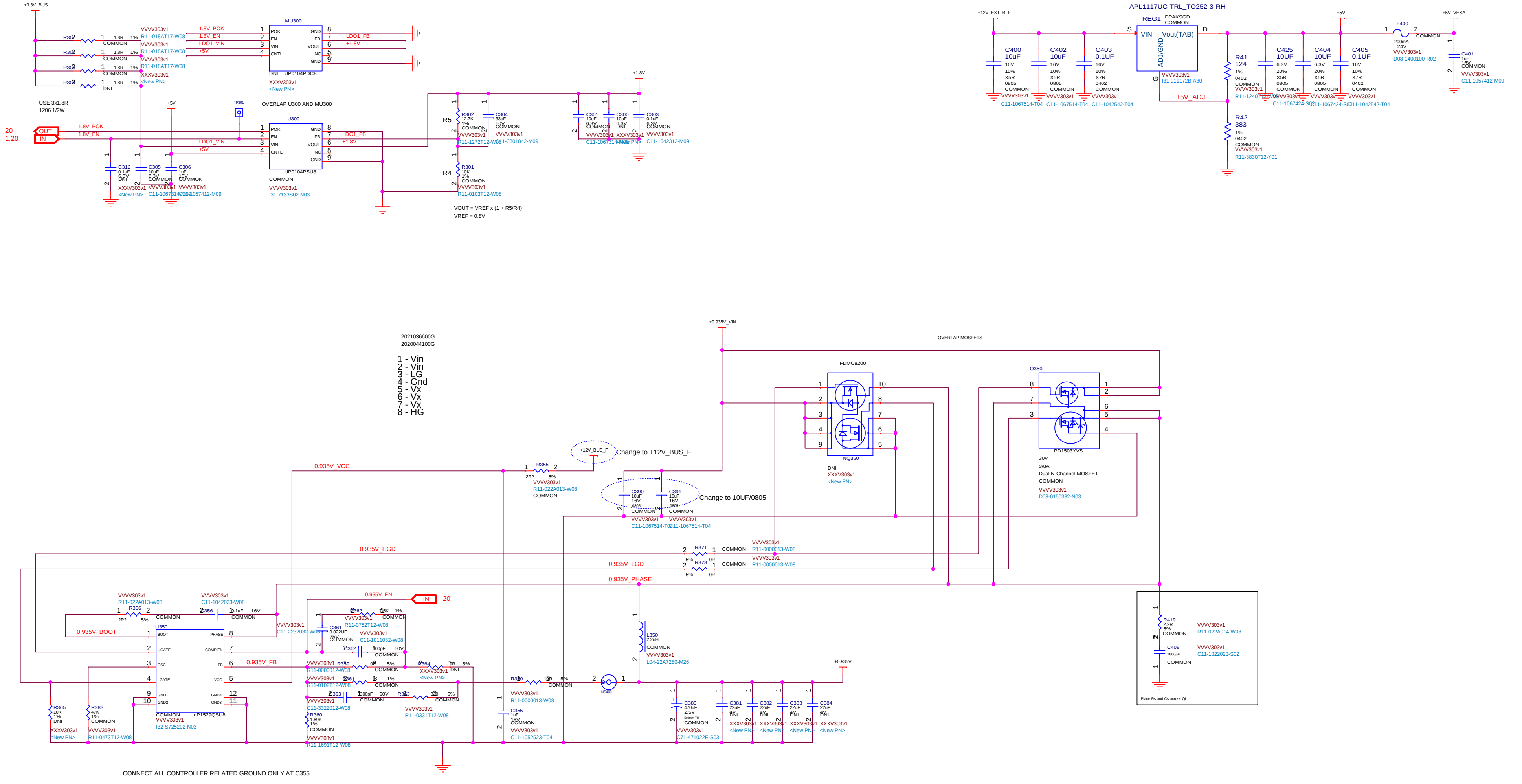
+3.3V_BUS
R302 1.8R 1% COMMON
R303 1.8R 1% COMMON
R305 1.8R 1% COMMON
R304 1.8R 1% DNI
VVVV303v1 R11-018AT17-W08
XXXV303v1 <New PN>
1.8V_POK
1.8V_EN
LDO1_VIN
+5V
MU300
POK EN VIN CNTL GND FB VOUT NC GND
LDO1_FB
+1.8V
DNI UP0104PDC8
XXXV303v1 <New PN>
USE 3x1.8R
1206 1/2W
TP301
OVERLAP U300 AND MU300
U300
UP0104PSU8
COMMON
VVVV303v1 I31-7133S02-N03
20
1,20
OUT
IN
C312 0.1uF 6.3V DNI XXXV303v1 <New PN>
C305 10uF 6.3V COMMON VVVV303v1 C11-1067314-M09
C306 1uF 10V COMMON VVVV303v1 C11-1057412-M09
R5 R302 12.7K 1% COMMON VVVV303v1 R11-1272T12-W08
C304 33pF 50V COMMON VVVV303v1 C11-3301842-M09
R4 R301 10K 1% COMMON VVVV303v1 R11-0103T12-W08
VOUT = VREF x (1 + R5/R4)
VREF = 0.8V
+1.8V
C301 10uF 6.3V COMMON VVVV303v1 C11-1067314-M09
C300 10uF 6.3V DNI XXXV303v1 <New PN>
C303 0.1uF 6.3V COMMON VVVV303v1 C11-1042312-M09
+12V_EXT_B_F
C400 10uF 16V 10% X5R 0805 COMMON VVVV303v1 C11-1067514-T04
C402 10uF 16V 10% X5R 0805 COMMON VVVV303v1 C11-1067514-T04
C403 0.1UF 16V 10% X7R 0402 COMMON VVVV303v1 C11-1042542-T04
APL1117UC-TRL_TO252-3-RH
REG1 DPAKSGD COMMON
S VIN Vout(TAB) D ADJ/GND G
VVVV303v1 I31-011172B-A30
+5V_ADJ
R41 124 1% 0402 COMMON VVVV303v1 R11-1240T12-W08
R42 383 1% 0402 COMMON VVVV303v1 R11-3830T12-Y01
C425 10UF 6.3V 20% X5R 0805 COMMON VVVV303v1 C11-1067424-S02
C404 10UF 6.3V 20% X5R 0805 COMMON VVVV303v1 C11-1067424-S02
C405 0.1UF 16V 10% X7R 0402 COMMON VVVV303v1 C11-1042542-T04
+5V
F400 200mA 24V COMMON VVVV303v1 D08-1400100-R02
+5V_VESA
C401 1uF 16V COMMON VVVV303v1 C11-1057412-M09
2021036600G
2020044100G
1 - Vin
2 - Vin
3 - LG
4 - Gnd
5 - Vx
6 - Vx
7 - Vx
8 - HG
+0.935V_VIN
OVERLAP MOSFETS
FDMC8200
NQ350 DNI XXXV303v1 <New PN>
Q350
PD1503YVS
30V
9/8A
Dual N-Channel MOSFET
COMMON
VVVV303v1 D03-0150332-N03
0.935V_VCC
R355 2R2 5% VVVV303v1 R11-022A013-W08 COMMON
+12V_BUS_F
Change to +12V_BUS_F
C390 10uF 16V 0805 COMMON VVVV303v1 C11-1067514-T04
C391 10uF 16V 0805 COMMON VVVV303v1 C11-1067514-T04
Change to 10UF/0805
0.935V_HGD
R371 5% 0R COMMON VVVV303v1 R11-0000013-W08
0.935V_LGD
R373 5% 0R COMMON VVVV303v1 R11-0000013-W08
0.935V_PHASE
0.935V_EN
IN
20
R356 2R2 5% COMMON VVVV303v1 R11-022A013-W08
C356 0.1uF 16V COMMON VVVV303v1 C11-1042023-W08
0.935V_BOOT
U350
BOOT UGATE OSC LGATE GND1 GND2 PHASE COMP/EN FB VCC GND4 GND3
COMMON uP1529QSU8
VVVV303v1 I32-S725202-N03
0.935V_FB
C361 0.022UF 25V COMMON VVVV303v1 C11-2232032-W08
R362 7.5K 1% COMMON VVVV303v1 R11-0752T12-W08
C362 100pF 50V COMMON VVVV303v1 C11-1011032-W08
R359 0R 5% COMMON VVVV303v1 R11-0000012-W08
R364 0R 5% DNI XXXV303v1 <New PN>
R361 1K 1% COMMON VVVV303v1 R11-0102T12-W08
C363 3300pF 50V COMMON VVVV303v1 C11-3322012-W08
R363 330 5% COMMON VVVV303v1 R11-0331T12-W08
R360 1.69K 1% COMMON VVVV303v1 R11-1691T12-W08
R365 10K 1% DNI XXXV303v1 <New PN>
R383 47K 1% COMMON VVVV303v1 R11-0473T12-W08
R350 12R 5% COMMON VVVV303v1 R11-0000013-W08
C355 1uF 16V COMMON VVVV303v1 C11-1052523-T04
NS400
L350 2.2uH COMMON VVVV303v1 L04-22A7280-M26
+0.935V
C380 470uF 2.5V 5x9mm TH COMMON VVVV303v1 C71-471022E-S03
C381 22uF 4V DNI XXXV303v1 <New PN>
C382 22uF 4V DNI XXXV303v1 <New PN>
C383 22uF 4V DNI XXXV303v1 <New PN>
C384 22uF 4V DNI XXXV303v1 <New PN>
R419 2.2R 5% COMMON VVVV303v1 R11-022A014-W08
C408 1800pF COMMON VVVV303v1 C11-1822023-S02
Place Rs and Cs across QL
CONNECT ALL CONTROLLER RELATED GROUND ONLY AT C355

MICRO-STAR INT'L CO.,LTD

MS-V303

Size Custom

Document Description 19 SMALL RAIL REGULATORS

Rev 1.0

Date: Thursday, August 01, 2013 Sheet 19 of 24

(19) POWER MANAGEMENT

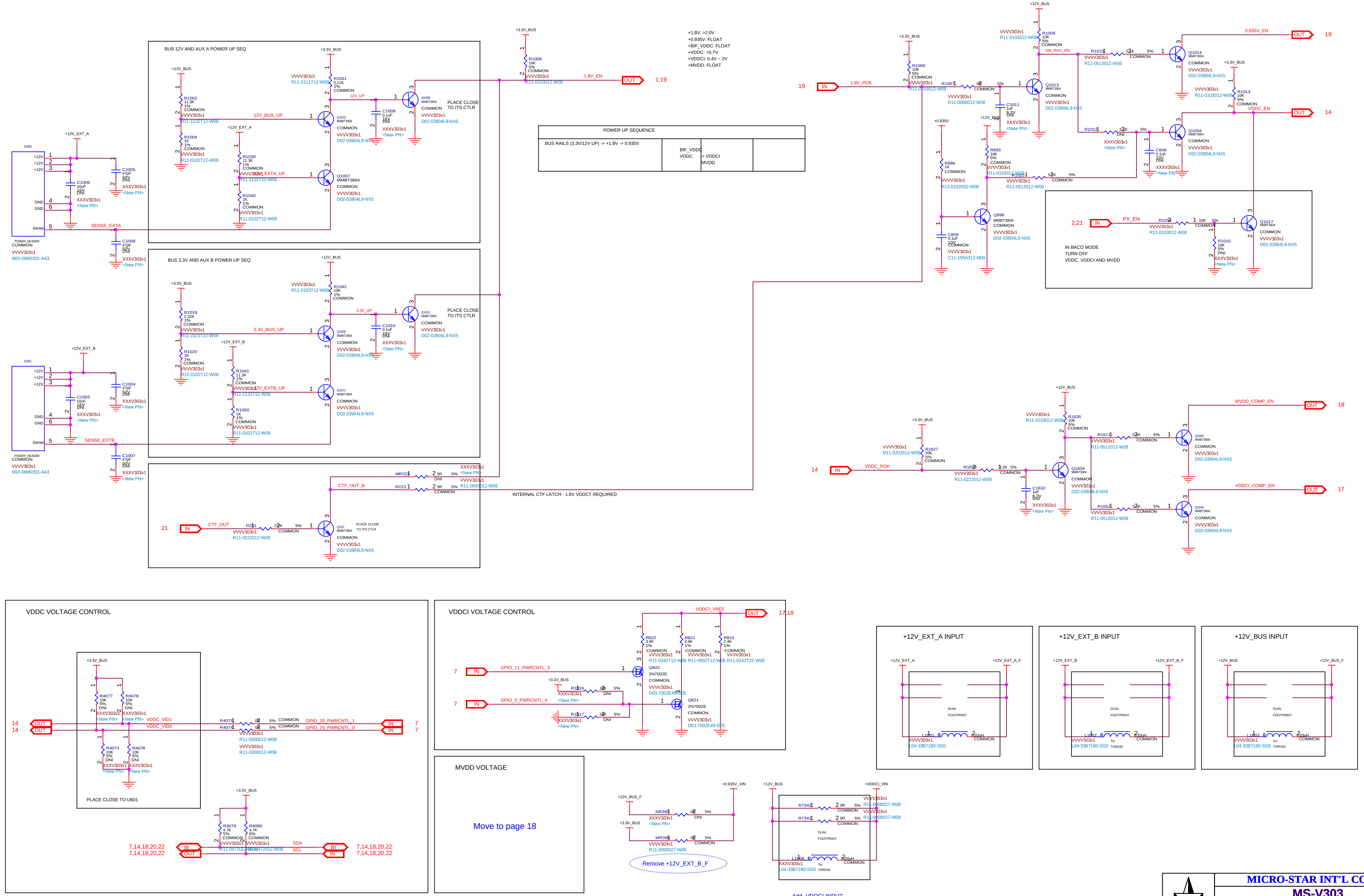
BUS 12V AND AUX A POWER UP SEQ
+12V_BUS
+3.3V_BUS
+12V_EXT_A
J1000
POWER_HEADER
COMMON
VVVV303v1
N93-06M0301-A43
+12V
GND
Sense
SENSE_EXTA
R1002 11.3K 1%
R1004 1K 1%
R1030 11.3K 1%
R1040 1K 1%
R1031 5.11K 1%
R11-5111T12-W08
R11-1132T12-W08
R11-0102T12-W08
12V_BUS_UP
12V_EXTA_UP
12V_UP
Q1010 MMBT3904
Q1007 MMBT3904
Q1008 MMBT3904
D02-03904L9-NX5
C1005 47pF 50V DNI
C1006 10uF 16V DNI
C1008 47pF 50V DNI
C1009 0.1uF 16V DNI
XXXV303v1
<New PN>
PLACE CLOSE TO ITS CTLR
BUS 3.3V AND AUX B POWER UP SEQ
+12V_EXT_B
J1001
SENSE_EXTB
R1019 2.32K 1%
R11-2321T22-W08
R1020 1K 1%
R1041 11.3K 1%
R1050 1K 1%
R1042 10K 1%
R11-0103T12-W08
3.3V_BUS_UP
12V_EXTB_UP
3.3V_UP
Q1009 MMBT3904
Q1011 MMBT3904
Q1012 MMBT3904
C1003 10uF 16V DNI
C1004 47pF 50V DNI
C1007 47pF 50V DNI
C1010 0.1uF 16V DNI
21
IN
CTF_OUT
R221 22K 5%
R11-0222012-W08
Q210 MMBT3904
CTF_OUT_B
MR223 0R 5% DNI
R223 0R 5%
R11-0000012-W08
INTERNAL CTF LATCH - 1.8V VDDCT REQUIRED
R1008 10K 5%
R11-0103012-W08
1.8V_EN
OUT
1,19
+1.8V: >2.0V
+0.935V: FLOAT
+BIF_VDDC: FLOAT
+VDDC: >0.7V
+VDDCI: 0.4V ~ 2V
+MVDD: FLOAT
POWER UP SEQUENCE
BUS RAILS (3.3V/12V UP) -> +1.8V -> 0.935V
BIF_VDDC
VDDC
-> VDDCI
MVDD
19
1.8V_POK
R1006 10K 5%
R1007 0R 5%
R11-0000012-W08
C1011 1uF 6.3V DNI
R1009 10K 5%
SM_RAIL_EN
Q1013 MMBT3904
R1010 5.2K 5%
R11-0512012-W08
Q1014 MMBT3904
0.935V_EN
R1013 10K 5%
VDDC_EN
14
R1012 5.2K DNI
C849 0.1uF 10V DNI
Q1016 MMBT3904
+0.935V
R896 1K
R11-0102032-W08
R893 10K 5%
R1022 5.2K 5%
Q898 MMBT3904
C859 0.1uF 10V
C11-105A312-M09
2,21
PX_EN
R1014 10K 5%
R1015 10K 5% DNI
Q1017 MMBT3904
IN BACO MODE
TURN OFF
VDDC, VDDCI AND MVDD
VDDC_POK
R1627 20K 5%
R11-0203012-W08
R1693 2.2K 5%
C1632 1uF 6.3V DNI
Q1604 MMBT3904
R1635 10K 5%
R1611 5.2K 5%
Q1605 MMBT3904
MVDD_COMP_EN
18
R1652 5.2K 5%
Q1630 MMBT3904
VDDCI_COMP_EN
17
VDDC VOLTAGE CONTROL
R4077 10K 5% DNI
R4076 10K 5% DNI
R4073 10K 5% DNI
R4078 10K 5% DNI
VDDC_VID1
VDDC_VID0
R4075 0R 5%
R4074 0R 5%
GPIO_20_PWRCNTL_1
GPIO_15_PWRCNTL_0
7
PLACE CLOSE TO U601
R4079 4.7K 5%
R4080 4.7K 5%
R11-0472012-W08
SDA
SCL
BI
7,14,18,20,22
VDDCI VOLTAGE CONTROL
VDDCI_VREF
17,18
R822 3.4K 1%
R11-0342T12-W08
R821 5.9K 1%
R11-0592T12-W08
R810 2.4K 1%
R11-0242T22-W08
GPIO_11_PWRCNTL_3
Q822 2N7002E
D03-7002E49-O05
GPIO_0_PWRCNTL_4
R1116 12K 5% DNI
R1117 12K 5% DNI
Q821 2N7002E
MVDD VOLTAGE
Move to page 18
+12V_BUS_F
+0.935V_VIN
NR390 0R 5% DNI
MR390 0R 5%
R11-0000027-W08
Remove +12V_EXT_B_F
+VDDCI_VIN
R7342 0R 5%
R7341 0R 5%
DUAL FOOTPRINT
L1506 0.33uH
TH TOROID
L04-33B7180-SG0
Add VDDCI INPUT
+12V_EXT_A INPUT
+12V_EXT_A_F
L1601 0.33uH
+12V_EXT_B INPUT
+12V_EXT_B_F
L1602 0.33uH
+12V_BUS INPUT
L1603 0.33uH

MICRO-STAR INT'L CO.,LTD

MS-V303

Size	Document Description	Rev
Custom	20 POWER MANAGEMENT	1.0

Date: Thursday, August 01, 2013 | Sheet 20 of 24

(20) MECH AND THERM MANAGEMENT

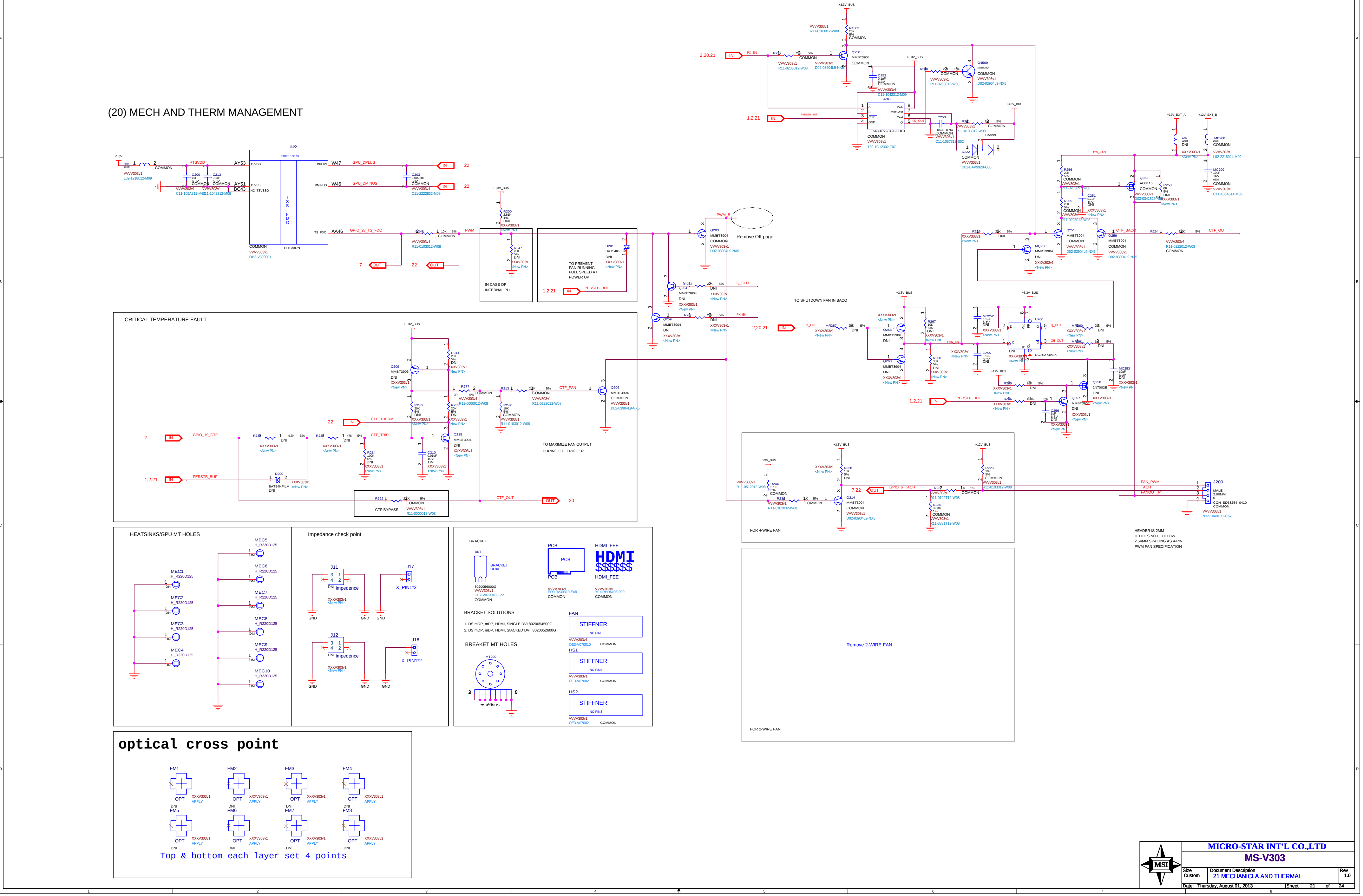
U1Q
PART 18 OF 18
TSVDD
TSVSS
NC_TSVSSQ
DPLUS
DMINUS
TS_FDO
TSS FDO
PITCAIRN
COMMON
VVVV303v1
OB3-V303001
+1.8V
B202
120R
COMMON
VVVV303v1
L02-1218012-M09
+TSVDD
AY53
AY51
BC43
C200
1uF
6.3V
C213
0.1uF
6.3V
C11-105A312-M09
C11-1042312-M09
W47
GPU_DPLUS
W46
GPU_DMINUS
AA46
GPIO_28_TS_FDO
C203
0.0022uF
50V
C11-2222832-M09
IN
22
R248
10K
5%
R11-0103012-W08
PWM
OUT
7
+3.3V_BUS
R200
2.61K
1%
DNI
XXXV303v1
<New PN>
R247
20K
5%
IN CASE OF INTERNAL PU
D201
BAT54KFILM
TO PREVENT FAN RUNNING FULL SPEED AT POWER UP
1,2,21
PERSTB_BUF
PWM_B
Q203
MMBT3904
D02-03904L9-NX5
Remove Off-page
Q254
R213
Q_OUT
Q259
R218
PX_EN
2,20,21
R4502
20K
R11-0203012-W08
R217
Q250
C252
0.1uF
C11-1042312-M09
U201
A
B
CLR
GND
VCC
Rext/Cext
Cext
Q
SN74LVC1G123DCT
T39-1G12302-T07
Q2_OUT
C253
10uF 6.3V
C11-1067313-S02
R211
R11-0105012-W08
BAV99
D222
D01-BAV9929-O05
R210
Q4509
MMBT3904
+12V_EXT_A
+12V_EXT_B
B200
220R
MB200
L02-2218024-M09
MC209
10uF
16V
0805
C11-106A514-M09
12V_FAN
R256
R255
C251
0.1uF
10V
Q252
AO3415L
D03-0341529-A0
R253
0R
R259
Q251
Q256
CTF_BACO
R264
R11-0222012-W08
CTF_OUT
MQ250
TO SHUTDOWN FAN IN BACO
MR257
Q253
MMBT3906
R267
10K
Q260
R258
33K
FAN_EN
MC252
C255
U200
D
C
Vcc
PR
G
CL
NC7SZ74K8X
QB_OUT
MR260
MR261
MC253
+12V_BUS
R215
Q258
2N7002E
R216
10K
Q257
C256
1uF
CRITICAL TEMPERATURE FAULT
Q209
R241
20K
R277
0R
R11-0000012-W08
R213
CTF_FAN
Q206
R240
R233
R242
R11-0103012-W08
CTF_THERM
GPIO_19_CTF
R230
4.7K
R231
47K
CTF_TRIP
Q215
R214
100K
C210
0.01uF
D200
BAT54KFILM
R222
CTF BYPASS
20
TO MAXIMIZE FAN OUTPUT
DURING CTF TRIGGER
R228
R244
5.1K
R11-0512012-W08
R232
R11-0102032-W08
Q214
7,22
GPIO_6_TACH
R234
R11-0102T12-W08
R235
3.83K
R11-3831T12-W08
R229
R11-0103012-W08
FOR 4-WIRE FAN
FAN_PWM
TACH
FANOUT_P
J200
MALE
2.00MM
CON_SD53254_0410
N32-1040D71-C67
HEADER IS 2MM
IT DOES NOT FOLLOW
2.54MM SPACING AS 4-PIN
PWM FAN SPECIFICATION
Remove 2-WIRE FAN
FOR 2-WIRE FAN
HEATSINKS/GPU MT HOLES
MEC1
MEC2
MEC3
MEC4
MEC5
MEC6
MEC7
MEC8
MEC9
MEC10
H_R220D125
Impedance check point
J11
J12
impedence
J17
J16
X_PIN1*2
GND
BRACKET
BKT
BRACKET DUAL
8020056000G
OE2-V070010-C22
PCB
PD0-0V30310-E48
HDMI_FEE
HDMI
Y01-RHDMI03-000
BRACKET SOLUTIONS
1. DS mDP, mDP, HDMI, SINGLE DVI 8020054500G
2. DS mDP, mDP, HDMI, StACKED DVI 8020052600G
BREAKET MT HOLES
MT200
FAN
HS1
HS2
STIFFNER
NO PINS
OE3-V070010
OE3-V07002
optical cross point
FM1
FM2
FM3
FM4
FM5
FM6
FM7
FM8
OPT
APPLY
Top & bottom each layer set 4 points

MICRO-STAR INT'L CO.,LTD

MS-V303

Size Custom | Document Description 21 MECHANICLA AND THERMAL | Rev 1.0

Date: Thursday, August 01, 2013 | Sheet 21 of 24

(21) DEBUG CIRCUIT

JTAG

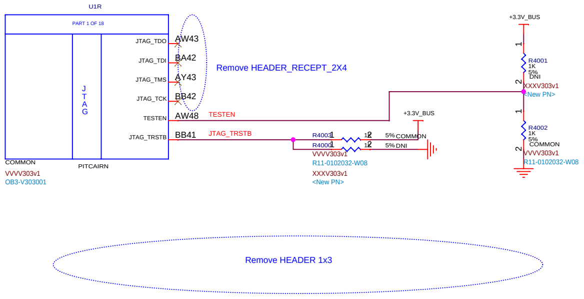
U1R
PART 1 OF 18
J T A G
JTAG_TDO AW43
JTAG_TDI BA42
JTAG_TMS AY43
JTAG_TCK BB42
TESTEN AW48
JTAG_TRSTB BB41
COMMON
PITCAIRN
VVVV303v1
OB3-V303001
Remove HEADER_RECEPT_2X4
TESTEN
JTAG_TRSTB
R4003 1 2 5% COMMON
R4000 1 2 5% DNI
VVVV303v1
R11-0102032-W08
XXXV303v1
<New PN>
+3.3V_BUS
+3.3V_BUS
R4001 1K 5% DNI
XXXV303v1
<New PN>
R4002 1K 5% COMMON
VVVV303v1
R11-0102032-W08
Remove HEADER 1x3

LM96163 FOR BACKUP THERMAL CONTROL

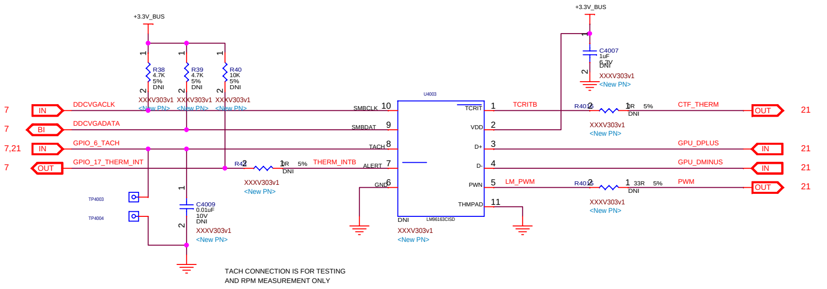
+3.3V_BUS
R38 4.7K 5% DNI
R39 4.7K 5% DNI
R40 10K 5% DNI
XXXV303v1 <New PN>
XXXV303v1 <New PN>
XXXV303v1 <New PN>
7 IN DDCVGACLK
7 BI DDCVGADATA
7,21 IN GPIO_6_TACH
7 OUT GPIO_17_THERM_INT
TP4003
TP4004
R42 2 1 0R 5% DNI THERM_INTB
XXXV303v1 <New PN>
C4009 0.01uF 10V DNI
XXXV303v1 <New PN>
U4003
SMBCLK 10
SMBDAT 9
TACH 8
ALERT 7
GND 6
TCRIT 1
VDD 2
D+ 3
D- 4
PWN 5
THMPAD 11
DNI LM96163CISD
XXXV303v1 <New PN>
+3.3V_BUS
C4007 1uF 6.3V DNI
XXXV303v1 <New PN>
TCRITB
R4016 2 1 0R 5% DNI
XXXV303v1 <New PN>
CTF_THERM OUT 21
GPU_DPLUS IN 21
GPU_DMINUS IN 21
LM_PWM
R4015 2 1 33R 5% DNI
XXXV303v1 <New PN>
PWM OUT 21

TACH CONNECTION IS FOR TESTING
AND RPM MEASUREMENT ONLY

SWITCH CONNECTIONS TO PINSTRAPS

Remove

I2C ACCESS POINTS FOR VDDC CONTROLLER

Remove

Remove

LED LIGHTS

Remove

Thermal IC

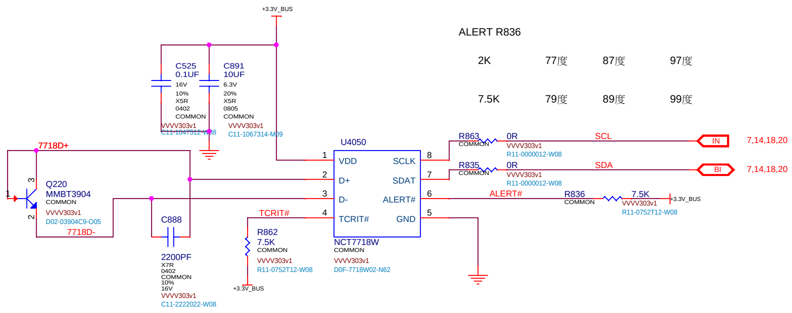
+3.3V_BUS
C525 0.1UF 16V 10% X5R 0402 COMMON
VVVV303v1
C11-1047512-W08
C891 10UF 6.3V 20% X5R 0805 COMMON
VVVV303v1
C11-1067314-M09
7718D+
Q220 MMBT3904 COMMON
VVVV303v1
D02-03904C9-O05
7718D-
C888 2200PF X7R 0402 COMMON 10% 16V
VVVV303v1
C11-2222022-W08
TCRIT#
R862 7.5K COMMON
VVVV303v1
R11-0752T12-W08
+3.3V_BUS
U4050
1 VDD
2 D+
3 D-
4 TCRIT#
8 SCLK
7 SDAT
6 ALERT#
5 GND
NCT7718W COMMON
VVVV303v1
D0F-7718W02-N62
R863 COMMON 0R
VVVV303v1
R11-0000012-W08
SCL IN 7,14,18,20
R835 COMMON 0R
VVVV303v1
R11-0000012-W08
SDA BI 7,14,18,20
ALERT#
R836 COMMON 7.5K
VVVV303v1
R11-0752T12-W08
+3.3V_BUS

TCRIT R862

ALERT R836	2K	7.5.K	10.5K
2K	77度	87度	97度
7.5K	79度	89度	99度

V-Check Point

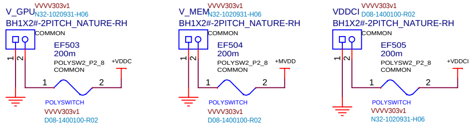
V_GPU
VVVV303v1
N32-1020931-H06
BH1X2#-2PITCH_NATURE-RH
COMMON
EF503 200m
POLYSW2_P2_8 COMMON
+VDDC
POLYSWITCH
VVVV303v1
D08-1400100-R02
V_MEM
VVVV303v1
N32-1020931-H06
BH1X2#-2PITCH_NATURE-RH
COMMON
EF504 200m
POLYSW2_P2_8 COMMON
+MVDD
POLYSWITCH
VVVV303v1
D08-1400100-R02
VDDCI
VVVV303v1
D08-1400100-R02
BH1X2#-2PITCH_NATURE-RH
COMMON
EF505 200m
POLYSW2_P2_8 COMMON
+VDDCI
POLYSWITCH
VVVV303v1
N32-1020931-H06

MICRO-STAR INT'L CO.,LTD

MS-V303

Size	Document Description	Rev
Custom	22 DEBUG CIRCUITS	1.0

Date: Thursday, August 01, 2013 Sheet 22 of 24

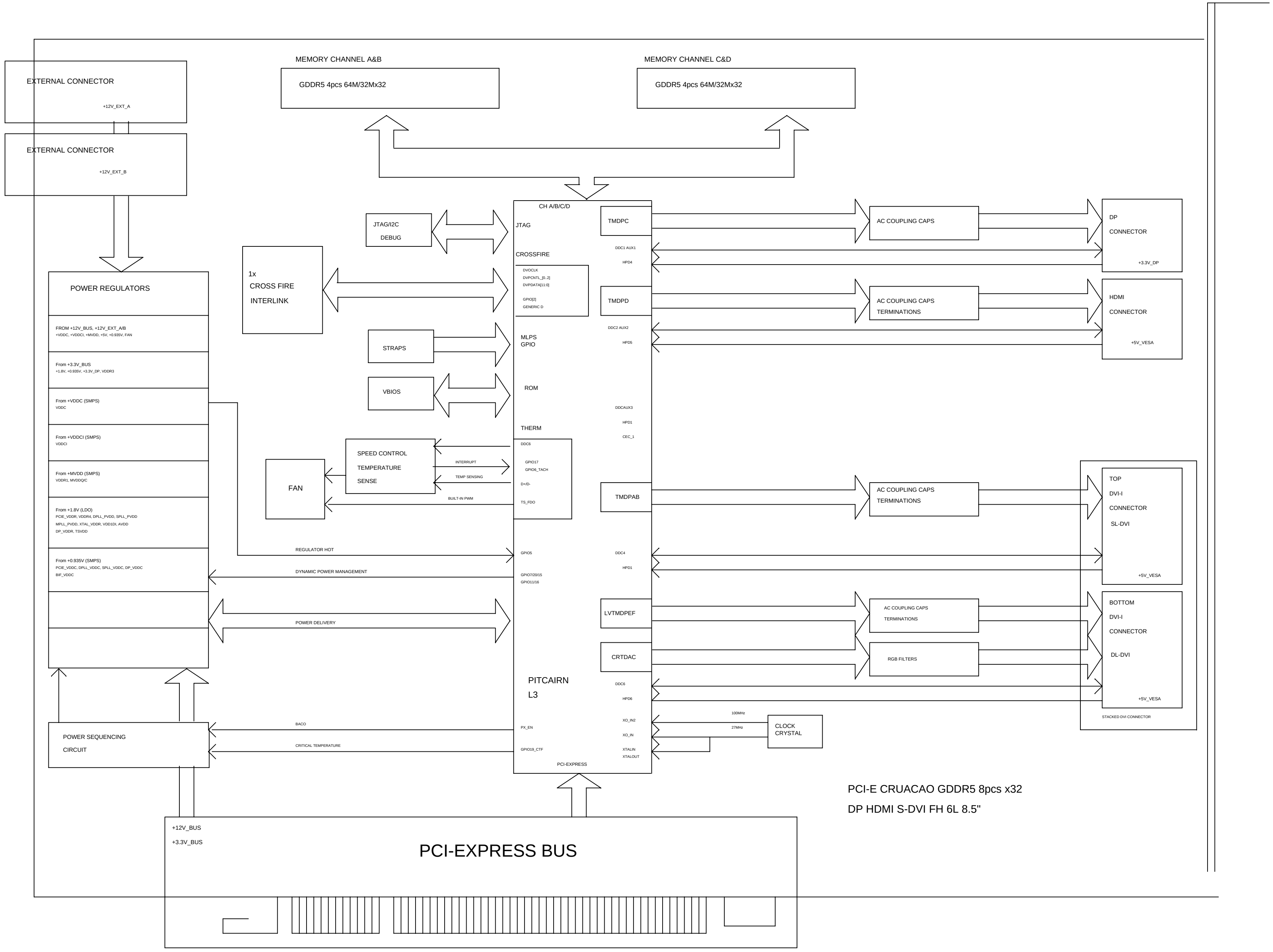
EXTERNAL CONNECTOR
+12V_EXT_A
EXTERNAL CONNECTOR
+12V_EXT_B
MEMORY CHANNEL A&B
GDDR5 4pcs 64M/32Mx32
MEMORY CHANNEL C&D
GDDR5 4pcs 64M/32Mx32
POWER REGULATORS
FROM +12V_BUS, +12V_EXT_A/B
+VDDC, +VDDCI, +MVDD, +5V, +0.935V, FAN
From +3.3V_BUS
+1.8V, +0.935V, +3.3V_DP, VDDR3
From +VDDC (SMPS)
VDDC
From +VDDCI (SMPS)
VDDCI
From +MVDD (SMPS)
VDDR1, MVDDQ/C
From +1.8V (LDO)
PCIE_VDDR, VDDR4, DPLL_PVDD, SPLL_PVDD
MPLL_PVDD, XTAL_VDDR, VDD1DI, AVDD
DP_VDDR, TSVDD
From +0.935V (SMPS)
PCIE_VDDC, DPLL_VDDC, SPLL_VDDC, DP_VDDC
BIF_VDDC
JTAG/I2C
DEBUG
1x
CROSS FIRE
INTERLINK
STRAPS
VBIOS
SPEED CONTROL
TEMPERATURE
SENSE
FAN
INTERRUPT
TEMP SENSING
BUILT-IN PWM
REGULATOR HOT
DYNAMIC POWER MANAGEMENT
POWER DELIVERY
BACO
CRITICAL TEMPERATURE
POWER SEQUENCING
CIRCUIT
CH A/B/C/D
JTAG
CROSSFIRE
DVOCLK
DVPCNTL_[0..2]
DVPDATA[11:0]
GPIO[2]
GENERIC D
MLPS
GPIO
ROM
THERM
DDC6
GPIO17
GPIO6_TACH
D+/D-
TS_FDO
GPIO5
GPIO7/20/15
GPIO11/16
PITCAIRN
L3
PX_EN
GPIO19_CTF
PCI-EXPRESS
TMDPC
DDC1 AUX1
HPD4
TMDPD
DDC2 AUX2
HPD5
DDCAUX3
HPD1
CEC_1
TMDPAB
DDC4
HPD1
LVTMDPEF
CRTDAC
DDC6
HPD6
XO_IN2
XO_IN
XTALIN
XTALOUT
100MHz
27MHz
CLOCK
CRYSTAL
AC COUPLING CAPS
AC COUPLING CAPS
TERMINATIONS
AC COUPLING CAPS
TERMINATIONS
AC COUPLING CAPS
TERMINATIONS
RGB FILTERS
DP
CONNECTOR
+3.3V_DP
HDMI
CONNECTOR
+5V_VESA
TOP
DVI-I
CONNECTOR
SL-DVI
+5V_VESA
BOTTOM
DVI-I
CONNECTOR
DL-DVI
+5V_VESA
STACKED DVI CONNECTOR
+12V_BUS
+3.3V_BUS
PCI-EXPRESS BUS

PCI-E CRUACAO GDDR5 8pcs x32

DP HDMI S-DVI FH 6L 8.5"

MICRO-STAR INT'L CO.,LTD

MS-V303

Size	Document Description	Rev
Custom	23 BLOCK DIAGRAM	1.0

Date: Thursday, August 01, 2013 Sheet 23 of 24

0	00A	12/07/2012	INITIAL SCHEMATIC BASED ON C400
1	00B	30/10/2012	add R688,C98,C99
1	00C	25/12/2012	remove L1720 ~ L1733 remove NC pin for DP_VDDR/DP_VDDC
	00D	19/06/2013	update power sequence to make 0.95V power up before vddc
	V303-1.0	01/08/2013	Page07：Remove GPIO_14_HPD2 off-page Add Dual-BIOS & Switch Page10：Change J2501 footprint and Library Page11：Add optional ESD Protection DIODES Page12：Add C284/C285 (POSCAP) Remove some 1UF/0402 of VDDC Page14：Change VDDC controller to 8228G Page15：Add Driver IR3598 circuit Page16：Add Driver IR3598 circuit Page17：Change L801 footprint Change VDDCI_VIN Page18：Page14：Change MVDD controller to uP1610PQAG Page19：Change +5V circuit Change 0.935V_VCC to +12V_BUS_F Page20：Add R7341/R7342/L1506 Del R1090~R1095 Page21：Remove 2-wire FAN circuit Page22：Remove JTAG pin header Remove SWITCH CONNECTIONS TO PINSTRAPS Remove LED LIGHTS Remove I2C ACCESS POINTS FOR VDDC CONTROLLER Add V-Check Point and Thermal IC

MSI

MICRO-STAR INT'L CO.,LTD

MS-V303

Size: Custom
Document Description: 24 REVISION HISTORY
Rev: 1.0

Date: Thursday, August 01, 2013
Sheet 24 of 24