PG161-A00

TU106 6GB GDDR6, 192b, X16
DVI-D/DP + DP + HDMI

TABLE OF CONTENTS

Page Description

1 Table of Contents
2 Block Diagram
3 PCI Express
4 PCIE RC TERM
5 MEMORY: GPU FB_AB
6 MEMORY: FBA[31:0]
7 MEMORY: FBA[63:32]
8 MEMORY: FBB[31:0]
9 MEMORY: FBB[63:32]
10 MEMORY: GPU FB_CD
11 MEMORY: FBC[31:0]
12 MEMORY: FBC[63:32]
13 MEMORY: FBD[31:0]
14 MEMORY: FBD[63:32]
15 GPU PWR & GND
16 GPU Decoupling
17 GPU Decoupling2
18 IO: IFPAB DVI-D-DL
19 IO: IFPA DP
20 IO: IFPB DP
21 IO: IFPE & IFPF USBC NC
22 IO: IFPC HDMI
23 IO: IFPD DP
24 IO: NVHS Interface and Frame Lock
25 MISC1: Thermal, JTAG, GPIO,STEREO

Page Description

26 MISC2: ROM, XTAL,STRAPS
27 PS: 1V8_AON
28 PS: 5V
29 PS: PEXVDD
30 PS: FBVDDQ
31 PS: FBVDDQ PH2
32 PS: NVVDD Controller
33 PS: NVVDD Controller OVR3i
34 PS: NVVDD Phase 6,4
35 PS: NVVDD Phase 3,5
36 PS: NVVDD Phase 2,1
37 PS: Input Power Balancing Switcher
38 PS: Input, Filtering, and Monitoring
39 PS: STEERING, UPB & HOT-UNPLUG
40 PS: Type-C BuckBoost
41 PD PPC
42 PS: 12V & 3V3_A SWITCHER
43 SEQ: 5V, 1V8, NV3V3 ENABLE
44 SEQ: NV, PEX, FB ENABLE
45 SEQ: VOLTAGE MONITOR
46 SEQ: DISCHARGE
47 SEQ: MISC
48 LOGO LED
49 LED DRIVER & BOOST
50 FAN

Page Description

51 PS: Pre-filter
52 MECH
53 PTC

ASSEMBLY <ASSEMBLY_DESCRIPTION>
PAGE DETAIL Table of Contents

ALL NVIDIA DESIGN SPECIFICATIONS, REFERENCE SPECIFICATIONS, REFERENCE BOARDS, FILES, DRAWINGS, DIAGNOSTICS, LISTS AND OTHER DOCUMENTS OR INFORMATION (TOGETHER AND SEPARATELY, 'MATERIALS') ARE BEING PROVIDED 'AS IS'. THE MATERIALS MAY CONTAIN KNOWN AND UNKNOWN VIOLATIONS OR DEVIATIONS OF INDUSTRY STANDARDS AND SPECIFICATIONS. NVIDIA MAKES NO WARRANTIES, EXPRESSED, IMPLIED, STATUTORY OR OTHERWISE WITH RESPECT TO THE MATERIALS OR OTHERWISE, AND EXPRESSLY DISCLAIMS ALL IMPLIED WARRANTIES INCLUDING, WITHOUT LIMITATION, THE WARRANTIES OF DESIGN, OF NONINFRINGEMENT, MERCHANTABILITY OR FITNESS FOR A PARTICULAR PURPOSE, OR ARISING FROM A COURSE OF DEALING, TRADE USAGE, TRADE PRACTICE, OR INDUSTRY STANDARDS.

RD Center
Colorful Co.,Ltd
深圳市七彩虹科技发展有限公司

Size	Document Number	Rev
Custom	PG161H6-E10	A

Date: Wednesday, October 31, 2018 Sheet 1 of 53

Page2: Block Diagram

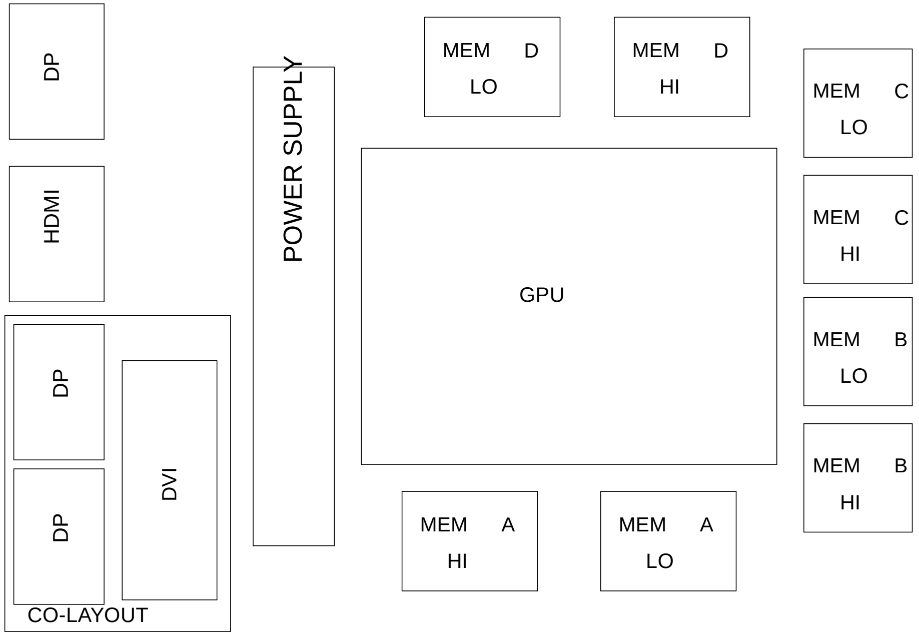
DP
HDMI
DP
DP
DVI
CO-LAYOUT
POWER SUPPLY
MEM D LO
MEM D HI
GPU
MEM A HI
MEM A LO
MEM C LO
MEM C HI
MEM B LO
MEM B HI

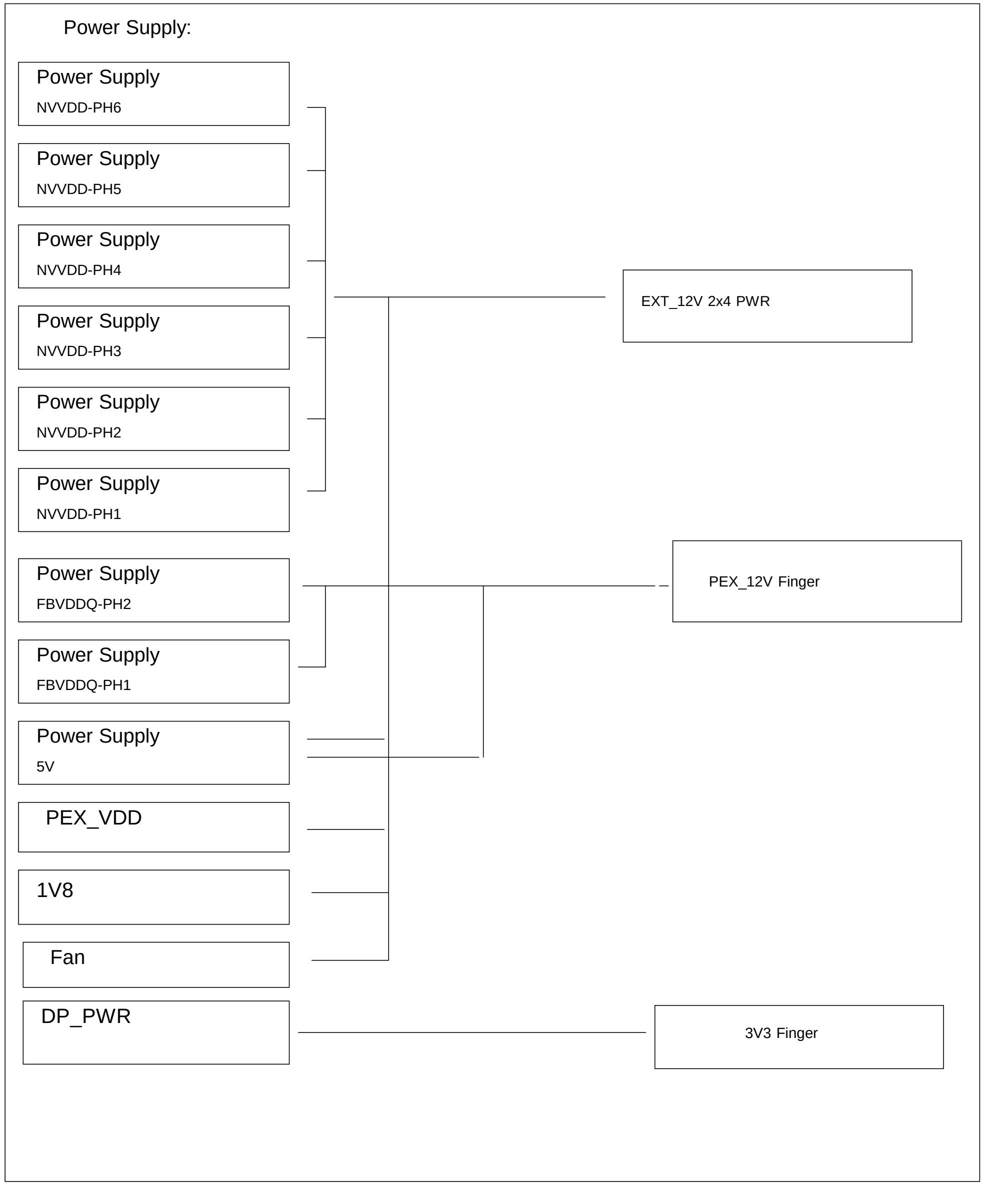
Power Supply:
Power Supply NVVDD-PH6
Power Supply NVVDD-PH5
Power Supply NVVDD-PH4
Power Supply NVVDD-PH3
Power Supply NVVDD-PH2
Power Supply NVVDD-PH1
Power Supply FBVDDQ-PH2
Power Supply FBVDDQ-PH1
Power Supply 5V
PEX_VDD
1V8
Fan
DP_PWR
EXT_12V 2x4 PWR
PEX_12V Finger
3V3 Finger

ASSEMBLY	<ASSEMBLY_DESCRIPTION>
PAGE DETAIL	Block Diagram

ALL NVIDIA DESIGN SPECIFICATIONS, REFERENCE SPECIFICATIONS, REFERENCE BOARDS, FILES, DRAWINGS, DIAGNOSTICS, LISTS AND OTHER DOCUMENTS OR INFORMATION (TOGETHER AND SEPARATELY, 'MATERIALS') ARE BEING PROVIDED 'AS IS'. THE MATERIALS MAY CONTAIN KNOWN AND UNKNOWN VIOLATIONS OR DEVIATIONS OF INDUSTRY STANDARDS AND SPECIFICATIONS. NVIDIA MAKES NO WARRANTIES, EXPRESSED, IMPLIED, STATUTORY OR OTHERWISE WITH RESPECT TO THE MATERIALS OR OTHERWISE, AND EXPRESSLY DISCLAIMS ALL IMPLIED WARRANTIES INCLUDING, WITHOUT LIMITATION, THE WARRANTIES OF DESIGN, OF NONINFRINGEMENT, MERCHANTABILITY OR FITNESS FOR A PARTICULAR PURPOSE, OR ARISING FROM A COURSE OF DEALING, TRADE USAGE, TRADE PRACTICE, OR INDUSTRY STANDARDS.

RD Center
Colorful Co.,Ltd
深圳市七彩虹科技发展有限公司

Size	Document Number	Rev
Custom	PG161H6-E10	A

Date: Wednesday, October 31, 2018 Sheet 2 of 53

Page3: PCI Express

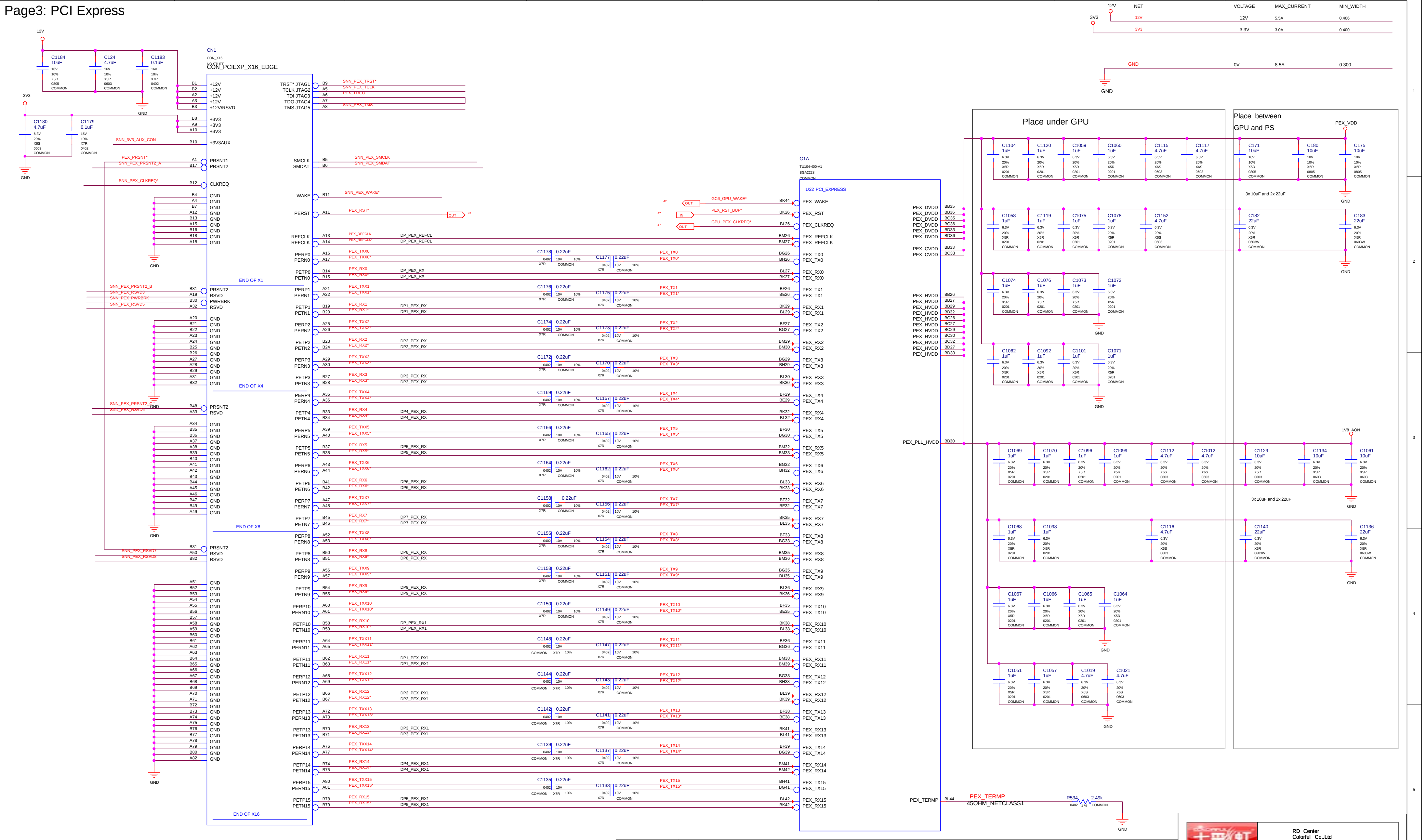
12V
C1184 10uF 16V 10% X5R 0805 COMMON
C124 4.7uF 16V 10% X5R 0603 COMMON
C1183 0.1uF 16V 10% X7R 0402 COMMON
3V3
C1180 4.7uF 6.3V 20% X6S 0603 COMMON
C1179 0.1uF 16V 10% X7R 0402 COMMON
GND
CN1
CON_X16
NO STUFF
CON_PCIEXP_X16_EDGE
B1 +12V
B2 +12V
A2 +12V
A3 +12V
B3 +12V/RSVD
B8 +3V3
A9 +3V3
A10 +3V3
SNN_3V3_AUX_CON
B10 +3V3AUX
PEX_PRSNT*
A1 PRSNT1
SNN_PEX_PRSNT2_A
B17 PRSNT2
SNN_PEX_CLKREQ*
B12 CLKREQ
B4 A4 B7 A12 B13 A15 B16 B18 A18 GND
END OF X1
SNN_PEX_PRSNT2_B
B31 PRSNT2
SNN_PEX_RSVD3
A19 RSVD
SNN_PEX_PWRBRK
B30 PWRBRK
SNN_PEX_RSVD5
A32 RSVD
A20 B21 B22 A23 A24 B25 B26 A27 A28 B29 A31 B32 GND
END OF X4
SNN_PEX_PRSNT2_C
B48 PRSNT2
SNN_PEX_RSVD6
A33 RSVD
A34 B35 B36 A37 A38 B39 B40 A41 A42 B43 B44 A45 A46 B47 B49 A49 GND
END OF X8
SNN_PEX_RSVD7
B81 PRSNT2
A50 RSVD
SNN_PEX_RSVD8
B82 RSVD
A51 B52 B53 A54 A55 B56 B57 A58 A59 B60 B61 A62 A63 B64 B65 A66 A67 B68 B69 A70 A71 B72 B73 A74 A75 B76 B77 A78 A79 B80 A82 GND
END OF X16
TRST* JTAG1 B9 SNN_PEX_TRST*
TCLK JTAG2 A5 SNN_PEX_TCLK
TDI JTAG3 A6 PEX_TDI_O
TDO JTAG4 A7
TMS JTAG5 A8 SNN_PEX_TMS
SMCLK B5 SNN_PEX_SMCLK
SMDAT B6 SNN_PEX_SMDAT
WAKE B11 SNN_PEX_WAKE*
PERST A11 PEX_RST* OUT 47
REFCLK A13 PEX_REFCLK DP_PEX_REFCL
REFCLK A14 PEX_REFCLK* DP_PEX_REFCL
PERP0 A16 PEX_TXX0
PERN0 A17 PEX_TXX0*
PETP0 B14 PEX_RX0 DP_PEX_RX
PETN0 B15 PEX_RX0* DP_PEX_RX
PERP1 A21 PEX_TXX1
PERN1 A22 PEX_TXX1*
PETP1 B19 PEX_RX1 DP1_PEX_RX
PETN1 B20 PEX_RX1* DP1_PEX_RX
PERP2 A25 PEX_TXX2
PERN2 A26 PEX_TXX2*
PETP2 B23 PEX_RX2 DP2_PEX_RX
PETN2 B24 PEX_RX2* DP2_PEX_RX
PERP3 A29 PEX_TXX3
PERN3 A30 PEX_TXX3*
PETP3 B27 PEX_RX3 DP3_PEX_RX
PETN3 B28 PEX_RX3* DP3_PEX_RX
PERP4 A35 PEX_TXX4
PERN4 A36 PEX_TXX4*
PETP4 B33 PEX_RX4 DP4_PEX_RX
PETN4 B34 PEX_RX4* DP4_PEX_RX
PERP5 A39 PEX_TXX5
PERN5 A40 PEX_TXX5*
PETP5 B37 PEX_RX5 DP5_PEX_RX
PETN5 B38 PEX_RX5* DP5_PEX_RX
PERP6 A43 PEX_TXX6
PERN6 A44 PEX_TXX6*
PETP6 B41 PEX_RX6 DP6_PEX_RX
PETN6 B42 PEX_RX6* DP6_PEX_RX
PERP7 A47 PEX_TXX7
PERN7 A48 PEX_TXX7*
PETP7 B45 PEX_RX7 DP7_PEX_RX
PETN7 B46 PEX_RX7* DP7_PEX_RX
PERP8 A52 PEX_TXX8
PERN8 A53 PEX_TXX8*
PETP8 B50 PEX_RX8 DP8_PEX_RX
PETN8 B51 PEX_RX8* DP8_PEX_RX
PERP9 A56 PEX_TXX9
PERN9 A57 PEX_TXX9*
PETP9 B54 PEX_RX9 DP9_PEX_RX
PETN9 B55 PEX_RX9* DP9_PEX_RX
PERP10 A60 PEX_TXX10
PERN10 A61 PEX_TXX10*
PETP10 B58 PEX_RX10 DP_PEX_RX1
PETN10 B59 PEX_RX10* DP_PEX_RX1
PERP11 A64 PEX_TXX11
PERN11 A65 PEX_TXX11*
PETP11 B62 PEX_RX11 DP1_PEX_RX1
PETN11 B63 PEX_RX11* DP1_PEX_RX1
PERP12 A68 PEX_TXX12
PERN12 A69 PEX_TXX12*
PETP12 B66 PEX_RX12 DP2_PEX_RX1
PETN12 B67 PEX_RX12* DP2_PEX_RX1
PERP13 A72 PEX_TXX13
PERN13 A73 PEX_TXX13*
PETP13 B70 PEX_RX13 DP3_PEX_RX1
PETN13 B71 PEX_RX13* DP3_PEX_RX1
PERP14 A76 PEX_TXX14
PERN14 A77 PEX_TXX14*
PETP14 B74 PEX_RX14 DP4_PEX_RX1
PETN14 B75 PEX_RX14* DP4_PEX_RX1
PERP15 A80 PEX_TXX15
PERN15 A81 PEX_TXX15*
PETP15 B78 PEX_RX15 DP5_PEX_RX1
PETN15 B79 PEX_RX15* DP5_PEX_RX1
C1178 0.22uF 0402 10V 10% X7R COMMON
C1177 0.22uF 0402 10V 10% X7R COMMON
C1176 0.22uF / C1175 0.22uF
C1174 0.22uF / C1173 0.22uF
C1172 0.22uF / C1170 0.22uF
C1169 0.22uF / C1167 0.22uF
C1166 0.22uF / C1165 0.22uF
C1164 0.22uF / C1162 0.22uF
C1158 0.22uF / C1156 0.22uF
C1155 0.22uF / C1154 0.22uF
C1153 0.22uF / C1151 0.22uF
C1150 0.22uF / C1149 0.22uF
C1148 0.22uF / C1147 0.22uF
C1144 0.22uF / C1143 0.22uF
C1142 0.22uF / C1141 0.22uF
C1139 0.22uF / C1137 0.22uF
C1135 0.22uF / C1133 0.22uF
PEX_TX0 PEX_TX0* ... PEX_TX15 PEX_TX15*
G1A
TU104-400-A1
BGA2228
COMMON
1/22 PCI_EXPRESS
47 OUT GC6_GPU_WAKE* BK44 PEX_WAKE
47 IN PEX_RST_BUF* BK26 PEX_RST
47 OUT GPU_PEX_CLKREQ* BL26 PEX_CLKREQ
BM26 PEX_REFCLK
BM27 PEX_REFCLK
BG26 PEX_TX0 / BH26 PEX_TX0
BL27 PEX_RX0 / BK27 PEX_RX0
BF26 PEX_TX1 / BE26 PEX_TX1
BK29 PEX_RX1 / BL29 PEX_RX1
BF27 PEX_TX2 / BG27 PEX_TX2
BM29 PEX_RX2 / BM30 PEX_RX2
BG29 PEX_TX3 / BH29 PEX_TX3
BL30 PEX_RX3 / BK30 PEX_RX3
BF29 PEX_TX4 / BE29 PEX_TX4
BK32 PEX_RX4 / BL32 PEX_RX4
BF30 PEX_TX5 / BG30 PEX_TX5
BM32 PEX_RX5 / BM33 PEX_RX5
BG32 PEX_TX6 / BH32 PEX_TX6
BL33 PEX_RX6 / BK33 PEX_RX6
BF32 PEX_TX7 / BE32 PEX_TX7
BK35 PEX_RX7 / BL35 PEX_RX7
BF33 PEX_TX8 / BG33 PEX_TX8
BM35 PEX_RX8 / BM36 PEX_RX8
BG35 PEX_TX9 / BH35 PEX_TX9
BL36 PEX_RX9 / BK36 PEX_RX9
BF35 PEX_TX10 / BE35 PEX_TX10
BK38 PEX_RX10 / BL38 PEX_RX10
BF36 PEX_TX11 / BG36 PEX_TX11
BM38 PEX_RX11 / BM39 PEX_RX11
BG38 PEX_TX12 / BH38 PEX_TX12
BL39 PEX_RX12 / BK39 PEX_RX12
BF38 PEX_TX13 / BE38 PEX_TX13
BK41 PEX_RX13 / BL41 PEX_RX13
BF39 PEX_TX14 / BG39 PEX_TX14
BM41 PEX_RX14 / BM42 PEX_RX14
BH41 PEX_TX15 / BG41 PEX_TX15
BL42 PEX_RX15 / BK42 PEX_RX15
PEX_DVDD BB35 BB36 BC35 BC36 BD33 BD36
PEX_CVDD BB33 BC33
PEX_HVDD BB26 BB27 BB29 BB32 BC26 BC27 BC29 BC30 BC32 BD27 BD30
PEX_PLL_HVDD BB30
PEX_TERMP BL44 PEX_TERMP 45OHM_NETCLASS1
R534 2.49k 0402 1 % COMMON
Place under GPU
C1104 1uF 6.3V 20% X5R 0201 COMMON
C1120 1uF
C1059 1uF
C1060 1uF
C1115 4.7uF 6.3V 20% X6S 0603 COMMON
C1117 4.7uF
C1058 1uF
C1119 1uF
C1075 1uF
C1078 1uF
C1152 4.7uF
C1074 1uF
C1076 1uF
C1073 1uF
C1072 1uF
C1062 1uF
C1092 1uF
C1101 1uF
C1071 1uF
C1069 1uF
C1070 1uF
C1096 1uF
C1099 1uF
C1112 4.7uF
C1012 4.7uF
C1068 1uF
C1098 1uF
C1116 4.7uF
C1067 1uF
C1066 1uF
C1065 1uF
C1064 1uF
C1051 1uF
C1057 1uF
C1019 4.7uF
C1021 4.7uF
Place between GPU and PS
PEX_VDD
C171 10uF 10V 10% X5R 0805 COMMON
C180 10uF
C175 10uF
3x 10uF and 2x 22uF
C182 22uF 6.3V 20% X5R 0603W COMMON
C183 22uF
1V8_AON
C1129 10uF 6.3V 20% X5R 0603 COMMON
C1134 10uF
C1061 10uF
3x 10uF and 2x 22uF
C1140 22uF 6.3V 20% X5R 0603W COMMON
C1136 22uF
GND

NET	VOLTAGE	MAX_CURRENT	MIN_WIDTH
12V	12V	5.5A	0.406
3V3	3.3V	3.0A	0.400
GND	0V	8.5A	0.300

ASSEMBLY	<ASSEMBLY_DESCRIPTION>
PAGE DETAIL	PCI Express

ALL NVIDIA DESIGN SPECIFICATIONS, REFERENCE SPECIFICATIONS, REFERENCE BOARDS, FILES, DRAWINGS, DIAGNOSTICS, LISTS AND OTHER DOCUMENTS OR INFORMATION (TOGETHER AND SEPARATELY, 'MATERIALS') ARE BEING PROVIDED 'AS IS'. THE MATERIALS MAY CONTAIN KNOWN AND UNKNOWN VIOLATIONS OR DEVIATIONS OF INDUSTRY STANDARDS AND SPECIFICATIONS. NVIDIA MAKES NO WARRANTIES, EXPRESSED, IMPLIED, STATUTORY OR OTHERWISE WITH RESPECT TO THE MATERIALS OR OTHERWISE, AND EXPRESSLY DISCLAIMS ALL IMPLIED WARRANTIES INCLUDING, WITHOUT LIMITATION, THE WARRANTIES OF DESIGN, OF NONINFRINGEMENT, MERCHANTABILITY OR FITNESS FOR A PARTICULAR PURPOSE, OR ARISING FROM A COURSE OF DEALING, TRADE USAGE, TRADE PRACTICE, OR INDUSTRY STANDARDS.

RD Center
Colorful Co.,Ltd
深圳市七彩虹科技发展有限公司

Size	Document Number	Rev
Custom	PG161H6-E10	A

Date: Wednesday, October 31, 2018 Sheet 3 of 53

Page4: PCIE RC TERM

NO PEX GEN4 SUPPORT

DELETE RC TERMINATIONS

ASSEMBLY	<ASSEMBLY_DESCRIPTION>
PAGE DETAIL	PCIE RC TERM

ALL NVIDIA DESIGN SPECIFICATIONS, REFERENCE SPECIFICATIONS, REFERENCE BOARDS, FILES, DRAWINGS, DIAGNOSTICS, LISTS AND OTHER DOCUMENTS OR INFORMATION (TOGETHER AND SEPARATELY, 'MATERIALS') ARE BEING PROVIDED 'AS IS'. THE MATERIALS MAY CONTAIN KNOWN AND UNKNOWN VIOLATIONS OR DEVIATIONS OF INDUSTRY STANDARDS AND SPECIFICATIONS. NVIDIA MAKES NO WARRANTIES, EXPRESSED, IMPLIED, STATUTORY OR OTHERWISE WITH RESPECT TO THE MATERIALS OR OTHERWISE, AND EXPRESSLY DISCLAIMS ALL IMPLIED WARRANTIES INCLUDING, WITHOUT LIMITATION, THE WARRANTIES OF DESIGN, OF NONINFRINGEMENT, MERCHANTABILITY OR FITNESS FOR A PARTICULAR PURPOSE, OR ARISING FROM A COURSE OF DEALING, TRADE USAGE, TRADE PRACTICE, OR INDUSTRY STANDARDS.

RD Center
Colorful Co.,Ltd
深圳市七彩虹科技发展有限公司

Size	Document Number	Rev
Custom	PG161H6-E10	A
Date:	Wednesday, October 31, 2018	Sheet 4 of 53

Page5: MEMORY: GPU Partition A/B

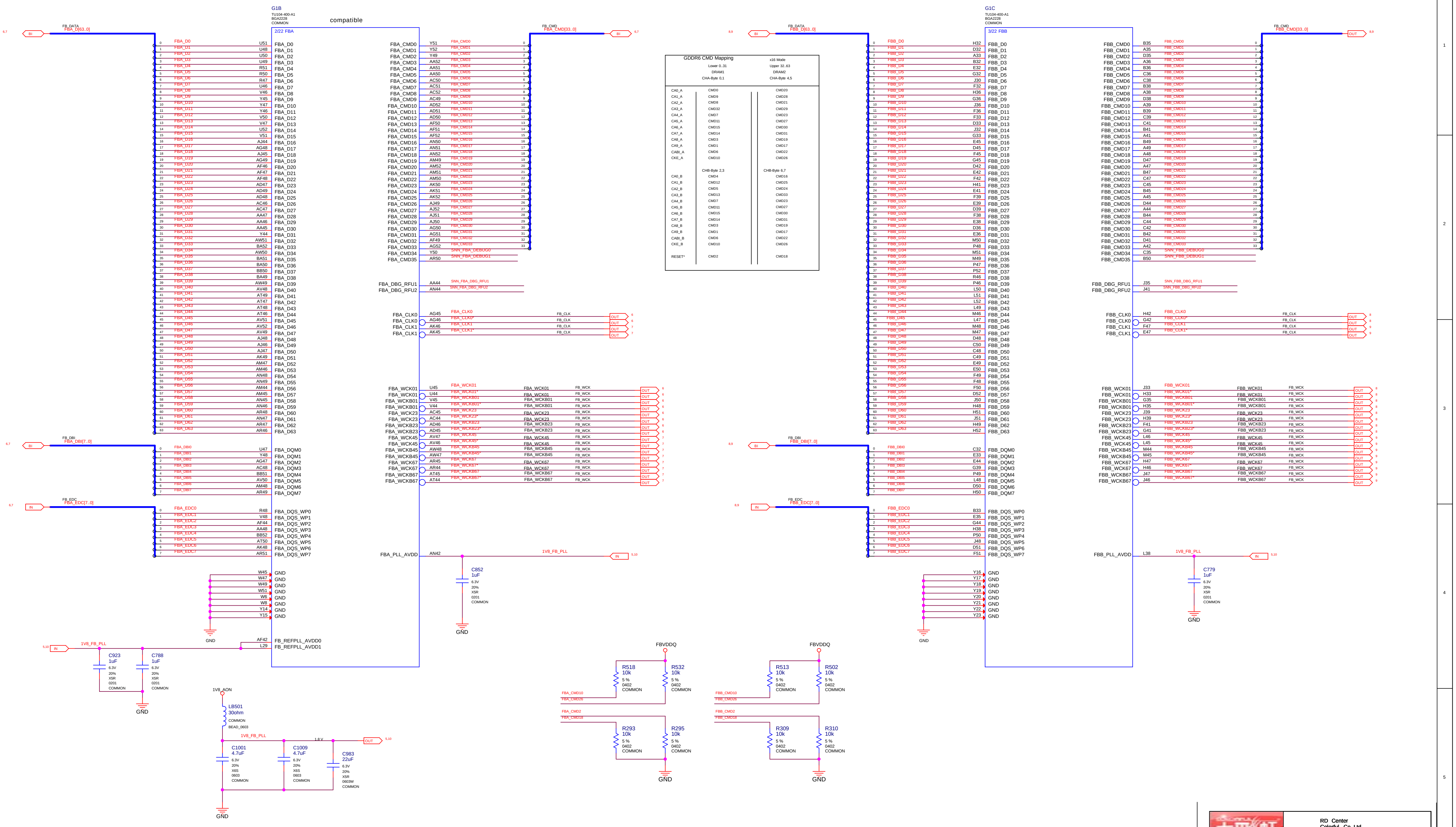
G1B
TU104-400-A1
BGA2228
COMMON
compatible
2/22 FBA
FB_DATA FBA_D[63..0]
FB_CMD FBA_CMD[33..0]
FB_DBI FBA_DBI[7..0]
FB_EDC FBA_EDC[7..0]
FBA_D0 … FBA_D63
FBA_CMD0 … FBA_CMD35
SNN_FBA_DEBUG0
SNN_FBA_DEBUG1
FBA_DBG_RFU1
FBA_DBG_RFU2
SNN_FBA_DBG_RFU1
SNN_FBA_DBG_RFU2
FBA_CLK0
FBA_CLK0*
FBA_CLK1
FBA_CLK1*
FB_CLK
FBA_WCK01
FBA_WCKB01
FBA_WCK23
FBA_WCKB23
FBA_WCK45
FBA_WCKB45
FBA_WCK67
FBA_WCKB67
FB_WCK
FBA_DQM0 … FBA_DQM7
FBA_DQS_WP0 … FBA_DQS_WP7
FBA_PLL_AVDD
1V8_FB_PLL
C852
1uF
6.3V
20%
X5R
0201
COMMON
GND
FB_REFPLL_AVDD0
FB_REFPLL_AVDD1
C923
1uF
C788
1uF
1V8_AON
LB501
30ohm
COMMON
BEAD_0603
C1001
4.7uF
X6S
0603
C1009
4.7uF
C983
22uF
0603W
1.8 V
G1C
TU104-400-A1
BGA2228
COMMON
3/22 FBB
FB_DATA FBB_D[63..0]
FB_CMD FBB_CMD[33..0]
FB_DBI FBB_DBI[7..0]
FB_EDC FBB_EDC[7..0]
FBB_D0 … FBB_D63
FBB_CMD0 … FBB_CMD35
SNN_FBB_DEBUG0
SNN_FBB_DEBUG1
FBB_DBG_RFU1
FBB_DBG_RFU2
SNN_FBB_DBG_RFU1
SNN_FBB_DBG_RFU2
FBB_CLK0
FBB_CLK0*
FBB_CLK1
FBB_CLK1*
FBB_WCK01
FBB_WCKB01
FBB_WCK23
FBB_WCKB23
FBB_WCK45
FBB_WCKB45
FBB_WCK67
FBB_WCKB67
FBB_DQM0 … FBB_DQM7
FBB_DQS_WP0 … FBB_DQS_WP7
FBB_PLL_AVDD
C779
1uF
FBVDDQ
R518
R532
R293
R295
R513
R502
R309
R310
10k
5 %
0402
FBA_CMD10
FBA_CMD26
FBA_CMD2
FBA_CMD18
FBB_CMD10
FBB_CMD26
FBB_CMD2
FBB_CMD18
BI
IN
OUT

GDDR6 CMD Mapping

x16 Mode

	Lower 0..31 DRAM1 CHA-Byte 0,1	Upper 32..63 DRAM2 CHA-Byte 4,5
CA0_A	CMD0	CMD20
CA1_A	CMD9	CMD28
CA2_A	CMD8	CMD21
CA3_A	CMD32	CMD29
CA4_A	CMD7	CMD23
CA5_A	CMD11	CMD27
CA6_A	CMD15	CMD30
CA7_A	CMD14	CMD31
CA8_A	CMD3	CMD19
CA9_A	CMD1	CMD17
CABI_A	CMD6	CMD22
CKE_A	CMD10	CMD26
	CHB-Byte 2,3	CHB-Byte 6,7
CA0_B	CMD4	CMD16
CA1_B	CMD12	CMD25
CA2_B	CMD5	CMD24
CA3_B	CMD13	CMD33
CA4_B	CMD7	CMD23
CA5_B	CMD11	CMD27
CA6_B	CMD15	CMD30
CA7_B	CMD14	CMD31
CA8_B	CMD3	CMD19
CA9_B	CMD1	CMD17
CABI_B	CMD6	CMD22
CKE_B	CMD10	CMD26
RESET*	CMD2	CMD18

ASSEMBLY	<ASSEMBLY_DESCRIPTION>
PAGE DETAIL	MEMORY: GPU FB_AB

ALL NVIDIA DESIGN SPECIFICATIONS, REFERENCE SPECIFICATIONS, REFERENCE BOARDS, FILES, DRAWINGS, DIAGNOSTICS, LISTS AND OTHER DOCUMENTS OR INFORMATION (TOGETHER AND SEPARATELY, 'MATERIALS') ARE BEING PROVIDED 'AS IS'. THE MATERIALS MAY CONTAIN KNOWN AND UNKNOWN VIOLATIONS OR DEVIATIONS OF INDUSTRY STANDARDS AND SPECIFICATIONS. NVIDIA MAKES NO WARRANTIES, EXPRESSED, IMPLIED, STATUTORY OR OTHERWISE WITH RESPECT TO THE MATERIALS OR OTHERWISE, AND EXPRESSLY DISCLAIMS ALL IMPLIED WARRANTIES INCLUDING, WITHOUT LIMITATION, THE WARRANTIES OF DESIGN, OF NONINFRINGEMENT, MERCHANTABILITY OR FITNESS FOR A PARTICULAR PURPOSE, OR ARISING FROM A COURSE OF DEALING, TRADE USAGE, TRADE PRACTICE, OR INDUSTRY STANDARDS.

RD Center
Colorful Co.,Ltd
深圳市七彩虹科技发展有限公司

Size	Document Number	Rev
Custom	PG161H6-E10	A
Date:	Wednesday, October 31, 2018	Sheet 5 of 53

Page6: MEMORY: FBA Partition 31..0

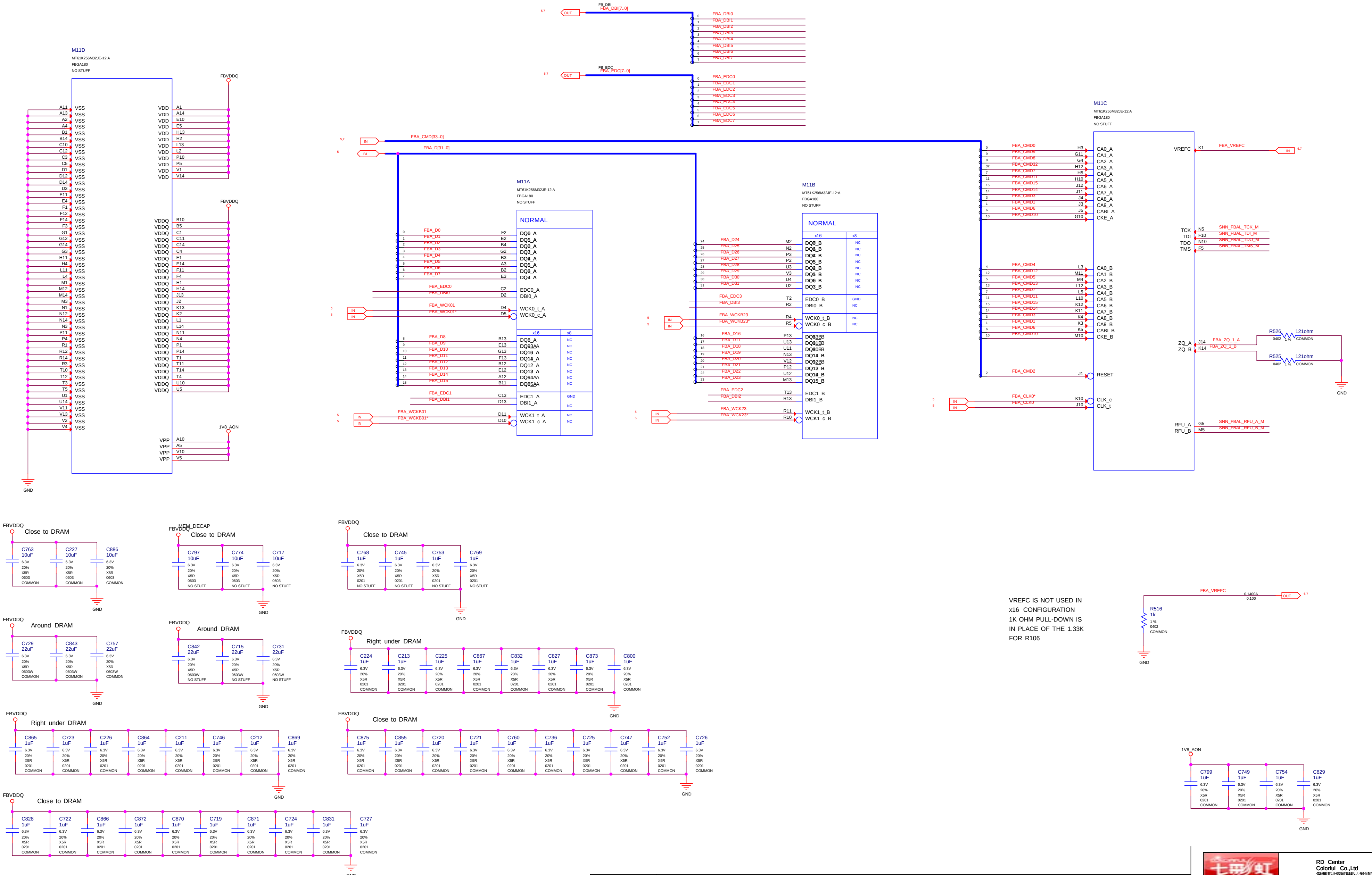
FB_DBI
FBA_DBI[7..0]
OUT
5,7
FBA_DBI0
FBA_DBI1
FBA_DBI2
FBA_DBI3
FBA_DBI4
FBA_DBI5
FBA_DBI6
FBA_DBI7
FB_EDC
FBA_EDC[7..0]
FBA_EDC0
FBA_EDC1
FBA_EDC2
FBA_EDC3
FBA_EDC4
FBA_EDC5
FBA_EDC6
FBA_EDC7
FBA_CMD[33..0]
FBA_D[31..0]
IN
BI
M11D
MT61K256M32JE-12:A
FBGA180
NO STUFF
VSS
A11 A13 A2 A4 B1 B14 C10 C12 C3 C5 D1 D12 D14 D3 E11 E4 F1 F12 F14 F3 G1 G12 G14 G3 H11 H4 L11 L4 M1 M12 M14 M3 N1 N12 N14 N3 P11 P4 R1 R12 R14 R3 T10 T12 T3 T5 U1 U14 V11 V13 V2 V4
VDD
A1 A14 E10 E5 H13 H2 L13 L2 P10 P5 V1 V14
FBVDDQ
VDDQ
B10 B5 C1 C11 C14 C4 E1 E14 F11 F4 H1 H14 J13 J2 K13 K2 L1 L14 N11 N4 P1 P14 T1 T11 T14 T4 U10 U5
1V8_AON
VPP
A10 A5 V10 V5
GND
M11A
MT61K256M32JE-12:A
FBGA180
NO STUFF
NORMAL
FBA_D0 F2 DQ0_A
FBA_D1 E2 DQ5_A
FBA_D2 B4 DQ2_A
FBA_D3 G2 DQ3_A
FBA_D4 B3 DQ2_A
FBA_D5 A3 DQ5_A
FBA_D6 B2 DQ8_A
FBA_D7 E3 DQ7_A
FBA_EDC0 C2 EDC0_A
FBA_DBI0 D2 DBI0_A
FBA_WCK01 D4 WCK0_t_A
FBA_WCK01* D5 WCK0_c_A
x16
x8
FBA_D8 B13 DQ8_A
FBA_D9 E13 DQ13_A
FBA_D10 G13 DQ10_A
FBA_D11 F13 DQ14_A
FBA_D12 B12 DQ12_A
FBA_D13 E12 DQ12_A
FBA_D14 A12 DQ14_A
FBA_D15 B11 DQ15_A
NC
FBA_EDC1 C13 EDC1_A
FBA_DBI1 D13 DBI1_A
GND
FBA_WCKB01 D11 WCK1_t_A
FBA_WCKB01* D10 WCK1_c_A
M11B
MT61K256M32JE-12:A
FBGA180
NO STUFF
NORMAL
FBA_D24 M2 DQ7_B
FBA_D25 N2 DQ6_B
FBA_D26 P3 DQ4_B
FBA_D27 P2 DQ5_B
FBA_D28 U3 DQ4_B
FBA_D29 V3 DQ5_B
FBA_D30 U4 DQ6_B
FBA_D31 U2 DQ3_B
FBA_EDC3 T2 EDC0_B
FBA_DBI3 R2 DBI0_B
FBA_WCKB23 R4 WCK0_t_B
FBA_WCKB23* R5 WCK0_c_B
FBA_D16 P13 DQ13_B
FBA_D17 U13 DQ11_B
FBA_D18 U11 DQ10_B
FBA_D19 N13 DQ14_B
FBA_D20 V12 DQ12_B
FBA_D21 P12 DQ13_B
FBA_D22 U12 DQ10_B
FBA_D23 M13 DQ15_B
FBA_EDC2 T13 EDC1_B
FBA_DBI2 R13 DBI1_B
FBA_WCK23 R11 WCK1_t_B
FBA_WCK23* R10 WCK1_c_B
M11C
MT61K256M32JE-12:A
FBGA180
NO STUFF
FBA_CMD0 H3 CA0_A
FBA_CMD9 G11 CA1_A
FBA_CMD8 G4 CA2_A
FBA_CMD32 H12 CA3_A
FBA_CMD7 H5 CA4_A
FBA_CMD11 H10 CA5_A
FBA_CMD15 J12 CA6_A
FBA_CMD14 J11 CA7_A
FBA_CMD3 J4 CA8_A
FBA_CMD1 J3 CA9_A
FBA_CMD6 J5 CABI_A
FBA_CMD10 G10 CKE_A
FBA_CMD4 L3 CA0_B
FBA_CMD12 M11 CA1_B
FBA_CMD5 M4 CA2_B
FBA_CMD13 L12 CA3_B
FBA_CMD7 L5 CA4_B
FBA_CMD11 L10 CA5_B
FBA_CMD15 K12 CA6_B
FBA_CMD14 K11 CA7_B
FBA_CMD3 K4 CA8_B
FBA_CMD1 K3 CA9_B
FBA_CMD6 K5 CABI_B
FBA_CMD10 M10 CKE_B
FBA_CMD2 J1 RESET
FBA_CLK0* K10 CLK_c
FBA_CLK0 J10 CLK_t
VREFC K1 FBA_VREFC
6,7
TCK N5 SNN_FBAL_TCK_M
TDI F10 SNN_FBAL_TDI_M
TDO N10 SNN_FBAL_TDO_M
TMS F5 SNN_FBAL_TMS_M
ZQ_A J14 FBA_ZQ_1_A
ZQ_B K14 FBA_ZQ_1_B
R526 121ohm 0402 1 % COMMON
R525 121ohm 0402 1 % COMMON
RFU_A G5 SNN_FBAL_RFU_A_M
RFU_B M5 SNN_FBAL_RFU_B_M
FBVDDQ
Close to DRAM
C763 10uF 6.3V 20% X5R 0603 COMMON
C227 10uF 6.3V 20% X5R 0603 COMMON
C886 10uF 6.3V 20% X5R 0603 COMMON
MEM_DECAP
Close to DRAM
C797 10uF 6.3V 20% X5R 0603 NO STUFF
C774 10uF 6.3V 20% X5R 0603 NO STUFF
C717 10uF 6.3V 20% X5R 0603 NO STUFF
Close to DRAM
C768 1uF 6.3V 20% X5R 0201 NO STUFF
C745 1uF 6.3V 20% X5R 0201 NO STUFF
C753 1uF 6.3V 20% X5R 0201 NO STUFF
C769 1uF 6.3V 20% X5R 0201 NO STUFF
Around DRAM
C729 22uF 6.3V 20% X5R 0603W COMMON
C843 22uF 6.3V 20% X5R 0603W COMMON
C757 22uF 6.3V 20% X5R 0603W COMMON
Around DRAM
C842 22uF 6.3V 20% X5R 0603W NO STUFF
C715 22uF 6.3V 20% X5R 0603W NO STUFF
C731 22uF 6.3V 20% X5R 0603W NO STUFF
Right under DRAM
C224 1uF C213 1uF C225 1uF C867 1uF C832 1uF C827 1uF C873 1uF C800 1uF
6.3V 20% X5R 0201 COMMON
FBA_VREFC
0.1400A
0.100
OUT
R516 1k 1 % 0402 COMMON
Right under DRAM
C865 1uF C723 1uF C226 1uF C864 1uF C211 1uF C746 1uF C212 1uF C869 1uF
6.3V 20% X5R 0201 COMMON
Close to DRAM
C875 1uF C855 1uF C720 1uF C721 1uF C760 1uF C736 1uF C725 1uF C747 1uF C752 1uF C726 1uF
6.3V 20% X5R 0201 COMMON
1V8_AON
C799 1uF C749 1uF C754 1uF C829 1uF
6.3V 20% X5R 0201 COMMON
Close to DRAM
C828 1uF C722 1uF C866 1uF C872 1uF C870 1uF C719 1uF C871 1uF C724 1uF C831 1uF C727 1uF
6.3V 20% X5R 0201 COMMON
GND

VREFC IS NOT USED IN
x16 CONFIGURATION
1K OHM PULL-DOWN IS
IN PLACE OF THE 1.33K
FOR R106

ASSEMBLY	<ASSEMBLY_DESCRIPTION>
PAGE DETAIL	MEMORY: FBA[31:0]

ALL NVIDIA DESIGN SPECIFICATIONS, REFERENCE SPECIFICATIONS, REFERENCE BOARDS, FILES, DRAWINGS, DIAGNOSTICS, LISTS AND OTHER DOCUMENTS OR INFORMATION (TOGETHER AND SEPARATELY, 'MATERIALS') ARE BEING PROVIDED 'AS IS'. THE MATERIALS MAY CONTAIN KNOWN AND UNKNOWN VIOLATIONS OR DEVIATIONS OF INDUSTRY STANDARDS AND SPECIFICATIONS. NVIDIA MAKES NO WARRANTIES, EXPRESSED, IMPLIED, STATUTORY OR OTHERWISE WITH RESPECT TO THE MATERIALS OR OTHERWISE, AND EXPRESSLY DISCLAIMS ALL IMPLIED WARRANTIES INCLUDING, WITHOUT LIMITATION, THE WARRANTIES OF DESIGN, OF NONINFRINGEMENT, MERCHANTABILITY OR FITNESS FOR A PARTICULAR PURPOSE, OR ARISING FROM A COURSE OF DEALING, TRADE USAGE, TRADE PRACTICE, OR INDUSTRY STANDARDS.

RD Center
Colorful Co.,Ltd
深圳市七彩虹科技发展有限 公 司

Size	Document Number	Rev
Custom	PG161H6-E10	A
Date:	Friday, November 02, 2018	Sheet 6 of 53

Page7: MEMORY: FBA Partition 63..32

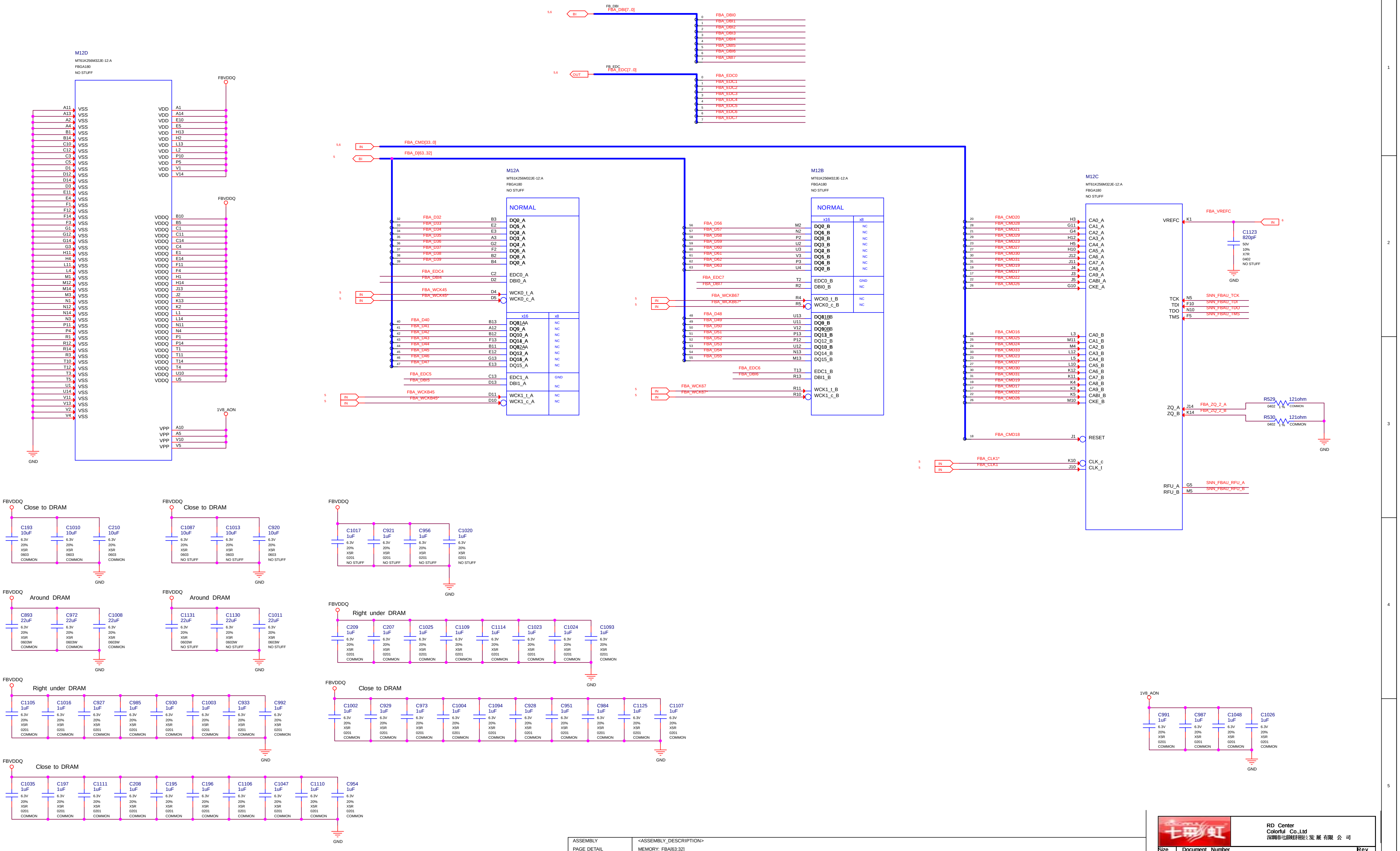
M12D
MT61K256M32JE-12:A
FBGA180
NO STUFF
VSS: A11 A13 A2 A4 B1 B14 C10 C12 C3 C5 D1 D12 D14 D3 E11 E4 F1 F12 F14 F3 G1 G12 G14 G3 H11 H4 L11 L4 M1 M12 M14 M3 N1 N12 N14 N3 P11 P4 R1 R12 R14 R3 T10 T12 T3 T5 U1 U14 V11 V13 V2 V4
GND
FBVDDQ
VDD: A1 A14 E10 E5 H13 H2 L13 L2 P10 P5 V1 V14
VDDQ: B10 B5 C1 C11 C14 C4 E1 E14 F11 F4 H1 H14 J13 J2 K13 K2 L1 L14 N11 N4 P1 P14 T1 T11 T14 T4 U10 U5
1V8_AON
VPP: A10 A5 V10 V5
5,6 BI FB_DBI FBA_DBI[7..0]
FBA_DBI0 FBA_DBI1 FBA_DBI2 FBA_DBI3 FBA_DBI4 FBA_DBI5 FBA_DBI6 FBA_DBI7
5,6 OUT FB_EDC FBA_EDC[7..0]
FBA_EDC0 FBA_EDC1 FBA_EDC2 FBA_EDC3 FBA_EDC4 FBA_EDC5 FBA_EDC6 FBA_EDC7
5,6 IN FBA_CMD[33..0]
5 BI FBA_D[63..32]
M12A
MT61K256M32JE-12:A
FBGA180
NO STUFF
NORMAL
FBA_D32 B3 DQ0_A
FBA_D33 E2 DQ5_A
FBA_D34 E3 DQ4_A
FBA_D35 A3 DQ3_A
FBA_D36 G2 DQ4_A
FBA_D37 F2 DQ6_A
FBA_D38 B2 DQ6_A
FBA_D39 B4 DQ0_A
FBA_EDC4 C2 EDC0_A
FBA_DBI4 D2 DBI0_A
FBA_WCK45 D4 WCK0_t_A
FBA_WCK45* D5 WCK0_c_A
x16 x8
FBA_D40 B13 DQ81AA NC
FBA_D41 A12 DQ9_A NC
FBA_D42 B12 DQ10_A NC
FBA_D43 F13 DQ14_A NC
FBA_D44 B11 DQ82AA NC
FBA_D45 E12 DQ12_A NC
FBA_D46 G13 DQ16_A NC
FBA_D47 E13 DQ15_A NC
FBA_EDC5 C13 EDC1_A GND
FBA_DBI5 D13 DBI1_A NC
FBA_WCKB45 D11 WCK1_t_A NC
FBA_WCKB45* D10 WCK1_c_A NC
M12B
MT61K256M32JE-12:A
FBGA180
NO STUFF
NORMAL
FBA_D56 M2 DQ0_B NC
FBA_D57 N2 DQ6_B NC
FBA_D58 P2 DQ3_B NC
FBA_D59 U2 DQ3_B NC
FBA_D60 U3 DQ4_B NC
FBA_D61 V3 DQ5_B NC
FBA_D62 P3 DQ6_B NC
FBA_D63 U4 DQ0_B NC
FBA_EDC7 T2 EDC0_B GND
FBA_DBI7 R2 DBI0_B NC
FBA_WCKB67 R4 WCK0_t_B NC
FBA_WCKB67* R5 WCK0_c_B NC
FBA_D48 U13 DQ81BB
FBA_D49 U11 DQ9_B
FBA_D50 V12 DQ90BB
FBA_D51 P13 DQ13_B
FBA_D52 P12 DQ12_B
FBA_D53 U12 DQ10_B
FBA_D54 N13 DQ14_B
FBA_D55 M13 DQ15_B
FBA_EDC6 T13 EDC1_B
FBA_DBI6 R13 DBI1_B
FBA_WCK67 R11 WCK1_t_B
FBA_WCK67* R10 WCK1_c_B
M12C
MT61K256M32JE-12:A
FBGA180
NO STUFF
FBA_CMD20 H3 CA0_A
FBA_CMD28 G11 CA1_A
FBA_CMD21 G4 CA2_A
FBA_CMD29 H12 CA3_A
FBA_CMD23 H5 CA4_A
FBA_CMD27 H10 CA5_A
FBA_CMD30 J12 CA6_A
FBA_CMD31 J11 CA7_A
FBA_CMD19 J4 CA8_A
FBA_CMD17 J3 CA9_A
FBA_CMD22 J5 CABI_A
FBA_CMD26 G10 CKE_A
FBA_CMD16 L3 CA0_B
FBA_CMD25 M11 CA1_B
FBA_CMD24 M4 CA2_B
FBA_CMD33 L12 CA3_B
FBA_CMD23 L5 CA4_B
FBA_CMD27 L10 CA5_B
FBA_CMD30 K12 CA6_B
FBA_CMD31 K11 CA7_B
FBA_CMD19 K4 CA8_B
FBA_CMD17 K3 CA9_B
FBA_CMD22 K5 CABI_B
FBA_CMD26 M10 CKE_B
FBA_CMD18 J1 RESET
FBA_CLK1* K10 CLK_c
FBA_CLK1 J10 CLK_t
VREFC K1 FBA_VREFC IN 6
C1123 820pF 50V 10% X7R 0402 NO STUFF
TCK N5 SNN_FBAU_TCK
TDI F10 SNN_FBAU_TDI
TDO N10 SNN_FBAU_TDO
TMS F5 SNN_FBAU_TMS
ZQ_A J14 FBA_ZQ_2_A
ZQ_B K14 FBA_ZQ_2_B
R529 121ohm 0402 1% COMMON
R530 121ohm 0402 1% COMMON
RFU_A G5 SNN_FBAU_RFU_A
RFU_B M5 SNN_FBAU_RFU_B
FBVDDQ Close to DRAM
C193 10uF 6.3V 20% X5R 0603 COMMON
C1010 10uF 6.3V 20% X5R 0603 COMMON
C210 10uF 6.3V 20% X5R 0603 COMMON
FBVDDQ Close to DRAM
C1087 10uF 6.3V 20% X5R 0603 NO STUFF
C1013 10uF 6.3V 20% X5R 0603 NO STUFF
C920 10uF 6.3V 20% X5R 0603 NO STUFF
FBVDDQ
C1017 1uF 6.3V 20% X5R 0201 NO STUFF
C921 1uF 6.3V 20% X5R 0201 NO STUFF
C956 1uF 6.3V 20% X5R 0201 NO STUFF
C1020 1uF 6.3V 20% X5R 0201 NO STUFF
FBVDDQ Around DRAM
C893 22uF 6.3V 20% X5R 0603W COMMON
C972 22uF 6.3V 20% X5R 0603W COMMON
C1008 22uF 6.3V 20% X5R 0603W COMMON
FBVDDQ Around DRAM
C1131 22uF 6.3V 20% X5R 0603W NO STUFF
C1130 22uF 6.3V 20% X5R 0603W NO STUFF
C1011 22uF 6.3V 20% X5R 0603W NO STUFF
FBVDDQ Right under DRAM
C209 C207 C1025 C1109 C1114 C1023 C1024 C1093 1uF 6.3V 20% X5R 0201 COMMON
FBVDDQ Right under DRAM
C1105 C1016 C927 C985 C930 C1003 C933 C992 1uF 6.3V 20% X5R 0201 COMMON
FBVDDQ Close to DRAM
C1002 C929 C973 C1004 C1094 C928 C951 C984 C1125 C1107 1uF 6.3V 20% X5R 0201 COMMON
FBVDDQ Close to DRAM
C1035 C197 C1111 C208 C195 C196 C1106 C1047 C1110 C954 1uF 6.3V 20% X5R 0201 COMMON
1V8_AON
C991 C987 C1048 C1026 1uF 6.3V 20% X5R 0201 COMMON
GND

ASSEMBLY	<ASSEMBLY_DESCRIPTION>
PAGE DETAIL	MEMORY: FBA[63:32]

ALL NVIDIA DESIGN SPECIFICATIONS, REFERENCE SPECIFICATIONS, REFERENCE BOARDS, FILES, DRAWINGS, DIAGNOSTICS, LISTS AND OTHER DOCUMENTS OR INFORMATION (TOGETHER AND SEPARATELY, 'MATERIALS') ARE BEING PROVIDED 'AS IS'. THE MATERIALS MAY CONTAIN KNOWN AND UNKNOWN VIOLATIONS OR DEVIATIONS OF INDUSTRY STANDARDS AND SPECIFICATIONS. NVIDIA MAKES NO WARRANTIES, EXPRESSED, IMPLIED, STATUTORY OR OTHERWISE WITH RESPECT TO THE MATERIALS OR OTHERWISE, AND EXPRESSLY DISCLAIMS ALL IMPLIED WARRANTIES INCLUDING, WITHOUT LIMITATION, THE WARRANTIES OF DESIGN, OF NONINFRINGEMENT, MERCHANTABILITY OR FITNESS FOR A PARTICULAR PURPOSE, OR ARISING FROM A COURSE OF DEALING, TRADE USAGE, TRADE PRACTICE, OR INDUSTRY STANDARDS.

RD Center
Colorful Co.,Ltd
深圳市七彩虹科技发展有限公司

Size	Document Number	Rev
Custom	PG161H6-E10	A

Date: Friday, November 02, 2018 Sheet 7 of 53

Page8: MEMORY: FBB Partition 31..0

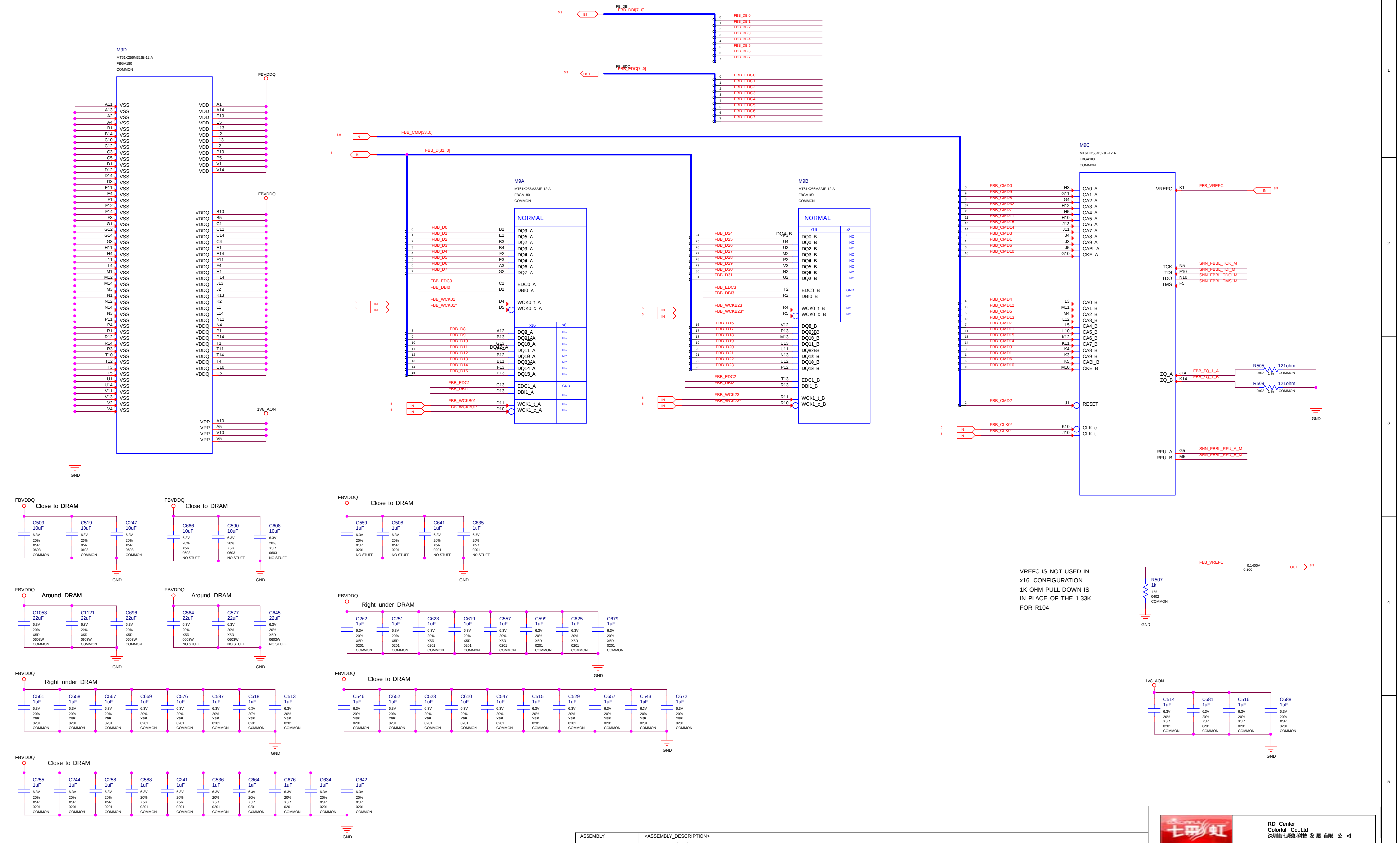
M9D
MT61K256M32JE-12:A
FBGA180
COMMON
VSS: A11 A13 A2 A4 B1 B14 C10 C12 C3 C5 D1 D12 D14 D3 E11 E4 F1 F12 F14 F3 G1 G12 G14 G3 H11 H4 L11 L4 M1 M12 M14 M3 N1 N12 N14 N3 P11 P4 R1 R12 R14 R3 T10 T12 T3 T5 U1 U14 V11 V13 V2 V4
VDD: A1 A14 E10 E5 H13 H2 L13 L2 P10 P5 V1 V14
VDDQ: B10 B5 C1 C11 C14 C4 E1 E14 F11 F4 H1 H14 J13 J2 K13 K2 L1 L14 N11 N4 P1 P14 T1 T11 T14 T4 U10 U5
VPP: A10 A5 V10 V5
FBVDDQ
1V8_AON
GND
FB_DBI
FBB_DBI[7..0]
BI
FBB_DBI0 … FBB_DBI7
FB_EDC
FBB_EDC[7..0]
OUT
FBB_EDC0 … FBB_EDC7
FBB_CMD[33..0]
FBB_D[31..0]
M9A
MT61K256M32JE-12:A
FBGA180
COMMON
NORMAL
FBB_D0 … FBB_D7: B2 E2 B3 B4 F2 E3 A3 G2 — DQ0_A … DQ7_A
FBB_EDC0 C2 EDC0_A
FBB_DBI0 D2 DBI0_A
FBB_WCK01 D4 WCK0_t_A
FBB_WCK01* D5 WCK0_c_A
x16 x8
FBB_D8 … FBB_D15: A12 B13 G13 E12 B12 B11 F13 E13 — DQ8_A … DQ15_A
NC
FBB_EDC1 C13 EDC1_A GND
FBB_DBI1 D13 DBI1_A
FBB_WCKB01 D11 WCK1_t_A
FBB_WCKB01* D10 WCK1_c_A
M9B
MT61K256M32JE-12:A
FBGA180
COMMON
NORMAL
FBB_D24 … FBB_D31: P3 U4 U3 M2 P2 V3 N2 U2 — DQ0_B … DQ7_B
FBB_EDC3 T2 EDC0_B
FBB_DBI3 R2 DBI0_B
FBB_WCKB23 R4 WCK0_t_B
FBB_WCKB23* R5 WCK0_c_B
FBB_D16 … FBB_D23: V12 P13 M13 U13 U11 N13 U12 P12 — DQ8_B … DQ15_B
FBB_EDC2 T13 EDC1_B
FBB_DBI2 R13 DBI1_B
FBB_WCK23 R11 WCK1_t_B
FBB_WCK23* R10 WCK1_c_B
M9C
MT61K256M32JE-12:A
FBGA180
COMMON
FBB_CMD0 H3 CA0_A
FBB_CMD9 G11 CA1_A
FBB_CMD8 G4 CA2_A
FBB_CMD32 H12 CA3_A
FBB_CMD7 H5 CA4_A
FBB_CMD11 H10 CA5_A
FBB_CMD15 J12 CA6_A
FBB_CMD14 J11 CA7_A
FBB_CMD3 J4 CA8_A
FBB_CMD1 J3 CA9_A
FBB_CMD6 J5 CABI_A
FBB_CMD10 G10 CKE_A
FBB_CMD4 L3 CA0_B
FBB_CMD12 M11 CA1_B
FBB_CMD5 M4 CA2_B
FBB_CMD13 L12 CA3_B
FBB_CMD7 L5 CA4_B
FBB_CMD11 L10 CA5_B
FBB_CMD15 K12 CA6_B
FBB_CMD14 K11 CA7_B
FBB_CMD3 K4 CA8_B
FBB_CMD1 K3 CA9_B
FBB_CMD6 K5 CABI_B
FBB_CMD10 M10 CKE_B
FBB_CMD2 J1 RESET
FBB_CLK0* K10 CLK_c
FBB_CLK0 J10 CLK_t
VREFC K1 FBB_VREFC IN 8,9
TCK N5 SNN_FBBL_TCK_M
TDI F10 SNN_FBBL_TDI_M
TDO N10 SNN_FBBL_TDO_M
TMS F5 SNN_FBBL_TMS_M
ZQ_A J14 FBB_ZQ_1_A
ZQ_B K14 FBB_ZQ_1_B
R505 121ohm 0402 1 % COMMON
R509 121ohm 0402 1 % COMMON
RFU_A G5 SNN_FBBL_RFU_A_M
RFU_B M5 SNN_FBBL_RFU_B_M
Close to DRAM
C509 10uF 6.3V 20% X5R 0603 COMMON
C519 10uF 6.3V 20% X5R 0603 COMMON
C247 10uF 6.3V 20% X5R 0603 COMMON
C666 10uF 6.3V 20% X5R 0603 NO STUFF
C590 10uF 6.3V 20% X5R 0603 NO STUFF
C608 10uF 6.3V 20% X5R 0603 NO STUFF
C559 1uF 6.3V 20% X5R 0201 NO STUFF
C508 1uF 6.3V 20% X5R 0201 NO STUFF
C641 1uF 6.3V 20% X5R 0201 NO STUFF
C635 1uF 6.3V 20% X5R 0201 NO STUFF
Around DRAM
C1053 22uF 6.3V 20% X5R 0603W COMMON
C1121 22uF 6.3V 20% X5R 0603W COMMON
C696 22uF 6.3V 20% X5R 0603W COMMON
C564 22uF 6.3V 20% X5R 0603W NO STUFF
C577 22uF 6.3V 20% X5R 0603W NO STUFF
C645 22uF 6.3V 20% X5R 0603W NO STUFF
Right under DRAM
C262 C251 C623 C619 C557 C599 C625 C679 1uF 6.3V 20% X5R 0201 COMMON
C561 C658 C567 C669 C576 C587 C618 C513 1uF 6.3V 20% X5R 0201 COMMON
C546 C652 C523 C610 C547 C515 C529 C657 C543 C672 1uF 6.3V 20% X5R 0201 COMMON
C255 C244 C258 C588 C241 C536 C664 C676 C634 C642 1uF 6.3V 20% X5R 0201 COMMON
R507 1k 1 % 0402 COMMON
0.1400A
0.100
C514 C681 C516 C688 1uF 6.3V 20% X5R 0201 COMMON

VREFC IS NOT USED IN
x16 CONFIGURATION
1K OHM PULL-DOWN IS
IN PLACE OF THE 1.33K
FOR R104

ASSEMBLY	<ASSEMBLY_DESCRIPTION>
PAGE DETAIL	MEMORY: FBB[31:0]

ALL NVIDIA DESIGN SPECIFICATIONS, REFERENCE SPECIFICATIONS, REFERENCE BOARDS, FILES, DRAWINGS, DIAGNOSTICS, LISTS AND OTHER DOCUMENTS OR INFORMATION (TOGETHER AND SEPARATELY, 'MATERIALS') ARE BEING PROVIDED 'AS IS'. THE MATERIALS MAY CONTAIN KNOWN AND UNKNOWN VIOLATIONS OR DEVIATIONS OF INDUSTRY STANDARDS AND SPECIFICATIONS. NVIDIA MAKES NO WARRANTIES, EXPRESSED, IMPLIED, STATUTORY OR OTHERWISE WITH RESPECT TO THE MATERIALS OR OTHERWISE, AND EXPRESSLY DISCLAIMS ALL IMPLIED WARRANTIES INCLUDING, WITHOUT LIMITATION, THE WARRANTIES OF DESIGN, OF NONINFRINGEMENT, MERCHANTABILITY OR FITNESS FOR A PARTICULAR PURPOSE, OR ARISING FROM A COURSE OF DEALING, TRADE USAGE, TRADE PRACTICE, OR INDUSTRY STANDARDS.

RD Center
Colorful Co.,Ltd
深圳市七彩虹科技 发 展 有限 公 司

Size	Document Number	Rev
Custom	PG161H6-E10	A
Date:	Wednesday, October 31, 2018	Sheet 8 of 53

Page9: MEMORY: FBB Partition 63..32

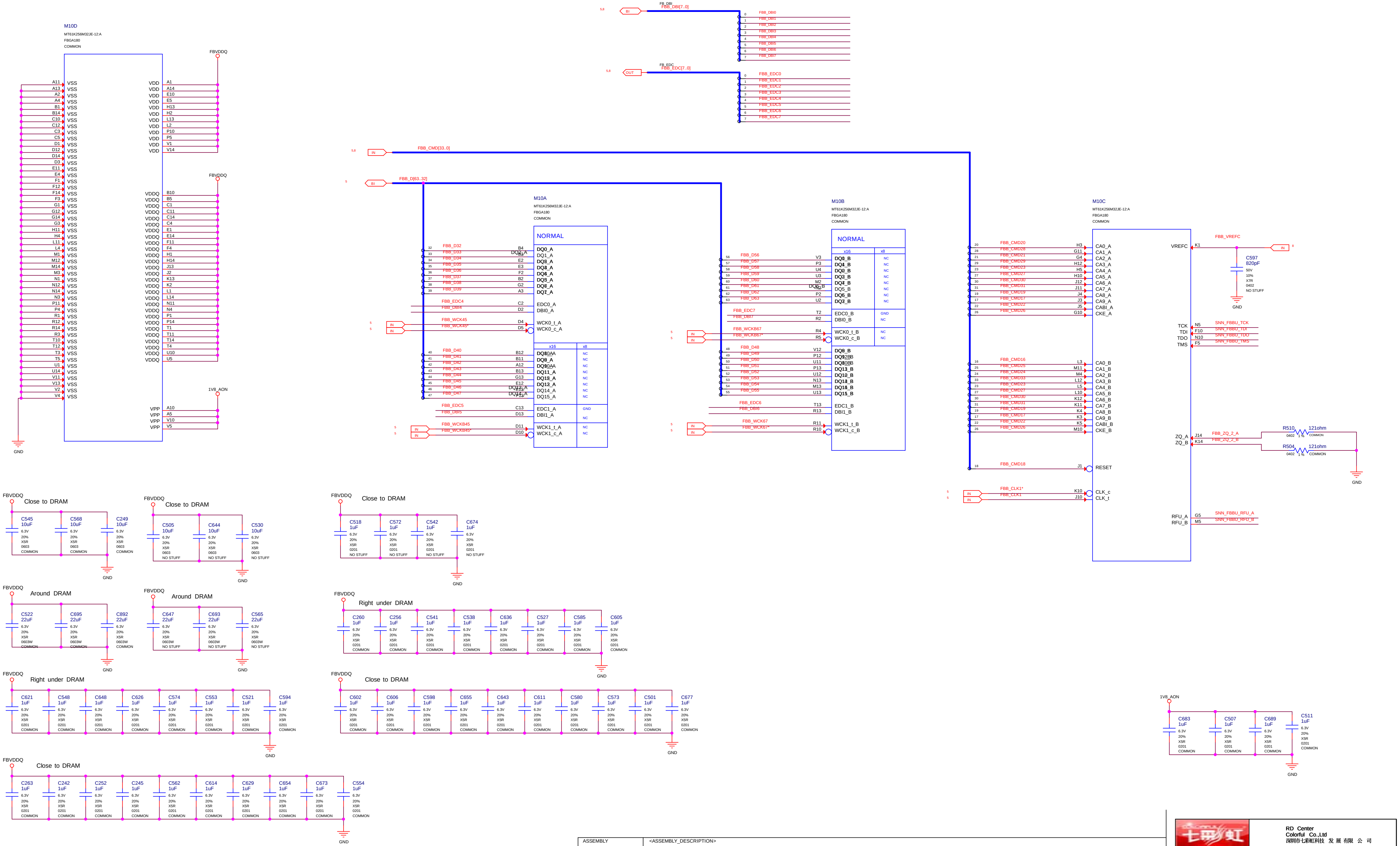

M10D
MT61K256M32JE-12:A
FBGA180
COMMON
VSS: A11, A13, A2, A4, B1, B14, C10, C12, C3, C5, D1, D12, D14, D3, E11, E4, F1, F12, F14, F3, G1, G12, G14, G3, H11, H4, L11, L4, M1, M12, M14, M3, N1, N12, N14, N3, P11, P4, R1, R12, R14, R3, T10, T12, T3, T5, U1, U14, V11, V13, V2, V4
GND
FBVDDQ
VDD: A1, A14, E10, E5, H13, H2, L13, L2, P10, P5, V1, V14
FBVDDQ
VDDQ: B10, B5, C1, C11, C14, C4, E1, E14, F11, F4, H1, H14, J13, J2, K13, K2, L1, L14, N11, N4, P1, P14, T1, T11, T14, T4, U10, U5
1V8_AON
VPP: A10, A5, V10, V5
5,8 BI FB_DBI FBB_DBI[7..0]
FBB_DBI0 FBB_DBI1 FBB_DBI2 FBB_DBI3 FBB_DBI4 FBB_DBI5 FBB_DBI6 FBB_DBI7
5,8 OUT FB_EDC FBB_EDC[7..0]
FBB_EDC0 FBB_EDC1 FBB_EDC2 FBB_EDC3 FBB_EDC4 FBB_EDC5 FBB_EDC6 FBB_EDC7
5,8 IN FBB_CMD[33..0]
5 BI FBB_D[63..32]
M10A
MT61K256M32JE-12:A
FBGA180
COMMON
NORMAL
FBB_D32 B4 DQ0_A
FBB_D33 B3 DQ1_A
FBB_D34 E2 DQ2_A
FBB_D35 E3 DQ3_A
FBB_D36 F2 DQ4_A
FBB_D37 B2 DQ5_A
FBB_D38 G2 DQ6_A
FBB_D39 A3 DQ7_A
FBB_EDC4 C2 EDC0_A
FBB_DBI4 D2 DBI0_A
FBB_WCK45 D4 WCK0_t_A
FBB_WCK45* D5 WCK0_c_A
x16 x8
FBB_D40 B12 DQ8_A NC
FBB_D41 B11 DQ9_A NC
FBB_D42 A12 DQ10_A NC
FBB_D43 B13 DQ11_A NC
FBB_D44 G13 DQ12_A NC
FBB_D45 E12 DQ13_A NC
FBB_D46 E13 DQ14_A NC
FBB_D47 F13 DQ15_A NC
FBB_EDC5 C13 EDC1_A GND
FBB_DBI5 D13 DBI1_A NC
FBB_WCKB45 D11 WCK1_t_A NC
FBB_WCKB45* D10 WCK1_c_A NC
M10B
MT61K256M32JE-12:A
FBGA180
COMMON
NORMAL
x16 x8
FBB_D56 V3 DQ0_B NC
FBB_D57 P3 DQ1_B NC
FBB_D58 U4 DQ2_B NC
FBB_D59 U3 DQ3_B NC
FBB_D60 M2 DQ4_B NC
FBB_D61 N2 DQ5_B NC
FBB_D62 P2 DQ6_B NC
FBB_D63 U2 DQ7_B NC
FBB_EDC7 T2 EDC0_B GND
FBB_DBI7 R2 DBI0_B NC
FBB_WCKB67 R4 WCK0_t_B NC
FBB_WCKB67* R5 WCK0_c_B NC
FBB_D48 V12 DQ8_B
FBB_D49 P12 DQ9_B
FBB_D50 U11 DQ10_B
FBB_D51 P13 DQ11_B
FBB_D52 U12 DQ12_B
FBB_D53 N13 DQ13_B
FBB_D54 M13 DQ14_B
FBB_D55 U13 DQ15_B
FBB_EDC6 T13 EDC1_B
FBB_DBI6 R13 DBI1_B
FBB_WCK67 R11 WCK1_t_B
FBB_WCK67* R10 WCK1_c_B
M10C
MT61K256M32JE-12:A
FBGA180
COMMON
FBB_CMD20 H3 CA0_A
FBB_CMD28 G11 CA1_A
FBB_CMD21 G4 CA2_A
FBB_CMD29 H12 CA3_A
FBB_CMD23 H5 CA4_A
FBB_CMD27 H10 CA5_A
FBB_CMD30 J12 CA6_A
FBB_CMD31 J11 CA7_A
FBB_CMD19 J4 CA8_A
FBB_CMD17 J3 CA9_A
FBB_CMD22 J5 CABI_A
FBB_CMD26 G10 CKE_A
FBB_CMD16 L3 CA0_B
FBB_CMD25 M11 CA1_B
FBB_CMD24 M4 CA2_B
FBB_CMD33 L12 CA3_B
FBB_CMD23 L5 CA4_B
FBB_CMD27 L10 CA5_B
FBB_CMD30 K12 CA6_B
FBB_CMD31 K11 CA7_B
FBB_CMD19 K4 CA8_B
FBB_CMD17 K3 CA9_B
FBB_CMD22 K5 CABI_B
FBB_CMD26 M10 CKE_B
FBB_CMD18 J1 RESET
FBB_CLK1* K10 CLK_c
FBB_CLK1 J10 CLK_t
VREFC K1 FBB_VREFC IN 8
C597 820pF 50V 10% X7R 0402 NO STUFF
GND
TCK N5 SNN_FBBU_TCK
TDI F10 SNN_FBBU_TDI
TDO N10 SNN_FBBU_TDO
TMS F5 SNN_FBBU_TMS
ZQ_A J14 FBB_ZQ_2_A
ZQ_B K14 FBB_ZQ_2_B
R510 121ohm 0402 1% COMMON
R504 121ohm 0402 1% COMMON
GND
RFU_A G5 SNN_FBBU_RFU_A
RFU_B M5 SNN_FBBU_RFU_B
FBVDDQ Close to DRAM
C545 10uF 6.3V 20% X5R 0603 COMMON
C568 10uF 6.3V 20% X5R 0603 COMMON
C249 10uF 6.3V 20% X5R 0603 COMMON
GND
FBVDDQ Close to DRAM
C505 10uF 6.3V 20% X5R 0603 NO STUFF
C644 10uF 6.3V 20% X5R 0603 NO STUFF
C530 10uF 6.3V 20% X5R 0603 NO STUFF
GND
FBVDDQ Close to DRAM
C518 1uF 6.3V 20% X5R 0201 NO STUFF
C572 1uF 6.3V 20% X5R 0201 NO STUFF
C542 1uF 6.3V 20% X5R 0201 NO STUFF
C674 1uF 6.3V 20% X5R 0201 NO STUFF
GND
FBVDDQ Around DRAM
C522 22uF 6.3V 20% X5R 0603W COMMON
C695 22uF 6.3V 20% X5R 0603W COMMON
C892 22uF 6.3V 20% X5R 0603W COMMON
GND
FBVDDQ Around DRAM
C647 22uF 6.3V 20% X5R 0603W NO STUFF
C693 22uF 6.3V 20% X5R 0603W NO STUFF
C565 22uF 6.3V 20% X5R 0603W NO STUFF
GND
FBVDDQ Right under DRAM
C260 1uF, C256 1uF, C541 1uF, C538 1uF, C636 1uF, C527 1uF, C585 1uF, C605 1uF — 6.3V 20% X5R 0201 COMMON
GND
FBVDDQ Right under DRAM
C621 1uF, C548 1uF, C648 1uF, C626 1uF, C574 1uF, C553 1uF, C521 1uF, C594 1uF — 6.3V 20% X5R 0201 COMMON
GND
FBVDDQ Close to DRAM
C602 1uF, C606 1uF, C598 1uF, C655 1uF, C643 1uF, C611 1uF, C580 1uF, C573 1uF, C501 1uF, C677 1uF — 6.3V 20% X5R 0201 COMMON
GND
FBVDDQ Close to DRAM
C263 1uF, C242 1uF, C252 1uF, C245 1uF, C562 1uF, C614 1uF, C629 1uF, C654 1uF, C673 1uF, C554 1uF — 6.3V 20% X5R 0201 COMMON
GND
1V8_AON
C683 1uF, C507 1uF, C689 1uF, C511 1uF — 6.3V 20% X5R 0201 COMMON
GND

ASSEMBLY	<ASSEMBLY_DESCRIPTION>
PAGE DETAIL	MEMORY: FBB[63:32]

ALL NVIDIA DESIGN SPECIFICATIONS, REFERENCE SPECIFICATIONS, REFERENCE BOARDS, FILES, DRAWINGS, DIAGNOSTICS, LISTS AND OTHER DOCUMENTS OR INFORMATION (TOGETHER AND SEPARATELY, 'MATERIALS') ARE BEING PROVIDED 'AS IS'. THE MATERIALS MAY CONTAIN KNOWN AND UNKNOWN VIOLATIONS OR DEVIATIONS OF INDUSTRY STANDARDS AND SPECIFICATIONS. NVIDIA MAKES NO WARRANTIES, EXPRESSED, IMPLIED, STATUTORY OR OTHERWISE WITH RESPECT TO THE MATERIALS OR OTHERWISE, AND EXPRESSLY DISCLAIMS ALL IMPLIED WARRANTIES INCLUDING, WITHOUT LIMITATION, THE WARRANTIES OF DESIGN, OF NONINFRINGEMENT, MERCHANTABILITY OR FITNESS FOR A PARTICULAR PURPOSE, OR ARISING FROM A COURSE OF DEALING, TRADE USAGE, TRADE PRACTICE, OR INDUSTRY STANDARDS.

RD Center
Colorful Co.,Ltd
深圳市七彩虹科技 发 展 有限 公 司

Size	Document Number	Rev
Custom	PG161H6-E10	A

Date: Wednesday, October 31, 2018 Sheet 9 of 53

Page10: MEMORY: GPU Partition C/D

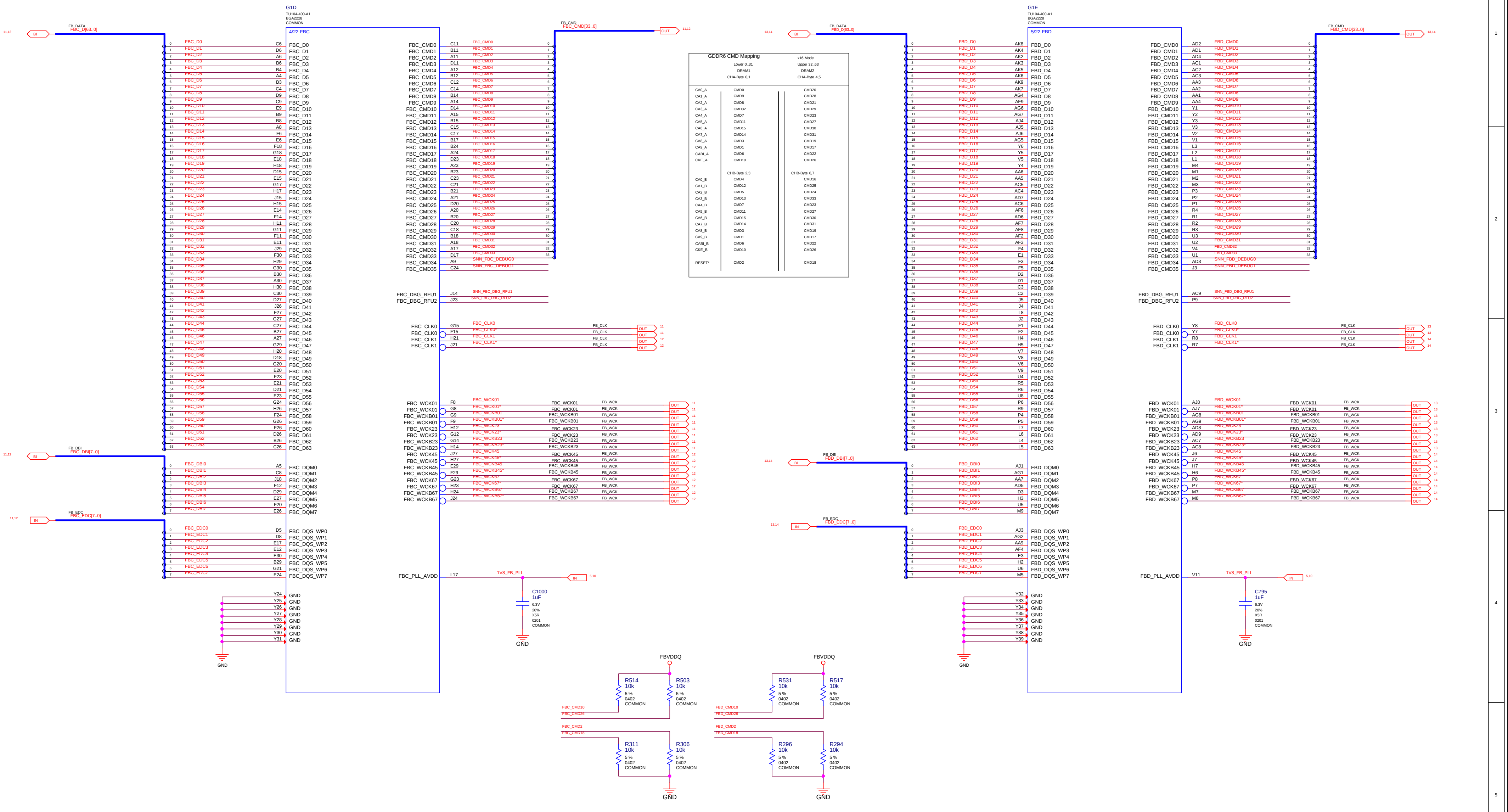
G1D
TU104-400-A1
BGA2228
COMMON
4/22 FBC
FB_DATA
FBC_D[63..0]
BI
11,12
FB_CMD
FBC_CMD[33..0]
OUT
FB_DBI
FBC_DBI[7..0]
FB_EDC
FBC_EDC[7..0]
IN
FBC_D0 … FBC_D63
FBC_CMD0 … FBC_CMD35
SNN_FBC_DEBUG0
SNN_FBC_DEBUG1
FBC_DBG_RFU1
FBC_DBG_RFU2
SNN_FBC_DBG_RFU1
SNN_FBC_DBG_RFU2
FBC_CLK0
FBC_CLK0*
FBC_CLK1
FBC_CLK1*
FB_CLK
FBC_WCK01
FBC_WCKB01
FBC_WCK23
FBC_WCKB23
FBC_WCK45
FBC_WCKB45
FBC_WCK67
FBC_WCKB67
FB_WCK
FBC_DQM0 … FBC_DQM7
FBC_DQS_WP0 … FBC_DQS_WP7
FBC_PLL_AVDD
L17
1V8_FB_PLL
5,10
C1000
1uF
6.3V
20%
X5R
0201
COMMON
GND
G1E
TU104-400-A1
BGA2228
COMMON
5/22 FBD
FBD_D[63..0]
13,14
FBD_CMD[33..0]
FBD_DBI[7..0]
FBD_EDC[7..0]
FBD_D0 … FBD_D63
FBD_CMD0 … FBD_CMD35
SNN_FBD_DEBUG0
SNN_FBD_DEBUG1
FBD_DBG_RFU1
FBD_DBG_RFU2
SNN_FBD_DBG_RFU1
SNN_FBD_DBG_RFU2
FBD_CLK0
FBD_CLK0*
FBD_CLK1
FBD_CLK1*
FBD_WCK01
FBD_WCKB01
FBD_WCK23
FBD_WCKB23
FBD_WCK45
FBD_WCKB45
FBD_WCK67
FBD_WCKB67
FBD_DQM0 … FBD_DQM7
FBD_DQS_WP0 … FBD_DQS_WP7
FBD_PLL_AVDD
V11
C795
1uF
6.3V
20%
X5R
0201
COMMON
FBVDDQ
R514 10k 5 % 0402 COMMON
R503 10k 5 % 0402 COMMON
R311 10k 5 % 0402 COMMON
R306 10k 5 % 0402 COMMON
FBC_CMD10
FBC_CMD26
FBC_CMD2
FBC_CMD18
R531 10k 5 % 0402 COMMON
R517 10k 5 % 0402 COMMON
R296 10k 5 % 0402 COMMON
R294 10k 5 % 0402 COMMON
FBD_CMD10
FBD_CMD26
FBD_CMD2
FBD_CMD18

GDDR6 CMD Mapping

	x16 Mode Lower 0..31 DRAM1 CHA-Byte 0,1	Upper 32..63 DRAM2 CHA-Byte 4,5
CA0_A	CMD0	CMD20
CA1_A	CMD9	CMD28
CA2_A	CMD8	CMD21
CA3_A	CMD32	CMD29
CA4_A	CMD7	CMD23
CA5_A	CMD11	CMD27
CA6_A	CMD15	CMD30
CA7_A	CMD14	CMD31
CA8_A	CMD3	CMD19
CA9_A	CMD1	CMD17
CABI_A	CMD6	CMD22
CKE_A	CMD10	CMD26
	CHB-Byte 2,3	CHB-Byte 6,7
CA0_B	CMD4	CMD16
CA1_B	CMD12	CMD25
CA2_B	CMD5	CMD24
CA3_B	CMD13	CMD33
CA4_B	CMD7	CMD23
CA5_B	CMD11	CMD27
CA6_B	CMD15	CMD30
CA7_B	CMD14	CMD31
CA8_B	CMD3	CMD19
CA9_B	CMD1	CMD17
CABI_B	CMD6	CMD22
CKE_B	CMD10	CMD26
RESET*	CMD2	CMD18

ASSEMBLY	<ASSEMBLY_DESCRIPTION>
PAGE DETAIL	MEMORY: GPU FB_CD

ALL NVIDIA DESIGN SPECIFICATIONS, REFERENCE SPECIFICATIONS, REFERENCE BOARDS, FILES, DRAWINGS, DIAGNOSTICS, LISTS AND OTHER DOCUMENTS OR INFORMATION (TOGETHER AND SEPARATELY, 'MATERIALS') ARE BEING PROVIDED 'AS IS'. THE MATERIALS MAY CONTAIN KNOWN AND UNKNOWN VIOLATIONS OR DEVIATIONS OF INDUSTRY STANDARDS AND SPECIFICATIONS. NVIDIA MAKES NO WARRANTIES, EXPRESSED, IMPLIED, STATUTORY OR OTHERWISE WITH RESPECT TO THE MATERIALS OR OTHERWISE, AND EXPRESSLY DISCLAIMS ALL IMPLIED WARRANTIES INCLUDING, WITHOUT LIMITATION, THE WARRANTIES OF DESIGN, OF NONINFRINGEMENT, MERCHANTABILITY OR FITNESS FOR A PARTICULAR PURPOSE, OR ARISING FROM A COURSE OF DEALING, TRADE USAGE, TRADE PRACTICE, OR INDUSTRY STANDARDS.

RD Center
Colorful Co.,Ltd
深圳市七彩虹科技发展有限公司

Size	Document Number	Rev
Custom	PG161H6-E10	A

Date: Wednesday, October 31, 2018 Sheet 10 of 53

Page11: MEMORY: FBC Partition 31..0

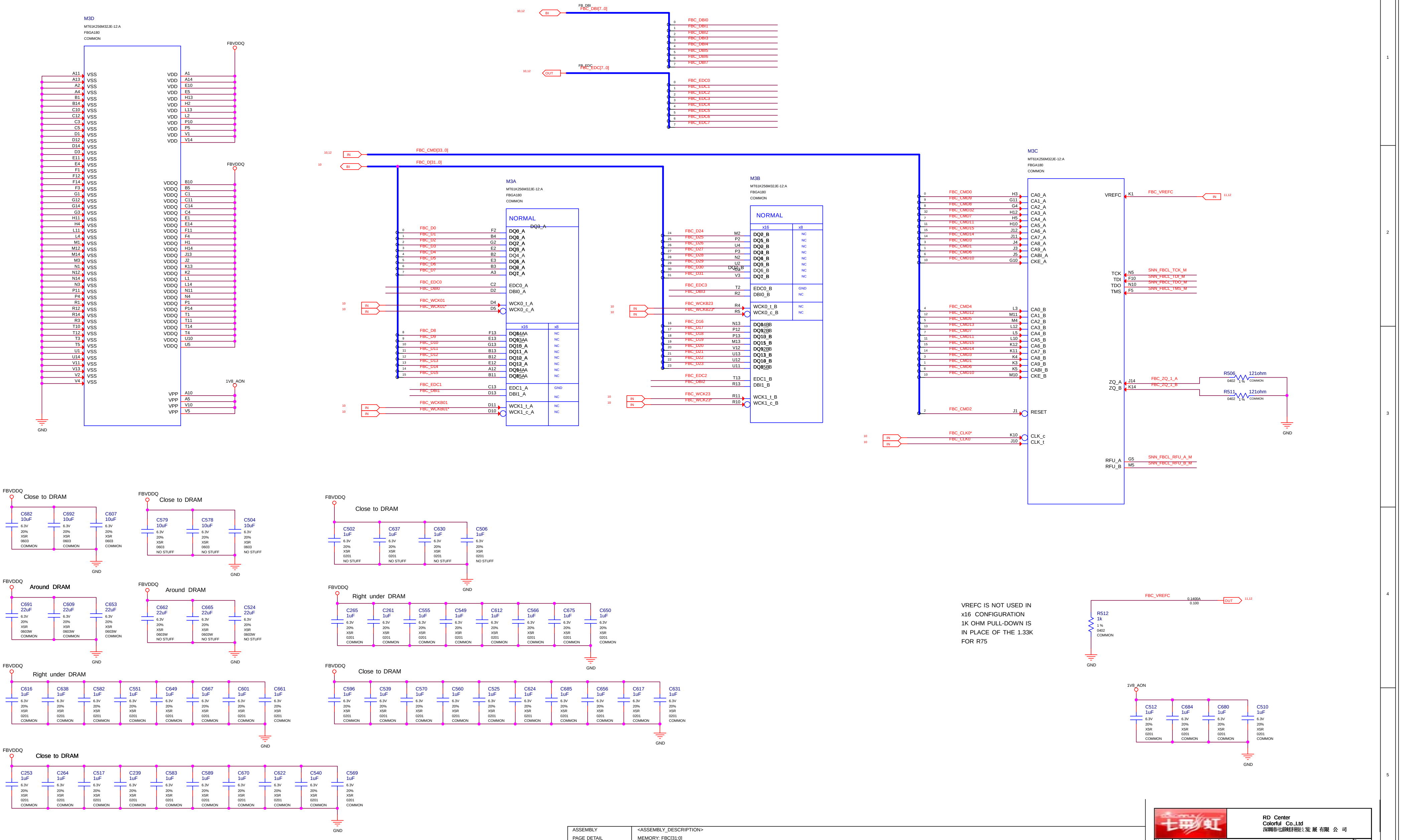
M3D
MT61K256M32JE-12:A
FBGA180
COMMON
A11 A13 A2 A4 B1 B14 C10 C12 C3 C5 D1 D12 D14 D3 E11 E4 F1 F12 F14 F3 G1 G12 G14 G3 H11 H4 L11 L4 M1 M12 M14 M3 N1 N12 N14 N3 P11 P4 R1 R12 R14 R3 T10 T12 T3 T5 U1 U14 V11 V13 V2 V4
VSS
VDD A1 A14 E10 E5 H13 H2 L13 L2 P10 P5 V1 V14
VDDQ B10 B5 C1 C11 C14 C4 E1 E14 F11 F4 H1 H14 J13 J2 K13 K2 L1 L14 N11 N4 P1 P14 T1 T11 T14 T4 U10 U5
VPP A10 A5 V10 V5
FBVDDQ
1V8_AON
GND
FB_DBI
FBC_DBI[7..0]
BI
10,12
FBC_DBI0 FBC_DBI1 FBC_DBI2 FBC_DBI3 FBC_DBI4 FBC_DBI5 FBC_DBI6 FBC_DBI7
FB_EDC
FBC_EDC[7..0]
OUT
FBC_EDC0 FBC_EDC1 FBC_EDC2 FBC_EDC3 FBC_EDC4 FBC_EDC5 FBC_EDC6 FBC_EDC7
FBC_CMD[33..0]
IN
FBC_D[31..0]
M3A
MT61K256M32JE-12:A
FBGA180
COMMON
NORMAL
FBC_D0 F2 DQ0_A
FBC_D1 B4 DQ1_A
FBC_D2 G2 DQ2_A
FBC_D3 E2 DQ3_A
FBC_D4 B2 DQ4_A
FBC_D5 E3 DQ5_A
FBC_D6 B3 DQ6_A
FBC_D7 A3 DQ7_A
FBC_EDC0 C2 EDC0_A
FBC_DBI0 D2 DBI0_A
FBC_WCK01 D4 WCK0_t_A
FBC_WCK01* D5 WCK0_c_A
x16 x8
FBC_D8 F13 DQ8_A
FBC_D9 E13 DQ9_A
FBC_D10 G13 DQ10_A
FBC_D11 B13 DQ11_A
FBC_D12 B12 DQ12_A
FBC_D13 E12 DQ13_A
FBC_D14 A12 DQ14_A
FBC_D15 B11 DQ15_A
NC
FBC_EDC1 C13 EDC1_A GND
FBC_DBI1 D13 DBI1_A
FBC_WCKB01 D11 WCK1_t_A
FBC_WCKB01* D10 WCK1_c_A
M3B
MT61K256M32JE-12:A
FBGA180
COMMON
NORMAL
x16 x8
FBC_D24 M2 DQ0_B
FBC_D25 P2 DQ1_B
FBC_D26 U4 DQ2_B
FBC_D27 P3 DQ3_B
FBC_D28 N2 DQ4_B
FBC_D29 U2 DQ5_B
FBC_D30 U3 DQ6_B
FBC_D31 V3 DQ7_B
FBC_EDC3 T2 EDC0_B GND
FBC_DBI3 R2 DBI0_B NC
FBC_WCKB23 R4 WCK0_t_B
FBC_WCKB23* R5 WCK0_c_B
FBC_D16 N13 DQ8_B
FBC_D17 P12 DQ9_B
FBC_D18 P13 DQ10_B
FBC_D19 M13 DQ11_B
FBC_D20 V12 DQ12_B
FBC_D21 U13 DQ13_B
FBC_D22 U12 DQ14_B
FBC_D23 U11 DQ15_B
FBC_EDC2 T13 EDC1_B
FBC_DBI2 R13 DBI1_B
FBC_WCK23 R11 WCK1_t_B
FBC_WCK23* R10 WCK1_c_B
M3C
MT61K256M32JE-12:A
FBGA180
COMMON
FBC_CMD0 H3 CA0_A
FBC_CMD9 G11 CA1_A
FBC_CMD8 G4 CA2_A
FBC_CMD32 H12 CA3_A
FBC_CMD7 H5 CA4_A
FBC_CMD11 H10 CA5_A
FBC_CMD15 J12 CA6_A
FBC_CMD14 J11 CA7_A
FBC_CMD3 J4 CA8_A
FBC_CMD1 J3 CA9_A
FBC_CMD6 J5 CABI_A
FBC_CMD10 G10 CKE_A
FBC_CMD4 L3 CA0_B
FBC_CMD12 M11 CA1_B
FBC_CMD5 M4 CA2_B
FBC_CMD13 L12 CA3_B
FBC_CMD7 L5 CA4_B
FBC_CMD11 L10 CA5_B
FBC_CMD15 K12 CA6_B
FBC_CMD14 K11 CA7_B
FBC_CMD3 K4 CA8_B
FBC_CMD1 K3 CA9_B
FBC_CMD6 K5 CABI_B
FBC_CMD10 M10 CKE_B
FBC_CMD2 J1 RESET
FBC_CLK0* K10 CLK_c
FBC_CLK0 J10 CLK_t
VREFC K1 FBC_VREFC IN 11,12
TCK N5 SNN_FBCL_TCK_M
TDI F10 SNN_FBCL_TDI_M
TDO N10 SNN_FBCL_TDO_M
TMS F5 SNN_FBCL_TMS_M
ZQ_A J14 FBC_ZQ_1_A
ZQ_B K14 FBC_ZQ_1_B
R506 121ohm 0402 1% COMMON
R511 121ohm 0402 1% COMMON
RFU_A G5 SNN_FBCL_RFU_A_M
RFU_B M5 SNN_FBCL_RFU_B_M
Close to DRAM
C682 10uF 6.3V 20% X5R 0603 COMMON
C692 10uF 6.3V 20% X5R 0603 COMMON
C607 10uF 6.3V 20% X5R 0603 COMMON
C579 10uF 6.3V 20% X5R 0603 NO STUFF
C578 10uF 6.3V 20% X5R 0603 NO STUFF
C504 10uF 6.3V 20% X5R 0603 NO STUFF
C502 1uF 6.3V 20% X5R 0201 NO STUFF
C637 1uF 6.3V 20% X5R 0201 NO STUFF
C630 1uF 6.3V 20% X5R 0201 NO STUFF
C506 1uF 6.3V 20% X5R 0201 NO STUFF
Around DRAM
C691 22uF 6.3V 20% X5R 0603W COMMON
C609 22uF 6.3V 20% X5R 0603W COMMON
C653 22uF 6.3V 20% X5R 0603W COMMON
C662 22uF 6.3V 20% X5R 0603W NO STUFF
C665 22uF 6.3V 20% X5R 0603W NO STUFF
C524 22uF 6.3V 20% X5R 0603W NO STUFF
Right under DRAM
C265 C261 C555 C549 C612 C566 C675 C650 1uF 6.3V 20% X5R 0201 COMMON
C616 C638 C582 C551 C649 C667 C601 C661 1uF 6.3V 20% X5R 0201 COMMON
C596 C539 C570 C560 C525 C624 C685 C656 C617 C631 1uF 6.3V 20% X5R 0201 COMMON
C253 C264 C517 C239 C583 C589 C670 C622 C540 C569 1uF 6.3V 20% X5R 0201 COMMON
FBC_VREFC 0.1400A 0.100 OUT 11,12
R512 1k 1% 0402 COMMON
C512 C684 C680 C510 1uF 6.3V 20% X5R 0201 COMMON

VREFC IS NOT USED IN
x16 CONFIGURATION
1K OHM PULL-DOWN IS
IN PLACE OF THE 1.33K
FOR R75

ASSEMBLY	<ASSEMBLY_DESCRIPTION>
PAGE DETAIL	MEMORY: FBC[31:0]

ALL NVIDIA DESIGN SPECIFICATIONS, REFERENCE SPECIFICATIONS, REFERENCE BOARDS, FILES, DRAWINGS, DIAGNOSTICS, LISTS AND OTHER DOCUMENTS OR INFORMATION (TOGETHER AND SEPARATELY, 'MATERIALS') ARE BEING PROVIDED 'AS IS'. THE MATERIALS MAY CONTAIN KNOWN AND UNKNOWN VIOLATIONS OR DEVIATIONS OF INDUSTRY STANDARDS AND SPECIFICATIONS. NVIDIA MAKES NO WARRANTIES, EXPRESSED, IMPLIED, STATUTORY OR OTHERWISE WITH RESPECT TO THE MATERIALS OR OTHERWISE, AND EXPRESSLY DISCLAIMS ALL IMPLIED WARRANTIES INCLUDING, WITHOUT LIMITATION, THE WARRANTIES OF DESIGN, OF NONINFRINGEMENT, MERCHANTABILITY OR FITNESS FOR A PARTICULAR PURPOSE, OR ARISING FROM A COURSE OF DEALING, TRADE USAGE, TRADE PRACTICE, OR INDUSTRY STANDARDS.

RD Center
Colorful Co.,Ltd
深圳市七彩虹科技发展有限公司

Size Custom
Document Number PG161H6-E10
Rev A
Date: Wednesday, October 31, 2018
Sheet 11 of 53

Page12: MEMORY: FBC Partition 63..32

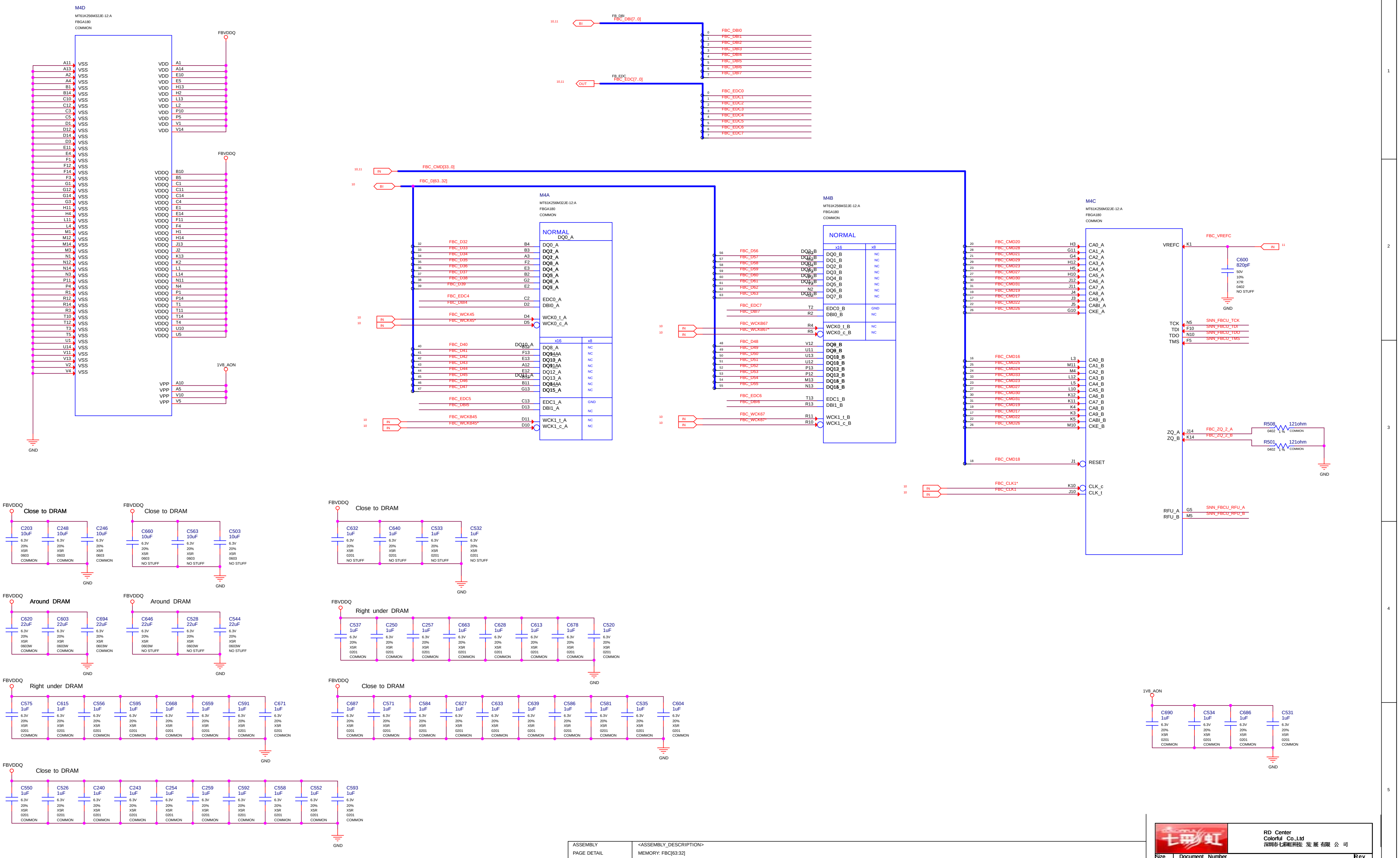
M4D
MT61K256M32JE-12:A
FBGA180
COMMON
VSS: A11, A13, A2, A4, B1, B14, C10, C12, C3, C5, D1, D12, D14, D3, E11, E4, F1, F12, F14, F3, G1, G12, G14, G3, H11, H4, L11, L4, M1, M12, M14, M3, N1, N12, N14, N3, P11, P4, R1, R12, R14, R3, T10, T12, T3, T5, U1, U14, V11, V13, V2, V4
GND
FBVDDQ
VDD: A1, A14, E10, E5, H13, H2, L13, L2, P10, P5, V1, V14
FBVDDQ
VDDQ: B10, B5, C1, C11, C14, C4, E1, E14, F11, F4, H1, H14, J13, J2, K13, K2, L1, L14, N11, N4, P1, P14, T1, T11, T14, T4, U10, U5
1V8_AON
VPP: A10, A5, V10, V5
10,11 BI FB_DBI FBC_DBI[7..0]
FBC_DBI0 FBC_DBI1 FBC_DBI2 FBC_DBI3 FBC_DBI4 FBC_DBI5 FBC_DBI6 FBC_DBI7
10,11 OUT FB_EDC FBC_EDC[7..0]
FBC_EDC0 FBC_EDC1 FBC_EDC2 FBC_EDC3 FBC_EDC4 FBC_EDC5 FBC_EDC6 FBC_EDC7
10,11 IN FBC_CMD[33..0]
10 BI FBC_D[63..32]
M4A
MT61K256M32JE-12:A
FBGA180
COMMON
NORMAL
FBC_D32 B4 DQ0_A
FBC_D33 B3 DQ1_A
FBC_D34 A3 DQ2_A
FBC_D35 F2 DQ3_A
FBC_D36 E3 DQ4_A
FBC_D37 B2 DQ5_A
FBC_D38 G2 DQ6_A
FBC_D39 E2 DQ7_A
FBC_EDC4 C2 EDC0_A
FBC_DBI4 D2 DBI0_A
10 IN FBC_WCK45 D4 WCK0_t_A
10 IN FBC_WCK45* D5 WCK0_c_A
x16 x8
FBC_D40 B12 DQ8_A
FBC_D41 F13 DQ9_A
FBC_D42 E13 DQ10_A
FBC_D43 A12 DQ11_A
FBC_D44 E12 DQ12_A
FBC_D45 B13 DQ13_A
FBC_D46 B11 DQ14_A
FBC_D47 G13 DQ15_A
FBC_EDC5 C13 EDC1_A GND
FBC_DBI5 D13 DBI1_A NC
10 IN FBC_WCKB45 D11 WCK1_t_A NC
10 IN FBC_WCKB45* D10 WCK1_c_A NC
M4B
MT61K256M32JE-12:A
FBGA180
COMMON
NORMAL
x16 x8
FBC_D56 DQ0_B NC
FBC_D57 M2 DQ1_B NC
FBC_D58 U4 DQ2_B NC
FBC_D59 P3 DQ3_B NC
FBC_D60 P2 DQ4_B NC
FBC_D61 V3 DQ5_B NC
FBC_D62 N2 DQ6_B NC
FBC_D63 U2 DQ7_B NC
FBC_EDC7 T2 EDC0_B GND
FBC_DBI7 R2 DBI0_B NC
10 IN FBC_WCKB67 R4 WCK0_t_B NC
10 IN FBC_WCKB67* R5 WCK0_c_B NC
FBC_D48 V12 DQ8_B
FBC_D49 U11 DQ9_B
FBC_D50 U13 DQ10_B
FBC_D51 U12 DQ11_B
FBC_D52 P13 DQ12_B
FBC_D53 P12 DQ13_B
FBC_D54 M13 DQ14_B
FBC_D55 N13 DQ15_B
FBC_EDC6 T13 EDC1_B
FBC_DBI6 R13 DBI1_B
10 IN FBC_WCK67 R11 WCK1_t_B
10 IN FBC_WCK67* R10 WCK1_c_B
M4C
MT61K256M32JE-12:A
FBGA180
COMMON
FBC_CMD20 H3 CA0_A
FBC_CMD28 G11 CA1_A
FBC_CMD21 G4 CA2_A
FBC_CMD29 H12 CA3_A
FBC_CMD23 H5 CA4_A
FBC_CMD27 H10 CA5_A
FBC_CMD30 J12 CA6_A
FBC_CMD31 J11 CA7_A
FBC_CMD19 J4 CA8_A
FBC_CMD17 J3 CA9_A
FBC_CMD22 J5 CABI_A
FBC_CMD26 G10 CKE_A
FBC_CMD16 L3 CA0_B
FBC_CMD25 M11 CA1_B
FBC_CMD24 M4 CA2_B
FBC_CMD33 L12 CA3_B
FBC_CMD23 L5 CA4_B
FBC_CMD27 L10 CA5_B
FBC_CMD30 K12 CA6_B
FBC_CMD31 K11 CA7_B
FBC_CMD19 K4 CA8_B
FBC_CMD17 K3 CA9_B
FBC_CMD22 K5 CABI_B
FBC_CMD26 M10 CKE_B
FBC_CMD18 J1 RESET
10 IN FBC_CLK1* K10 CLK_c
10 IN FBC_CLK1 J10 CLK_t
VREFC K1 FBC_VREFC IN 11
C600 820pF 50V 10% X7R 0402 NO STUFF
GND
TCK N5 SNN_FBCU_TCK
TDI F10 SNN_FBCU_TDI
TDO N10 SNN_FBCU_TDO
TMS F5 SNN_FBCU_TMS
ZQ_A J14 FBC_ZQ_2_A
ZQ_B K14 FBC_ZQ_2_B
R508 121ohm 0402 1 % COMMON
R501 121ohm 0402 1 % COMMON
GND
RFU_A G5 SNN_FBCU_RFU_A
RFU_B M5 SNN_FBCU_RFU_B
FBVDDQ Close to DRAM
C203 10uF 6.3V 20% X5R 0603 COMMON
C248 10uF 6.3V 20% X5R 0603 COMMON
C246 10uF 6.3V 20% X5R 0603 COMMON
GND
FBVDDQ Close to DRAM
C660 10uF 6.3V 20% X5R 0603 NO STUFF
C563 10uF 6.3V 20% X5R 0603 NO STUFF
C503 10uF 6.3V 20% X5R 0603 NO STUFF
GND
FBVDDQ Close to DRAM
C632 1uF 6.3V 20% X5R 0201 NO STUFF
C640 1uF 6.3V 20% X5R 0201 NO STUFF
C533 1uF 6.3V 20% X5R 0201 NO STUFF
C532 1uF 6.3V 20% X5R 0201 NO STUFF
GND
FBVDDQ Around DRAM
C620 22uF 6.3V 20% X5R 0603W COMMON
C603 22uF 6.3V 20% X5R 0603W COMMON
C694 22uF 6.3V 20% X5R 0603W COMMON
GND
FBVDDQ Around DRAM
C646 22uF 6.3V 20% X5R 0603W NO STUFF
C528 22uF 6.3V 20% X5R 0603W NO STUFF
C544 22uF 6.3V 20% X5R 0603W NO STUFF
GND
FBVDDQ Right under DRAM
C537, C250, C257, C663, C628, C613, C678, C520 1uF 6.3V 20% X5R 0201 COMMON
GND
FBVDDQ Right under DRAM
C575, C615, C556, C595, C668, C659, C591, C671 1uF 6.3V 20% X5R 0201 COMMON
GND
FBVDDQ Close to DRAM
C687, C571, C584, C627, C633, C639, C586, C581, C535, C604 1uF 6.3V 20% X5R 0201 COMMON
GND
FBVDDQ Close to DRAM
C550, C526, C240, C243, C254, C259, C592, C558, C552, C593 1uF 6.3V 20% X5R 0201 COMMON
GND
1V8_AON
C690, C534, C686, C531 1uF 6.3V 20% X5R 0201 COMMON
GND

ASSEMBLY	<ASSEMBLY_DESCRIPTION>
PAGE DETAIL	MEMORY: FBC[63:32]

ALL NVIDIA DESIGN SPECIFICATIONS, REFERENCE SPECIFICATIONS, REFERENCE BOARDS, FILES, DRAWINGS, DIAGNOSTICS, LISTS AND OTHER DOCUMENTS OR INFORMATION (TOGETHER AND SEPARATELY, 'MATERIALS') ARE BEING PROVIDED 'AS IS'. THE MATERIALS MAY CONTAIN KNOWN AND UNKNOWN VIOLATIONS OR DEVIATIONS OF INDUSTRY STANDARDS AND SPECIFICATIONS. NVIDIA MAKES NO WARRANTIES, EXPRESSED, IMPLIED, STATUTORY OR OTHERWISE WITH RESPECT TO THE MATERIALS OR OTHERWISE, AND EXPRESSLY DISCLAIMS ALL IMPLIED WARRANTIES INCLUDING, WITHOUT LIMITATION, THE WARRANTIES OF DESIGN, OF NONINFRINGEMENT, MERCHANTABILITY OR FITNESS FOR A PARTICULAR PURPOSE, OR ARISING FROM A COURSE OF DEALING, TRADE USAGE, TRADE PRACTICE, OR INDUSTRY STANDARDS.

RD Center
Colorful Co.,Ltd
深圳市七彩虹科技 发 展 有限 公 司

Size	Document Number	Rev
Custom	PG161H6-E10	A

Date: Wednesday, October 31, 2018 Sheet 12 of 53

Page13: MEMORY: FBD Partition 31..0

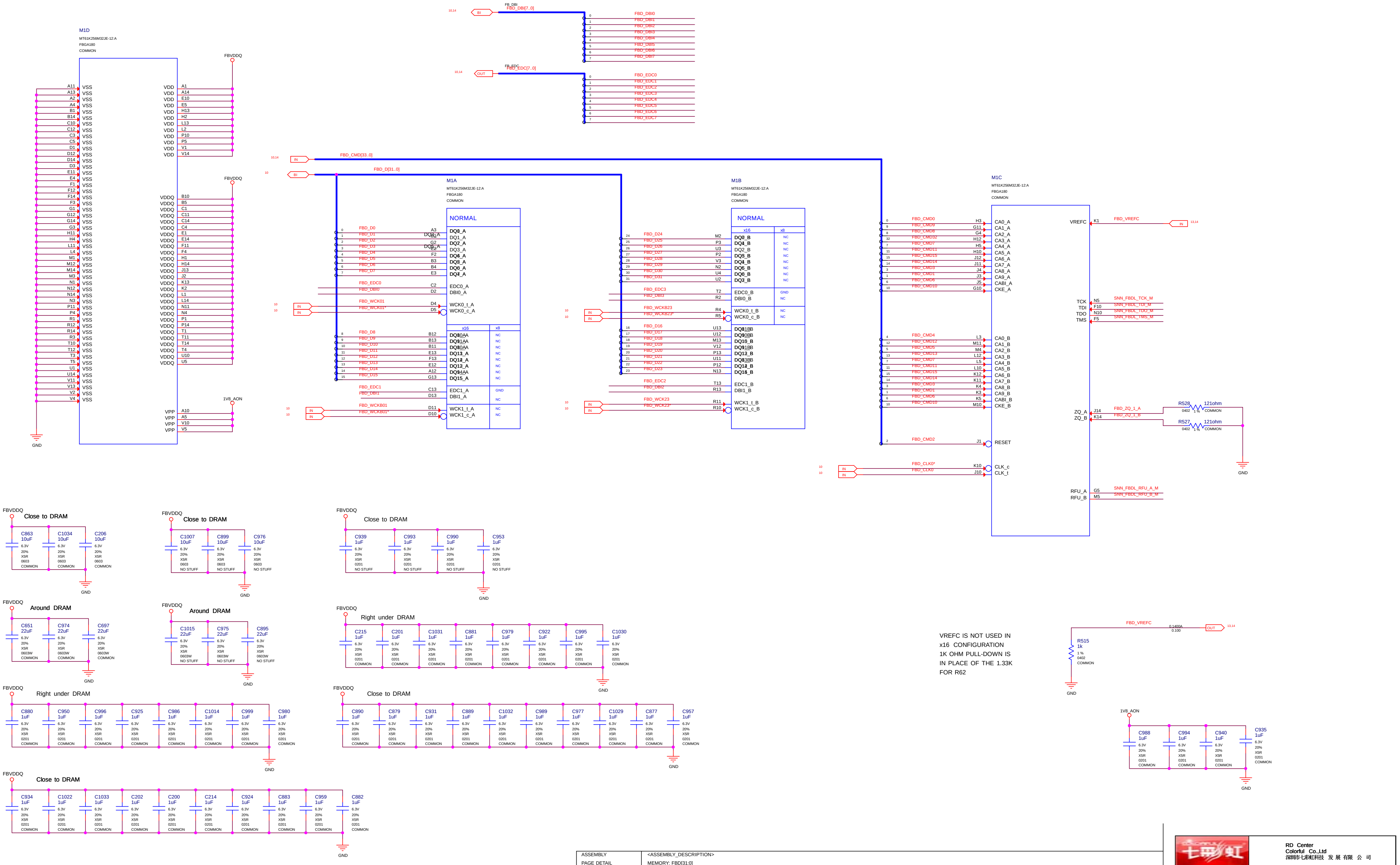
M1D
MT61K256M32JE-12:A
FBGA180
COMMON
FBVDDQ
VSS
VDD
VDDQ
VPP
1V8_AON
GND
FB_DBI
FBD_DBI[7..0]
FBD_DBI0
FBD_DBI1
FBD_DBI2
FBD_DBI3
FBD_DBI4
FBD_DBI5
FBD_DBI6
FBD_DBI7
FB_EDC
FBD_EDC[7..0]
FBD_EDC0
FBD_EDC1
FBD_EDC2
FBD_EDC3
FBD_EDC4
FBD_EDC5
FBD_EDC6
FBD_EDC7
FBD_CMD[33..0]
FBD_D[31..0]
BI
OUT
IN
M1A
M1B
M1C
NORMAL
x16
x8
NC
DQ0_A
DQ1_A
DQ2_A
DQ3_A
DQ4_A
DQ5_A
DQ6_A
DQ7_A
EDC0_A
DBI0_A
WCK0_t_A
WCK0_c_A
DQ8_A
DQ9_A
DQ10_A
DQ11_A
DQ12_A
DQ13_A
DQ14_A
DQ15_A
EDC1_A
DBI1_A
WCK1_t_A
WCK1_c_A
FBD_D0
FBD_D1
FBD_D2
FBD_D3
FBD_D4
FBD_D5
FBD_D6
FBD_D7
FBD_EDC0
FBD_DBI0
FBD_WCK01
FBD_WCK01*
FBD_D8
FBD_D9
FBD_D10
FBD_D11
FBD_D12
FBD_D13
FBD_D14
FBD_D15
FBD_EDC1
FBD_DBI1
FBD_WCKB01
FBD_WCKB01*
DQ0_B
DQ1_B
DQ2_B
DQ3_B
DQ4_B
DQ5_B
DQ6_B
DQ7_B
EDC0_B
DBI0_B
WCK0_t_B
WCK0_c_B
DQ8_B
DQ9_B
DQ10_B
DQ11_B
DQ12_B
DQ13_B
DQ14_B
DQ15_B
EDC1_B
DBI1_B
WCK1_t_B
WCK1_c_B
FBD_D24
FBD_D25
FBD_D26
FBD_D27
FBD_D28
FBD_D29
FBD_D30
FBD_D31
FBD_EDC3
FBD_DBI3
FBD_WCKB23
FBD_WCKB23*
FBD_D16
FBD_D17
FBD_D18
FBD_D19
FBD_D20
FBD_D21
FBD_D22
FBD_D23
FBD_EDC2
FBD_DBI2
FBD_WCK23
FBD_WCK23*
CA0_A
CA1_A
CA2_A
CA3_A
CA4_A
CA5_A
CA6_A
CA7_A
CA8_A
CA9_A
CABI_A
CKE_A
CA0_B
CA1_B
CA2_B
CA3_B
CA4_B
CA5_B
CA6_B
CA7_B
CA8_B
CA9_B
CABI_B
CKE_B
FBD_CMD0
FBD_CMD9
FBD_CMD8
FBD_CMD32
FBD_CMD7
FBD_CMD11
FBD_CMD15
FBD_CMD14
FBD_CMD3
FBD_CMD1
FBD_CMD6
FBD_CMD10
FBD_CMD4
FBD_CMD12
FBD_CMD5
FBD_CMD13
FBD_CMD2
RESET
FBD_CLK0*
FBD_CLK0
CLK_c
CLK_t
VREFC
FBD_VREFC
TCK
TDI
TDO
TMS
SNN_FBDL_TCK_M
SNN_FBDL_TDI_M
SNN_FBDL_TDO_M
SNN_FBDL_TMS_M
ZQ_A
ZQ_B
FBD_ZQ_1_A
FBD_ZQ_1_B
R528
121ohm
R527
121ohm
0402
1 %
RFU_A
RFU_B
SNN_FBDL_RFU_A_M
SNN_FBDL_RFU_B_M
Close to DRAM
Around DRAM
Right under DRAM
C863 10uF
C1034 10uF
C206 10uF
C1007 10uF
C899 10uF
C976 10uF
C939 1uF
C993 1uF
C990 1uF
C953 1uF
C651 22uF
C974 22uF
C697 22uF
C1015 22uF
C975 22uF
C895 22uF
C215 1uF
C201 1uF
C1031 1uF
C881 1uF
C979 1uF
C922 1uF
C995 1uF
C1030 1uF
C880 1uF
C950 1uF
C996 1uF
C925 1uF
C986 1uF
C1014 1uF
C999 1uF
C980 1uF
C890 1uF
C879 1uF
C931 1uF
C889 1uF
C1032 1uF
C989 1uF
C977 1uF
C1029 1uF
C877 1uF
C957 1uF
C934 1uF
C1022 1uF
C1033 1uF
C202 1uF
C200 1uF
C214 1uF
C924 1uF
C883 1uF
C959 1uF
C882 1uF
C988 1uF
C994 1uF
C940 1uF
C935 1uF
6.3V
20%
X5R
0603
0603W
0201
NO STUFF
R515
1k
0.1400A
0.100

VREFC IS NOT USED IN
x16 CONFIGURATION
1K OHM PULL-DOWN IS
IN PLACE OF THE 1.33K
FOR R62

ASSEMBLY	<ASSEMBLY_DESCRIPTION>
PAGE DETAIL	MEMORY: FBD[31:0]

RD Center
Colorful Co.,Ltd
深圳市七彩虹科技 发 展 有限 公 司

Size	Document Number	Rev
Custom	PG161H6-E10	A

Date: Wednesday, October 31, 2018 Sheet 13 of 53

ALL NVIDIA DESIGN SPECIFICATIONS, REFERENCE SPECIFICATIONS, REFERENCE BOARDS, FILES, DRAWINGS, DIAGNOSTICS, LISTS AND OTHER DOCUMENTS OR INFORMATION (TOGETHER AND SEPARATELY, 'MATERIALS') ARE BEING PROVIDED 'AS IS'. THE MATERIALS MAY CONTAIN KNOWN AND UNKNOWN VIOLATIONS OR DEVIATIONS OF INDUSTRY STANDARDS AND SPECIFICATIONS. NVIDIA MAKES NO WARRANTIES, EXPRESSED, IMPLIED, STATUTORY OR OTHERWISE WITH RESPECT TO THE MATERIALS OR OTHERWISE, AND EXPRESSLY DISCLAIMS ALL IMPLIED WARRANTIES INCLUDING, WITHOUT LIMITATION, THE WARRANTIES OF DESIGN, OF NONINFRINGEMENT, MERCHANTABILITY OR FITNESS FOR A PARTICULAR PURPOSE, OR ARISING FROM A COURSE OF DEALING, USAGE OF TRADE, TRADE PRACTICE, OR INDUSTRY STANDARDS.

Page14: MEMORY: FBD Partition 63..32

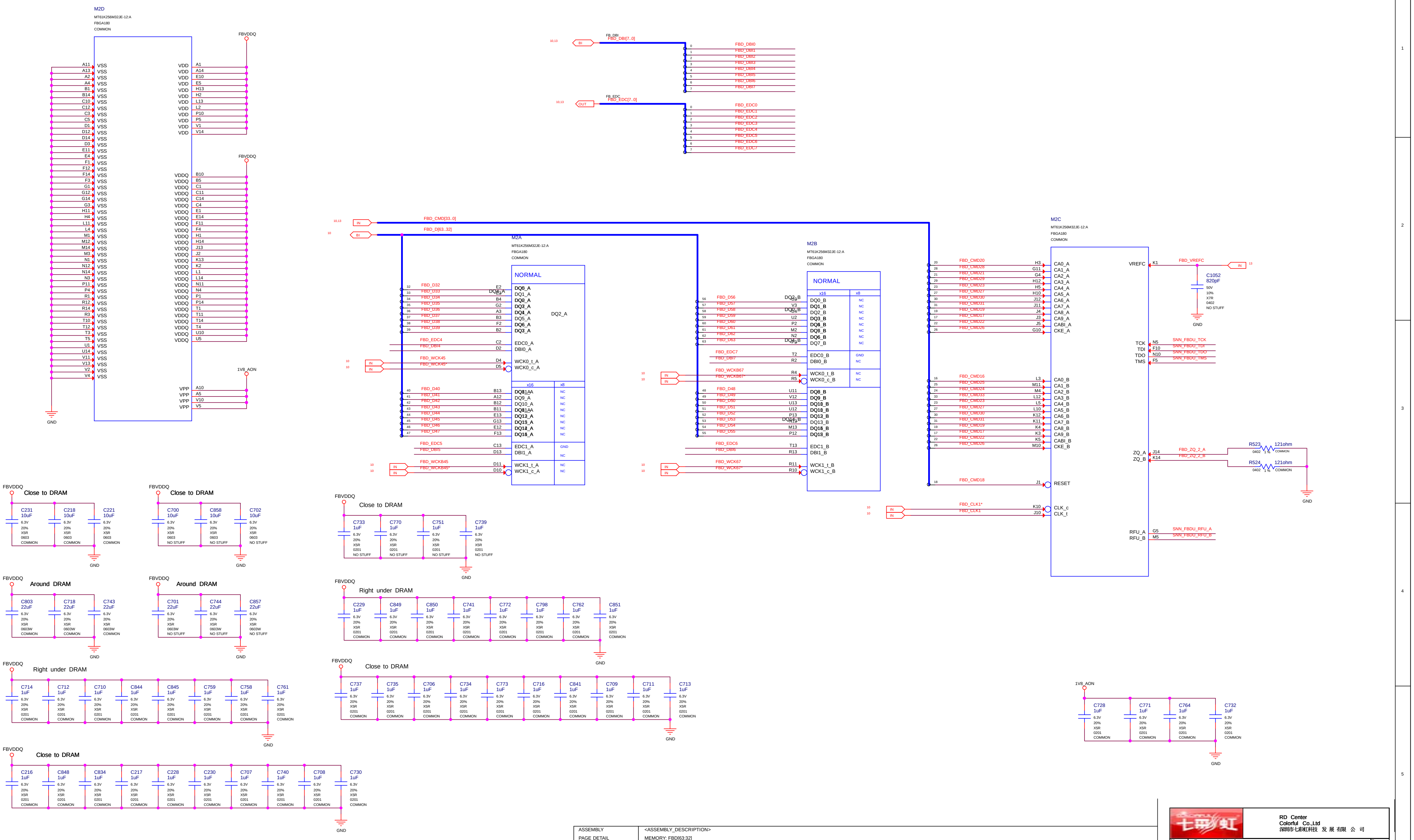
M2D
MT61K256M32JE-12:A
FBGA180
COMMON
VSS: A11 A13 A2 A4 B1 B14 C10 C12 C3 C5 D1 D12 D14 D3 E11 E4 F1 F12 F14 F3 G1 G12 G14 G3 H11 H4 L11 L4 M1 M12 M14 M3 N1 N12 N14 N3 P11 P4 R1 R12 R14 R3 T10 T12 T3 T5 U1 U14 V11 V13 V2 V4
GND
FBVDDQ
VDD: A1 A14 E10 E5 H13 H2 L13 L2 P10 P5 V1 V14
VDDQ: B10 B5 C1 C11 C14 C4 E1 E14 F11 F4 H1 H14 J13 J2 K13 K2 L1 L14 N11 N4 P1 P14 T1 T11 T14 T4 U10 U5
1V8_AON
VPP: A10 A5 V10 V5
10,13 BI FB_DBI FBD_DBI[7..0]
FBD_DBI0 FBD_DBI1 FBD_DBI2 FBD_DBI3 FBD_DBI4 FBD_DBI5 FBD_DBI6 FBD_DBI7
10,13 OUT FB_EDC FBD_EDC[7..0]
FBD_EDC0 FBD_EDC1 FBD_EDC2 FBD_EDC3 FBD_EDC4 FBD_EDC5 FBD_EDC6 FBD_EDC7
10,13 IN FBD_CMD[33..0]
10 BI FBD_D[63..32]
M2A
MT61K256M32JE-12:A
FBGA180
COMMON
NORMAL
FBD_D32–FBD_D39: E2 E3 B4 G2 A3 B3 F2 B2 — DQ0_A–DQ7_A
DQ2_A
FBD_EDC4 C2 EDC0_A
FBD_DBI4 D2 DBI0_A
10 IN FBD_WCK45 D4 WCK0_t_A
10 IN FBD_WCK45* D5 WCK0_c_A
x16 x8
FBD_D40–FBD_D47: B13 A12 B12 B11 E13 G13 E12 F13 — DQ8_A–DQ15_A NC
FBD_EDC5 C13 EDC1_A GND
FBD_DBI5 D13 DBI1_A NC
10 IN FBD_WCKB45 D11 WCK1_t_A NC
10 IN FBD_WCKB45* D10 WCK1_c_A NC
M2B
MT61K256M32JE-12:A
FBGA180
COMMON
NORMAL
x16 x8
FBD_D56–FBD_D63: U3 V3 U4 U2 P2 M2 N2 P3 — DQ0_B–DQ7_B NC
FBD_EDC7 T2 EDC0_B GND
FBD_DBI7 R2 DBI0_B NC
10 IN FBD_WCKB67 R4 WCK0_t_B NC
10 IN FBD_WCKB67* R5 WCK0_c_B NC
FBD_D48–FBD_D55: U11 V12 U13 U12 P13 N13 M13 P12 — DQ8_B–DQ15_B
FBD_EDC6 T13 EDC1_B
FBD_DBI6 R13 DBI1_B
10 IN FBD_WCK67 R11 WCK1_t_B
10 IN FBD_WCK67* R10 WCK1_c_B
M2C
MT61K256M32JE-12:A
FBGA180
COMMON
FBD_CMD20 H3 CA0_A
FBD_CMD28 G11 CA1_A
FBD_CMD21 G4 CA2_A
FBD_CMD29 H12 CA3_A
FBD_CMD23 H5 CA4_A
FBD_CMD27 H10 CA5_A
FBD_CMD30 J12 CA6_A
FBD_CMD31 J11 CA7_A
FBD_CMD19 J4 CA8_A
FBD_CMD17 J3 CA9_A
FBD_CMD22 J5 CABI_A
FBD_CMD26 G10 CKE_A
FBD_CMD16 L3 CA0_B
FBD_CMD25 M11 CA1_B
FBD_CMD24 M4 CA2_B
FBD_CMD33 L12 CA3_B
FBD_CMD23 L5 CA4_B
FBD_CMD27 L10 CA5_B
FBD_CMD30 K12 CA6_B
FBD_CMD31 K11 CA7_B
FBD_CMD19 K4 CA8_B
FBD_CMD17 K3 CA9_B
FBD_CMD22 K5 CABI_B
FBD_CMD26 M10 CKE_B
FBD_CMD18 J1 RESET
10 IN FBD_CLK1* K10 CLK_c
10 IN FBD_CLK1 J10 CLK_t
VREFC K1 FBD_VREFC IN 13
C1052 820pF 50V 10% X7R 0402 NO STUFF
GND
TCK N5 SNN_FBDU_TCK
TDI F10 SNN_FBDU_TDI
TDO N10 SNN_FBDU_TDO
TMS F5 SNN_FBDU_TMS
ZQ_A J14 FBD_ZQ_2_A
ZQ_B K14 FBD_ZQ_2_B
R523 121ohm 0402 1% COMMON
R524 121ohm 0402 1% COMMON
GND
RFU_A G5 SNN_FBDU_RFU_A
RFU_B M5 SNN_FBDU_RFU_B
FBVDDQ Close to DRAM
C231 10uF 6.3V 20% X5R 0603 COMMON
C218 10uF 6.3V 20% X5R 0603 COMMON
C221 10uF 6.3V 20% X5R 0603 COMMON
GND
FBVDDQ Close to DRAM
C700 10uF 6.3V 20% X5R 0603 NO STUFF
C858 10uF 6.3V 20% X5R 0603 NO STUFF
C702 10uF 6.3V 20% X5R 0603 NO STUFF
GND
FBVDDQ Close to DRAM
C733 1uF 6.3V 20% X5R 0201 NO STUFF
C770 1uF 6.3V 20% X5R 0201 NO STUFF
C751 1uF 6.3V 20% X5R 0201 NO STUFF
C739 1uF 6.3V 20% X5R 0201 NO STUFF
GND
FBVDDQ Around DRAM
C803 22uF 6.3V 20% X5R 0603W COMMON
C718 22uF 6.3V 20% X5R 0603W COMMON
C743 22uF 6.3V 20% X5R 0603W COMMON
GND
FBVDDQ Around DRAM
C701 22uF 6.3V 20% X5R 0603W NO STUFF
C744 22uF 6.3V 20% X5R 0603W NO STUFF
C857 22uF 6.3V 20% X5R 0603W NO STUFF
GND
FBVDDQ Right under DRAM
C229 C849 C850 C741 C772 C798 C762 C851 1uF 6.3V 20% X5R 0201 COMMON
GND
FBVDDQ Right under DRAM
C714 C712 C710 C844 C845 C759 C758 C761 1uF 6.3V 20% X5R 0201 COMMON
GND
FBVDDQ Close to DRAM
C737 C735 C706 C734 C773 C716 C841 C709 C711 C713 1uF 6.3V 20% X5R 0201 COMMON
GND
FBVDDQ Close to DRAM
C216 C848 C834 C217 C228 C230 C707 C740 C708 C730 1uF 6.3V 20% X5R 0201 COMMON
GND
1V8_AON
C728 C771 C764 C732 1uF 6.3V 20% X5R 0201 COMMON
GND

ASSEMBLY	<ASSEMBLY_DESCRIPTION>
PAGE DETAIL	MEMORY: FBD[63:32]

ALL NVIDIA DESIGN SPECIFICATIONS, REFERENCE SPECIFICATIONS, REFERENCE BOARDS, FILES, DRAWINGS, DIAGNOSTICS, LISTS AND OTHER DOCUMENTS OR INFORMATION (TOGETHER AND SEPARATELY, 'MATERIALS') ARE BEING PROVIDED 'AS IS'. THE MATERIALS MAY CONTAIN KNOWN AND UNKNOWN VIOLATIONS OR DEVIATIONS OF INDUSTRY STANDARDS AND SPECIFICATIONS. NVIDIA MAKES NO WARRANTIES, EXPRESSED, IMPLIED, STATUTORY OR OTHERWISE WITH RESPECT TO THE MATERIALS OR OTHERWISE, AND EXPRESSLY DISCLAIMS ALL IMPLIED WARRANTIES INCLUDING, WITHOUT LIMITATION, THE WARRANTIES OF DESIGN, OF NONINFRINGEMENT, MERCHANTABILITY OR FITNESS FOR A PARTICULAR PURPOSE, OR ARISING FROM A COURSE OF DEALING, TRADE USAGE, TRADE PRACTICE, OR INDUSTRY STANDARDS.

RD Center
Colorful Co.,Ltd
深圳市七彩虹科技 发 展 有限 公 司

Size	Document Number	Rev
Custom	PG161H6-E10	A
Date: Wednesday, October 31, 2018	Sheet 14 of 53	

Page15: GPU PWR and GND

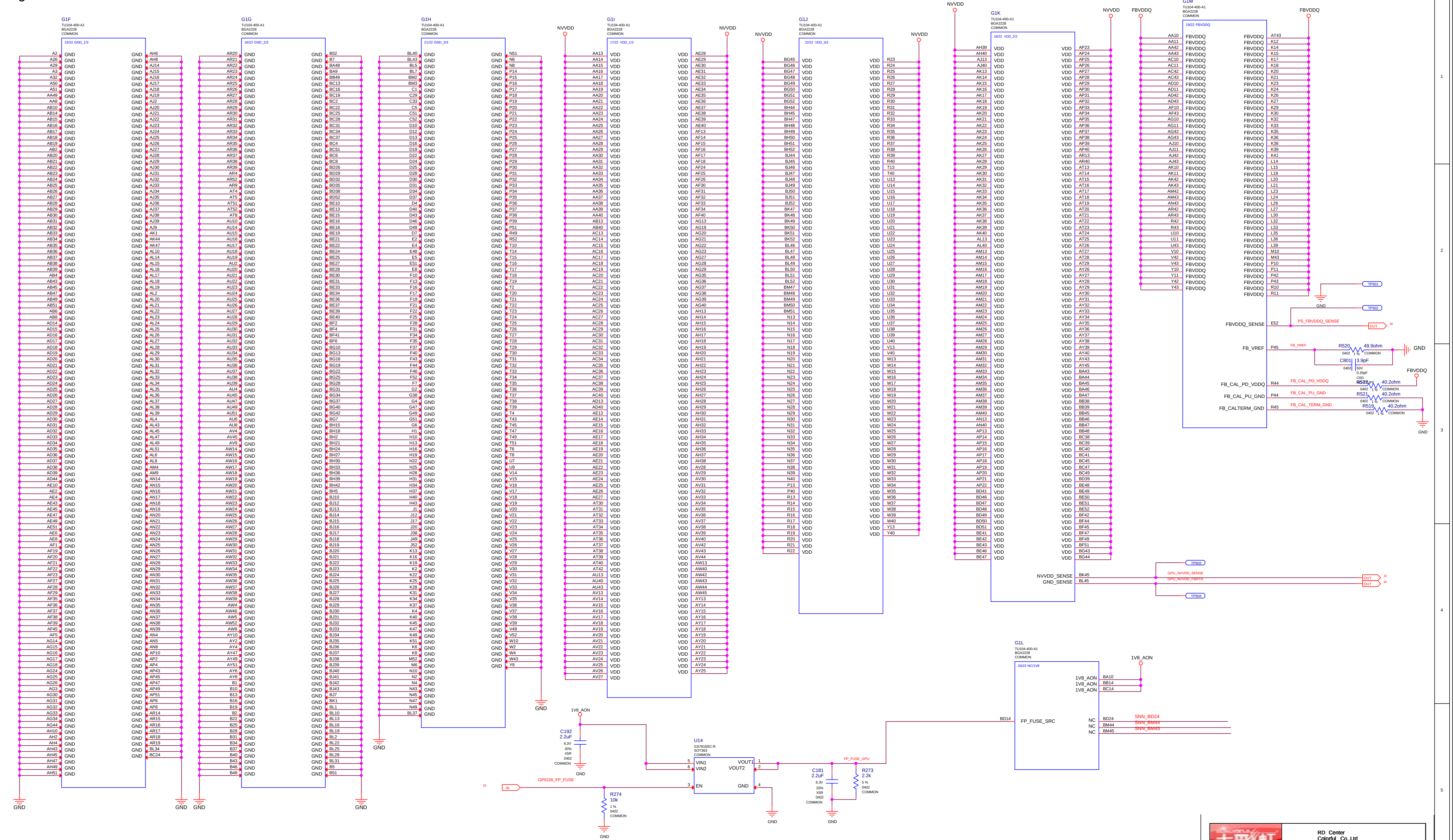
G1F
TU104-400-A1
BGA2228
COMMON
15/22 GND_1/3
G1G
TU104-400-A1
BGA2228
COMMON
16/22 GND_2/3
G1H
TU104-400-A1
BGA2228
COMMON
21/22 GND_3/3
G1I
TU104-400-A1
BGA2228
COMMON
17/22 VDD_1/3
G1J
TU104-400-A1
BGA2228
COMMON
22/22 VDD_2/3
G1K
TU104-400-A1
BGA2228
COMMON
18/22 VDD_3/3
G1M
TU104-400-A1
BGA2228
COMMON
19/22 FBVDDQ
GND
VDD
FBVDDQ
NVVDD
GND
TP501
TP502
FBVDDQ_SENSE
E52
PS_FBVDDQ_SENSE
OUT
30
FB_VREF
P45
FB_VREF
R520
49.9ohm
0402
1 %
COMMON
C801
3.9pF
0402
50V
0.25pF
C0G
FB_CAL_PD_VDDQ
R44
FB_CAL_PD_VDDQ
R522
40.2ohm
0402
1 %
COMMON
FB_CAL_PU_GND
P44
FB_CAL_PU_GND
R521
40.2ohm
0402
1 %
COMMON
FB_CALTERM_GND
R45
FB_CAL_TERM_GND
R519
40.2ohm
0402
1 %
COMMON
TP503
NVVDD_SENSE
BK45
GPU_NVVDD_SENSE
GND_SENSE
BL45
GPU_NVVDD_FBRTN
OUT
32
OUT
32
TP504
G1L
TU104-400-A1
BGA2228
COMMON
20/22 NC/1V8
1V8_AON
1V8_AON
BA10
1V8_AON
BB14
1V8_AON
BC14
BD14
FP_FUSE_SRC
NC
BD24
SNN_BD24
NC
BM44
SNN_BM44
NC
BM45
SNN_BM45
1V8_AON
C192
2.2uF
6.3V
20%
X5R
0402
COMMON
U14
GS7616SC-R
SOT363
COMMON
5
VIN1
6
VIN2
3
EN
VOUT1
1
VOUT2
2
GND
4
FP_FUSE_GPU
C181
2.2uF
6.3V
20%
X5R
0402
COMMON
R273
2.2k
5 %
0402
COMMON
25
IN
GPIO26_FP_FUSE
R274
10k
1 %
0402
COMMON

ASSEMBLY	<ASSEMBLY_DESCRIPTION>
PAGE DETAIL	GPU PWR & GND

ALL NVIDIA DESIGN SPECIFICATIONS, REFERENCE SPECIFICATIONS, REFERENCE BOARDS, FILES, DRAWINGS, DIAGNOSTICS, LISTS AND OTHER DOCUMENTS OR INFORMATION (TOGETHER AND SEPARATELY, 'MATERIALS') ARE BEING PROVIDED 'AS IS'. THE MATERIALS MAY CONTAIN KNOWN AND UNKNOWN VIOLATIONS OR DEVIATIONS OF INDUSTRY STANDARDS AND SPECIFICATIONS. NVIDIA MAKES NO WARRANTIES, EXPRESS, IMPLIED, STATUTORY OR OTHERWISE WITH RESPECT TO THE MATERIALS OR OTHERWISE, AND EXPRESSLY DISCLAIMS ALL IMPLIED WARRANTIES INCLUDING, WITHOUT LIMITATION, THE WARRANTIES OF DESIGN, OF NONINFRINGEMENT, MERCHANTABILITY OR FITNESS FOR A PARTICULAR PURPOSE, OR ARISING FROM A COURSE OF DEALING, TRADE USAGE, TRADE PRACTICE, OR INDUSTRY STANDARDS.

RD Center
Colorful Co.,Ltd
深圳市七彩虹科技 发 展 有限 公 司

Size	Document Number	Rev
Custom	PG161H6-E10	A

Date: Wednesday, October 31, 2018 Sheet 15 of 53

Page16: GPU Decoupling 1

FBVDDQ

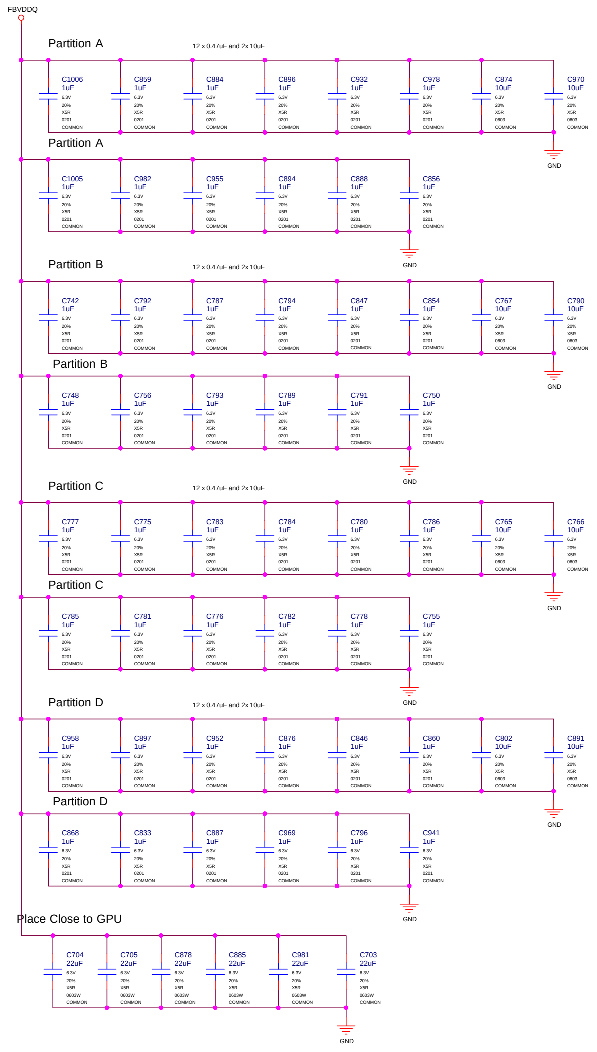
FBVDDQ
Partition A
12 x 0.47uF and 2x 10uF
C1006 1uF 6.3V 20% X5R 0201 COMMON
C859 1uF 6.3V 20% X5R 0201 COMMON
C884 1uF 6.3V 20% X5R 0201 COMMON
C896 1uF 6.3V 20% X5R 0201 COMMON
C932 1uF 6.3V 20% X5R 0201 COMMON
C978 1uF 6.3V 20% X5R 0201 COMMON
C874 10uF 6.3V 20% X5R 0603 COMMON
C970 10uF 6.3V 20% X5R 0603 COMMON
GND
Partition A
C1005 1uF 6.3V 20% X5R 0201 COMMON
C982 1uF 6.3V 20% X5R 0201 COMMON
C955 1uF 6.3V 20% X5R 0201 COMMON
C894 1uF 6.3V 20% X5R 0201 COMMON
C888 1uF 6.3V 20% X5R 0201 COMMON
C856 1uF 6.3V 20% X5R 0201 COMMON
GND
Partition B
12 x 0.47uF and 2x 10uF
C742 1uF 6.3V 20% X5R 0201 COMMON
C792 1uF 6.3V 20% X5R 0201 COMMON
C787 1uF 6.3V 20% X5R 0201 COMMON
C794 1uF 6.3V 20% X5R 0201 COMMON
C847 1uF 6.3V 20% X5R 0201 COMMON
C854 1uF 6.3V 20% X5R 0201 COMMON
C767 10uF 6.3V 20% X5R 0603 COMMON
C790 10uF 6.3V 20% X5R 0603 COMMON
GND
Partition B
C748 1uF 6.3V 20% X5R 0201 COMMON
C756 1uF 6.3V 20% X5R 0201 COMMON
C793 1uF 6.3V 20% X5R 0201 COMMON
C789 1uF 6.3V 20% X5R 0201 COMMON
C791 1uF 6.3V 20% X5R 0201 COMMON
C750 1uF 6.3V 20% X5R 0201 COMMON
GND
Partition C
12 x 0.47uF and 2x 10uF
C777 1uF 6.3V 20% X5R 0201 COMMON
C775 1uF 6.3V 20% X5R 0201 COMMON
C783 1uF 6.3V 20% X5R 0201 COMMON
C784 1uF 6.3V 20% X5R 0201 COMMON
C780 1uF 6.3V 20% X5R 0201 COMMON
C786 1uF 6.3V 20% X5R 0201 COMMON
C765 10uF 6.3V 20% X5R 0603 COMMON
C766 10uF 6.3V 20% X5R 0603 COMMON
GND
Partition C
C785 1uF 6.3V 20% X5R 0201 COMMON
C781 1uF 6.3V 20% X5R 0201 COMMON
C776 1uF 6.3V 20% X5R 0201 COMMON
C782 1uF 6.3V 20% X5R 0201 COMMON
C778 1uF 6.3V 20% X5R 0201 COMMON
C755 1uF 6.3V 20% X5R 0201 COMMON
GND
Partition D
12 x 0.47uF and 2x 10uF
C958 1uF 6.3V 20% X5R 0201 COMMON
C897 1uF 6.3V 20% X5R 0201 COMMON
C952 1uF 6.3V 20% X5R 0201 COMMON
C876 1uF 6.3V 20% X5R 0201 COMMON
C846 1uF 6.3V 20% X5R 0201 COMMON
C860 1uF 6.3V 20% X5R 0201 COMMON
C802 10uF 6.3V 20% X5R 0603 COMMON
C891 10uF 6.3V 20% X5R 0603 COMMON
GND
Partition D
C868 1uF 6.3V 20% X5R 0201 COMMON
C833 1uF 6.3V 20% X5R 0201 COMMON
C887 1uF 6.3V 20% X5R 0201 COMMON
C969 1uF 6.3V 20% X5R 0201 COMMON
C796 1uF 6.3V 20% X5R 0201 COMMON
C941 1uF 6.3V 20% X5R 0201 COMMON
GND
Place Close to GPU
C704 22uF 6.3V 20% X5R 0603W COMMON
C705 22uF 6.3V 20% X5R 0603W COMMON
C878 22uF 6.3V 20% X5R 0603W COMMON
C885 22uF 6.3V 20% X5R 0603W COMMON
C981 22uF 6.3V 20% X5R 0603W COMMON
C703 22uF 6.3V 20% X5R 0603W COMMON
GND

NVVDD

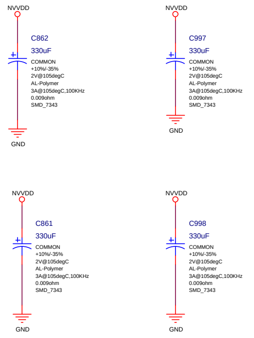
NVVDD
C862 330uF COMMON +10%/-35% 2V@105degC AL-Polymer 3A@105degC,100KHz 0.009ohm SMD_7343
GND
NVVDD
C997 330uF COMMON +10%/-35% 2V@105degC AL-Polymer 3A@105degC,100KHz 0.009ohm SMD_7343
GND
NVVDD
C861 330uF COMMON +10%/-35% 2V@105degC AL-Polymer 3A@105degC,100KHz 0.009ohm SMD_7343
GND
NVVDD
C998 330uF COMMON +10%/-35% 2V@105degC AL-Polymer 3A@105degC,100KHz 0.009ohm SMD_7343
GND

1V8_AON

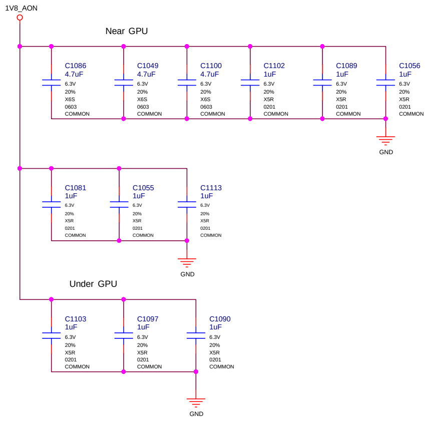
1V8_AON
Near GPU
C1086 4.7uF 6.3V 20% X6S 0603 COMMON
C1049 4.7uF 6.3V 20% X6S 0603 COMMON
C1100 4.7uF 6.3V 20% X6S 0603 COMMON
C1102 1uF 6.3V 20% X5R 0201 COMMON
C1089 1uF 6.3V 20% X5R 0201 COMMON
C1056 1uF 6.3V 20% X5R 0201 COMMON
GND
C1081 1uF 6.3V 20% X5R 0201 COMMON
C1055 1uF 6.3V 20% X5R 0201 COMMON
C1113 1uF 6.3V 20% X5R 0201 COMMON
GND
Under GPU
C1103 1uF 6.3V 20% X5R 0201 COMMON
C1097 1uF 6.3V 20% X5R 0201 COMMON
C1090 1uF 6.3V 20% X5R 0201 COMMON
GND

ASSEMBLY	<ASSEMBLY_DESCRIPTION>
PAGE DETAIL	GPU Decoupling

ALL NVIDIA DESIGN SPECIFICATIONS, REFERENCE SPECIFICATIONS, REFERENCE BOARDS, FILES, DRAWINGS, DIAGNOSTICS, LISTS AND OTHER DOCUMENTS OR INFORMATION (TOGETHER AND SEPARATELY, 'MATERIALS') ARE BEING PROVIDED 'AS IS'. THE MATERIALS MAY CONTAIN KNOWN AND UNKNOWN VIOLATIONS OR DEVIATIONS OF INDUSTRY STANDARDS AND SPECIFICATIONS. NVIDIA MAKES NO WARRANTIES, EXPRESSED, IMPLIED, STATUTORY OR OTHERWISE WITH RESPECT TO THE MATERIALS OR OTHERWISE, AND EXPRESSLY DISCLAIMS ALL IMPLIED WARRANTIES INCLUDING, WITHOUT LIMITATION, THE WARRANTIES OF DESIGN, OF NONINFRINGEMENT, MERCHANTABILITY OR FITNESS FOR A PARTICULAR PURPOSE, OR ARISING FROM A COURSE OF DEALING, TRADE USAGE, TRADE PRACTICE, OR INDUSTRY STANDARDS.

RD Center
Colorful Co.,Ltd
深圳市七彩虹科技 发 展 有限 公 司

Size	Document Number	Rev
Custom	PG161H6-E10	A

Date: Wednesday, October 31, 2018 Sheet 16 of 53

Page17: GPU Decoupling 2

NVVDD

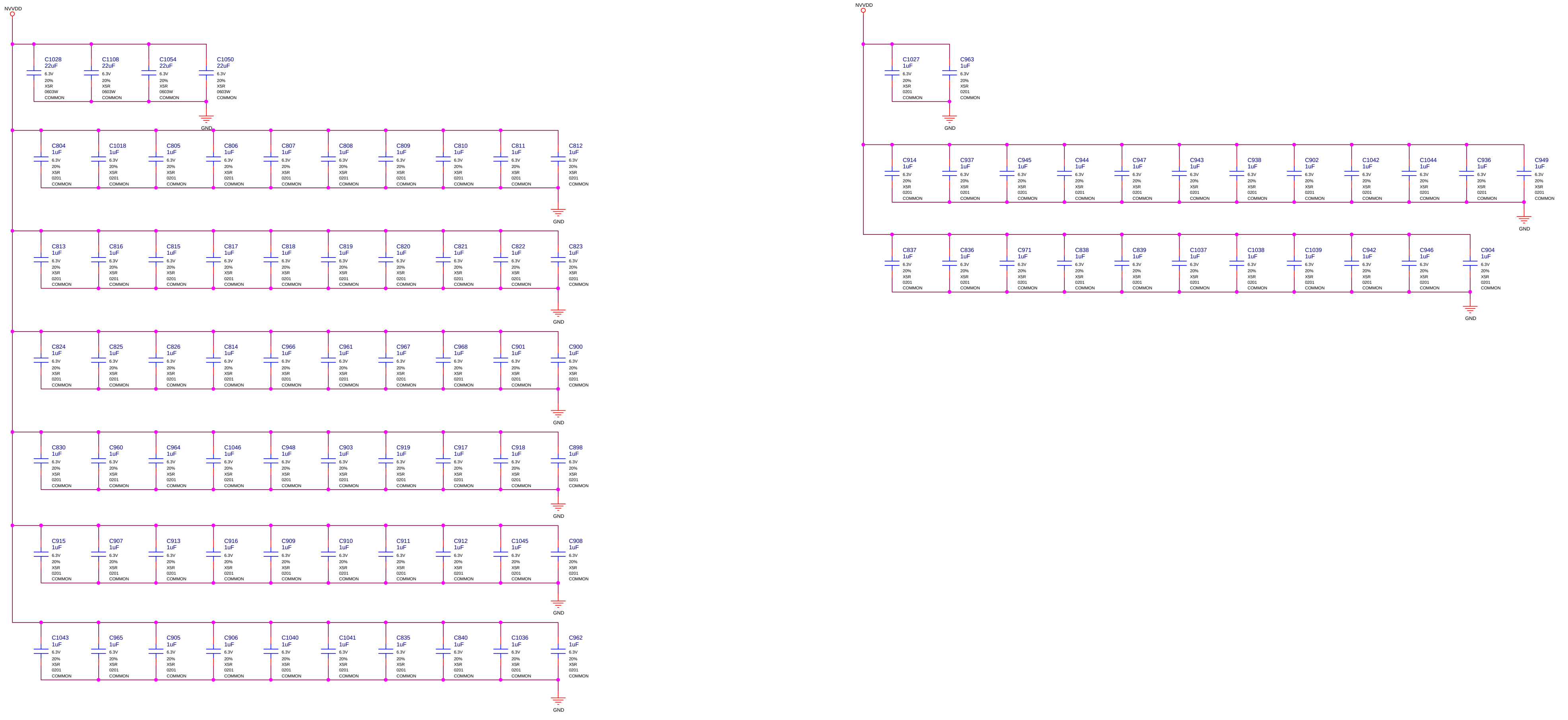
NVVDD
C1028 22uF 6.3V 20% X5R 0603W COMMON
C1108 22uF 6.3V 20% X5R 0603W COMMON
C1054 22uF 6.3V 20% X5R 0603W COMMON
C1050 22uF 6.3V 20% X5R 0603W COMMON
GND
C804 1uF 6.3V 20% X5R 0201 COMMON
C1018 1uF 6.3V 20% X5R 0201 COMMON
C805 1uF 6.3V 20% X5R 0201 COMMON
C806 1uF 6.3V 20% X5R 0201 COMMON
C807 1uF 6.3V 20% X5R 0201 COMMON
C808 1uF 6.3V 20% X5R 0201 COMMON
C809 1uF 6.3V 20% X5R 0201 COMMON
C810 1uF 6.3V 20% X5R 0201 COMMON
C811 1uF 6.3V 20% X5R 0201 COMMON
C812 1uF 6.3V 20% X5R 0201 COMMON
GND
C813 1uF 6.3V 20% X5R 0201 COMMON
C816 1uF 6.3V 20% X5R 0201 COMMON
C815 1uF 6.3V 20% X5R 0201 COMMON
C817 1uF 6.3V 20% X5R 0201 COMMON
C818 1uF 6.3V 20% X5R 0201 COMMON
C819 1uF 6.3V 20% X5R 0201 COMMON
C820 1uF 6.3V 20% X5R 0201 COMMON
C821 1uF 6.3V 20% X5R 0201 COMMON
C822 1uF 6.3V 20% X5R 0201 COMMON
C823 1uF 6.3V 20% X5R 0201 COMMON
GND
C824 1uF 6.3V 20% X5R 0201 COMMON
C825 1uF 6.3V 20% X5R 0201 COMMON
C826 1uF 6.3V 20% X5R 0201 COMMON
C814 1uF 6.3V 20% X5R 0201 COMMON
C966 1uF 6.3V 20% X5R 0201 COMMON
C961 1uF 6.3V 20% X5R 0201 COMMON
C967 1uF 6.3V 20% X5R 0201 COMMON
C968 1uF 6.3V 20% X5R 0201 COMMON
C901 1uF 6.3V 20% X5R 0201 COMMON
C900 1uF 6.3V 20% X5R 0201 COMMON
GND
C830 1uF 6.3V 20% X5R 0201 COMMON
C960 1uF 6.3V 20% X5R 0201 COMMON
C964 1uF 6.3V 20% X5R 0201 COMMON
C1046 1uF 6.3V 20% X5R 0201 COMMON
C948 1uF 6.3V 20% X5R 0201 COMMON
C903 1uF 6.3V 20% X5R 0201 COMMON
C919 1uF 6.3V 20% X5R 0201 COMMON
C917 1uF 6.3V 20% X5R 0201 COMMON
C918 1uF 6.3V 20% X5R 0201 COMMON
C898 1uF 6.3V 20% X5R 0201 COMMON
GND
C915 1uF 6.3V 20% X5R 0201 COMMON
C907 1uF 6.3V 20% X5R 0201 COMMON
C913 1uF 6.3V 20% X5R 0201 COMMON
C916 1uF 6.3V 20% X5R 0201 COMMON
C909 1uF 6.3V 20% X5R 0201 COMMON
C910 1uF 6.3V 20% X5R 0201 COMMON
C911 1uF 6.3V 20% X5R 0201 COMMON
C912 1uF 6.3V 20% X5R 0201 COMMON
C1045 1uF 6.3V 20% X5R 0201 COMMON
C908 1uF 6.3V 20% X5R 0201 COMMON
GND
C1043 1uF 6.3V 20% X5R 0201 COMMON
C965 1uF 6.3V 20% X5R 0201 COMMON
C905 1uF 6.3V 20% X5R 0201 COMMON
C906 1uF 6.3V 20% X5R 0201 COMMON
C1040 1uF 6.3V 20% X5R 0201 COMMON
C1041 1uF 6.3V 20% X5R 0201 COMMON
C835 1uF 6.3V 20% X5R 0201 COMMON
C840 1uF 6.3V 20% X5R 0201 COMMON
C1036 1uF 6.3V 20% X5R 0201 COMMON
C962 1uF 6.3V 20% X5R 0201 COMMON
GND
NVVDD
C1027 1uF 6.3V 20% X5R 0201 COMMON
C963 1uF 6.3V 20% X5R 0201 COMMON
GND
C914 1uF 6.3V 20% X5R 0201 COMMON
C937 1uF 6.3V 20% X5R 0201 COMMON
C945 1uF 6.3V 20% X5R 0201 COMMON
C944 1uF 6.3V 20% X5R 0201 COMMON
C947 1uF 6.3V 20% X5R 0201 COMMON
C943 1uF 6.3V 20% X5R 0201 COMMON
C938 1uF 6.3V 20% X5R 0201 COMMON
C902 1uF 6.3V 20% X5R 0201 COMMON
C1042 1uF 6.3V 20% X5R 0201 COMMON
C1044 1uF 6.3V 20% X5R 0201 COMMON
C936 1uF 6.3V 20% X5R 0201 COMMON
C949 1uF 6.3V 20% X5R 0201 COMMON
GND
C837 1uF 6.3V 20% X5R 0201 COMMON
C836 1uF 6.3V 20% X5R 0201 COMMON
C971 1uF 6.3V 20% X5R 0201 COMMON
C838 1uF 6.3V 20% X5R 0201 COMMON
C839 1uF 6.3V 20% X5R 0201 COMMON
C1037 1uF 6.3V 20% X5R 0201 COMMON
C1038 1uF 6.3V 20% X5R 0201 COMMON
C1039 1uF 6.3V 20% X5R 0201 COMMON
C942 1uF 6.3V 20% X5R 0201 COMMON
C946 1uF 6.3V 20% X5R 0201 COMMON
C904 1uF 6.3V 20% X5R 0201 COMMON
GND

ASSEMBLY	<ASSEMBLY_DESCRIPTION>
PAGE DETAIL	GPU Decoupling2

ALL NVIDIA DESIGN SPECIFICATIONS, REFERENCE SPECIFICATIONS, REFERENCE BOARDS, FILES, DRAWINGS, DIAGNOSTICS, LISTS AND OTHER DOCUMENTS OR INFORMATION (TOGETHER AND SEPARATELY, 'MATERIALS') ARE BEING PROVIDED 'AS IS'. THE MATERIALS MAY CONTAIN KNOWN AND UNKNOWN VIOLATIONS OR DEVIATIONS OF INDUSTRY STANDARDS AND SPECIFICATIONS. NVIDIA MAKES NO WARRANTIES, EXPRESSED, IMPLIED, STATUTORY OR OTHERWISE WITH RESPECT TO THE MATERIALS OR OTHERWISE, AND EXPRESSLY DISCLAIMS ALL IMPLIED WARRANTIES INCLUDING, WITHOUT LIMITATION, THE WARRANTIES OF DESIGN, OF NONINFRINGEMENT, MERCHANTABILITY OR FITNESS FOR A PARTICULAR PURPOSE, OR ARISING FROM A COURSE OF DEALING, TRADE USAGE, TRADE PRACTICE, OR INDUSTRY STANDARDS.

RD Center
Colorful Co.,Ltd
深圳市七彩虹科技发展有限公司

Size Custom	Document Number PG161H6-E10	Rev A
Date: Wednesday, October 31, 2018	Sheet 17 of 53	

Page18: IFPAB DVI-D-DL

IFPAB DVI-D-DL CO-LAYOUT WITH 2x DP

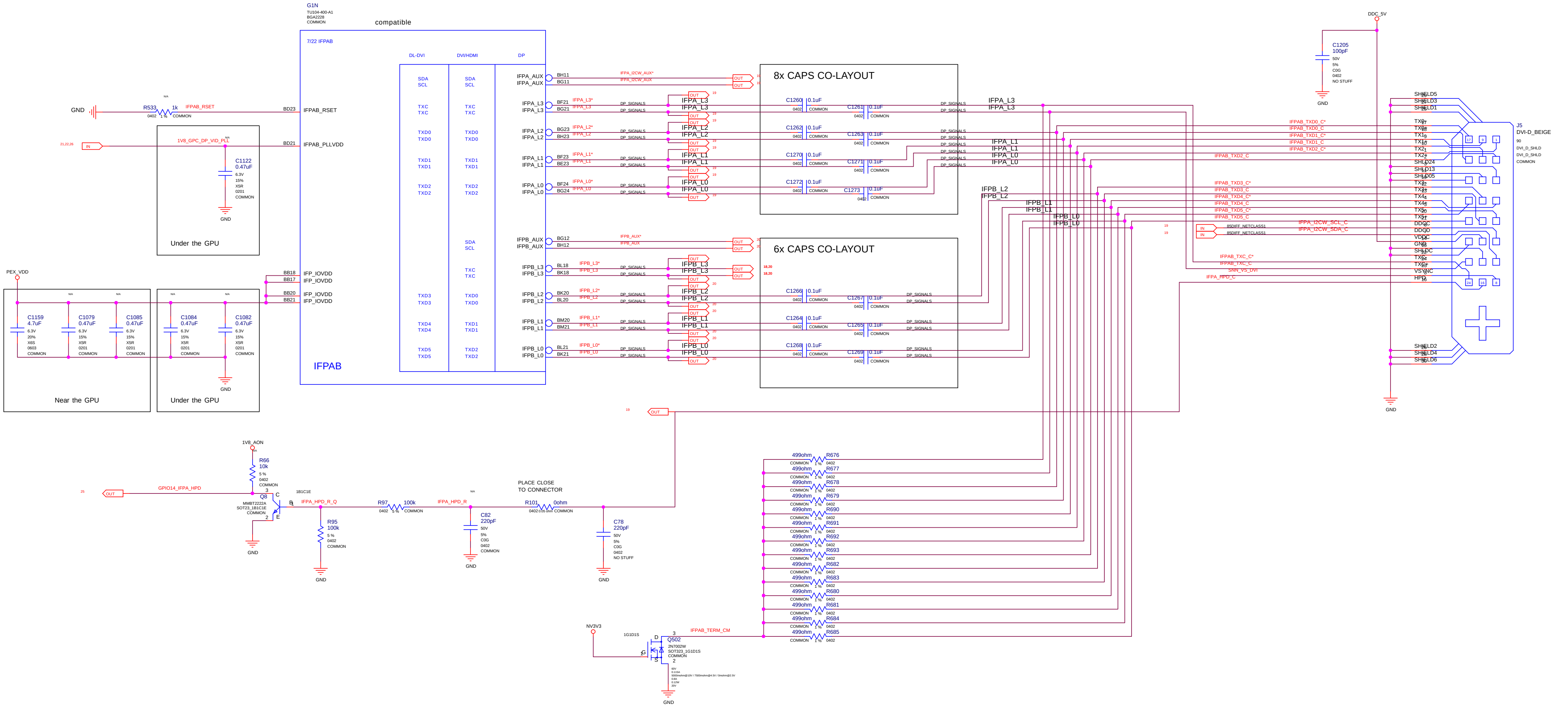
G1N
TU104-400-A1
BGA2228
COMMON
compatible
7/22 IFPAB
DL-DVI
DVI/HDMI
DP
GND
R533 1k
0402 1 % COMMON
N/A
IFPAB_RSET
BD23 IFPAB_RSET
21,22,26
IN
1V8_GPC_DP_VID_PLL
BD21 IFPAB_PLLVDD
C1122 0.47uF 6.3V 15% X5R 0201 COMMON
Under the GPU
PEX_VDD
C1159 4.7uF 6.3V 20% X6S 0603 COMMON
C1079 0.47uF 6.3V 15% X5R 0201 COMMON
C1085 0.47uF 6.3V 15% X5R 0201 COMMON
Near the GPU
C1084 0.47uF 6.3V 15% X5R 0201 COMMON
C1082 0.47uF 6.3V 15% X5R 0201 COMMON
Under the GPU
BB18 IFP_IOVDD
BB17 IFP_IOVDD
BB20 IFP_IOVDD
BB21 IFP_IOVDD
IFPAB
SDA SCL
TXC TXC
TXD0 TXD0
TXD1 TXD1
TXD2 TXD2
TXD3 TXD3
TXD4 TXD4
TXD5 TXD5
IFPA_AUX BH11 IFPA_I2CW_AUX*
IFPA_AUX BG11 IFPA_I2CW_AUX
IFPA_L3 BF21 IFPA_L3*
IFPA_L3 BG21 IFPA_L3
IFPA_L2 BG23 IFPA_L2*
IFPA_L2 BH23 IFPA_L2
IFPA_L1 BF23 IFPA_L1*
IFPA_L1 BE23 IFPA_L1
IFPA_L0 BF24 IFPA_L0*
IFPA_L0 BG24 IFPA_L0
IFPB_AUX BG12 IFPB_AUX*
IFPB_AUX BH12 IFPB_AUX
IFPB_L3 BL18 IFPB_L3*
IFPB_L3 BK18 IFPB_L3
IFPB_L2 BK20 IFPB_L2*
IFPB_L2 BL20 IFPB_L2
IFPB_L1 BM20 IFPB_L1*
IFPB_L1 BM21 IFPB_L1
IFPB_L0 BL21 IFPB_L0*
IFPB_L0 BK21 IFPB_L0
DP_SIGNALS
OUT
19
20
18,20
8x CAPS CO-LAYOUT
C1260 0.1uF 0402 COMMON
C1261 0.1uF 0402 COMMON
C1262 0.1uF 0402 COMMON
C1263 0.1uF 0402 COMMON
C1270 0.1uF 0402 COMMON
C1271 0.1uF 0402 COMMON
C1272 0.1uF 0402 COMMON
C1273 0.1uF 0402 COMMON
6x CAPS CO-LAYOUT
C1266 0.1uF 0402 COMMON
C1267 0.1uF 0402 COMMON
C1264 0.1uF 0402 COMMON
C1265 0.1uF 0402 COMMON
C1268 0.1uF 0402 COMMON
C1269 0.1uF 0402 COMMON
DDC_5V
C1205 100pF 50V 5% C0G 0402 NO STUFF
GND
IFPAB_TXD0_C*
IFPAB_TXD0_C
IFPAB_TXD1_C*
IFPAB_TXD1_C
IFPAB_TXD2_C*
IFPAB_TXD2_C
IFPAB_TXD3_C*
IFPAB_TXD3_C
IFPAB_TXD4_C*
IFPAB_TXD4_C
IFPAB_TXD5_C*
IFPAB_TXD5_C
IN 85DIFF_NETCLASS1
IFPA_I2CW_SCL_C
IFPA_I2CW_SDA_C
IFPAB_TXC_C*
IFPAB_TXC_C
SNN_VS_DVI
IFPA_HPD_C
J5
DVI-D_BEIGE
90
DVI_D_SHLD
DVI_D_SHLD
COMMON
SHIELD5 29
SHIELD3 27
SHIELD1 25
TX0- 17
TX0+ 18
TX1- 9
TX1+ 10
TX2- 1
TX2+ 2
SHLD24 3
SHLD13 11
SHLD05 19
TX3- 12
TX3+ 13
TX4- 4
TX4+ 5
TX5- 20
TX5+ 21
DDCC 6
DDCD 7
VDDC 14
GND 15
SHLDC 22
TXC- 24
TXC+ 23
VSYNC 8
HPD 16
SHIELD2 26
SHIELD4 28
SHIELD6 30
1V8_AON
R66 10k 5 % 0402 COMMON
25
OUT
GPIO14_IFPA_HPD
Q8 MMBT2222A SOT23_1B1C1E COMMON
1B1C1E
C B E
IFPA_HPD_R_Q
R95 100k 5 % 0402 COMMON
R97 100k 0402 5 % COMMON
IFPA_HPD_R
C82 220pF 50V 5% C0G 0402 COMMON
PLACE CLOSE
TO CONNECTOR
R101 0ohm 0402 0.05 ohm COMMON
C78 220pF 50V 5% C0G 0402 NO STUFF
499ohm R676 COMMON 1 % 0402
499ohm R677 COMMON 1 % 0402
499ohm R678 COMMON 1 % 0402
499ohm R679 COMMON 1 % 0402
499ohm R690 COMMON 1 % 0402
499ohm R691 COMMON 1 % 0402
499ohm R692 COMMON 1 % 0402
499ohm R693 COMMON 1 % 0402
499ohm R682 COMMON 1 % 0402
499ohm R683 COMMON 1 % 0402
499ohm R680 COMMON 1 % 0402
499ohm R681 COMMON 1 % 0402
499ohm R684 COMMON 1 % 0402
499ohm R685 COMMON 1 % 0402
NV3V3
1G1D1S
Q502 2N7002W SOT323_1G1D1S COMMON
D G S
IFPAB_TERM_CM
60V 0.115A 5000mohm@10V / 7500mohm@4.5V / 0mohm@2.5V 0.8A 0.12W 20V

ASSEMBLY	<ASSEMBLY_DESCRIPTION>
PAGE DETAIL	IO: IFPAB DVI-D-DL

ALL NVIDIA DESIGN SPECIFICATIONS, REFERENCE SPECIFICATIONS, REFERENCE BOARDS, FILES, DRAWINGS, DIAGNOSTICS, LISTS AND OTHER DOCUMENTS OR INFORMATION (TOGETHER AND SEPARATELY, 'MATERIALS') ARE BEING PROVIDED 'AS IS'. THE MATERIALS MAY CONTAIN KNOWN AND UNKNOWN VIOLATIONS OR DEVIATIONS OF INDUSTRY STANDARDS AND SPECIFICATIONS. NVIDIA MAKES NO WARRANTIES, EXPRESSED, IMPLIED, STATUTORY OR OTHERWISE WITH RESPECT TO THE MATERIALS OR OTHERWISE, AND EXPRESSLY DISCLAIMS ALL IMPLIED WARRANTIES INCLUDING, WITHOUT LIMITATION, THE WARRANTIES OF DESIGN, OF NONINFRINGEMENT, MERCHANTABILITY OR FITNESS FOR A PARTICULAR PURPOSE, OR ARISING FROM A COURSE OF DEALING, TRADE USAGE, TRADE PRACTICE, OR INDUSTRY STANDARDS.

RD Center
Colorful Co.,Ltd
深圳市七彩虹科技发展有限公司

Size	Document Number	Rev
Custom	PG161H6-E10	A

Date: Wednesday, October 31, 2018 Sheet 18 of 53

Page19: IFPA DP

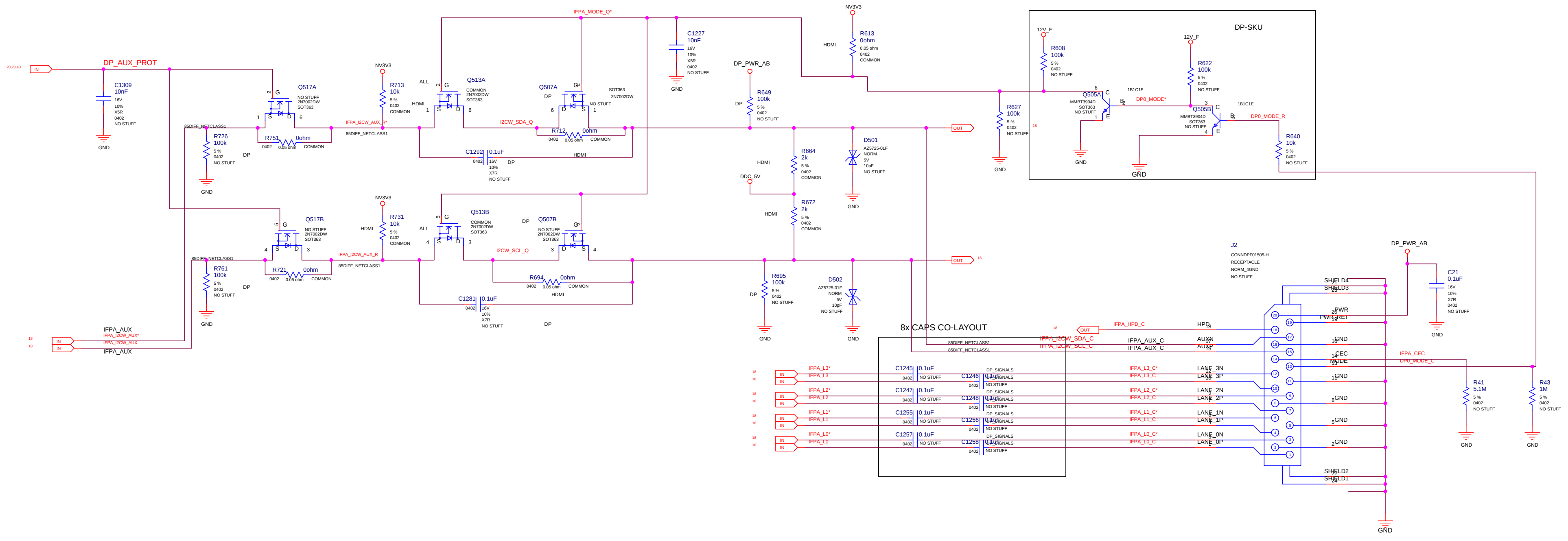
DP_AUX_PROT
20,23,43
IN
C1309
10nF
16V
10%
X5R
0402
NO STUFF
GND
Q517A
NO STUFF
2N7002DW
SOT363
R726
100k
5 %
0402
NO STUFF
DP
85DIFF_NETCLASS1
R751
0ohm
0402
0.05 ohm
COMMON
NV3V3
R713
10k
5 %
0402
COMMON
HDMI
ALL
IFPA_I2CW_AUX_R*
Q513A
COMMON
2N7002DW
SOT363
IFPA_MODE_Q*
Q507A
DP
SOT363
2N7002DW
NO STUFF
I2CW_SDA_Q
R712
0ohm
C1292
0.1uF
16V
10%
X7R
NO STUFF
C1227
10nF
DP_PWR_AB
R649
100k
R613
0ohm
0.05 ohm
D501
AZ5725-01F
NORM
5V
10pF
NO STUFF
R664
2k
DDC_5V
R672
2k
OUT
18
Q517B
R761
100k
R721
0ohm
R731
10k
IFPA_I2CW_AUX_R
Q513B
Q507B
I2CW_SCL_Q
R694
0ohm
C1281
0.1uF
R695
100k
D502
AZ5725-01F
IFPA_AUX
IFPA_I2CW_AUX*
IFPA_I2CW_AUX
DP-SKU
12V_F
R608
100k
R622
100k
R627
100k
Q505A
MMBT3904D
1B1C1E
DP0_MODE*
Q505B
DP0_MODE_R
R640
10k
8x CAPS CO-LAYOUT
IFPA_HPD_C
IFPA_I2CW_SDA_C
IFPA_I2CW_SCL_C
IFPA_AUX_C
IFPA_L3*
IFPA_L3
C1245
C1246
IFPA_L2*
IFPA_L2
C1247
C1248
IFPA_L1*
IFPA_L1
C1255
C1256
IFPA_L0*
IFPA_L0
C1257
C1258
DP_SIGNALS
IFPA_L3_C*
IFPA_L3_C
IFPA_L2_C*
IFPA_L2_C
IFPA_L1_C*
IFPA_L1_C
IFPA_L0_C*
IFPA_L0_C
J2
CONNDPF01505-H
RECEPTACLE
NORM_4GND
NO STUFF
HPD
AUXN
AUXP
LANE_3N
LANE_3P
LANE_2N
LANE_2P
LANE_1N
LANE_1P
LANE_0N
LANE_0P
SHIELD1
SHIELD2
SHIELD3
SHIELD4
PWR
PWR_RET
CEC
MODE
IFPA_CEC
DP0_MODE_C
C21
0.1uF
R41
5.1M
R43
1M

IFPA DP CO-LAYOUT WITH IFPAB DVI-D-DL

ASSEMBLY	<ASSEMBLY_DESCRIPTION>
PAGE DETAIL	IO: IFPA DP

ALL NVIDIA DESIGN SPECIFICATIONS, REFERENCE SPECIFICATIONS, REFERENCE BOARDS, FILES, DRAWINGS, DIAGNOSTICS, LISTS AND OTHER DOCUMENTS OR INFORMATION (TOGETHER AND SEPARATELY, 'MATERIALS') ARE BEING PROVIDED 'AS IS'. THE MATERIALS MAY CONTAIN KNOWN AND UNKNOWN VIOLATIONS OR DEVIATIONS OF INDUSTRY STANDARDS AND SPECIFICATIONS. NVIDIA MAKES NO WARRANTIES, EXPRESSED, IMPLIED, STATUTORY OR OTHERWISE WITH RESPECT TO THE MATERIALS OR OTHERWISE, AND EXPRESSLY DISCLAIMS ALL IMPLIED WARRANTIES INCLUDING, WITHOUT LIMITATION, THE WARRANTIES OF DESIGN, OF NONINFRINGEMENT, MERCHANTABILITY OR FITNESS FOR A PARTICULAR PURPOSE, OR ARISING FROM A COURSE OF DEALING, TRADE USAGE, TRADE PRACTICE, OR INDUSTRY STANDARDS.

RD Center
Colorful Co.,Ltd
深圳市七彩虹科技发展有限公司

Size	Document Number	Rev
Custom	PG161H6-E10	A

Date: Wednesday, October 31, 2018 Sheet 19 of 53

IFPB DP CO-LAYOUT WITH IFPAB DVI-D-DL

Two cases to be considered:

1. DP AUX to DP connector: AUX AC coupled
2. DP AUX to DP-DVI dongle: AUX pass through

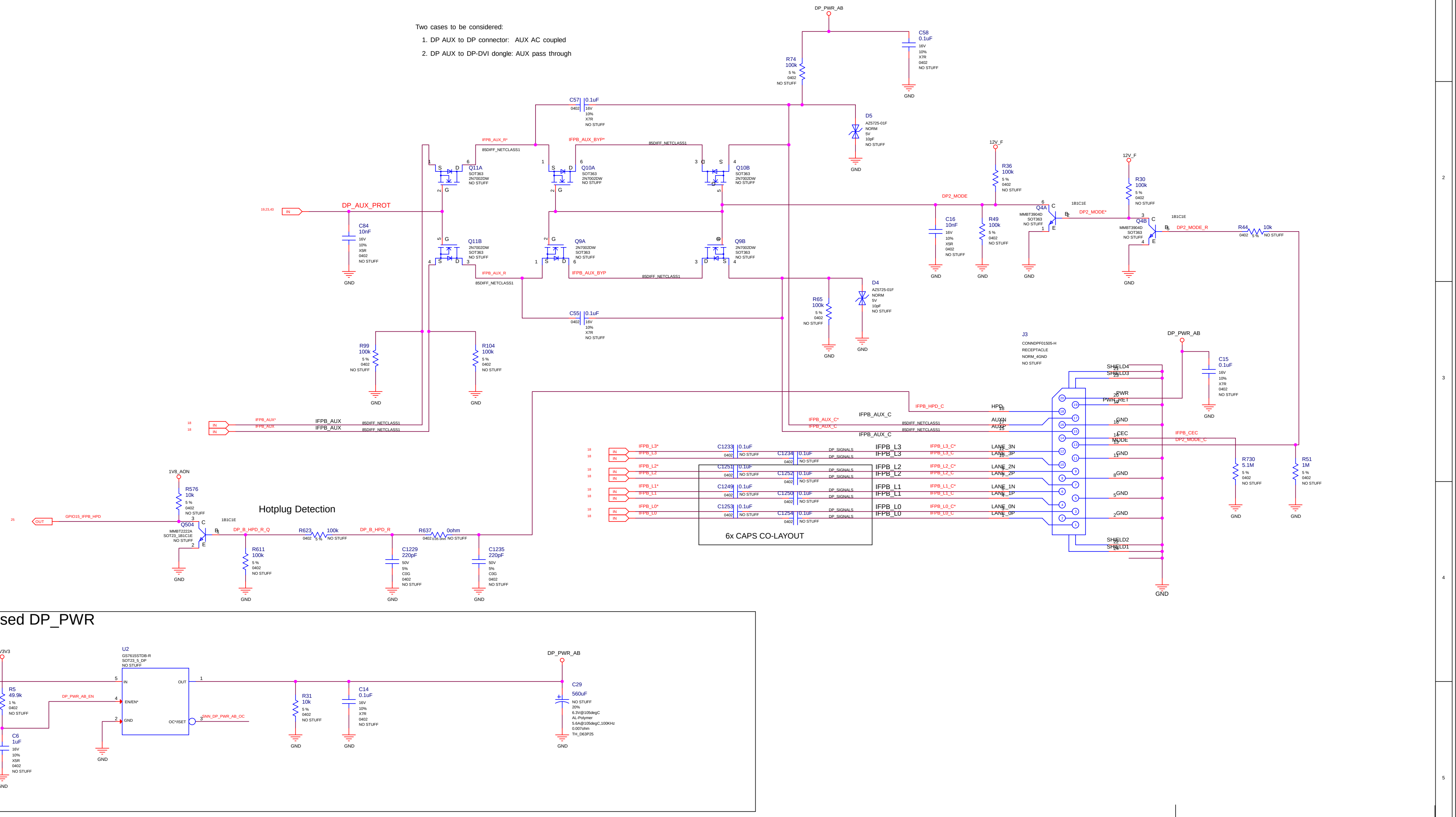
DP_PWR_AB
C58 0.1uF 16V 10% X7R 0402 NO STUFF
R74 100k 5% 0402 NO STUFF
C57 0.1uF 16V 10% X7R 0402 NO STUFF
D5 AZ5725-01F NORM 5V 10pF NO STUFF
GND
IFPB_AUX_R*
IFPB_AUX_BYP*
85DIFF_NETCLASS1
Q11A SOT363 2N7002DW NO STUFF
Q10A SOT363 2N7002DW NO STUFF
Q10B SOT363 2N7002DW NO STUFF
Q11B 2N7002DW SOT363 NO STUFF
Q9A 2N7002DW SOT363 NO STUFF
Q9B 2N7002DW SOT363 NO STUFF
DP_AUX_PROT
IN
C84 10nF 16V 10% X5R 0402 NO STUFF
IFPB_AUX_R
IFPB_AUX_BYP
C55 0.1uF 16V 10% X7R NO STUFF
R65 100k 5% 0402 NO STUFF
D4 AZ5725-01F NORM 5V 10pF NO STUFF
12V_F
R36 100k 5% 0402 NO STUFF
R30 100k 5% 0402 NO STUFF
DP2_MODE
DP2_MODE*
DP2_MODE_R
Q4A MMBT3904D SOT363 NO STUFF
Q4B MMBT3904D SOT363 NO STUFF
1B1C1E
C16 10nF 16V 10% X5R 0402 NO STUFF
R49 100k 5% 0402 NO STUFF
R44 10k 0402 5% NO STUFF
R99 100k 5% 0402 NO STUFF
R104 100k 5% 0402 NO STUFF
IFPB_AUX* IFPB_AUX
J3 CONNDPF01505-H RECEPTACLE NORM_4GND NO STUFF
C15 0.1uF 16V 10% X7R 0402 NO STUFF
IFPB_AUX_C
IFPB_HPD_C
IFPB_AUX_C* IFPB_AUX_C
IFPB_CEC
DP2_MODE_C
SHIELD4 SHIELD3 PWR PWR_RET HPD AUXN AUXP GND CEC MODE LANE_3N LANE_3P LANE_2N LANE_2P LANE_1N LANE_1P LANE_0N LANE_0P SHIELD2 SHIELD1
IFPB_L3* IFPB_L3 IFPB_L2* IFPB_L2 IFPB_L1* IFPB_L1 IFPB_L0* IFPB_L0
C1233 0.1uF 0402 NO STUFF
C1234 0.1uF 0402 NO STUFF
C1251 0.1uF C1252 0.1uF
C1249 0.1uF C1250 0.1uF
C1253 0.1uF C1254 0.1uF
DP_SIGNALS
IFPB_L3_C* IFPB_L3_C IFPB_L2_C* IFPB_L2_C IFPB_L1_C* IFPB_L1_C IFPB_L0_C* IFPB_L0_C
6x CAPS CO-LAYOUT
R730 5.1M 5% 0402 NO STUFF
R51 1M 5% 0402 NO STUFF
1V8_AON
R576 10k 5% 0402 NO STUFF
Hotplug Detection
GPIO15_IFPB_HPD
OUT
Q504 MMBT2222A SOT23_1B1C1E NO STUFF
DP_B_HPD_R_Q
R623 100k 0402 5% NO STUFF
DP_B_HPD_R
R637 0ohm 0402 NO STUFF
R611 100k 5% 0402 NO STUFF
C1229 220pF 50V 5% C0G 0402 NO STUFF
C1235 220pF 50V 5% C0G 0402 NO STUFF
Fused DP_PWR
3V3
NV3V3
C5 0.1uF 16V 10% X7R 0402 NO STUFF
R5 49.9k 1% 0402 NO STUFF
C6 1uF 16V 10% X5R 0402 NO STUFF
DP_PWR_AB_EN
U2 GS7615STDB-R SOT23_5_DP NO STUFF
IN EN/EN* GND OUT OC*/ISET
SNN_DP_PWR_AB_OC
R31 10k 5% 0402 NO STUFF
C14 0.1uF 16V 10% X7R 0402 NO STUFF
C29 560uF NO STUFF 20% 6.3V@105degC AL-Polymer 5.6A@105degC,100KHz 0.007ohm TH_D63P25

ASSEMBLY	<ASSEMBLY_DESCRIPTION>
PAGE DETAIL	IO: IFPB DP

RD Center
Colorful Co.,Ltd
深圳市七彩虹科技发展有限公司

Size	Document Number	Rev
Custom	PG161H6-E10	A

Date: Wednesday, October 31, 2018 Sheet 20 of 53

ALL NVIDIA DESIGN SPECIFICATIONS, REFERENCE SPECIFICATIONS, REFERENCE BOARDS, FILES, DRAWINGS, DIAGNOSTICS, LISTS AND OTHER DOCUMENTS OR INFORMATION (TOGETHER AND SEPARATELY, 'MATERIALS') ARE BEING PROVIDED 'AS IS'. THE MATERIALS MAY CONTAIN KNOWN AND UNKNOWN VIOLATIONS OR DEVIATIONS OF INDUSTRY STANDARDS AND SPECIFICATIONS. NVIDIA MAKES NO WARRANTIES, EXPRESSED, IMPLIED, STATUTORY OR OTHERWISE WITH RESPECT TO THE MATERIALS OR OTHERWISE, AND EXPRESSLY DISCLAIMS ALL IMPLIED WARRANTIES INCLUDING, WITHOUT LIMITATION, THE WARRANTIES OF DESIGN, OF NONINFRINGEMENT, MERCHANTABILITY OR FITNESS FOR A PARTICULAR PURPOSE, OR ARISING FROM A COURSE OF DEALING, TRADE USAGE, TRADE PRACTICE, OR INDUSTRY STANDARDS.

Page20: IFPE & IFPF USB-C NC

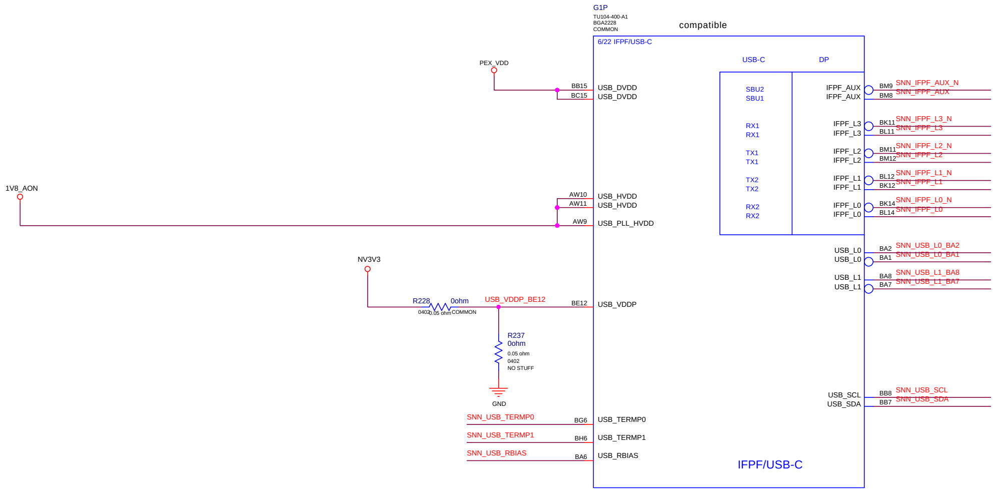
G1P
TU104-400-A1
BGA2228
COMMON
compatible
6/22 IFPF/USB-C
USB-C
DP
PEX_VDD
BB15
BC15
USB_DVDD
USB_DVDD
1V8_AON
AW10
AW11
AW9
USB_HVDD
USB_HVDD
USB_PLL_HVDD
NV3V3
R228
0ohm
0402
0.05 ohm
COMMON
USB_VDDP_BE12
BE12
USB_VDDP
R237
0ohm
0.05 ohm
0402
NO STUFF
GND
SNN_USB_TERMP0
BG6
USB_TERMP0
SNN_USB_TERMP1
BH6
USB_TERMP1
SNN_USB_RBIAS
BA6
USB_RBIAS
SBU2
SBU1
RX1
RX1
TX1
TX1
TX2
TX2
RX2
RX2
IFPF_AUX
IFPF_AUX
BM9
BM8
SNN_IFPF_AUX_N
SNN_IFPF_AUX
IFPF_L3
IFPF_L3
BK11
BL11
SNN_IFPF_L3_N
SNN_IFPF_L3
IFPF_L2
IFPF_L2
BM11
BM12
SNN_IFPF_L2_N
SNN_IFPF_L2
IFPF_L1
IFPF_L1
BL12
BK12
SNN_IFPF_L1_N
SNN_IFPF_L1
IFPF_L0
IFPF_L0
BK14
BL14
SNN_IFPF_L0_N
SNN_IFPF_L0
USB_L0
USB_L0
BA2
BA1
SNN_USB_L0_BA2
SNN_USB_L0_BA1
USB_L1
USB_L1
BA8
BA7
SNN_USB_L1_BA8
SNN_USB_L1_BA7
USB_SCL
USB_SDA
BB8
BB7
SNN_USB_SCL
SNN_USB_SDA
IFPF/USB-C

IFPF NC

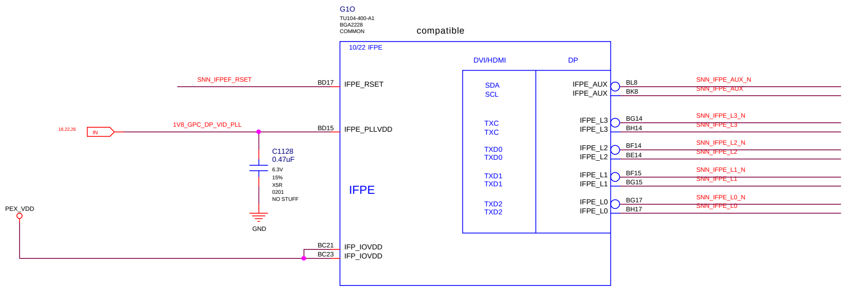
G1O
TU104-400-A1
BGA2228
COMMON
compatible
10/22 IFPE
DVI/HDMI
DP
SNN_IFPEF_RSET
BD17
IFPE_RSET
18,22,26
IN
1V8_GPC_DP_VID_PLL
BD15
IFPE_PLLVDD
C1128
0.47uF
6.3V
15%
X5R
0201
NO STUFF
GND
IFPE
PEX_VDD
BC21
BC23
IFP_IOVDD
IFP_IOVDD
SDA
SCL
TXC
TXC
TXD0
TXD0
TXD1
TXD1
TXD2
TXD2
IFPE_AUX
IFPE_AUX
BL8
BK8
SNN_IFPE_AUX_N
SNN_IFPE_AUX
IFPE_L3
IFPE_L3
BG14
BH14
SNN_IFPE_L3_N
SNN_IFPE_L3
IFPE_L2
IFPE_L2
BF14
BE14
SNN_IFPE_L2_N
SNN_IFPE_L2
IFPE_L1
IFPE_L1
BF15
BG15
SNN_IFPE_L1_N
SNN_IFPE_L1
IFPE_L0
IFPE_L0
BG17
BH17
SNN_IFPE_L0_N
SNN_IFPE_L0

IFPE NC

ASSEMBLY
PAGE DETAIL
<ASSEMBLY_DESCRIPTION>

ALL NVIDIA DESIGN SPECIFICATIONS, REFERENCE SPECIFICATIONS, REFERENCE BOARDS, FILES, DRAWINGS, DIAGNOSTICS, LISTS AND OTHER DOCUMENTS OR INFORMATION (TOGETHER AND SEPARATELY, 'MATERIALS') ARE BEING PROVIDED 'AS IS'. THE MATERIALS MAY CONTAIN KNOWN AND UNKNOWN VIOLATIONS OR DEVIATIONS OF INDUSTRY STANDARDS AND SPECIFICATIONS. NVIDIA MAKES NO WARRANTIES, EXPRESSED, IMPLIED, STATUTORY OR OTHERWISE WITH RESPECT TO THE MATERIALS OR OTHERWISE, AND EXPRESSLY DISCLAIMS ALL IMPLIED WARRANTIES INCLUDING, WITHOUT LIMITATION, THE WARRANTIES OF DESIGN, OF NONINFRINGEMENT, MERCHANTABILITY OR FITNESS FOR A PARTICULAR PURPOSE, OR ARISING FROM A COURSE OF DEALING, TRADE USAGE, TRADE PRACTICE, OR INDUSTRY STANDARDS.

IO: IFPE & IFPF USBC NC

RD Center
Colorful Co.,Ltd
深圳市七彩虹科技发展有限公司

Size	Document Number	Rev
Custom	PG161H6-E10	A

Date: Friday, November 09, 2018 Sheet 21 of 53

Page22: IFPC HDMI

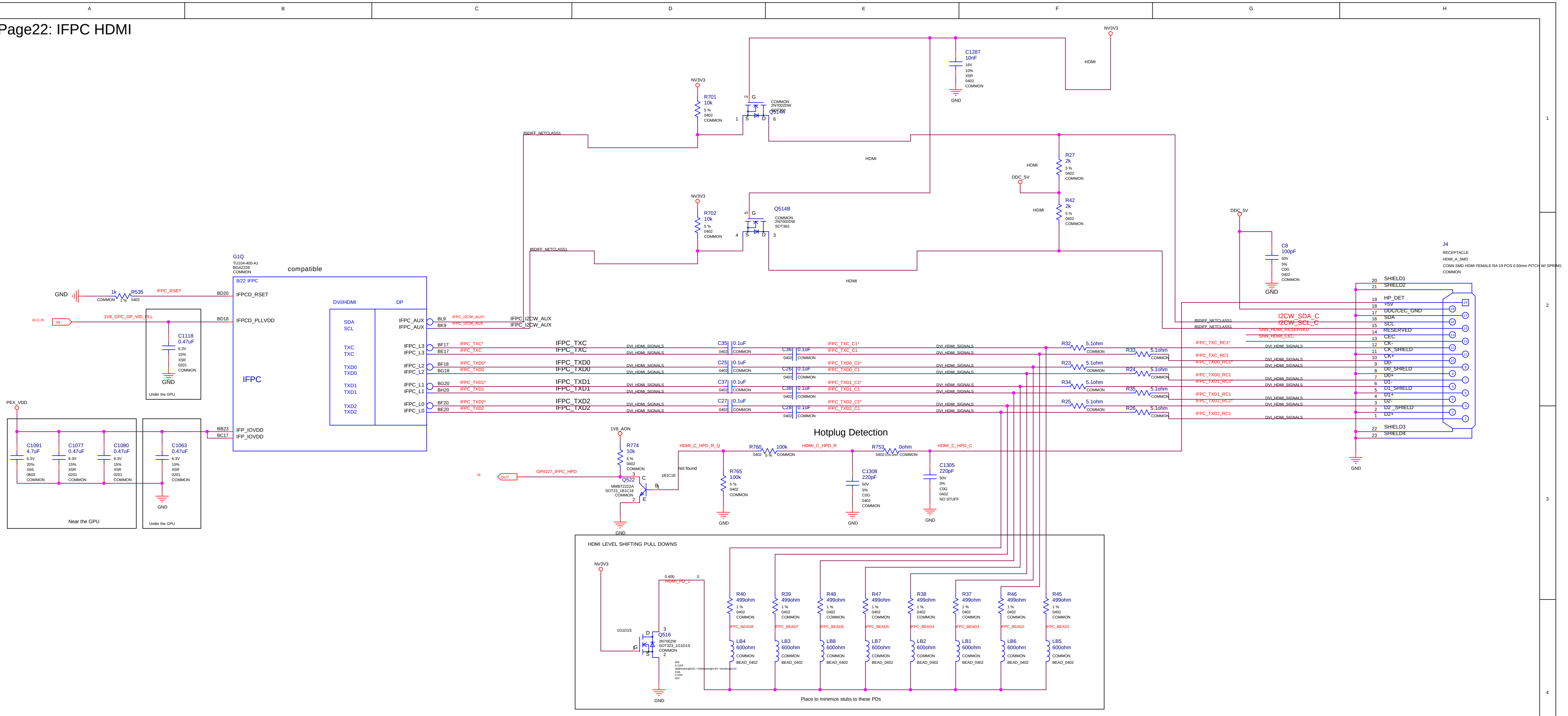
G1Q
TU104-400-A1
BGA2228
COMMON
compatible
8/22 IFPC
IFPC
DVI/HDMI
DP
SDA
SCL
TXC
TXC
TXD0
TXD0
TXD1
TXD1
TXD2
TXD2
IFPCD_RSET
IFPCD_PLLVDD
IFP_IOVDD
IFP_IOVDD
BD20
BD18
BB23
BC17
IFPC_AUX
IFPC_AUX
IFPC_L3
IFPC_L3
IFPC_L2
IFPC_L2
IFPC_L1
IFPC_L1
IFPC_L0
IFPC_L0
BL9
BK9
BF17
BE17
BF18
BG18
BG20
BH20
BF20
BE20
IFPC_I2CW_AUX*
IFPC_I2CW_AUX
IFPC_TXC*
IFPC_TXC
IFPC_TXD0*
IFPC_TXD0
IFPC_TXD1*
IFPC_TXD1
IFPC_TXD2*
IFPC_TXD2
GND
1k R535 COMMON 1 % 0402
IFPC_RSET
18,21,26 IN
1V8_GPC_DP_VID_PLL
C1118 0.47uF 6.3V 15% X5R 0201 COMMON
Under the GPU
PEX_VDD
C1091 4.7uF 6.3V 20% X6S 0603 COMMON
C1077 0.47uF 6.3V 15% X5R 0201 COMMON
C1080 0.47uF 6.3V 15% X5R 0201 COMMON
C1063 0.47uF 6.3V 15% X5R 0201 COMMON
Near the GPU
Under the GPU
IFPC_I2CW_AUX
IFPC_I2CW_AUX
85DIFF_NETCLASS1
NV3V3
R701 10k 5 % 0402 COMMON
R702 10k 5 % 0402 COMMON
Q514A COMMON 2N7002DW SOT363
Q514B COMMON 2N7002DW SOT363
G S D
C1287 10nF 16V 10% X5R 0402 COMMON
HDMI
R27 2k 5 % 0402 COMMON
R42 2k 5 % 0402 COMMON
DDC_5V
C8 100pF 50V 5% C0G 0402 COMMON
IFPC_TXC
IFPC_TXC
IFPC_TXD0
IFPC_TXD0
IFPC_TXD1
IFPC_TXD1
IFPC_TXD2
IFPC_TXD2
DVI_HDMI_SIGNALS
C35 0.1uF 0402 COMMON
C36 0.1uF 0402 COMMON
C25 0.1uF 0402 COMMON
C26 0.1uF 0402 COMMON
C37 0.1uF 0402 COMMON
C38 0.1uF 0402 COMMON
C27 0.1uF 0402 COMMON
C28 0.1uF 0402 COMMON
IFPC_TXC_C1*
IFPC_TXC_C1
IFPC_TXD0_C1*
IFPC_TXD0_C1
IFPC_TXD1_C1*
IFPC_TXD1_C1
IFPC_TXD2_C1*
IFPC_TXD2_C1
R32 5.1ohm COMMON
R33 5.1ohm COMMON
R23 5.1ohm COMMON
R24 5.1ohm COMMON
R34 5.1ohm COMMON
R35 5.1ohm COMMON
R25 5.1ohm COMMON
R26 5.1ohm COMMON
IFPC_TXC_RC1*
IFPC_TXC_RC1
IFPC_TXD0_RC1*
IFPC_TXD0_RC1
IFPC_TXD1_RC1*
IFPC_TXD1_RC1
IFPC_TXD2_RC1*
IFPC_TXD2_RC1
I2CW_SDA_C
I2CW_SCL_C
SNN_HDMI_RESERVED
SNN_HDMI_CEC
J4
RECEPTACLE
HDMI_A_SMD
CONN SMD HDMI FEMALE RA 19 POS 0.50mm PITCH W/ SPRING
COMMON
20 SHIELD1
21 SHIELD2
19 HP_DET
18 +5V
17 DDC/CEC_GND
16 SDA
15 SCL
14 RESERVED
13 CEC
12 CK-
11 CK_SHIELD
10 CK+
9 D0-
8 D0_SHIELD
7 D0+
6 D1-
5 D1_SHIELD
4 D1+
3 D2-
2 D2_SHIELD
1 D2+
22 SHIELD3
23 SHIELD4
Hotplug Detection
1V8_AON
R774 10k 5 % 0402 COMMON
25 OUT
GPIO27_IFPC_HPD
Q522 MMBT2222A SOT23_1B1C1E COMMON
1B1C1E
not found
HDMI_C_HPD_R_Q
R760 100k 0402 5 % COMMON
HDMI_C_HPD_R
R753 0ohm 0402 0.05 ohm COMMON
HDMI_C_HPD_C
R765 100k 5 % 0402 COMMON
C1308 220pF 50V 5% C0G 0402 COMMON
C1305 220pF 50V 5% C0G 0402 NO STUFF
HDMI LEVEL SHIFTING PULL DOWNS
NV3V3
0.400 0
HDMI_PD_1
1G1D1S
Q516 2N7002W SOT323_1G1D1S COMMON
60V 0.115A 5000mohm@10V / 7500mohm@4.5V / 0mohm@2.5V 0.8A 0.12W 20V
R40 499ohm 1 % 0402 COMMON
R39 499ohm 1 % 0402 COMMON
R48 499ohm 1 % 0402 COMMON
R47 499ohm 1 % 0402 COMMON
R38 499ohm 1 % 0402 COMMON
R37 499ohm 1 % 0402 COMMON
R46 499ohm 1 % 0402 COMMON
R45 499ohm 1 % 0402 COMMON
IFPC_BEAD8
IFPC_BEAD7
IFPC_BEAD6
IFPC_BEAD5
IFPC_BEAD4
IFPC_BEAD3
IFPC_BEAD2
IFPC_BEAD1
LB4 600ohm COMMON BEAD_0402
LB3 600ohm COMMON BEAD_0402
LB8 600ohm COMMON BEAD_0402
LB7 600ohm COMMON BEAD_0402
LB2 600ohm COMMON BEAD_0402
LB1 600ohm COMMON BEAD_0402
LB6 600ohm COMMON BEAD_0402
LB5 600ohm COMMON BEAD_0402
Place to minimize stubs to these PDs

ASSEMBLY	<ASSEMBLY_DESCRIPTION>
PAGE DETAIL	IO: IFPC HDMI

ALL NVIDIA DESIGN SPECIFICATIONS, REFERENCE SPECIFICATIONS, REFERENCE BOARDS, FILES, DRAWINGS, DIAGNOSTICS, LISTS AND OTHER DOCUMENTS OR INFORMATION (TOGETHER AND SEPARATELY, 'MATERIALS') ARE BEING PROVIDED 'AS IS'. THE MATERIALS MAY CONTAIN KNOWN AND UNKNOWN VIOLATIONS OR DEVIATIONS OF INDUSTRY STANDARDS AND SPECIFICATIONS. NVIDIA MAKES NO WARRANTIES, EXPRESSED, IMPLIED, STATUTORY OR OTHERWISE WITH RESPECT TO THE MATERIALS OR OTHERWISE, AND EXPRESSLY DISCLAIMS ALL IMPLIED WARRANTIES INCLUDING, WITHOUT LIMITATION, THE WARRANTIES OF DESIGN, OF NONINFRINGEMENT, MERCHANTABILITY OR FITNESS FOR A PARTICULAR PURPOSE, OR ARISING FROM A COURSE OF DEALING, TRADE USAGE, TRADE PRACTICE, OR INDUSTRY STANDARDS.

RD Center
Colorful Co.,Ltd
深圳市七彩虹科技发展有限公司

Size	Document Number	Rev
Custom	PG161H6-E10	A

Date: Wednesday, October 31, 2018 Sheet 22 of 53

Page23: IFPD DP

Two cases to be considered:

1. DP AUX to DP connector: AUX AC coupled
2. DP AUX to DP-DVI dongle: AUX pass through

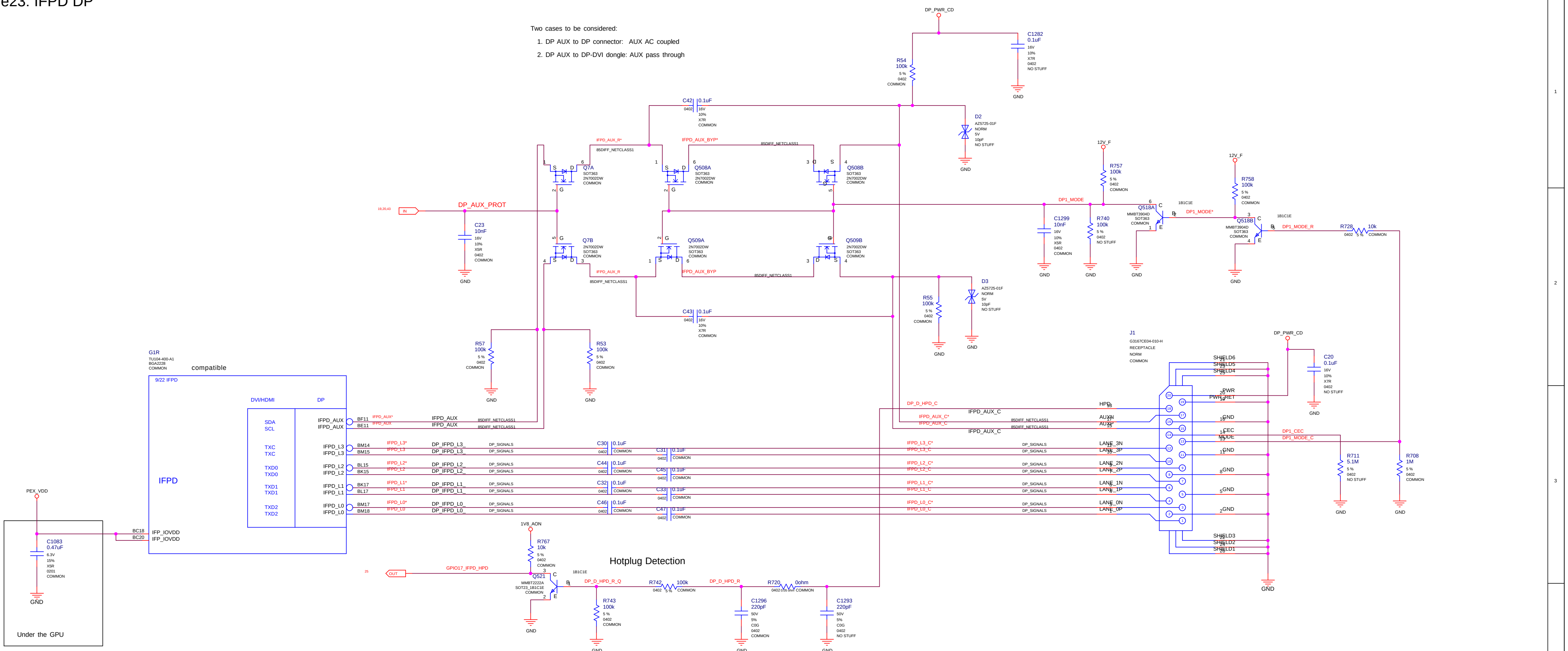
DP_PWR_CD
C1282 0.1uF 16V 10% X7R 0402 NO STUFF
R54 100k 5% 0402 COMMON
C42 0.1uF 0402 16V 10% X7R COMMON
D2 AZ5725-01F NORM 5V 10pF NO STUFF
IFPD_AUX_R*
IFPD_AUX_BYP*
85DIFF_NETCLASS1
Q7A SOT363 2N7002DW COMMON
Q508A SOT363 2N7002DW COMMON
Q508B SOT363 2N7002DW COMMON
DP_AUX_PROT
IN
C23 10nF 16V 10% X5R 0402 COMMON
Q7B 2N7002DW SOT363 COMMON
Q509A 2N7002DW SOT363 COMMON
Q509B 2N7002DW SOT363 COMMON
IFPD_AUX_R
IFPD_AUX_BYP
C43 0.1uF 0402 16V 10% X7R COMMON
R55 100k 5% 0402 COMMON
D3 AZ5725-01F NORM 5V 10pF NO STUFF
12V_F
R757 100k 5% 0402 COMMON
R758 100k 5% 0402 COMMON
DP1_MODE
DP1_MODE*
Q518A MMBT3904D SOT363 COMMON
Q518B MMBT3904D SOT363 COMMON
C1299 10nF 16V 10% X5R 0402 COMMON
R740 100k 5% 0402 NO STUFF
DP1_MODE_R
R728 10k 0402 5% COMMON
R57 100k 5% 0402 COMMON
R53 100k 5% 0402 COMMON
G1R TU104-400-A1 BGA2226 COMMON
compatible
9/22 IFPD
DVI/HDMI
DP
SDA SCL
TXC TXC
TXD0 TXD0
TXD1 TXD1
TXD2 TXD2
IFPD
IFPD_AUX IFPD_AUX
IFPD_L3 IFPD_L3
IFPD_L2 IFPD_L2
IFPD_L1 IFPD_L1
IFPD_L0 IFPD_L0
BF11 BE11 BM14 BM15 BL15 BK15 BK17 BL17 BM17 BM18
DP_IFPD_L3_ DP_IFPD_L2_ DP_IFPD_L1_ DP_IFPD_L0_
DP_SIGNALS
C30 C44 C32 C46 0.1uF COMMON
C31 C45 C33 C47 0.1uF COMMON
IFPD_L3_C* IFPD_L2_C* IFPD_L1_C* IFPD_L0_C*
IFPD_AUX_C* IFPD_AUX_C
DP_D_HPD_C
J1 G3167CE04-010-H RECEPTACLE NORM COMMON
SHIELD6 SHIELD5 SHIELD4 SHIELD3 SHIELD2 SHIELD1
PWR PWR_RET HPD AUXN AUXP CEC MODE GND
LANE_3N LANE_3P LANE_2N LANE_2P LANE_1N LANE_1P LANE_0N LANE_0P
DP1_CEC DP1_MODE_C
C20 0.1uF 16V 10% X7R 0402 NO STUFF
R711 5.1M 5% 0402 NO STUFF
R708 1M 5% 0402 COMMON
PEX_VDD
C1083 0.47uF 6.3V 15% X5R 0201 COMMON
BC18 BC20 IFP_IOVDD IFP_IOVDD
Under the GPU
1V8_AON
R767 10k 5% 0402 COMMON
Hotplug Detection
GPIO17_IFPD_HPD
OUT
Q521 MMBT2222A SOT23_1B1C1E COMMON
DP_D_HPD_R_Q
R742 100k 0402 5% COMMON
DP_D_HPD_R
R720 0ohm 0402 COMMON
R743 100k 5% 0402 COMMON
C1296 220pF 50V 5% C0G 0402 COMMON
C1293 220pF 50V 5% C0G 0402 NO STUFF
GND

Fused DP_PWR

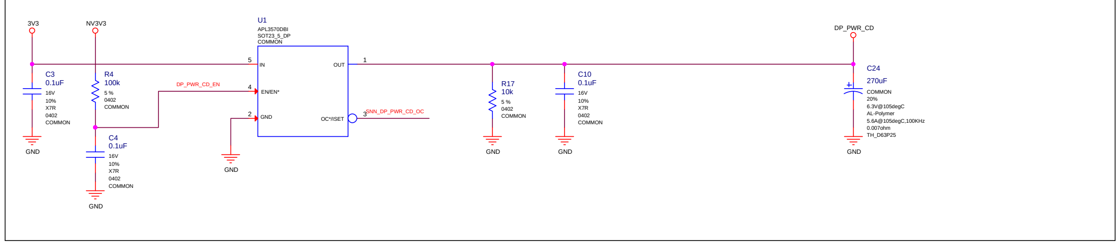
3V3
NV3V3
C3 0.1uF 16V 10% X7R 0402 COMMON
R4 100k 5% 0402 COMMON
C4 0.1uF 16V 10% X7R 0402 COMMON
U1 APL3570DBI SOT23_5_DP COMMON
IN OUT EN/EN* GND OC*/ISET
DP_PWR_CD_EN
SNN_DP_PWR_CD_OC
R17 10k 5% 0402 COMMON
C10 0.1uF 16V 10% X7R 0402 COMMON
DP_PWR_CD
C24 270uF COMMON 20% 6.3V@105degC AL-Polymer 5.6A@105degC,100KHz 0.007ohm TH_D63P25
GND

ASSEMBLY	<ASSEMBLY_DESCRIPTION>
PAGE DETAIL	IO: IFPD DP

ALL NVIDIA DESIGN SPECIFICATIONS, REFERENCE SPECIFICATIONS, REFERENCE BOARDS, FILES, DRAWINGS, DIAGNOSTICS, LISTS AND OTHER DOCUMENTS OR INFORMATION (TOGETHER AND SEPARATELY, 'MATERIALS') ARE BEING PROVIDED 'AS IS'. THE MATERIALS MAY CONTAIN KNOWN AND UNKNOWN VIOLATIONS OR DEVIATIONS OF INDUSTRY STANDARDS AND SPECIFICATIONS. NVIDIA MAKES NO WARRANTIES, EXPRESSED, IMPLIED, STATUTORY OR OTHERWISE WITH RESPECT TO THE MATERIALS OR OTHERWISE WITH RESPECT TO THE MATERIALS AND EXPRESSLY DISCLAIMS ALL IMPLIED WARRANTIES INCLUDING, WITHOUT LIMITATION, THE WARRANTIES OF DESIGN, OF NONINFRINGEMENT, MERCHANTABILITY OR FITNESS FOR A PARTICULAR PURPOSE, OR ARISING FROM A COURSE OF DEALING, TRADE USAGE, TRADE PRACTICE, OR INDUSTRY STANDARDS.

RD Center
Colorful Co.,Ltd
深圳市七彩虹科技发展有限公司

Size	Document Number	Rev
Custom	PG161H6-E10	A

Date: Wednesday, October 31, 2018 Sheet 23 of 53

Page24: NVHS Interface and Frame Lock

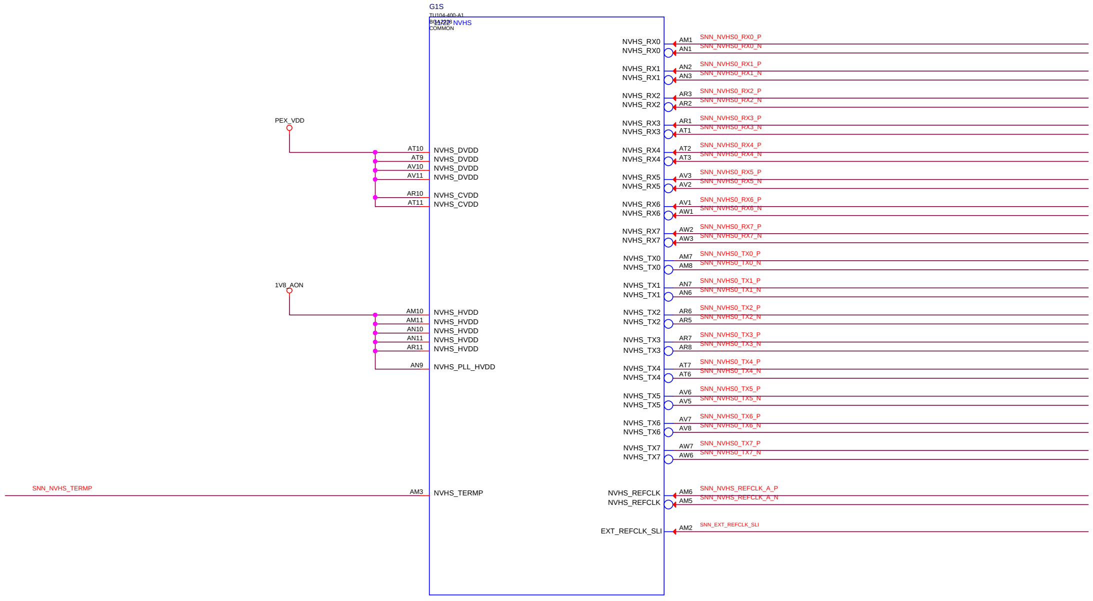
G1S
TU104-400-A1
BGA2228
11/22 NVHS
COMMON
PEX_VDD
AT10 NVHS_DVDD
AT9 NVHS_DVDD
AV10 NVHS_DVDD
AV11 NVHS_DVDD
AR10 NVHS_CVDD
AT11 NVHS_CVDD
1V8_AON
AM10 NVHS_HVDD
AM11 NVHS_HVDD
AN10 NVHS_HVDD
AN11 NVHS_HVDD
AR11 NVHS_HVDD
AN9 NVHS_PLL_HVDD
SNN_NVHS_TERMP
AM3 NVHS_TERMP
NVHS_RX0 AM1 SNN_NVHS0_RX0_P
NVHS_RX0 AN1 SNN_NVHS0_RX0_N
NVHS_RX1 AN2 SNN_NVHS0_RX1_P
NVHS_RX1 AN3 SNN_NVHS0_RX1_N
NVHS_RX2 AR3 SNN_NVHS0_RX2_P
NVHS_RX2 AR2 SNN_NVHS0_RX2_N
NVHS_RX3 AR1 SNN_NVHS0_RX3_P
NVHS_RX3 AT1 SNN_NVHS0_RX3_N
NVHS_RX4 AT2 SNN_NVHS0_RX4_P
NVHS_RX4 AT3 SNN_NVHS0_RX4_N
NVHS_RX5 AV3 SNN_NVHS0_RX5_P
NVHS_RX5 AV2 SNN_NVHS0_RX5_N
NVHS_RX6 AV1 SNN_NVHS0_RX6_P
NVHS_RX6 AW1 SNN_NVHS0_RX6_N
NVHS_RX7 AW2 SNN_NVHS0_RX7_P
NVHS_RX7 AW3 SNN_NVHS0_RX7_N
NVHS_TX0 AM7 SNN_NVHS0_TX0_P
NVHS_TX0 AM8 SNN_NVHS0_TX0_N
NVHS_TX1 AN7 SNN_NVHS0_TX1_P
NVHS_TX1 AN6 SNN_NVHS0_TX1_N
NVHS_TX2 AR6 SNN_NVHS0_TX2_P
NVHS_TX2 AR5 SNN_NVHS0_TX2_N
NVHS_TX3 AR7 SNN_NVHS0_TX3_P
NVHS_TX3 AR8 SNN_NVHS0_TX3_N
NVHS_TX4 AT7 SNN_NVHS0_TX4_P
NVHS_TX4 AT6 SNN_NVHS0_TX4_N
NVHS_TX5 AV6 SNN_NVHS0_TX5_P
NVHS_TX5 AV5 SNN_NVHS0_TX5_N
NVHS_TX6 AV7 SNN_NVHS0_TX6_P
NVHS_TX6 AV8 SNN_NVHS0_TX6_N
NVHS_TX7 AW7 SNN_NVHS0_TX7_P
NVHS_TX7 AW6 SNN_NVHS0_TX7_N
NVHS_REFCLK AM6 SNN_NVHS_REFCLK_A_P
NVHS_REFCLK AM5 SNN_NVHS_REFCLK_A_N
EXT_REFCLK_SLI AM2 SNN_EXT_REFCLK_SLI

ASSEMBLY	<ASSEMBLY_DESCRIPTION>
PAGE DETAIL	IO: NVHS Interface and Frame Lock

ALL NVIDIA DESIGN SPECIFICATIONS, REFERENCE SPECIFICATIONS, REFERENCE BOARDS, FILES, DRAWINGS, DIAGNOSTICS, LISTS AND OTHER DOCUMENTS OR INFORMATION (TOGETHER AND SEPARATELY, 'MATERIALS') ARE BEING PROVIDED 'AS IS'. THE MATERIALS MAY CONTAIN KNOWN AND UNKNOWN VIOLATIONS OR DEVIATIONS OF INDUSTRY STANDARDS AND SPECIFICATIONS. NVIDIA MAKES NO WARRANTIES, EXPRESSED, IMPLIED, STATUTORY OR OTHERWISE WITH RESPECT TO THE MATERIALS OR OTHERWISE, AND EXPRESSLY DISCLAIMS ALL IMPLIED WARRANTIES INCLUDING, WITHOUT LIMITATION, THE WARRANTIES OF DESIGN, OF NONINFRINGEMENT, MERCHANTABILITY OR FITNESS FOR A PARTICULAR PURPOSE, OR ARISING FROM A COURSE OF DEALING, TRADE USAGE, TRADE PRACTICE, OR INDUSTRY STANDARDS.

RD Center
Colorful Co.,Ltd
深圳市七彩虹科技发展有限公司

Size Custom	Document Number PG161H6-E10	Rev A
Date: Wednesday, October 31, 2018	Sheet 24 of 53	

Page25: MISC1: Fan, Thermal, JTAG, GPIO

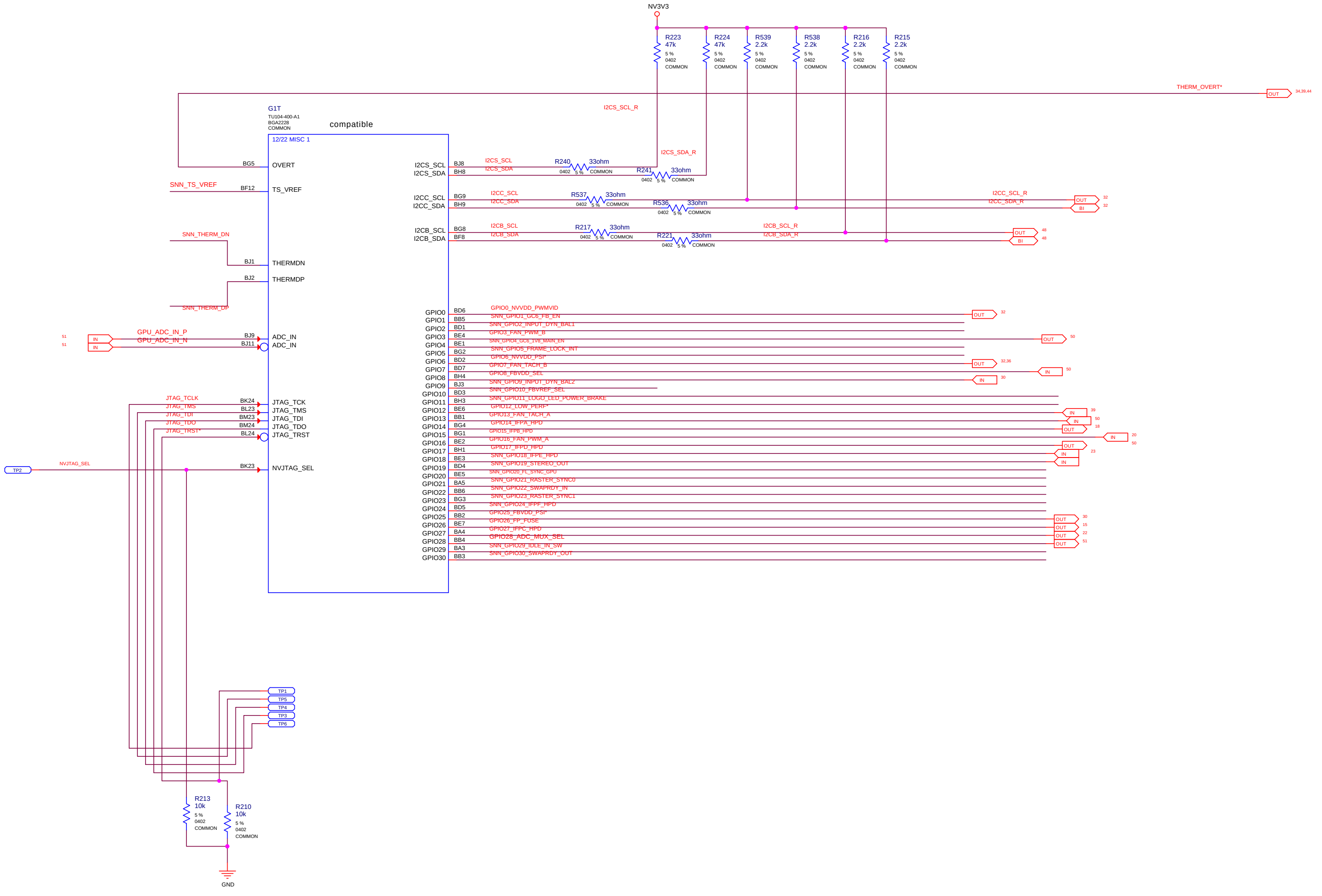
NV3V3
R223
47k
R224
47k
R539
2.2k
R538
2.2k
R216
2.2k
R215
2.2k
5 %
0402
COMMON
THERM_OVERT*
OUT
34,39,44
I2CS_SCL_R
I2CS_SDA_R
G1T
TU104-400-A1
BGA2228
COMMON
compatible
12/22 MISC 1
BG5
OVERT
SNN_TS_VREF
BF12
TS_VREF
SNN_THERM_DN
BJ1
THERMDN
BJ2
THERMDP
SNN_THERM_DP
51
IN
GPU_ADC_IN_P
GPU_ADC_IN_N
BJ9
BJ11
ADC_IN
ADC_IN
JTAG_TCLK
JTAG_TMS
JTAG_TDI
JTAG_TDO
JTAG_TRST*
BK24
BL23
BM23
BM24
BL24
JTAG_TCK
JTAG_TMS
JTAG_TDI
JTAG_TDO
JTAG_TRST
TP2
NVJTAG_SEL
BK23
NVJTAG_SEL
I2CS_SCL
I2CS_SDA
BJ8
BH8
R240
33ohm
R241
33ohm
I2CC_SCL
I2CC_SDA
BG9
BH9
R537
33ohm
R536
33ohm
I2CC_SCL_R
I2CC_SDA_R
OUT
BI
32
I2CB_SCL
I2CB_SDA
BG8
BF8
R217
33ohm
R221
33ohm
I2CB_SCL_R
I2CB_SDA_R
48
GPIO0 BD6 GPIO0_NVVDD_PWMVID OUT 32
GPIO1 BB5 SNN_GPIO1_GC6_FB_EN
GPIO2 BD1 SNN_GPIO2_INPUT_DYN_BAL1
GPIO3 BE4 GPIO3_FAN_PWM_B OUT 50
GPIO4 BE1 SNN_GPIO4_GC6_1V8_MAIN_EN
GPIO5 BG2 SNN_GPIO5_FRAME_LOCK_INT
GPIO6 BD2 GPIO6_NVVDD_PSI* OUT 32,36
GPIO7 BD7 GPIO7_FAN_TACH_B IN 50
GPIO8 BH4 GPIO8_FBVDD_SEL IN 30
GPIO9 BJ3 SNN_GPIO9_INPUT_DYN_BAL2
GPIO10 BD3 SNN_GPIO10_FBVREF_SEL
GPIO11 BH3 SNN_GPIO11_LOGO_LED_POWER_BRAKE
GPIO12 BE6 GPIO12_LOW_PERF* IN 39
GPIO13 BB1 GPIO13_FAN_TACH_A IN 50
GPIO14 BG4 GPIO14_IFPA_HPD OUT 18
GPIO15 BG1 GPIO15_IFPB_HPD IN 20
GPIO16 BE2 GPIO16_FAN_PWM_A OUT 50
GPIO17 BH1 GPIO17_IFPD_HPD IN 23
GPIO18 BE3 SNN_GPIO18_IFPE_HPD IN
GPIO19 BD4 SNN_GPIO19_STEREO_OUT
GPIO20 BE5 SNN_GPIO20_FL_SYNC_GPU
GPIO21 BA5 SNN_GPIO21_RASTER_SYNC0
GPIO22 BB6 SNN_GPIO22_SWAPRDY_IN
GPIO23 BG3 SNN_GPIO23_RASTER_SYNC1
GPIO24 BD5 SNN_GPIO24_IFPF_HPD
GPIO25 BB2 GPIO25_FBVDD_PSI* OUT 30
GPIO26 BE7 GPIO26_FP_FUSE OUT 15
GPIO27 BA4 GPIO27_IFPC_HPD OUT 22
GPIO28 BB4 GPIO28_ADC_MUX_SEL OUT 51
GPIO29 BA3 SNN_GPIO29_IDLE_IN_SW
GPIO30 BB3 SNN_GPIO30_SWAPRDY_OUT
TP1
TP5
TP4
TP3
TP6
R213
10k
R210
10k
GND

ASSEMBLY	<ASSEMBLY_DESCRIPTION>
PAGE DETAIL	MISC1: Thermal, JTAG, GPIO,STEREO

ALL NVIDIA DESIGN SPECIFICATIONS, REFERENCE SPECIFICATIONS, REFERENCE BOARDS, FILES, DRAWINGS, DIAGNOSTICS, LISTS AND OTHER DOCUMENTS OR INFORMATION (TOGETHER AND SEPARATELY, 'MATERIALS') ARE BEING PROVIDED 'AS IS'. THE MATERIALS MAY CONTAIN KNOWN AND UNKNOWN VIOLATIONS OR DEVIATIONS OF INDUSTRY STANDARDS AND SPECIFICATIONS. NVIDIA MAKES NO WARRANTIES, EXPRESSED, IMPLIED, STATUTORY OR OTHERWISE WITH RESPECT TO THE MATERIALS OR OTHERWISE, AND EXPRESSLY DISCLAIMS ALL IMPLIED WARRANTIES INCLUDING, WITHOUT LIMITATION, THE WARRANTIES OF DESIGN, OF NONINFRINGEMENT, MERCHANTABILITY OR FITNESS FOR A PARTICULAR PURPOSE, OR ARISING FROM A COURSE OF DEALING, TRADE USAGE, TRADE PRACTICE, OR INDUSTRY STANDARDS.

RD Center
Colorful Co.,Ltd
深圳市七彩虹科技发展有限公司

Size Custom
Document Number PG161H6-E10
Rev A
Date: Wednesday, October 31, 2018
Sheet 25 of 53

Page26: MISC2: ROM, XTAL, Straps

STRAP2	STRAP1	STRAP0	RAMCFG[4:0]
L	L	L	00000
L	L	H	00001
L	H	L	00010
L	H	H	00011
H	H	L	00110
H	H	H	00111
L	L	M	01000

RAMCFG[4:0]	DENSITY	WIDTH	VENDOR	DIE
00000	8Gb	256-bit	Samsung	C
00001	8Gb	256-bit	Micron	A
00010	8Gb	256-bit	Hynix	M
00011	8Gb	256-bit	Samsung	C
00100	8Gb	256-bit	Micron	A
00101	8Gb	256-bit	Hynix	M
00110	16Gb	256-bit	Samsung	M
00111				

ROM_SO	ROM_SI	ROM_SCLK	DUMMY[2:0],FS_OVERT	1:ENABLE 0:DISABLE	
L	L	L	XXX1	FS_OVERT ENABLE	DEFAULT
L	L	M	XXX0	FS_OVERT DISABLE	

STRAP5	STRAP4	STRAP3	SMB_ALT_ADDR	DEVID_SEL	PCIE_CFG	VGA_DEVICE
M	H	H	1	1	1	1
M	H	L	1	1	1	0
M	L	H	1	1	0	1
M	L	L	1	1	0	0
L	H	M	1	0	1	1
L	M	H	1	0	1	0
L	M	L	1	0	0	1
L	L	M	1	0	0	0
H	H	H	0	1	1	1
H	H	L	0	1	1	0
H	L	H	0	1	0	1
H	L	L	0	1	0	0
L	H	H	0	0	1	1
L	H	L	0	0	1	0
L	L	H	0	0	0	1 DEFAULT
L	L	L	0	0	0	0

H=High :Tied to 1.8V
M=Middle:Tied to 0.9V
L=Low :Tied to 0V

1:SMB_ALT_ADDR ENABLE
0:SMB_ALT_ADDR DISABLE

1:DEVID_SEL REBRAND
0:DEVID_SEL ORIGNAL

1:PCIE_CFG LOW POWER
0:PCIE_CFG HIGH POWER

1:VGA_DEVICE ENABLE
0:VGA_DEVICE DISABLE

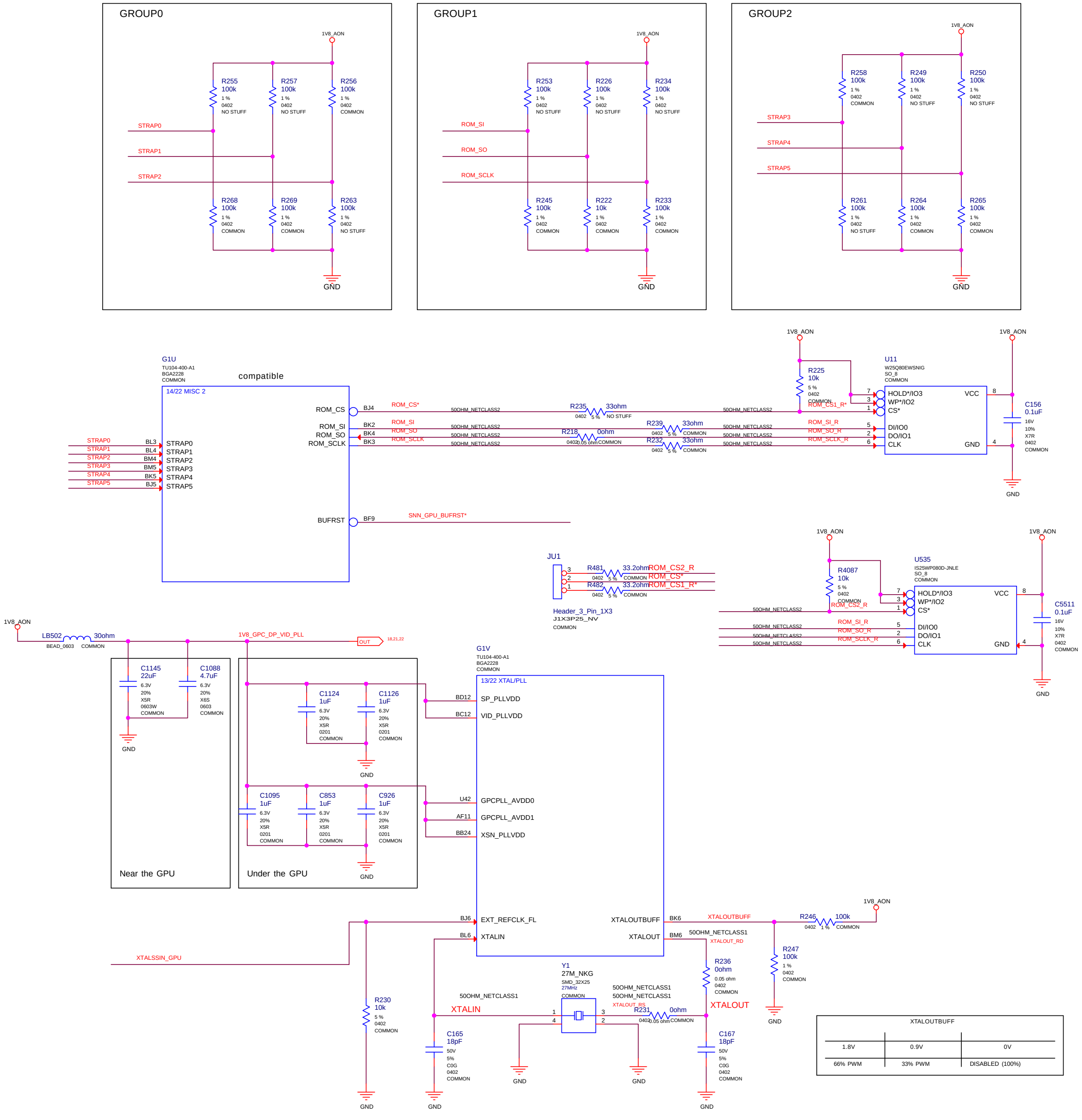
GROUP0
1V8_AON
R255 100k 1 % 0402 NO STUFF
R257 100k 1 % 0402 NO STUFF
R256 100k 1 % 0402 COMMON
STRAP0
STRAP1
STRAP2
R268 100k 1 % 0402 COMMON
R269 100k 1 % 0402 COMMON
R263 100k 1 % 0402 NO STUFF
GND
GROUP1
1V8_AON
R253 100k 1 % 0402 NO STUFF
R226 100k 1 % 0402 NO STUFF
R234 100k 1 % 0402 NO STUFF
ROM_SI
ROM_SO
ROM_SCLK
R245 100k 1 % 0402 COMMON
R222 10k 1 % 0402 COMMON
R233 100k 1 % 0402 COMMON
GND
GROUP2
1V8_AON
R258 100k 1 % 0402 COMMON
R249 100k 1 % 0402 NO STUFF
R250 100k 1 % 0402 NO STUFF
STRAP3
STRAP4
STRAP5
R261 100k 1 % 0402 NO STUFF
R264 100k 1 % 0402 COMMON
R265 100k 1 % 0402 COMMON
GND
G1U
TU104-400-A1
BGA2228
COMMON
compatible
14/22 MISC 2
ROM_CS
ROM_SI
ROM_SO
ROM_SCLK
BJ4
BK2
BK4
BK3
ROM_CS*
ROM_SI
ROM_SO
ROM_SCLK
STRAP0 BL3 STRAP0
STRAP1 BL4 STRAP1
STRAP2 BM4 STRAP2
STRAP3 BM5 STRAP3
STRAP4 BK5 STRAP4
STRAP5 BJ5 STRAP5
BUFRST
BF9
SNN_GPU_BUFRST*
50OHM_NETCLASS2
R235 33ohm 0402 5 % NO STUFF
R239 33ohm 0402 5 % COMMON
R218 0ohm 0402 0.05 ohm COMMON
R232 33ohm 0402 5 % COMMON
1V8_AON
R225 10k 5 % 0402 COMMON
ROM_CS1_R*
ROM_SI_R
ROM_SO_R
ROM_SCLK_R
U11
W25Q80EWSNIG
SO_8
COMMON
HOLD*/IO3
WP*/IO2
CS*
DI/IO0
DO/IO1
CLK
VCC
GND
C156 0.1uF 16V 10% X7R 0402 COMMON
GND
JU1
R481 33.2ohm 0402 5 % COMMON
R482 33.2ohm 0402 5 % COMMON
ROM_CS2_R
ROM_CS*
ROM_CS1_R*
Header_3_Pin_1X3
J1X3P25_NV
COMMON
1V8_AON
R4087 10k 5 % 0402 COMMON
ROM_CS2_R
U535
IS25WP080D-JNLE
SO_8
COMMON
HOLD*/IO3
WP*/IO2
CS*
DI/IO0
DO/IO1
CLK
VCC
GND
C5511 0.1uF 16V 10% X7R 0402 COMMON
GND
1V8_AON
LB502 30ohm
BEAD_0603 COMMON
1V8_GPC_DP_VID_PLL
OUT
18,21,22
C1145 22uF 6.3V 20% X5R 0603W COMMON
C1088 4.7uF 6.3V 20% X6S 0603 COMMON
GND
Near the GPU
C1124 1uF 6.3V 20% X5R 0201 COMMON
C1126 1uF 6.3V 20% X5R 0201 COMMON
C1095 1uF 6.3V 20% X5R 0201 COMMON
C853 1uF 6.3V 20% X5R 0201 COMMON
C926 1uF 6.3V 20% X5R 0201 COMMON
GND
Under the GPU
G1V
TU104-400-A1
BGA2228
COMMON
13/22 XTAL/PLL
BD12 SP_PLLVDD
BC12 VID_PLLVDD
U42 GPCPLL_AVDD0
AF11 GPCPLL_AVDD1
BB24 XSN_PLLVDD
BJ6 EXT_REFCLK_FL
BL6 XTALIN
XTALOUTBUFF BK6
XTALOUT BM6
XTALSSIN_GPU
XTALOUTBUFF
R246 100k 0402 1 % COMMON
1V8_AON
50OHM_NETCLASS1
XTALOUT_RD
R247 100k 1 % 0402 COMMON
R236 0ohm 0.05 ohm 0402 COMMON
R230 10k 5 % 0402 COMMON
Y1
27M_NKG
SMD_32X25
27MHz
COMMON
XTALIN
XTALOUT
XTALOUT_RS
R231 0ohm 0402 0.05 ohm COMMON
C165 18pF 50V 5% C0G 0402 COMMON
C167 18pF 50V 5% C0G 0402 COMMON
GND

XTALOUTBUFF

1.8V	0.9V	0V
66% PWM	33% PWM	DISABLED (100%)

ASSEMBLY	<ASSEMBLY_DESCRIPTION>
PAGE DETAIL	MISC2: ROM, XTAL,STRAPS

ALL NVIDIA DESIGN SPECIFICATIONS, REFERENCE SPECIFICATIONS, REFERENCE BOARDS, FILES, DRAWINGS, DIAGNOSTICS, LISTS AND OTHER DOCUMENTS OR INFORMATION (TOGETHER AND SEPARATELY, 'MATERIALS') ARE BEING PROVIDED 'AS IS'. THE MATERIALS MAY CONTAIN KNOWN AND UNKNOWN VIOLATIONS OR DEVIATIONS OF INDUSTRY STANDARDS AND SPECIFICATIONS. NVIDIA MAKES NO WARRANTIES, EXPRESSED, IMPLIED, STATUTORY OR OTHERWISE WITH RESPECT TO THE MATERIALS OR OTHERWISE, AND EXPRESSLY DISCLAIMS ALL IMPLIED WARRANTIES INCLUDING, WITHOUT LIMITATION, THE WARRANTIES OF DESIGN, OF NONINFRINGEMENT, MERCHANTABILITY OR FITNESS FOR A PARTICULAR PURPOSE, OR ARISING FROM A COURSE OF DEALING, TRADE USAGE, TRADE PRACTICE, OR INDUSTRY STANDARDS.

RD Center
Colorful Co.,Ltd
深圳市七彩虹科技 发 展 有限 公 司

Size	Document Number	Rev
Custom	PG161H6-E10	A

Date: Wednesday, October 31, 2018 Sheet 26 of 53

Page27: PS: 1V8_AON

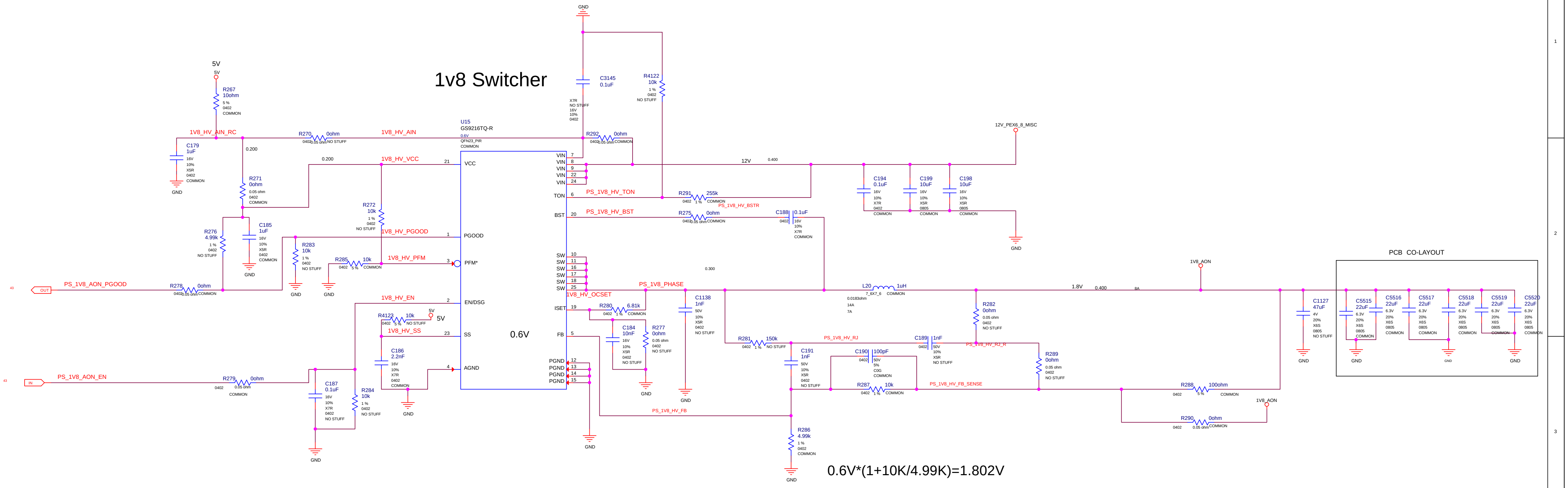
1v8 Switcher
U15
GS9216TQ-R
QFN23_PIR
COMMON
VCC
PGOOD
PFM*
EN/DSG
SS
AGND
VIN
TON
BST
SW
ISET
FB
PGND
0.6V
5V
GND
12V
1.8V
1V8_AON
12V_PEX6_8_MISC
1V8_HV_AIN_RC
1V8_HV_AIN
1V8_HV_VCC
1V8_HV_PGOOD
1V8_HV_PFM
1V8_HV_EN
1V8_HV_SS
1V8_HV_OCSET
PS_1V8_HV_TON
PS_1V8_HV_BST
PS_1V8_HV_BSTR
PS_1V8_PHASE
PS_1V8_HV_RJ
PS_1V8_HV_RJ_R
PS_1V8_HV_FB_SENSE
PS_1V8_HV_FB
PS_1V8_AON_PGOOD
PS_1V8_AON_EN
OUT
IN
43
R267 10ohm
R270 0ohm
R271 0ohm
R272 10k
R275 0ohm
R276 4.99k
R277 0ohm
R278 0ohm
R279 0ohm
R280 6.81k
R281 150k
R282 0ohm
R283 10k
R284 10k
R285 10k
R286 4.99k
R287 10k
R288 100ohm
R289 0ohm
R290 0ohm
R291 255k
R292 0ohm
R4122 10k
R4123 10k
C179 1uF
C184 10nF
C185 1uF
C186 2.2nF
C187 0.1uF
C188 0.1uF
C189 1nF
C190 100pF
C191 1nF
C194 0.1uF
C198 10uF
C199 10uF
C1127 47uF
C1138 1nF
C3145 0.1uF
C5515 22uF
C5516 22uF
C5517 22uF
C5518 22uF
C5519 22uF
C5520 22uF
L20 1uH
7_6X7_6
0.0183ohm
14A
7A
8A
0.200
0.300
0.400
PCB CO-LAYOUT
NO STUFF
COMMON

0.6V*(1+10K/4.99K)=1.802V

ASSEMBLY <ASSEMBLY_DESCRIPTION>
PAGE DETAIL PS: 1V8_AON

ALL NVIDIA DESIGN SPECIFICATIONS, REFERENCE SPECIFICATIONS, REFERENCE BOARDS, FILES, DRAWINGS, DIAGNOSTICS, LISTS AND OTHER DOCUMENTS OR INFORMATION (TOGETHER AND SEPARATELY, 'MATERIALS') ARE BEING PROVIDED 'AS IS'. THE MATERIALS MAY CONTAIN KNOWN AND UNKNOWN VIOLATIONS OR DEVIATIONS OF INDUSTRY STANDARDS AND SPECIFICATIONS. NVIDIA MAKES NO WARRANTIES, EXPRESSED, IMPLIED, STATUTORY OR OTHERWISE WITH RESPECT TO THE MATERIALS OR OTHERWISE, AND EXPRESSLY DISCLAIMS ALL IMPLIED WARRANTIES INCLUDING, WITHOUT LIMITATION, THE WARRANTIES OF DESIGN, OF NONINFRINGEMENT, MERCHANTABILITY OR FITNESS FOR A PARTICULAR PURPOSE, OR ARISING FROM A COURSE OF DEALING, TRADE USAGE, TRADE PRACTICE, OR INDUSTRY STANDARDS.

RD Center
Colorful Co.,Ltd
深圳市七彩虹科技发展有限公司

Size	Document Number	Rev
Custom	PG161H6-E10	A

Date: Friday, November 09, 2018 Sheet 27 of 53

Page28: PS: 5V

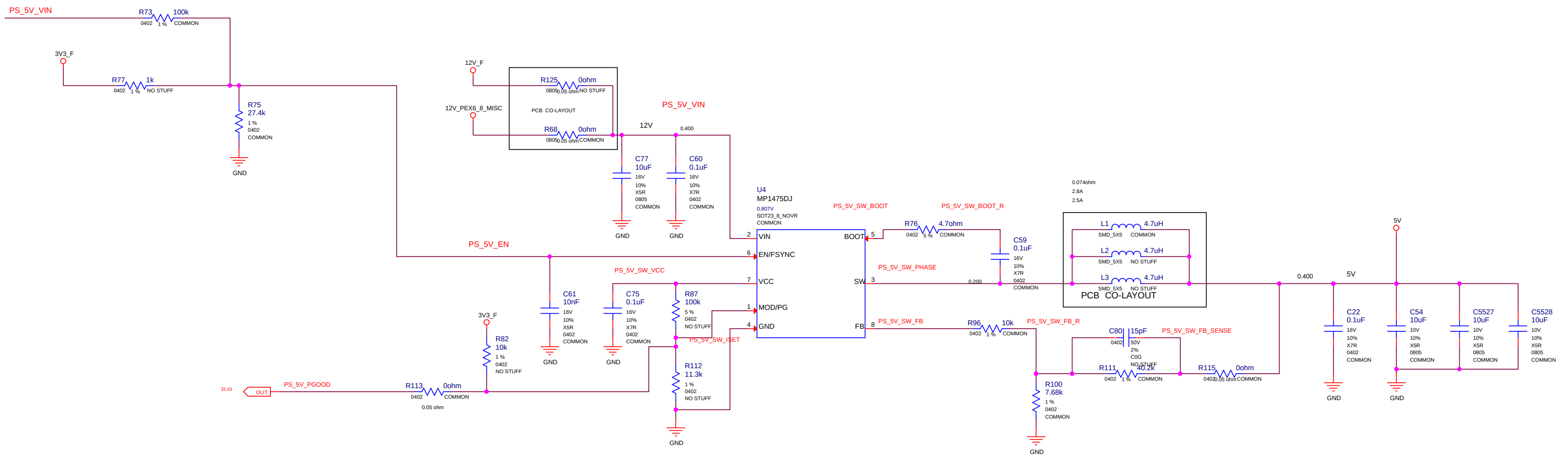
PS_5V_VIN
R73 100k
0402 1 % COMMON
3V3_F
R77 1k
0402 1 % NO STUFF
R75
27.4k
1 %
0402
COMMON
GND
12V_F
12V_PEX6_8_MISC
PCB CO-LAYOUT
R125 0ohm
0805 0.05 ohm NO STUFF
R68 0ohm
0805 0.05 ohm COMMON
PS_5V_VIN
12V
0.400
C77
10uF
16V
10%
X5R
0805
COMMON
C60
0.1uF
16V
10%
X7R
0402
COMMON
GND
GND
U4
MP1475DJ
0.807V
SOT23_8_NOVR
COMMON
2 VIN
6 EN/FSYNC
7 VCC
1 MOD/PG
4 GND
BOOT 5
SW 3
FB 8
PS_5V_EN
PS_5V_SW_VCC
C61
10nF
16V
10%
X5R
0402
COMMON
C75
0.1uF
16V
10%
X7R
0402
COMMON
R87
100k
5 %
0402
NO STUFF
PS_5V_SW_ISET
R112
11.3k
1 %
0402
NO STUFF
GND
3V3_F
R82
10k
1 %
0402
NO STUFF
32,43
OUT
PS_5V_PGOOD
R113 0ohm
0402 COMMON
0.05 ohm
PS_5V_SW_BOOT
PS_5V_SW_BOOT_R
R76 4.7ohm
0402 5 % COMMON
C59
0.1uF
16V
10%
X7R
0402
COMMON
PS_5V_SW_PHASE
0.200
0.074ohm
2.8A
2.5A
L1 4.7uH
SMD_5X5 COMMON
L2 4.7uH
SMD_5X5 NO STUFF
L3 4.7uH
SMD_5X5 NO STUFF
PCB CO-LAYOUT
PS_5V_SW_FB
R96 10k
0402 1 % COMMON
PS_5V_SW_FB_R
C80 15pF
0402 50V
2%
C0G
NO STUFF
PS_5V_SW_FB_SENSE
R111 40.2k
0402 1 % COMMON
R115 0ohm
0402 0.05 ohm COMMON
R100
7.68k
1 %
0402
COMMON
GND
0.400
5V
5V
C22
0.1uF
16V
10%
X7R
0402
COMMON
C54
10uF
10V
10%
X5R
0805
COMMON
C5527
10uF
10V
10%
X5R
0805
COMMON
C5528
10uF
10V
10%
X5R
0805
COMMON
GND
GND

0.8V*(1+40.2K/7.68K)=4.9875V

ASSEMBLY	<ASSEMBLY_DESCRIPTION>
PAGE DETAIL	PS: 5V

ALL NVIDIA DESIGN SPECIFICATIONS, REFERENCE SPECIFICATIONS, REFERENCE BOARDS, FILES, DRAWINGS, DIAGNOSTICS, LISTS AND OTHER DOCUMENTS OR INFORMATION (TOGETHER AND SEPARATELY, 'MATERIALS') ARE BEING PROVIDED 'AS IS'. THE MATERIALS MAY CONTAIN KNOWN AND UNKNOWN VIOLATIONS OR DEVIATIONS OF INDUSTRY STANDARDS AND SPECIFICATIONS. NVIDIA MAKES NO WARRANTIES, EXPRESSED, IMPLIED, STATUTORY OR OTHERWISE WITH RESPECT TO THE MATERIALS OR OTHERWISE, AND EXPRESSLY DISCLAIMS ALL IMPLIED WARRANTIES INCLUDING, WITHOUT LIMITATION, THE WARRANTIES OF DESIGN, OF NONINFRINGEMENT, MERCHANTABILITY OR FITNESS FOR A PARTICULAR PURPOSE, OR ARISING FROM A COURSE OF DEALING, TRADE USAGE, TRADE PRACTICE, OR INDUSTRY STANDARDS.

RD Center
Colorful Co.,Ltd
深圳市七彩虹科技发展有限公司

Size	Document Number	Rev
Custom	PG161H6-E10	A

Date: Tuesday, November 06, 2018 Sheet 28 of 53

Page29: PS: PEXVDD

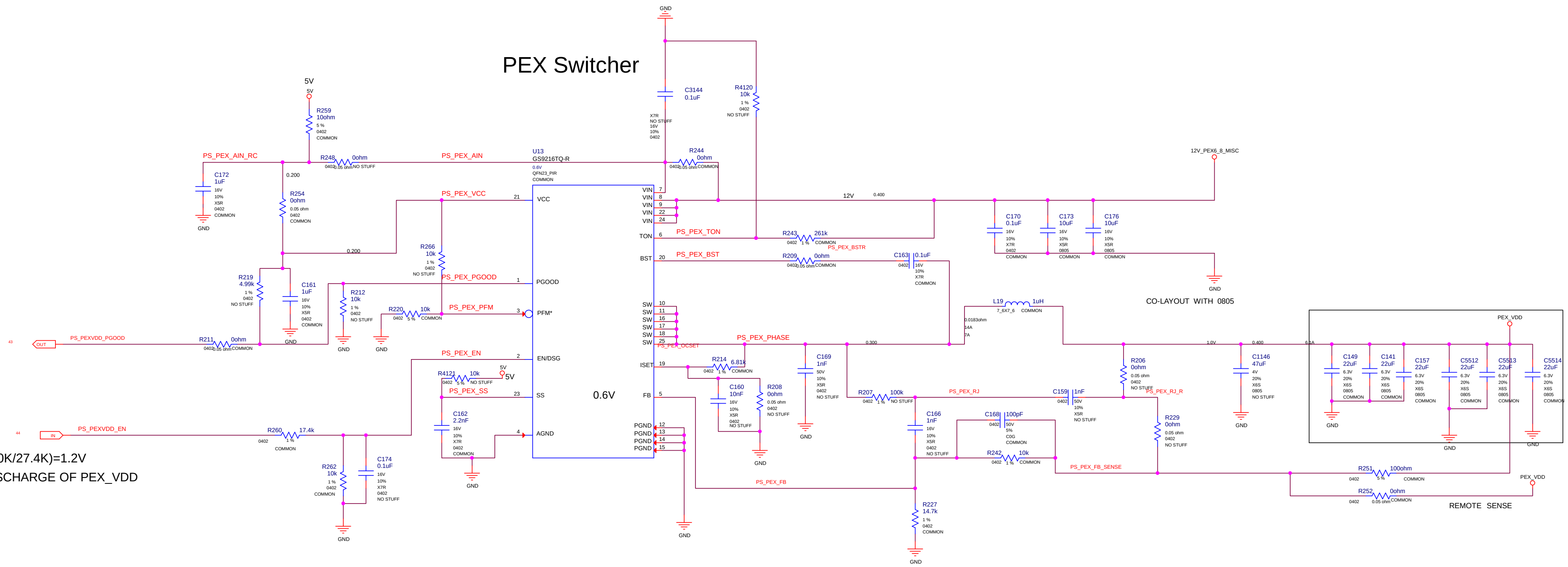
PEX Switcher
GND
C3144
0.1uF
X7R
NO STUFF
16V
10%
0402
R4120
10k
1 %
0402
NO STUFF
5V
5V
R259
10ohm
5 %
0402
COMMON
PS_PEX_AIN_RC
R248
0ohm
0402
0.05 ohm
NO STUFF
PS_PEX_AIN
U13
GS9216TQ-R
0.6V
QFN23_PIR
COMMON
R244
0ohm
0402
0.05 ohm
COMMON
12V_PEX6_8_MISC
C172
1uF
16V
10%
X5R
0402
COMMON
GND
0.200
R254
0ohm
0.05 ohm
0402
COMMON
PS_PEX_VCC
21
VCC
VIN 7
VIN 8
VIN 9
VIN 22
VIN 24
12V
0.400
C170
0.1uF
16V
10%
X7R
0402
COMMON
C173
10uF
16V
10%
X5R
0805
COMMON
C176
10uF
16V
10%
X5R
0805
COMMON
TON 6
PS_PEX_TON
R243
261k
0402
1 %
COMMON
PS_PEX_BSTR
0.200
R266
10k
1 %
0402
NO STUFF
BST 20
PS_PEX_BST
R209
0ohm
0402
0.05 ohm
COMMON
C163
0.1uF
0402
16V
10%
X7R
COMMON
GND
R219
4.99k
1 %
0402
NO STUFF
C161
1uF
16V
10%
X5R
0402
COMMON
PS_PEX_PGOOD
1
PGOOD
R212
10k
1 %
0402
NO STUFF
CO-LAYOUT WITH 0805
L19
1uH
7_6X7_6
COMMON
0.0183ohm
14A
7A
R220
10k
0402
5 %
COMMON
PS_PEX_PFM
3
PFM*
SW 10
SW 11
SW 16
SW 17
SW 18
SW 25
PS_PEX_OCSET
PS_PEX_PHASE
0.300
1.0V
0.400
6.1A
PEX_VDD
43
OUT
PS_PEXVDD_PGOOD
R211
0ohm
0402
0.05 ohm
COMMON
GND
GND
GND
PS_PEX_EN
2
EN/DSG
ISET 19
R214
6.81k
0402
1 %
COMMON
C169
1nF
50V
10%
X5R
0402
NO STUFF
R206
0ohm
0.05 ohm
0402
NO STUFF
C1146
47uF
4V
20%
X6S
0805
NO STUFF
C149
22uF
6.3V
20%
X6S
0805
COMMON
C141
22uF
6.3V
20%
X6S
0805
COMMON
C157
22uF
6.3V
20%
X6S
0805
COMMON
C5512
22uF
6.3V
20%
X6S
0805
COMMON
C5513
22uF
6.3V
20%
X6S
0805
COMMON
C5514
22uF
6.3V
20%
X6S
0805
COMMON
R4121
10k
0402
5 %
NO STUFF
5V
5V
PS_PEX_SS
23
SS
0.6V
FB 5
C160
10nF
16V
10%
X5R
0402
NO STUFF
R208
0ohm
0.05 ohm
0402
NO STUFF
R207
100k
0402
1 %
NO STUFF
PS_PEX_RJ
C159
1nF
0402
50V
10%
X5R
NO STUFF
PS_PEX_RJ_R
R229
0ohm
0.05 ohm
0402
NO STUFF
GND
GND
GND
GND
C162
2.2nF
16V
10%
X7R
0402
COMMON
44
IN
PS_PEXVDD_EN
R260
17.4k
0402
1 %
COMMON
4
AGND
PGND 12
PGND 13
PGND 14
PGND 15
C166
1nF
16V
10%
X5R
0402
NO STUFF
C168
100pF
0402
50V
5%
C0G
COMMON
R242
10k
0402
1 %
COMMON
GND
PS_PEX_FB_SENSE
R251
100ohm
0402
5 %
COMMON
R262
10k
1 %
0402
COMMON
C174
0.1uF
16V
10%
X7R
0402
NO STUFF
GND
PS_PEX_FB
PEX_VDD
R252
0ohm
0402
0.05 ohm
COMMON
REMOTE SENSE
R227
14.7k
1 %
0402
COMMON
GND
GND

EN: 3.3V*(10K/27.4K)=1.2V

ENABLE DISCHARGE OF PEX_VDD

0.6V*(1+10K/14.7K)=1.008V

ASSEMBLY	<ASSEMBLY_DESCRIPTION>
PAGE DETAIL	PS: PEXVDD

ALL NVIDIA DESIGN SPECIFICATIONS, REFERENCE SPECIFICATIONS, REFERENCE BOARDS, FILES, DRAWINGS, DIAGNOSTICS, LISTS AND OTHER DOCUMENTS OR INFORMATION (TOGETHER AND SEPARATELY, 'MATERIALS') ARE BEING PROVIDED 'AS IS'. THE MATERIALS MAY CONTAIN KNOWN AND UNKNOWN VIOLATIONS OR DEVIATIONS OF INDUSTRY STANDARDS AND SPECIFICATIONS. NVIDIA MAKES NO WARRANTIES, EXPRESSED, IMPLIED, STATUTORY OR OTHERWISE WITH RESPECT TO THE MATERIALS OR OTHERWISE, AND EXPRESSLY DISCLAIMS ALL IMPLIED WARRANTIES INCLUDING, WITHOUT LIMITATION, THE WARRANTIES OF DESIGN, OF NONINFRINGEMENT, MERCHANTABILITY OR FITNESS FOR A PARTICULAR PURPOSE, OR ARISING FROM A COURSE OF DEALING, USAGE, TRADE USAGE, TRADE PRACTICE, OR INDUSTRY STANDARDS.

RD Center
Colorful Co.,Ltd
深圳市七彩虹科技发展有限公司

Size	Document Number	Rev
Custom	PG161H6-E10	A

Date: Friday, November 09, 2018 Sheet 29 of 53

Page30: PS: FBVDDQ

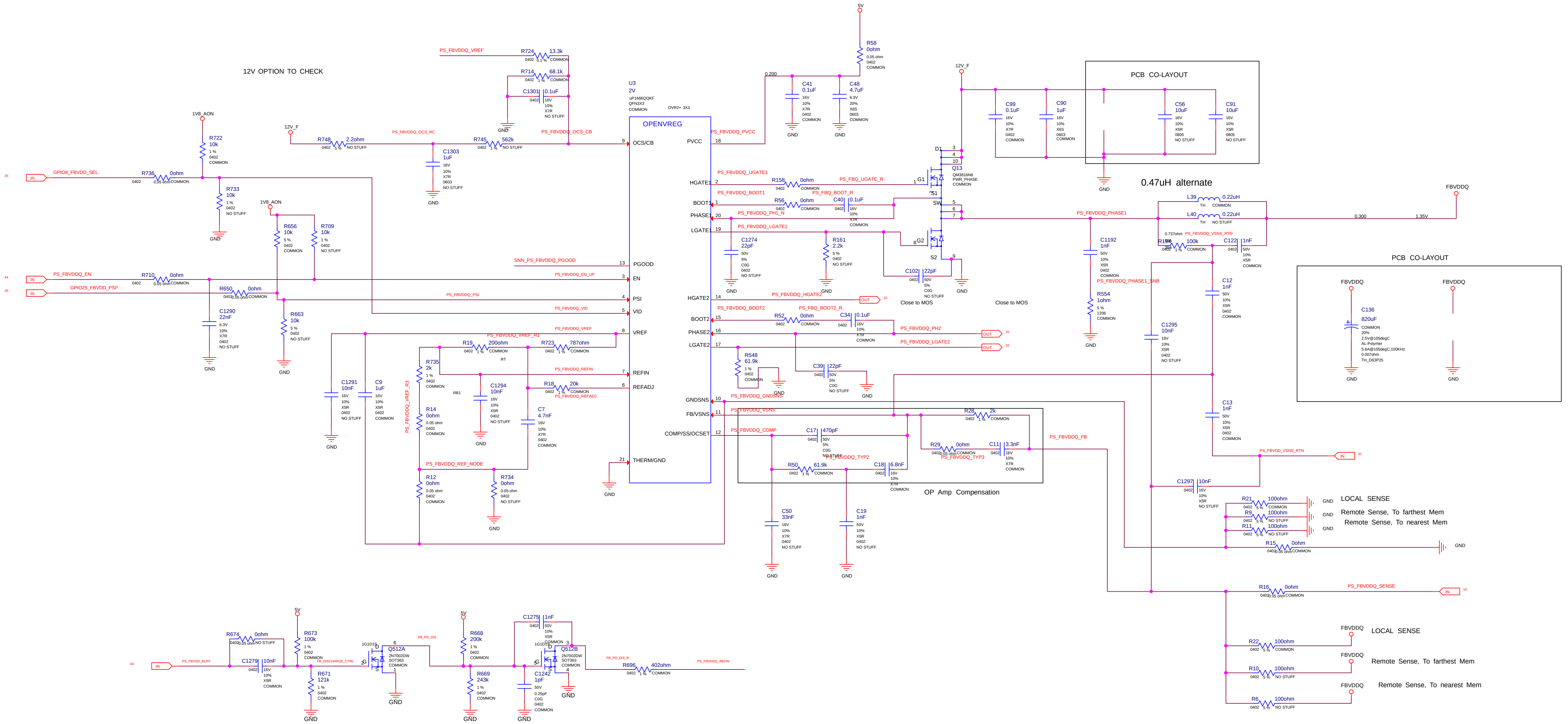
12V OPTION TO CHECK
U3
2V
uP1666QQKF
QFN3X3
COMMON
OVR2+ 3X3
OPENVREG
OCS/CB
PVCC
HGATE1
BOOT1
PHASE1
LGATE1
PGOOD
EN
PSI
VID
VREF
REFIN
REFADJ
HGATE2
BOOT2
PHASE2
LGATE2
GNDSNS
FB/VSNS
COMP/SS/OCSET
THERM/GND
GPIO8_FBVDD_SEL
PS_FBVDDQ_EN
GPIO25_FBVDD_PSI*
PS_FBVDDQ_VREF
PS_FBVDDQ_OCS_RC
PS_FBVDDQ_OCS_CB
PS_FBVDDQ_PVCC
PS_FBVDDQ_UGATE1
PS_FBVDDQ_BOOT1
PS_FBQ_UGATE_R
PS_FBQ_BOOT_R
PS_FBVDDQ_PH1_N
PS_FBVDDQ_LGATE1
PS_FBVDDQ_PHASE1
PS_FBVDDQ_PHASE1_SNB
PS_FBVDDQ_HGATE2
PS_FBVDDQ_BOOT2
PS_FBQ_BOOT2_R
PS_FBVDDQ_PH2
PS_FBVDDQ_LGATE2
PS_FBVDDQ_GNDSNS
PS_FBVDDQ_VSNS
PS_FBVDDQ_COMP
PS_FBVDDQ_TYP2
PS_FBVDDQ_TYP3
PS_FBVDDQ_FB
PS_FBVDD_VSNS_RTN
PS_FBVDDQ_SENSE
PS_FBVDDQ_VREF_R1
PS_FBVDDQ_REFIN
PS_FBVDDQ_REFADJ
PS_FBVDDQ_REF_NODE
PS_FBVDDQ_VREF_R3
PS_FBVDDQ_EN_UP
PS_FBVDDQ_PSI
PS_FBVDDQ_VID
SNN_PS_FBVDDQ_PGOOD
PS_FBVDD_BUFF
FB_DISCHARGE_CTRL
FB_PD_DIS
FB_PD_DIS_R
PS_FBVDDQ_REFIN
R724 13.3k
R714 68.1k
C1301 0.1uF
R722 10k
R736 0ohm
R733 10k
R748 2.2ohm
R745 562k
C1303 1uF
R656 10k
R709 10k
R710 0ohm
R650 0ohm
C1290 22nF
R663 10k
C1291 10nF
C9 1uF
R19 200ohm
R723 787ohm
R735 2k
R14 0ohm
C1294 10nF
C7 4.7nF
R18 20k
R12 0ohm
R734 0ohm
R58 0ohm
C41 0.1uF
C48 4.7uF
C99 0.1uF
C90 1uF
C56 10uF
C91 10uF
PCB CO-LAYOUT
Q13
QM3816N6
PWR_PHASE
D1
G1
S1
SW
G2
S2
R158 0ohm
R56 0ohm
C40 0.1uF
C1274 22pF
R161 2.2k
C102 22pF
Close to MOS
R52 0ohm
C34 0.1uF
R548 61.9k
C39 22pF
0.47uH alternate
L39 0.22uH
L40 0.22uH
FBVDDQ
0.300
1.35V
R19 100k
C122 1nF
C1192 1nF
R554 1ohm
C12 1nF
C1295 10nF
C13 1nF
R28 2k
R29 0ohm
C11 3.3nF
C17 470pF
R50 61.9k
C18 6.8nF
OP Amp Compensation
C50 33nF
C19 1nF
C136 820uF
C1297 10nF
R21 100ohm
R9 100ohm
R11 100ohm
R15 0ohm
LOCAL SENSE
Remote Sense, To farthest Mem
Remote Sense, To nearest Mem
R16 0ohm
R22 100ohm
R10 100ohm
R6 100ohm
R674 0ohm
C1279 10nF
R673 100k
R671 121k
Q512A
2N7002DW
SOT363
R668 200k
R669 243k
C1275 1nF
C1242 1pF
Q512B
R696 402ohm
5V
12V_F
1V8_AON
GND
IN
OUT

ALL NVIDIA DESIGN SPECIFICATIONS, REFERENCE SPECIFICATIONS, REFERENCE BOARDS, FILES, DRAWINGS, DIAGNOSTICS, LISTS AND OTHER DOCUMENTS OR INFORMATION (TOGETHER AND SEPARATELY, 'MATERIALS') ARE BEING PROVIDED 'AS IS'. THE MATERIALS MAY CONTAIN KNOWN AND UNKNOWN VIOLATIONS OR DEVIATIONS OF INDUSTRY STANDARDS AND SPECIFICATIONS. NVIDIA MAKES NO WARRANTIES, EXPRESS, IMPLIED, STATUTORY OR OTHERWISE WITH RESPECT TO THE MATERIALS OR OTHERWISE, AND EXPRESSLY DISCLAIMS ALL IMPLIED WARRANTIES INCLUDING, WITHOUT LIMITATION, THE WARRANTIES OF DESIGN, OF NONINFRINGEMENT, MERCHANTABILITY OR THE WARRANTIES OF FITNESS FOR A PARTICULAR PURPOSE, OR ARISING FROM A COURSE OF DEALING, TRADE USAGE, TRADE PRACTICE, OR INDUSTRY STANDARDS.

ASSEMBLY	<ASSEMBLY_DESCRIPTION>
PAGE DETAIL	PS: FBVDDQ

RD Center
Colorful Co.,Ltd
深圳市七彩虹科技发展有限公司

Size	Document Number	Rev
Custom	PG161H6-E10	A

Date: Wednesday, October 31, 2018 Sheet 30 of 53

Page31: PS: FBVDDQ PH2

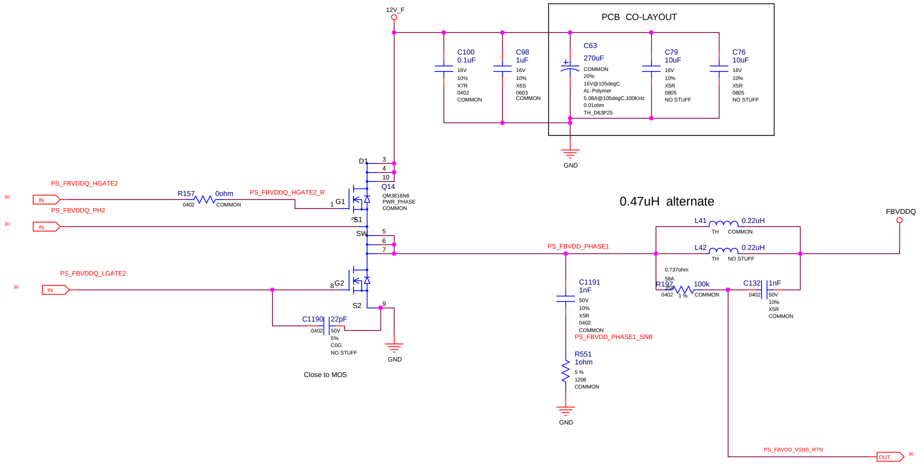
12V_F
PCB CO-LAYOUT
C100
0.1uF
16V
10%
X7R
0402
COMMON
C98
1uF
16V
10%
X6S
0603
COMMON
C63
270uF
COMMON
20%
16V@105degC
AL-Polymer
5.08A@105degC,100KHz
0.01ohm
TH_D63P25
C79
10uF
16V
10%
X5R
0805
NO STUFF
C76
10uF
16V
10%
X5R
0805
NO STUFF
GND
D1
3
4
10
Q14
QM3816N6
PWR_PHASE
COMMON
PS_FBVDDQ_HGATE2
30
IN
R157
0402
0ohm
COMMON
PS_FBVDDQ_HGATE2_R
1
G1
S1
PS_FBVDDQ_PH2
30
IN
SW
5
6
7
PS_FBVDDQ_LGATE2
30
IN
8
G2
S2
9
C1190
0402
22pF
50V
5%
C0G
NO STUFF
GND
Close to MOS
0.47uH alternate
L41
0.22uH
TH
COMMON
L42
0.22uH
TH
NO STUFF
FBVDDQ
PS_FBVDD_PHASE1
C1191
1nF
50V
10%
X5R
0402
COMMON
PS_FBVDD_PHASE1_SNB
R551
1ohm
5 %
1206
COMMON
GND
0.737ohm
58A
35A
R197
0402
1 %
100k
COMMON
C132
0402
1nF
50V
10%
X5R
COMMON
PS_FBVDD_VSNS_RTN
OUT
30

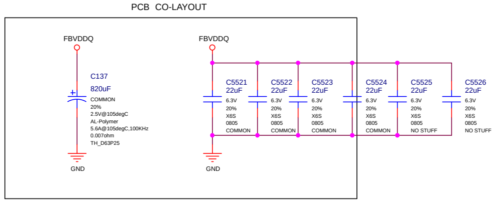
PCB CO-LAYOUT
FBVDDQ
C137
820uF
COMMON
20%
2.5V@105degC
AL-Polymer
5.6A@105degC,100KHz
0.007ohm
TH_D63P25
GND
FBVDDQ
C5521
22uF
6.3V
20%
X6S
0805
COMMON
C5522
22uF
6.3V
20%
X6S
0805
COMMON
C5523
22uF
6.3V
20%
X6S
0805
COMMON
C5524
22uF
6.3V
20%
X6S
0805
COMMON
C5525
22uF
6.3V
20%
X6S
0805
NO STUFF
C5526
22uF
6.3V
20%
X6S
0805
NO STUFF
GND

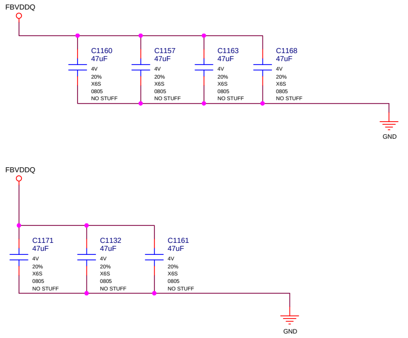
FBVDDQ
C1160
47uF
4V
20%
X6S
0805
NO STUFF
C1157
47uF
4V
20%
X6S
0805
NO STUFF
C1163
47uF
4V
20%
X6S
0805
NO STUFF
C1168
47uF
4V
20%
X6S
0805
NO STUFF
GND
FBVDDQ
C1171
47uF
4V
20%
X6S
0805
NO STUFF
C1132
47uF
4V
20%
X6S
0805
NO STUFF
C1161
47uF
4V
20%
X6S
0805
NO STUFF
GND

ASSEMBLY	<ASSEMBLY_DESCRIPTION>
PAGE DETAIL	PS: FBVDDQ PH2

ALL NVIDIA DESIGN SPECIFICATIONS, REFERENCE SPECIFICATIONS, REFERENCE BOARDS, FILES, DRAWINGS, DIAGNOSTICS, LISTS AND OTHER DOCUMENTS OR INFORMATION (TOGETHER AND SEPARATELY, 'MATERIALS') ARE BEING PROVIDED 'AS IS'. THE MATERIALS MAY CONTAIN KNOWN AND UNKNOWN VIOLATIONS OR DEVIATIONS OF INDUSTRY STANDARDS AND SPECIFICATIONS. NVIDIA MAKES NO WARRANTIES, EXPRESSED, IMPLIED, STATUTORY OR OTHERWISE WITH RESPECT.TO THE MATERIALS OR OTHERWISE, AND EXPRESSLY DISCLAIMS ALL IMPLIED WARRANTIES INCLUDING, WITHOUT LIMITATION, THE WARRANTIES OF DESIGN, OF NONINFRINGEMENT, MERCHANTABILITY OR FITNESS FOR A PARTICULAR PURPOSE, OR ARISING FROM A COURSE OF DEALING, TRADE USAGE, TRADE PRACTICE, OR INDUSTRY STANDARDS.

RD Center
Colorful Co.,Ltd
深圳市七彩虹科技发展有限公司

Size	Document Number	Rev
Custom	PG161H6-E10	A

Date: Wednesday, October 31, 2018 Sheet 31 of 53

Page32: PS: NVVDD CTR

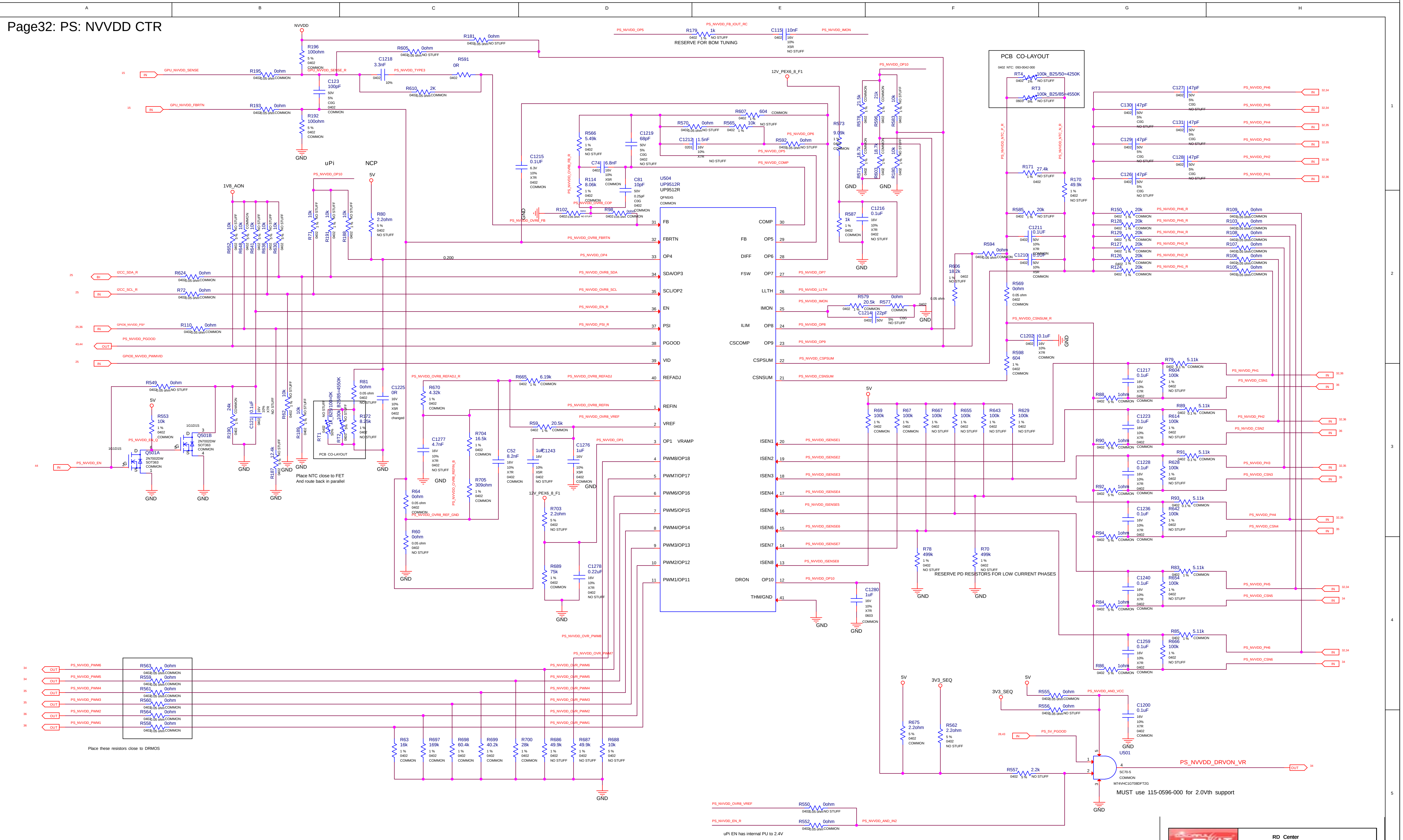
RESERVE FOR BOM TUNING

Place NTC close to FET
And route back in parallel

Place these resistors close to DRMOS

RESERVE PD RESISTORS FOR LOW CURRENT PHASES

MUST use 115-0596-000 for 2.0Vth support

uPi EN has internal PU to 2.4V

A
B
C
D
E
F
G
H
1
2
3
4
5
NVVDD
R196 100ohm 5 % 0402 COMMON
R181 0ohm 0402 0.05 ohm NO STUFF
R605 0ohm 0402 0.05 ohm NO STUFF
GPU_NVVDD_SENSE
R195 0ohm 0402 0.05 ohm COMMON
GPU_NVVDD_SENSE_R
C1218 3.3nF 0402 10%
PS_NVVDD_TYPE3
R591 0R 0402
C123 100pF 50V 5% C0G 0402 COMMON
R610 2K 0402 0.05 ohm COMMON
GPU_NVVDD_FBRTN
R193 0ohm 0402 0.05 ohm COMMON
R192 100ohm 5 % 0402 COMMON
GND
uPi
NCP
PS_NVVDD_OP10
5V
1V8_AON
R652 10k
R648 10k
R641 10k
R636 10k
R630 10k
R71 10k
R191 10k
R188 10k
R80 2.2ohm 5 % 0402 NO STUFF
0.200
I2CC_SDA_R
R624 0ohm 0402 0.05 ohm COMMON
I2CC_SCL_R
R72 0ohm 0402 0.05 ohm COMMON
GPIO6_NVVDD_PSI*
R110 0ohm 0402 0.05 ohm COMMON
PS_NVVDD_PGOOD
GPIO0_NVVDD_PWMVID
R549 0ohm 0402 0.05 ohm NO STUFF
R553 10k 1 % 0402 COMMON
PS_NVVDD_EN_Q
Q501A 2N7002DW SOT363 COMMON
Q501B 2N7002DW SOT363 COMMON
1G1D1S
PS_NVVDD_EN
R190 24k 1 % 0402 COMMON
C121 0.1uF 16V 10% X7R 0402 NO STUFF
R187 12.4k 5 % 0402 NO STUFF
R62 10k 1 % 0402 NO STUFF
R189 10k 1 % 0402 NO STUFF
RT1 1k_B25/100=0K 0402 50% NO STUFF
RT2 100k_B25/85=4550K 0603 5% NO STUFF
R81 0ohm 0.05 ohm 0402 NO STUFF
R172 8.25k 1 % 0402 NO STUFF
C1225 0R 16V 10% X5R 0402 changed
PCB CO-LAYOUT
PS_NVVDD_OVR8_REFADJ_R
R670 4.32k 1 % 0402 COMMON
C1277 4.7nF 16V 10% X7R 0402 NO STUFF
R704 16.5k 1 % 0402 COMMON
R705 309ohm 1 % 0402 COMMON
PS_NVVDD_OVR8_REFIN_B
R64 0ohm 0.05 ohm 0402 COMMON
PS_NVVDD_OVR8_REF_GND
R60 0ohm 0.05 ohm 0402 NO STUFF
C52 8.2nF 16V 10% X7R 0402 COMMON
C1243 1uF 16V 10% X5R 0402 NO STUFF
C1276 1uF 16V 10% X5R 0402 COMMON
12V_PEX6_8_F1
R703 2.2ohm 5 % 0402 NO STUFF
R689 75k 1 % 0402 COMMON
C1278 0.22uF 16V 10% X7R 0402 NO STUFF
R665 6.19k 0402 1 % COMMON
R59 20.5k 0402 1 % COMMON
C1215 0.1UF 6.3V 10% X7R 0402 COMMON
R566 5.49k 1 % 0402 NO STUFF
C74 6.8nF 0402 16V 10% X5R COMMON
R114 8.06k 1 % 0402 COMMON
C1219 68pF 50V 5% C0G 0402 NO STUFF
C81 10pF 50V 0.25pF C0G 0402 COMMON
PS_NVVDD_OVR8_FB_R
PS_NVVDD_OVR8_COP
R102 0ohm 0402 0.05 ohm NO STUFF
R98 0ohm 0402 0.05 ohm COMMON
PS_NVVDD_OVR8_FB
R607 604 0402 1 % COMMON
R570 0ohm 0402 0.05 ohm NO STUFF
R565 10k 0402 1 % NO STUFF
C1212 1.5nF 0201 16V 10% X7R NO STUFF
R592 0ohm 0402 0.05 ohm NO STUFF
PS_NVVDD_OP6
PS_NVVDD_OP5
PS_NVVDD_COMP
U504 UP9512R UP9512R QFN5X5 COMMON
31 FB
32 FBRTN
33 OP4
34 SDA/OP3
35 SCL/OP2
36 EN
37 PSI
38 PGOOD
39 VID
40 REFADJ
1 REFIN
2 VREF
3 OP1 VRAMP
4 PWM8/OP18
5 PWM7/OP17
6 PWM6/OP16
7 PWM5/OP15
8 PWM4/OP14
9 PWM3/OP13
10 PWM2/OP12
11 PWM1/OP11
COMP 30
FB OP5 29
DIFF OP6 28
FSW OP7 27
LLTH 26
IMON 25
ILIM OP8 24
CSCOMP OP9 23
CSPSUM 22
CSNSUM 21
ISEN1 20
ISEN2 19
ISEN3 18
ISEN4 17
ISEN5 16
ISEN6 15
ISEN7 14
ISEN8 13
DRON OP10 12
THM/GND 41
PS_NVVDD_OVR8_FBRTN
PS_NVVDD_OP4
PS_NVVDD_OVR8_SDA
PS_NVVDD_OVR8_SCL
PS_NVVDD_EN_R
PS_NVVDD_PSI_R
PS_NVVDD_OVR8_REFADJ
PS_NVVDD_OVR8_REFIN
PS_NVVDD_OVR8_VREF
PS_NVVDD_OP1
PS_NVVDD_OP7
PS_NVVDD_LLTH
PS_NVVDD_IMON
PS_NVVDD_OP8
PS_NVVDD_OP9
PS_NVVDD_CSPSUM
PS_NVVDD_CSNSUM
PS_NVVDD_ISENSE1
PS_NVVDD_ISENSE2
PS_NVVDD_ISENSE3
PS_NVVDD_ISENSE4
PS_NVVDD_ISENSE5
PS_NVVDD_ISENSE6
PS_NVVDD_ISENSE7
PS_NVVDD_ISENSE8
PS_NVVDD_OP10
PS_NVVDD_OP5
R179 1k 0402 1 % NO STUFF
PS_NVVDD_FB_IOUT_RC
C115 10nF 0402 16V 10% X5R NO STUFF
PS_NVVDD_IMON
R573 9.09k 1 % 0402 COMMON
R578 21.5k 1 % 0402 COMMON
R596 21k 1 % 0402 COMMON
R583 10k 1 % 0402 NO STUFF
R571 18.7k 1 % 0402 COMMON
R603 18.7k 1 % 0402 COMMON
R180 10k 1 % 0402 NO STUFF
R587 1k 1 % 0402 COMMON
C1216 0.1uF 16V 10% X7R 0402 NO STUFF
R579 20.5k 0402 1 % COMMON
R577 0ohm COMMON
C1214 22pF 0402 50V 5% C0G NO STUFF
R606 18.2k 1 % 0402 NO STUFF
C1280 1uF 16V 10% X7R 0603 COMMON
PCB CO-LAYOUT
0402 NTC: 093-0042-000
RT4 100k_B25/50=4250K 0402 1% NO STUFF
RT3 100k_B25/85=4550K 0603 5% NO STUFF
PS_NVVDD_NTC_P_R
PS_NVVDD_NTC_N_R
R171 27.4k 1 % 0402 NO STUFF
R170 49.9k 1 % 0402 NO STUFF
R585 20k 0402 1 % NO STUFF
C1211 0.1UF 0402 50V 10% X7R COMMON
R594 0ohm 0402 0.05 ohm COMMON
C1210 0.1UF 0402 50V 10% X5R COMMON
R569 0ohm 0.05 ohm 0402 COMMON
PS_NVVDD_CSNSUM_R
C1202 0.1uF 0402 16V 10% X7R COMMON
R598 604 1 % 0402 COMMON
C127 47pF 0402 50V 5% C0G NO STUFF
C130 47pF 0402 50V 5% C0G NO STUFF
C131 47pF 0402 50V 5% C0G NO STUFF
C129 47pF 0402 50V 5% C0G NO STUFF
C128 47pF 0402 50V 5% C0G NO STUFF
C126 47pF 0402 50V 5% C0G NO STUFF
PS_NVVDD_PH6
PS_NVVDD_PH5
PS_NVVDD_PH4
PS_NVVDD_PH3
PS_NVVDD_PH2
PS_NVVDD_PH1
R150 20k 0402 1 % COMMON
R128 20k 0402 1 % COMMON
R129 20k 0402 1 % COMMON
R127 20k 0402 1 % COMMON
R126 20k 0402 1 % COMMON
R124 20k 0402 1 % COMMON
PS_NVVDD_PH6_R
PS_NVVDD_PH5_R
PS_NVVDD_PH4_R
PS_NVVDD_PH3_R
PS_NVVDD_PH2_R
PS_NVVDD_PH1_R
R109 0ohm 0402 0.05 ohm COMMON
R103 0ohm 0402 0.05 ohm COMMON
R108 0ohm 0402 0.05 ohm COMMON
R107 0ohm 0402 0.05 ohm COMMON
R106 0ohm 0402 0.05 ohm COMMON
R105 0ohm 0402 0.05 ohm COMMON
R69 100k 1 % 0402 COMMON
R67 100k 1 % 0402 COMMON
R667 100k 1 % 0402 NO STUFF
R655 100k 1 % 0402 NO STUFF
R643 100k 1 % 0402 NO STUFF
R629 100k 1 % 0402 NO STUFF
R78 499k 1 % 0402 NO STUFF
R70 499k 1 % 0402 NO STUFF
R79 5.11k 0402 0.1 % COMMON
C1217 0.1uF 16V 10% X7R 0402 COMMON
R604 100k 1 % 0402 NO STUFF
R88 1ohm 0402 5 % COMMON
PS_NVVDD_CSN1
R89 5.11k 0402 0.1 % COMMON
C1223 0.1uF 16V 10% X7R 0402 COMMON
R614 100k 1 % 0402 NO STUFF
R90 1ohm 0402 5 % COMMON
PS_NVVDD_CSN2
R91 5.11k 0402 0.1 % COMMON
C1228 0.1uF 16V 10% X7R 0402 COMMON
R628 100k 1 % 0402 NO STUFF
R92 1ohm 0402 5 % COMMON
PS_NVVDD_CSN3
R93 5.11k 0402 0.1 % COMMON
C1236 0.1uF 16V 10% X7R 0402 COMMON
R642 100k 1 % 0402 NO STUFF
R94 1ohm 0402 5 % COMMON
PS_NVVDD_CSN4
R83 5.11k 0402 1 % COMMON
C1240 0.1uF 16V 10% X7R 0402 COMMON
R654 100k 1 % 0402 NO STUFF
R84 1ohm 0402 5 % COMMON
PS_NVVDD_CSN5
R85 5.11k 0402 1 % COMMON
C1259 0.1uF 16V 10% X7R 0402 COMMON
R666 100k 1 % 0402 NO STUFF
R86 1ohm 0402 5 % COMMON
PS_NVVDD_CSN6
PS_NVVDD_PWM6
PS_NVVDD_PWM5
PS_NVVDD_PWM4
PS_NVVDD_PWM3
PS_NVVDD_PWM2
PS_NVVDD_PWM1
R563 0ohm 0402 0.05 ohm COMMON
R559 0ohm 0402 0.05 ohm COMMON
R561 0ohm 0402 0.05 ohm COMMON
R560 0ohm 0402 0.05 ohm COMMON
R564 0ohm 0402 0.05 ohm COMMON
R558 0ohm 0402 0.05 ohm COMMON
PS_NVVDD_OVR_PWM8
PS_NVVDD_OVR_PWM7
PS_NVVDD_OVR_PWM6
PS_NVVDD_OVR_PWM5
PS_NVVDD_OVR_PWM4
PS_NVVDD_OVR_PWM3
PS_NVVDD_OVR_PWM2
PS_NVVDD_OVR_PWM1
R63 16k 1 % 0402 COMMON
R697 169k 1 % 0402 COMMON
R698 60.4k 1 % 0402 COMMON
R699 40.2k 1 % 0402 COMMON
R700 28k 1 % 0402 COMMON
R686 49.9k 1 % 0402 NO STUFF
R687 49.9k 1 % 0402 NO STUFF
R688 10k 5 % 0402 NO STUFF
PS_NVVDD_OVR8_VREF
R550 0ohm 0402 0.05 ohm NO STUFF
PS_NVVDD_EN_R
R552 0ohm 0402 0.05 ohm COMMON
PS_NVVDD_AND_IN2
3V3_SEQ
R675 2.2ohm 5 % 0402 COMMON
R562 2.2ohm 5 % 0402 NO STUFF
R555 0ohm 0402 0.05 ohm COMMON
PS_NVVDD_AND_VCC
R556 0ohm 0402 0.05 ohm NO STUFF
C1200 0.1uF 16V 10% X7R 0402 COMMON
PS_5V_PGOOD
R557 2.2k 0402 5 % NO STUFF
U501 SC70-5 COMMON M74VHC1GT08DFT2G
PS_NVVDD_DRVON_VR
IN
OUT
BI

ALL NVIDIA DESIGN SPECIFICATIONS, REFERENCE SPECIFICATIONS, REFERENCE BOARDS, FILES, DRAWINGS, DIAGNOSTICS, LISTS AND OTHER DOCUMENTS OR INFORMATION (TOGETHER AND SEPARATELY, 'MATERIALS') ARE BEING PROVIDED 'AS IS'. THE MATERIALS MAY CONTAIN KNOWN AND UNKNOWN VIOLATIONS OR DEVIATIONS OF INDUSTRY STANDARDS AND SPECIFICATIONS. NVIDIA MAKES NO WARRANTIES, EXPRESSED, IMPLIED, STATUTORY OR OTHERWISE WITH RESPECT TO THE MATERIALS OR OTHERWISE, AND EXPRESSLY DISCLAIMS ALL IMPLIED WARRANTIES INCLUDING, WITHOUT LIMITATION, THE WARRANTIES OF DESIGN, OF NONINFRINGEMENT, MERCHANTABILITY OR FITNESS FOR A PARTICULAR PURPOSE, OR ARISING FROM A COURSE OF DEALING, TRADE USAGE, TRADE PRACTICE, OR INDUSTRY STANDARDS.

ASSEMBLY	<ASSEMBLY_DESCRIPTION>
PAGE DETAIL	PS: NVVDD Controller

RD Center
Colorful Co.,Ltd
深圳市七彩虹科技发展有限公司

Size	Document Number	Rev
Custom	PG161H6-E10	A
Date: Friday, November 09, 2018	Sheet 32 of 53	

Page33: PS: NVVDD CTR OVR3i

DROP OVR3i SOLUTION

ASSEMBLY	<ASSEMBLY_DESCRIPTION>
PAGE DETAIL	PS: NVVDD Controller OVR3i

ALL NVIDIA DESIGN SPECIFICATIONS, REFERENCE SPECIFICATIONS, REFERENCE BOARDS, FILES, DRAWINGS, DIAGNOSTICS, LISTS AND OTHER DOCUMENTS OR INFORMATION (TOGETHER AND SEPARATELY, 'MATERIALS') ARE BEING PROVIDED 'AS IS'. THE MATERIALS MAY CONTAIN KNOWN AND UNKNOWN VIOLATIONS OR DEVIATIONS OF INDUSTRY STANDARDS AND SPECIFICATIONS. NVIDIA MAKES NO WARRANTIES, EXPRESSED, IMPLIED, STATUTORY OR OTHERWISE WITH RESPECT TO THE MATERIALS OR OTHERWISE, AND EXPRESSLY DISCLAIMS ALL IMPLIED WARRANTIES INCLUDING, WITHOUT LIMITATION, THE WARRANTIES OF DESIGN, OF NONINFRINGEMENT, MERCHANTABILITY OR FITNESS FOR A PARTICULAR PURPOSE, OR ARISING FROM A COURSE OF DEALING, TRADE USAGE, TRADE PRACTICE, OR INDUSTRY STANDARDS.

RD Center
Colorful Co.,Ltd
深圳市七彩虹科技发展有限公司

Size	Document Number	Rev
Custom	PG161H6-E10	A

Date: Wednesday, October 31, 2018 Sheet 33 of 53

Page34: PS: NVVDD PH5&6

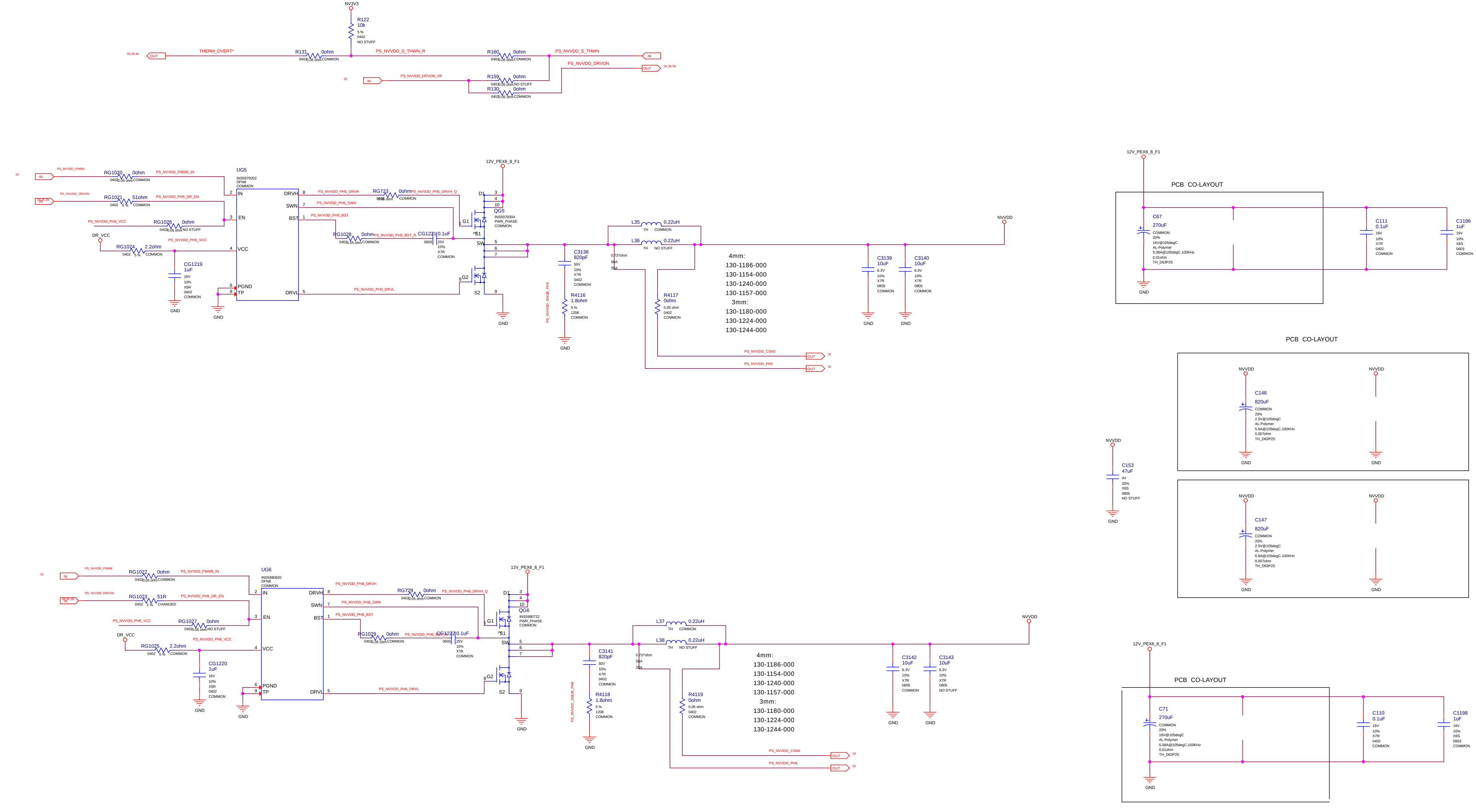
NV3V3
R122
10k
5 %
0402
NO STUFF
25,39,44
OUT
THERM_OVERT*
R131
0ohm
0402 0.05 ohm COMMON
PS_NVVDD_S_THWN_R
R160
0ohm
0402 0.05 ohm COMMON
PS_NVVDD_S_THWN
IN
PS_NVVDD_DRVON
OUT
34,35,36
32
IN
PS_NVVDD_DRVON_VR
R159
0ohm
0402 0.05 ohm NO STUFF
R130
0ohm
0402 0.05 ohm COMMON
32
IN
PS_NVVDD_PWM5
RG1020
0ohm
0402 0.05 ohm COMMON
PS_NVVDD_PWM5_IN
34,35,36
IN
PS_NVVDD_DRVON
RG1021
51ohm
0402 5 % COMMON
PS_NVVDD_PH5_DR_EN
PS_NVVDD_PH5_VCC
RG1026
0ohm
0402 0.05 ohm NO STUFF
DR_VCC
RG1024
2.2ohm
0402 5 % COMMON
PS_NVVDD_PH5_VCC
CG1219
1uF
16V
10%
X5R
0402
COMMON
GND
UG5
INS5979202
DFN8
COMMON
IN
EN
VCC
PGND
TP
DRVH
SWN
BST
DRVL
GND
PS_NVVDD_PH5_DRVH
RG723
0ohm
0402 0.05 ohm COMMON
PS_NVVDD_PH5_DRVH_Q
PS_NVVDD_PH5_SWN
PS_NVVDD_PH5_BST
RG1028
0ohm
0402 0.05 ohm COMMON
PS_NVVDD_PH5_BST_R
CG1221
0.1uF
0603
25V
10%
X7R
COMMON
PS_NVVDD_PH5_DRVL
12V_PEX6_8_F1
D1
G1
S1
SW
G2
S2
QG5
INS5979304
PWR_PHASE
COMMON
GND
C3138
820pF
50V
10%
X7R
0402
COMMON
PS_NVVDD_SNUB_PH5
R4116
1.8ohm
5 %
1206
COMMON
GND
L35
0.22uH
TH COMMON
L36
0.22uH
TH NO STUFF
0.737ohm
58A
35A
R4117
0ohm
0.05 ohm
0402
COMMON
4mm:
130-1186-000
130-1154-000
130-1240-000
130-1157-000
3mm:
130-1180-000
130-1224-000
130-1244-000
NVVDD
C3139
10uF
6.3V
10%
X7R
0805
COMMON
C3140
10uF
6.3V
10%
X7R
0805
COMMON
GND
GND
PS_NVVDD_CSN5
OUT
32
PS_NVVDD_PH5
OUT
32
12V_PEX6_8_F1
PCB CO-LAYOUT
C67
270uF
COMMON
20%
16V@105degC
AL-Polymer
5.08A@105degC,100KHz
0.01ohm
TH_D63P25
GND
C111
0.1uF
16V
10%
X7R
0402
COMMON
C1196
1uF
16V
10%
X6S
0603
COMMON
PCB CO-LAYOUT
NVVDD
C146
820uF
COMMON
20%
2.5V@105degC
AL-Polymer
5.6A@105degC,100KHz
0.007ohm
TH_D63P25
GND
NVVDD
GND
NVVDD
C153
47uF
4V
20%
X6S
0805
NO STUFF
GND
NVVDD
C147
820uF
COMMON
20%
2.5V@105degC
AL-Polymer
5.6A@105degC,100KHz
0.007ohm
TH_D63P25
GND
NVVDD
GND
32
IN
PS_NVVDD_PWM6
RG1022
0ohm
0402 0.05 ohm COMMON
PS_NVVDD_PWM6_IN
34,35,36
IN
PS_NVVDD_DRVON
RG1023
51R
0402 1 % CHANGED
PS_NVVDD_PH6_DR_EN
PS_NVVDD_PH6_VCC
RG1027
0ohm
0402 0.05 ohm NO STUFF
DR_VCC
RG1025
2.2ohm
0402 5 % COMMON
PS_NVVDD_PH6_VCC
CG1220
1uF
16V
10%
X5R
0402
COMMON
GND
UG6
INS5980620
DFN8
COMMON
IN
EN
VCC
PGND
TP
DRVH
SWN
BST
DRVL
GND
PS_NVVDD_PH6_DRVH
RG729
0ohm
0402 0.05 ohm COMMON
PS_NVVDD_PH6_DRVH_Q
PS_NVVDD_PH6_SWN
PS_NVVDD_PH6_BST
RG1029
0ohm
0402 0.05 ohm COMMON
PS_NVVDD_PH6_BST_R
CG1222
0.1uF
0603
25V
10%
X7R
COMMON
PS_NVVDD_PH6_DRVL
12V_PEX6_8_F1
D1
G1
S1
SW
G2
S2
QG6
INS5980722
PWR_PHASE
COMMON
GND
C3141
820pF
50V
10%
X7R
0402
COMMON
PS_NVVDD_SNUB_PH6
R4118
1.8ohm
5 %
1206
COMMON
GND
L37
0.22uH
TH COMMON
L38
0.22uH
TH NO STUFF
0.737ohm
58A
35A
R4119
0ohm
0.05 ohm
0402
COMMON
4mm:
130-1186-000
130-1154-000
130-1240-000
130-1157-000
3mm:
130-1180-000
130-1224-000
130-1244-000
NVVDD
C3142
10uF
6.3V
10%
X7R
0805
COMMON
C3143
10uF
6.3V
10%
X7R
0805
NO STUFF
GND
GND
PS_NVVDD_CSN6
OUT
32
PS_NVVDD_PH6
OUT
32
12V_PEX6_8_F1
PCB CO-LAYOUT
C71
270uF
COMMON
20%
16V@105degC
AL-Polymer
5.08A@105degC,100KHz
0.01ohm
TH_D63P25
GND
C110
0.1uF
16V
10%
X7R
0402
COMMON
C1198
1uF
16V
10%
X6S
0603
COMMON

ASSEMBLY	<ASSEMBLY_DESCRIPTION>
PAGE DETAIL	PS: NVVDD Phase 6,4

ALL NVIDIA DESIGN SPECIFICATIONS, REFERENCE SPECIFICATIONS, REFERENCE BOARDS, FILES, DRAWINGS, DIAGNOSTICS, LISTS AND OTHER DOCUMENTS OR INFORMATION (TOGETHER AND SEPARATELY, 'MATERIALS') ARE BEING PROVIDED 'AS IS'. THE MATERIALS MAY CONTAIN KNOWN AND UNKNOWN VIOLATIONS OR DEVIATIONS OF INDUSTRY STANDARDS AND SPECIFICATIONS. NVIDIA MAKES NO WARRANTIES, EXPRESSED, IMPLIED, STATUTORY OR OTHERWISE WITH RESPECT TO THE MATERIALS OR OTHERWISE, AND EXPRESSLY DISCLAIMS ALL IMPLIED WARRANTIES INCLUDING, WITHOUT LIMITATION, THE WARRANTIES OF DESIGN, OF NONINFRINGEMENT, MERCHANTABILITY OR FITNESS FOR A PARTICULAR PURPOSE, OR ARISING FROM A COURSE OF DEALING, TRADE USAGE, TRADE PRACTICE, OR INDUSTRY STANDARDS.

RD Center
Colorful Co.,Ltd
深圳市七彩虹科技发展有限公司

Size	Document Number	Rev
Custom	PG161H6-E10	A

Date: Thursday, November 08, 2018 Sheet 34 of 53

Page35: PS: NVVDD PH3&4

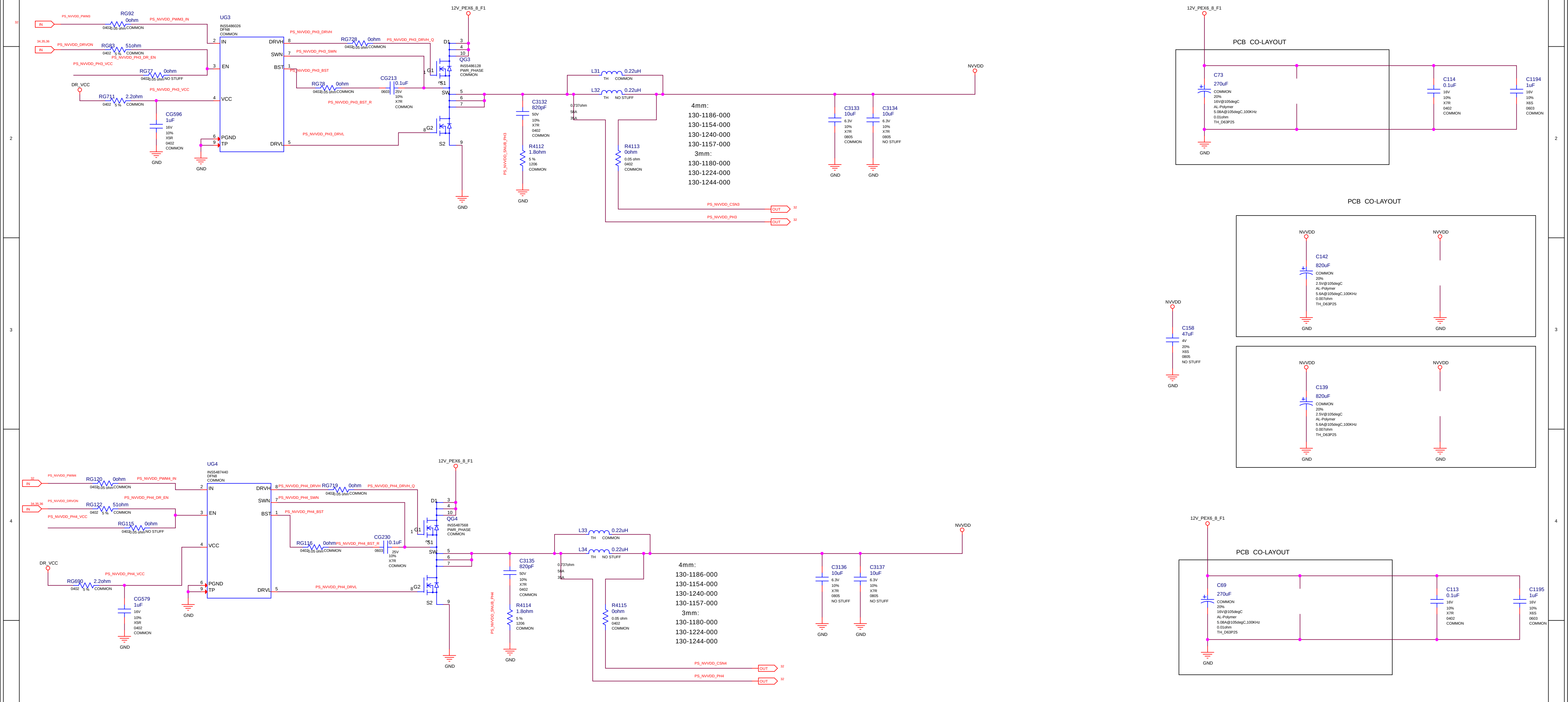
32
IN
PS_NVVDD_PWM3
RG92
0ohm
0402 0.05 ohm COMMON
PS_NVVDD_PWM3_IN
34,35,36
IN
PS_NVVDD_DRVON
RG83
51ohm
0402 5 % COMMON
PS_NVVDD_PH3_DR_EN
PS_NVVDD_PH3_VCC
RG77
0ohm
0402 0.05 ohm NO STUFF
DR_VCC
RG711
2.2ohm
0402 5 % COMMON
PS_NVVDD_PH3_VCC
CG596
1uF
16V
10%
X5R
0402
COMMON
GND
UG3
INS5486026
DFN8
COMMON
2 IN
3 EN
4 VCC
6 PGND
9 TP
DRVH 8
SWN 7
BST 1
DRVL 5
GND
PS_NVVDD_PH3_DRVH
RG728
0ohm
0402 0.05 ohm COMMON
PS_NVVDD_PH3_DRVH_Q
PS_NVVDD_PH3_SWN
PS_NVVDD_PH3_BST
RG78
0ohm
0402 0.05 ohm COMMON
CG213
0.1uF
0603
25V
10%
X7R
COMMON
PS_NVVDD_PH3_BST_R
PS_NVVDD_PH3_DRVL
12V_PEX6_8_F1
D1
3
4
10
QG3
INS5486128
PWR_PHASE
COMMON
1 G1
2 S1
SW
5
6
7
8 G2
S2
9
GND
C3132
820pF
50V
10%
X7R
0402
COMMON
PS_NVVDD_SNUB_PH3
R4112
1.8ohm
5 %
1206
COMMON
GND
L31
0.22uH
TH COMMON
L32
0.22uH
TH NO STUFF
0.737ohm
58A
35A
R4113
0ohm
0.05 ohm
0402
COMMON
4mm:
130-1186-000
130-1154-000
130-1240-000
130-1157-000
3mm:
130-1180-000
130-1224-000
130-1244-000
PS_NVVDD_CSN3
OUT
32
PS_NVVDD_PH3
OUT
32
C3133
10uF
6.3V
10%
X7R
0805
COMMON
GND
C3134
10uF
6.3V
10%
X7R
0805
NO STUFF
GND
NVVDD
12V_PEX6_8_F1
PCB CO-LAYOUT
C73
270uF
COMMON
20%
16V@105degC
AL-Polymer
5.08A@105degC,100KHz
0.01ohm
TH_D63P25
GND
C114
0.1uF
16V
10%
X7R
0402
COMMON
C1194
1uF
16V
10%
X6S
0603
COMMON
PCB CO-LAYOUT
NVVDD
C142
820uF
COMMON
20%
2.5V@105degC
AL-Polymer
5.6A@105degC,100KHz
0.007ohm
TH_D63P25
GND
NVVDD
GND
NVVDD
C158
47uF
4V
20%
X6S
0805
NO STUFF
GND
NVVDD
C139
820uF
COMMON
20%
2.5V@105degC
AL-Polymer
5.6A@105degC,100KHz
0.007ohm
TH_D63P25
GND
NVVDD
GND
32
IN
PS_NVVDD_PWM4
RG120
0ohm
0402 0.05 ohm COMMON
PS_NVVDD_PWM4_IN
34,35,36
IN
PS_NVVDD_DRVON
RG122
51ohm
0402 5 % COMMON
PS_NVVDD_PH4_DR_EN
PS_NVVDD_PH4_VCC
RG115
0ohm
0402 0.05 ohm NO STUFF
DR_VCC
RG690
2.2ohm
0402 5 % COMMON
PS_NVVDD_PH4_VCC
CG579
1uF
16V
10%
X5R
0402
COMMON
GND
UG4
INS5487440
DFN8
COMMON
2 IN
3 EN
4 VCC
6 PGND
9 TP
DRVH 8
SWN 7
BST 1
DRVL 5
GND
PS_NVVDD_PH4_DRVH
RG719
0ohm
0402 0.05 ohm COMMON
PS_NVVDD_PH4_DRVH_Q
PS_NVVDD_PH4_SWN
PS_NVVDD_PH4_BST
RG116
0ohm
0402 0.05 ohm COMMON
PS_NVVDD_PH4_BST_R
CG230
0.1uF
0603
25V
10%
X7R
COMMON
PS_NVVDD_PH4_DRVL
12V_PEX6_8_F1
D1
3
4
10
QG4
INS5487568
PWR_PHASE
COMMON
1 G1
2 S1
SW
5
6
7
8 G2
S2
9
GND
C3135
820pF
50V
10%
X7R
0402
COMMON
PS_NVVDD_SNUB_PH4
R4114
1.8ohm
5 %
1206
COMMON
GND
L33
0.22uH
TH COMMON
L34
0.22uH
TH NO STUFF
0.737ohm
58A
35A
R4115
0ohm
0.05 ohm
0402
COMMON
4mm:
130-1186-000
130-1154-000
130-1240-000
130-1157-000
3mm:
130-1180-000
130-1224-000
130-1244-000
PS_NVVDD_CSN4
OUT
32
PS_NVVDD_PH4
OUT
32
C3136
10uF
6.3V
10%
X7R
0805
NO STUFF
GND
C3137
10uF
6.3V
10%
X7R
0805
NO STUFF
GND
NVVDD
12V_PEX6_8_F1
PCB CO-LAYOUT
C69
270uF
COMMON
20%
16V@105degC
AL-Polymer
5.08A@105degC,100KHz
0.01ohm
TH_D63P25
GND
C113
0.1uF
16V
10%
X7R
0402
COMMON
C1195
1uF
16V
10%
X6S
0603
COMMON

ASSEMBLY	<ASSEMBLY_DESCRIPTION>
PAGE DETAIL	PS: NVVDD Phase 3,5

ALL NVIDIA DESIGN SPECIFICATIONS, REFERENCE SPECIFICATIONS, REFERENCE BOARDS, FILES, DRAWINGS, DIAGNOSTICS, LISTS AND OTHER DOCUMENTS OR INFORMATION (TOGETHER AND SEPARATELY, 'MATERIALS') ARE BEING PROVIDED 'AS IS'. THE MATERIALS MAY CONTAIN KNOWN AND UNKNOWN VIOLATIONS OR DEVIATIONS OF INDUSTRY STANDARDS AND SPECIFICATIONS. NVIDIA MAKES NO WARRANTIES, EXPRESSED, IMPLIED, STATUTORY OR OTHERWISE WITH RESPECT TO THE MATERIALS OR OTHERWISE, AND EXPRESSLY DISCLAIMS ALL IMPLIED WARRANTIES INCLUDING, WITHOUT LIMITATION, THE WARRANTIES OF DESIGN, OF NONINFRINGEMENT, MERCHANTABILITY OR FITNESS FOR A PARTICULAR PURPOSE, OR ARISING FROM A COURSE OF DEALING, TRADE USAGE, TRADE PRACTICE, OR INDUSTRY STANDARDS.

RD Center
Colorful Co.,Ltd
深圳市七彩虹科技 发 展 有限 公 司

Size Custom
Document Number PG161H6-E10
Rev A
Date: Wednesday, October 31, 2018
Sheet 35 of 53

Page36: PS: NVVDD PH2&1

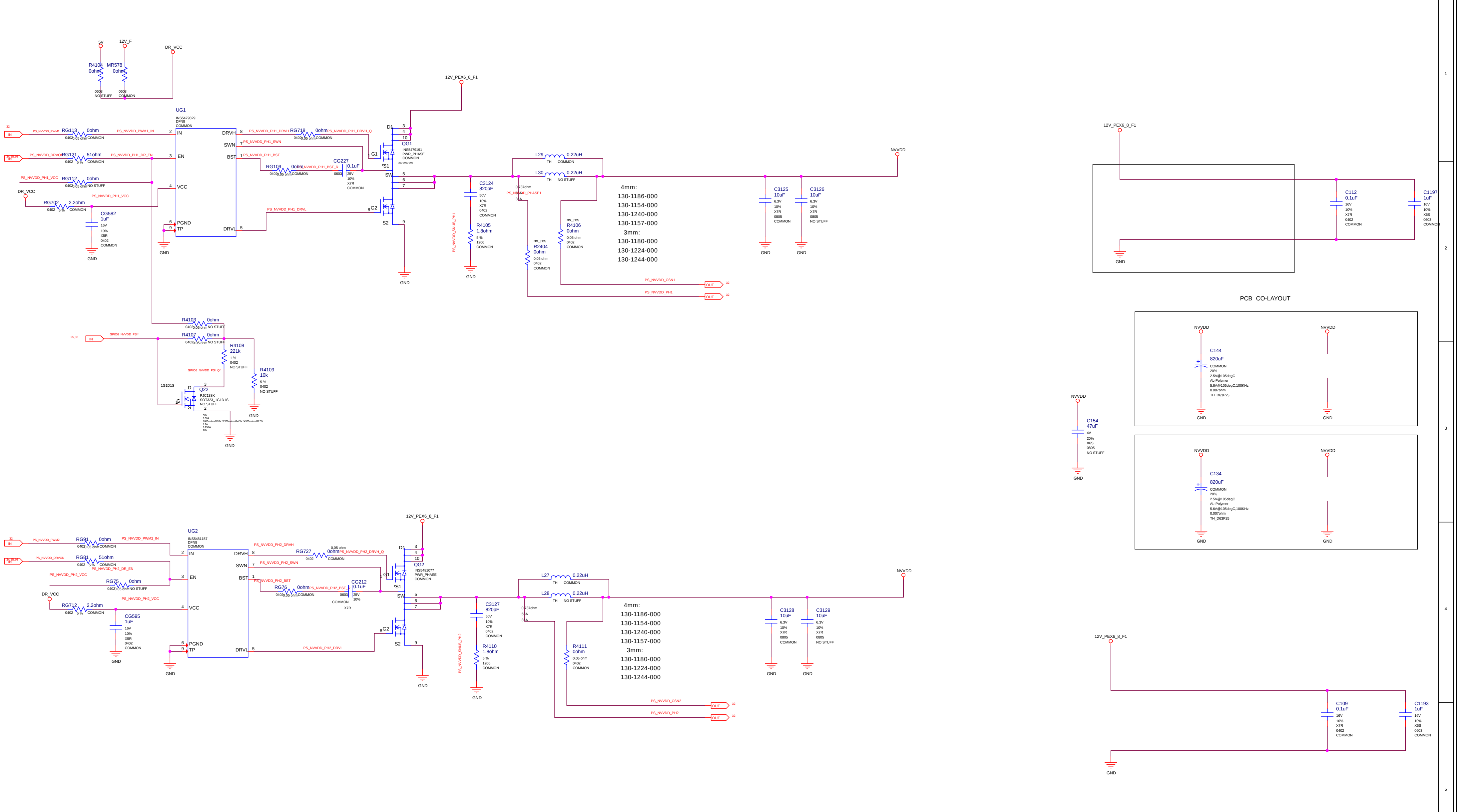
5V
12V_F
DR_VCC
R4104 0ohm 0603 NO STUFF
MR578 0ohm 0603 COMMON
UG1 INS5479329 DFN8 COMMON
IN EN VCC PGND TP DRVH SWN BST DRVL
PS_NVVDD_PWM1
RG113 0ohm
PS_NVVDD_PWM1_IN
PS_NVVDD_DRVON
RG121 51ohm
PS_NVVDD_PH1_DR_EN
PS_NVVDD_PH1_VCC
RG112 0ohm NO STUFF
RG702 2.2ohm
CG582 1uF 16V 10% X5R 0402 COMMON
PS_NVVDD_PH1_DRVH
RG718 0ohm
PS_NVVDD_PH1_DRVH_Q
PS_NVVDD_PH1_SWN
PS_NVVDD_PH1_BST
RG109 0ohm
PS_NVVDD_PH1_BST_R
CG227 0.1uF 25V 10% X7R COMMON
PS_NVVDD_PH1_DRVL
12V_PEX6_8_F1
QG1 INS5479191 PWR_PHASE COMMON
D1 G1 S1 SW G2 S2
L29 0.22uH TH COMMON
L30 0.22uH TH NO STUFF
C3124 820pF 50V 10% X7R 0402 COMMON
R4105 1.8ohm 5% 1206 COMMON
PS_NVVDD_SNUB_PH1
0.737ohm
PS_NVVDD_PHASE1
nv_res R4106 0ohm 0.05 ohm 0402 COMMON
nv_res R2404 0ohm 0.05 ohm 0402 COMMON
4mm:
130-1186-000
130-1154-000
130-1240-000
130-1157-000
3mm:
130-1180-000
130-1224-000
130-1244-000
NVVDD
C3125 10uF 6.3V 10% X7R 0805 COMMON
C3126 10uF 6.3V 10% X7R 0805 NO STUFF
PS_NVVDD_CSN1
PS_NVVDD_PH1
OUT
GND
R4103 0ohm NO STUFF
R4107 0ohm NO STUFF
GPIO6_NVVDD_PS4
R4108 221k 1% 0402 NO STUFF
R4109 10k 5% 0402 NO STUFF
GPIO6_NVVDD_PS_Q
1G1D1S
Q22 PJC138K SOT323_1G1D1S NO STUFF
12V_PEX6_8_F1
C112 0.1uF 16V 10% X7R 0402 COMMON
C1197 1uF 16V 10% X6S 0603 COMMON
PCB CO-LAYOUT
C144 820uF COMMON 20% 2.5V@105degC AL-Polymer 5.6A@105degC,100KHz 0.007ohm TH_D63P25
C134 820uF COMMON 20% 2.5V@105degC AL-Polymer 5.6A@105degC,100KHz 0.007ohm TH_D63P25
C154 47uF 4V 20% X6S 0805 NO STUFF
UG2 INS5481157 DFN8 COMMON
PS_NVVDD_PWM2
RG81 0ohm
PS_NVVDD_PWM2_IN
RG81 51ohm
PS_NVVDD_PH2_DR_EN
PS_NVVDD_PH2_VCC
RG75 0ohm NO STUFF
RG712 2.2ohm
CG595 1uF 16V 10% X5R 0402 COMMON
PS_NVVDD_PH2_DRVH
RG727 0ohm 0.05 ohm
PS_NVVDD_PH2_DRVH_Q
PS_NVVDD_PH2_SWN
PS_NVVDD_PH2_BST
RG76 0ohm
PS_NVVDD_PH2_BST_R
CG212 0.1uF 25V 10% X7R COMMON
PS_NVVDD_PH2_DRVL
QG2 INS5481077 PWR_PHASE COMMON
L27 0.22uH TH COMMON
L28 0.22uH TH NO STUFF
C3127 820pF 50V 10% X7R 0402 COMMON
R4110 1.8ohm 5% 1206 COMMON
PS_NVVDD_SNUB_PH2
R4111 0ohm 0.05 ohm 0402 COMMON
C3128 10uF 6.3V 10% X7R 0805 COMMON
C3129 10uF 6.3V 10% X7R 0805 NO STUFF
PS_NVVDD_CSN2
PS_NVVDD_PH2
C109 0.1uF 16V 10% X7R 0402 COMMON
C1193 1uF 16V 10% X6S 0603 COMMON

ASSEMBLY	<ASSEMBLY_DESCRIPTION>
PAGE DETAIL	PS: NVVDD Phase 2,1

ALL NVIDIA DESIGN SPECIFICATIONS, REFERENCE SPECIFICATIONS, REFERENCE BOARDS, FILES, DRAWINGS, DIAGNOSTICS, LISTS AND OTHER DOCUMENTS OR INFORMATION (TOGETHER AND SEPARATELY, 'MATERIALS') ARE BEING PROVIDED 'AS IS'. THE MATERIALS MAY CONTAIN KNOWN AND UNKNOWN VIOLATIONS OR DEVIATIONS OF INDUSTRY STANDARDS AND SPECIFICATIONS. NVIDIA MAKES NO WARRANTIES, EXPRESSED, IMPLIED, STATUTORY OR OTHERWISE WITH RESPECT TO THE MATERIALS OR OTHERWISE, AND EXPRESSLY DISCLAIMS ALL IMPLIED WARRANTIES INCLUDING, WITHOUT LIMITATION, THE WARRANTIES OF DESIGN, OF NONINFRINGEMENT, MERCHANTABILITY OR FITNESS FOR A PARTICULAR PURPOSE, OR ARISING FROM A COURSE OF DEALING, TRADE USAGE, TRADE PRACTICE, OR ARISING FROM ANY CONTRACT.

RD Center
Colorful Co.,Ltd
深圳市七彩虹科技 发 展 有限 公 司

Size	Document Number	Rev
Custom	PG161H6-E10	A

Date: Wednesday, October 31, 2018 Sheet 36 of 53

Page37: Input Power Balancing Switcher

DELETE RAIL BALANCE CIRCUIT

ASSEMBLY	<ASSEMBLY_DESCRIPTION>
PAGE DETAIL	PS: Input Power Balancing Switcher

ALL NVIDIA DESIGN SPECIFICATIONS, REFERENCE SPECIFICATIONS, REFERENCE BOARDS, FILES, DRAWINGS, DIAGNOSTICS, LISTS AND OTHER DOCUMENTS OR INFORMATION (TOGETHER AND SEPARATELY, 'MATERIALS') ARE BEING PROVIDED 'AS IS'. THE MATERIALS MAY CONTAIN KNOWN AND UNKNOWN VIOLATIONS OR DEVIATIONS OF INDUSTRY STANDARDS AND SPECIFICATIONS. NVIDIA MAKES NO WARRANTIES, EXPRESSED, IMPLIED, STATUTORY OR OTHERWISE WITH RESPECT TO THE MATERIALS OR OTHERWISE, AND EXPRESSLY DISCLAIMS ALL IMPLIED WARRANTIES INCLUDING, WITHOUT LIMITATION, THE WARRANTIES OF DESIGN, OF NONINFRINGEMENT, MERCHANTABILITY OR FITNESS FOR A PARTICULAR PURPOSE, OR ARISING FROM A COURSE OF DEALING, TRADE USAGE, TRADE PRACTICE, OR INDUSTRY STANDARDS.

RD Center
Colorful Co.,Ltd
深圳市七彩虹科技发展有限公司

Size	Document Number	Rev
Custom	PG161H6-E10	A

Date: Wednesday, October 31, 2018 Sheet 37 of 53

Page38: PS: Inputs, Filtering, and Monitoring

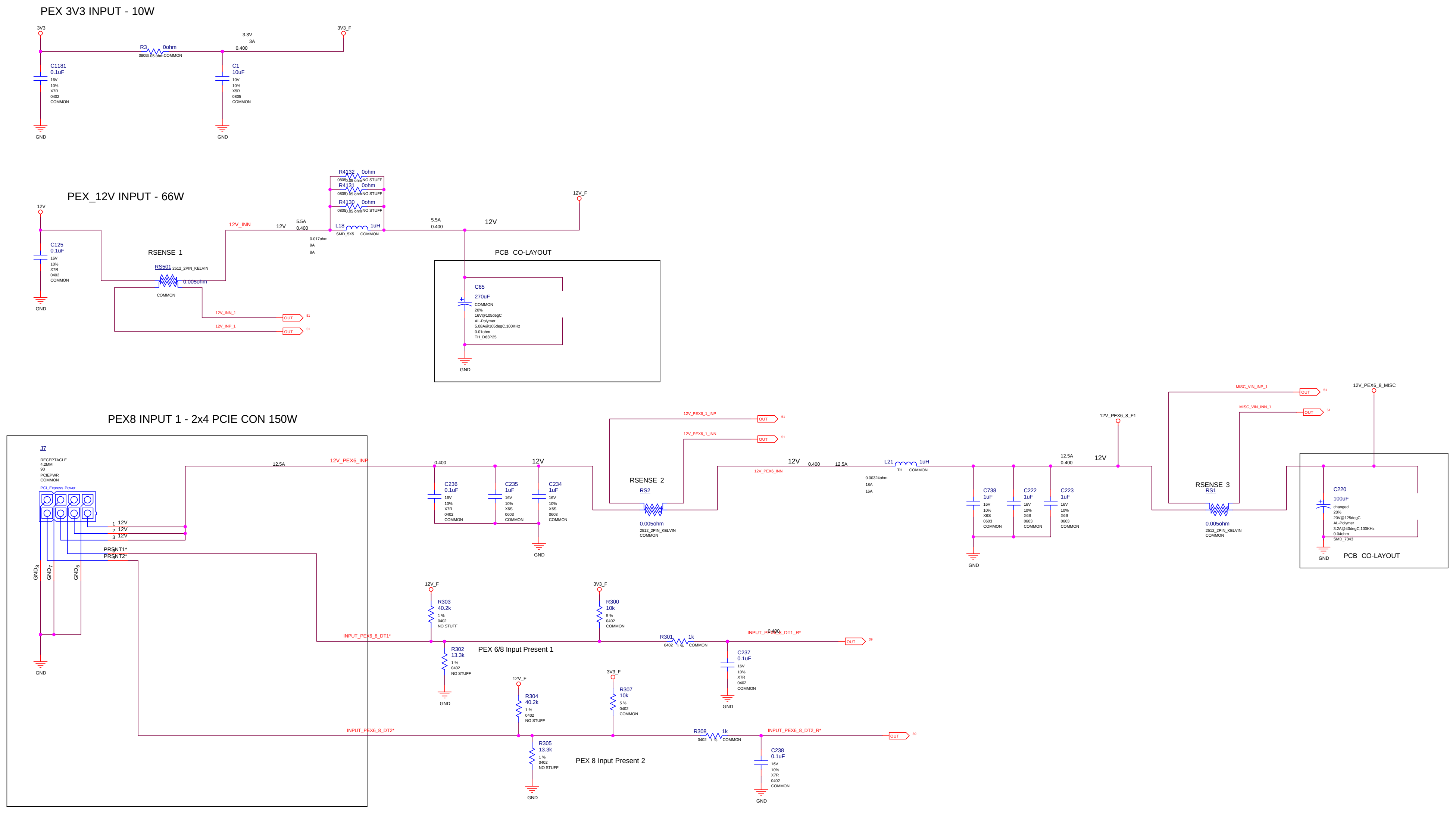

PEX 3V3 INPUT - 10W
3V3
R3 0ohm
0805 0.05 ohm COMMON
3.3V
3A
0.400
3V3_F
C1181
0.1uF
16V
10%
X7R
0402
COMMON
C1
10uF
10V
10%
X5R
0805
COMMON
GND
GND
PEX_12V INPUT - 66W
12V
C125
0.1uF
16V
10%
X7R
0402
COMMON
GND
RSENSE 1
RS501 2512_2PIN_KELVIN
0.005ohm
COMMON
12V_INN
12V
5.5A
0.400
0.017ohm
9A
8A
R4132 0ohm
0805 0.05 ohm NO STUFF
R4131 0ohm
0805 0.05 ohm NO STUFF
R4130 0ohm
0805 0.05 ohm NO STUFF
L18 1uH
SMD_5X5 COMMON
5.5A
0.400
12V
12V_F
12V_INN_1
OUT
12V_INP_1
OUT
PCB CO-LAYOUT
C65
270uF
COMMON
20%
16V@105degC
AL-Polymer
5.08A@105degC,100KHz
0.01ohm
TH_D63P25
GND
PEX8 INPUT 1 - 2x4 PCIE CON 150W
J7
RECEPTACLE
4.2MM
90
PCIEPWR
COMMON
PCI_Express Power
1 12V
2 12V
3 12V
PRSNT1*
PRSNT2*
GND8
GND7
GND5
GND
12.5A
12V_PEX6_INP
0.400
C236
0.1uF
16V
10%
X7R
0402
COMMON
C235
1uF
16V
10%
X6S
0603
COMMON
12V
C234
1uF
16V
10%
X6S
0603
COMMON
GND
12V_PEX6_1_INP
OUT
12V_PEX6_1_INN
OUT
RSENSE 2
RS2
0.005ohm
2512_2PIN_KELVIN
COMMON
12V
0.400
12.5A
12V_PEX6_INN
0.00324ohm
18A
16A
L21 1uH
TH COMMON
C738
1uF
16V
10%
X6S
0603
COMMON
C222
1uF
16V
10%
X6S
0603
COMMON
C223
1uF
16V
10%
X6S
0603
COMMON
GND
12.5A
0.400
12V
12V_PEX6_8_F1
MISC_VIN_INP_1
OUT
MISC_VIN_INN_1
OUT
12V_PEX6_8_MISC
RSENSE 3
RS1
0.005ohm
2512_2PIN_KELVIN
COMMON
C220
100uF
changed
20%
20V@125degC
AL-Polymer
3.2A@40degC,100KHz
0.04ohm
SMD_7343
GND
PCB CO-LAYOUT
12V_F
R303
40.2k
1 %
0402
NO STUFF
3V3_F
R300
10k
5 %
0402
COMMON
INPUT_PEX6_8_DT1*
R302
13.3k
1 %
0402
NO STUFF
GND
PEX 6/8 Input Present 1
R301 1k
0402 1 % COMMON
INPUT_PEX6_8_DT1_R*
0.400
OUT
C237
0.1uF
16V
10%
X7R
0402
COMMON
GND
12V_F
R304
40.2k
1 %
0402
NO STUFF
3V3_F
R307
10k
5 %
0402
COMMON
INPUT_PEX6_8_DT2*
R305
13.3k
1 %
0402
NO STUFF
GND
PEX 8 Input Present 2
R308 1k
0402 1 % COMMON
INPUT_PEX6_8_DT2_R*
OUT
C238
0.1uF
16V
10%
X7R
0402
COMMON
GND

ASSEMBLY	<ASSEMBLY_DESCRIPTION>
PAGE DETAIL	PS: Input, Filtering, and Monitoring

ALL NVIDIA DESIGN SPECIFICATIONS, REFERENCE SPECIFICATIONS, REFERENCE BOARDS, FILES, DRAWINGS, DIAGNOSTICS, LISTS AND OTHER DOCUMENTS OR INFORMATION (TOGETHER AND SEPARATELY, 'MATERIALS') ARE BEING PROVIDED 'AS IS'. THE MATERIALS MAY CONTAIN KNOWN AND UNKNOWN VIOLATIONS OR DEVIATIONS OF INDUSTRY STANDARDS AND SPECIFICATIONS. NVIDIA MAKES NO WARRANTIES, EXPRESSED, IMPLIED, STATUTORY OR OTHERWISE WITH RESPECT TO THE MATERIALS OR OTHERWISE, AND EXPRESSLY DISCLAIMS ALL IMPLIED WARRANTIES INCLUDING, WITHOUT LIMITATION, THE WARRANTIES OF DESIGN, OF NONINFRINGEMENT, MERCHANTABILITY OR FITNESS FOR A PARTICULAR PURPOSE, OR ARISING FROM A COURSE OF DEALING, TRADE USAGE, TRADE PRACTICE, OR INDUSTRY STANDARDS.

RD Center
Colorful Co.,Ltd
深圳市七彩虹科技 发 展 有限 公 司

Size	Document Number	Rev
Custom	PG161H6-E10	A

Date: Thursday, November 01, 2018 Sheet 38 of 53

Page39: PS: HOT-UNPLUG, UNDER POWER BOOT, CURRENT STEERING

PEX Input Present 1

POWER CONNECTOR HOT-UNPLUG DETECT

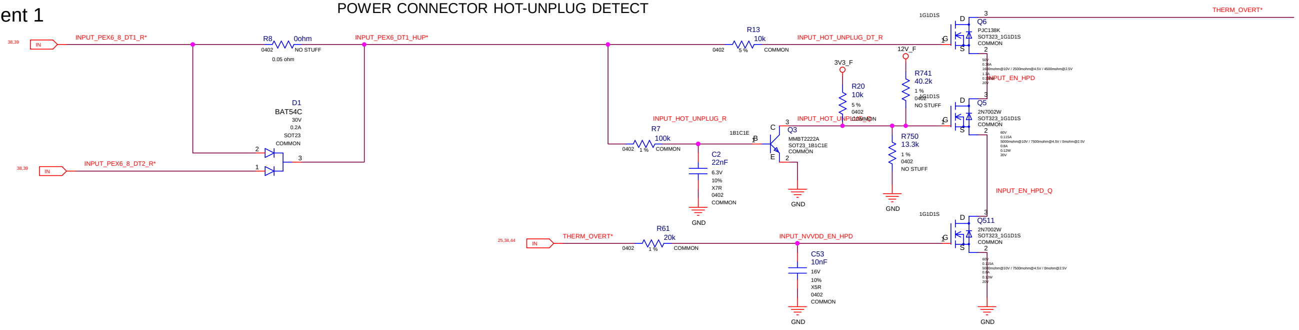
38,39
IN
INPUT_PEX6_8_DT1_R*
R8
0ohm
0402
NO STUFF
0.05 ohm
INPUT_PEX6_DT1_HUP*
D1
BAT54C
30V
0.2A
SOT23
COMMON
2
1
3
38,39
IN
INPUT_PEX6_8_DT2_R*
R13
10k
0402
5 %
COMMON
INPUT_HOT_UNPLUG_DT_R
1G1D1S
D
Q6
PJC138K
SOT323_1G1D1S
COMMON
G
S
3
2
THERM_OVERT*
12V_F
3V3_F
R20
10k
5 %
0402
COMMON
R741
40.2k
1 %
0402
NO STUFF
INPUT_EN_HPD
1G1D1S
Q5
2N7002W
SOT323_1G1D1S
COMMON
60V
0.115A
5000mohm@10V / 7500mohm@4.5V / 0mohm@2.5V
0.8A
0.12W
20V
INPUT_HOT_UNPLUG_R
R7
100k
0402
1 %
COMMON
1B1C1E
B
C
E
Q3
MMBT2222A
SOT23_1B1C1E
COMMON
INPUT_HOT_UNPLUG_Q
C2
22nF
6.3V
10%
X7R
0402
COMMON
GND
R750
13.3k
1 %
0402
NO STUFF
INPUT_EN_HPD_Q
1G1D1S
Q511
2N7002W
SOT323_1G1D1S
COMMON
25,34,44
IN
THERM_OVERT*
R61
20k
0402
1 %
COMMON
INPUT_NVVDD_EN_HPD
C53
10nF
16V
10%
X5R
0402
COMMON
GND

12V CURRENT STEERING (UNDER POWER BOOT):

GUIDES CURRENT FROM PEX EDGE TO PEX 6 PIN INPUT AREA

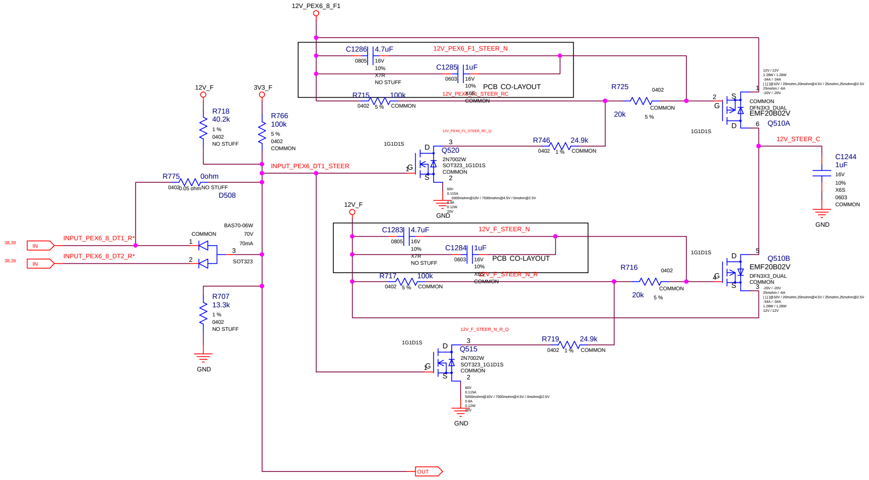
12V_PEX6_8_F1
C1286
4.7uF
0805
16V
10%
X7R
NO STUFF
12V_PEX6_F1_STEER_N
C1285
1uF
0603
16V
10%
X6S
PCB CO-LAYOUT
R715
100k
0402
5 %
COMMON
12V_PEX6_F1_STEER_RC
R725
20k
0402
5 %
COMMON
Q510A
EMF20B02V
DFN3X3_DUAL
COMMON
1G1D1S
12V_STEER_C
C1244
1uF
16V
10%
X6S
0603
COMMON
GND
12V_F
3V3_F
R718
40.2k
1 %
0402
NO STUFF
R766
100k
5 %
0402
COMMON
12V_PEX6_F1_STEER_RC_Q
R746
24.9k
0402
1 %
COMMON
1G1D1S
Q520
2N7002W
SOT323_1G1D1S
COMMON
INPUT_PEX6_DT1_STEER
R775
0ohm
0402
0.05 ohm
NO STUFF
D508
BAS70-06W
70V
70mA
SOT323
COMMON
38,39
IN
INPUT_PEX6_8_DT1_R*
38,39
IN
INPUT_PEX6_8_DT2_R*
12V_F
C1283
4.7uF
0805
16V
10%
X7R
NO STUFF
12V_F_STEER_N
C1284
1uF
0603
16V
10%
X6S
PCB CO-LAYOUT
R717
100k
0402
5 %
COMMON
12V_F_STEER_N_R
R716
20k
0402
5 %
COMMON
Q510B
EMF20B02V
DFN3X3_DUAL
COMMON
1G1D1S
R707
13.3k
1 %
0402
NO STUFF
GND
12V_F_STEER_N_R_Q
R719
24.9k
0402
1 %
COMMON
1G1D1S
Q515
2N7002W
SOT323_1G1D1S
COMMON
GND
OUT

PEX Input - Power Level/PSI* Control

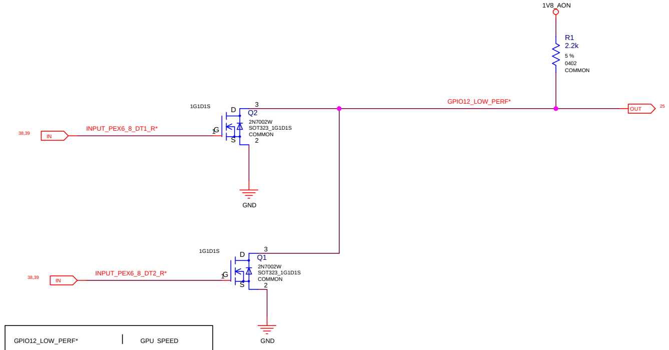
1V8_AON
R1
2.2k
5 %
0402
COMMON
GPIO12_LOW_PERF*
OUT
25
1G1D1S
Q2
2N7002W
SOT323_1G1D1S
COMMON
38,39
IN
INPUT_PEX6_8_DT1_R*
GND
1G1D1S
Q1
2N7002W
SOT323_1G1D1S
COMMON
38,39
IN
INPUT_PEX6_8_DT2_R*
GND

GPIO12_LOW_PERF*	GPU SPEED
0	Slow
1	Normal

ASSEMBLY <ASSEMBLY_DESCRIPTION>
PAGE DETAIL PS: STEERING, UPB & HOT-UNPLUG

ALL NVIDIA DESIGN SPECIFICATIONS, REFERENCE SPECIFICATIONS, REFERENCE BOARDS, FILES, DRAWINGS, DIAGNOSTICS, LISTS AND OTHER DOCUMENTS OR INFORMATION (TOGETHER AND SEPARATELY, 'MATERIALS') ARE BEING PROVIDED 'AS IS'. THE MATERIALS MAY CONTAIN KNOWN AND UNKNOWN VIOLATIONS OR DEVIATIONS OF INDUSTRY STANDARDS AND SPECIFICATIONS. NVIDIA MAKES NO WARRANTIES, EXPRESSED, IMPLIED, STATUTORY OR OTHERWISE WITH RESPECT TO THE MATERIALS OR OTHERWISE, AND EXPRESSLY DISCLAIMS ALL IMPLIED WARRANTIES INCLUDING, WITHOUT LIMITATION, THE WARRANTIES OF DESIGN, OF NONINFRINGEMENT, MERCHANTABILITY OR FITNESS FOR A PARTICULAR PURPOSE, OR ARISING FROM A COURSE OF DEALING, TRADE USAGE, TRADE PRACTICE, OR INDUSTRY STANDARDS.

RD Center
Colorful Co.,Ltd
深圳市七彩虹科技 发 展 有限 公 司

Size	Document Number	Rev
Custom	PG161H6-E10	A

Date: Thursday, November 08, 2018 Sheet 39 of 53

Page40: BUCKBOOST

ASSEMBLY	<ASSEMBLY_DESCRIPTION>
PAGE DETAIL	PS: Type-C BuckBoost

ALL NVIDIA DESIGN SPECIFICATIONS, REFERENCE SPECIFICATIONS, REFERENCE BOARDS, FILES, DRAWINGS, DIAGNOSTICS, LISTS AND OTHER DOCUMENTS OR INFORMATION (TOGETHER AND SEPARATELY, 'MATERIALS') ARE BEING PROVIDED 'AS IS'. THE MATERIALS MAY CONTAIN KNOWN AND UNKNOWN VIOLATIONS OR DEVIATIONS OF INDUSTRY STANDARDS AND SPECIFICATIONS. NVIDIA MAKES NO WARRANTIES, EXPRESSED, IMPLIED, STATUTORY OR OTHERWISE WITH RESPECT TO THE MATERIALS OR OTHERWISE, AND EXPRESSLY DISCLAIMS ALL IMPLIED WARRANTIES INCLUDING, WITHOUT LIMITATION, THE WARRANTIES OF DESIGN, OF NONINFRINGEMENT, MERCHANTABILITY OR FITNESS FOR A PARTICULAR PURPOSE, OR ARISING FROM A COURSE OF DEALING, TRADE USAGE, TRADE PRACTICE, OR INDUSTRY STANDARDS.

RD Center
Colorful Co.,Ltd
深圳市七彩虹科技 发 展 有限 公 司

Size	Document Number	Rev
Custom	PG161H6-E10	A

Date: Wednesday, October 31, 2018 Sheet 40 of 53

Page41: PPC

ASSEMBLY	<ASSEMBLY_DESCRIPTION>
PAGE DETAIL	PD PPC

ALL NVIDIA DESIGN SPECIFICATIONS, REFERENCE SPECIFICATIONS, REFERENCE BOARDS, FILES, DRAWINGS, DIAGNOSTICS, LISTS AND OTHER DOCUMENTS OR INFORMATION (TOGETHER AND SEPARATELY, 'MATERIALS') ARE BEING PROVIDED 'AS IS'. THE MATERIALS MAY CONTAIN KNOWN AND UNKNOWN VIOLATIONS OR DEVIATIONS OF INDUSTRY STANDARDS AND SPECIFICATIONS. NVIDIA MAKES NO WARRANTIES, EXPRESSED, IMPLIED, STATUTORY OR OTHERWISE WITH RESPECT TO THE MATERIALS OR OTHERWISE, AND EXPRESSLY DISCLAIMS ALL IMPLIED WARRANTIES INCLUDING, WITHOUT LIMITATION, THE WARRANTIES OF DESIGN, OF NONINFRINGEMENT, MERCHANTABILITY OR FITNESS FOR A PARTICULAR PURPOSE, OR ARISING FROM A COURSE OF DEALING, TRADE USAGE, TRADE PRACTICE, OR INDUSTRY STANDARDS.

RD Center
Colorful Co.,Ltd
深圳市七彩虹科技发展有限公司

Size	Document Number	Rev
Custom	PG161H6-E10	A

Date: Wednesday, October 31, 2018 Sheet 41 of 53

Page42: 12V & 3V3_A SWITCHER

ASSEMBLY	<ASSEMBLY_DESCRIPTION>
PAGE DETAIL	PS: 12V & 3V3_A SWITCHER

ALL NVIDIA DESIGN SPECIFICATIONS, REFERENCE SPECIFICATIONS, REFERENCE BOARDS, FILES, DRAWINGS, DIAGNOSTICS, LISTS AND OTHER DOCUMENTS OR INFORMATION (TOGETHER AND SEPARATELY, 'MATERIALS') ARE BEING PROVIDED 'AS IS'. THE MATERIALS MAY CONTAIN KNOWN AND UNKNOWN VIOLATIONS OR DEVIATIONS OF INDUSTRY STANDARDS AND SPECIFICATIONS. NVIDIA MAKES NO WARRANTIES, EXPRESSED, IMPLIED, STATUTORY OR OTHERWISE WITH RESPECT TO THE MATERIALS OR OTHERWISE, AND EXPRESSLY DISCLAIMS ALL IMPLIED WARRANTIES INCLUDING, WITHOUT LIMITATION, THE WARRANTIES OF DESIGN, OF NONINFRINGEMENT, MERCHANTABILITY OR FITNESS FOR A PARTICULAR PURPOSE, OR ARISING FROM A COURSE OF DEALING, TRADE USAGE, TRADE PRACTICE, OR INDUSTRY STANDARDS.

RD Center
Colorful Co.,Ltd
深圳市七彩虹科技发展有限公司

Size Custom	Document Number PG161H6-E10		Rev A
Date:	Wednesday, October 31, 2018	Sheet 42 of 53	

Page43: SEQ:5V,1V8,NV3V3 ENABLE

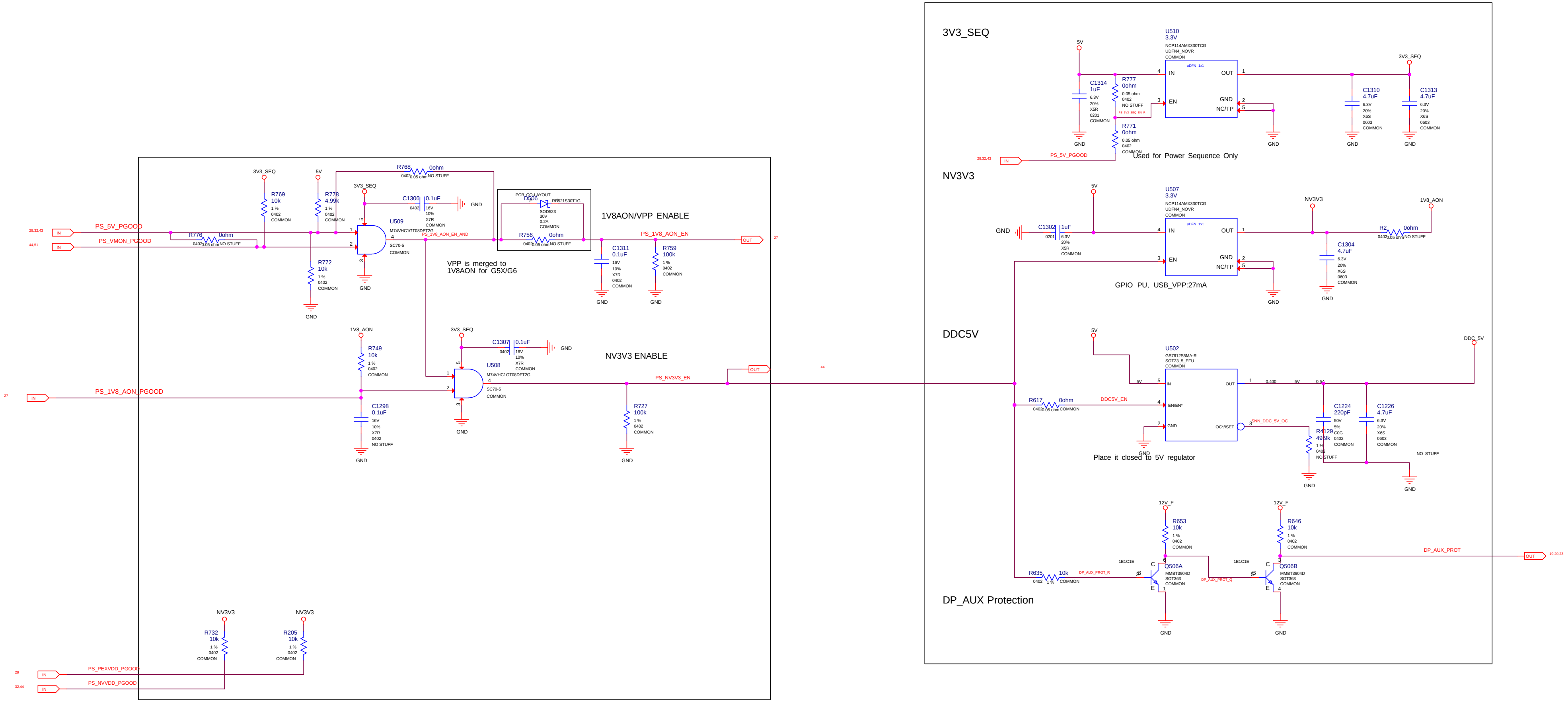
3V3_SEQ
5V
R769
10k
1 %
0402
COMMON
R778
4.99k
R768
0ohm
0402 0.05 ohm NO STUFF
C1306
0.1uF
16V
10%
X7R
COMMON
GND
PCB_CO-LAYOUT
D506
RB521S30T1G
SOD523
30V
0.2A
1V8AON/VPP ENABLE
28,32,43
IN
PS_5V_PGOOD
44,51
PS_VMON_PGOOD
R776
0ohm
U509
M74VHC1GT08DFT2G
SC70-5
PS_1V8_AON_EN_AND
R756
PS_1V8_AON_EN
OUT
27
R772
10k
C1311
0.1uF
R759
100k
VPP is merged to 1V8AON for G5X/G6
1V8_AON
R749
10k
C1307
0.1uF
NV3V3 ENABLE
U508
PS_NV3V3_EN
44
PS_1V8_AON_PGOOD
C1298
0.1uF
NO STUFF
R727
100k
NV3V3
R732
10k
R205
10k
29
PS_PEXVDD_PGOOD
32,44
PS_NVVDD_PGOOD
3V3_SEQ
U510
3.3V
NCP114AMX330TCG
UDFN4_NOVR
uDFN 1x1
IN
OUT
EN
GND
NC/TP
C1314
1uF
6.3V
20%
X5R
0201
R777
0ohm
PS_3V3_SEQ_EN_R
R771
0ohm
C1310
4.7uF
X6S
0603
C1313
4.7uF
Used for Power Sequence Only
NV3V3
U507
3.3V
C1302
1uF
R2
0ohm
C1304
4.7uF
GPIO PU, USB_VPP:27mA
DDC5V
U502
GS7612S5MA-R
SOT23_5_EFU
EN/EN*
OC*/ISET
0.400
0.5A
DDC_5V
R617
0ohm
DDC5V_EN
SNN_DDC_5V_OC
R4129
49.9k
C1224
220pF
50V
5%
C0G
C1226
4.7uF
Place it closed to 5V regulator
12V_F
R653
10k
R646
10k
1B1C1E
Q506A
Q506B
MMBT3904D
SOT363
R635
10k
DP_AUX_PROT_R
DP_AUX_PROT_Q
DP_AUX_PROT
19,20,23
DP_AUX Protection

ASSEMBLY <ASSEMBLY_DESCRIPTION>
PAGE DETAIL SEQ: 5V, 1V8, NV3V3 ENABLE

ALL NVIDIA DESIGN SPECIFICATIONS, REFERENCE SPECIFICATIONS, REFERENCE BOARDS, FILES, DRAWINGS, DIAGNOSTICS, LISTS AND OTHER DOCUMENTS OR INFORMATION (TOGETHER AND SEPARATELY, 'MATERIALS') ARE BEING PROVIDED 'AS IS'. THE MATERIALS MAY CONTAIN KNOWN AND UNKNOWN VIOLATIONS OR DEVIATIONS OF INDUSTRY STANDARDS AND SPECIFICATIONS. NVIDIA MAKES NO WARRANTIES, EXPRESSED, IMPLIED, STATUTORY OR OTHERWISE WITH RESPECT TO THE MATERIALS OR OTHERWISE, AND EXPRESSLY DISCLAIMS ALL IMPLIED WARRANTIES INCLUDING, WITHOUT LIMITATION, THE WARRANTIES OF DESIGN, OF NONINFRINGEMENT, MERCHANTABILITY OR FITNESS FOR A PARTICULAR PURPOSE, OR ARISING FROM A COURSE OF DEALING, USAGE, TRADE PRACTICE, OR INDUSTRY STANDARDS.

RD Center
Colorful Co.,Ltd
深圳市七彩虹科技发展有限公司

Size Custom
Document Number PG161H6-E10
Rev A
Date: Wednesday, October 31, 2018
Sheet 43 of 53

Page44: SEQ:NV,PEX,FB ENABLE

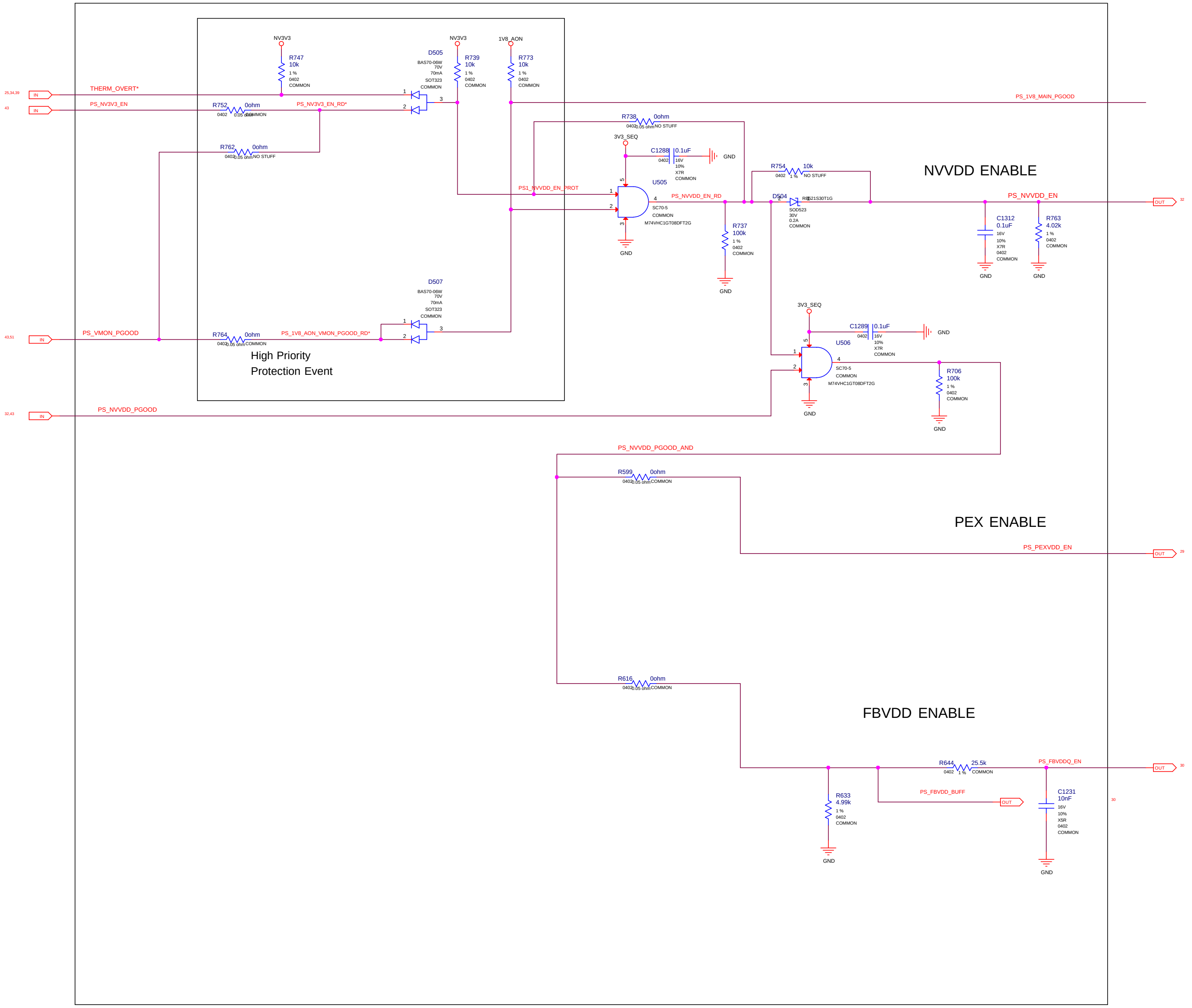
NV3V3
R747
10k
1 %
0402
COMMON
NV3V3
D505
BAS70-06W
70V
70mA
SOT323
COMMON
R739
10k
1 %
0402
COMMON
1V8_AON
R773
10k
1 %
0402
COMMON
25,34,39
IN
THERM_OVERT*
43
IN
PS_NV3V3_EN
R752
0ohm
0402
0.05 ohm
COMMON
PS_NV3V3_EN_RD*
1
2
3
PS_1V8_MAIN_PGOOD
R738
0ohm
0402
0.05 ohm
NO STUFF
R762
0ohm
0402
0.05 ohm
NO STUFF
3V3_SEQ
C1288
0.1uF
0402
16V
10%
X7R
COMMON
GND
R754
10k
0402
1 %
NO STUFF
NVVDD ENABLE
PS1_NVVDD_EN_PROT
U505
5
1
2
3
4
PS_NVVDD_EN_RD
SC70-5
COMMON
M74VHC1GT08DFT2G
GND
D504
RB521S30T1G
SOD523
30V
0.2A
COMMON
PS_NVVDD_EN
OUT
32
C1312
0.1uF
16V
10%
X7R
0402
COMMON
GND
R763
4.02k
1 %
0402
COMMON
GND
R737
100k
1 %
0402
COMMON
GND
D507
BAS70-06W
70V
70mA
SOT323
COMMON
3V3_SEQ
C1289
0.1uF
0402
16V
10%
X7R
COMMON
GND
U506
SC70-5
COMMON
M74VHC1GT08DFT2G
GND
R706
100k
1 %
0402
COMMON
GND
43,51
IN
PS_VMON_PGOOD
R764
0ohm
0402
0.05 ohm
COMMON
PS_1V8_AON_VMON_PGOOD_RD*
High Priority
Protection Event
32,43
IN
PS_NVVDD_PGOOD
PS_NVVDD_PGOOD_AND
R599
0ohm
0402
0.05 ohm
COMMON
PEX ENABLE
PS_PEXVDD_EN
OUT
29
R616
0ohm
0402
0.05 ohm
COMMON
FBVDD ENABLE
R644
25.5k
0402
1 %
COMMON
PS_FBVDDQ_EN
OUT
30
PS_FBVDD_BUFF
OUT
30
R633
4.99k
1 %
0402
COMMON
GND
C1231
10nF
16V
10%
X5R
0402
COMMON
GND

ASSEMBLY <ASSEMBLY_DESCRIPTION>
PAGE DETAIL SEQ: NV, PEX, FB ENABLE

ALL NVIDIA DESIGN SPECIFICATIONS, REFERENCE SPECIFICATIONS, REFERENCE BOARDS, FILES, DRAWINGS, DIAGNOSTICS, LISTS AND OTHER DOCUMENTS OR INFORMATION (TOGETHER AND SEPARATELY, 'MATERIALS') ARE BEING PROVIDED 'AS IS'. THE MATERIALS MAY CONTAIN KNOWN AND UNKNOWN VIOLATIONS OR DEVIATIONS OF INDUSTRY STANDARDS AND SPECIFICATIONS. NVIDIA MAKES NO WARRANTIES, EXPRESSED, IMPLIED, STATUTORY OR OTHERWISE WITH RESPECT TO THE MATERIALS OR OTHERWISE, AND EXPRESSLY DISCLAIMS ALL IMPLIED WARRANTIES INCLUDING, WITHOUT LIMITATION, THE WARRANTIES OF DESIGN, OF NONINFRINGEMENT, MERCHANTABILITY OR FITNESS FOR A PARTICULAR PURPOSE, OR ARISING FROM A COURSE OF DEALING, TRADE USAGE, TRADE PRACTICE, OR INDUSTRY STANDARDS.

RD Center
Colorful Co.,Ltd
深圳市七彩虹科技发展有限公司

Size	Document Number	Rev
Custom	PG161H6-E10	A

Date: Wednesday, October 31, 2018 Sheet 44 of 53

Page45: SEQUENCE:Voltage Monitor

ASSEMBLY	<ASSEMBLY_DESCRIPTION>
PAGE DETAIL	SEQ: VOLTAGE MONITOR

ALL NVIDIA DESIGN SPECIFICATIONS, REFERENCE SPECIFICATIONS, REFERENCE BOARDS, FILES, DRAWINGS, DIAGNOSTICS, LISTS AND OTHER DOCUMENTS OR INFORMATION (TOGETHER AND SEPARATELY, 'MATERIALS') ARE BEING PROVIDED 'AS IS'. THE MATERIALS MAY CONTAIN KNOWN AND UNKNOWN VIOLATIONS OR DEVIATIONS OF INDUSTRY STANDARDS AND SPECIFICATIONS. NVIDIA MAKES NO WARRANTIES, EXPRESSED, IMPLIED, STATUTORY OR OTHERWISE WITH RESPECT TO THE MATERIALS OR OTHERWISE, AND EXPRESSLY DISCLAIMS ALL IMPLIED WARRANTIES INCLUDING, WITHOUT LIMITATION, THE WARRANTIES OF DESIGN, OF NONINFRINGEMENT, MERCHANTABILITY OR FITNESS FOR A PARTICULAR PURPOSE, OR ARISING FROM A COURSE OF DEALING, TRADE USAGE, TRADE PRACTICE, OR INDUSTRY STANDARDS.

RD Center
Colorful Co.,Ltd
深圳市七彩虹科技发展有限公司

Size Custom
Document Number PG161H6-E10
Rev A

Date: Wednesday, October 31, 2018

Page46: SEQUENCE:Discharge

ASSEMBLY	<ASSEMBLY_DESCRIPTION>
PAGE DETAIL	SEQ: DISCHARGE

ALL NVIDIA DESIGN SPECIFICATIONS, REFERENCE SPECIFICATIONS, REFERENCE BOARDS, FILES, DRAWINGS, DIAGNOSTICS, LISTS AND OTHER DOCUMENTS OR INFORMATION (TOGETHER AND SEPARATELY, 'MATERIALS') ARE BEING PROVIDED 'AS IS'. THE MATERIALS MAY CONTAIN KNOWN AND UNKNOWN VIOLATIONS OR DEVIATIONS OF INDUSTRY STANDARDS AND SPECIFICATIONS. NVIDIA MAKES NO WARRANTIES, EXPRESSED, IMPLIED, STATUTORY OR OTHERWISE WITH RESPECT TO THE MATERIALS OR OTHERWISE, AND EXPRESSLY DISCLAIMS ALL IMPLIED WARRANTIES INCLUDING, WITHOUT LIMITATION, THE WARRANTIES OF DESIGN, OF NONINFRINGEMENT, MERCHANTABILITY OR FITNESS FOR A PARTICULAR PURPOSE, OR ARISING FROM A COURSE OF DEALING, TRADE USAGE, TRADE PRACTICE, OR INDUSTRY STANDARDS.

RD Center
Colorful Co.,Ltd
深圳市七彩虹科技发展有限公司

Size Custom
Document Number PG161H6-E10
Rev A
Date: Wednesday, October 31, 2018
Sheet 46 of 53

Page47: SEQUENCE:MISC

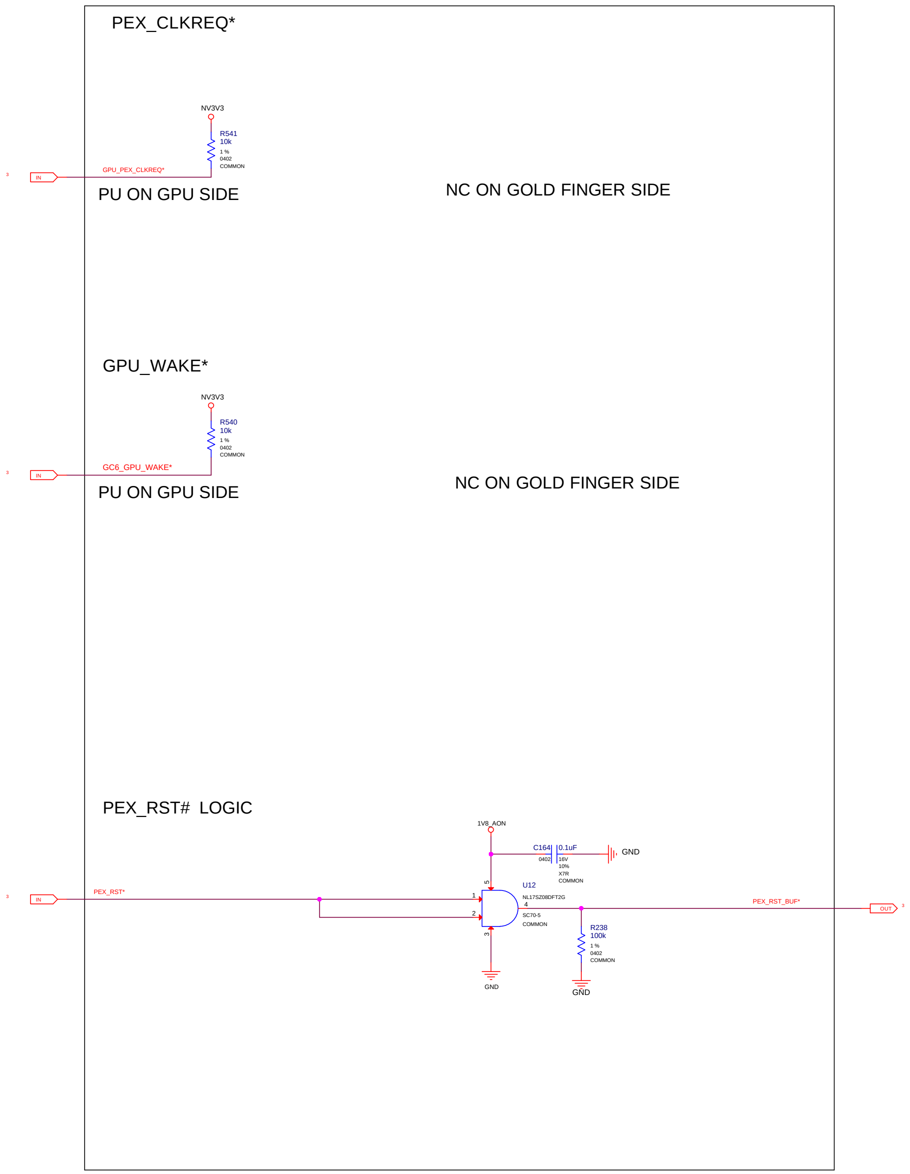
PEX_CLKREQ*
NV3V3
R541
10k
1 %
0402
COMMON
3
IN
GPU_PEX_CLKREQ*
PU ON GPU SIDE
NC ON GOLD FINGER SIDE
GPU_WAKE*
NV3V3
R540
10k
1 %
0402
COMMON
3
IN
GC6_GPU_WAKE*
PU ON GPU SIDE
NC ON GOLD FINGER SIDE
PEX_RST# LOGIC
1V8_AON
C164
0.1uF
0402
16V
10%
X7R
COMMON
GND
U12
NL17SZ08DFT2G
SC70-5
COMMON
5
1
2
3
4
GND
3
IN
PEX_RST*
R238
100k
1 %
0402
COMMON
GND
PEX_RST_BUF*
OUT
3

ASSEMBLY	<ASSEMBLY_DESCRIPTION>
PAGE DETAIL	SEQ: MISC

ALL NVIDIA DESIGN SPECIFICATIONS, REFERENCE SPECIFICATIONS, REFERENCE BOARDS, FILES, DRAWINGS, DIAGNOSTICS, LISTS AND OTHER DOCUMENTS OR INFORMATION (TOGETHER AND SEPARATELY, 'MATERIALS') ARE BEING PROVIDED 'AS IS'. THE MATERIALS MAY CONTAIN KNOWN AND UNKNOWN VIOLATIONS OR DEVIATIONS OF INDUSTRY STANDARDS AND SPECIFICATIONS. NVIDIA MAKES NO WARRANTIES, EXPRESSED, IMPLIED, STATUTORY OR OTHERWISE WITH RESPECT TO THE MATERIALS OR OTHERWISE, AND EXPRESSLY DISCLAIMS ALL IMPLIED WARRANTIES INCLUDING, WITHOUT LIMITATION, THE WARRANTIES OF DESIGN, OF NONINFRINGEMENT, MERCHANTABILITY OR FITNESS FOR A PARTICULAR PURPOSE, OR ARISING FROM A COURSE OF DEALING, TRADE USAGE, TRADE PRACTICE, OR INDUSTRY STANDARDS.

RD Center
Colorful Co.,Ltd
深圳市七彩虹科技发展有限公司

Size	Document Number	Rev
Custom	PG161H6-E10	A

Date: Wednesday, October 31, 2018

Page48: LOGO LED

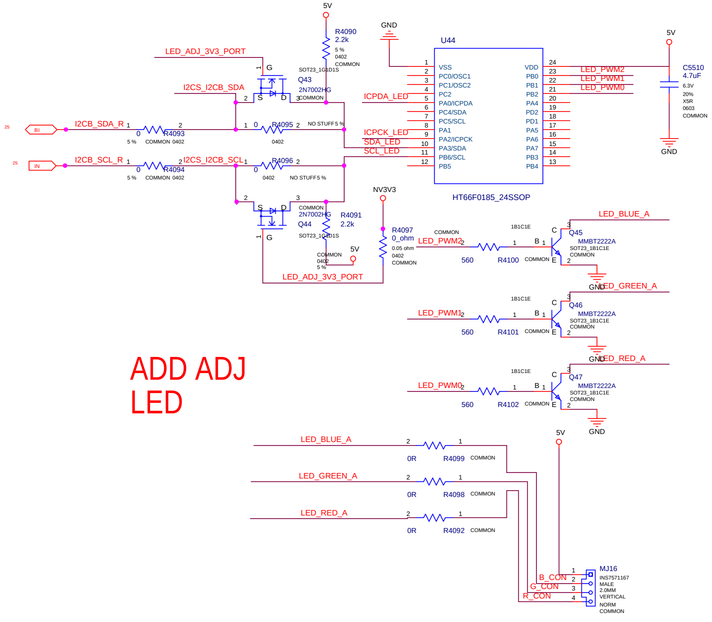
5V
R4090
2.2k
5 %
0402
COMMON
GND
U44
5V
LED_ADJ_3V3_PORT
G
SOT23_1G1D1S
Q43
2N7002HG
COMMON
I2CS_I2CB_SDA
S
D
ICPDA_LED
BI
I2CB_SDA_R
R4093
0
5 %
COMMON 0402
R4095
0402
NO STUFF 5 %
ICPCK_LED
SDA_LED
SCL_LED
IN
I2CB_SCL_R
R4094
I2CS_I2CB_SCL
R4096
VSS
PC0/OSC1
PC1/OSC2
PC2
PA0/ICPDA
PC4/SDA
PC5/SCL
PA1
PA2/ICPCK
PA3/SDA
PB6/SCL
PB5
VDD
PB0
PB1
PB2
PA4
PD2
PD1
PA5
PA6
PA7
PB3
PB4
LED_PWM2
LED_PWM1
LED_PWM0
C5510
4.7uF
6.3V
20%
X5R
0603
COMMON
GND
HT66F0185_24SSOP
NV3V3
Q44
R4091
2.2k
R4097
0_ohm
0.05 ohm
0402
COMMON
LED_BLUE_A
Q45
MMBT2222A
SOT23_1B1C1E
1B1C1E
R4100
560
LED_GREEN_A
Q46
R4101
LED_RED_A
Q47
R4102
ADD ADJ
LED
R4099
0R
R4098
R4092
MJ16
INS7571167
MALE
2.0MM
VERTICAL
NORM
COMMON
B_CON
G_CON
R_CON

ASSEMBLY <ASSEMBLY_DESCRIPTION>
PAGE DETAIL LOGO LED

ALL NVIDIA DESIGN SPECIFICATIONS, REFERENCE SPECIFICATIONS, REFERENCE BOARDS, FILES, DRAWINGS, DIAGNOSTICS, LISTS AND OTHER DOCUMENTS OR INFORMATION (TOGETHER AND SEPARATELY, 'MATERIALS') ARE BEING PROVIDED 'AS IS'. THE MATERIALS MAY CONTAIN KNOWN AND UNKNOWN VIOLATIONS OR DEVIATIONS OF INDUSTRY STANDARDS AND SPECIFICATIONS. NVIDIA MAKES NO WARRANTIES, EXPRESSED, IMPLIED, STATUTORY OR OTHERWISE WITH RESPECT TO THE MATERIALS OR OTHERWISE, AND EXPRESSLY DISCLAIMS ALL IMPLIED WARRANTIES INCLUDING, WITHOUT LIMITATION, THE WARRANTIES OF NONINFRINGEMENT, MERCHANTABILITY OR FITNESS FOR A PARTICULAR PURPOSE, OR ARISING FROM A COURSE OF DEALING, TRADE USAGE, TRADE PRACTICE, OR INDUSTRY STANDARDS.

RD Center
Colorful Co.,Ltd
深圳市七彩虹科技 发展有限 公 司

Size	Document Number	Rev
Custom	PG161H6-E10	A

Date: Wednesday, October 31, 2018 Sheet 48 of 53

Page49: LED DRIVER & Boost

ASSEMBLY	<ASSEMBLY_DESCRIPTION>
PAGE DETAIL	LED DRIVER & BOOST

ALL NVIDIA DESIGN SPECIFICATIONS, REFERENCE SPECIFICATIONS, REFERENCE BOARDS, FILES, DRAWINGS, DIAGNOSTICS, LISTS AND OTHER DOCUMENTS OR INFORMATION (TOGETHER AND SEPARATELY, 'MATERIALS') ARE BEING PROVIDED 'AS IS'. THE MATERIALS MAY CONTAIN KNOWN AND UNKNOWN VIOLATIONS OR DEVIATIONS OF INDUSTRY STANDARDS AND SPECIFICATIONS. NVIDIA MAKES NO WARRANTIES, EXPRESSED, IMPLIED, STATUTORY OR OTHERWISE WITH RESPECT TO THE MATERIALS OR OTHERWISE, AND EXPRESSLY DISCLAIMS ALL IMPLIED WARRANTIES INCLUDING, WITHOUT LIMITATION, THE WARRANTIES OF DESIGN, OF NONINFRINGEMENT, MERCHANTABILITY OR FITNESS FOR A PARTICULAR PURPOSE, OR ARISING FROM A COURSE OF DEALING, TRADE USAGE, TRADE PRACTICE, OR INDUSTRY STANDARDS.

RD Center
Colorful Co.,Ltd
深圳市七彩虹科技发展有限公司

Size	Document Number	Rev
Custom	PG161H6-E10	A

Date: Wednesday, October 31, 2018 Sheet 49 of 53

Page50: FAN

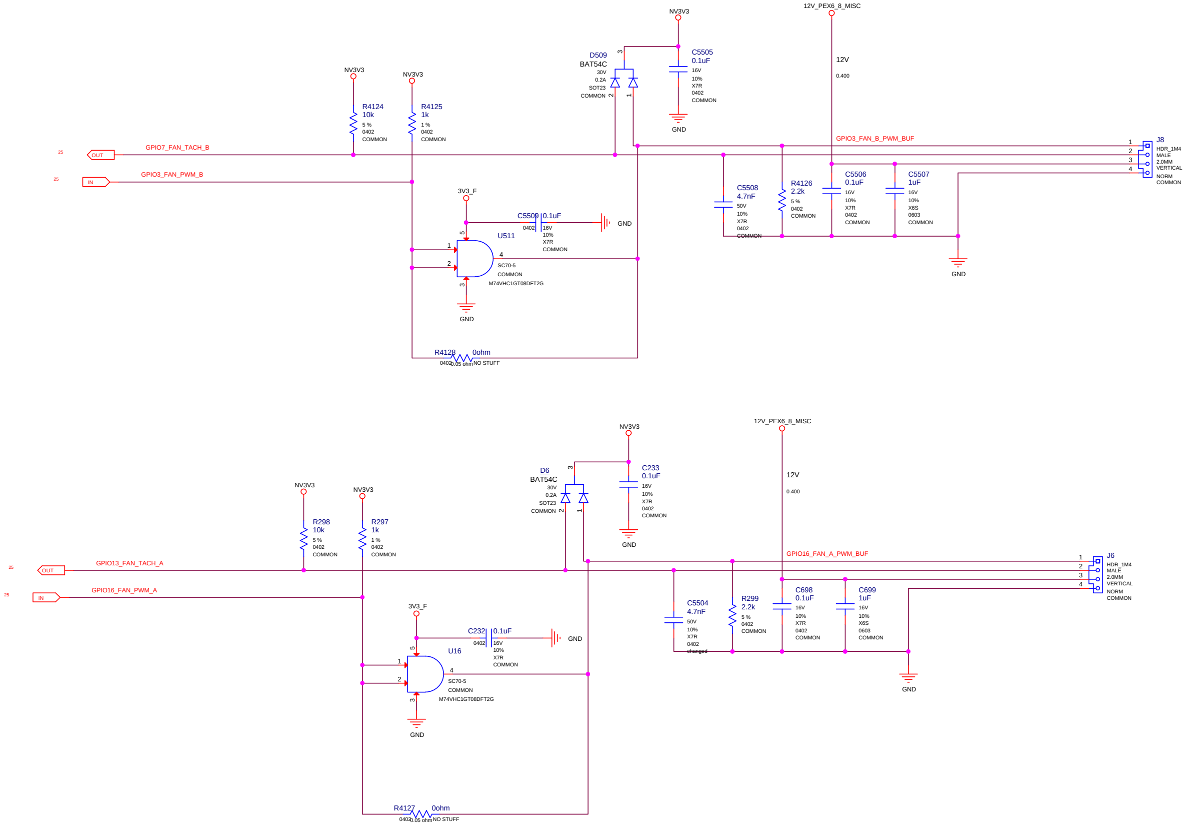
NV3V3
12V_PEX6_8_MISC
D509
BAT54C
30V
0.2A
SOT23
COMMON
C5505
0.1uF
16V
10%
X7R
0402
COMMON
GND
12V
0.400
NV3V3
NV3V3
R4124
10k
5 %
0402
COMMON
R4125
1k
1 %
0402
COMMON
25
OUT
GPIO7_FAN_TACH_B
25
IN
GPIO3_FAN_PWM_B
GPIO3_FAN_B_PWM_BUF
J8
HDR_1M4
MALE
2.0MM
VERTICAL
NORM
COMMON
1
2
3
4
3V3_F
C5509
0.1uF
0402
16V
10%
X7R
COMMON
GND
U511
SC70-5
COMMON
M74VHC1GT08DFT2G
C5508
4.7nF
50V
10%
X7R
0402
COMMON
R4126
2.2k
5 %
0402
COMMON
C5506
0.1uF
16V
10%
X7R
0402
COMMON
C5507
1uF
16V
10%
X6S
0603
COMMON
GND
GND
R4128
0ohm
0402
0.05 ohm
NO STUFF
NV3V3
12V_PEX6_8_MISC
D6
BAT54C
30V
0.2A
SOT23
COMMON
C233
0.1uF
16V
10%
X7R
0402
COMMON
GND
12V
0.400
NV3V3
NV3V3
R298
10k
5 %
0402
COMMON
R297
1k
1 %
0402
COMMON
25
OUT
GPIO13_FAN_TACH_A
25
IN
GPIO16_FAN_PWM_A
GPIO16_FAN_A_PWM_BUF
J6
HDR_1M4
MALE
2.0MM
VERTICAL
NORM
COMMON
1
2
3
4
3V3_F
C232
0.1uF
0402
16V
10%
X7R
COMMON
GND
U16
SC70-5
COMMON
M74VHC1GT08DFT2G
C5504
4.7nF
50V
10%
X7R
0402
changed
R299
2.2k
5 %
0402
COMMON
C698
0.1uF
16V
10%
X7R
0402
COMMON
C699
1uF
16V
10%
X6S
0603
COMMON
GND
GND
R4127
0ohm
0402
0.05 ohm
NO STUFF

ASSEMBLY	<ASSEMBLY_DESCRIPTION>
PAGE DETAIL	FAN

ALL NVIDIA DESIGN SPECIFICATIONS, REFERENCE SPECIFICATIONS, REFERENCE BOARDS, FILES, DRAWINGS, DIAGNOSTICS, LIST AND OTHER DOCUMENTS OR INFORMATION (TOGETHER AND SEPARATELY, 'MATERIALS') ARE BEING PROVIDED 'AS IS'. THE MATERIALS MAY CONTAIN KNOWN AND UNKNOWN VIOLATIONS OR DEVIATIONS OF INDUSTRY STANDARDS AND SPECIFICATIONS. NVIDIA MAKES NO WARRANTIES, EXPRESSED, IMPLIED, STATUTORY OR OTHERWISE WITH RESPECT TO THE MATERIALS OR OTHERWISE, AND EXPRESSLY DISCLAIMS ALL IMPLIED WARRANTIES INCLUDING, WITHOUT LIMITATION, THE WARRANTIES OF DESIGN, OF NONINFRINGEMENT, MERCHANTABILITY OR FITNESS FOR A PARTICULAR PURPOSE, OR ARISING FROM A COURSE OF DEALING, TRADE USAGE, TRADE PRACTICE, OR INDUSTRY STANDARDS.

RD Center
Colorful Co.,Ltd
深圳市七彩虹科技发展有限公司

Size	Document Number	Rev
Custom	PG161H6-E10	A

Date: Wednesday, October 31, 2018 Sheet 50 of 53

Page51: PWR SENSE

MODE PIN STATUS	MULTIPLEXER OPERATION
LOW	DEVICE A
TRI-STATE(FLOATING)	STAND-ALONE
HIGH	DEVICE B

ENABLE PIN STATUS	MULTIPLEXER OPERATION
LOW	FULLY FUNCTIONAL
TRI-STATE(FLOATING)	LIMITTED FUNCTION
HIGH	STANDBY

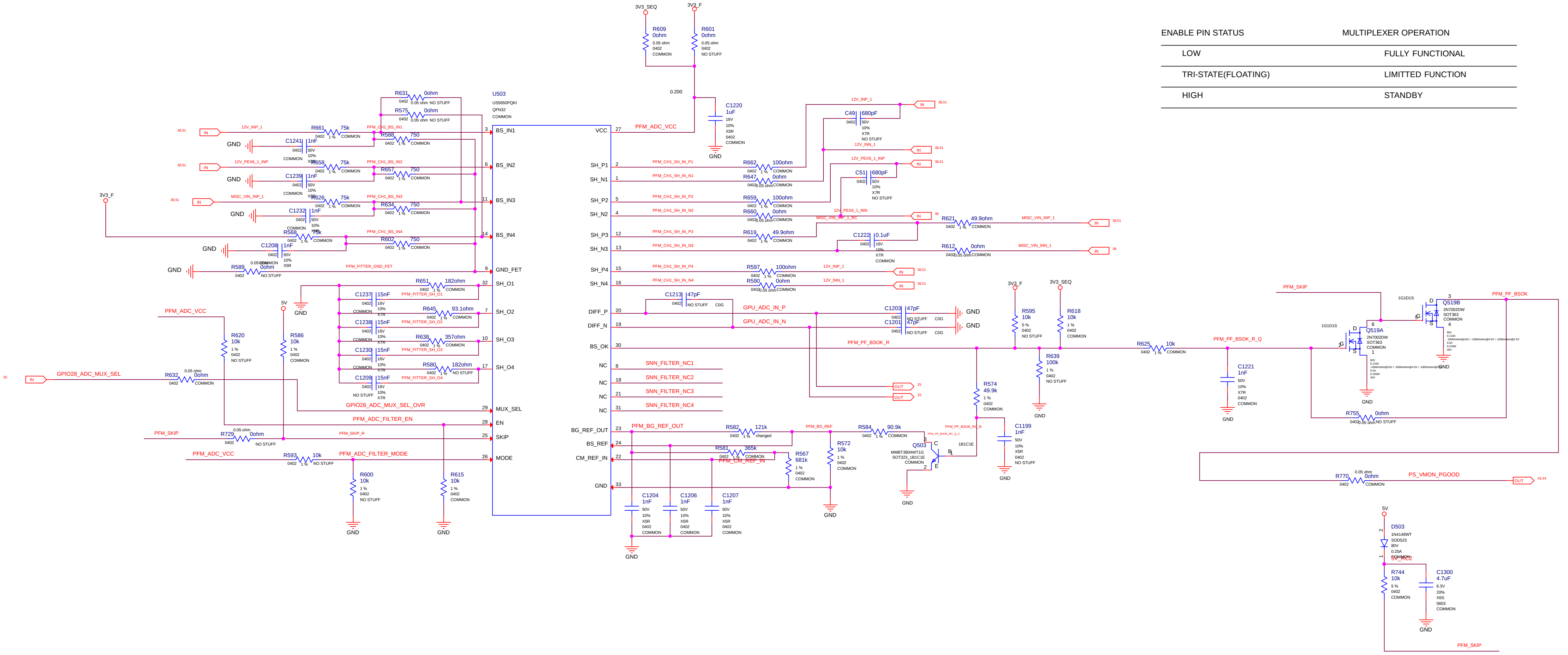
U503
US5650PQKI
QFN32
COMMON
BS_IN1
BS_IN2
BS_IN3
BS_IN4
GND_FET
SH_O1
SH_O2
SH_O3
SH_O4
MUX_SEL
EN
SKIP
MODE
VCC
SH_P1
SH_N1
SH_P2
SH_N2
SH_P3
SH_N3
SH_P4
SH_N4
DIFF_P
DIFF_N
BS_OK
NC
BG_REF_OUT
BS_REF
CM_REF_IN
GND
12V_INP_1
12V_PEX6_1_INP
MISC_VIN_INP_1
12V_INN_1
12V_PEX6_1_INN
MISC_VIN_INN_1
IN
OUT
3V3_F
3V3_SEQ
5V
PFM_ADC_VCC
PFM_CH1_BS_IN1
PFM_CH1_BS_IN2
PFM_CH1_BS_IN3
PFM_CH1_BS_IN4
PFM_FITTER_GND_FET
PFM_FITTER_SH_O1
PFM_FITTER_SH_O2
PFM_FITTER_SH_O3
PFM_FITTER_SH_O4
GPIO28_ADC_MUX_SEL
GPIO28_ADC_MUX_SEL_OVR
PFM_ADC_FILTER_EN
PFM_SKIP
PFM_SKIP_R
PFM_ADC_FILTER_MODE
PFM_CH1_SH_IN_P1
PFM_CH1_SH_IN_N1
PFM_CH1_SH_IN_P2
PFM_CH1_SH_IN_N2
PFM_CH1_SH_IN_P3
PFM_CH1_SH_IN_N3
PFM_CH1_SH_IN_P4
PFM_CH1_SH_IN_N4
GPU_ADC_IN_P
GPU_ADC_IN_N
PFM_PF_BSOK_R
PFM_PF_BSOK_R_Q
PFM_PF_BSOK
SNN_FILTER_NC1
SNN_FILTER_NC2
SNN_FILTER_NC3
SNN_FILTER_NC4
PFM_BG_REF_OUT
PFM_BS_REF
PFM_CM_REF_IN
PS_VMON_PGOOD
5V_NC2
R609 0ohm
R601 0ohm
R631 0ohm
R575 0ohm
R661 75k
R588 750
R658 75k
R657 750
R626 75k
R634 750
R568 75k
R602 750
R589 0ohm
R651 182ohm
R645 93.1ohm
R638 357ohm
R580 182ohm
R620 10k
R586 10k
R632 0ohm
R729 0ohm
R593 10k
R600 10k
R615 10k
R662 100ohm
R647 0ohm
R659 100ohm
R660 0ohm
R619 49.9ohm
R621 49.9ohm
R612 0ohm
R597 100ohm
R590 0ohm
R595 10k
R618 10k
R639 100k
R625 10k
R574 49.9k
R582 121k
R581 365k
R567 681k
R572 10k
R584 90.9k
R755 0ohm
R770 0ohm
R744 10k
C1220 1uF
C491 680pF
C511 680pF
C1222 0.1uF
C1241 1nF
C1239 1nF
C1232 1nF
C1208 1nF
C1237 15nF
C1238 15nF
C1230 15nF
C1209 15nF
C1213 47pF
C1203 47pF
C1201 47pF
C1204 1nF
C1206 1nF
C1207 1nF
C1199 1nF
C1221 1nF
C1300 4.7uF
Q503
MMBT3904WT1G
SOT323_1B1C1E
Q519A
Q519B
2N7002DW
SOT363
D503
1N4148WT
SOD523
0402
COMMON
NO STUFF
0.200
changed

ASSEMBLY	<ASSEMBLY_DESCRIPTION>
PAGE DETAIL	PS: Pre-filter

ALL NVIDIA DESIGN SPECIFICATIONS, REFERENCE SPECIFICATIONS, REFERENCE BOARDS, FILES, DRAWINGS, DIAGNOSTICS, LISTS AND OTHER DOCUMENTS OR INFORMATION (TOGETHER AND SEPARATELY, 'MATERIALS') ARE BEING PROVIDED 'AS IS'. THE MATERIALS MAY CONTAIN KNOWN AND UNKNOWN VIOLATIONS OR DEVIATIONS OF INDUSTRY STANDARDS AND SPECIFICATIONS. NVIDIA MAKES NO WARRANTIES, EXPRESSED, IMPLIED, STATUTORY OR OTHERWISE WITH RESPECT TO THE MATERIALS OR OTHERWISE, AND EXPRESSLY DISCLAIMS ALL IMPLIED WARRANTIES INCLUDING, WITHOUT LIMITATION, THE WARRANTIES OF DESIGN, OF NONINFRINGEMENT, MERCHANTABILITY OR FITNESS FOR A PARTICULAR PURPOSE, OR ARISING FROM A COURSE OF DEALING, TRADE USAGE, TRADE PRACTICE, OR INDUSTRY STANDARDS.

RD Center
Colorful Co.,Ltd
深圳市七彩虹科技 发 展 有限 公 司

Size	Document Number	Rev
Custom	PG161H6-E10	A

Date: Friday, November 09, 2018 Sheet 51 of 53

Page52: MECH

Bracket:

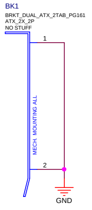
BK1
BRKT_DUAL_ATX_2TAB_PG161
ATX_2X_2P
NO STUFF
1
2
MECH. MOUNTING ALL
GND

MOUNTING HOLES FOR HS:

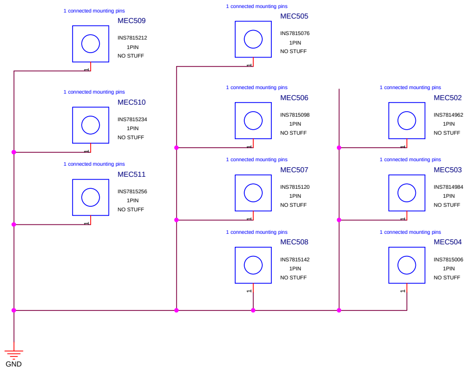
1 connected mounting pins
MEC509
INS7815212
1PIN
NO STUFF
1 connected mounting pins
MEC505
INS7815076
1PIN
NO STUFF
1 connected mounting pins
MEC510
INS7815234
1PIN
NO STUFF
1 connected mounting pins
MEC506
INS7815098
1PIN
NO STUFF
1 connected mounting pins
MEC502
INS7814962
1PIN
NO STUFF
1 connected mounting pins
MEC511
INS7815256
1PIN
NO STUFF
1 connected mounting pins
MEC507
INS7815120
1PIN
NO STUFF
1 connected mounting pins
MEC503
INS7814984
1PIN
NO STUFF
1 connected mounting pins
MEC508
INS7815142
1PIN
NO STUFF
1 connected mounting pins
MEC504
INS7815006
1PIN
NO STUFF
1
GND

BACK STIFFENER:

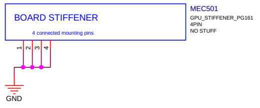
BOARD STIFFENER
4 connected mounting pins
MEC501
GPU_STIFFENER_PG161
4PIN
NO STUFF
1
2
3
4
GND

ASSEMBLY	<ASSEMBLY_DESCRIPTION>
PAGE DETAIL	MECH

ALL NVIDIA DESIGN SPECIFICATIONS, REFERENCE SPECIFICATIONS, REFERENCE BOARDS, FILES, DRAWINGS, DIAGNOSTICS, LISTS AND OTHER DOCUMENTS OR INFORMATION (TOGETHER AND SEPARATELY, 'MATERIALS') ARE BEING PROVIDED 'AS IS'. THE MATERIALS MAY CONTAIN KNOWN AND UNKNOWN VIOLATIONS OR DEVIATIONS OF INDUSTRY STANDARDS AND SPECIFICATIONS. NVIDIA MAKES NO WARRANTIES, EXPRESSED, IMPLIED, STATUTORY OR OTHERWISE WITH RESPECT TO THE MATERIALS OR OTHERWISE, AND EXPRESSLY DISCLAIMS ALL IMPLIED WARRANTIES INCLUDING, WITHOUT LIMITATION, THE WARRANTIES OF DESIGN, OF NONINFRINGEMENT, MERCHANTABILITY OR FITNESS FOR A PARTICULAR PURPOSE, OR ARISING FROM A COURSE OF DEALING, TRADE USAGE, TRADE PRACTICE, OR INDUSTRY STANDARDS.

RD Center
Colorful Co.,Ltd
深圳市七彩虹科技 发 展 有限 公 司

Size Custom	Document Number PG161H6-E10	Rev A
Date: Wednesday, October 31, 2018	Sheet 52 of 53	

Page53: PTC

ASSEMBLY	<ASSEMBLY_DESCRIPTION>
PAGE DETAIL	PTC

ALL NVIDIA DESIGN SPECIFICATIONS, REFERENCE SPECIFICATIONS, REFERENCE BOARDS, FILES, DRAWINGS, DIAGNOSTICS, LISTS AND OTHER DOCUMENTS OR INFORMATION (TOGETHER AND SEPARATELY, 'MATERIALS') ARE BEING PROVIDED 'AS IS'. THE MATERIALS MAY CONTAIN KNOWN AND UNKNOWN VIOLATIONS OR DEVIATIONS OF INDUSTRY STANDARDS AND SPECIFICATIONS. NVIDIA MAKES NO WARRANTIES, EXPRESSED, IMPLIED, STATUTORY OR OTHERWISE WITH RESPECT TO THE MATERIALS OR OTHERWISE, AND EXPRESSLY DISCLAIMS ALL IMPLIED WARRANTIES INCLUDING, WITHOUT LIMITATION, THE WARRANTIES OF DESIGN, OF NONINFRINGEMENT, MERCHANTABILITY OR FITNESS FOR A PARTICULAR PURPOSE, OR ARISING FROM A COURSE OF DEALING, TRADE USAGE, TRADE PRACTICE, OR INDUSTRY STANDARDS.

RD Center
Colorful Co.,Ltd
深圳市七彩虹科技发展有限公司

Size	Document Number	Rev
Custom	PG161H6-E10	A

Date: Wednesday, October 31, 2018 Sheet 53 of 53