PG142-B00

DP + DP + DP + HDMI/DP

TABLE OF CONTENTS

Page	Description
1	Table of Contents
2	Block Diagram
3	PCI Express
4	PCIE GEN4 RC TERMINATIONS
5	MEMORY: GPU FB_AB
6	MEMORY: FBA[31:0]
7	MEMORY: FBA[63:32]
8	MEMORY: FBB[31:0]
9	MEMORY: FBB[63:32]
10	MEMORY: GPU FB_CD
11	MEMORY: FBC[31:0]
12	MEMORY: FBC[63:32]
13	MEMORY: FBD[31:0]
14	MEMORY: FBD[63:32]
15	GPU PWR & GND 1
16	GPU PWR & GND 2
17	GPU PWR & GND 3 (XVDD)
18	GPU DECOUPLING FBVDDQ
19	GPU DECOUPLING NVVDD
20	GPU DECOUPLING NVVDD
21	IO: IFPAB NC
22	IO: IFPF DP
23	IO: IFPE DP
24	IO: IFPD DP
25	IO: IFPC HDMI/DP
26	MISC1: ROM, XTAL,STRAPS
27	MISC2: JTAG,GPIO,ADC,I2C,FL,STEERO
28	MISC3: RGB
29	PS: 1V8
30	PS: 5V
31	PS: PEXVDD
32	PS: FBVDDQ
33	PS: FBVDDQ PH2
34	PS: NVVDD Controller
35	BLANK PAGE
36	PS: NVVDD PH4, PH6
37	PS: NVVDD PH1, PH3
38	PS: NVVDD PH2, PH5
39	PS: NVVDD PH9
40	PS: NVVDD PH7
41	PS: NVVDD PH10, PH8
42	PS: OVRS_INPUT POWER BALANCE
43	PS: RDT3_12V & 3V3_A Switcher
44	PS: INPUTS, FILTERING and MONITORING
45	PS: PEX_12V, PEX_3V3 AND A3V3_AUX
46	PS: STEERING, UPB, HOT UNPLUG
47	SEQ: 5V, 1V8, 3V3_SEQ
48	SEQ: NVVDD, PEX, FBVDDQ ENABLE
49	SEQ: MISC
50	SEQ: VOLTAGE MONITOR
51	FAN & LED
52	PS:OVRM_PWR_SENSE
53	MECH
54	PTC

ASSEMBLY	<ASSEMBLY_DESCRIPTION>
PAGE DETAIL	Table of Contents

ALL NVIDIA DESIGN SPECIFICATIONS, REFERENCE SPECIFICATIONS, REFERENCE BOARDS, FILES, DRAWINGS, DIAGNOSTICS, LISTS AND OTHER DOCUMENTS OR INFORMATION (TOGETHER AND SEPARATELY, 'MATERIALS') ARE BEING PROVIDED 'AS IS'. THE MATERIALS MAY CONTAIN KNOWN AND UNKNOWN VIOLATIONS OR DEVIATIONS OF INDUSTRY STANDARDS AND SPECIFICATIONS. NVIDIA MAKES NO WARRANTIES, EXPRESSED, IMPLIED, STATUTORY OR OTHERWISE WITH RESPECT TO THE MATERIALS OR OTHERWISE, AND EXPRESSLY DISCLAIMS ALL IMPLIED WARRANTIES INCLUDING, WITHOUT LIMITATION, THE WARRANTIES OF DESIGN, OF NONINFRINGEMENT, MERCHANTABILITY OR FITNESS FOR A PARTICULAR PURPOSE, OR ARISING FROM A COURSE OF DEALING, TRADE USAGE, TRADE PRACTICE, OR INDUSTRY STANDARDS

RD Center
Colorful Co.,Ltd
深圳市七彩虹科技发展有限公司

Size	Document Number	Rev
Custom	GA104H8-E10	A
Date:	Monday, July 13, 2020	Sheet 1 of 57

Page2: Block Diagram

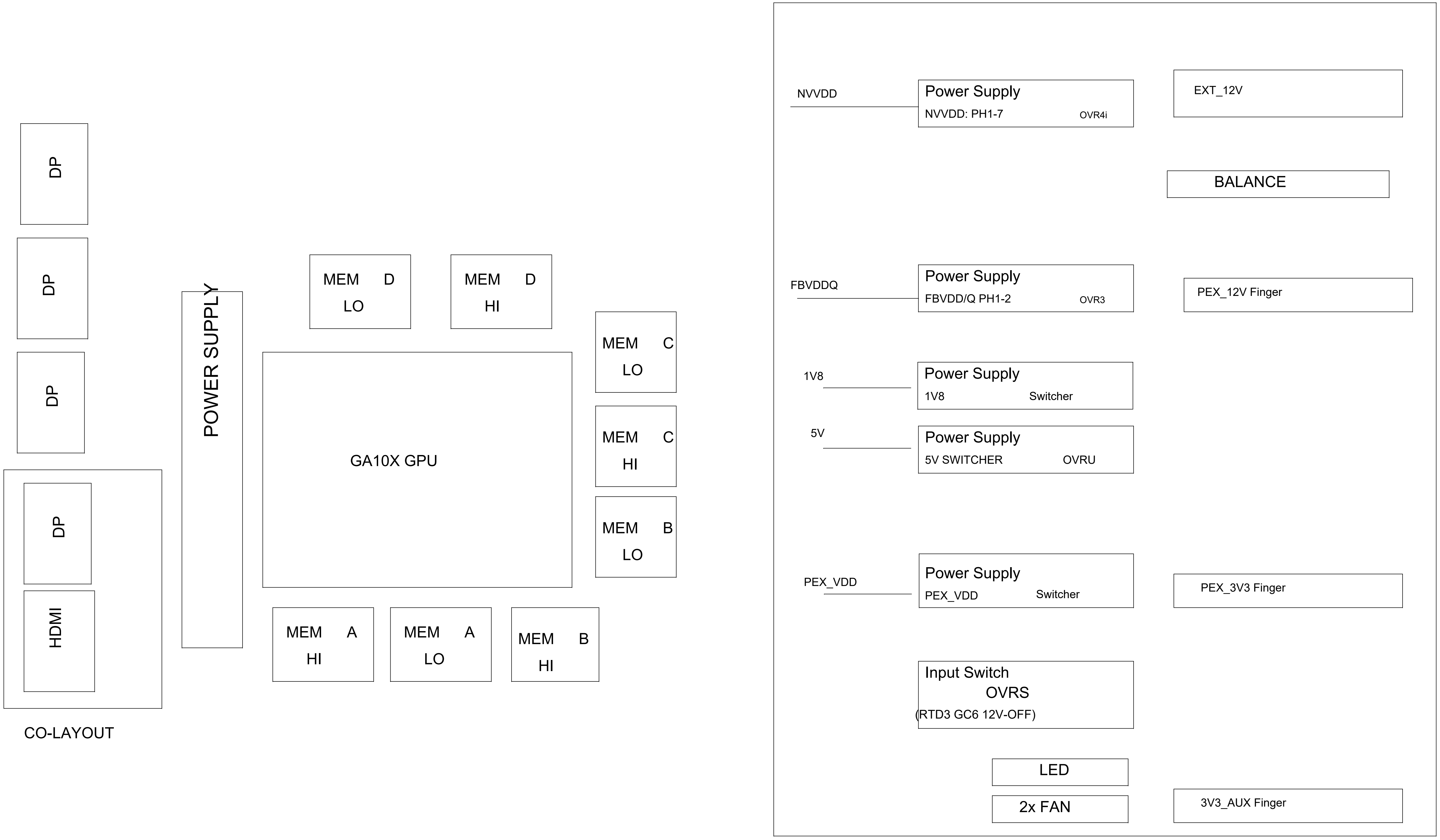
DP
DP
DP
DP
HDMI
CO-LAYOUT
POWER SUPPLY
MEM D LO
MEM D HI
GA10X GPU
MEM C LO
MEM C HI
MEM B LO
MEM A HI
MEM A LO
MEM B HI
NVVDD
Power Supply
NVVDD: PH1-7
OVR4i
EXT_12V
BALANCE
FBVDDQ
Power Supply
FBVDD/Q PH1-2
OVR3
PEX_12V Finger
1V8
Power Supply
1V8
Switcher
5V
Power Supply
5V SWITCHER
OVRU
PEX_VDD
Power Supply
PEX_VDD
Switcher
PEX_3V3 Finger
Input Switch
OVRS
(RTD3 GC6 12V-OFF)
LED
2x FAN
3V3_AUX Finger

ASSEMBLY	<ASSEMBLY_DESCRIPTION>
PAGE DETAIL	Block Diagram

ALL NVIDIA DESIGN SPECIFICATIONS, REFERENCE SPECIFICATIONS, REFERENCE BOARDS, FILES, DRAWINGS, DIAGNOSTICS, LISTS AND OTHER DOCUMENTS OR INFORMATION (TOGETHER AND SEPARATELY, 'MATERIALS') ARE BEING PROVIDED 'AS IS'. THE MATERIALS MAY CONTAIN KNOWN AND UNKNOWN VIOLATIONS OR DEVIATIONS OF INDUSTRY STANDARDS AND SPECIFICATIONS. NVIDIA MAKES NO WARRANTIES, EXPRESSED, IMPLIED, STATUTORY OR OTHERWISE WITH RESPECT TO THE MATERIALS OR OTHERWISE, AND EXPRESSLY DISCLAIMS ALL IMPLIED WARRANTIES INCLUDING, WITHOUT LIMITATION, THE WARRANTIES OF DESIGN, OF NONINFRINGEMENT, MERCHANTABILITY OR FITNESS FOR A PARTICULAR PURPOSE, OR ARISING FROM A COURSE OF DEALING, TRADE USAGE, TRADE PRACTICE, OR INDUSTRY STANDARDS

RD Center
Colorful Co.,Ltd
深圳市七彩虹科技发展有限公司

Size	Document Number	Rev
Custom	GA104H8-E10	A

Date: Monday, July 13, 2020
Sheet 2 of 57

Page3: PCI Express

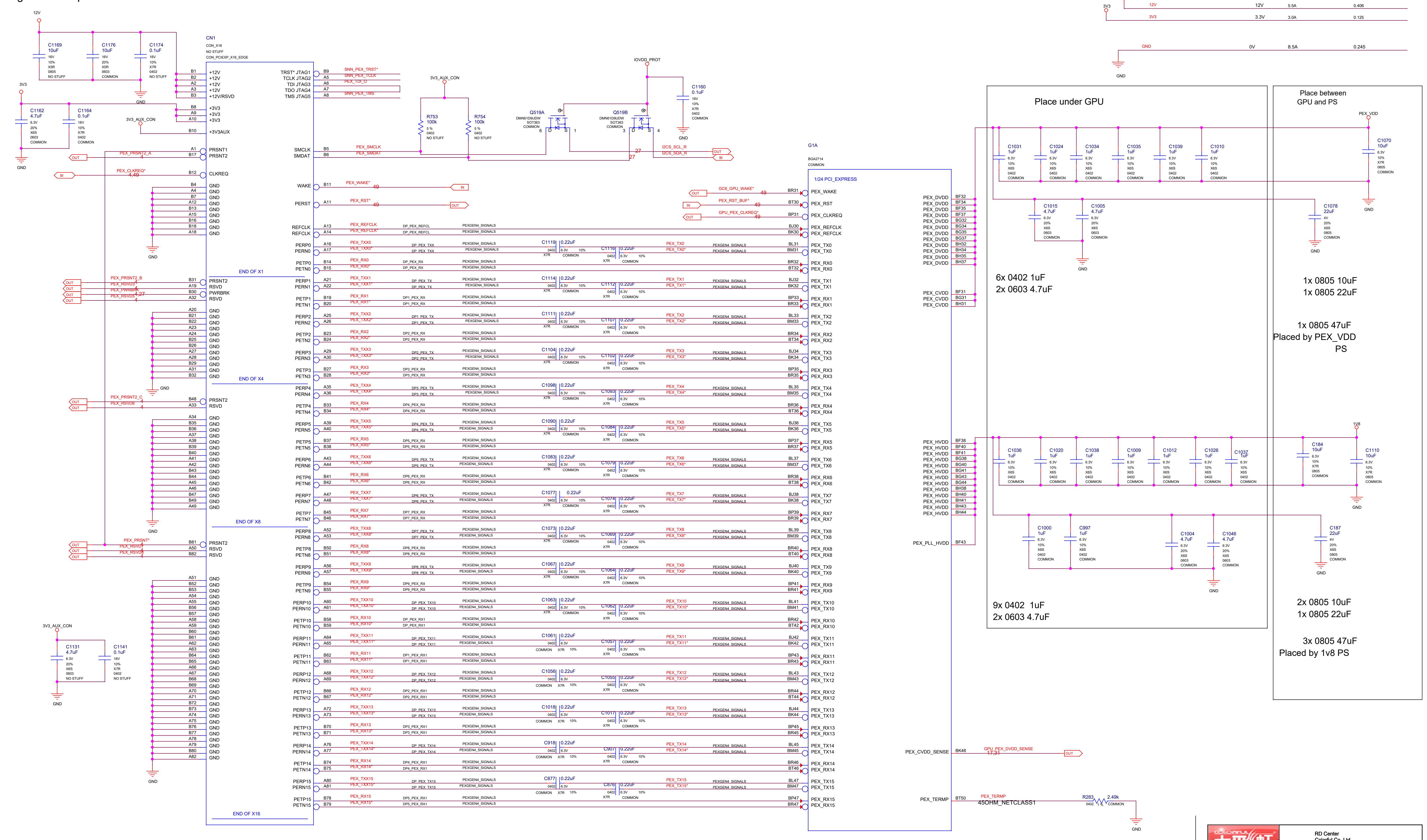
NET
VOLTAGE
MAX_CURRENT
MIN_WIDTH
12V 12V 5.5A 0.406
3V3 3.3V 3.0A 0.125
GND 0V 8.5A 0.245
CN1
CON_X16
NO STUFF
CON_PCIEXP_X16_EDGE
+12V
+12V/RSVD
+3V3
+3V3AUX
PRSNT1
PRSNT2
CLKREQ
GND
TRST* JTAG1
TCLK JTAG2
TDI JTAG3
TDO JTAG4
TMS JTAG5
SMCLK
SMDAT
WAKE
PERST
REFCLK
PERP0
PERN0
PETP0
PETN0
RSVD
PWRBRK
END OF X1
END OF X4
END OF X8
END OF X16
C1169 10uF
C1176 10uF
C1174 0.1uF
C1162 4.7uF
C1164 0.1uF
C1131 4.7uF
C1141 0.1uF
3V3_AUX_CON
IOVDD_PROT
R753 100k
R754 100k
Q519A
Q519B
DMN61D9UDW
SOT363
C1160 0.1uF
I2CS_SCL_R
I2CS_SDA_R
PEX_SMCLK
PEX_SMDAT
PEX_WAKE*
PEX_RST*
PEX_REFCLK
PEX_REFCLK*
PEXGEN4_SIGNALS
0.22uF
G1A
BGA2714
COMMON
1/24 PCI_EXPRESS
PEX_WAKE
PEX_RST
PEX_CLKREQ
PEX_REFCLK
PEX_TX0 … PEX_TX15
PEX_RX0 … PEX_RX15
PEX_DVDD
PEX_CVDD
PEX_HVDD
PEX_PLL_HVDD
PEX_CVDD_SENSE
PEX_TERMP
GC6_GPU_WAKE*
PEX_RST_BUF*
GPU_PEX_CLKREQ*
GPU_PEX_DVDD_SENSE
45OHM_NETCLASS1
R283 2.49k
PEX_VDD
1V8
Place under GPU
6x 0402 1uF
2x 0603 4.7uF
9x 0402 1uF
2x 0603 4.7uF
Place between
GPU and PS
1x 0805 10uF
1x 0805 22uF
1x 0805 47uF
Placed by PEX_VDD
PS
2x 0805 10uF
1x 0805 22uF
3x 0805 47uF
Placed by 1v8 PS

ASSEMBLY	<ASSEMBLY_DESCRIPTION>
PAGE DETAIL	PCI Express

ALL NVIDIA DESIGN SPECIFICATIONS, REFERENCE SPECIFICATIONS, REFERENCE BOARDS, FILES, DRAWINGS, DIAGNOSTICS, LISTS AND OTHER DOCUMENTS OR INFORMATION (TOGETHER AND SEPARATELY, 'MATERIALS') ARE BEING PROVIDED 'AS IS'. THE MATERIALS MAY CONTAIN KNOWN AND UNKNOWN VIOLATIONS OR DEVIATIONS OF INDUSTRY STANDARDS AND SPECIFICATIONS. NVIDIA MAKES NO WARRANTIES, EXPRESSED, IMPLIED, STATUTORY OR OTHERWISE WITH RESPECT TO THE MATERIALS OR OTHER DEVICES, AND EXPRESSLY DISCLAIMS ALL IMPLIED WARRANTIES INCLUDING, WITHOUT LIMITATION, THE WARRANTIES OF DESIGN, OF NONINFRINGEMENT, MERCHANTABILITY OR FITNESS FOR A PARTICULAR PURPOSE, OR ARISING FROM A COURSE OF DEALING, TRADE USAGE, TRADE PRACTICE, OR INDUSTRY STANDARDS.

RD Center
Colorful Co.,Ltd
深圳市七彩虹科技发展有限公司

Size	Document Number	Rev
Custom	GA104H8-E10	A
Date: Monday, July 13, 2020	Sheet 3 of 57	

Page4: PCIE GEN4 RC TERMINATIONS

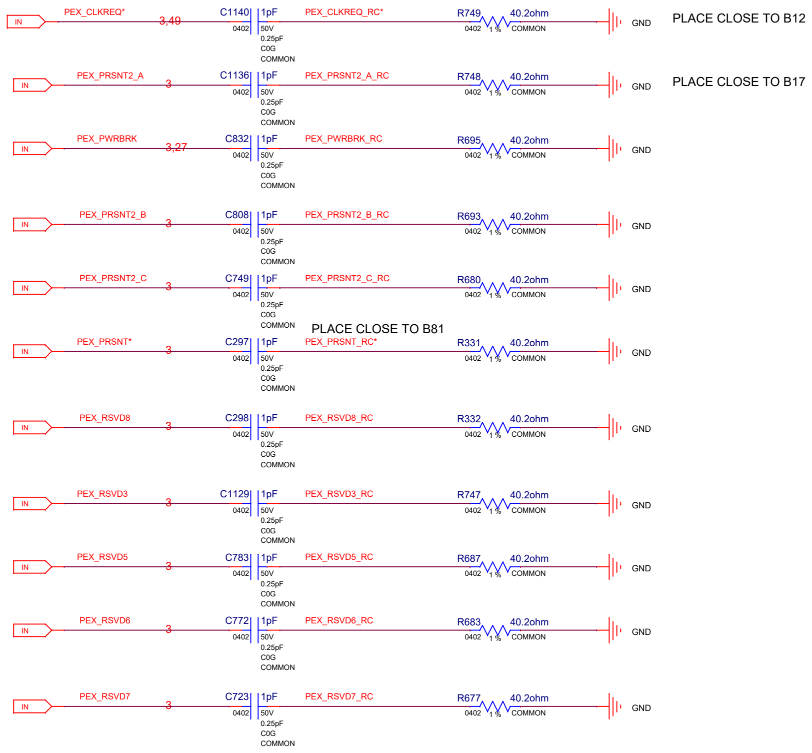
IN
PEX_CLKREQ*
3,49
C1140
0402
1pF
50V
0.25pF
C0G
COMMON
PEX_CLKREQ_RC*
R749
0402
1 %
40.2ohm
COMMON
GND
PLACE CLOSE TO B12
IN
PEX_PRSNT2_A
3
C1136
0402
1pF
50V
0.25pF
C0G
COMMON
PEX_PRSNT2_A_RC
R748
0402
1 %
40.2ohm
COMMON
GND
PLACE CLOSE TO B17
IN
PEX_PWRBRK
3,27
C832
0402
1pF
50V
0.25pF
C0G
COMMON
PEX_PWRBRK_RC
R695
0402
1 %
40.2ohm
COMMON
GND
IN
PEX_PRSNT2_B
3
C808
0402
1pF
50V
0.25pF
C0G
COMMON
PEX_PRSNT2_B_RC
R693
0402
1 %
40.2ohm
COMMON
GND
IN
PEX_PRSNT2_C
3
C749
0402
1pF
50V
0.25pF
C0G
COMMON
PEX_PRSNT2_C_RC
R680
0402
1 %
40.2ohm
COMMON
GND
PLACE CLOSE TO B81
IN
PEX_PRSNT*
3
C297
0402
1pF
50V
0.25pF
C0G
COMMON
PEX_PRSNT_RC*
R331
0402
1 %
40.2ohm
COMMON
GND
IN
PEX_RSVD8
3
C298
0402
1pF
50V
0.25pF
C0G
COMMON
PEX_RSVD8_RC
R332
0402
1 %
40.2ohm
COMMON
GND
IN
PEX_RSVD3
3
C1129
0402
1pF
50V
0.25pF
C0G
COMMON
PEX_RSVD3_RC
R747
0402
1 %
40.2ohm
COMMON
GND
IN
PEX_RSVD5
3
C783
0402
1pF
50V
0.25pF
C0G
COMMON
PEX_RSVD5_RC
R687
0402
1 %
40.2ohm
COMMON
GND
IN
PEX_RSVD6
3
C772
0402
1pF
50V
0.25pF
C0G
COMMON
PEX_RSVD6_RC
R683
0402
1 %
40.2ohm
COMMON
GND
IN
PEX_RSVD7
3
C723
0402
1pF
50V
0.25pF
C0G
COMMON
PEX_RSVD7_RC
R677
0402
1 %
40.2ohm
COMMON
GND

ASSEMBLY	<ASSEMBLY_DESCRIPTION>
PAGE DETAIL	PCIE GEN4 RC TERMINATIONS

ALL NVIDIA DESIGN SPECIFICATIONS, REFERENCE SPECIFICATIONS, REFERENCE BOARDS, FILES, DRAWINGS, DIAGNOSTICS, LISTS AND OTHER DOCUMENTS OR INFORMATION (TOGETHER AND SEPARATELY, 'MATERIALS') ARE BEING PROVIDED 'AS IS'. THE MATERIALS MAY CONTAIN KNOWN AND UNKNOWN VIOLATIONS OR DEVIATIONS OF INDUSTRY STANDARDS AND SPECIFICATIONS. NVIDIA MAKES NO WARRANTIES, EXPRESSED, IMPLIED, STATUTORY OR OTHERWISE WITH RESPECT TO THE MATERIALS OR OTHERWISE, AND EXPRESSLY DISCLAIMS ALL IMPLIED WARRANTIES INCLUDING, WITHOUT LIMITATION, THE WARRANTIES OF DESIGN, OF NONINFRINGEMENT, MERCHANTABILITY OR FITNESS FOR A PARTICULAR PURPOSE, OR ARISING FROM A COURSE OF DEALING, TRADE USAGE, TRADE PRACTICE, OR INDUSTRY STANDARDS.

RD Center
Colorful Co.,Ltd
深圳市七彩虹科技发展有限公司

Size	Document Number	Rev
Custom	GA104H8-E10	A

Date: Monday, July 13, 2020 Sheet 4 of 57

Page5: MEMORY: GPU Partition A/B

//syseng/Projects/GA1xx/GA1XX_CMD-Mapping.xlsx

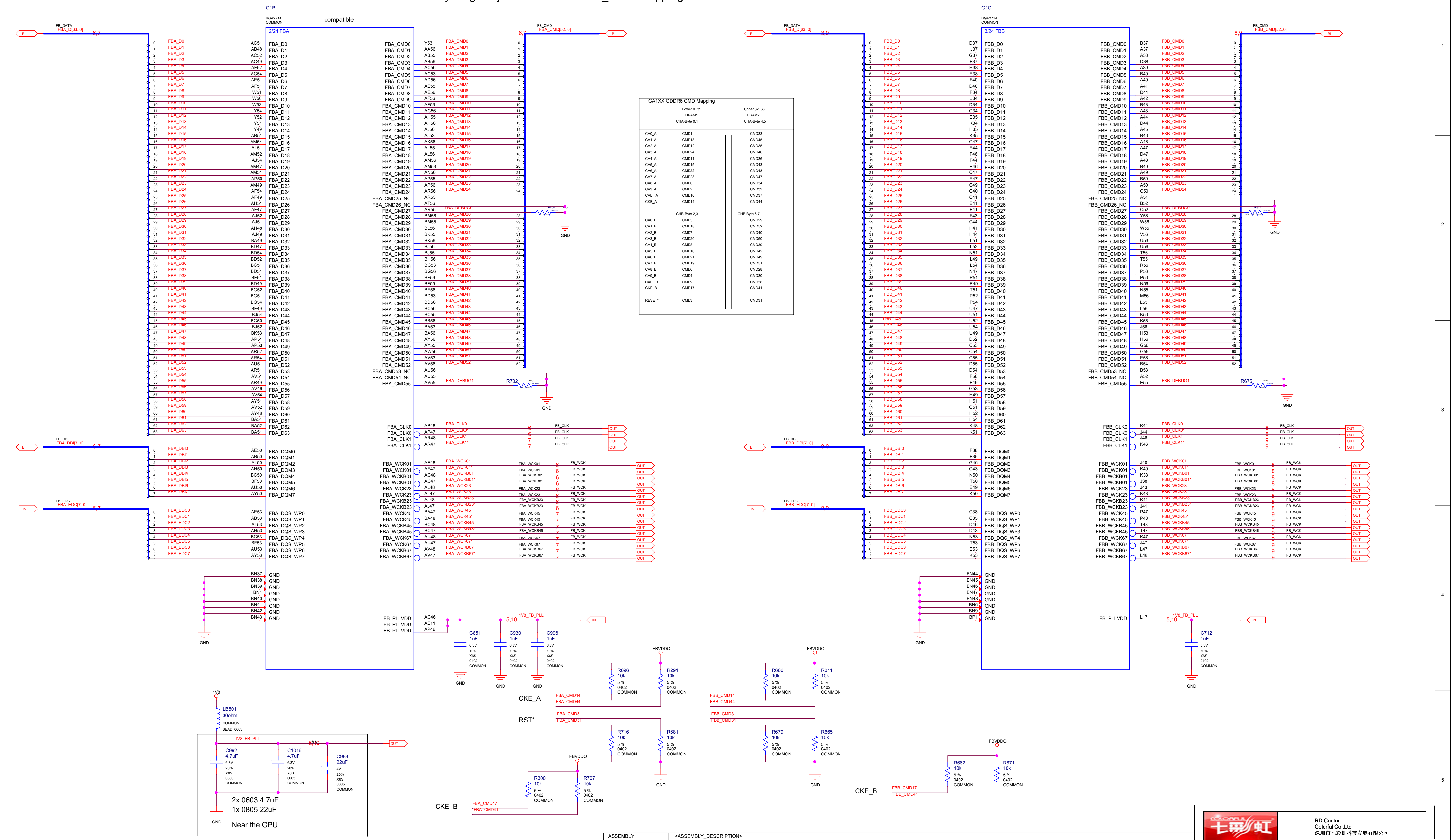
G1B
BGA2714
COMMON
compatible
2/24 FBA
FB_DATA
FBA_D[63..0]
FB_CMD
FBA_CMD[52..0]
FB_DBI
FBA_DBI[7..0]
FB_EDC
FBA_EDC[7..0]
FBA_PLLVDD
1V8_FB_PLL
C851 1uF
C930 1uF
C996 1uF
GND
R702
FBA_DEBUG0
FBA_DEBUG1
FBA_CLK0
FBA_CLK1
FBA_WCK01
FBA_WCKB01
FBA_WCK23
FBA_WCKB23
FBA_WCK45
FBA_WCKB45
FBA_WCK67
FBA_WCKB67
G1C
BGA2714
COMMON
3/24 FBB
FBB_D[63..0]
FBB_CMD[52..0]
FBB_DBI[7..0]
FBB_EDC[7..0]
FBB_PLLVDD
C712 1uF
R675
FBVDDQ
R696 10k
R291 10k
R666 10k
R311 10k
R716 10k
R681 10k
R679 10k
R665 10k
R300 10k
R707 10k
R662 10k
R671 10k
CKE_A
RST*
CKE_B
FBA_CMD14
FBA_CMD44
FBA_CMD3
FBA_CMD31
FBB_CMD14
FBB_CMD44
FBB_CMD3
FBB_CMD31
FBA_CMD17
FBA_CMD41
FBB_CMD17
FBB_CMD41
1V8
LB501
30ohm
COMMON
BEAD_0603
C992 4.7uF
C1016 4.7uF
C988 22uF
2x 0603 4.7uF
1x 0805 22uF
Near the GPU

GA1XX GDDR6 CMD Mapping

	Lower 0..31 DRAM1 CHA-Byte 0,1	Upper 32..63 DRAM2 CHA-Byte 4,5
CA0_A	CMD1	CMD33
CA1_A	CMD13	CMD45
CA2_A	CMD12	CMD35
CA3_A	CMD24	CMD46
CA4_A	CMD11	CMD36
CA5_A	CMD15	CMD43
CA6_A	CMD22	CMD48
CA7_A	CMD23	CMD47
CA8_A	CMD0	CMD34
CA9_A	CMD2	CMD32
CABI_A	CMD10	CMD37
CKE_A	CMD14	CMD44
	CHB-Byte 2,3	CHB-Byte 6,7
CA0_B	CMD5	CMD29
CA1_B	CMD18	CMD52
CA2_B	CMD7	CMD40
CA3_B	CMD20	CMD50
CA4_B	CMD8	CMD39
CA5_B	CMD16	CMD42
CA6_B	CMD21	CMD49
CA7_B	CMD19	CMD51
CA8_B	CMD6	CMD28
CA9_B	CMD4	CMD30
CABI_B	CMD9	CMD38
CKE_B	CMD17	CMD41
RESET*	CMD3	CMD31

ASSEMBLY	<ASSEMBLY_DESCRIPTION>
PAGE DETAIL	MEMORY: GPU FB_AB

ALL NVIDIA DESIGN SPECIFICATIONS, REFERENCE SPECIFICATIONS, REFERENCE BOARDS, FILES, DRAWINGS, DIAGNOSTICS, LISTS AND OTHER DOCUMENTS OR INFORMATION (TOGETHER AND SEPARATELY, 'MATERIALS') ARE BEING PROVIDED 'AS IS'. THE MATERIALS MAY CONTAIN KNOWN AND UNKNOWN VIOLATIONS OR DEVIATIONS OF INDUSTRY STANDARDS AND SPECIFICATIONS. NVIDIA MAKES NO WARRANTIES, EXPRESSED, IMPLIED, STATUTORY OR OTHERWISE WITH RESPECT TO THE MATERIALS OR OTHERWISE, AND EXPRESSLY DISCLAIMS ALL IMPLIED WARRANTIES INCLUDING, WITHOUT LIMITATION, THE WARRANTIES OF DESIGN, OF NONINFRINGEMENT, MERCHANTABILITY OR FITNESS FOR A PARTICULAR PURPOSE, OR ARISING FROM A COURSE OF DEALING, TRADE USAGE, TRADE PRACTICE, OR INDUSTRY STANDARDS.

RD Center
Colorful Co.,Ltd
深圳市七彩虹科技发展有限公司

Size	Document Number	Rev
Custom	GA104H8-E10	A

Date: Monday, July 13, 2020 Sheet 5 of 57

Page6: MEMORY: FBA Partition 31..0

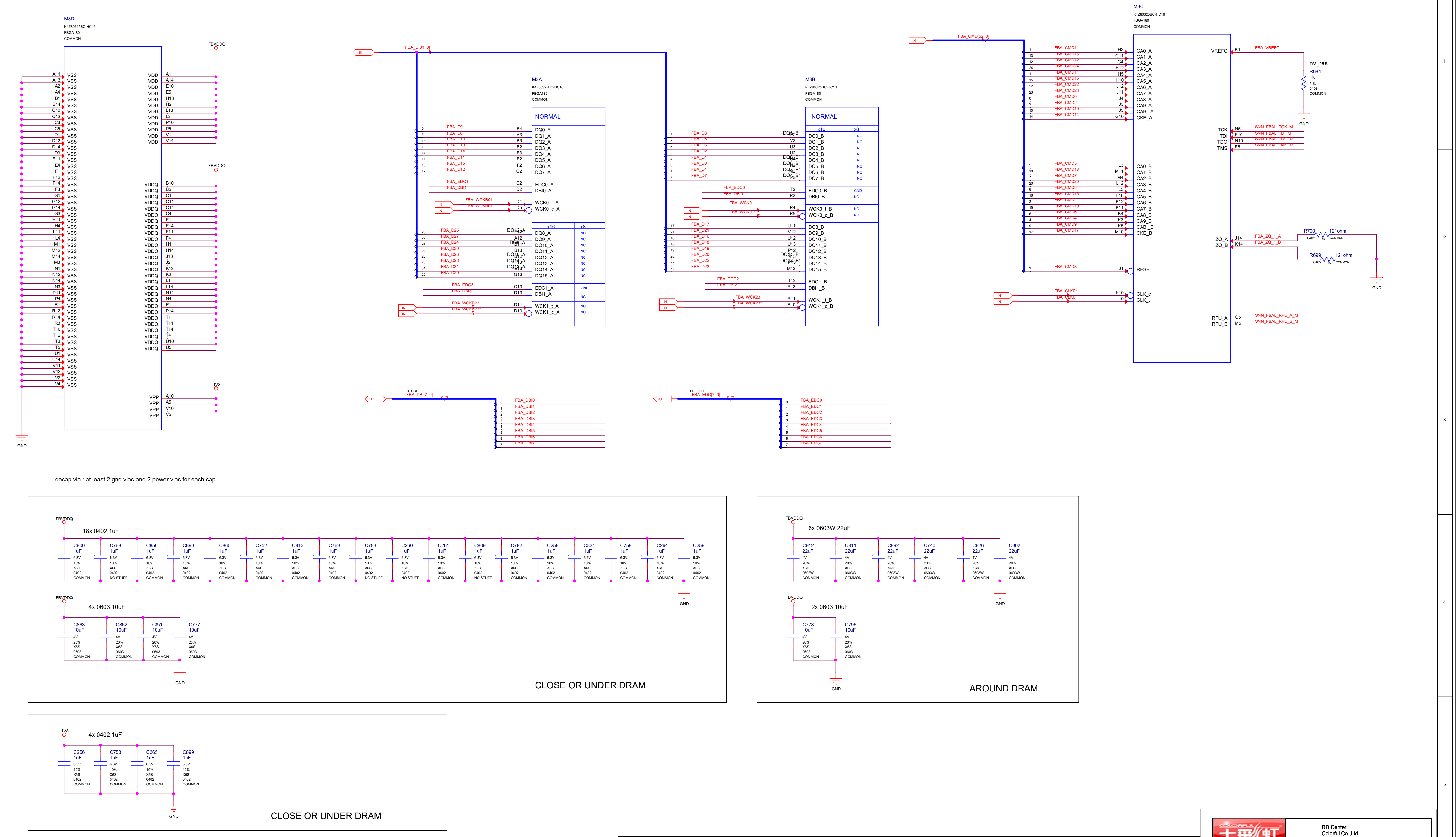
M3D
K4Z80325BC-HC16
FBGA180
COMMON
FBVDDQ
1V8
GND
M3A
NORMAL
M3B
M3C
FBA_D[31..0]
FBA_CMD[52..0]
FBA_DBI[7..0]
FBA_EDC[7..0]
VREFC
FBA_VREFC
nv_res
R684
1k
TCK
TDI
TDO
TMS
RESET
CLK_c
CLK_t
ZQ_A
ZQ_B
R700
R699
121ohm
RFU_A
RFU_B
18x 0402 1uF
4x 0603 10uF
6x 0603W 22uF
2x 0603 10uF
4x 0402 1uF
CLOSE OR UNDER DRAM
AROUND DRAM

decap via : at least 2 gnd vias and 2 power vias for each cap

ASSEMBLY	<ASSEMBLY_DESCRIPTION>
PAGE DETAIL	MEMORY: FBA[31:0]

ALL NVIDIA DESIGN SPECIFICATIONS, REFERENCE SPECIFICATIONS, REFERENCE BOARDS, FILES, DRAWINGS, DIAGNOSTICS, LISTS AND OTHER DOCUMENTS OR INFORMATION (TOGETHER AND SEPARATELY, 'MATERIALS') ARE BEING PROVIDED 'AS IS'. THE MATERIALS MAY CONTAIN KNOWN AND UNKNOWN VIOLATIONS OR DEVIATIONS OF INDUSTRY STANDARDS AND SPECIFICATIONS. NVIDIA MAKES NO WARRANTIES, EXPRESSED, IMPLIED, STATUTORY OR OTHERWISE WITH RESPECT TO THE MATERIALS OR OTHERWISE, AND EXPRESSLY DISCLAIMS ALL IMPLIED WARRANTIES INCLUDING, WITHOUT LIMITATION, THE WARRANTIES OF DESIGN, OF NONINFRINGEMENT, MERCHANTABILITY OR FITNESS FOR A PARTICULAR PURPOSE, OR ARISING FROM A COURSE OF DEALING, TRADE USAGE, TRADE PRACTICE, OR INDUSTRY STANDARDS.

RD Center
Colorful Co.,Ltd
深圳市七彩虹科技发展有限公司

Size	Document Number	Rev
Custom	GA104H8-E10	A
Date:	Monday, July 13, 2020	Sheet 6 of 57

Page7: MEMORY: FBA Partition 63..32

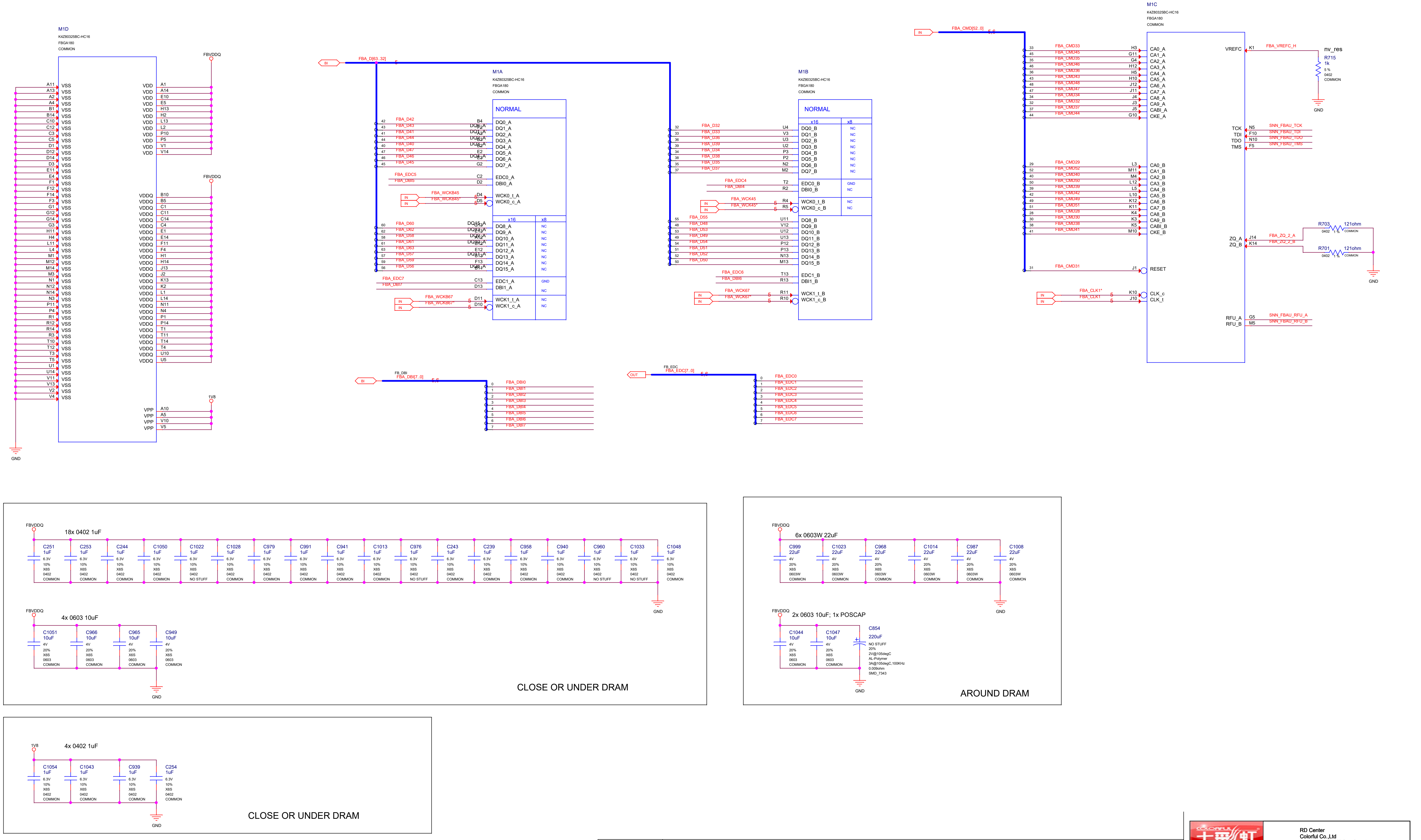

M1D
K4Z80325BC-HC16
FBGA180
COMMON
FBVDDQ
1V8
GND
VSS
VDD
VDDQ
VPP
FBA_D[63..32]
M1A
NORMAL
x16
x8
EDC0_A
DBI0_A
WCK0_t_A
WCK0_c_A
EDC1_A
DBI1_A
WCK1_t_A
WCK1_c_A
FBA_WCKB45
FBA_WCKB67
M1B
EDC0_B
DBI0_B
WCK0_t_B
WCK0_c_B
EDC1_B
DBI1_B
WCK1_t_B
WCK1_c_B
FBA_WCK45
FBA_WCK67
M1C
FBA_CMD[52..0]
VREFC
FBA_VREFC_H
nv_res
R715
1k
TCK
TDI
TDO
TMS
SNN_FBAU_TCK
SNN_FBAU_TDI
SNN_FBAU_TDO
SNN_FBAU_TMS
ZQ_A
ZQ_B
R703
R701
121ohm
RESET
CLK_c
CLK_t
FBA_CLK1*
FBA_CLK1
RFU_A
RFU_B
SNN_FBAU_RFU_A
SNN_FBAU_RFU_B
FB_DBI
FBA_DBI[7..0]
FB_EDC
FBA_EDC[7..0]
18x 0402 1uF
4x 0603 10uF
CLOSE OR UNDER DRAM
6x 0603W 22uF
2x 0603 10uF; 1x POSCAP
C854
220uF
AROUND DRAM
4x 0402 1uF
CLOSE OR UNDER DRAM

ASSEMBLY	<ASSEMBLY_DESCRIPTION>
PAGE DETAIL	MEMORY: FBA[63:32]

ALL NVIDIA DESIGN SPECIFICATIONS, REFERENCE SPECIFICATIONS, REFERENCE BOARDS, FILES, DRAWINGS, DIAGNOSTICS, LISTS AND OTHER DOCUMENTS OR INFORMATION (TOGETHER AND SEPARATELY, 'MATERIALS') ARE BEING PROVIDED 'AS IS'. THE MATERIALS MAY CONTAIN KNOWN AND UNKNOWN VIOLATIONS OR DEVIATIONS OF INDUSTRY STANDARDS AND SPECIFICATIONS. NVIDIA MAKES NO WARRANTIES, EXPRESSED, IMPLIED, STATUTORY OR OTHERWISE WITH RESPECT TO THE MATERIALS OR OTHERWISE, AND EXPRESSLY DISCLAIMS ALL IMPLIED WARRANTIES INCLUDING, WITHOUT LIMITATION, THE WARRANTIES OF DESIGN, OF NONINFRINGEMENT, MERCHANTABILITY OR FITNESS FOR A PARTICULAR PURPOSE, OR ARISING FROM A COURSE OF DEALING, TRADE USAGE, TRADE PRACTICE, OR INDUSTRY STANDARDS.

RD Center
Colorful Co.,Ltd
深圳市七彩虹科技发展有限公司

Size	Document Number	Rev
Custom	GA104H8-E10	A

Date: Monday, July 13, 2020 Sheet 7 of 57

Page8: MEMORY: FBB Partition 31..0

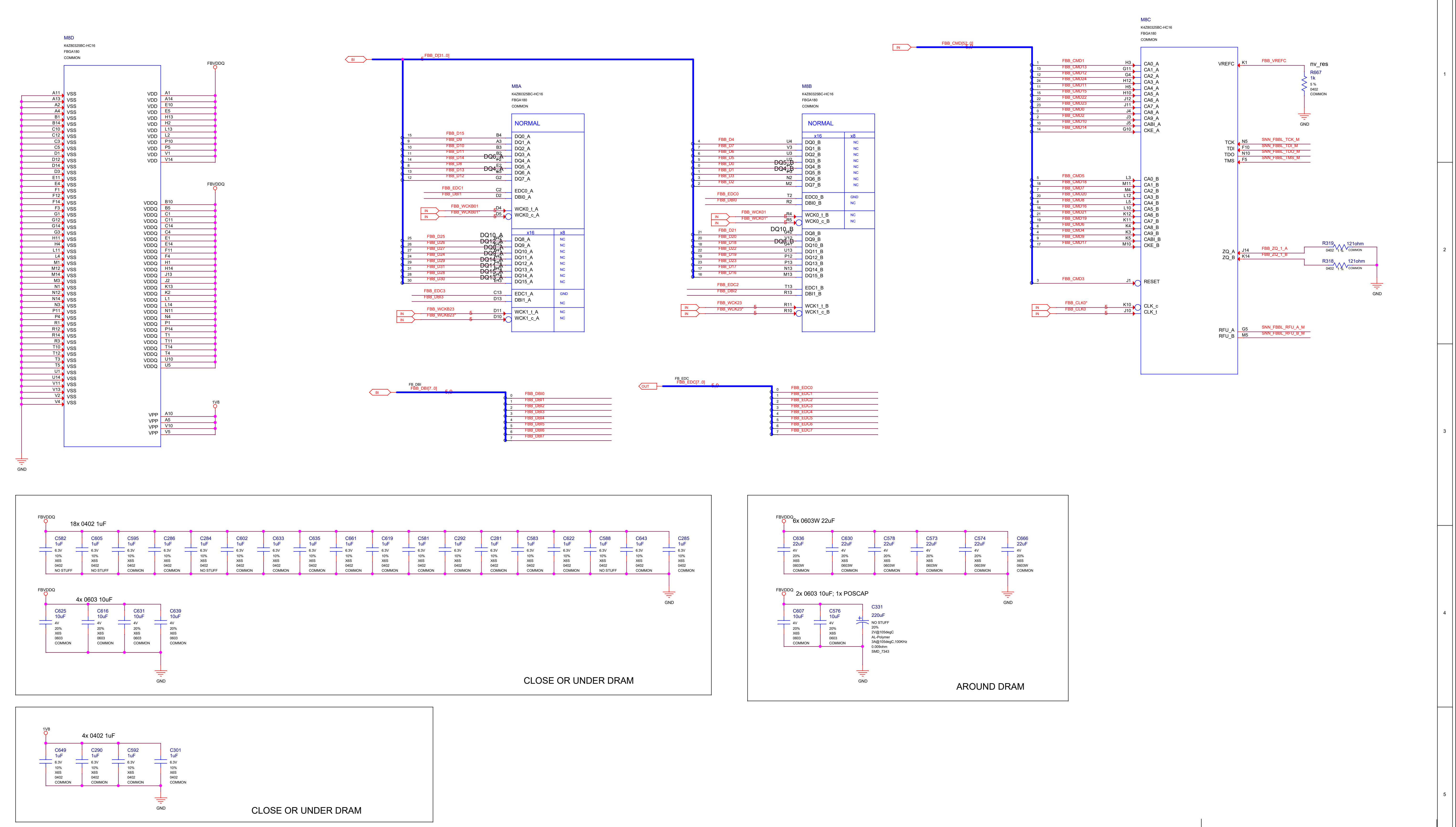

M8D
K4Z80325BC-HC16
FBGA180
COMMON
FBVDDQ
VSS
VDD
VDDQ
VPP
1V8
GND
M8A
K4Z80325BC-HC16
NORMAL
FBB_D[31..0]
DQ0_A
DQ7_A
EDC0_A
DBI0_A
WCK0_t_A
WCK0_c_A
x16
x8
DQ8_A
DQ15_A
EDC1_A
DBI1_A
WCK1_t_A
WCK1_c_A
FBB_WCKB01
FBB_WCKB23
M8B
K4Z80325BC-HC16
NORMAL
DQ0_B
DQ7_B
EDC0_B
DBI0_B
WCK0_t_B
WCK0_c_B
DQ8_B
DQ15_B
EDC1_B
DBI1_B
WCK1_t_B
WCK1_c_B
FB_DBI
FBB_DBI[7..0]
FB_EDC
FBB_EDC[7..0]
M8C
K4Z80325BC-HC16
FBB_CMD[52..0]
CA0_A
CKE_A
CA0_B
CKE_B
RESET
CLK_c
CLK_t
VREFC
FBB_VREFC
nv_res
R667
1k
TCK
TDI
TDO
TMS
ZQ_A
ZQ_B
R319
R318
121ohm
RFU_A
RFU_B
18x 0402 1uF
4x 0603 10uF
CLOSE OR UNDER DRAM
6x 0603W 22uF
2x 0603 10uF; 1x POSCAP
C331
220uF
AROUND DRAM
4x 0402 1uF
CLOSE OR UNDER DRAM

ASSEMBLY	<ASSEMBLY_DESCRIPTION>	
PAGE DETAIL	MEMORY: FBB[31:0]	

ALL NVIDIA DESIGN SPECIFICATIONS, REFERENCE SPECIFICATIONS, REFERENCE BOARDS, FILES, DRAWINGS, DIAGNOSTICS, LISTS AND OTHER DOCUMENTS OR INFORMATION (TOGETHER AND SEPARATELY, 'MATERIALS') ARE BEING PROVIDED 'AS IS'. THE MATERIALS MAY CONTAIN KNOWN AND UNKNOWN VIOLATIONS OR DEVIATIONS OF INDUSTRY STANDARDS AND SPECIFICATIONS. NVIDIA MAKES NO WARRANTIES, EXPRESSED, IMPLIED, STATUTORY OR OTHERWISE WITH RESPECT TO THE MATERIALS OR OTHERWISE, AND EXPRESSLY DISCLAIMS ALL IMPLIED WARRANTIES INCLUDING, WITHOUT LIMITATION, THE WARRANTIES OF DESIGN, OF NONINFRINGEMENT, MERCHANTABILITY OR FITNESS FOR A PARTICULAR PURPOSE, OR ARISING FROM A COURSE OF DEALING, TRADE USAGE, TRADE PRACTICE, OR INDUSTRY STANDARDS.

RD Center
Colorful Co.,Ltd
深圳市七彩虹科技发展有限公司

Size	Document Number	Rev
Custom	GA104H8-E10	A
Date: Tuesday, July 14, 2020	Sheet 8 of 57	

Page9: MEMORY: FBB Partition 63..32

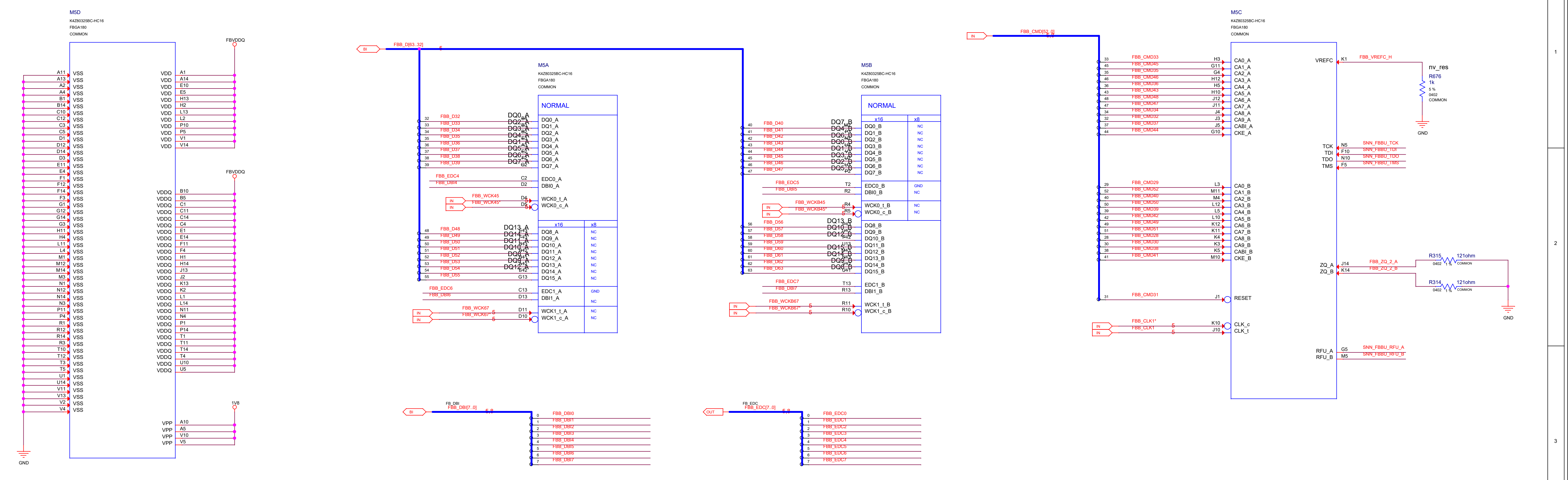
M5D
K4Z80325BC-HC16
FBGA180
COMMON
VSS
VDD
VDDQ
VPP
FBVDDQ
1V8
GND
M5A
NORMAL
x16
x8
FBB_D[63..32]
DQ0_A
DQ7_A
EDC0_A
DBI0_A
WCK0_t_A
WCK0_c_A
DQ8_A
DQ15_A
EDC1_A
DBI1_A
WCK1_t_A
WCK1_c_A
FBB_WCK45
FBB_WCK45*
FBB_WCK67
FBB_WCK67*
M5B
DQ0_B
DQ7_B
EDC0_B
DBI0_B
WCK0_t_B
WCK0_c_B
DQ8_B
DQ15_B
EDC1_B
DBI1_B
WCK1_t_B
WCK1_c_B
FBB_WCKB45
FBB_WCKB45*
FBB_WCKB67
FBB_WCKB67*
NC
GND
FB_DBI
FBB_DBI[7..0]
FB_EDC
FBB_EDC[7..0]
BI
OUT
IN
M5C
FBB_CMD[52..0]
CA0_A
CKE_A
CA0_B
CKE_B
RESET
CLK_c
CLK_t
FBB_CLK1*
FBB_CLK1
VREFC
FBB_VREFC_H
nv_res
R676
1k
TCK
TDI
TDO
TMS
SNN_FBBU_TCK
SNN_FBBU_TDI
SNN_FBBU_TDO
SNN_FBBU_TMS
ZQ_A
ZQ_B
FBB_ZQ_2_A
FBB_ZQ_2_B
R315
R314
121ohm
RFU_A
RFU_B
SNN_FBBU_RFU_A
SNN_FBBU_RFU_B

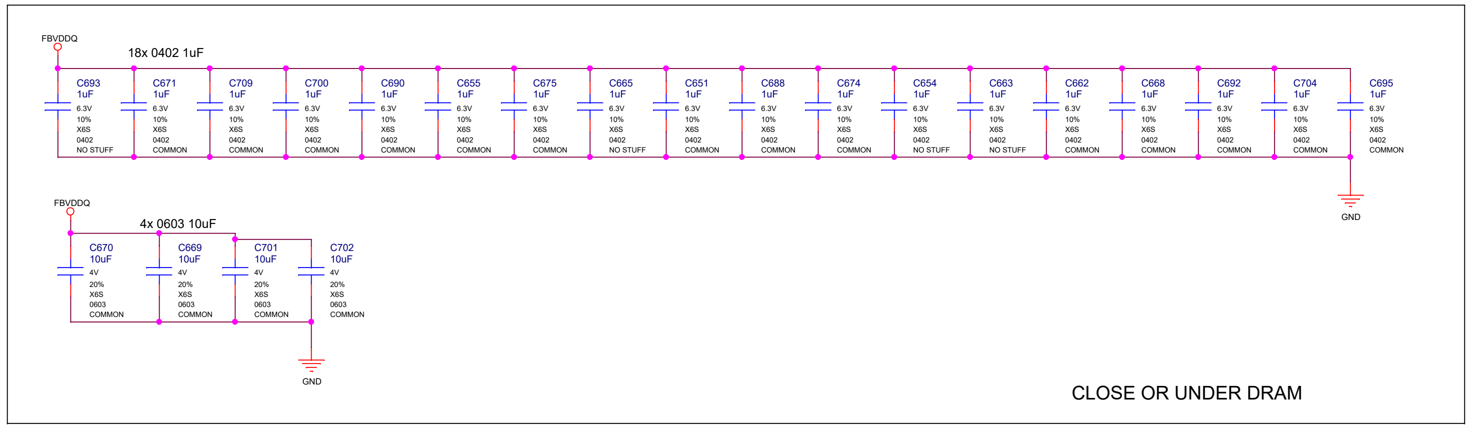
FBVDDQ
18x 0402 1uF
C693
C671
C709
C700
C690
C655
C675
C665
C651
C688
C674
C654
C663
C662
C668
C692
C704
C695
1uF
6.3V
10%
X6S
0402
COMMON
NO STUFF
4x 0603 10uF
C670
C669
C701
C702
10uF
4V
20%
0603
GND
CLOSE OR UNDER DRAM

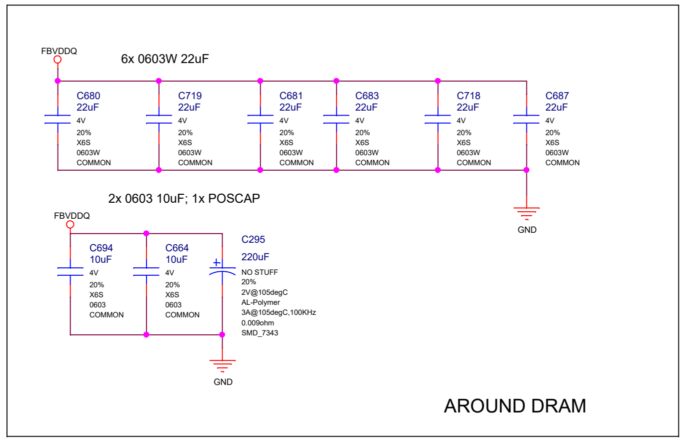
FBVDDQ
6x 0603W 22uF
C680
C719
C681
C683
C718
C687
22uF
4V
20%
X6S
0603W
COMMON
2x 0603 10uF; 1x POSCAP
C694
C664
10uF
C295
220uF
NO STUFF
2V@105degC
AL-Polymer
3A@105degC,100KHz
0.009ohm
SMD_7343
GND
AROUND DRAM

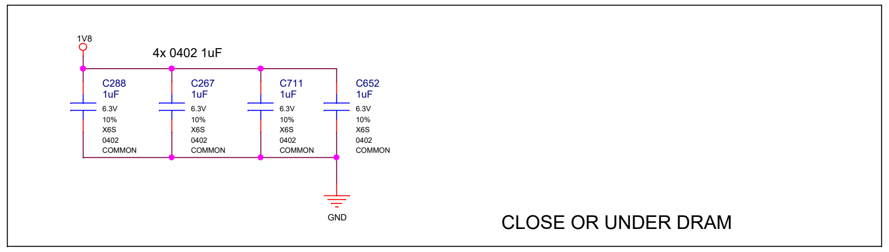
1V8
4x 0402 1uF
C288
C267
C711
C652
1uF
6.3V
10%
X6S
0402
COMMON
GND
CLOSE OR UNDER DRAM

ASSEMBLY	<ASSEMBLY_DESCRIPTION>
PAGE DETAIL	MEMORY: FBB[63:32]

ALL NVIDIA DESIGN SPECIFICATIONS, REFERENCE SPECIFICATIONS, REFERENCE BOARDS, FILES, DRAWINGS, DIAGNOSTICS, LISTS AND OTHER DOCUMENTS OR INFORMATION (TOGETHER AND SEPARATELY, 'MATERIALS') ARE BEING PROVIDED 'AS IS'. THE MATERIALS MAY CONTAIN KNOWN AND UNKNOWN VIOLATIONS OR DEVIATIONS OF INDUSTRY STANDARDS AND SPECIFICATIONS. NVIDIA MAKES NO WARRANTIES, EXPRESSED, IMPLIED, STATUTORY OR OTHERWISE WITH RESPECT TO THE MATERIALS OR OTHERWISE, AND EXPRESSLY DISCLAIMS ALL IMPLIED WARRANTIES INCLUDING, WITHOUT LIMITATION, THE WARRANTIES OF DESIGN, OF NONINFRINGEMENT, MERCHANTABILITY OR FITNESS FOR A PARTICULAR PURPOSE, OR ARISING FROM A COURSE OF DEALING, TRADE USAGE, TRADE PRACTICE, OR INDUSTRY STANDARDS.

RD Center
Colorful Co.,Ltd
深圳市七彩虹科技发展有限公司

Size	Document Number	Rev
Custom	GA104H8-E10	A

Date: Monday, July 13, 2020 Sheet 9 of 57

Page10: MEMORY: GPU Partition C/D

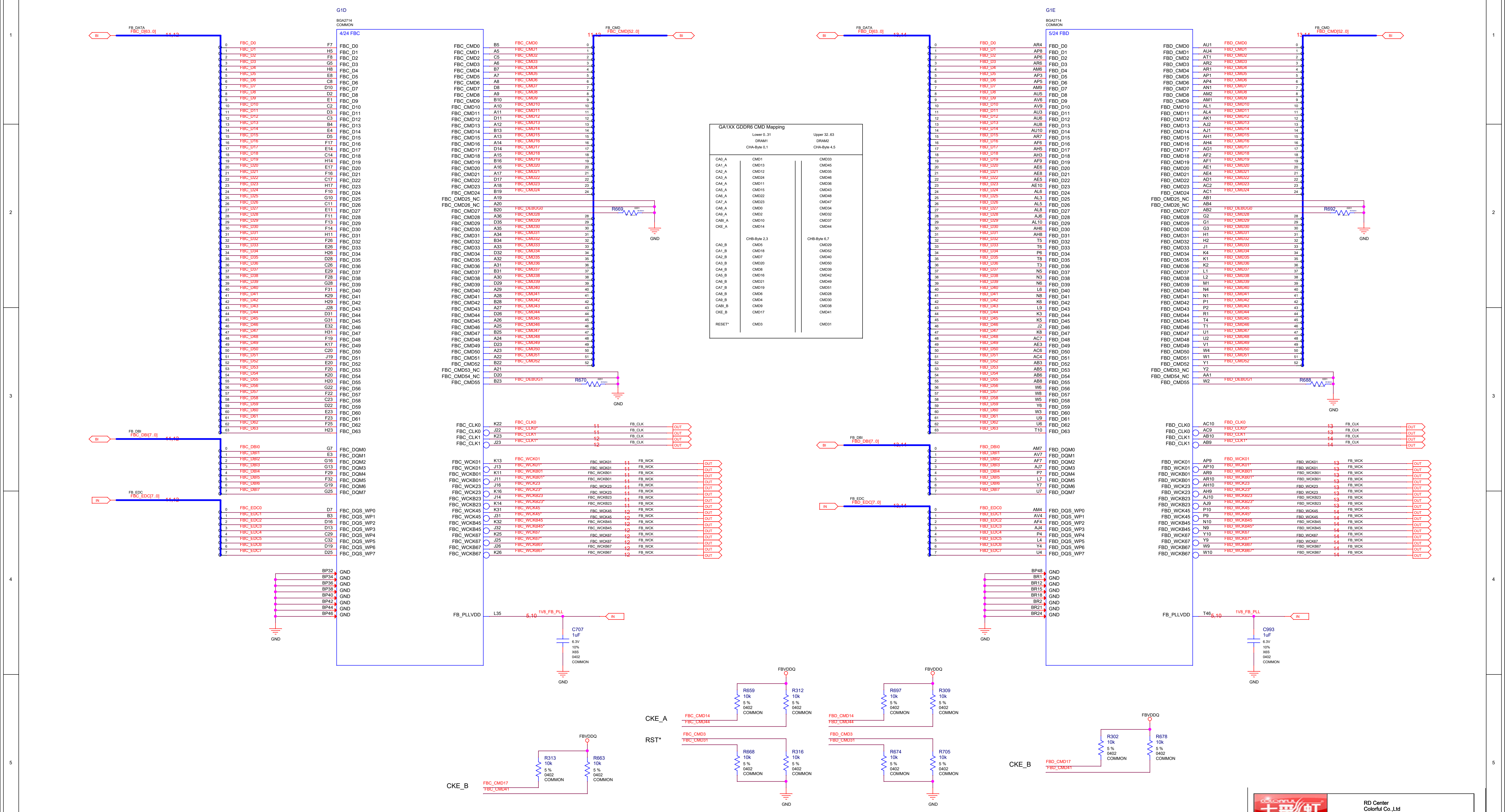
G1D
BGA2714
COMMON
4/24 FBC
FB_DATA
FBC_D[63..0]
11,12
BI
FB_CMD
FBC_CMD[52..0]
11,12
FBC_D0 … FBC_D63
FBC_CMD0 … FBC_CMD55
FBC_CMD25_NC
FBC_CMD26_NC
FBC_CMD53_NC
FBC_CMD54_NC
FBC_DEBUG0
FBC_DEBUG1
R669
R670
GND
FB_DBI
FBC_DBI[7..0]
FBC_DQM0 … FBC_DQM7
FB_EDC
FBC_EDC[7..0]
IN
FBC_DQS_WP0 … FBC_DQS_WP7
FBC_CLK0
FBC_CLK0*
FBC_CLK1
FBC_CLK1*
FB_CLK
OUT
FBC_WCK01
FBC_WCK01*
FBC_WCKB01
FBC_WCKB01*
FBC_WCK23
FBC_WCK23*
FBC_WCKB23
FBC_WCKB23*
FBC_WCK45
FBC_WCK45*
FBC_WCKB45
FBC_WCKB45*
FBC_WCK67
FBC_WCK67*
FBC_WCKB67
FBC_WCKB67*
FB_WCK
BP32
BP34
BP36
BP38
BP40
BP42
BP44
BP46
GND
FB_PLLVDD
L35
5,10
1V8_FB_PLL
C707
1uF
6.3V
10%
X6S
0402
COMMON
G1E
BGA2714
COMMON
5/24 FBD
FB_DATA
FBD_D[63..0]
13,14
FB_CMD
FBD_CMD[52..0]
13,14
FBD_D0 … FBD_D63
FBD_CMD0 … FBD_CMD55
FBD_CMD25_NC
FBD_CMD26_NC
FBD_CMD53_NC
FBD_CMD54_NC
FBD_DEBUG0
FBD_DEBUG1
R692
R688
FB_DBI
FBD_DBI[7..0]
FBD_DQM0 … FBD_DQM7
FB_EDC
FBD_EDC[7..0]
FBD_DQS_WP0 … FBD_DQS_WP7
FBD_CLK0
FBD_CLK0*
FBD_CLK1
FBD_CLK1*
FBD_WCK01 … FBD_WCKB67*
BP48
BR1
BR12
BR15
BR18
BR2
BR21
BR24
T46
C993
1uF
6.3V
10%
X6S
0402
COMMON
FBVDDQ
CKE_A
FBC_CMD14
FBC_CMD44
R659
10k
5 %
0402
COMMON
R312
10k
5 %
0402
COMMON
FBD_CMD14
FBD_CMD44
R697
10k
R309
10k
RST*
FBC_CMD3
FBC_CMD31
R668
10k
R316
10k
FBD_CMD3
FBD_CMD31
R674
10k
R705
10k
CKE_B
FBC_CMD17
FBC_CMD41
R313
10k
R663
10k
FBD_CMD17
FBD_CMD41
R302
10k
R678
10k
A
B
C
D
E
F
G
H
1
2
3
4
5

GA1XX GDDR6 CMD Mapping

	Lower 0..31 DRAM1 CHA-Byte 0,1	Upper 32..63 DRAM2 CHA-Byte 4,5
CA0_A	CMD1	CMD33
CA1_A	CMD13	CMD45
CA2_A	CMD12	CMD35
CA3_A	CMD24	CMD46
CA4_A	CMD11	CMD36
CA5_A	CMD15	CMD43
CA6_A	CMD22	CMD48
CA7_A	CMD23	CMD47
CA8_A	CMD0	CMD34
CA9_A	CMD2	CMD32
CABI_A	CMD10	CMD37
CKE_A	CMD14	CMD44
	CHB-Byte 2,3	CHB-Byte 6,7
CA0_B	CMD5	CMD29
CA1_B	CMD18	CMD52
CA2_B	CMD7	CMD40
CA3_B	CMD20	CMD50
CA4_B	CMD8	CMD39
CA5_B	CMD16	CMD42
CA6_B	CMD21	CMD49
CA7_B	CMD19	CMD51
CA8_B	CMD6	CMD28
CA9_B	CMD4	CMD30
CABI_B	CMD9	CMD38
CKE_B	CMD17	CMD41
RESET*	CMD3	CMD31

ASSEMBLY	<ASSEMBLY_DESCRIPTION>
PAGE DETAIL	MEMORY: GPU FB_CD

ALL NVIDIA DESIGN SPECIFICATIONS, REFERENCE SPECIFICATIONS, REFERENCE BOARDS, FILES, DRAWINGS, DIAGNOSTICS, LISTS AND OTHER DOCUMENTS OR INFORMATION (TOGETHER AND SEPARATELY, 'MATERIALS') ARE BEING PROVIDED 'AS IS'. THE MATERIALS MAY CONTAIN KNOWN AND UNKNOWN VIOLATIONS OR DEVIATIONS OF INDUSTRY STANDARDS AND SPECIFICATIONS. NVIDIA MAKES NO WARRANTIES, EXPRESSED, IMPLIED, STATUTORY OR OTHERWISE WITH RESPECT TO THE MATERIALS OR OTHERWISE, AND EXPRESSLY DISCLAIMS ALL IMPLIED WARRANTIES INCLUDING, WITHOUT LIMITATION, THE WARRANTIES OF DESIGN, OF NONINFRINGEMENT, MERCHANTABILITY OR FITNESS FOR A PARTICULAR PURPOSE, OR ARISING FROM A COURSE OF DEALING, TRADE USAGE, TRADE PRACTICE, OR INDUSTRY STANDARDS.

RD Center
Colorful Co.,Ltd
深圳市七彩虹科技发展有限公司

Size	Document Number	Rev
Custom	GA104H8-E10	A
Date:	Monday, July 13, 2020	Sheet 10 of 57

Page11: MEMORY: FBC Partition 31..0

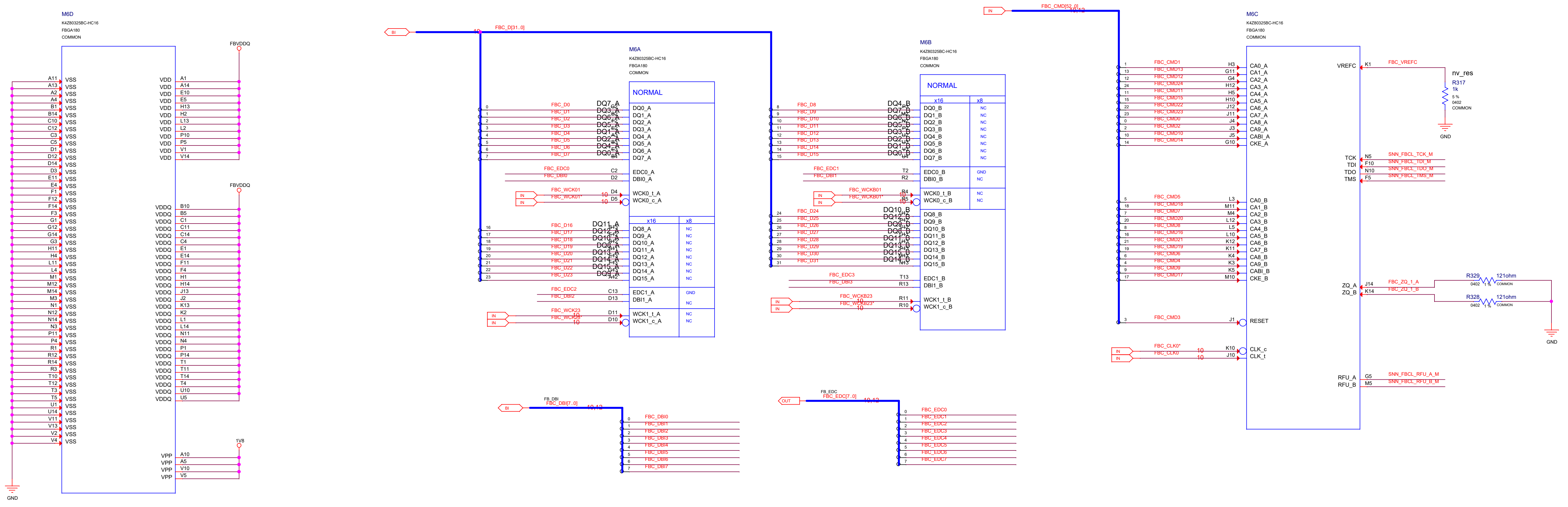
M6D
K4Z80325BC-HC16
FBGA180
COMMON
FBVDDQ
VSS
VDD
VDDQ
VPP
1V8
GND
M6A
K4Z80325BC-HC16
FBGA180
COMMON
NORMAL
FBC_D[31..0]
BI
DQ0_A
DQ1_A
DQ2_A
DQ3_A
DQ4_A
DQ5_A
DQ6_A
DQ7_A
EDC0_A
DBI0_A
WCK0_t_A
WCK0_c_A
DQ8_A
DQ9_A
DQ10_A
DQ11_A
DQ12_A
DQ13_A
DQ14_A
DQ15_A
EDC1_A
DBI1_A
WCK1_t_A
WCK1_c_A
x16
x8
NC
GND
M6B
K4Z80325BC-HC16
FBGA180
COMMON
NORMAL
DQ0_B
DQ1_B
DQ2_B
DQ3_B
DQ4_B
DQ5_B
DQ6_B
DQ7_B
EDC0_B
DBI0_B
WCK0_t_B
WCK0_c_B
DQ8_B
DQ9_B
DQ10_B
DQ11_B
DQ12_B
DQ13_B
DQ14_B
DQ15_B
EDC1_B
DBI1_B
WCK1_t_B
WCK1_c_B
FBC_CMD[52..0]
IN
M6C
K4Z80325BC-HC16
FBGA180
COMMON
CA0_A
CA1_A
CA2_A
CA3_A
CA4_A
CA5_A
CA6_A
CA7_A
CA8_A
CA9_A
CABI_A
CKE_A
CA0_B
CA1_B
CA2_B
CA3_B
CA4_B
CA5_B
CA6_B
CA7_B
CA8_B
CA9_B
CABI_B
CKE_B
RESET
CLK_c
CLK_t
FBC_CLK0*
FBC_CLK0
VREFC
FBC_VREFC
nv_res
R317
1k
5 %
0402
COMMON
TCK
TDI
TDO
TMS
SNN_FBCL_TCK_M
SNN_FBCL_TDI_M
SNN_FBCL_TDO_M
SNN_FBCL_TMS_M
ZQ_A
ZQ_B
FBC_ZQ_1_A
FBC_ZQ_1_B
R329
121ohm
R328
121ohm
RFU_A
RFU_B
SNN_FBCL_RFU_A_M
SNN_FBCL_RFU_B_M
FB_DBI
FBC_DBI[7..0]
FBC_DBI0
FBC_DBI1
FBC_DBI2
FBC_DBI3
FBC_DBI4
FBC_DBI5
FBC_DBI6
FBC_DBI7
FB_EDC
FBC_EDC[7..0]
OUT
FBC_EDC0
FBC_EDC1
FBC_EDC2
FBC_EDC3
FBC_EDC4
FBC_EDC5
FBC_EDC6
FBC_EDC7

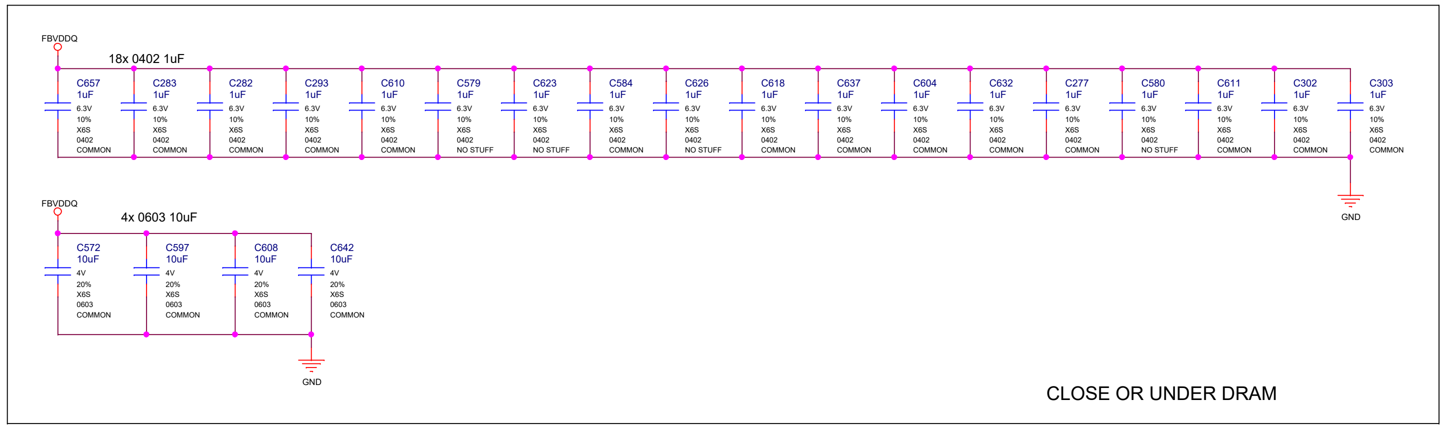
FBVDDQ
18x 0402 1uF
C657
C283
C282
C293
C610
C579
C623
C584
C626
C618
C637
C604
C632
C277
C580
C611
C302
C303
1uF
6.3V
10%
X6S
0402
COMMON
NO STUFF
GND
4x 0603 10uF
C572
C597
C608
C642
10uF
4V
20%
X6S
0603
COMMON
GND

CLOSE OR UNDER DRAM

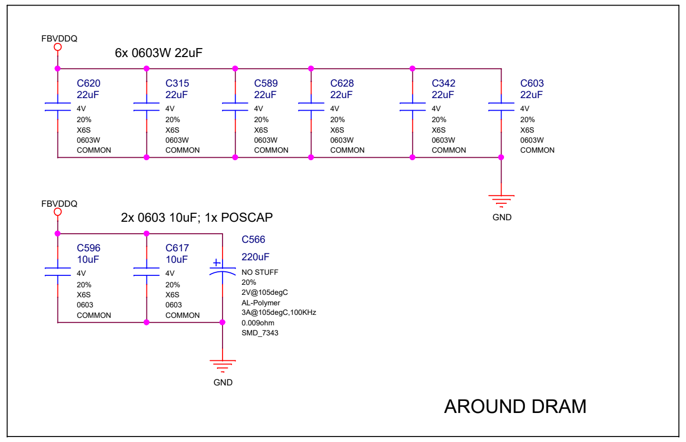
FBVDDQ
6x 0603W 22uF
C620
C315
C589
C628
C342
C603
22uF
4V
20%
X6S
0603W
COMMON
GND
2x 0603 10uF; 1x POSCAP
C596
C617
10uF
C566
220uF
NO STUFF
20%
2V@105degC
AL-Polymer
3A@105degC,100KHz
0.009ohm
SMD_7343
GND

AROUND DRAM

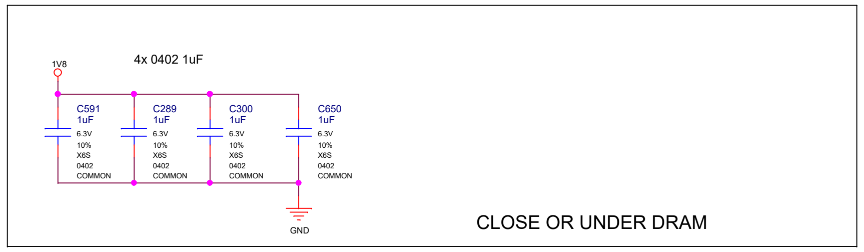
1V8
4x 0402 1uF
C591
C289
C300
C650
1uF
6.3V
10%
X6S
0402
COMMON
GND

CLOSE OR UNDER DRAM

ASSEMBLY	<ASSEMBLY_DESCRIPTION>
PAGE DETAIL	MEMORY: FBC[31:0]

ALL NVIDIA DESIGN SPECIFICATIONS, REFERENCE SPECIFICATIONS, REFERENCE BOARDS, FILES, DRAWINGS, DIAGNOSTICS, LISTS AND OTHER DOCUMENTS OR INFORMATION (TOGETHER AND SEPARATELY, 'MATERIALS') ARE BEING PROVIDED 'AS IS'. THE MATERIALS MAY CONTAIN KNOWN AND UNKNOWN VIOLATIONS OR DEVIATIONS OF INDUSTRY STANDARDS AND SPECIFICATIONS. NVIDIA MAKES NO WARRANTIES, EXPRESSED, IMPLIED, STATUTORY OR OTHERWISE WITH RESPECT TO THE MATERIALS OR OTHERWISE, AND EXPRESSLY DISCLAIMS ALL IMPLIED WARRANTIES INCLUDING, WITHOUT LIMITATION, THE WARRANTIES OF DESIGN, OF NONINFRINGEMENT, MERCHANTABILITY OR FITNESS FOR A PARTICULAR PURPOSE, OR ARISING FROM A COURSE OF DEALING, TRADE USAGE, TRADE PRACTICE, OR INDUSTRY STANDARDS.

RD Center
Colorful Co.,Ltd
深圳市七彩虹科技发展有限公司

Size	Document Number	Rev
Custom	GA104H8-E10	A

Date: Monday, July 13, 2020 Sheet 11 of 57

Page12: MEMORY: FBC Partition 63..32

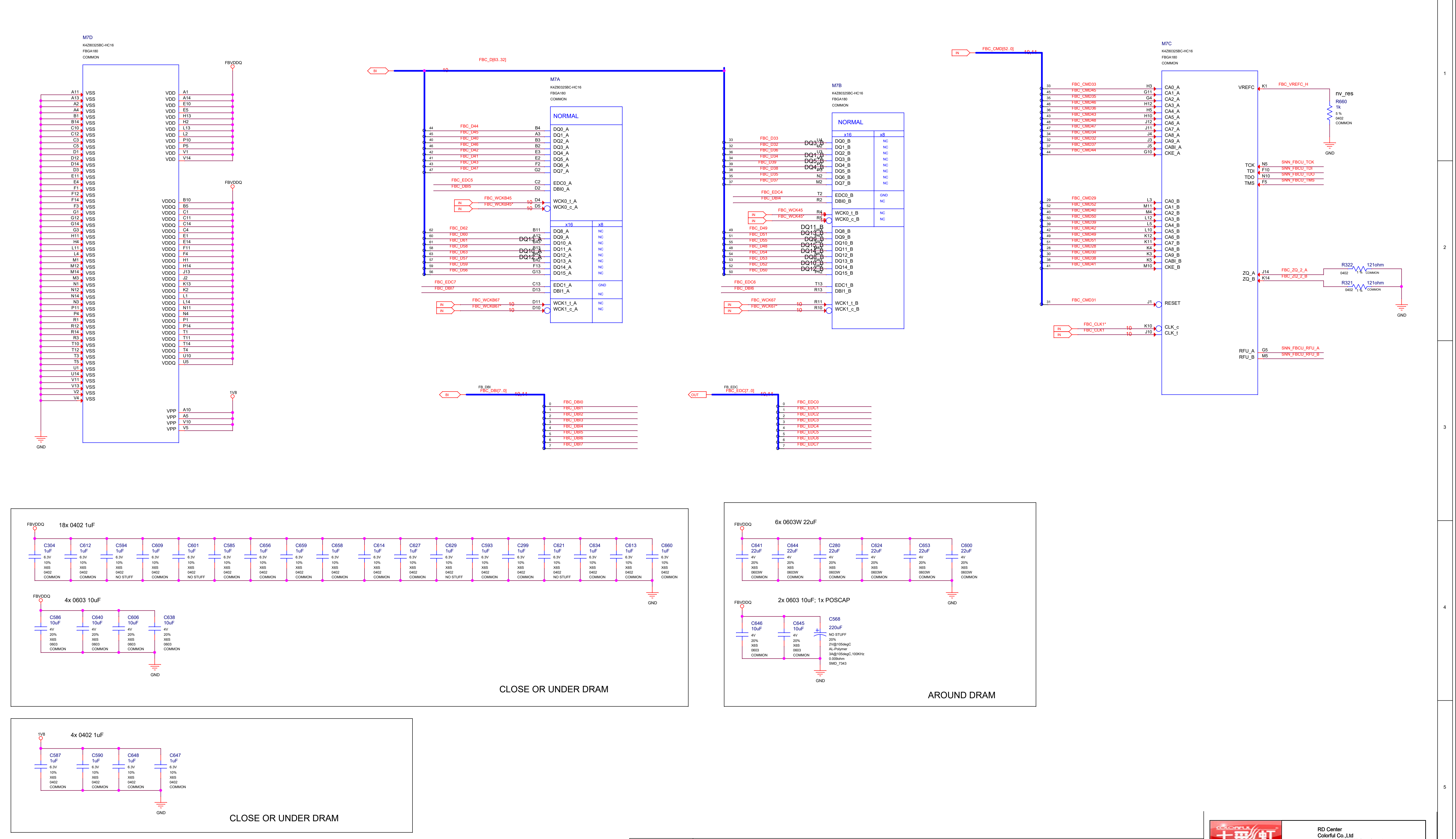
M7D
K4Z80325BC-HC16
FBGA180
COMMON
FBVDDQ
VSS
VDD
VDDQ
VPP
1V8
GND
FBC_D[63..32]
BI
M7A
K4Z80325BC-HC16
FBGA180
COMMON
NORMAL
x16
x8
DQ0_A
DQ1_A
DQ2_A
DQ3_A
DQ4_A
DQ5_A
DQ6_A
DQ7_A
EDC0_A
DBI0_A
WCK0_t_A
WCK0_c_A
DQ8_A
DQ9_A
DQ10_A
DQ11_A
DQ12_A
DQ13_A
DQ14_A
DQ15_A
EDC1_A
DBI1_A
WCK1_t_A
WCK1_c_A
NC
GND
FBC_WCKB45
FBC_WCKB67
IN
M7B
K4Z80325BC-HC16
FBGA180
COMMON
NORMAL
DQ0_B
DQ1_B
DQ2_B
DQ3_B
DQ4_B
DQ5_B
DQ6_B
DQ7_B
EDC0_B
DBI0_B
WCK0_t_B
WCK0_c_B
DQ8_B
DQ9_B
DQ10_B
DQ11_B
DQ12_B
DQ13_B
DQ14_B
DQ15_B
EDC1_B
DBI1_B
WCK1_t_B
WCK1_c_B
FBC_WCK45
FBC_WCK67
FBC_CMD[52..0]
M7C
K4Z80325BC-HC16
FBGA180
COMMON
CA0_A
CA1_A
CA2_A
CA3_A
CA4_A
CA5_A
CA6_A
CA7_A
CA8_A
CA9_A
CABI_A
CKE_A
CA0_B
CA1_B
CA2_B
CA3_B
CA4_B
CA5_B
CA6_B
CA7_B
CA8_B
CA9_B
CABI_B
CKE_B
RESET
CLK_c
CLK_t
FBC_CLK1
VREFC
FBC_VREFC_H
nv_res
R660
1k
5 %
0402
COMMON
TCK
TDI
TDO
TMS
SNN_FBCU_TCK
SNN_FBCU_TDI
SNN_FBCU_TDO
SNN_FBCU_TMS
ZQ_A
ZQ_B
FBC_ZQ_2_A
FBC_ZQ_2_B
R322
R321
121ohm
RFU_A
RFU_B
SNN_FBCU_RFU_A
SNN_FBCU_RFU_B
FB_DBI
FBC_DBI[7..0]
FB_EDC
FBC_EDC[7..0]
OUT
18x 0402 1uF
C304
C612
C594
C609
C601
C585
C656
C659
C658
C614
C627
C629
C593
C299
C621
C634
C613
C660
1uF
6.3V
10%
X6S
0402
COMMON
NO STUFF
4x 0603 10uF
C586
C640
C606
C638
10uF
4V
20%
0603
CLOSE OR UNDER DRAM
6x 0603W 22uF
C641
C644
C280
C624
C653
C600
22uF
0603W
2x 0603 10uF; 1x POSCAP
C646
C645
C568
220uF
NO STUFF
2V@105degC
AL-Polymer
3A@105degC,100KHz
0.009ohm
SMD_7343
AROUND DRAM
4x 0402 1uF
C587
C590
C648
C647
CLOSE OR UNDER DRAM

ASSEMBLY	<ASSEMBLY_DESCRIPTION>
PAGE DETAIL	MEMORY: FBC[63:32]

ALL NVIDIA DESIGN SPECIFICATIONS, REFERENCE SPECIFICATIONS, REFERENCE BOARDS, FILES, DRAWINGS, DIAGNOSTICS, LISTS AND OTHER DOCUMENTS OR INFORMATION (TOGETHER AND SEPARATELY, 'MATERIALS') ARE BEING PROVIDED 'AS IS'. THE MATERIALS MAY CONTAIN KNOWN AND UNKNOWN VIOLATIONS OR DEVIATIONS OF INDUSTRY STANDARDS AND SPECIFICATIONS. NVIDIA MAKES NO WARRANTIES, EXPRESSED, IMPLIED, STATUTORY OR OTHERWISE WITH RESPECT TO THE MATERIALS OR OTHERWISE, AND EXPRESSLY DISCLAIMS ALL IMPLIED WARRANTIES INCLUDING, WITHOUT LIMITATION, THE WARRANTIES OF DESIGN, OF NONINFRINGEMENT, MERCHANTABILITY OR FITNESS FOR A PARTICULAR PURPOSE, OR ARISING FROM A COURSE OF DEALING, TRADE USAGE, TRADE PRACTICE, OR INDUSTRY STANDARDS.

RD Center
Colorful Co.,Ltd
深圳市七彩虹科技发展有限公司

Size	Document Number	Rev
Custom	GA104H8-E10	A

Date: Monday, July 13, 2020 Sheet 12 of 57

Page13: MEMORY: FBD Partition 31..0

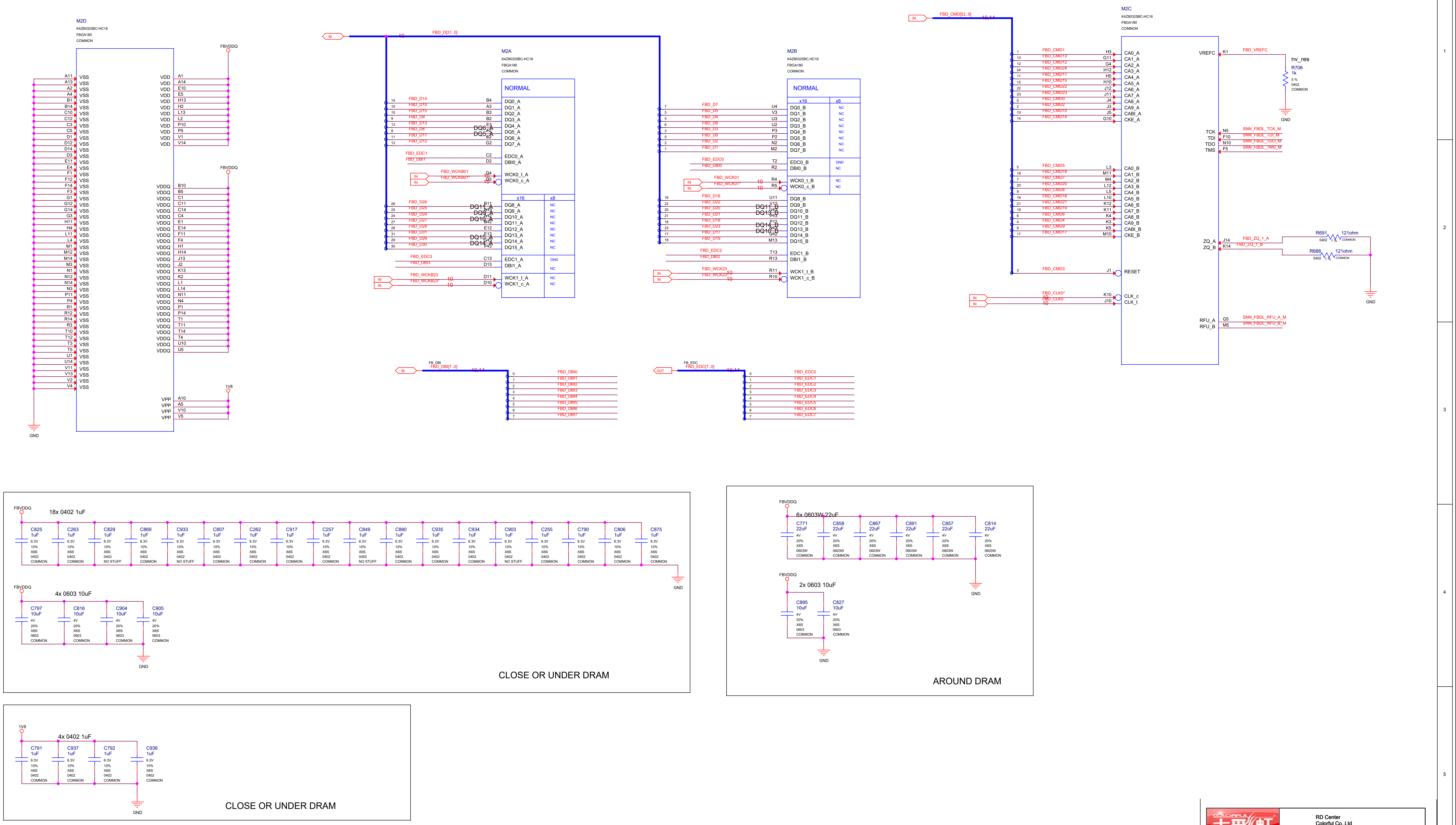
M2D
K4Z80325BC-HC16
FBGA180
COMMON
FBVDDQ
VSS
VDD
VDDQ
VPP
1V8
GND
M2A
K4Z80325BC-HC16
FBGA180
COMMON
NORMAL
FBD_D[31..0]
BI
DQ0_A
DQ1_A
DQ2_A
DQ3_A
DQ4_A
DQ5_A
DQ6_A
DQ7_A
EDC0_A
DBI0_A
WCK0_t_A
WCK0_c_A
x16
x8
DQ8_A
DQ9_A
DQ10_A
DQ11_A
DQ12_A
DQ13_A
DQ14_A
DQ15_A
EDC1_A
DBI1_A
WCK1_t_A
WCK1_c_A
FBD_WCK01
FBD_WCK01*
FBD_WCK23
FBD_WCK23*
FBD_EDC1
FBD_DBI1
FBD_EDC3
FBD_DBI3
M2B
K4Z80325BC-HC16
FBGA180
COMMON
NORMAL
DQ0_B
DQ1_B
DQ2_B
DQ3_B
DQ4_B
DQ5_B
DQ6_B
DQ7_B
EDC0_B
DBI0_B
WCK0_t_B
WCK0_c_B
DQ8_B
DQ9_B
DQ10_B
DQ11_B
DQ12_B
DQ13_B
DQ14_B
DQ15_B
EDC1_B
DBI1_B
WCK1_t_B
WCK1_c_B
NC
GND
FBD_EDC0
FBD_DBI0
FBD_EDC2
FBD_DBI2
M2C
K4Z80325BC-HC16
FBGA180
COMMON
FBD_CMD[52..0]
IN
CA0_A
CA1_A
CA2_A
CA3_A
CA4_A
CA5_A
CA6_A
CA7_A
CA8_A
CA9_A
CABI_A
CKE_A
CA0_B
CA1_B
CA2_B
CA3_B
CA4_B
CA5_B
CA6_B
CA7_B
CA8_B
CA9_B
CABI_B
CKE_B
RESET
FBD_CMD3
CLK_c
CLK_t
FBD_CLK0*
FBD_CLK0
VREFC
FBD_VREFC
nv_res
R706
1k
5 %
0402
COMMON
TCK
TDI
TDO
TMS
SNN_FBDL_TCK_M
SNN_FBDL_TDI_M
SNN_FBDL_TDO_M
SNN_FBDL_TMS_M
ZQ_A
ZQ_B
FBD_ZQ_1_A
FBD_ZQ_1_B
R691
121ohm
R686
121ohm
RFU_A
RFU_B
SNN_FBDL_RFU_A_M
SNN_FBDL_RFU_B_M
FB_DBI
FBD_DBI[7..0]
FBD_DBI0
FBD_DBI1
FBD_DBI2
FBD_DBI3
FBD_DBI4
FBD_DBI5
FBD_DBI6
FBD_DBI7
FB_EDC
FBD_EDC[7..0]
OUT
FBD_EDC0
FBD_EDC1
FBD_EDC2
FBD_EDC3
FBD_EDC4
FBD_EDC5
FBD_EDC6
FBD_EDC7
18x 0402 1uF
C825
C263
C829
C869
C933
C807
C262
C917
C257
C849
C880
C935
C934
C903
C255
C790
C806
C875
1uF
6.3V
10%
X6S
0402
COMMON
NO STUFF
4x 0603 10uF
C797
C816
C904
C905
10uF
4V
20%
0603
CLOSE OR UNDER DRAM
6x 0603W 22uF
C771
C858
C867
C891
C857
C814
22uF
0603W
2x 0603 10uF
C895
C827
AROUND DRAM
4x 0402 1uF
C791
C937
C792
C936
CLOSE OR UNDER DRAM

ASSEMBLY	<ASSEMBLY_DESCRIPTION>
PAGE DETAIL	MEMORY: FBD[31:0]

ALL NVIDIA DESIGN SPECIFICATIONS, REFERENCE SPECIFICATIONS, REFERENCE BOARDS, FILES, DRAWINGS, DIAGNOSTICS, LISTS AND OTHER DOCUMENTS OR INFORMATION (TOGETHER AND SEPARATELY, 'MATERIALS') ARE BEING PROVIDED 'AS IS'. THE MATERIALS MAY CONTAIN KNOWN AND UNKNOWN VIOLATIONS OR DEVIATIONS OF INDUSTRY STANDARDS AND SPECIFICATIONS. NVIDIA MAKES NO WARRANTIES, EXPRESSED, IMPLIED, STATUTORY OR OTHERWISE WITH RESPECT TO THE MATERIALS OR OTHERWISE, AND EXPRESSLY DISCLAIMS ALL IMPLIED WARRANTIES INCLUDING, WITHOUT LIMITATION, THE WARRANTIES OF DESIGN, OF NONINFRINGEMENT, MERCHANTABILITY OR FITNESS FOR A PARTICULAR PURPOSE, OR ARISING FROM A COURSE OF DEALING, TRADE USAGE, TRADE PRACTICE, OR INDUSTRY STANDARDS.

RD Center
Colorful Co.,Ltd
深圳市七彩虹科技发展有限公司

Size	Document Number	Rev
Custom	GA104H8-E10	A

Date: Monday, July 13, 2020 Sheet 13 of 57

Page14: MEMORY: FBD Partition 63..32

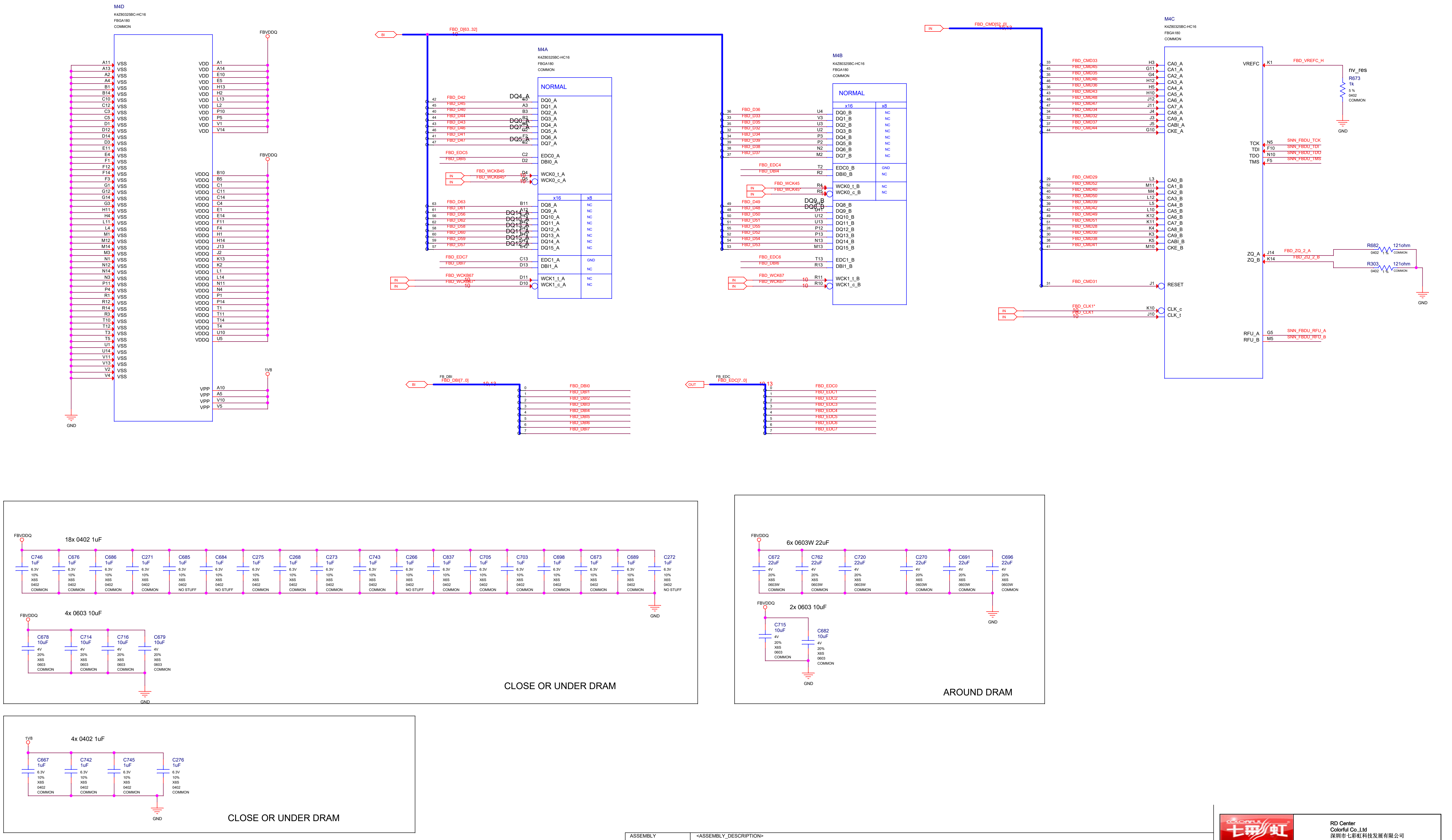
M4D
K4Z80325BC-HC16
FBGA180
COMMON
VSS
VDD
VDDQ
VPP
FBVDDQ
1V8
GND
M4A
K4Z80325BC-HC16
FBGA180
COMMON
NORMAL
FBD_D[63..32]
DQ0_A … DQ7_A
EDC0_A
DBI0_A
WCK0_t_A
WCK0_c_A
FBD_WCK45
FBD_WCK45*
DQ8_A … DQ15_A
EDC1_A
DBI1_A
WCK1_t_A
WCK1_c_A
FBD_WCK67
FBD_WCK67*
x16
x8
NC
GND
M4B
K4Z80325BC-HC16
FBGA180
COMMON
NORMAL
DQ0_B … DQ7_B
EDC0_B
DBI0_B
WCK0_t_B
WCK0_c_B
DQ8_B … DQ15_B
EDC1_B
DBI1_B
WCK1_t_B
WCK1_c_B
FB_DBI
FBD_DBI[7..0]
FBD_DBI0 … FBD_DBI7
FB_EDC
FBD_EDC[7..0]
FBD_EDC0 … FBD_EDC7
BI
OUT
IN
M4C
K4Z80325BC-HC16
FBGA180
COMMON
FBD_CMD[52..0]
CA0_A … CA9_A
CABI_A
CKE_A
CA0_B … CA9_B
CABI_B
CKE_B
RESET
FBD_CMD31
CLK_c
CLK_t
FBD_CLK1*
FBD_CLK1
VREFC
FBD_VREFC_H
nv_res
R673
1k
5 %
0402
COMMON
TCK
TDI
TDO
TMS
SNN_FBDU_TCK
SNN_FBDU_TDI
SNN_FBDU_TDO
SNN_FBDU_TMS
ZQ_A
ZQ_B
FBD_ZQ_2_A
FBD_ZQ_2_B
R682
R303
121ohm
RFU_A
RFU_B
SNN_FBDU_RFU_A
SNN_FBDU_RFU_B
18x 0402 1uF
C746 C676 C686 C271 C685 C684 C275 C268 C273 C743 C266 C637 C705 C703 C698 C673 C689 C272
1uF
6.3V
10%
X6S
0402
COMMON
NO STUFF
4x 0603 10uF
C678 C714 C716 C679
10uF
4V
20%
0603
CLOSE OR UNDER DRAM
6x 0603W 22uF
C672 C762 C720 C270 C691 C696
22uF
0603W
2x 0603 10uF
C715 C682
AROUND DRAM
4x 0402 1uF
C667 C742 C745 C276
CLOSE OR UNDER DRAM

ASSEMBLY	<ASSEMBLY_DESCRIPTION>
PAGE DETAIL	MEMORY: FBD[63:32]

ALL NVIDIA DESIGN SPECIFICATIONS, REFERENCE SPECIFICATIONS, REFERENCE BOARDS, FILES, DRAWINGS, DIAGNOSTICS, LISTS AND OTHER DOCUMENTS OR INFORMATION (TOGETHER AND SEPARATELY, 'MATERIALS') ARE BEING PROVIDED 'AS IS'. THE MATERIALS MAY CONTAIN KNOWN AND UNKNOWN VIOLATIONS OR DEVIATIONS OF INDUSTRY STANDARDS AND SPECIFICATIONS. NVIDIA MAKES NO WARRANTIES, EXPRESSED, IMPLIED, STATUTORY OR OTHERWISE WITH RESPECT TO THE MATERIALS OR OTHERWISE, AND EXPRESSLY DISCLAIMS ALL IMPLIED WARRANTIES INCLUDING, WITHOUT LIMITATION, THE WARRANTIES OF DESIGN, OF NONINFRINGEMENT, MERCHANTABILITY OR FITNESS FOR A PARTICULAR PURPOSE, OR ARISING FROM A COURSE OF DEALING, TRADE USAGE, TRADE PRACTICE, OR INDUSTRY STANDARDS.

RD Center
Colorful Co.,Ltd
深圳市七彩虹科技发展有限公司

Size	Document Number	Rev
Custom	GA104H8-E10	A

Date: Monday, July 13, 2020 Sheet 14 of 57

Page15: GPU PWR and GND

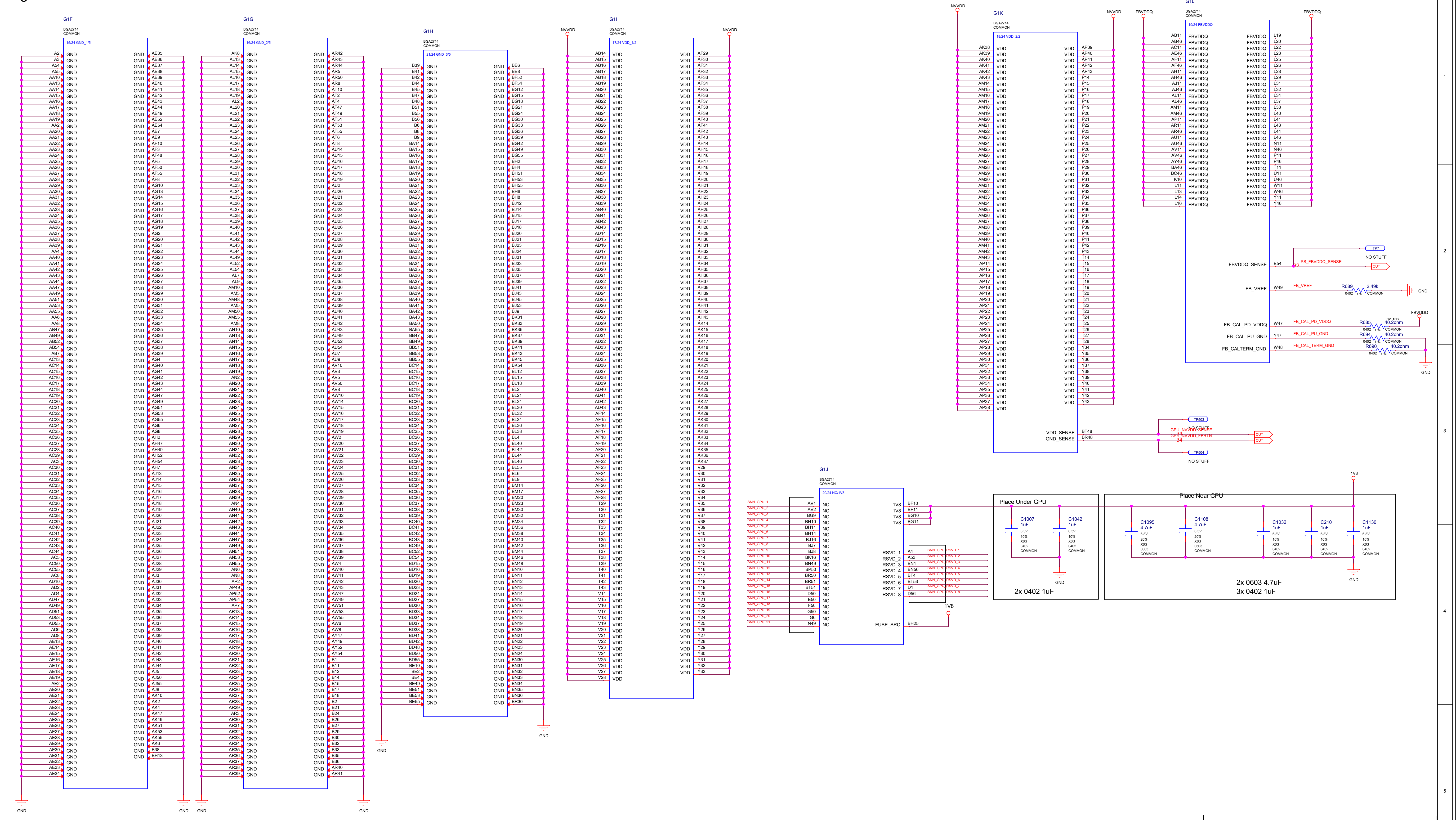

G1F
BGA2714
COMMON
15/24 GND_1/5
G1G
BGA2714
COMMON
16/24 GND_2/5
G1H
BGA2714
COMMON
21/24 GND_3/5
G1I
BGA2714
COMMON
17/24 VDD_1/2
NVVDD
G1K
BGA2714
COMMON
18/24 VDD_2/2
FBVDDQ
G1L
BGA2714
COMMON
19/24 FBVDDQ
FBVDDQ_SENSE
E54
PS_FBVDDQ_SENSE
32
OUT
TP7
NO STUFF
FB_VREF
W49
FB_VREF
R689
2.49k
0402
1 %
COMMON
GND
FB_CAL_PD_VDDQ
W47
FB_CAL_PD_VDDQ
R685
nv_res
40.2ohm
FB_CAL_PU_GND
Y47
FB_CAL_PU_GND
R694
40.2ohm
FB_CALTERM_GND
W48
FB_CAL_TERM_GND
R690
40.2ohm
VDD_SENSE
BT48
GND_SENSE
BR48
GPU_NVVDD_SENSE
GPU_NVVDD_FBRTN
34
OUT
TP503
TP504
NO STUFF
G1J
BGA2714
COMMON
20/24 NC/1V8
SNN_GPU_1 … SNN_GPU_21
AV1
AV2
BG9
BH10
BH11
BH14
BJ16
BJ7
BJ8
BK16
BN49
BP50
BR50
BR51
BT51
D50
E50
F50
G50
G6
N49
NC
1V8
BF10
BF11
BG10
BG11
RSVD_1 … RSVD_8
A4
A53
BN1
BN56
BT4
BT53
D1
D56
SNN_GPU_RSVD_1 … SNN_GPU_RSVD_8
FUSE_SRC
BH25
1V8
Place Under GPU
C1007
1uF
C1042
1uF
6.3V
10%
X6S
0402
COMMON
2x 0402 1uF
Place Near GPU
C1095
4.7uF
C1108
4.7uF
6.3V
20%
X6S
0603
COMMON
C1032
1uF
C210
1uF
C1130
1uF
2x 0603 4.7uF
3x 0402 1uF
GND

ASSEMBLY	<ASSEMBLY_DESCRIPTION>
PAGE DETAIL	GPU PWR & GND 1

ALL NVIDIA DESIGN SPECIFICATIONS, REFERENCE SPECIFICATIONS, REFERENCE BOARDS, FILES, DRAWINGS, DIAGNOSTICS, LISTS AND OTHER DOCUMENTS OR INFORMATION (TOGETHER AND SEPARATELY, 'MATERIALS') ARE BEING PROVIDED 'AS IS'. THE MATERIALS MAY CONTAIN KNOWN AND UNKNOWN VIOLATIONS OR DEVIATIONS OF INDUSTRY STANDARDS AND SPECIFICATIONS. NVIDIA MAKES NO WARRANTIES, EXPRESSED, IMPLIED, STATUTORY OR OTHERWISE WITH RESPECT TO THE MATERIALS OR OTHERWISE, AND EXPRESSLY DISCLAIMS ALL IMPLIED WARRANTIES INCLUDING, WITHOUT LIMITATION, THE WARRANTIES OF DESIGN, OF NONINFRINGEMENT, MERCHANTABILITY OR FITNESS FOR A PARTICULAR PURPOSE, OR ARISING FROM A COURSE OF DEALING, TRADE USAGE, TRADE PRACTICE, OR INDUSTRY STANDARDS.

Page16: GPU PWR and GND 2

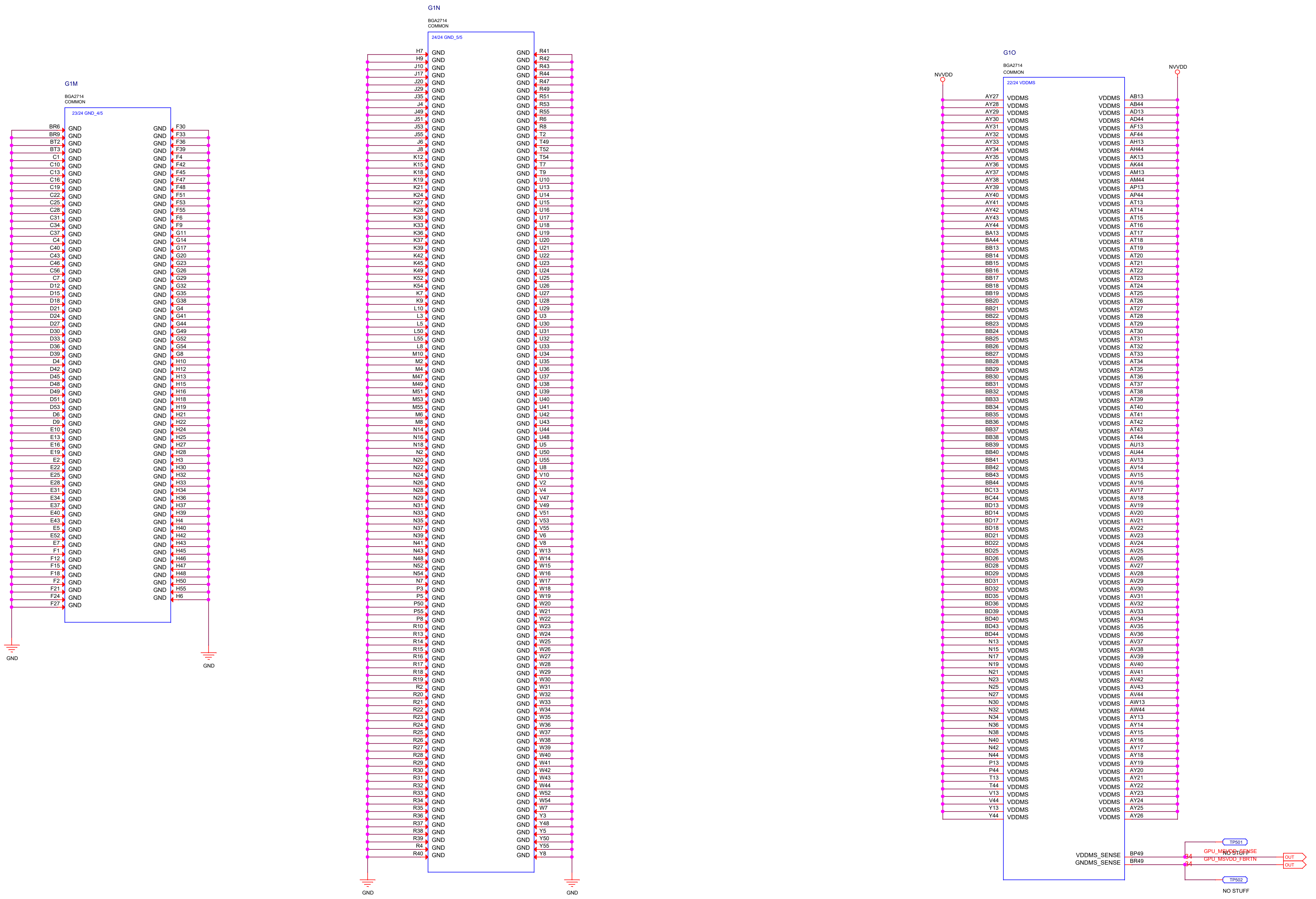
G1N
BGA2714
COMMON
24/24 GND_5/5
H7
H9
J10
J17
J20
J29
J35
J4
J49
J51
J53
J55
J6
J8
K12
K15
K18
K19
K21
K24
K27
K28
K30
K33
K36
K37
K39
K42
K45
K49
K52
K54
K7
K9
L10
L3
L5
L50
L55
L8
M10
M2
M4
M47
M49
M51
M53
M55
M6
M8
N14
N16
N18
N2
N20
N22
N24
N26
N28
N29
N31
N33
N35
N37
N39
N41
N43
N48
N52
N54
N7
P3
P5
P50
P55
P8
R10
R13
R14
R15
R16
R17
R18
R19
R2
R20
R21
R22
R23
R24
R25
R26
R27
R28
R29
R30
R31
R32
R33
R34
R35
R36
R37
R38
R39
R4
R40
GND
R41
R42
R43
R44
R47
R49
R51
R53
R55
R6
R8
T2
T49
T52
T54
T7
T9
U10
U13
U14
U15
U16
U17
U18
U19
U20
U21
U22
U23
U24
U25
U26
U27
U28
U29
U3
U30
U31
U32
U33
U34
U35
U36
U37
U38
U39
U40
U41
U42
U43
U44
U48
U5
U50
U55
U8
V10
V2
V4
V47
V49
V51
V53
V55
V6
V8
W13
W14
W15
W16
W17
W18
W19
W20
W21
W22
W23
W24
W25
W26
W27
W28
W29
W30
W31
W32
W33
W34
W35
W36
W37
W38
W39
W40
W41
W42
W43
W44
W52
W54
W7
Y3
Y48
Y5
Y50
Y55
Y8
GND
GND
G1M
BGA2714
COMMON
23/24 GND_4/5
BR6
BR9
BT2
BT3
C1
C10
C13
C16
C19
C22
C25
C28
C31
C34
C37
C4
C40
C43
C46
C55
C7
D12
D15
D18
D21
D24
D27
D30
D33
D36
D39
D4
D42
D45
D48
D49
D51
D53
D6
D9
E10
E13
E16
E19
E2
E22
E25
E28
E31
E34
E37
E40
E43
E5
E52
E7
F1
F12
F15
F18
F2
F21
F24
F27
GND
F30
F33
F36
F39
F4
F42
F45
F47
F48
F51
F53
F55
F6
F9
G11
G14
G17
G20
G23
G26
G29
G32
G35
G38
G4
G41
G44
G49
G52
G54
G8
H10
H12
H13
H15
H16
H18
H19
H21
H22
H24
H25
H27
H28
H3
H30
H32
H33
H34
H36
H37
H39
H4
H40
H42
H43
H45
H46
H47
H48
H50
H55
H6
GND
GND
G1O
BGA2714
COMMON
22/24 VDDMS
NVVDD
NVVDD
AY27
AY28
AY29
AY30
AY31
AY32
AY33
AY34
AY35
AY36
AY37
AY38
AY39
AY40
AY41
AY42
AY43
AY44
BA13
BA44
BB13
BB14
BB15
BB16
BB17
BB18
BB19
BB20
BB21
BB22
BB23
BB24
BB25
BB26
BB27
BB28
BB29
BB30
BB31
BB32
BB33
BB34
BB35
BB36
BB37
BB38
BB39
BB40
BB41
BB42
BB43
BB44
BC13
BC44
BD13
BD14
BD17
BD18
BD21
BD22
BD25
BD26
BD28
BD29
BD31
BD32
BD35
BD36
BD39
BD40
BD43
BD44
N13
N15
N17
N19
N21
N23
N25
N27
N30
N32
N34
N36
N38
N40
N42
N44
P13
P44
T13
T44
V13
V44
Y13
Y44
VDDMS
AB13
AB44
AD13
AD44
AF13
AF44
AH13
AH44
AK13
AK44
AM13
AM44
AP13
AP44
AT13
AT14
AT15
AT16
AT17
AT18
AT19
AT20
AT21
AT22
AT23
AT24
AT25
AT26
AT27
AT28
AT29
AT30
AT31
AT32
AT33
AT34
AT35
AT36
AT37
AT38
AT39
AT40
AT41
AT42
AT43
AT44
AU13
AU44
AV13
AV14
AV15
AV16
AV17
AV18
AV19
AV20
AV21
AV22
AV23
AV24
AV25
AV26
AV27
AV28
AV29
AV30
AV31
AV32
AV33
AV34
AV35
AV36
AV37
AV38
AV39
AV40
AV41
AV42
AV43
AV44
AW13
AW44
AY13
AY14
AY15
AY16
AY17
AY18
AY19
AY20
AY21
AY22
AY23
AY24
AY25
AY26
VDDMS_SENSE
GNDMS_SENSE
BP49
BR49
TP501
NO STUFF
GPU_MSVDD_SENSE
GPU_MSVDD_FBRTN
34
34
OUT
OUT
TP502
NO STUFF

ASSEMBLY	<ASSEMBLY_DESCRIPTION>
PAGE DETAIL	GPU PWR & GND 2

ALL NVIDIA DESIGN SPECIFICATIONS, REFERENCE SPECIFICATIONS, REFERENCE BOARDS, FILES, DRAWINGS, DIAGNOSTICS, LISTS AND OTHER DOCUMENTS OR INFORMATION (TOGETHER AND SEPARATELY, 'MATERIALS') ARE BEING PROVIDED 'AS IS'. THE MATERIALS MAY CONTAIN KNOWN AND UNKNOWN VIOLATIONS OR DEVIATIONS OF INDUSTRY STANDARDS AND SPECIFICATIONS. NVIDIA MAKES NO WARRANTIES, EXPRESSED, IMPLIED, STATUTORY OR OTHERWISE WITH RESPECT TO THE MATERIALS OR OTHERWISE, AND EXPRESSLY DISCLAIMS ALL IMPLIED WARRANTIES INCLUDING, WITHOUT LIMITATION, THE WARRANTIES OF DESIGN, OF NONINFRINGEMENT, MERCHANTABILITY OR FITNESS FOR A PARTICULAR PURPOSE, OR ARISING FROM A COURSE OF DEALING, TRADE USAGE, TRADE PRACTICE, OR INDUSTRY STANDARDS.

RD Center
Colorful Co.,Ltd
深圳市七彩虹科技发展有限公司

Size	Document Number	Rev
Custom	GA104H8-E10	A

Date: Monday, July 13, 2020 Sheet 16 of 57

Page17: XVDD

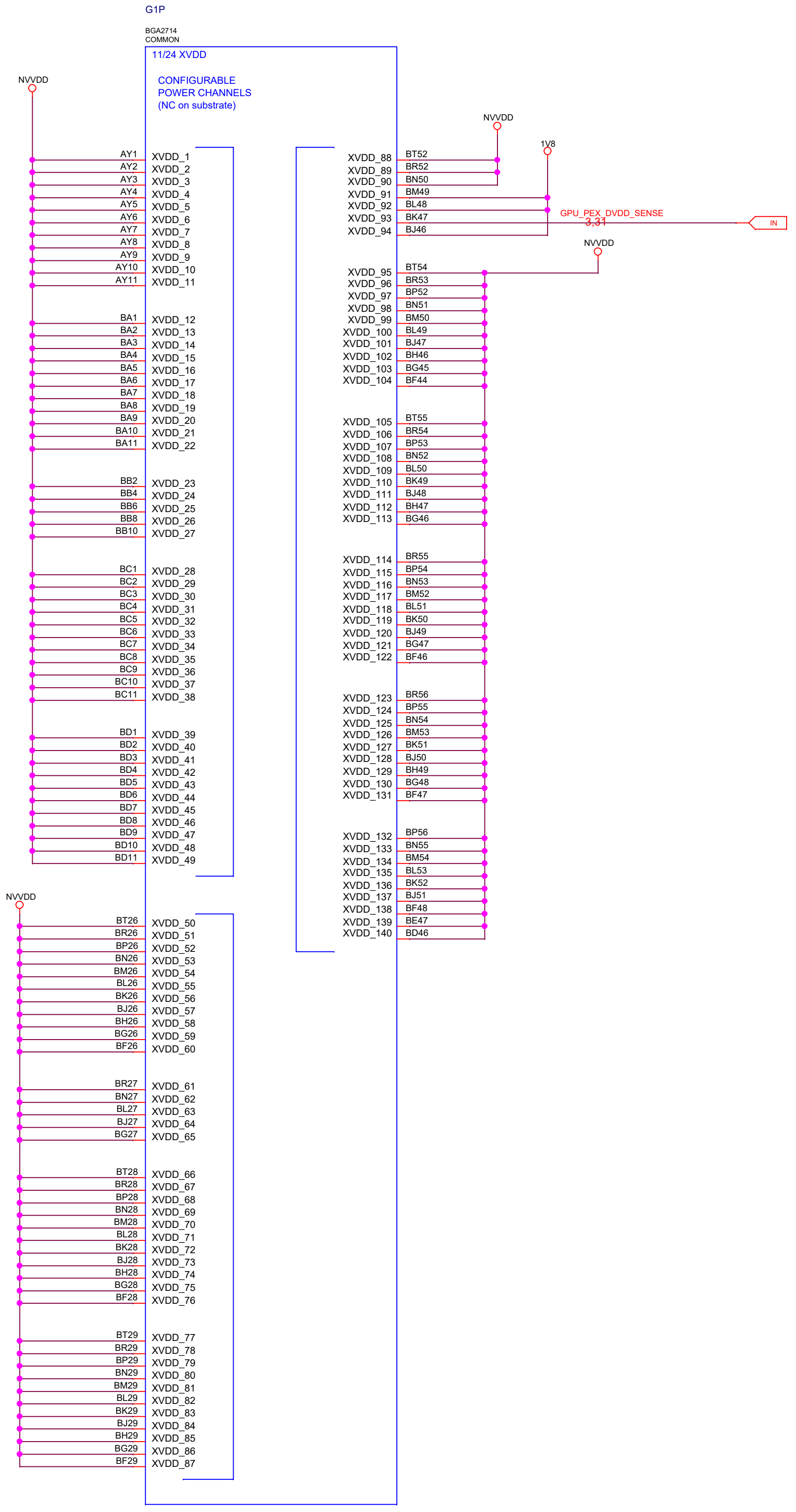
G1P
BGA2714
COMMON
11/24 XVDD
CONFIGURABLE
POWER CHANNELS
(NC on substrate)
NVVDD
AY1 XVDD_1
AY2 XVDD_2
AY3 XVDD_3
AY4 XVDD_4
AY5 XVDD_5
AY6 XVDD_6
AY7 XVDD_7
AY8 XVDD_8
AY9 XVDD_9
AY10 XVDD_10
AY11 XVDD_11
BA1 XVDD_12
BA2 XVDD_13
BA3 XVDD_14
BA4 XVDD_15
BA5 XVDD_16
BA6 XVDD_17
BA7 XVDD_18
BA8 XVDD_19
BA9 XVDD_20
BA10 XVDD_21
BA11 XVDD_22
BB2 XVDD_23
BB4 XVDD_24
BB6 XVDD_25
BB8 XVDD_26
BB10 XVDD_27
BC1 XVDD_28
BC2 XVDD_29
BC3 XVDD_30
BC4 XVDD_31
BC5 XVDD_32
BC6 XVDD_33
BC7 XVDD_34
BC8 XVDD_35
BC9 XVDD_36
BC10 XVDD_37
BC11 XVDD_38
BD1 XVDD_39
BD2 XVDD_40
BD3 XVDD_41
BD4 XVDD_42
BD5 XVDD_43
BD6 XVDD_44
BD7 XVDD_45
BD8 XVDD_46
BD9 XVDD_47
BD10 XVDD_48
BD11 XVDD_49
NVVDD
BT26 XVDD_50
BR26 XVDD_51
BP26 XVDD_52
BN26 XVDD_53
BM26 XVDD_54
BL26 XVDD_55
BK26 XVDD_56
BJ26 XVDD_57
BH26 XVDD_58
BG26 XVDD_59
BF26 XVDD_60
BR27 XVDD_61
BN27 XVDD_62
BL27 XVDD_63
BJ27 XVDD_64
BG27 XVDD_65
BT28 XVDD_66
BR28 XVDD_67
BP28 XVDD_68
BN28 XVDD_69
BM28 XVDD_70
BL28 XVDD_71
BK28 XVDD_72
BJ28 XVDD_73
BH28 XVDD_74
BG28 XVDD_75
BF28 XVDD_76
BT29 XVDD_77
BR29 XVDD_78
BP29 XVDD_79
BN29 XVDD_80
BM29 XVDD_81
BL29 XVDD_82
BK29 XVDD_83
BJ29 XVDD_84
BH29 XVDD_85
BG29 XVDD_86
BF29 XVDD_87
NVVDD
1V8
XVDD_88 BT52
XVDD_89 BR52
XVDD_90 BN50
XVDD_91 BM49
XVDD_92 BL48
XVDD_93 BK47
XVDD_94 BJ46
GPU_PEX_DVDD_SENSE
3,31
IN
NVVDD
XVDD_95 BT54
XVDD_96 BR53
XVDD_97 BP52
XVDD_98 BN51
XVDD_99 BM50
XVDD_100 BL49
XVDD_101 BJ47
XVDD_102 BH46
XVDD_103 BG45
XVDD_104 BF44
XVDD_105 BT55
XVDD_106 BR54
XVDD_107 BP53
XVDD_108 BN52
XVDD_109 BL50
XVDD_110 BK49
XVDD_111 BJ48
XVDD_112 BH47
XVDD_113 BG46
XVDD_114 BR55
XVDD_115 BP54
XVDD_116 BN53
XVDD_117 BM52
XVDD_118 BL51
XVDD_119 BK50
XVDD_120 BJ49
XVDD_121 BG47
XVDD_122 BF46
XVDD_123 BR56
XVDD_124 BP55
XVDD_125 BN54
XVDD_126 BM53
XVDD_127 BK51
XVDD_128 BJ50
XVDD_129 BH49
XVDD_130 BG48
XVDD_131 BF47
XVDD_132 BP56
XVDD_133 BN55
XVDD_134 BM54
XVDD_135 BL53
XVDD_136 BK52
XVDD_137 BJ51
XVDD_138 BF48
XVDD_139 BE47
XVDD_140 BD46

ASSEMBLY <ASSEMBLY_DESCRIPTION>
PAGE DETAIL GPU PWR & GND 3
(XVDD)

ALL NVIDIA DESIGN SPECIFICATIONS, REFERENCE SPECIFICATIONS, REFERENCE BOARDS, FILES, DRAWINGS, DIAGNOSTICS, LISTS AND OTHER DOCUMENTS OR INFORMATION (TOGETHER AND SEPARATELY, 'MATERIALS') ARE BEING PROVIDED 'AS IS'. THE MATERIALS MAY CONTAIN KNOWN AND UNKNOWN VIOLATIONS OR DEVIATIONS OF INDUSTRY STANDARDS AND SPECIFICATIONS. NVIDIA MAKES NO WARRANTIES, EXPRESSED, IMPLIED, STATUTORY OR OTHERWISE WITH RESPECT TO THE MATERIALS OR OTHERWISE, AND EXPRESSLY DISCLAIMS ALL IMPLIED WARRANTIES INCLUDING, WITHOUT LIMITATION, THE WARRANTIES OF DESIGN, OF NONINFRINGEMENT, MERCHANTABILITY OR FITNESS FOR A PARTICULAR PURPOSE, OR ARISING FROM A COURSE OF DEALING, TRADE USAGE, TRADE PRACTICE, OR INDUSTRY STANDARDS.

RD Center
Colorful Co.,Ltd
深圳市七彩虹科技发展有限公司

Size Custom
Document Number GA104H8-E10
Rev A

Date: Monday, July 13, 2020

Page18: GPU DECOUPLING FBVDDQ

FBVDDQ

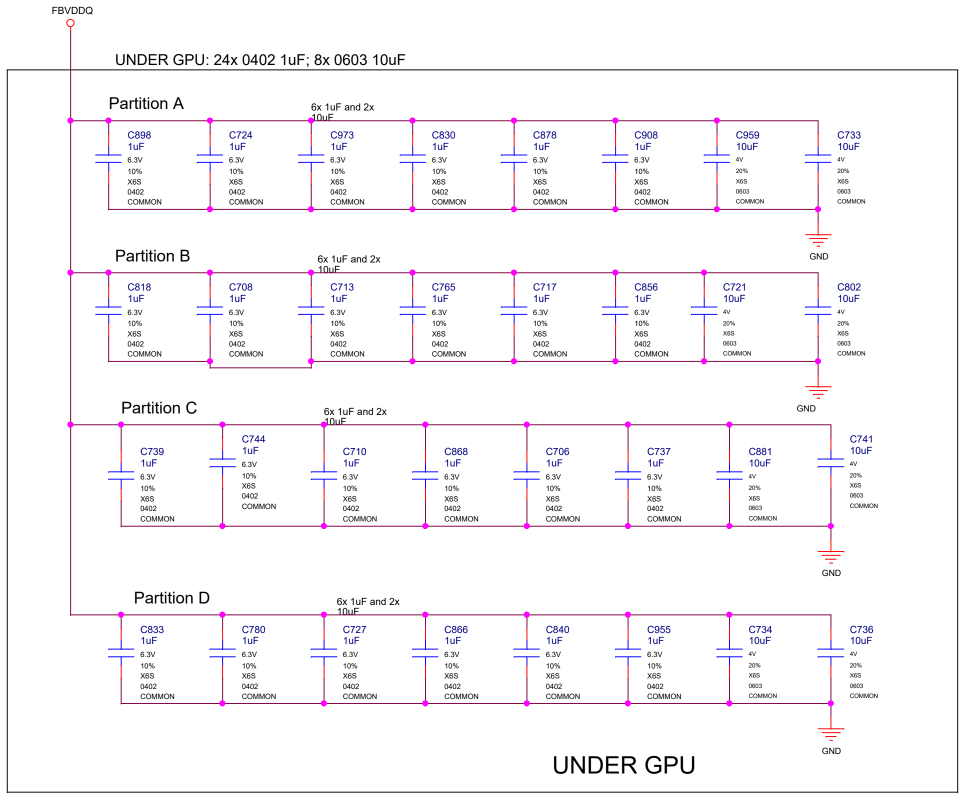
FBVDDQ
UNDER GPU: 24x 0402 1uF; 8x 0603 10uF
Partition A
6x 1uF and 2x 10uF
C898 1uF 6.3V 10% X6S 0402 COMMON
C724 1uF 6.3V 10% X6S 0402 COMMON
C973 1uF 6.3V 10% X6S 0402 COMMON
C830 1uF 6.3V 10% X6S 0402 COMMON
C878 1uF 6.3V 10% X6S 0402 COMMON
C908 1uF 6.3V 10% X6S 0402 COMMON
C959 10uF 4V 20% X6S 0603 COMMON
C733 10uF 4V 20% X6S 0603 COMMON
GND
Partition B
6x 1uF and 2x 10uF
C818 1uF 6.3V 10% X6S 0402 COMMON
C708 1uF 6.3V 10% X6S 0402 COMMON
C713 1uF 6.3V 10% X6S 0402 COMMON
C765 1uF 6.3V 10% X6S 0402 COMMON
C717 1uF 6.3V 10% X6S 0402 COMMON
C856 1uF 6.3V 10% X6S 0402 COMMON
C721 10uF 4V 20% X6S 0603 COMMON
C802 10uF 4V 20% X6S 0603 COMMON
GND
Partition C
6x 1uF and 2x 10uF
C739 1uF 6.3V 10% X6S 0402 COMMON
C744 1uF 6.3V 10% X6S 0402 COMMON
C710 1uF 6.3V 10% X6S 0402 COMMON
C868 1uF 6.3V 10% X6S 0402 COMMON
C706 1uF 6.3V 10% X6S 0402 COMMON
C737 1uF 6.3V 10% X6S 0402 COMMON
C881 10uF 4V 20% X6S 0603 COMMON
C741 10uF 4V 20% X6S 0603 COMMON
GND
Partition D
6x 1uF and 2x 10uF
C833 1uF 6.3V 10% X6S 0402 COMMON
C780 1uF 6.3V 10% X6S 0402 COMMON
C727 1uF 6.3V 10% X6S 0402 COMMON
C866 1uF 6.3V 10% X6S 0402 COMMON
C840 1uF 6.3V 10% X6S 0402 COMMON
C955 1uF 6.3V 10% X6S 0402 COMMON
C734 10uF 4V 20% X6S 0603 COMMON
C736 10uF 4V 20% X6S 0603 COMMON
GND
UNDER GPU

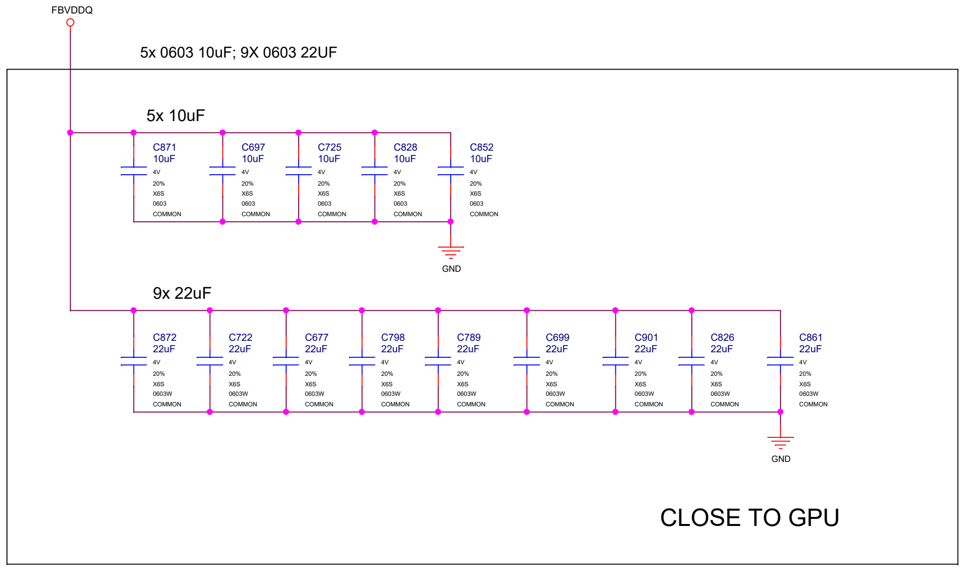
FBVDDQ
5x 0603 10uF; 9X 0603 22UF
5x 10uF
C871 10uF 4V 20% X6S 0603 COMMON
C697 10uF 4V 20% X6S 0603 COMMON
C725 10uF 4V 20% X6S 0603 COMMON
C828 10uF 4V 20% X6S 0603 COMMON
C852 10uF 4V 20% X6S 0603 COMMON
GND
9x 22uF
C872 22uF 4V 20% X6S 0603W COMMON
C722 22uF 4V 20% X6S 0603W COMMON
C677 22uF 4V 20% X6S 0603W COMMON
C798 22uF 4V 20% X6S 0603W COMMON
C789 22uF 4V 20% X6S 0603W COMMON
C699 22uF 4V 20% X6S 0603W COMMON
C901 22uF 4V 20% X6S 0603W COMMON
C826 22uF 4V 20% X6S 0603W COMMON
C861 22uF 4V 20% X6S 0603W COMMON
GND
CLOSE TO GPU

ASSEMBLY	<ASSEMBLY_DESCRIPTION>
PAGE DETAIL	GPU DECOUPLING FBVDDQ

ALL NVIDIA DESIGN SPECIFICATIONS, REFERENCE SPECIFICATIONS, REFERENCE BOARDS, FILES, DRAWINGS, DIAGNOSTICS, LISTS AND OTHER DOCUMENTS OR INFORMATION (TOGETHER AND SEPARATELY, 'MATERIALS') ARE BEING PROVIDED 'AS IS'. THE MATERIALS MAY CONTAIN KNOWN AND UNKNOWN VIOLATIONS OR DEVIATIONS OF INDUSTRY STANDARDS AND SPECIFICATIONS. NVIDIA MAKES NO WARRANTIES, EXPRESSED, IMPLIED, STATUTORY OR OTHERWISE WITH RESPECT TO THE MATERIALS OR OTHERWISE, AND EXPRESSLY DISCLAIMS ALL IMPLIED WARRANTIES INCLUDING, WITHOUT LIMITATION, THE WARRANTIES OF DESIGN, OF NONINFRINGEMENT, MERCHANTABILITY OR FITNESS FOR A PARTICULAR PURPOSE, OR ARISING FROM A COURSE OF DEALING, TRADE USAGE, TRADE PRACTICE, OR INDUSTRY STANDARDS.

RD Center
Colorful Co.,Ltd
深圳市七彩虹科技发展有限公司

Size	Document Number	Rev
Custom	GA104H8-E10	A

Date: Monday, July 13, 2020 Sheet 18 of 57

Page19: GPU DECOUPLING NVVDD

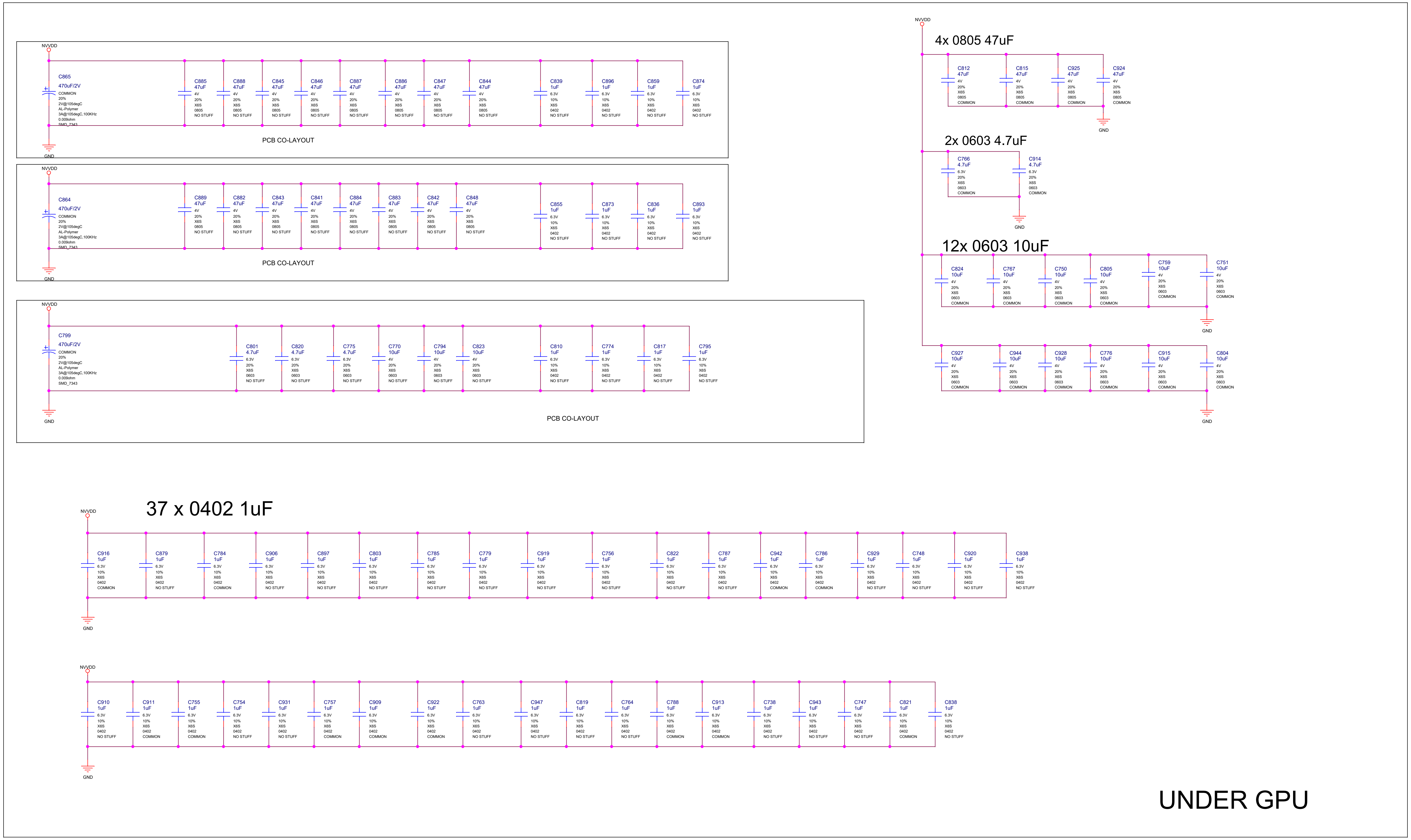
NVVDD
GND
C865 470uF/2V COMMON 20% 2V@105degC AL-Polymer 3A@105degC,100KHz 0.009ohm SMD_7343
C885 47uF 4V 20% X6S 0805 NO STUFF
C888 47uF 4V 20% X6S 0805 NO STUFF
C845 47uF 4V 20% X6S 0805 NO STUFF
C846 47uF 4V 20% X6S 0805 NO STUFF
C887 47uF 4V 20% X6S 0805 NO STUFF
C886 47uF 4V 20% X6S 0805 NO STUFF
C847 47uF 4V 20% X6S 0805 NO STUFF
C844 47uF 4V 20% X6S 0805 NO STUFF
C839 1uF 6.3V 10% X6S 0402 NO STUFF
C896 1uF 6.3V 10% X6S 0402 NO STUFF
C859 1uF 6.3V 10% X6S 0402 NO STUFF
C874 1uF 6.3V 10% X6S 0402 NO STUFF
PCB CO-LAYOUT
C864 470uF/2V COMMON 20% 2V@105degC AL-Polymer 3A@105degC,100KHz 0.009ohm SMD_7343
C889 47uF 4V 20% X6S 0805 NO STUFF
C882 47uF 4V 20% X6S 0805 NO STUFF
C843 47uF 4V 20% X6S 0805 NO STUFF
C841 47uF 4V 20% X6S 0805 NO STUFF
C884 47uF 4V 20% X6S 0805 NO STUFF
C883 47uF 4V 20% X6S 0805 NO STUFF
C842 47uF 4V 20% X6S 0805 NO STUFF
C848 47uF 4V 20% X6S 0805 NO STUFF
C855 1uF 6.3V 10% X6S 0402 NO STUFF
C873 1uF 6.3V 10% X6S 0402 NO STUFF
C836 1uF 6.3V 10% X6S 0402 NO STUFF
C893 1uF 6.3V 10% X6S 0402 NO STUFF
PCB CO-LAYOUT
C799 470uF/2V COMMON 20% 2V@105degC AL-Polymer 3A@105degC,100KHz 0.009ohm SMD_7343
C801 4.7uF 6.3V 20% X6S 0603 NO STUFF
C820 4.7uF 6.3V 20% X6S 0603 NO STUFF
C775 4.7uF 6.3V 20% X6S 0603 NO STUFF
C770 10uF 4V 20% X6S 0603 NO STUFF
C794 10uF 4V 20% X6S 0603 NO STUFF
C823 10uF 4V 20% X6S 0603 NO STUFF
C810 1uF 6.3V 10% X6S 0402 NO STUFF
C774 1uF 6.3V 10% X6S 0402 NO STUFF
C817 1uF 6.3V 10% X6S 0402 NO STUFF
C795 1uF 6.3V 10% X6S 0402 NO STUFF
PCB CO-LAYOUT
4x 0805 47uF
C812 47uF 4V 20% X6S 0805 COMMON
C815 47uF 4V 20% X6S 0805 COMMON
C925 47uF 4V 20% X6S 0805 COMMON
C924 47uF 4V 20% X6S 0805 COMMON
2x 0603 4.7uF
C766 4.7uF 6.3V 20% X6S 0603 COMMON
C914 4.7uF 6.3V 20% X6S 0603 COMMON
12x 0603 10uF
C824 10uF 4V 20% X6S 0603 COMMON
C767 10uF 4V 20% X6S 0603 COMMON
C750 10uF 4V 20% X6S 0603 COMMON
C805 10uF 4V 20% X6S 0603 COMMON
C759 10uF 4V 20% X6S 0603 COMMON
C751 10uF 4V 20% X6S 0603 COMMON
C927 10uF 4V 20% X6S 0603 COMMON
C944 10uF 4V 20% X6S 0603 COMMON
C928 10uF 4V 20% X6S 0603 COMMON
C776 10uF 4V 20% X6S 0603 COMMON
C915 10uF 4V 20% X6S 0603 COMMON
C804 10uF 4V 20% X6S 0603 COMMON
37 x 0402 1uF
C916 1uF 6.3V 10% X6S 0402 COMMON
C879 1uF 6.3V 10% X6S 0402 NO STUFF
C784 1uF 6.3V 10% X6S 0402 COMMON
C906 1uF 6.3V 10% X6S 0402 NO STUFF
C897 1uF 6.3V 10% X6S 0402 NO STUFF
C803 1uF 6.3V 10% X6S 0402 NO STUFF
C785 1uF 6.3V 10% X6S 0402 NO STUFF
C779 1uF 6.3V 10% X6S 0402 NO STUFF
C919 1uF 6.3V 10% X6S 0402 NO STUFF
C756 1uF 6.3V 10% X6S 0402 NO STUFF
C822 1uF 6.3V 10% X6S 0402 NO STUFF
C787 1uF 6.3V 10% X6S 0402 NO STUFF
C942 1uF 6.3V 10% X6S 0402 COMMON
C786 1uF 6.3V 10% X6S 0402 COMMON
C929 1uF 6.3V 10% X6S 0402 NO STUFF
C748 1uF 6.3V 10% X6S 0402 NO STUFF
C920 1uF 6.3V 10% X6S 0402 NO STUFF
C938 1uF 6.3V 10% X6S 0402 NO STUFF
C910 1uF 6.3V 10% X6S 0402 NO STUFF
C911 1uF 6.3V 10% X6S 0402 COMMON
C755 1uF 6.3V 10% X6S 0402 COMMON
C754 1uF 6.3V 10% X6S 0402 NO STUFF
C931 1uF 6.3V 10% X6S 0402 NO STUFF
C757 1uF 6.3V 10% X6S 0402 COMMON
C909 1uF 6.3V 10% X6S 0402 COMMON
C922 1uF 6.3V 10% X6S 0402 COMMON
C763 1uF 6.3V 10% X6S 0402 NO STUFF
C947 1uF 6.3V 10% X6S 0402 NO STUFF
C819 1uF 6.3V 10% X6S 0402 NO STUFF
C764 1uF 6.3V 10% X6S 0402 NO STUFF
C788 1uF 6.3V 10% X6S 0402 COMMON
C913 1uF 6.3V 10% X6S 0402 COMMON
C738 1uF 6.3V 10% X6S 0402 NO STUFF
C943 1uF 6.3V 10% X6S 0402 NO STUFF
C747 1uF 6.3V 10% X6S 0402 NO STUFF
C821 1uF 6.3V 10% X6S 0402 COMMON
C838 1uF 6.3V 10% X6S 0402 NO STUFF
UNDER GPU

ASSEMBLY	<ASSEMBLY_DESCRIPTION>
PAGE DETAIL	GPU DECOUPLING NVVDD

ALL NVIDIA DESIGN SPECIFICATIONS, REFERENCE SPECIFICATIONS, REFERENCE BOARDS, FILES, DRAWINGS, DIAGNOSTICS, LISTS AND OTHER DOCUMENTS OR INFORMATION (TOGETHER AND SEPARATELY, 'MATERIALS') ARE BEING PROVIDED 'AS IS'. THE MATERIALS MAY CONTAIN KNOWN AND UNKNOWN VIOLATIONS OR DEVIATIONS OF INDUSTRY STANDARDS AND SPECIFICATIONS. NVIDIA MAKES NO WARRANTIES, EXPRESSED, IMPLIED, STATUTORY OR OTHERWISE WITH RESPECT TO THE MATERIALS OR OTHERWISE, AND EXPRESSLY DISCLAIMS ALL IMPLIED WARRANTIES INCLUDING, WITHOUT LIMITATION, THE WARRANTIES OF DESIGN, OF NONINFRINGEMENT, MERCHANTABILITY OR FITNESS FOR A PARTICULAR PURPOSE, OR ARISING FROM A COURSE OF DEALING, TRADE USAGE, TRADE PRACTICE, OR INDUSTRY STANDARDS.

RD Center
Colorful Co.,Ltd
深圳市七彩虹科技发展有限公司

Size	Document Number	Rev
Custom	GA104H8-E10	A

Date: Tuesday, July 14, 2020 Sheet 19 of 57

Page20: GPU DECOUPLING NVVDD

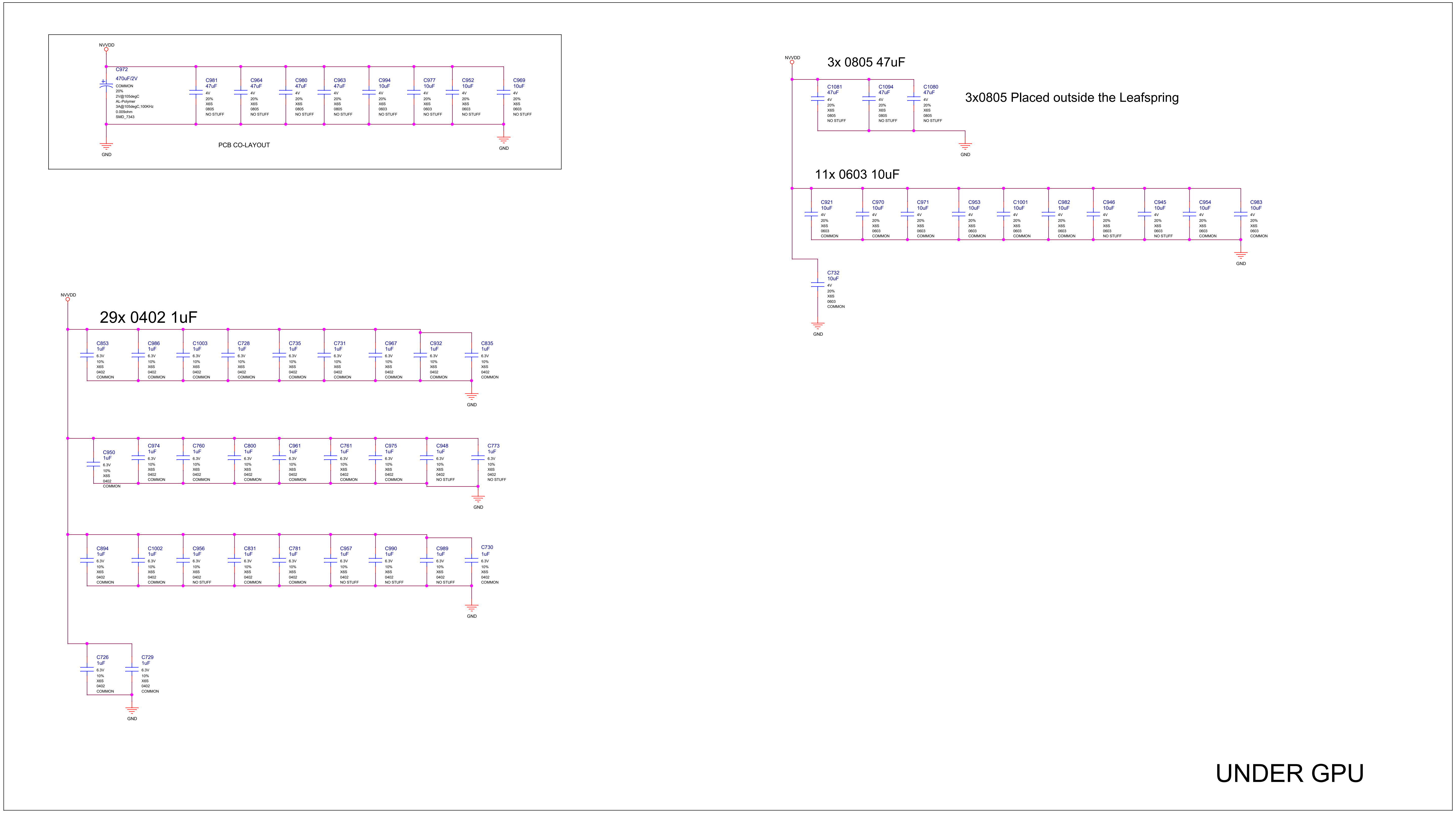
NVVDD
C972 470uF/2V COMMON 20% 2V@105degC AL-Polymer 3A@105degC,100KHz 0.009ohm SMD_7343
C981 47uF 4V 20% X6S 0805 NO STUFF
C964 47uF 4V 20% X6S 0805 NO STUFF
C980 47uF 4V 20% X6S 0805 NO STUFF
C963 47uF 4V 20% X6S 0805 NO STUFF
C994 10uF 4V 20% X6S 0603 NO STUFF
C977 10uF 4V 20% X6S 0603 NO STUFF
C952 10uF 4V 20% X6S 0603 NO STUFF
C969 10uF 4V 20% X6S 0603 NO STUFF
GND
PCB CO-LAYOUT
GND
NVVDD
3x 0805 47uF
C1081 47uF 4V 20% X6S 0805 NO STUFF
C1094 47uF 4V 20% X6S 0805 NO STUFF
C1080 47uF 4V 20% X6S 0805 NO STUFF
3x0805 Placed outside the Leafspring
GND
11x 0603 10uF
C921 10uF 4V 20% X6S 0603 COMMON
C970 10uF 4V 20% X6S 0603 COMMON
C971 10uF 4V 20% X6S 0603 COMMON
C953 10uF 4V 20% X6S 0603 COMMON
C1001 10uF 4V 20% X6S 0603 COMMON
C982 10uF 4V 20% X6S 0603 COMMON
C946 10uF 4V 20% X6S 0603 NO STUFF
C945 10uF 4V 20% X6S 0603 NO STUFF
C954 10uF 4V 20% X6S 0603 COMMON
C983 10uF 4V 20% X6S 0603 COMMON
GND
C732 10uF 4V 20% X6S 0603 COMMON
GND
NVVDD
29x 0402 1uF
C853 1uF 6.3V 10% X6S 0402 COMMON
C986 1uF 6.3V 10% X6S 0402 COMMON
C1003 1uF 6.3V 10% X6S 0402 COMMON
C728 1uF 6.3V 10% X6S 0402 COMMON
C735 1uF 6.3V 10% X6S 0402 COMMON
C731 1uF 6.3V 10% X6S 0402 COMMON
C967 1uF 6.3V 10% X6S 0402 COMMON
C932 1uF 6.3V 10% X6S 0402 COMMON
C835 1uF 6.3V 10% X6S 0402 COMMON
GND
C950 1uF 6.3V 10% X6S 0402 COMMON
C974 1uF 6.3V 10% X6S 0402 COMMON
C760 1uF 6.3V 10% X6S 0402 COMMON
C800 1uF 6.3V 10% X6S 0402 COMMON
C961 1uF 6.3V 10% X6S 0402 COMMON
C761 1uF 6.3V 10% X6S 0402 COMMON
C975 1uF 6.3V 10% X6S 0402 COMMON
C948 1uF 6.3V 10% X6S 0402 NO STUFF
C773 1uF 6.3V 10% X6S 0402 NO STUFF
GND
C894 1uF 6.3V 10% X6S 0402 COMMON
C1002 1uF 6.3V 10% X6S 0402 COMMON
C956 1uF 6.3V 10% X6S 0402 NO STUFF
C831 1uF 6.3V 10% X6S 0402 COMMON
C781 1uF 6.3V 10% X6S 0402 COMMON
C957 1uF 6.3V 10% X6S 0402 NO STUFF
C990 1uF 6.3V 10% X6S 0402 NO STUFF
C989 1uF 6.3V 10% X6S 0402 NO STUFF
C730 1uF 6.3V 10% X6S 0402 COMMON
GND
C726 1uF 6.3V 10% X6S 0402 COMMON
C729 1uF 6.3V 10% X6S 0402 COMMON
GND
UNDER GPU

ASSEMBLY	<ASSEMBLY_DESCRIPTION>
PAGE DETAIL	GPU DECOUPLING NVVDD

ALL NVIDIA DESIGN SPECIFICATIONS, REFERENCE SPECIFICATIONS, REFERENCE BOARDS, FILES, DRAWINGS, DIAGNOSTICS, LISTS AND OTHER DOCUMENTS OR INFORMATION (TOGETHER AND SEPARATELY, 'MATERIALS') ARE BEING PROVIDED 'AS IS'. THE MATERIALS MAY CONTAIN KNOWN AND UNKNOWN VIOLATIONS OR DEVIATIONS OF INDUSTRY STANDARDS AND SPECIFICATIONS. NVIDIA MAKES NO WARRANTIES, EXPRESSED, IMPLIED, STATUTORY OR OTHERWISE WITH RESPECT TO THE MATERIALS OR OTHERWISE, AND EXPRESSLY DISCLAIMS ALL IMPLIED WARRANTIES INCLUDING, WITHOUT LIMITATION, THE WARRANTIES OF DESIGN, OF NONINFRINGEMENT, MERCHANTABILITY OR FITNESS FOR A PARTICULAR PURPOSE, OR ARISING FROM A COURSE OF DEALING, TRADE USAGE, TRADE PRACTICE, OR INDUSTRY STANDARDS.

RD Center
Colorful Co.,Ltd
深圳市七彩虹科技发展有限公司

Size	Document Number	Rev
Custom	GA104H8-E10	A

Date: Tuesday, July 14, 2020 Sheet 20 of 57

Page21: IFPAB DVI-D-DL

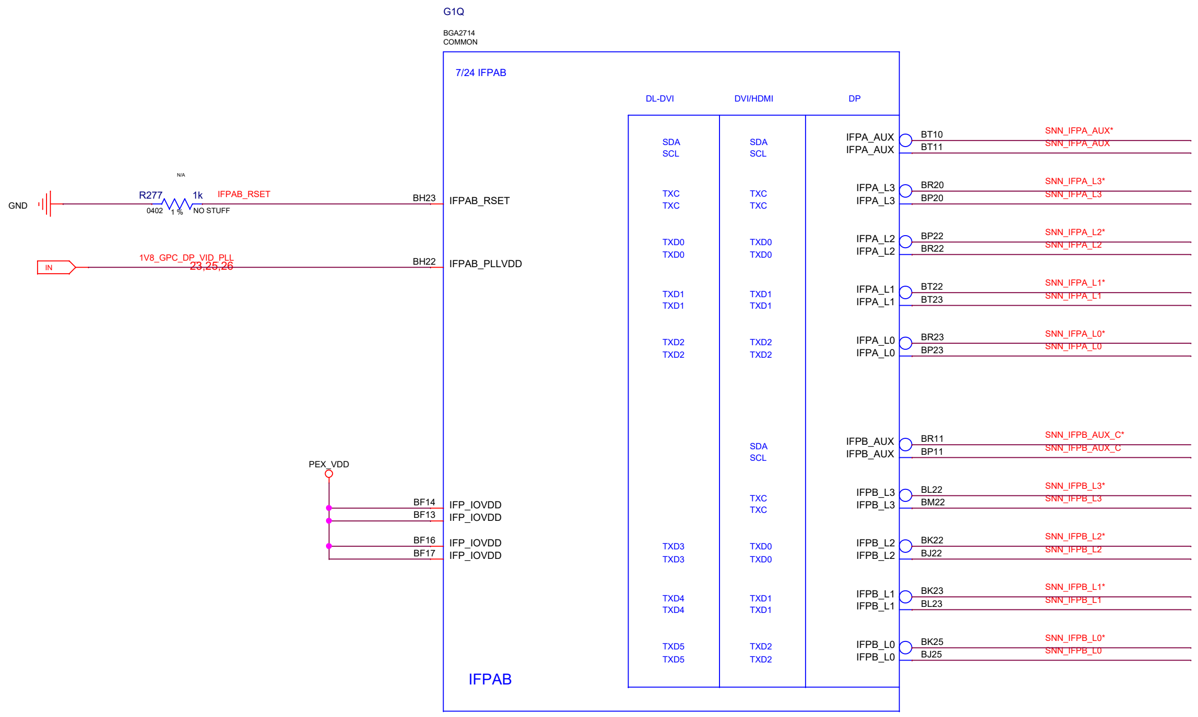
G1Q
BGA2714
COMMON
7/24 IFPAB
DL-DVI
DVI/HDMI
DP
GND
N/A
R277
1k
0402
1 %
NO STUFF
IFPAB_RSET
BH23
IFPAB_RSET
IN
1V8_GPC_DP_VID_PLL
23,25,26
BH22
IFPAB_PLLVDD
PEX_VDD
BF14
IFP_IOVDD
BF13
IFP_IOVDD
BF16
IFP_IOVDD
BF17
IFP_IOVDD
SDA
SCL
TXC
TXC
TXD0
TXD0
TXD1
TXD1
TXD2
TXD2
TXD3
TXD3
TXD4
TXD4
TXD5
TXD5
SDA
SCL
TXC
TXC
TXD0
TXD0
TXD1
TXD1
TXD2
TXD2
SDA
SCL
TXC
TXC
TXD0
TXD0
TXD1
TXD1
TXD2
TXD2
IFPA_AUX
IFPA_AUX
BT10
BT11
SNN_IFPA_AUX*
SNN_IFPA_AUX
IFPA_L3
IFPA_L3
BR20
BP20
SNN_IFPA_L3*
SNN_IFPA_L3
IFPA_L2
IFPA_L2
BP22
BR22
SNN_IFPA_L2*
SNN_IFPA_L2
IFPA_L1
IFPA_L1
BT22
BT23
SNN_IFPA_L1*
SNN_IFPA_L1
IFPA_L0
IFPA_L0
BR23
BP23
SNN_IFPA_L0*
SNN_IFPA_L0
IFPB_AUX
IFPB_AUX
BR11
BP11
SNN_IFPB_AUX_C*
SNN_IFPB_AUX_C
IFPB_L3
IFPB_L3
BL22
BM22
SNN_IFPB_L3*
SNN_IFPB_L3
IFPB_L2
IFPB_L2
BK22
BJ22
SNN_IFPB_L2*
SNN_IFPB_L2
IFPB_L1
IFPB_L1
BK23
BL23
SNN_IFPB_L1*
SNN_IFPB_L1
IFPB_L0
IFPB_L0
BK25
BJ25
SNN_IFPB_L0*
SNN_IFPB_L0
IFPAB

ASSEMBLY	<ASSEMBLY_DESCRIPTION>
PAGE DETAIL	IO: IFPAB NC

ALL NVIDIA DESIGN SPECIFICATIONS, REFERENCE SPECIFICATIONS, REFERENCE BOARDS, FILES, DRAWINGS, DIAGNOSTICS, LISTS AND OTHER DOCUMENTS OR INFORMATION (TOGETHER AND SEPARATELY, 'MATERIALS') ARE BEING PROVIDED 'AS IS'. THE MATERIALS MAY CONTAIN KNOWN AND UNKNOWN VIOLATIONS OR DEVIATIONS OF INDUSTRY STANDARDS AND SPECIFICATIONS. NVIDIA MAKES NO WARRANTIES, EXPRESSED, IMPLIED, STATUTORY OR OTHERWISE WITH RESPECT TO THE MATERIALS OR OTHERWISE, AND EXPRESSLY DISCLAIMS ALL IMPLIED WARRANTIES INCLUDING, WITHOUT LIMITATION, THE WARRANTIES OF DESIGN, OF NONINFRINGEMENT, MERCHANTABILITY OR FITNESS FOR A PARTICULAR PURPOSE, OR ARISING FROM A COURSE OF DEALING, TRADE USAGE, TRADE PRACTICE, OR INDUSTRY STANDARDS.

RD Center
Colorful Co.,Ltd
深圳市七彩虹科技发展有限公司

Size	Document Number	Rev
Custom	GA104H8-E10	A

Date: Monday, July 13, 2020 Sheet 21 of 57

Page22: IFPF DP

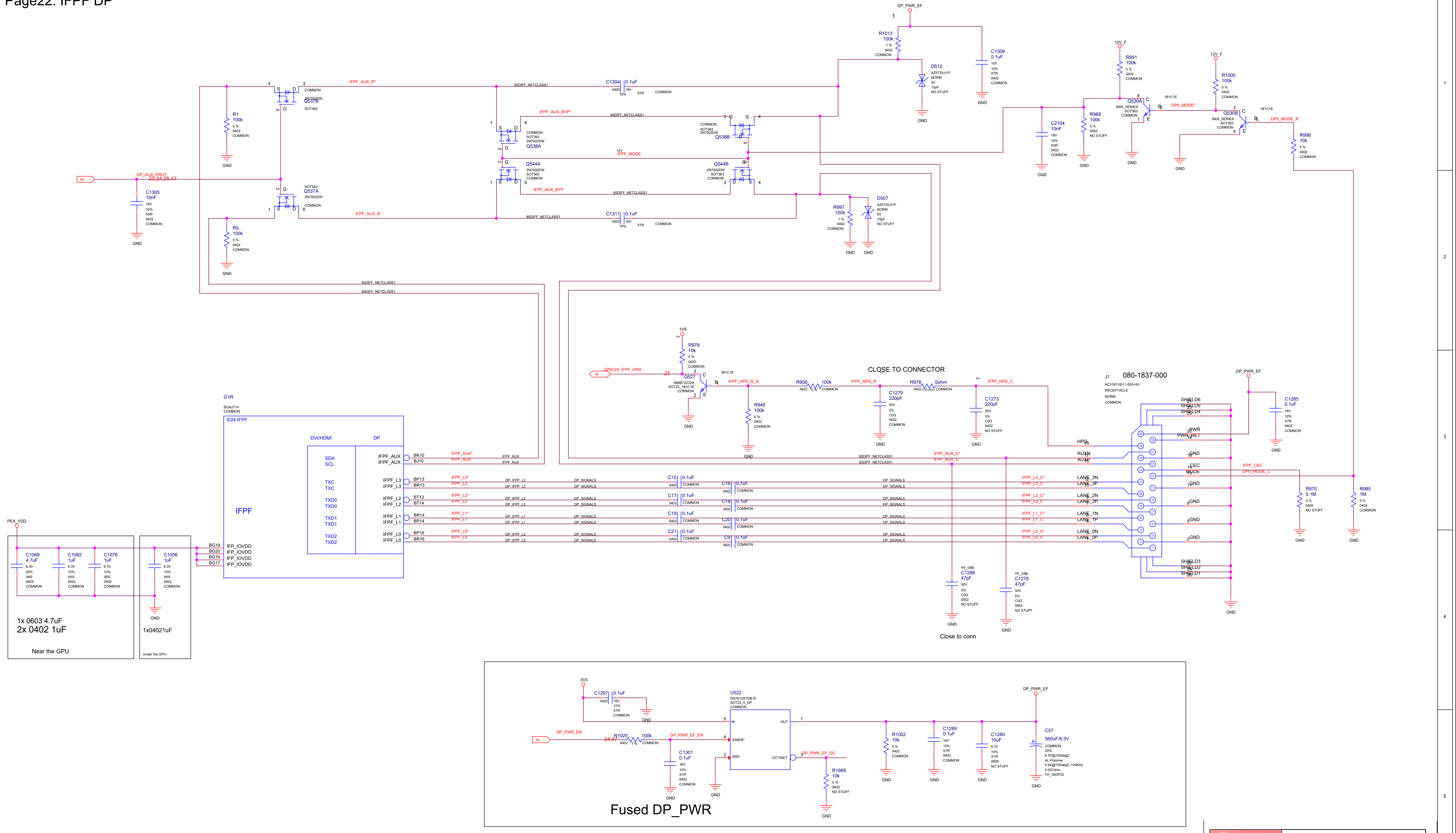

DP_PWR_EF
R1013 100k 1 % 0402 COMMON
D512 AZ5725-01F NORM 5V 10pF NO STUFF
C1309 0.1uF 16V 10% X7R 0402 COMMON
12V_F
R991 100k 5 % 0402 COMMON
R1000 100k 5 % 0402 COMMON
Q530A 3904_SERIES SOT363 COMMON
Q530B 3904_SERIES SOT363 COMMON
1B1C1E
DP0_MODE*
DP0_MODE_R
C2104 10nF 16V 10% X5R 0402 COMMON
R988 100k 5 % 0402 NO STUFF
R996 10k 5 % 0402 COMMON
IFPF_AUX_R*
85DIFF_NETCLASS1
C1304 0.1uF 0402 16V 10% X7R COMMON
Q537B 2N7002DW SOT363 COMMON
Q537A 2N7002DW SOT363 COMMON
R1 100k 5 % 0402 COMMON
R5 100k 5 % 0402 COMMON
IN
DP_AUX_PROT
23,24,25,47
C1305 10nF 16V 10% X5R 0402 COMMON
IFPF_AUX_BYP*
Q538A 2N7002DW SOT363 COMMON
Q538B 2N7002DW SOT363 COMMON
12V
IFPF_MODE
Q544A 2N7002DW SOT363 COMMON
Q544B 2N7002DW SOT363 COMMON
IFPF_AUX_BYP
IFPF_AUX_R
C1311 0.1uF 0402 16V 10% X7R COMMON
R997 100k 1 % 0402 COMMON
D507 AZ5725-01F NORM 5V 10pF NO STUFF
GND
1V8
R979 10k 5 % 0402 COMMON
GPIO24_IFPF_HPD
27
Q527 MMBT2222A SOT23_1B1C1E COMMON
IFPF_HPD_R_Q
R948 100k 5 % 0402 COMMON
R956 100k 0402 5 % COMMON
IFPF_HPD_R
CLOSE TO CONNECTOR
C1279 220pF 50V 5% C0G 0402 COMMON
R978 0ohm 0402 COMMON
IFPF_HPD_C
C1273 220pF 50V 5% C0G 0402 NO STUFF
J1 080-1837-000
AC3167-0011-005-HH RECEPTACLE NORM COMMON
C1285 0.1uF 16V 10% X7R 0402 COMMON
SHIELD6 SHIELD5 SHIELD4
PWR PWR_RET
HPD AUXN AUXP
GND CEC MODE
LANE_3N LANE_3P
LANE_2N LANE_2P
LANE_1N LANE_1P
LANE_0N LANE_0P
SHIELD3 SHIELD2 SHIELD1
IFPF_CEC
DP0_MODE_C
R970 5.1M 5 % 0402 NO STUFF
R985 1M 5 % 0402 COMMON
G1R BGA2714 COMMON
6/24 IFPF
IFPF
DVI/HDMI
DP
SDA SCL
TXC TXC
TXD0 TXD0
TXD1 TXD1
TXD2 TXD2
IFPF_AUX IFPF_AUX
IFPF_L3 IFPF_L3
IFPF_L2 IFPF_L2
IFPF_L1 IFPF_L1
IFPF_L0 IFPF_L0
BK10 BJ10 BP13 BR13 BT13 BT14 BR14 BP14 BP16 BR16
IFPF_AUX* IFPF_AUX
IFPF_L3* IFPF_L3
IFPF_L2* IFPF_L2
IFPF_L1* IFPF_L1
IFPF_L0* IFPF_L0
DP_IFPF_L3 DP_IFPF_L2 DP_IFPF_L1 DP_IFPF_L0
DP_SIGNALS
C15 C16 C17 C18 C19 C20 C21 C9 0.1uF 0402 COMMON
IFPF_AUX_C* IFPF_AUX_C
IFPF_L3_C* IFPF_L3_C
IFPF_L2_C* IFPF_L2_C
IFPF_L1_C* IFPF_L1_C
IFPF_L0_C* IFPF_L0_C
nv_cap C1288 47pF 50V 5% C0G 0402 NO STUFF
nv_cap C1278 47pF 50V 5% C0G 0402 NO STUFF
Close to conn
BG19 BG20 BG16 BG17
IFP_IOVDD
PEX_VDD
C1068 4.7uF 6.3V 20% X6S 0603 COMMON
C1082 1uF 6.3V 10% X6S 0402 COMMON
C1076 1uF 6.3V 10% X6S 0402 COMMON
C1006 1uF 6.3V 10% X6S 0402 COMMON
1x 0603 4.7uF
2x 0402 1uF
Near the GPU
1x04021uF
Under the GPU
3V3
C1297 0.1uF 0402 16V 10% X7R COMMON
U522 GS7615STDB-R SOT23_5_DP COMMON
IN OUT EN/EN* GND OC*/ISET
DP_PWR_EN
24,47
R1025 100k 0402 1 % COMMON
DP_PWR_EF_EN
C1301 0.1uF 16V 10% X7R 0402 COMMON
DP_PWR_EF_OC
R1669 10k 5 % 0402 NO STUFF
R1002 10k 5 % 0402 COMMON
C1289 0.1uF 16V 10% X7R 0402 COMMON
C1280 10uF 6.3V 10% X7R 0805 NO STUFF
C57 560uF/6.3V COMMON 20% 6.3V@105degC AL-Polymer 5.6A@105degC,100KHz 0.007ohm TH_D63P25
Fused DP_PWR

ASSEMBLY	<ASSEMBLY_DESCRIPTION>
PAGE DETAIL	IO: IFPF DP

ALL NVIDIA DESIGN SPECIFICATIONS, REFERENCE SPECIFICATIONS, REFERENCE BOARDS, FILES, DRAWINGS, DIAGNOSTICS, LISTS AND OTHER DOCUMENTS OR INFORMATION (TOGETHER AND SEPARATELY, 'MATERIALS') ARE BEING PROVIDED 'AS IS'. THE MATERIALS MAY CONTAIN KNOWN AND UNKNOWN VIOLATIONS OR DEVIATIONS OF INDUSTRY STANDARDS AND SPECIFICATIONS. NVIDIA MAKES NO WARRANTIES, EXPRESSED, IMPLIED, STATUTORY OR OTHERWISE WITH RESPECT TO THE MATERIALS OR OTHERWISE, AND EXPRESSLY DISCLAIMS ALL IMPLIED WARRANTIES INCLUDING, WITHOUT LIMITATION, THE WARRANTIES OF DESIGN, OF NONINFRINGEMENT, MERCHANTABILITY OR FITNESS FOR A PARTICULAR PURPOSE, OR ARISING FROM A COURSE OF DEALING, TRADE USAGE, TRADE PRACTICE, OR INDUSTRY STANDARDS.

RD Center
Colorful Co.,Ltd
深圳市七彩虹科技发展有限公司

Size	Document Number	Rev
Custom	GA104H8-E10	A

Date: Tuesday, July 14, 2020 Sheet 22 of 57

Page23: IFPE DP

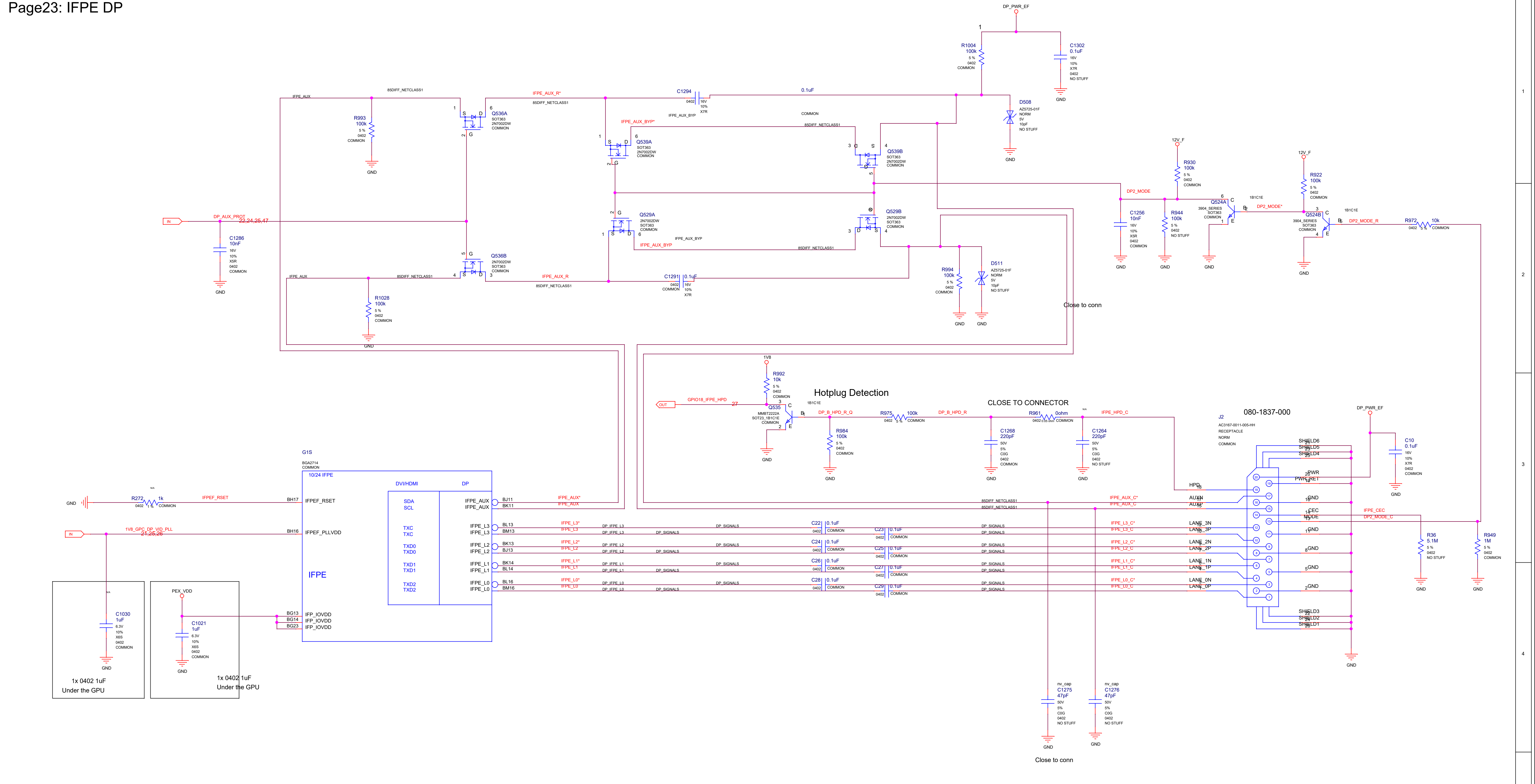
DP_PWR_EF
R1004 100k 5% 0402 COMMON
C1302 0.1uF 16V 10% X7R 0402 NO STUFF
D508 AZ5725-01F NORM 5V 10pF NO STUFF
C1294 0.1uF 0402 16V 10% X7R
IFPE_AUX
IFPE_AUX_R*
IFPE_AUX_BYP*
IFPE_AUX_BYP
IFPE_AUX_R
85DIFF_NETCLASS1
R993 100k 5% 0402 COMMON
Q536A SOT363 2N7002DW COMMON
Q536B 2N7002DW SOT363 COMMON
Q539A SOT363 2N7002DW COMMON
Q539B SOT363 2N7002DW COMMON
Q529A 2N7002DW SOT363 COMMON
Q529B 2N7002DW SOT363 COMMON
DP_AUX_PROT
22,24,26,47
IN
C1286 10nF 16V 10% X5R 0402 COMMON
R1028 100k 5% 0402 COMMON
C1291 0.1uF 0402 COMMON 16V 10% X7R
R994 100k 5% 0402 COMMON
D511 AZ5725-01F NORM 5V 10pF NO STUFF
Close to conn
12V_F
R930 100k 5% 0402 COMMON
R922 100k 5% 0402 COMMON
DP2_MODE
DP2_MODE*
DP2_MODE_R
C1256 10nF 16V 10% X5R 0402 COMMON
R944 100k 5% 0402 NO STUFF
Q524A 3904_SERIES SOT363 COMMON
Q524B 3904_SERIES SOT363 COMMON
1B1C1E
R972 10k 0402 5% COMMON
GND
1V8
R992 10k 5% 0402 COMMON
Hotplug Detection
GPIO18_IFPE_HPD
OUT
27
Q535 MMBT2222A SOT23_1B1C1E COMMON
DP_B_HPD_R_Q
R984 100k 5% 0402 COMMON
R975 100k 0402 5% COMMON
DP_B_HPD_R
CLOSE TO CONNECTOR
R961 0ohm 0402 COMMON
IFPE_HPD_C
C1268 220pF 50V 5% C0G 0402 COMMON
C1264 220pF 50V 5% C0G 0402 NO STUFF
J2 AC3167-0011-005-HH RECEPTACLE NORM COMMON
080-1837-000
SHIELD6 SHIELD5 SHIELD4 SHIELD3 SHIELD2 SHIELD1
PWR PWR_RET HPD AUXN AUXP GND CEC MODE
LANE_3N LANE_3P LANE_2N LANE_2P LANE_1N LANE_1P LANE_0N LANE_0P
C10 0.1uF 16V 10% X7R 0402 COMMON
IFPE_CEC
DP2_MODE_C
R36 5.1M 5% 0402 NO STUFF
R949 1M 5% 0402 COMMON
G1S BGA2714 COMMON
10/24 IFPE
DVI/HDMI
DP
SDA SCL TXC TXC TXD0 TXD0 TXD1 TXD1 TXD2 TXD2
IFPE
IFPEF_RSET
IFPEF_PLLVDD
IFP_IOVDD
IFPE_AUX
IFPE_L3 IFPE_L2 IFPE_L1 IFPE_L0
BH17 BH16 BG13 BG14 BG23
BJ11 BK11 BL13 BM13 BK13 BJ13 BK14 BL14 BL16 BM16
IFPE_AUX* IFPE_AUX
IFPE_L3* IFPE_L3 IFPE_L2* IFPE_L2 IFPE_L1* IFPE_L1 IFPE_L0* IFPE_L0
DP_IFPE_L3 DP_IFPE_L2 DP_IFPE_L1 DP_IFPE_L0
DP_SIGNALS
C22 C23 C24 C25 C26 C27 C28 C29 0.1uF 0402 COMMON
IFPE_AUX_C* IFPE_AUX_C
IFPE_L3_C* IFPE_L3_C IFPE_L2_C* IFPE_L2_C IFPE_L1_C* IFPE_L1_C IFPE_L0_C* IFPE_L0_C
R272 1k 0402 1% COMMON
IFPEF_RSET
1V8_GPC_DP_VID_PLL
21,25,26
C1030 1uF 6.3V 10% X6S 0402 COMMON
1x 0402 1uF
Under the GPU
PEX_VDD
C1021 1uF 6.3V 10% X6S 0402 COMMON
1x 0402 1uF
Under the GPU
nv_cap C1275 47pF 50V 5% C0G 0402 NO STUFF
nv_cap C1276 47pF 50V 5% C0G 0402 NO STUFF
Close to conn

ASSEMBLY	<ASSEMBLY_DESCRIPTION>
PAGE DETAIL	IO: IFPE DP

ALL NVIDIA DESIGN SPECIFICATIONS, REFERENCE SPECIFICATIONS, REFERENCE BOARDS, FILES, DRAWINGS, DIAGNOSTICS, LISTS AND OTHER DOCUMENTS OR INFORMATION (TOGETHER AND SEPARATELY, 'MATERIALS') ARE BEING PROVIDED 'AS IS'. THE MATERIALS MAY CONTAIN KNOWN AND UNKNOWN VIOLATIONS OR DEVIATIONS OF INDUSTRY STANDARDS AND SPECIFICATIONS. NVIDIA MAKES NO WARRANTIES, EXPRESSED, IMPLIED, STATUTORY OR OTHERWISE WITH RESPECT TO THE MATERIALS OR OTHERWISE, AND EXPRESSLY DISCLAIMS ALL IMPLIED WARRANTIES INCLUDING, WITHOUT LIMITATION, THE WARRANTIES OF DESIGN, OF NONINFRINGEMENT, MERCHANTABILITY OR FITNESS FOR A PARTICULAR PURPOSE, OR ARISING FROM A COURSE OF DEALING, TRADE USAGE, TRADE PRACTICE, OR INDUSTRY STANDARDS.

RD Center
Colorful Co.,Ltd
深圳市七彩虹科技发展有限公司

Size	Document Number	Rev
Custom	GA104H8-E10	A

Date: Monday, July 13, 2020 Sheet 23 of 57

Page24: IFPD DP

1. DP AUX to DP connector: AUX AC coupled

2. DP AUX to DP-DVI dongle: AUX pass through

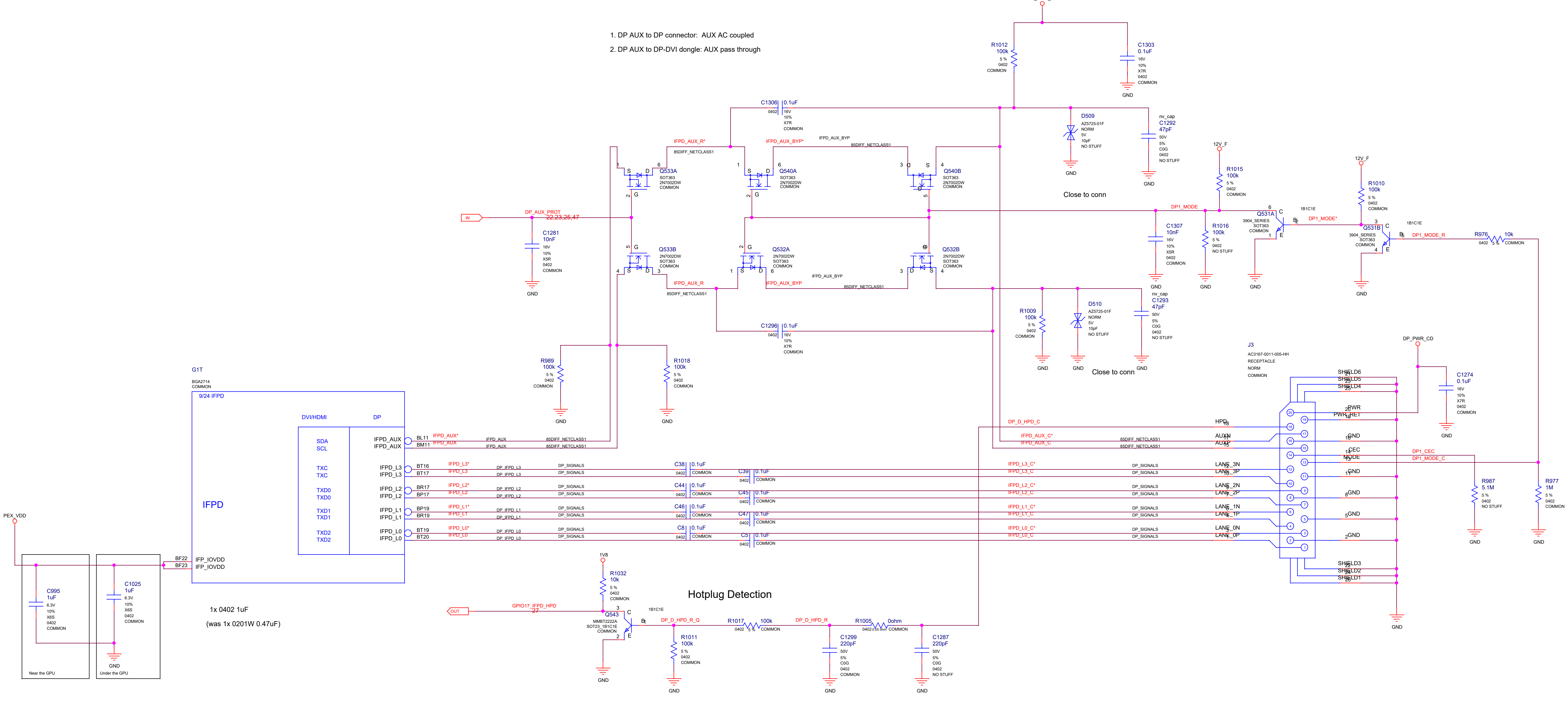
DP_PWR_CD
R1012 100k 5 % 0402 COMMON
C1303 0.1uF 16V 10% X7R 0402 COMMON
GND
C1306 0.1uF 0402 16V 10% X7R COMMON
D509 AZ5725-01F NORM 5V 10pF NO STUFF
nv_cap C1292 47pF 50V 5% C0G 0402 NO STUFF
Close to conn
IFPD_AUX_R*
85DIFF_NETCLASS1
IFPD_AUX_BYP*
IFPD_AUX_BYP
Q533A SOT363 2N7002DW COMMON
Q540A SOT363 2N7002DW COMMON
Q540B SOT363 2N7002DW COMMON
IN
DP_AUX_PROT 22,23,25,47
C1281 10nF 16V 10% X5R 0402 COMMON
Q533B 2N7002DW SOT363 COMMON
Q532A 2N7002DW SOT363 COMMON
Q532B 2N7002DW SOT363 COMMON
IFPD_AUX_R
IFPD_AUX_BYP
12V_F
R1015 100k 5 % 0402 COMMON
DP1_MODE
C1307 10nF 16V 10% X5R 0402 COMMON
R1016 100k 5 % 0402 NO STUFF
Q531A 3904_SERIES SOT363 COMMON
1B1C1E
DP1_MODE*
R1010 100k 5 % 0402 COMMON
Q531B 3904_SERIES SOT363 COMMON
DP1_MODE_R
R976 10k 0402 5 % COMMON
C1296 0.1uF 0402 16V 10% X7R COMMON
R1009 100k 5 % 0402 COMMON
D510 AZ5725-01F NORM 5V 10pF NO STUFF
nv_cap C1293 47pF 50V 5% C0G 0402 NO STUFF
Close to conn
J3 AC3167-0011-005-HH RECEPTACLE NORM COMMON
DP_PWR_CD
C1274 0.1uF 16V 10% X7R 0402 COMMON
SHIELD6 SHIELD5 SHIELD4
PWR PWR_RET
HPD
AUXN AUXP
CEC MODE
LANE_3N LANE_3P LANE_2N LANE_2P LANE_1N LANE_1P LANE_0N LANE_0P
GND
SHIELD3 SHIELD2 SHIELD1
DP_D_HPD_C
IFPD_AUX_C* IFPD_AUX_C
IFPD_L3_C* IFPD_L3_C IFPD_L2_C* IFPD_L2_C IFPD_L1_C* IFPD_L1_C IFPD_L0_C* IFPD_L0_C
DP_SIGNALS
DP1_CEC
DP1_MODE_C
R987 5.1M 5 % 0402 NO STUFF
R977 1M 5 % 0402 COMMON
R989 100k 5 % 0402 COMMON
R1018 100k 5 % 0402 COMMON
G1T BGA2714 COMMON
9/24 IFPD
IFPD
DVI/HDMI
DP
SDA SCL TXC TXC TXD0 TXD0 TXD1 TXD1 TXD2 TXD2
IFPD_AUX IFPD_AUX IFPD_L3 IFPD_L3 IFPD_L2 IFPD_L2 IFPD_L1 IFPD_L1 IFPD_L0 IFPD_L0
BL11 BM11 BT16 BT17 BR17 BP17 BP19 BR19 BT19 BT20
IFPD_AUX* IFPD_AUX
IFPD_L3* IFPD_L3 IFPD_L2* IFPD_L2 IFPD_L1* IFPD_L1 IFPD_L0* IFPD_L0
DP_IFPD_L3 DP_IFPD_L2 DP_IFPD_L1 DP_IFPD_L0
C38 0.1uF 0402 COMMON
C39 0.1uF 0402 COMMON
C44 0.1uF 0402 COMMON
C45 0.1uF 0402 COMMON
C46 0.1uF 0402 COMMON
C47 0.1uF 0402 COMMON
C8 0.1uF 0402 COMMON
C5 0.1uF 0402 COMMON
PEX_VDD
BF22 BF23
IFP_IOVDD IFP_IOVDD
C995 1uF 6.3V 10% X6S 0402 COMMON
C1025 1uF 6.3V 10% X6S 0402 COMMON
Near the GPU
Under the GPU
1x 0402 1uF
(was 1x 0201W 0.47uF)
Hotplug Detection
1V8
R1032 10k 5 % 0402 COMMON
OUT
GPIO17_IFPD_HPD 27
Q543 MMBT2222A SOT23_1B1C1E COMMON
DP_D_HPD_R_Q
R1011 100k 5 % 0402 COMMON
R1017 100k 0402 5 % COMMON
DP_D_HPD_R
R1005 0ohm 0402 0.05 ohm COMMON
C1299 220pF 50V 5% C0G 0402 COMMON
C1287 220pF 50V 5% C0G 0402 NO STUFF

Fused DP_PWR

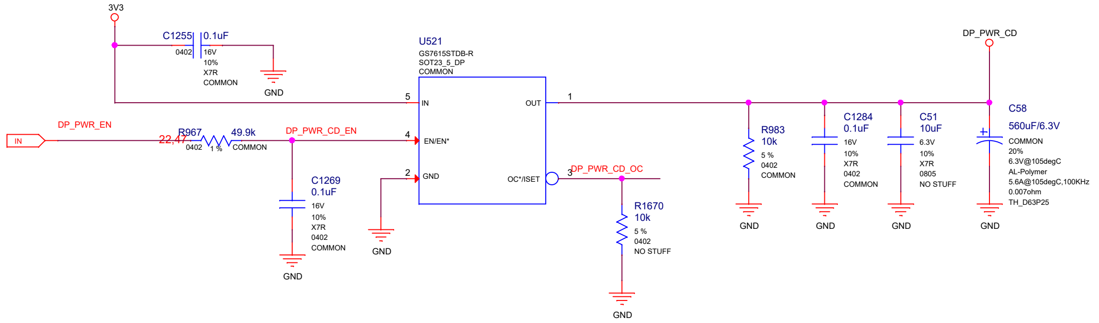
3V3
C1255 0.1uF 0402 16V 10% X7R COMMON
GND
U521 GS7615STDB-R SOT23_5_DP COMMON
IN OUT EN/EN* GND OC*/ISET
IN
DP_PWR_EN 22,47
R967 49.9k 0402 1 % COMMON
DP_PWR_CD_EN
C1269 0.1uF 16V 10% X7R 0402 COMMON
DP_PWR_CD_OC
R1670 10k 5 % 0402 NO STUFF
DP_PWR_CD
R983 10k 5 % 0402 COMMON
C1284 0.1uF 16V 10% X7R 0402 COMMON
C51 10uF 6.3V 10% X7R 0805 NO STUFF
C58 560uF/6.3V COMMON 20% 6.3V@105degC AL-Polymer 5.6A@105degC,100KHz 0.007ohm TH_D63P25

ASSEMBLY <ASSEMBLY_DESCRIPTION>
PAGE DETAIL

ALL NVIDIA DESIGN SPECIFICATIONS, REFERENCE SPECIFICATIONS, REFERENCE BOARDS, FILES, DRAWINGS, DIAGNOSTICS, LISTS AND OTHER DOCUMENTS OR INFORMATION (TOGETHER AND SEPARATELY, 'MATERIALS') ARE BEING PROVIDED 'AS IS'. THE MATERIALS MAY CONTAIN KNOWN AND UNKNOWN VIOLATIONS OR DEVIATIONS OF INDUSTRY STANDARDS AND SPECIFICATIONS. NVIDIA MAKES NO WARRANTIES, EXPRESSED, IMPLIED, STATUTORY OR OTHERWISE WITH RESPECT TO THE MATERIALS OR OTHERWISE, AND EXPRESSLY DISCLAIMS ALL IMPLIED WARRANTIES INCLUDING, WITHOUT LIMITATION, THE WARRANTIES OF DESIGN, OF NONINFRINGEMENT, MERCHANTABILITY OR FITNESS FOR A PARTICULAR PURPOSE, OR ARISING FROM A COURSE OF DEALING, TRADE USAGE, TRADE PRACTICE, OR INDUSTRY STANDARDS.

IO: IFPD DP

RD Center
Colorful Co.,Ltd
深圳市七彩虹科技发展有限公司

Size	Document Number	Rev
Custom	GA104H8-E10	A

Date: Tuesday, July 14, 2020 Sheet 24 of 57

27-JUN-2020

Page25: IFPC HDMI/DP

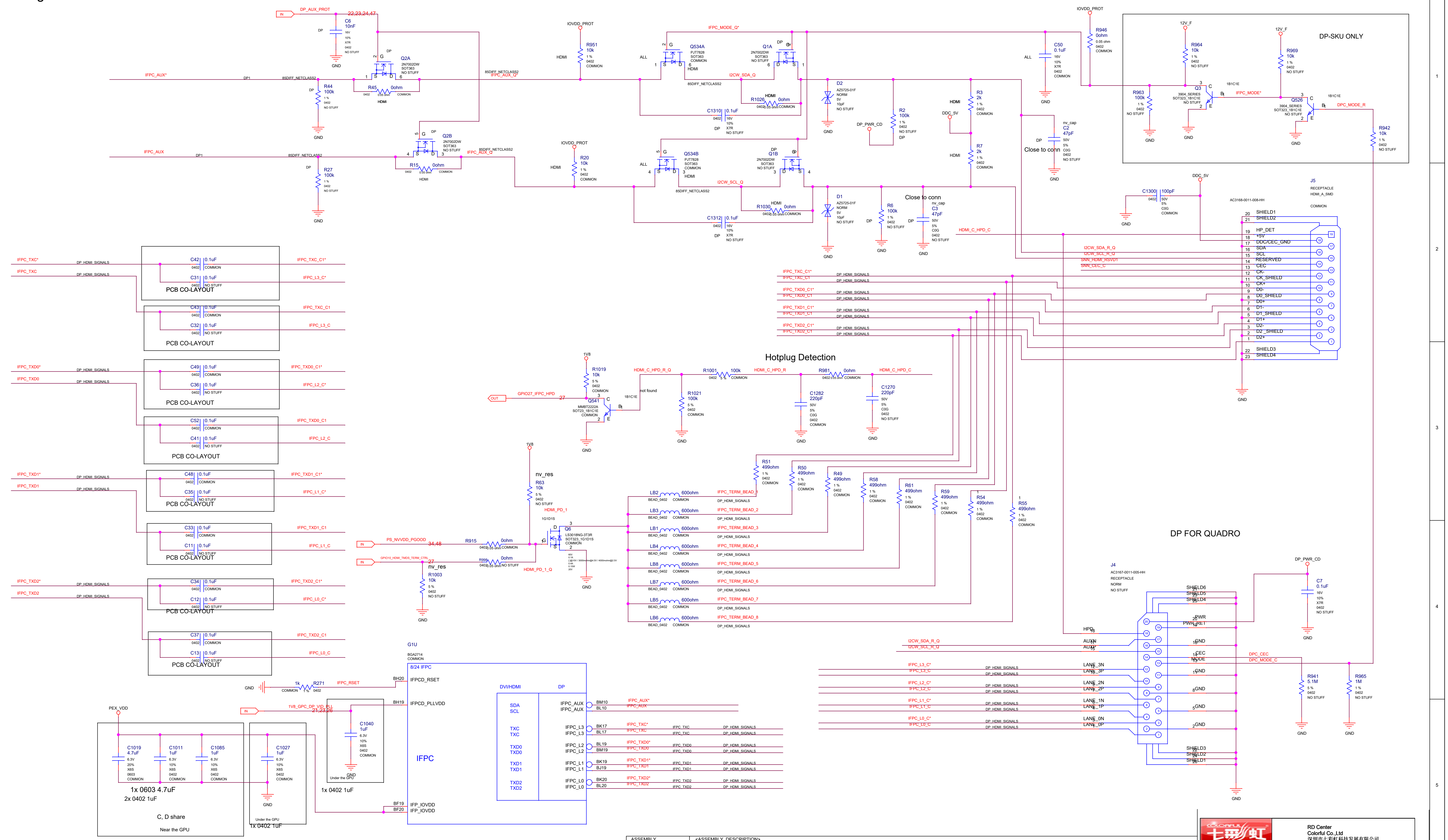

DP_AUX_PROT
22,23,24,47
C6 10nF
Q2A 2N7002DW SOT363 NO STUFF
IFPC_AUX*
IFPC_AUX
85DIFF_NETCLASS2
R45 0ohm
R44 100k
R27 100k
Q2B 2N7002DW SOT363 NO STUFF
R15 0ohm
IFPC_AUX_Q*
IFPC_AUX_Q
IOVDD_PROT
R951 10k
R20 10k
IFPC_MODE_Q*
Q534A PJT7828 SOT363 COMMON
Q534B PJT7828 SOT363 COMMON
Q1A 2N7002DW SOT363 NO STUFF
Q1B 2N7002DW SOT363 NO STUFF
I2CW_SDA_Q
I2CW_SCL_Q
R1026 0ohm
R1030 0ohm
C1310 0.1uF
C1312 0.1uF
D2 AZ5725-01F
D1 AZ5725-01F
R2 100k
R6 100k
DP_PWR_CD
DDC_5V
R3 2k
R7 2k
C2 47pF
C3 47pF
Close to conn
C50 0.1uF
R946 0ohm
DP-SKU ONLY
12V_F
R964 10k
R969 10k
R963 100k
Q3 3904_SERIES SOT323_1B1C1E NO STUFF
Q526 3904_SERIES SOT323_1B1C1E NO STUFF
IFPC_MODE*
DPC_MODE_R
R942 10k
C1300 100pF
J5 RECEPTACLE HDMI_A_SMD COMMON AC3168-0011-008-HH
SHIELD1 SHIELD2 HP_DET +5V DDC/CEC_GND SDA SCL RESERVED CEC CK- CK_SHIELD CK+ D0- D0_SHIELD D0+ D1- D1_SHIELD D1+ D2- D2_SHIELD D2+ SHIELD3 SHIELD4
HDMI_C_HPD_C
I2CW_SDA_R_Q
I2CW_SCL_R_Q
SNN_HDMI_RSVD1
SNN_CEC_C
IFPC_TXC* IFPC_TXC
IFPC_TXD0* IFPC_TXD0
IFPC_TXD1* IFPC_TXD1
IFPC_TXD2* IFPC_TXD2
DP_HDMI_SIGNALS
C42 0.1uF C31 0.1uF C43 0.1uF C32 0.1uF
C49 0.1uF C36 0.1uF C52 0.1uF C41 0.1uF
C48 0.1uF C35 0.1uF C33 0.1uF C11 0.1uF
C34 0.1uF C12 0.1uF C37 0.1uF C13 0.1uF
PCB CO-LAYOUT
IFPC_TXC_C1* IFPC_L3_C* IFPC_TXC_C1 IFPC_L3_C
IFPC_TXD0_C1* IFPC_L2_C* IFPC_TXD0_C1 IFPC_L2_C
IFPC_TXD1_C1* IFPC_L1_C* IFPC_TXD1_C1 IFPC_L1_C
IFPC_TXD2_C1* IFPC_L0_C* IFPC_TXD2_C1 IFPC_L0_C
Hotplug Detection
1V8
R1019 10k
Q541 MMBT2222A SOT23_1B1C1E COMMON
GPIO27_IFPC_HPD
HDMI_C_HPD_R_Q
R1001 100k
HDMI_C_HPD_R
R981 0ohm
R1021 100k
C1282 220pF
C1270 220pF
not found
nv_res
R63 10k
HDMI_PD_1
Q6 LS3018NG-3T3R SOT323_1G1D1S COMMON
PS_NVVDD_PGOOD 34,48
R915 0ohm
GPIO10_HDMI_TMDS_TERM_CTRL 27
R1003 10k
R969 0ohm
HDMI_PD_1_Q
R51 499ohm R50 499ohm R49 499ohm R58 499ohm R61 499ohm R59 499ohm R54 499ohm R55 499ohm
LB2 LB3 LB1 LB4 LB8 LB7 LB5 LB6 600ohm BEAD_0402
IFPC_TERM_BEAD_1 … IFPC_TERM_BEAD_8
DP FOR QUADRO
J4 AC3167-0011-005-HH RECEPTACLE NORM NO STUFF
SHIELD6 SHIELD5 SHIELD4 PWR PWR_RET HPD GND AUXN AUXP CEC MODE LANE_3N LANE_3P LANE_2N LANE_2P LANE_1N LANE_1P LANE_0N LANE_0P SHIELD3 SHIELD2 SHIELD1
DP_PWR_CD
C7 0.1uF
DPC_CEC
DPC_MODE_C
R941 5.1M
R965 1M
G1U BGA2714 COMMON
8/24 IFPC
IFPCD_RSET
IFPCD_PLLVDD
DVI/HDMI DP
SDA SCL TXC TXC TXD0 TXD0 TXD1 TXD1 TXD2 TXD2
IFPC_AUX IFPC_AUX
IFPC_L3 IFPC_L3 IFPC_L2 IFPC_L2 IFPC_L1 IFPC_L1 IFPC_L0 IFPC_L0
IFPC
IFP_IOVDD IFP_IOVDD
R271 1k
IFPC_RSET
1V8_GPC_DP_VID_PLL 21,23,26
C1040 1uF
Under the GPU
1x 0402 1uF
PEX_VDD
C1019 4.7uF C1011 1uF C1085 1uF C1027 1uF
1x 0603 4.7uF
2x 0402 1uF
C, D share
Near the GPU
1x 0402 1uF
GND

ASSEMBLY	<ASSEMBLY_DESCRIPTION>
PAGE DETAIL	IO: IFPC HDMI/DP

RD Center
Colorful Co.,Ltd
深圳市七彩虹科技发展有限公司

Size	Document Number	Rev
Custom	GA104H8-E10	A
Date:	Tuesday, July 14, 2020	Sheet 25 of 57

ALL NVIDIA DESIGN SPECIFICATIONS, REFERENCE SPECIFICATIONS, REFERENCE BOARDS, FILES, DRAWINGS, DIAGNOSTICS, LISTS AND OTHER DOCUMENTS OR INFORMATION (TOGETHER AND SEPARATELY, 'MATERIALS') ARE BEING PROVIDED 'AS IS'. THE MATERIALS MAY CONTAIN KNOWN AND UNKNOWN VIOLATIONS OR DEVIATIONS OF INDUSTRY STANDARDS AND SPECIFICATIONS. NVIDIA MAKES NO WARRANTIES, EXPRESSED, IMPLIED, STATUTORY OR OTHERWISE WITH RESPECT TO THE MATERIALS OR OTHERWISE, AND EXPRESSLY DISCLAIMS ALL IMPLIED WARRANTIES INCLUDING, WITHOUT LIMITATION, THE WARRANTIES OF NONINFRINGEMENT, MERCHANTABILITY OR FITNESS FOR A PARTICULAR PURPOSE, OR ARISING FROM A COURSE OF DEALING, TRADE USAGE, TRADE PRACTICE, OR INDUSTRY STANDARDS.

Page26: MISC2: ROM, XTAL, Straps

STRAP2	STRAP1	STRAP0	RAMCFG[4:0]	
L	L	L	00000	RAMCFG SAMSUNG 8Gb 7GHz
L	L	H	00001	RAMCFG MICRON 8Gb 7GHz
L	H	L	00010	RAMCFG HYNIX 8Gb 7GHz
H	H	L	00110	RAMCFG SAMSUNG 16Gb 8GHz
		TBD		

H=High :Tied to 1.8V
M=Middle:Tied to 0.9V
L=Low :Tied to 0V

JU1按下高频 Pin(1,2) 相连 BIOS2(U16)
JU1弹起 低频Pin(2,3) 相连 BIOS1(U10828)

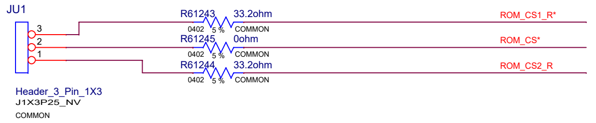
JU1
3
2
1
Header_3_Pin_1X3
J1X3P25_NV
COMMON
R61243 33.2ohm 0402 5% COMMON
R61245 0ohm 0402 5% COMMON
R61244 33.2ohm 0402 5% COMMON
ROM_CS1_R*
ROM_CS*
ROM_CS2_R

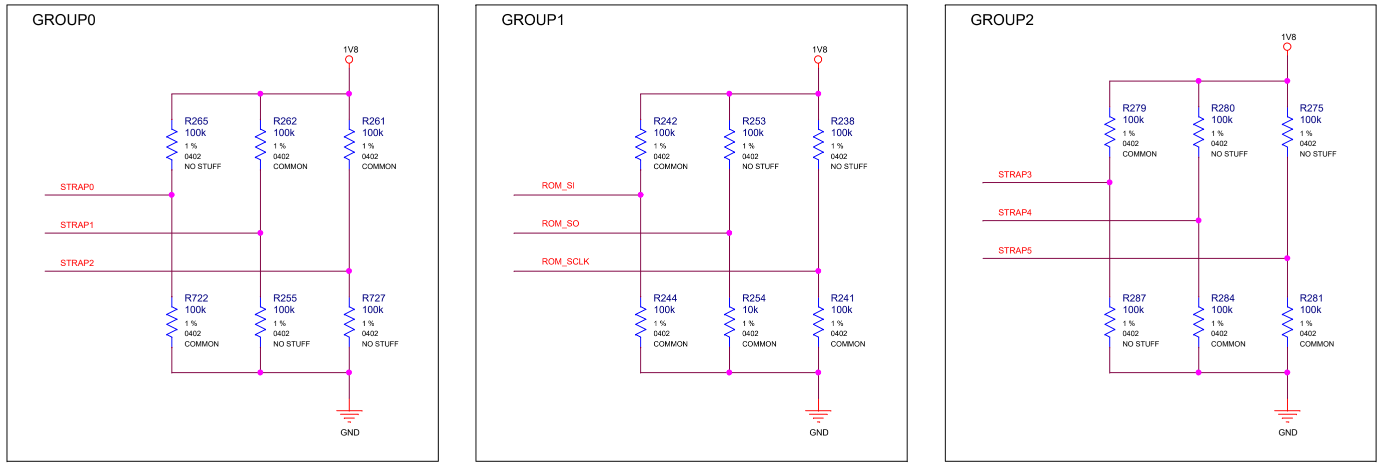
GROUP0
GROUP1
GROUP2
1V8
R265 100k 1 % 0402 NO STUFF
R262 100k 1 % 0402 COMMON
R261 100k 1 % 0402 COMMON
STRAP0
STRAP1
STRAP2
R722 100k 1 % 0402 COMMON
R255 100k 1 % 0402 NO STUFF
R727 100k 1 % 0402 NO STUFF
R242 100k 1 % 0402 COMMON
R253 100k 1 % 0402 NO STUFF
R238 100k 1 % 0402 NO STUFF
ROM_SI
ROM_SO
ROM_SCLK
R244 100k 1 % 0402 COMMON
R254 10k 1 % 0402 COMMON
R241 100k 1 % 0402 COMMON
R279 100k 1 % 0402 COMMON
R280 100k 1 % 0402 NO STUFF
R275 100k 1 % 0402 NO STUFF
STRAP3
STRAP4
STRAP5
R287 100k 1 % 0402 NO STUFF
R284 100k 1 % 0402 COMMON
R281 100k 1 % 0402 COMMON
GND

ROM_SO	ROM_SI	ROM_SCLK	SMARTFAN[2:0],FS_OVERT	1:ENABLE 0:DISABLE	
H	H	H	0111	FS_OVERT ENABLE	DEFAULT
H	H	M	0000	FS_OVERT DISABLE	

STRAP5	STRAP4	STRAP3	SMB_ALT_ADDR	DEVID_SEL	PCIE_CFG	VGA_DEVICE
M	H	H	1	1	1	1
M	H	L	1	1	1	0
M	L	H	1	1	0	1
M	L	L	1	1	0	0
L	H	M	1	0	1	1
L	M	H	1	0	1	0
L	M	L	1	0	0	1
L	L	M	1	0	0	0
H	H	H	0	1	1	1
H	H	L	0	1	1	0
H	L	H	0	1	0	1
H	L	L	0	1	0	0
L	H	H	0	0	1	1
L	H	L	0	0	1	0
L	L	H	0	0	0	1 DEFAULT
L	L	L	0	0	0	0

H=High :Tied to 1.8V
M=Middle:Tied to 0.9V
L=Low :Tied to 0V

1:SMB_ALT_ADDR ENABLE
0:SMB_ALT_ADDR DISABLE

1:DEVID_SEL REBRAND
0:DEVID_SEL ORIGNAL

1:PCIE_CFG LOW POWER
0:PCIE_CFG HIGH POWER

1:VGA_DEVICE ENABLE
0:VGA_DEVICE DISABLE

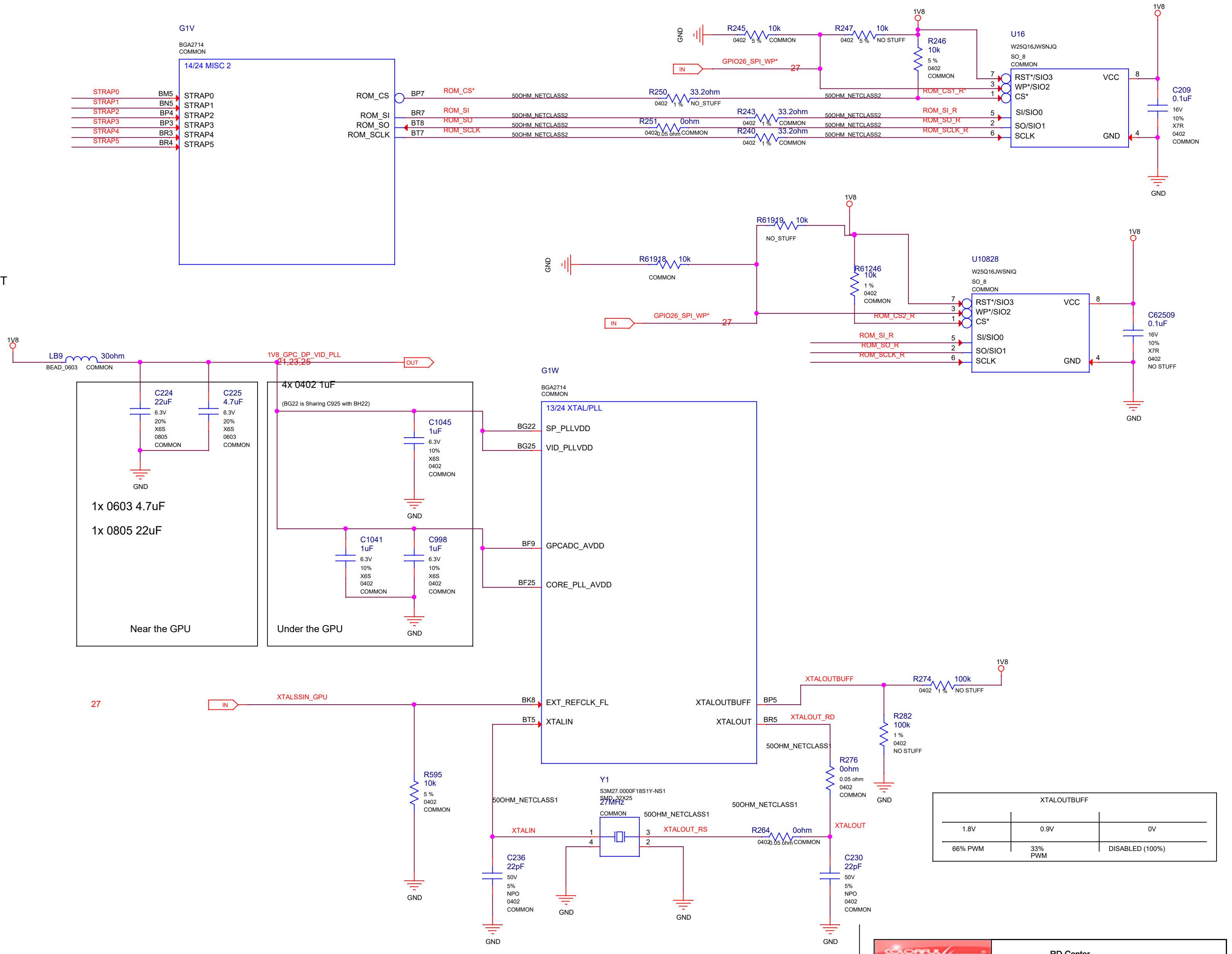
G1V
BGA2714
COMMON
14/24 MISC 2
STRAP0
STRAP1
STRAP2
STRAP3
STRAP4
STRAP5
BM5
BN5
BP4
BP3
BR3
BR4
ROM_CS
ROM_SI
ROM_SO
ROM_SCLK
BP7
BR7
BT8
BT7
ROM_CS*
ROM_SI
ROM_SO
ROM_SCLK
50OHM_NETCLASS2
R250 33.2ohm 0402 5% NO_STUFF
R251 0ohm 0402 0.05 ohm COMMON
R243 33.2ohm 0402 1% COMMON
R240 33.2ohm 0402 1% COMMON
GND
R245 10k 0402 5% COMMON
R247 10k 0402 5% NO STUFF
1V8
R246 10k 5 % 0402 COMMON
IN
GPIO26_SPI_WP*
27
U16
W25Q16JWSNIQ
SO_8
COMMON
RST*/SIO3
WP*/SIO2
CS*
SI/SIO0
SO/SIO1
SCLK
VCC
GND
ROM_CS1_R*
ROM_SI_R
ROM_SO_R
ROM_SCLK_R
C209 0.1uF 16V 10% X7R 0402 COMMON
R61919 10k NO_STUFF
R61918 10k COMMON
R61246 10k 1 % 0402 COMMON
GPIO26_SPI_WP*
U10828
W25Q16JWSNIQ
SO_8
COMMON
ROM_CS2_R
C62509 0.1uF 16V 10% X7R 0402 NO STUFF
LB9 30ohm BEAD_0603 COMMON
1V8_GPC_DP_VID_PLL
21,23,26
OUT
C224 22uF 6.3V 20% X6S 0805 COMMON
C225 4.7uF 6.3V 20% X6S 0603 COMMON
1x 0603 4.7uF
1x 0805 22uF
Near the GPU
4x 0402 1uF
(BG22 is Sharing C925 with BH22)
C1045 1uF 6.3V 10% X6S 0402 COMMON
C1041 1uF 6.3V 10% X6S 0402 COMMON
C998 1uF 6.3V 10% X6S 0402 COMMON
Under the GPU
G1W
BGA2714
COMMON
13/24 XTAL/PLL
BG22
BG25
BF9
BF25
SP_PLLVDD
VID_PLLVDD
GPCADC_AVDD
CORE_PLL_AVDD
27
XTALSSIN_GPU
BK8
BT5
EXT_REFCLK_FL
XTALIN
XTALOUTBUFF
XTALOUT
BP5
BR5
XTALOUTBUFF
XTALOUT_RD
R274 100k 0402 1% NO STUFF
R282 100k 1 % 0402 NO STUFF
50OHM_NETCLASS1
R595 10k 5 % 0402 COMMON
R276 0ohm 0.05 ohm 0402 COMMON
Y1
S3M27.0000F18S1Y-NS1
SMD_32X25
27MHZ
COMMON
XTALIN
XTALOUT_RS
XTALOUT
R264 0ohm 0402 0.05 ohm COMMON
C236 22pF 50V 5% NPO 0402 COMMON
C230 22pF 50V 5% NPO 0402 COMMON
GND

XTALOUTBUFF

1.8V	0.9V	0V
66% PWM	33% PWM	DISABLED (100%)

ASSEMBLY <ASSEMBLY_DESCRIPTION>
PAGE DETAIL MISC1: ROM, XTAL,STRAPS

ALL NVIDIA DESIGN SPECIFICATIONS, REFERENCE SPECIFICATIONS, REFERENCE BOARDS, FILES, DRAWINGS, DIAGNOSTICS, LISTS AND OTHER DOCUMENTS OR INFORMATION (TOGETHER AND SEPARATELY, 'MATERIALS') ARE BEING PROVIDED 'AS IS'. THE MATERIALS MAY CONTAIN KNOWN AND UNKNOWN VIOLATIONS OR DEVIATIONS OF INDUSTRY STANDARDS AND SPECIFICATIONS. NVIDIA MAKES NO WARRANTIES, EXPRESSED, IMPLIED, STATUTORY OR OTHERWISE WITH RESPECT TO THE MATERIALS OR OTHERWISE, AND EXPRESSLY DISCLAIMS ALL IMPLIED WARRANTIES INCLUDING, WITHOUT LIMITATION, THE WARRANTIES OF DESIGN, OF NONINFRINGEMENT, MERCHANTABILITY OR FITNESS FOR A PARTICULAR PURPOSE, OR ARISING FROM A COURSE OF DEALING, TRADE USAGE, TRADE PRACTICE, OR INDUSTRY STANDARDS.

RD Center
Colorful Co.,Ltd
深圳市七彩虹科技发展有限公司

Size	Document Number	Rev
Custom	GA104H8-E10	A

Date: Tuesday, July 14, 2020 Sheet 26 of 57

Page27: MISC1: JTAG, GPIO, ADC, I2C, OVERT

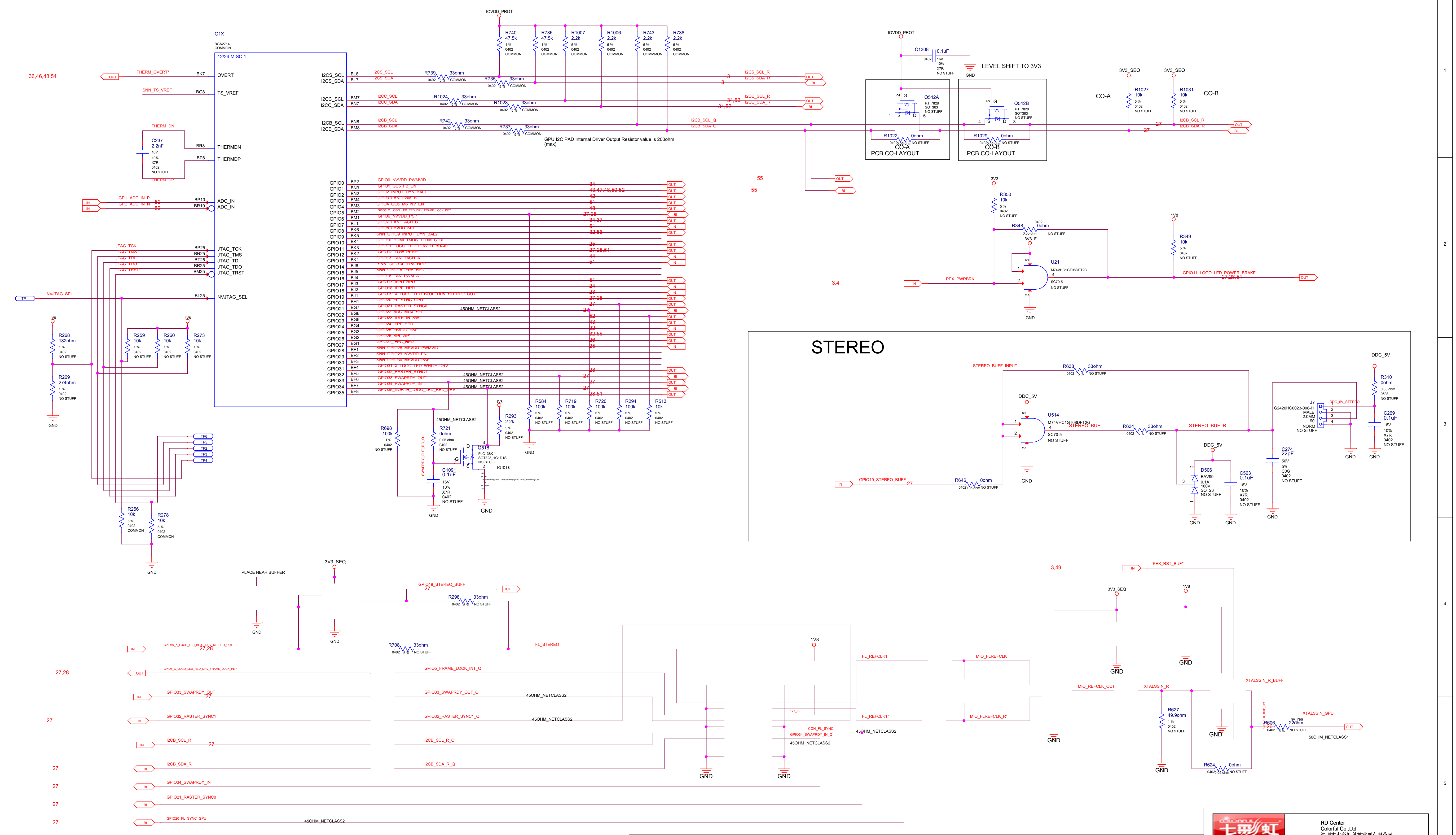
G1X
BGA2714
COMMON
12/24 MISC 1
OVERT
TS_VREF
THERMDN
THERMDP
ADC_IN
JTAG_TCK
JTAG_TMS
JTAG_TDI
JTAG_TDO
JTAG_TRST
NVJTAG_SEL
I2CS_SCL
I2CS_SDA
I2CC_SCL
I2CC_SDA
I2CB_SCL
I2CB_SDA
GPIO0
GPIO1
GPIO2
GPIO3
GPIO4
GPIO5
GPIO6
GPIO7
GPIO8
GPIO9
GPIO10
GPIO11
GPIO12
GPIO13
GPIO14
GPIO15
GPIO16
GPIO17
GPIO18
GPIO19
GPIO20
GPIO21
GPIO22
GPIO23
GPIO24
GPIO25
GPIO26
GPIO27
GPIO28
GPIO29
GPIO30
GPIO31
GPIO32
GPIO33
GPIO34
GPIO35
THERM_OVERT*
SNN_TS_VREF
THERM_DN
THERM_DP
GPU_ADC_IN_P
GPU_ADC_IN_N
NVJTAG_SEL
TP1
IOVDD_PROT
R740 47.5k
R736 47.5k
R1007 2.2k
R1006 2.2k
R743 2.2k
R738 2.2k
R739 33ohm
R735 33ohm
R1024 33ohm
R1023 33ohm
R742 33ohm
R737 33ohm
GPU I2C PAD Internal Driver Output Resistor value is 200ohm (max).
LEVEL SHIFT TO 3V3
C1308 0.1uF
Q542A PJT7828
Q542B PJT7828
R1022 0ohm
R1029 0ohm
CO-A
CO-B
PCB CO-LAYOUT
3V3_SEQ
R1027 10k
R1031 10k
I2CB_SCL_R
I2CB_SDA_R
R350 10k
R348 0ohm
R349 10k
U21 M74VHC1GT08DF1G
PEX_PWRBRK
GPIO11_LOGO_LED_POWER_BRAKE
R268 182ohm
R269 274ohm
R259 10k
R260 10k
R273 10k
R256 10k
R278 10k
R698 100k
R721 0ohm
C1091 0.1uF
R293 2.2k
Q518 PJC138K
R584 100k
R719 100k
R720 100k
R294 100k
R513 10k
45OHM_NETCLASS2
STEREO
STEREO_BUFF_INPUT
R638 33ohm
DDC_5V
R310 0ohm
J7 G2420HC0023-008-H
U514 M74VHC1GT08DF1G
STEREO_BUF
R634 33ohm
STEREO_BUF_R
C269 0.1uF
C274 22pF
D506 BAV99
C563 0.1uF
GPIO19_STEREO_BUFF
R646 0ohm
PEX_RST_BUF*
3V3_SEQ
PLACE NEAR BUFFER
R298 33ohm
R708 33ohm
FL_STEREO
GPIO5_FRAME_LOCK_INT_Q
GPIO33_SWAPRDY_OUT_Q
GPIO32_RASTER_SYNC1_Q
I2CB_SCL_R_Q
I2CB_SDA_R_Q
GPIO34_SWAPRDY_IN
GPIO21_RASTER_SYNC0
GPIO20_FL_SYNC_GPU
FL_REFCLK1
MIO_FLREFCLK
MIO_REFCLK_OUT
XTALSSIN_R
XTALSSIN_R_BUFF
R627 49.9ohm
XTALSSIN_GPU
R606 22ohm
R624 0ohm
50OHM_NETCLASS1
GND

ASSEMBLY	<ASSEMBLY_DESCRIPTION>
PAGE DETAIL	MISC2: JTAG,GPIO,ADC,I2C,FL,STEERO

ALL NVIDIA DESIGN SPECIFICATIONS, REFERENCE SPECIFICATIONS, REFERENCE BOARDS, FILES, DRAWINGS, DIAGNOSTICS, LISTS AND OTHER DOCUMENTS OR INFORMATION (TOGETHER AND SEPARATELY, 'MATERIALS') ARE BEING PROVIDED 'AS IS'. THE MATERIALS MAY CONTAIN KNOWN AND UNKNOWN VIOLATIONS OR DEVIATIONS OF INDUSTRY STANDARDS AND SPECIFICATIONS. NVIDIA MAKES NO WARRANTIES, EXPRESSED, IMPLIED, STATUTORY OR OTHERWISE WITH RESPECT TO THE MATERIALS OR OTHERWISE, AND EXPRESSLY DISCLAIMS ALL IMPLIED WARRANTIES INCLUDING, WITHOUT LIMITATION, THE WARRANTIES OF DESIGN, OF NONINFRINGEMENT, MERCHANTABILITY OR FITNESS FOR A PARTICULAR PURPOSE, OR ARISING FROM A COURSE OF DEALING, TRADE USAGE, TRADE PRACTICE, OR INDUSTRY STANDARDS.

RD Center
Colorful Co.,Ltd
深圳市七彩虹科技发展有限公司

Size	Document Number	Rev
Custom	GA104H8-E10	A

Date: Monday, July 13, 2020 Sheet 27 of 57

Page28: RGB

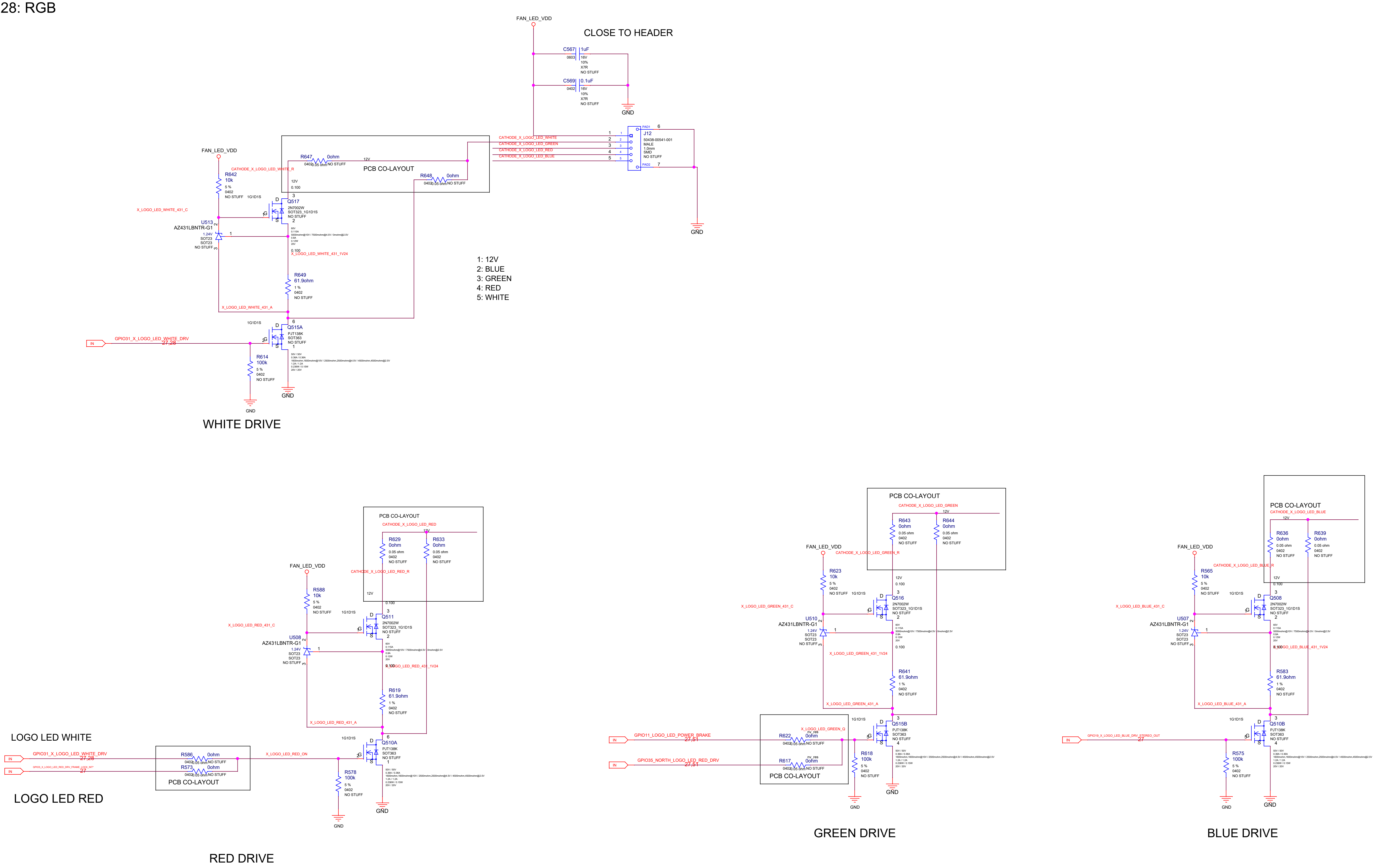
FAN_LED_VDD
CLOSE TO HEADER
C567 1uF 0603 16V 10% X7R NO STUFF
C569 0.1uF 0402 16V 10% X7R NO STUFF
GND
J12 50438-00541-001 MALE 1.0mm SMD NO STUFF
PAD1 6
PAD2 7
CATHODE_X_LOGO_LED_WHITE
CATHODE_X_LOGO_LED_GREEN
CATHODE_X_LOGO_LED_RED
CATHODE_X_LOGO_LED_BLUE
1: 12V
2: BLUE
3: GREEN
4: RED
5: WHITE
PCB CO-LAYOUT
R647 0ohm 0402 0.05 ohm NO STUFF
12V
R648 0ohm 0402 0.05 ohm NO STUFF
CATHODE_X_LOGO_LED_WHITE_R
R642 10k 5 % 0402 NO STUFF
1G1D1S
X_LOGO_LED_WHITE_431_C
U513 AZ431LBNTR-G1 1.24V SOT23 SOT23 NO STUFF
Q517 2N7002W SOT323_1G1D1S NO STUFF
12V 0.100
60V 0.115A 5000mohm@10V / 7500mohm@4.5V / 0mohm@2.5V 0.8A 0.12W 20V
0.100
X_LOGO_LED_WHITE_431_1V24
R649 61.9ohm 1 % 0402 NO STUFF
X_LOGO_LED_WHITE_431_A
Q515A PJT138K SOT363 NO STUFF
50V / 50V 0.36A / 0.36A 1600mohm,1600mohm@10V / 2500mohm,2500mohm@4.5V / 4500mohm,4500mohm@2.5V 1.2A / 1.2A 0.236W / 0.15W 20V / 20V
IN
GPIO31_X_LOGO_LED_WHITE_DRV 27,28
R614 100k 5 % 0402 NO STUFF
WHITE DRIVE
PCB CO-LAYOUT
CATHODE_X_LOGO_LED_RED
R629 0ohm 0.05 ohm 0402 NO STUFF
R633 0ohm 0.05 ohm 0402 NO STUFF
CATHODE_X_LOGO_LED_RED_R
R588 10k 5 % 0402 NO STUFF
X_LOGO_LED_RED_431_C
U508 AZ431LBNTR-G1 1.24V SOT23 SOT23 NO STUFF
Q511 2N7002W SOT323_1G1D1S NO STUFF
X_LOGO_LED_RED_431_1V24
R619 61.9ohm 1 % 0402 NO STUFF
X_LOGO_LED_RED_431_A
Q510A PJT138K SOT363 NO STUFF
LOGO LED WHITE
GPIO31_X_LOGO_LED_WHITE_DRV 27,28
GPIO5_X_LOGO_LED_RED_DRV_FRAME_LOCK_INT* 27
R586 0ohm 0402 0.05 ohm NO STUFF
R573 0ohm 0402 0.05 ohm NO STUFF
X_LOGO_LED_RED_ON
R578 100k 5 % 0402 NO STUFF
LOGO LED RED
RED DRIVE
CATHODE_X_LOGO_LED_GREEN
R643 0ohm 0.05 ohm 0402 NO STUFF
R644 0ohm 0.05 ohm 0402 NO STUFF
CATHODE_X_LOGO_LED_GREEN_R
R623 10k 5 % 0402 NO STUFF
X_LOGO_LED_GREEN_431_C
U510 AZ431LBNTR-G1 1.24V SOT23 SOT23 NO STUFF
Q516 2N7002W SOT323_1G1D1S NO STUFF
X_LOGO_LED_GREEN_431_1V24
R641 61.9ohm 1 % 0402 NO STUFF
X_LOGO_LED_GREEN_431_A
Q515B PJT138K SOT363 NO STUFF
GPIO11_LOGO_LED_POWER_BRAKE 27,51
GPIO35_NORTH_LOGO_LED_RED_DRV 27,51
X_LOGO_LED_GREEN_Q
R622 nv_res 0ohm 0402 0.05 ohm NO STUFF
R617 nv_res 0ohm 0402 0.05 ohm NO STUFF
R618 100k 5 % 0402 NO STUFF
GREEN DRIVE
CATHODE_X_LOGO_LED_BLUE
R636 0ohm 0.05 ohm 0402 NO STUFF
R639 0ohm 0.05 ohm 0402 NO STUFF
CATHODE_X_LOGO_LED_BLUE_R
R565 10k 5 % 0402 NO STUFF
X_LOGO_LED_BLUE_431_C
U507 AZ431LBNTR-G1 1.24V SOT23 SOT23 NO STUFF
Q508 2N7002W SOT323_1G1D1S NO STUFF
X_LOGO_LED_BLUE_431_1V24
R583 61.9ohm 1 % 0402 NO STUFF
X_LOGO_LED_BLUE_431_A
Q510B PJT138K SOT363 NO STUFF
GPIO19_X_LOGO_LED_BLUE_DRV_STEREO_OUT 27
R575 100k 5 % 0402 NO STUFF
BLUE DRIVE

ASSEMBLY <ASSEMBLY_DESCRIPTION>
PAGE DETAIL MISC3: RGB

ALL NVIDIA DESIGN SPECIFICATIONS, REFERENCE SPECIFICATIONS, REFERENCE BOARDS, FILES, DRAWINGS, DIAGNOSTICS, LISTS AND OTHER DOCUMENTS OR INFORMATION (TOGETHER AND SEPARATELY, 'MATERIALS') ARE BEING PROVIDED 'AS IS'. THE MATERIALS MAY CONTAIN KNOWN AND UNKNOWN VIOLATIONS OR DEVIATIONS OF INDUSTRY STANDARDS AND SPECIFICATIONS. NVIDIA MAKES NO WARRANTIES, EXPRESSED, IMPLIED, STATUTORY OR OTHERWISE WITH RESPECT TO THE MATERIALS OR OTHERWISE, AND EXPRESSLY DISCLAIMS ALL IMPLIED WARRANTIES INCLUDING, WITHOUT LIMITATION, THE WARRANTIES OF DESIGN, OF NONINFRINGEMENT, MERCHANTABILITY OR FITNESS FOR A PARTICULAR PURPOSE, OR ARISING FROM A COURSE OF DEALING, TRADE USAGE, TRADE PRACTICE, OR INDUSTRY STANDARDS.

RD Center
Colorful Co.,Ltd
深圳市七彩虹科技发展有限公司

Size Custom
Document Number GA104H8-E10
Rev A
Date: Monday, July 13, 2020
Sheet 28 of 57

Page29: PS: 1V8

1v8 Switcher

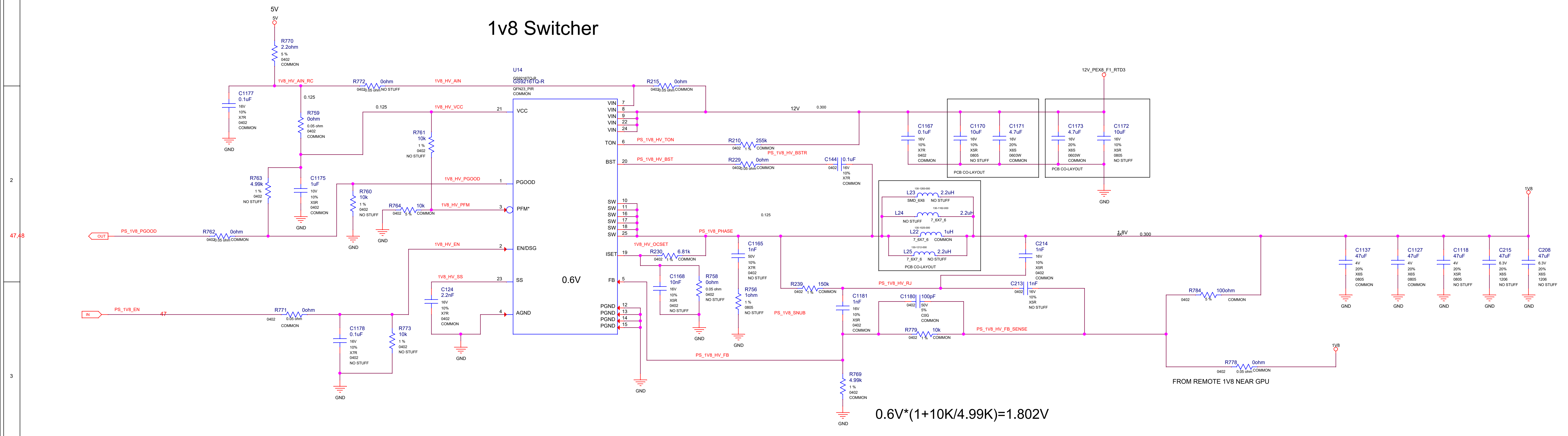
5V
5V
R770
2.2ohm
5 %
0402
COMMON
1V8_HV_AIN_RC
C1177
0.1uF
16V
10%
X7R
0402
COMMON
GND
R772
0ohm
0402
0.05 ohm
NO STUFF
1V8_HV_AIN
0.125
R759
0ohm
0.05 ohm
0402
COMMON
0.125
1V8_HV_VCC
R761
10k
1 %
0402
NO STUFF
R763
4.99k
1 %
0402
NO STUFF
C1175
1uF
10V
10%
X5R
0402
COMMON
GND
1V8_HV_PGOOD
R760
10k
1 %
0402
NO STUFF
GND
R764
10k
0402
5 %
COMMON
GND
1V8_HV_PFM
47,48
OUT
PS_1V8_PGOOD
R762
0ohm
0402
0.05 ohm
COMMON
1V8_HV_EN
IN
PS_1V8_EN
47
R771
0ohm
0402
0.05 ohm
COMMON
C1178
0.1uF
16V
10%
X7R
0402
NO STUFF
R773
10k
1 %
0402
NO STUFF
GND
1V8_HV_SS
C124
2.2nF
16V
10%
X7R
0402
COMMON
GND
U14
GS9216TQ-R
GS9216TQ-R
QFN23_PIR
COMMON
21 VCC
1 PGOOD
3 PFM*
2 EN/DSG
23 SS
4 AGND
0.6V
VIN 7
VIN 8
VIN 9
VIN 22
VIN 24
TON 6
BST 20
SW 10
SW 11
SW 16
SW 17
SW 18
SW 25
ISET 19
FB 5
PGND 12
PGND 13
PGND 14
PGND 15
GND
R215
0ohm
0402
0.05 ohm
COMMON
12V
0.300
PS_1V8_HV_TON
R210
255k
0402
1 %
COMMON
PS_1V8_HV_BSTR
PS_1V8_HV_BST
R229
0ohm
0402
0.05 ohm
COMMON
C144
0.1uF
0402
16V
10%
X7R
COMMON
0.125
PS_1V8_PHASE
1V8_HV_OCSET
R230
6.81k
0402
1 %
COMMON
C1168
10nF
16V
10%
X5R
0402
NO STUFF
R758
0ohm
0.05 ohm
0402
NO STUFF
GND
C1165
1nF
50V
10%
X7R
0402
NO STUFF
R756
1ohm
1 %
0805
NO STUFF
GND
PS_1V8_SNUB
PS_1V8_HV_FB
R239
150k
0402
1 %
COMMON
PS_1V8_HV_RJ
C1181
1nF
16V
10%
X5R
0402
COMMON
C1180
100pF
0402
50V
5%
C0G
COMMON
R779
10k
0402
1 %
COMMON
PS_1V8_HV_FB_SENSE
R769
4.99k
1 %
0402
COMMON
GND
12V_PEX8_F1_RTD3
C1167
0.1uF
16V
10%
X7R
0402
COMMON
C1170
10uF
16V
10%
X5R
0805
NO STUFF
C1171
4.7uF
16V
20%
X6S
0603W
COMMON
PCB CO-LAYOUT
C1173
4.7uF
16V
20%
X6S
0603W
COMMON
C1172
10uF
16V
10%
X5R
0805
NO STUFF
PCB CO-LAYOUT
GND
130-1283-000
L23
2.2uH
SMD_6X6
NO STUFF
130-1162-000
L24
2.2uH
NO STUFF
7_6X7_6
130-1025-000
L22
1uH
7_6X7_6
COMMON
130-1212-000
L25
2.2uH
7_6X7_6
NO STUFF
PCB CO-LAYOUT
C214
1nF
16V
10%
X5R
0402
COMMON
C213
1nF
0402
16V
10%
X5R
NO STUFF
1.8V
8A
0.300
R784
100ohm
0402
5 %
COMMON
R778
0ohm
0402
0.05 ohm
COMMON
1V8
FROM REMOTE 1V8 NEAR GPU
1V8
C1137
47uF
4V
20%
X6S
0805
COMMON
C1127
47uF
4V
20%
X6S
0805
COMMON
C1118
47uF
4V
20%
X5R
0805
NO STUFF
C215
47uF
6.3V
20%
X6S
1206
NO STUFF
C208
47uF
6.3V
20%
X6S
1206
NO STUFF
GND
GND
GND
GND
GND
1
2
3
4
5

0.6V*(1+10K/4.99K)=1.802V

ASSEMBLY	<ASSEMBLY_DESCRIPTION>
PAGE DETAIL	PS: 1V8

ALL NVIDIA DESIGN SPECIFICATIONS, REFERENCE SPECIFICATIONS, REFERENCE BOARDS, FILES, DRAWINGS, DIAGNOSTICS, LISTS AND OTHER DOCUMENTS OR INFORMATION (TOGETHER AND SEPARATELY, 'MATERIALS') ARE BEING PROVIDED 'AS IS'. THE MATERIALS MAY CONTAIN KNOWN AND UNKNOWN VIOLATIONS OR DEVIATIONS OF INDUSTRY STANDARDS AND SPECIFICATIONS. NVIDIA MAKES NO WARRANTIES, EXPRESSED, IMPLIED, STATUTORY OR OTHERWISE WITH RESPECT TO THE MATERIALS OR OTHERWISE, AND EXPRESSLY DISCLAIMS ALL IMPLIED WARRANTIES INCLUDING, WITHOUT LIMITATION, THE WARRANTIES OF DESIGN, OF NONINFRINGEMENT, MERCHANTABILITY OR FITNESS FOR A PARTICULAR PURPOSE, OR ARISING FROM A COURSE OF DEALING, TRADE USAGE, TRADE PRACTICE, OR INDUSTRY STANDARDS.

RD Center
Colorful Co.,Ltd
深圳市七彩虹科技发展有限公司

Size Custom
Document Number GA104H8-E10
Rev A
Date: Tuesday, July 14, 2020

Page30: PS: 5V

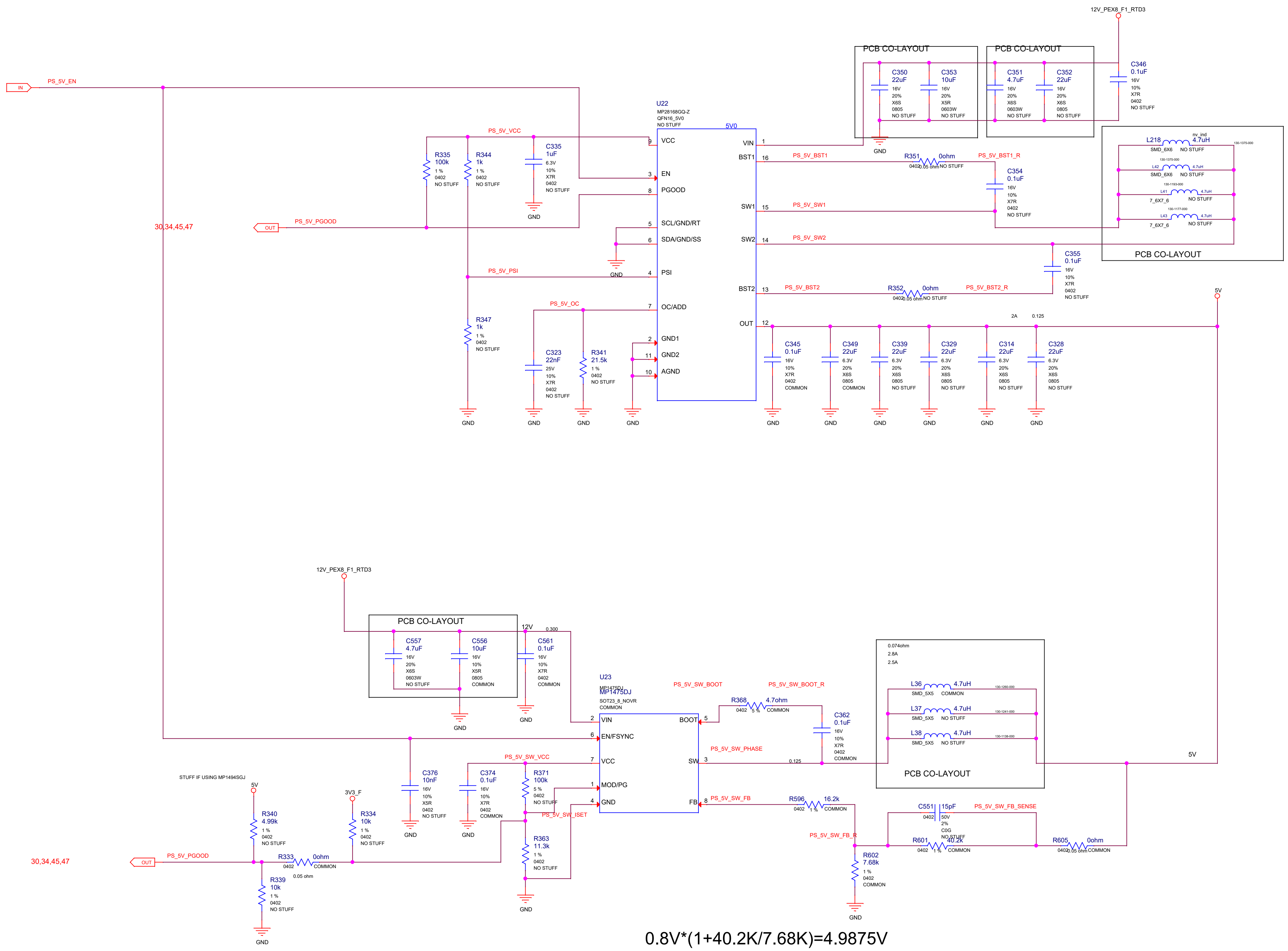
12V_PEX8_F1_RTD3
47
IN
PS_5V_EN
U22
MP28168GQ-Z
QFN16_5V0
NO STUFF
5V0
VCC
EN
PGOOD
SCL/GND/RT
SDA/GND/SS
PSI
OC/ADD
GND1
GND2
AGND
VIN
BST1
SW1
SW2
BST2
OUT
PS_5V_VCC
R335 100k 1 % 0402 NO STUFF
R344 1k 1 % 0402 NO STUFF
C335 1uF 6.3V 10% X7R 0402 NO STUFF
30,34,45,47
OUT
PS_5V_PGOOD
PS_5V_PSI
PS_5V_OC
R347 1k 1 % 0402 NO STUFF
C323 22nF 25V 10% X7R 0402 NO STUFF
R341 21.5k 1 % 0402 NO STUFF
GND
PCB CO-LAYOUT
C350 22uF 16V 20% X6S 0805 NO STUFF
C353 10uF 16V 20% X5R 0603W NO STUFF
C351 4.7uF 16V 20% X6S 0603W NO STUFF
C352 22uF 16V 20% X6S 0805 NO STUFF
C346 0.1uF 16V 10% X7R 0402 NO STUFF
PS_5V_BST1
R351 0ohm 0402 0.05 ohm NO STUFF
PS_5V_BST1_R
C354 0.1uF 16V 10% X7R 0402 NO STUFF
PS_5V_SW1
PS_5V_SW2
L218 4.7uH SMD_6X6 NO STUFF
L42 4.7uH SMD_6X6 NO STUFF
L41 4.7uH 7_6X7_6 NO STUFF
L43 4.7uH 7_6X7_6 NO STUFF
C355 0.1uF 16V 10% X7R 0402 NO STUFF
PS_5V_BST2
R352 0ohm 0402 0.05 ohm NO STUFF
PS_5V_BST2_R
5V
2A
0.125
C345 0.1uF 16V 10% X7R 0402 COMMON
C349 22uF 6.3V 20% X6S 0805 COMMON
C339 22uF 6.3V 20% X6S 0805 NO STUFF
C329 22uF 6.3V 20% X6S 0805 NO STUFF
C314 22uF 6.3V 20% X6S 0805 NO STUFF
C328 22uF 6.3V 20% X6S 0805 NO STUFF
12V_PEX8_F1_RTD3
PCB CO-LAYOUT
C557 4.7uF 16V 20% X6S 0603W NO STUFF
C556 10uF 16V 10% X5R 0805 COMMON
12V
0.300
C561 0.1uF 16V 10% X7R 0402 COMMON
U23
MP1475DJ
SOT23_8_NOVR
COMMON
VIN
EN/FSYNC
VCC
MOD/PG
GND
BOOT
SW
FB
PS_5V_SW_BOOT
PS_5V_SW_BOOT_R
R368 4.7ohm 0402 5 % COMMON
C362 0.1uF 16V 10% X7R 0402 COMMON
PS_5V_SW_PHASE
0.125
0.074ohm
2.8A
2.5A
L36 4.7uH SMD_5X5 COMMON
L37 4.7uH SMD_5X5 NO STUFF
L38 4.7uH SMD_5X5 NO STUFF
PCB CO-LAYOUT
5V
PS_5V_SW_VCC
C376 10nF 16V 10% X5R 0402 NO STUFF
C374 0.1uF 16V 10% X7R 0402 COMMON
R371 100k 5 % 0402 NO STUFF
PS_5V_SW_ISET
R363 11.3k 1 % 0402 NO STUFF
PS_5V_SW_FB
R596 16.2k 0402 1 % COMMON
C551 15pF 0402 50V 2% C0G NO STUFF
PS_5V_SW_FB_SENSE
PS_5V_SW_FB_R
R601 40.2K 0402 1 % COMMON
R605 0ohm 0402 0.05 ohm COMMON
R602 7.68k 1 % 0402 COMMON
STUFF IF USING MP1494SGJ
5V
3V3_F
R340 4.99k 1 % 0402 NO STUFF
R334 10k 1 % 0402 NO STUFF
30,34,45,47
OUT
PS_5V_PGOOD
R333 0ohm 0402 COMMON
0.05 ohm
R339 10k 1 % 0402 NO STUFF

0.8V*(1+40.2K/7.68K)=4.9875V

ASSEMBLY	<ASSEMBLY_DESCRIPTION>
PAGE DETAIL	PS: 5V

ALL NVIDIA DESIGN SPECIFICATIONS, REFERENCE SPECIFICATIONS, REFERENCE BOARDS, FILES, DRAWINGS, DIAGNOSTICS, LISTS AND OTHER DOCUMENTS OR INFORMATION (TOGETHER AND SEPARATELY, 'MATERIALS') ARE BEING PROVIDED 'AS IS'. THE MATERIALS MAY CONTAIN KNOWN AND UNKNOWN VIOLATIONS OR DEVIATIONS OF INDUSTRY STANDARDS AND SPECIFICATIONS. NVIDIA MAKES NO WARRANTIES, EXPRESSED, IMPLIED, STATUTORY OR OTHERWISE WITH RESPECT TO THE MATERIALS OR OTHERWISE, AND EXPRESSLY DISCLAIMS ALL IMPLIED WARRANTIES INCLUDING, WITHOUT LIMITATION, THE WARRANTIES OF DESIGN, OF NONINFRINGEMENT, MERCHANTABILITY OR FITNESS FOR A PARTICULAR PURPOSE, OR ARISING FROM A COURSE OF DEALING, TRADE USAGE, TRADE PRACTICE, OR INDUSTRY STANDARDS.

RD Center
Colorful Co.,Ltd
深圳市七彩虹科技发展有限公司

Size	Document Number	Rev
Custom	GA104H8-E10	A
Date: Tuesday, July 14, 2020	Sheet 30 of 57	

Page31: PS: PEXVDD

PEX Switcher

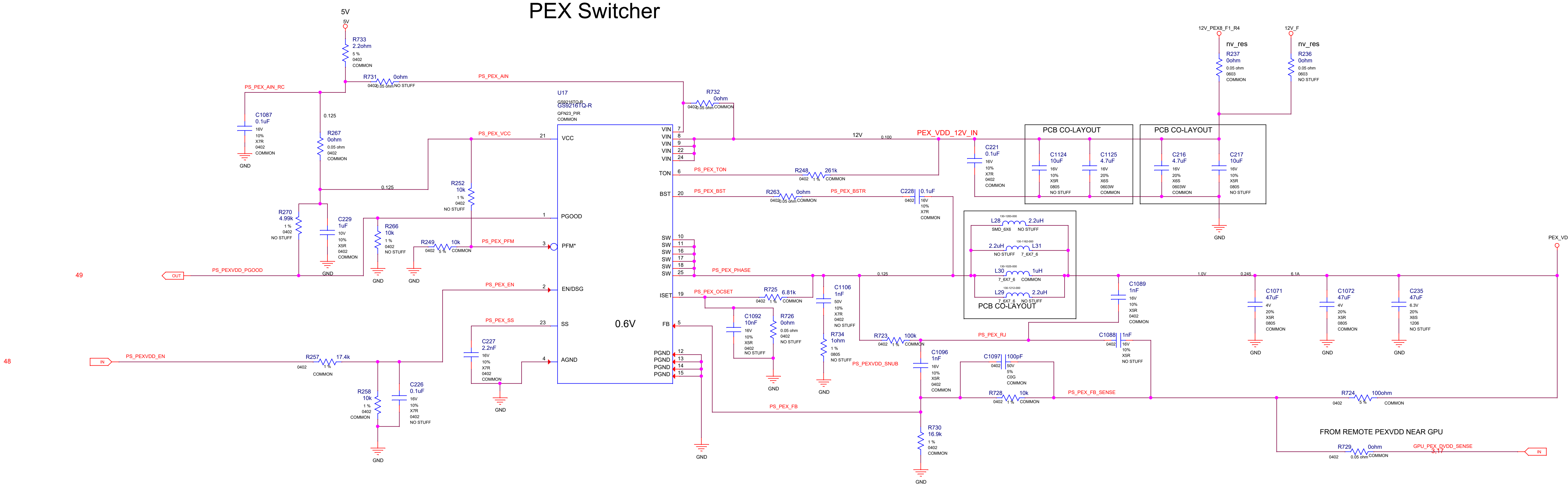
5V
R733
2.2ohm
5 %
0402
COMMON
R731 0ohm
0402 0.05 ohm NO STUFF
PS_PEX_AIN
PS_PEX_AIN_RC
C1087
0.1uF
16V
10%
X7R
0402
COMMON
GND
0.125
R267
0ohm
0.05 ohm
0402
COMMON
R732 0ohm
0402 0.05 ohm COMMON
U17
GS9216TQ-R
QFN23_PIR
COMMON
VCC
VIN
TON
BST
PGOOD
PFM*
SW
ISET
EN/DSG
SS
AGND
FB
PGND
0.6V
PS_PEX_VCC
R252
10k
1 %
0402
NO STUFF
R270
4.99k
1 %
0402
NO STUFF
C229
1uF
10V
10%
X5R
0402
COMMON
R266
10k
1 %
0402
NO STUFF
R249 10k
0402 5 % COMMON
PS_PEX_PFM
49
OUT
PS_PEXVDD_PGOOD
PS_PEX_EN
PS_PEX_SS
C227
2.2nF
16V
10%
X7R
0402
COMMON
48
IN
PS_PEXVDD_EN
R257 17.4k
0402 1 % COMMON
R258
10k
1 %
0402
COMMON
C226
0.1uF
16V
10%
X7R
0402
NO STUFF
12V
0.100
PEX_VDD_12V_IN
PS_PEX_TON
R248 261k
0402 1 % COMMON
PS_PEX_BST
R263 0ohm
0402 0.05 ohm COMMON
PS_PEX_BSTR
C228 0.1uF
0402
16V
10%
X7R
COMMON
C221
0.1uF
16V
10%
X7R
0402
COMMON
PCB CO-LAYOUT
C1124
10uF
16V
10%
X5R
0805
NO STUFF
C1125
4.7uF
16V
20%
X6S
0603W
COMMON
C216
4.7uF
16V
20%
X6S
0603W
COMMON
C217
10uF
16V
10%
X5R
0805
NO STUFF
12V_PEX8_F1_R4
12V_F
nv_res
R237
0ohm
0.05 ohm
0603
COMMON
R236
0ohm
0.05 ohm
0603
NO STUFF
PS_PEX_PHASE
0.125
L28 2.2uH
SMD_6X6 NO STUFF
2.2uH L31
NO STUFF 7_6X7_6
L30 1uH
7_6X7_6 COMMON
L29 2.2uH
7_6X7_6 NO STUFF
PCB CO-LAYOUT
PS_PEX_OCSET
R725 6.81k
0402 1 % COMMON
C1092
10nF
16V
10%
X5R
0402
NO STUFF
R726
0ohm
0.05 ohm
0402
NO STUFF
C1106
1nF
50V
10%
X7R
0402
NO STUFF
R734
1ohm
1 %
0805
NO STUFF
PS_PEXVDD_SNUB
R723 100k
0402 1 % COMMON
PS_PEX_RJ
C1096
1nF
16V
10%
X5R
0402
COMMON
C1097 100pF
0402 50V 5% C0G COMMON
R728 10k
0402 1 % COMMON
PS_PEX_FB_SENSE
PS_PEX_FB
R730
16.9k
1 %
0402
COMMON
C1089
1nF
16V
10%
X5R
0402
COMMON
C1088 1nF
0402 16V 10% X5R NO STUFF
1.0V
0.245
6.1A
C1071
47uF
4V
20%
X5R
0805
COMMON
C1072
47uF
4V
20%
X5R
0805
COMMON
C235
47uF
6.3V
20%
X6S
1206
NO STUFF
PEX_VDD
R724 100ohm
0402 5 % COMMON
FROM REMOTE PEXVDD NEAR GPU
R729 0ohm
0402 0.05 ohm COMMON
GPU_PEX_DVDD_SENSE
IN
GND

0.6V*(1+10K/16.9K)=0.955V

ASSEMBLY	<ASSEMBLY_DESCRIPTION>
PAGE DETAIL	PS: PEXVDD

ALL NVIDIA DESIGN SPECIFICATIONS, REFERENCE SPECIFICATIONS, REFERENCE BOARDS, FILES, DRAWINGS, DIAGNOSTICS, LIST AND OTHER DOCUMENTS OR INFORMATION (TOGETHER AND SEPARATELY, 'MATERIALS') ARE BEING PROVIDED 'AS IS'. THE MATERIALS MAY CONTAIN KNOWN AND UNKNOWN VIOLATIONS OR DEVIATIONS OF INDUSTRY STANDARDS AND SPECIFICATIONS. NVIDIA MAKES NO WARRANTIES, EXPRESSED, IMPLIED, STATUTORY OR OTHERWISE WITH RESPECT TO THE MATERIALS AND EXPRESSLY DISCLAIMS ALL IMPLIED WARRANTIES INCLUDING, WITHOUT LIMITATION, THE WARRANTIES OF DESIGN, OF NONINFRINGEMENT, MERCHANTABILITY OR FITNESS FOR A PARTICULAR PURPOSE, OR ARISING FROM A COURSE OF DEALING, TRADE USAGE, TRADE PRACTICE, OR INDUSTRY STANDARDS.

RD Center
Colorful Co.,Ltd
深圳市七彩虹科技发展有限公司

Size	Document Number	Rev
Custom	GA104H8-E10	A

Date: Tuesday, July 14, 2020 Sheet 31 of 57

Page32: PS: FBVDDQ

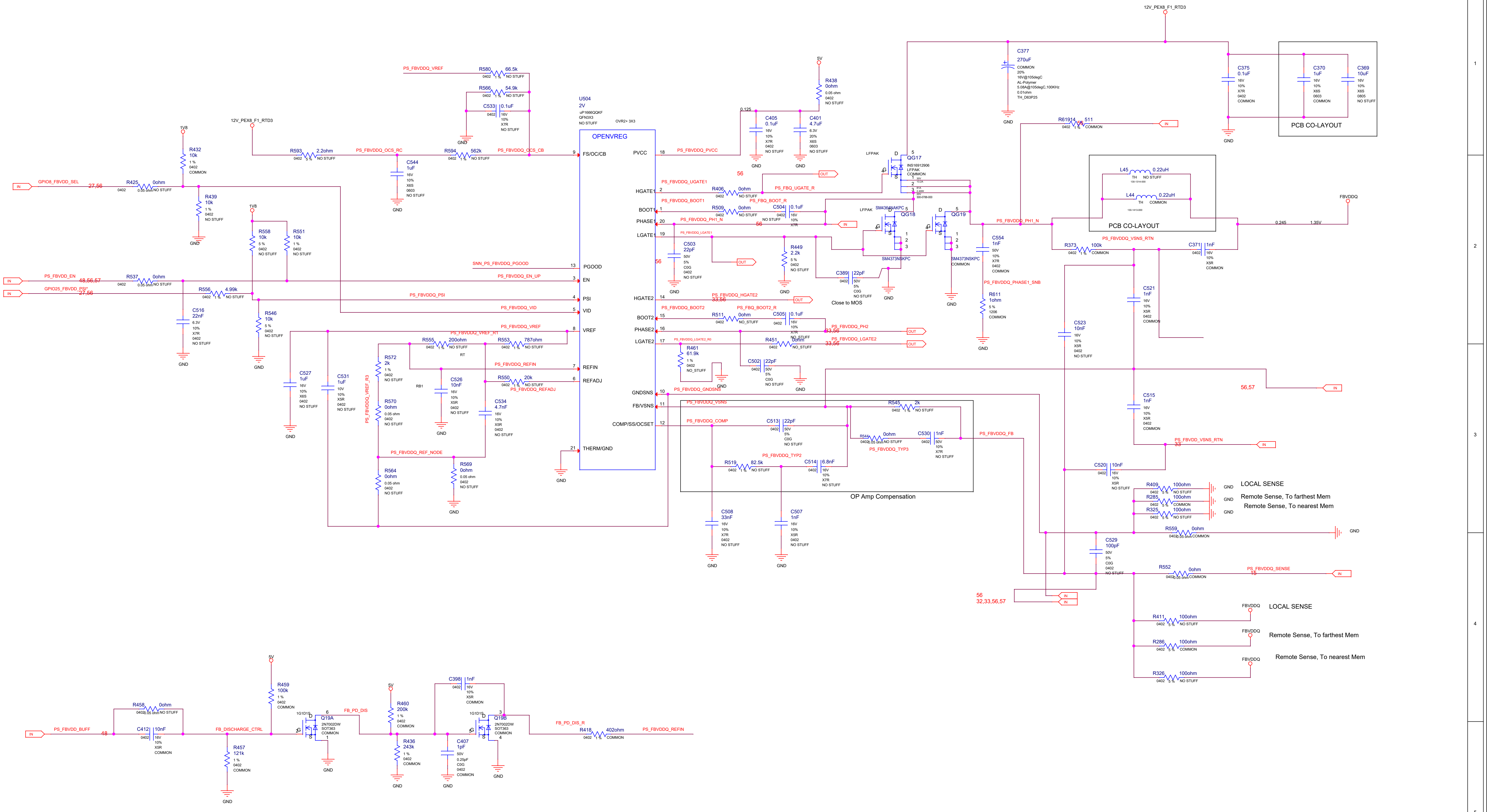
12V_PEX8_F1_RTD3
5V
1V8
U504
2V
uP1666QQKF
QFN3X3
NO STUFF
OVR2+ 3X3
OPENVREG
FS/OC/CB
PVCC
HGATE1
BOOT1
PHASE1
LGATE1
PGOOD
EN
PSI
VID
VREF
REFIN
REFADJ
HGATE2
BOOT2
PHASE2
LGATE2
GNDSNS
FB/VSNS
COMP/SS/OCSET
THERM/GND
PS_FBVDDQ_VREF
PS_FBVDDQ_OCS_RC
PS_FBVDDQ_OCS_CB
PS_FBVDDQ_PVCC
PS_FBVDDQ_UGATE1
PS_FBVDDQ_BOOT1
PS_FBVDDQ_PH1_N
PS_FBVDDQ_LGATE1
SNN_PS_FBVDDQ_PGOOD
PS_FBVDDQ_EN_UP
PS_FBVDDQ_PSI
PS_FBVDDQ_VID
PS_FBVDDQ_REFIN
PS_FBVDDQ_REFADJ
PS_FBVDDQ_REF_NODE
PS_FBVDDQ_VREF_R3
PS_FBVDDQ_HGATE2
PS_FBVDDQ_BOOT2
PS_FBQ_BOOT2_R
PS_FBVDDQ_PH2
PS_FBVDDQ_LGATE2
PS_FBVDDQ_GNDSNS
PS_FBVDDQ_VSNS
PS_FBVDDQ_COMP
PS_FBVDDQ_TYP2
PS_FBVDDQ_TYP3
PS_FBVDDQ_FB
PS_FBVDDQ_PHASE1_SNB
PS_FBVDDQ_VSNS_RTN
PS_FBVDDQ_SENSE
PS_FBVDDQ_BUFF
PS_FBVDDQ_REFIN
FB_DISCHARGE_CTRL
FB_PD_DIS
FB_PD_DIS_R
GPIO8_FBVDD_SEL
PS_FBVDD_EN
GPIO25_FBVDD_PSI
IN
OUT
QG17
QG18
QG19
SM4373NSKPC
Q19A
Q19B
2N7002DW
SOT363
L45 0.22uH
L44 0.22uH
C377 270uF
C375 0.1uF
C370 1uF
C369 10uF
PCB CO-LAYOUT
FBVDDQ
0.245
1.35V
Close to MOS
OP Amp Compensation
LOCAL SENSE
Remote Sense, To farthest Mem
Remote Sense, To nearest Mem
GND
NO STUFF
COMMON

ASSEMBLY	<ASSEMBLY_DESCRIPTION>
PAGE DETAIL	PS: FBVDDQ

ALL NVIDIA DESIGN SPECIFICATIONS, REFERENCE SPECIFICATIONS, REFERENCE BOARDS, FILES, DRAWINGS, DIAGNOSTICS, LISTS AND OTHER DOCUMENTS OR INFORMATION (TOGETHER AND SEPARATELY, 'MATERIALS') ARE BEING PROVIDED 'AS IS'. THE MATERIALS MAY CONTAIN KNOWN AND UNKNOWN VIOLATIONS OR DEVIATIONS OF INDUSTRY STANDARDS AND SPECIFICATIONS. NVIDIA MAKES NO WARRANTIES, EXPRESSED, IMPLIED, STATUTORY OR OTHERWISE WITH RESPECT TO THE MATERIALS OR OTHERWISE, AND EXPRESSLY DISCLAIMS ALL IMPLIED WARRANTIES INCLUDING, WITHOUT LIMITATION, THE WARRANTIES OF DESIGN, OF NONINFRINGEMENT, MERCHANTABILITY OR FITNESS FOR A PARTICULAR PURPOSE, OR ARISING FROM A COURSE OF DEALING, TRADE USAGE, TRADE PRACTICE, OR INDUSTRY STANDARDS.

RD Center
Colorful Co.,Ltd
深圳市七彩虹科技发展有限公司

Size	Document Number	Rev
Custom	GA104H8-E10	A

Date: Monday, July 13, 2020 Sheet 32 of 57

Page33: PS: FBVDDQ PH2

FBVDD PH2 INPUT ANTI-BACKDRIVE

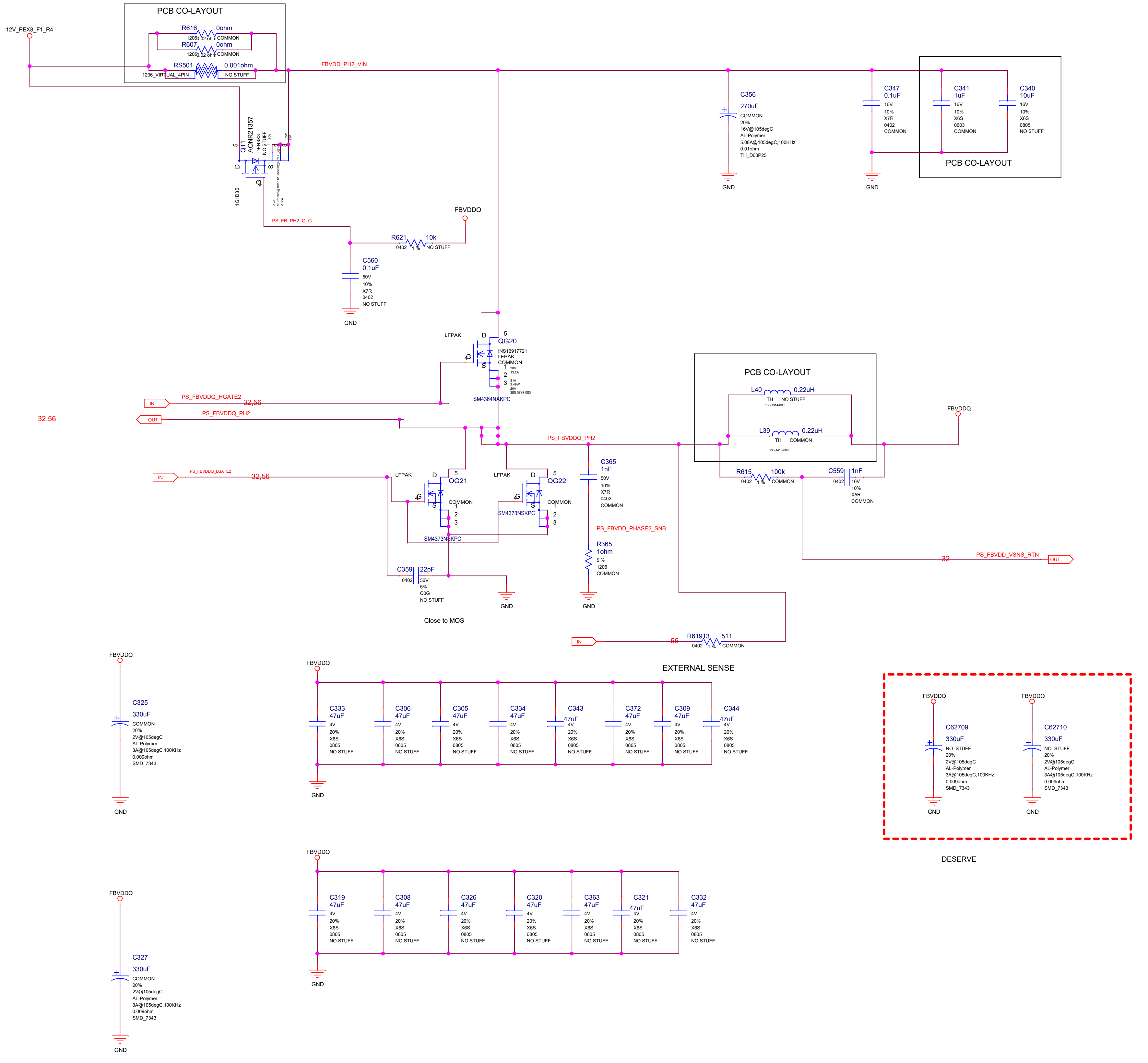
PCB CO-LAYOUT
12V_PEX8_F1_R4
R616 0ohm 1206 0.02 ohm COMMON
R607 0ohm 1206 0.02 ohm COMMON
RS501 0.001ohm 1206_VIRTUAL_4PIN NO STUFF
FBVDD_PH2_VIN
Q11 AONR21357 DFN3X3 NO STUFF
1G1D3S
-17A 10.7mohm@10V / 12.3mohm@4.5V / [1]@2.5V -136A
-30V 3.2W 25V
PS_FB_PH2_Q_G
FBVDDQ
R621 10k 0402 1 % NO STUFF
C560 0.1uF 50V 10% X7R 0402 NO STUFF
GND
C356 270uF COMMON 20% 16V@105degC AL-Polymer 5.08A@105degC,100KHz 0.01ohm TH_D63P25
C347 0.1uF 16V 10% X7R 0402 COMMON
C341 1uF 16V 10% X6S 0603 COMMON
C340 10uF 16V 10% X6S 0805 NO STUFF
PCB CO-LAYOUT
LFPAK
QG20 INS16917721 LFPAK COMMON
30V 13.2A 81A 2.49W 20V 300-0788-000
SM4364NAKPC
PS_FBVDDQ_HGATE2 32,56
IN
OUT
32,56
PS_FBVDDQ_PH2
PS_FBVDDQ_LGATE2 32,56
QG21 COMMON
SM4373NSKPC
QG22 COMMON
SM4373NSKPC
C359 22pF 0402 50V 5% C0G NO STUFF
Close to MOS
PS_FBVDDQ_PH2
C365 1nF 50V 10% X7R 0402 COMMON
PS_FBVDD_PHASE2_SNB
R365 1ohm 5 % 1206 COMMON
PCB CO-LAYOUT
L40 0.22uH TH NO STUFF 130-1314-000
L39 0.22uH TH COMMON 130-1413-000
FBVDDQ
R615 100k 0402 1 % COMMON
C559 1nF 0402 16V 10% X5R COMMON
32 PS_FBVDD_VSNS_RTN OUT
IN 56 R61913 511 0402 1 % COMMON
EXTERNAL SENSE
C325 330uF COMMON 20% 2V@105degC AL-Polymer 3A@105degC,100KHz 0.009ohm SMD_7343
C333 47uF 4V 20% X6S 0805 NO STUFF
C306 47uF 4V 20% X6S 0805 NO STUFF
C305 47uF 4V 20% X6S 0805 NO STUFF
C334 47uF 4V 20% X6S 0805 NO STUFF
C343 47uF 4V 20% X6S 0805 NO STUFF
C372 47uF 4V 20% X6S 0805 NO STUFF
C309 47uF 4V 20% X6S 0805 NO STUFF
C344 47uF 4V 20% X6S 0805 NO STUFF
C62709 330uF NO_STUFF 20% 2V@105degC AL-Polymer 3A@105degC,100KHz 0.009ohm SMD_7343
C62710 330uF NO_STUFF 20% 2V@105degC AL-Polymer 3A@105degC,100KHz 0.009ohm SMD_7343
DESERVE
C327 330uF COMMON 20% 2V@105degC AL-Polymer 3A@105degC,100KHz 0.009ohm SMD_7343
C319 47uF 4V 20% X6S 0805 NO STUFF
C308 47uF 4V 20% X6S 0805 NO STUFF
C326 47uF 4V 20% X6S 0805 NO STUFF
C320 47uF 4V 20% X6S 0805 NO STUFF
C363 47uF 4V 20% X6S 0805 NO STUFF
C321 47uF 4V 20% X6S 0805 NO STUFF
C332 47uF 4V 20% X6S 0805 NO STUFF

ASSEMBLY	<ASSEMBLY_DESCRIPTION>
PAGE DETAIL	PS: FBVDDQ PH2

ALL NVIDIA DESIGN SPECIFICATIONS, REFERENCE SPECIFICATIONS, REFERENCE BOARDS, FILES, DRAWINGS, DIAGNOSTICS, LISTS AND OTHER DOCUMENTS OR INFORMATION (TOGETHER AND SEPARATELY, 'MATERIALS') ARE BEING PROVIDED 'AS IS'. THE MATERIALS MAY CONTAIN KNOWN AND UNKNOWN VIOLATIONS OR DEVIATIONS OF INDUSTRY STANDARDS AND SPECIFICATIONS. NVIDIA MAKES NO WARRANTIES, EXPRESSED, IMPLIED, STATUTORY OR OTHERWISE WITH RESPECT TO THE MATERIALS OR OTHERWISE, AND EXPRESSLY DISCLAIMS ALL IMPLIED WARRANTIES INCLUDING, WITHOUT LIMITATION, THE WARRANTIES OF DESIGN, OF NONINFRINGEMENT, MERCHANTABILITY OR FITNESS FOR A PARTICULAR PURPOSE, OR ARISING FROM A COURSE OF DEALING, TRADE USAGE, TRADE PRACTICE, OR INDUSTRY STANDARDS.

RD Center
Colorful Co.,Ltd
深圳市七彩虹科技发展有限公司

Size	Document Number	Rev
Custom	GA104H8-E10	A

Date: Monday, August 03, 2020 Sheet 33 of 57

Page34: NVVDD CTR

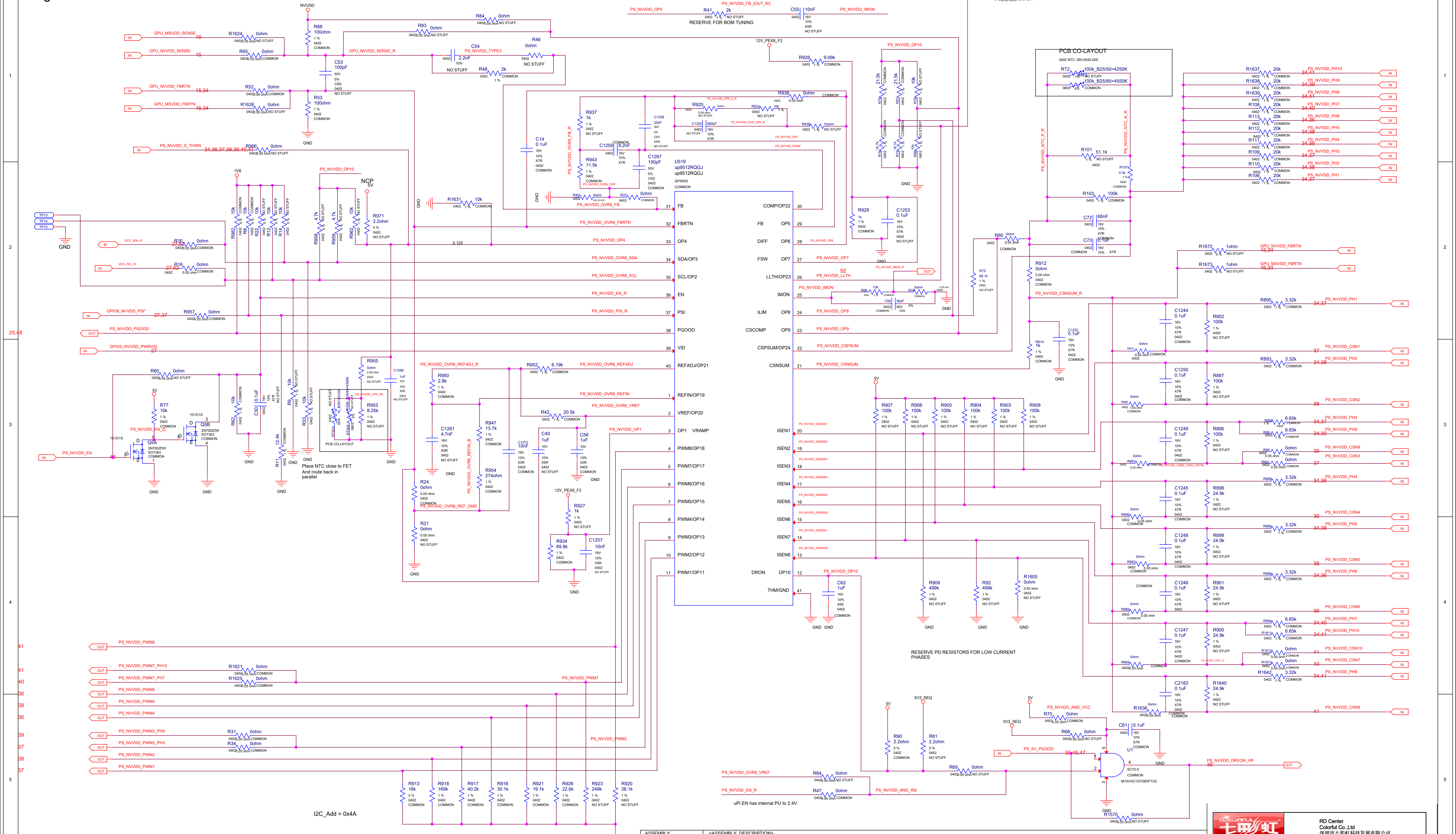

NVVDD
GPU_MSVDD_SENSE
GPU_NVVDD_SENSE
GPU_NVVDD_FBRTN
GPU_MSVDD_FBRTN
PS_NVVDD_S_THWN
RESERVE FOR BOM TUNING
PS_NVVDD_OP5
PS_NVVDD_FB_IOUT_RC
PS_NVVDD_IMON
PS_NVVDD_TYPE3
GPU_NVVDD_SENSE_R
12V_PEX8_F2
PS_NVVDD_OP10
PCB CO-LAYOUT
0402 NTC: 093-0042-000
100k_B25/50=4250K
100k_B25/85=4550K
PS_NVVDD_NTC_P_R
PS_NVVDD_NTC_N_R
PS_NVVDD_PH1
PS_NVVDD_PH2
PS_NVVDD_PH3
PS_NVVDD_PH4
PS_NVVDD_PH5
PS_NVVDD_PH6
PS_NVVDD_PH7
PS_NVVDD_PH8
PS_NVVDD_PH9
PS_NVVDD_PH10
U519
up9512RQGJ
up9512RQGJ
QFN5X5
COMMON
FB
FBRTN
OP4
SDA/OP3
SCL/OP2
EN
PSI
PGOOD
VID
REFADJ/OP21
REFIN/OP19
VREF/OP20
OP1 VRAMP
PWM8/OP18
PWM7/OP17
PWM6/OP16
PWM5/OP15
PWM4/OP14
PWM3/OP13
PWM2/OP12
PWM1/OP11
COMP/OP22
FB OP5
DIFF OP6
FSW OP7
LLTH/OP23
IMON
ILIM OP8
CSCOMP OP9
CSPSUM/OP24
CSNSUM
ISEN1
ISEN2
ISEN3
ISEN4
ISEN5
ISEN6
ISEN7
ISEN8
DRON OP10
THM/GND
PS_NVVDD_OVR8_FB
PS_NVVDD_OVR8_FBRTN
PS_NVVDD_OP4
PS_NVVDD_OVR8_SDA
PS_NVVDD_OVR8_SCL
PS_NVVDD_EN_R
PS_NVVDD_PSI_R
PS_NVVDD_OVR8_REFADJ_R
PS_NVVDD_OVR8_REFADJ
PS_NVVDD_OVR8_REFIN
PS_NVVDD_OVR8_VREF
PS_NVVDD_OVR8_REF_GND
PS_NVVDD_OP1
PS_NVVDD_OP7
PS_NVVDD_LLTH
PS_NVVDD_OP8
PS_NVVDD_OP9
PS_NVVDD_CSPSUM
PS_NVVDD_CSNSUM
PS_NVVDD_CSNSUM_R
TP13
TP14
TP15
GND
1V8
NCP
5V
I2C_SDA_R
I2C_SCL_R
GPIO6_NVVDD_PSI*
PS_NVVDD_PGOOD
GPIO0_NVVDD_PWMVID
PS_NVVDD_EN
PS_NVVDD_EN_Q
Q5A
Q5B
2N7002DW
SOT363
PCB CO-LAYOUT
Place NTC close to FET
And route back in
parallel
0.125
GPU_NVVDD_FBRTN
GPU_MSVDD_FBRTN
PS_NVVDD_CSN1
PS_NVVDD_CSN2
PS_NVVDD_CSN3
PS_NVVDD_CSN4
PS_NVVDD_CSN5
PS_NVVDD_CSN6
PS_NVVDD_CSN7
PS_NVVDD_CSN8
PS_NVVDD_CSN9
PS_NVVDD_CSN10
RESERVE PD RESISTORS FOR LOW CURRENT
PHASES
PS_NVVDD_PWM8
PS_NVVDD_PWM7_PH10
PS_NVVDD_PWM7_PH7
PS_NVVDD_PWM6
PS_NVVDD_PWM5
PS_NVVDD_PWM4
PS_NVVDD_PWM3_PH9
PS_NVVDD_PWM3_PH3
PS_NVVDD_PWM2
PS_NVVDD_PWM1
PS_NVVDD_PWM7
PS_NVVDD_PWM3
I2C_Add = 0x4A
PS_NVVDD_OVR8_VREF
PS_NVVDD_EN_R
PS_NVVDD_AND_IN2
uPi EN has internal PU to 2.4V
PS_NVVDD_AND_VCC
3V3_SEQ
PS_5V_PGOOD
U1
SC70-5
M74VHC1GT08DFT2G
PS_NVVDD_DRVON_VR
NO STUFF

ASSEMBLY	<ASSEMBLY_DESCRIPTION>
PAGE DETAIL	PS: NVVDD Controller

ALL NVIDIA DESIGN SPECIFICATIONS, REFERENCE SPECIFICATIONS, REFERENCE BOARDS, FILES, DRAWINGS, DIAGNOSTICS, LISTS AND OTHER DOCUMENTS OR INFORMATION (TOGETHER AND SEPARATELY, 'MATERIALS') ARE BEING PROVIDED 'AS IS'. THE MATERIALS MAY CONTAIN KNOWN AND UNKNOWN VIOLATIONS OR DEVIATIONS OF INDUSTRY STANDARDS AND SPECIFICATIONS. NVIDIA MAKES NO WARRANTIES, EXPRESSED, IMPLIED, STATUTORY OR OTHERWISE WITH RESPECT TO THE MATERIALS OR OTHERWISE, AND EXPRESSLY DISCLAIMS ALL IMPLIED WARRANTIES INCLUDING, WITHOUT LIMITATION, THE WARRANTIES OF DESIGN, OF NONINFRINGEMENT, MERCHANTABILITY OR FITNESS FOR A PARTICULAR PURPOSE, OR ARISING FROM A COURSE OF DEALING, TRADE USAGE, TRADE PRACTICE, OR INDUSTRY STANDARDS.

RD Center
Colorful Co.,Ltd
深圳市七彩虹科技发展有限公司

Size	Document Number	Rev
Custom	GA104H8-E10	A

Date: Tuesday, July 14, 2020 Sheet 34 of 57

BLANK PAGE

ASSEMBLY	<ASSEMBLY_DESCRIPTION>
PAGE DETAIL	BLANK PAGE

ALL NVIDIA DESIGN SPECIFICATIONS, REFERENCE SPECIFICATIONS, REFERENCE BOARDS, FILES, DRAWINGS, DIAGNOSTICS, LISTS AND OTHER DOCUMENTS OR INFORMATION (TOGETHER AND SEPARATELY, 'MATERIALS') ARE BEING PROVIDED 'AS IS'. THE MATERIALS MAY CONTAIN KNOWN AND UNKNOWN VIOLATIONS OR DEVIATIONS OF INDUSTRY STANDARDS AND SPECIFICATIONS. NVIDIA MAKES NO WARRANTIES, EXPRESSED, IMPLIED, STATUTORY OR OTHERWISE WITH RESPECT TO THE MATERIALS OR OTHERWISE, AND EXPRESSLY DISCLAIMS ALL IMPLIED WARRANTIES INCLUDING, WITHOUT LIMITATION, THE WARRANTIES OF DESIGN, OF NONINFRINGEMENT, MERCHANTABILITY OR FITNESS FOR A PARTICULAR PURPOSE, OR ARISING FROM A COURSE OF DEALING, TRADE USAGE, TRADE PRACTICE, OR INDUSTRY STANDARDS.

Page36: NVVDD PH4 & PH6

NVVDD PH4(PWM4)

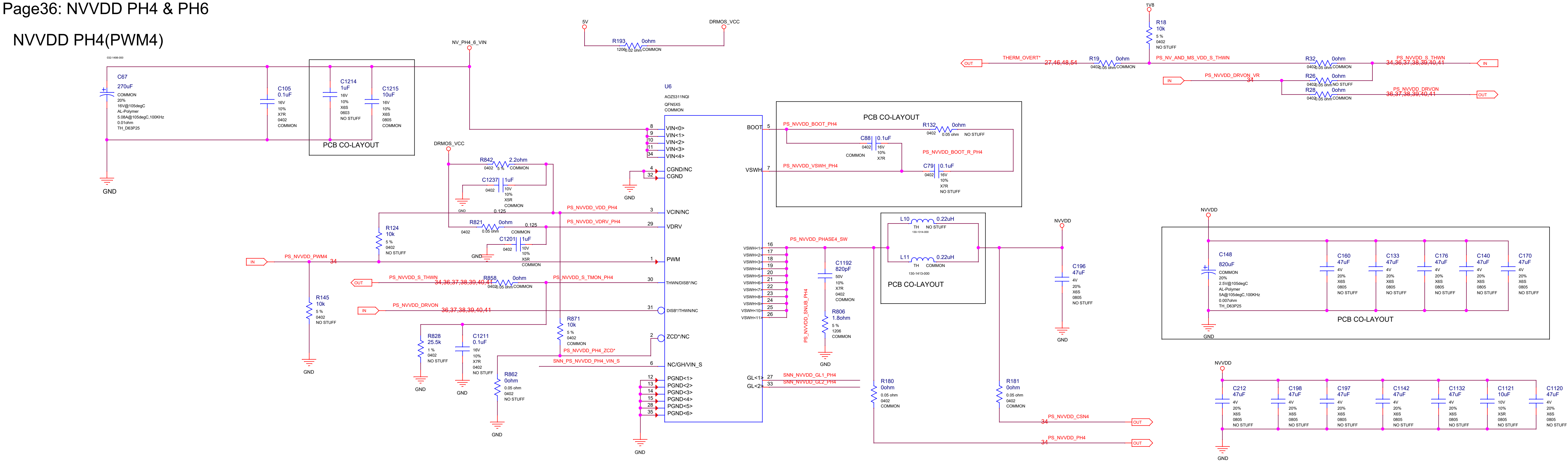

5V
DRMOS_VCC
R193 0ohm 1206 0.02 ohm COMMON
NV_PH4_6_VIN
C67 270uF COMMON 20% 16V@105degC AL-Polymer 5.08A@105degC,100KHz 0.01ohm TH_D63P25
C105 0.1uF 16V 10% X7R 0402 COMMON
C1214 1uF 16V 10% X6S 0603 NO STUFF
C1215 10uF 16V 10% X6S 0805 COMMON
PCB CO-LAYOUT
GND
U6
AOZ5311NQI
QFN5X5
COMMON
VIN<0> VIN<1> VIN<2> VIN<3> VIN<4>
CGND/NC
CGND
VCIN/NC
VDRV
PWM
THWN/DISB*/NC
DISB*/THWN/NC
ZCD*/NC
NC/GH/VIN_S
PGND<1> PGND<2> PGND<3> PGND<4> PGND<5> PGND<6>
BOOT
VSWH
GL<1>
GL<2>
DRMOS_VCC
R842 2.2ohm 0402 5% COMMON
C1237 1uF 0402 10V 10% X5R COMMON
PS_NVVDD_VDD_PH4
PS_NVVDD_VDRV_PH4
R821 0ohm 0402 0.05 ohm COMMON
C1201 1uF 0402 10V 10% X5R COMMON
R124 10k 5% 0402 NO STUFF
PS_NVVDD_PWM4
R145 10k 5% 0402 NO STUFF
PS_NVVDD_S_THWN
R858 0ohm 0402 0.05 ohm COMMON
PS_NVVDD_S_TMON_PH4
PS_NVVDD_DRVON
34,36,37,38,39,40,41
R828 25.5k 1% 0402 NO STUFF
C1211 0.1uF 16V 10% X7R 0402 NO STUFF
R871 10k 5% 0402 COMMON
PS_NVVDD_PH4_ZCD*
SNN_PS_NVVDD_PH4_VIN_S
R862 0ohm 0.05 ohm 0402 NO STUFF
PCB CO-LAYOUT
PS_NVVDD_BOOT_PH4
R132 0ohm 0402 0.05 ohm NO STUFF
C88 0.1uF 0402 16V 10% X7R COMMON
PS_NVVDD_BOOT_R_PH4
PS_NVVDD_VSWH_PH4
C79 0.1uF 0402 16V 10% X7R NO STUFF
PS_NVVDD_PHASE4_SW
C1192 820pF 50V 10% X7R 0402 COMMON
PS_NVVDD_SNUB_PH4
R806 1.8ohm 5% 1206 COMMON
SNN_NVVDD_GL1_PH4
SNN_NVVDD_GL2_PH4
L10 0.22uH TH NO STUFF
L11 0.22uH TH COMMON 130-1413-000
PCB CO-LAYOUT
R180 0ohm 0.05 ohm 0402 COMMON
R181 0ohm 0.05 ohm 0402 COMMON
PS_NVVDD_CSN4
PS_NVVDD_PH4
NVVDD
C196 47uF 4V 20% X6S 0805 NO STUFF
1V8
R18 10k 5% 0402 NO STUFF
THERM_OVERT*
27,46,48,54
R19 0ohm 0402 0.05 ohm COMMON
PS_NV_AND_MS_VDD_S_THWN
R32 0ohm 0402 0.05 ohm COMMON
PS_NVVDD_S_THWN
34,36,37,38,39,40,41
PS_NVVDD_DRVON_VR
R26 0ohm 0402 0.05 ohm NO STUFF
R28 0ohm 0402 0.05 ohm COMMON
PS_NVVDD_DRVON
34,36,37,38,39,40,41
OUT
IN
C148 820uF COMMON 20% 2.5V@105degC AL-Polymer 5A@105degC,100KHz 0.007ohm TH_D63P25
C160 47uF 4V 20% X6S 0805 NO STUFF
C133 47uF 4V 20% X6S 0805 NO STUFF
C176 47uF 4V 20% X6S 0805 NO STUFF
C140 47uF 4V 20% X6S 0805 NO STUFF
C170 47uF 4V 20% X6S 0805 NO STUFF
PCB CO-LAYOUT
C212 47uF 4V 20% X6S 0805 NO STUFF
C198 47uF 4V 20% X6S 0805 NO STUFF
C197 47uF 4V 20% X6S 0805 NO STUFF
C1142 47uF 4V 20% X6S 0805 NO STUFF
C1132 47uF 4V 20% X6S 0805 NO STUFF
C1121 10uF 10V 10% X5R 0805 NO STUFF
C1120 47uF 4V 20% X6S 0805 NO STUFF

NVVDD PH6(PWM6)

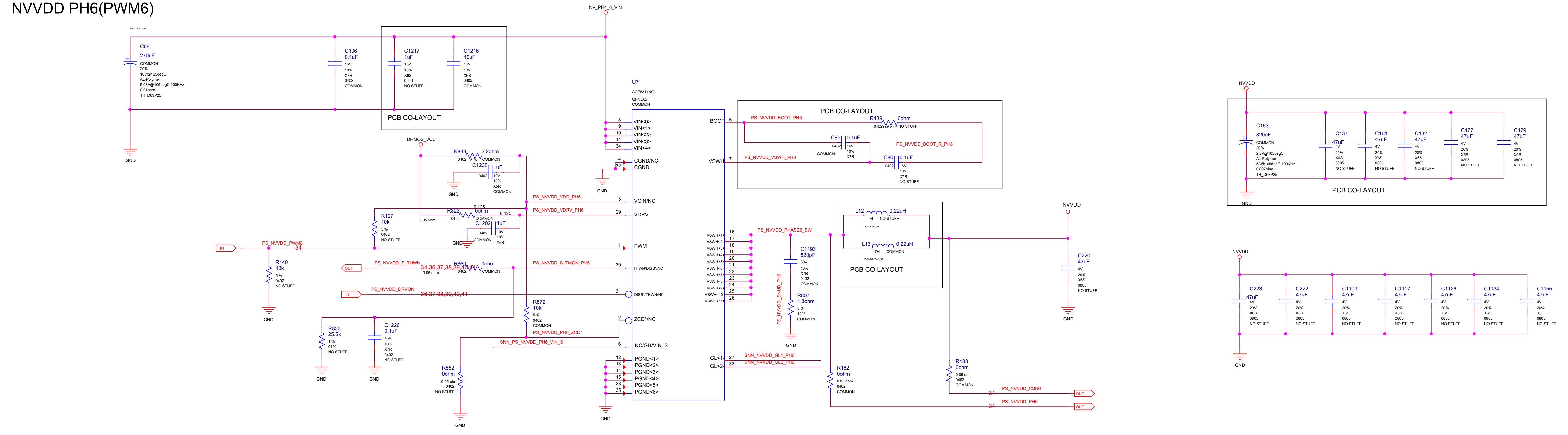

NV_PH4_6_VIN
C68 270uF COMMON 20% 16V@105degC AL-Polymer 5.08A@105degC,100KHz 0.01ohm TH_D63P25
C106 0.1uF 16V 10% X7R 0402 COMMON
C1217 1uF 16V 10% X6S 0603 NO STUFF
C1216 10uF 16V 10% X6S 0805 COMMON
PCB CO-LAYOUT
U7
AOZ5311NQI
QFN5X5
COMMON
DRMOS_VCC
R843 2.2ohm 0402 5% COMMON
C1238 1uF 0402 10V 10% X5R COMMON
PS_NVVDD_VDD_PH6
PS_NVVDD_VDRV_PH6
R822 0ohm 0402 COMMON
C1202 1uF 0402 10V 10% X5R COMMON
R127 10k 5% 0402 NO STUFF
PS_NVVDD_PWM6
R149 10k 5% 0402 NO STUFF
PS_NVVDD_S_THWN
R860 0ohm 0402 COMMON
PS_NVVDD_S_TMON_PH6
PS_NVVDD_DRVON
36,37,38,39,40,41
R833 25.5k 1% 0402 NO STUFF
C1226 0.1uF 16V 10% X7R 0402 NO STUFF
R872 10k 5% 0402 COMMON
PS_NVVDD_PH6_ZCD*
SNN_PS_NVVDD_PH6_VIN_S
R852 0ohm 0.05 ohm 0402 NO STUFF
PCB CO-LAYOUT
PS_NVVDD_BOOT_PH6
R139 0ohm 0402 0.05 ohm NO STUFF
C89 0.1uF 0402 16V 10% X7R COMMON
PS_NVVDD_BOOT_R_PH6
PS_NVVDD_VSWH_PH6
C80 0.1uF 0402 16V 10% X7R NO STUFF
PS_NVVDD_PHASE6_SW
C1193 820pF 50V 10% X7R 0402 COMMON
PS_NVVDD_SNUB_PH6
R807 1.8ohm 5% 1206 COMMON
SNN_NVVDD_GL1_PH6
SNN_NVVDD_GL2_PH6
L12 0.22uH TH NO STUFF
L13 0.22uH TH COMMON 130-1413-000
PCB CO-LAYOUT
R182 0ohm 0.05 ohm 0402 COMMON
R183 0ohm 0.05 ohm 0402 COMMON
PS_NVVDD_CSN6
PS_NVVDD_PH6
NVVDD
C220 47uF 4V 20% X6S 0805 NO STUFF
C153 820uF COMMON 20% 2.5V@105degC AL-Polymer 5A@105degC,100KHz 0.007ohm TH_D63P25
C137 47uF 4V 20% X6S 0805 NO STUFF
C161 47uF 4V 20% X6S 0805 NO STUFF
C132 47uF 4V 20% X6S 0805 NO STUFF
C177 47uF 4V 20% X6S 0805 NO STUFF
C179 47uF 4V 20% X6S 0805 NO STUFF
PCB CO-LAYOUT
C223 47uF 4V 20% X6S 0805 NO STUFF
C222 47uF 4V 20% X6S 0805 NO STUFF
C1109 47uF 4V 20% X6S 0805 NO STUFF
C1117 47uF 4V 20% X6S 0805 NO STUFF
C1126 47uF 4V 20% X6S 0805 NO STUFF
C1134 47uF 4V 20% X6S 0805 NO STUFF
C1155 47uF 4V 20% X6S 0805 NO STUFF
GND

ASSEMBLY	<ASSEMBLY_DESCRIPTION>
PAGE DETAIL	PS: NVVDD PH4, PH6

RD Center
Colorful Co.,Ltd
深圳市七彩虹科技发展有限公司

Size	Document Number	Rev
Custom	GA104H8-E10	A

Date: Tuesday, July 14, 2020 Sheet 36 of 57

ALL NVIDIA DESIGN SPECIFICATIONS, REFERENCE SPECIFICATIONS, REFERENCE BOARDS, FILES, DRAWINGS, DIAGNOSTICS, LISTS AND OTHER DOCUMENTS OR INFORMATION (TOGETHER AND SEPARATELY, 'MATERIALS') ARE BEING PROVIDED 'AS IS'. THE MATERIALS MAY CONTAIN KNOWN AND UNKNOWN VIOLATIONS OR DEVIATIONS OF INDUSTRY STANDARDS AND SPECIFICATIONS. NVIDIA MAKES NO WARRANTIES, EXPRESSED, IMPLIED, STATUTORY OR OTHERWISE WITH RESPECT TO THE MATERIALS OR OTHERWISE, AND EXPRESSLY DISCLAIMS ALL IMPLIED WARRANTIES INCLUDING, WITHOUT LIMITATION, THE WARRANTIES OF DESIGN, OF NONINFRINGEMENT, MERCHANTABILITY OR FITNESS FOR A PARTICULAR PURPOSE, OR ARISING FROM A COURSE OF DEALING, TRADE USAGE, TRADE PRACTICE, OR INDUSTRY STANDARDS.

Page37: NVVDD PH1 & PH3

NVVDD PH1(PWM1)

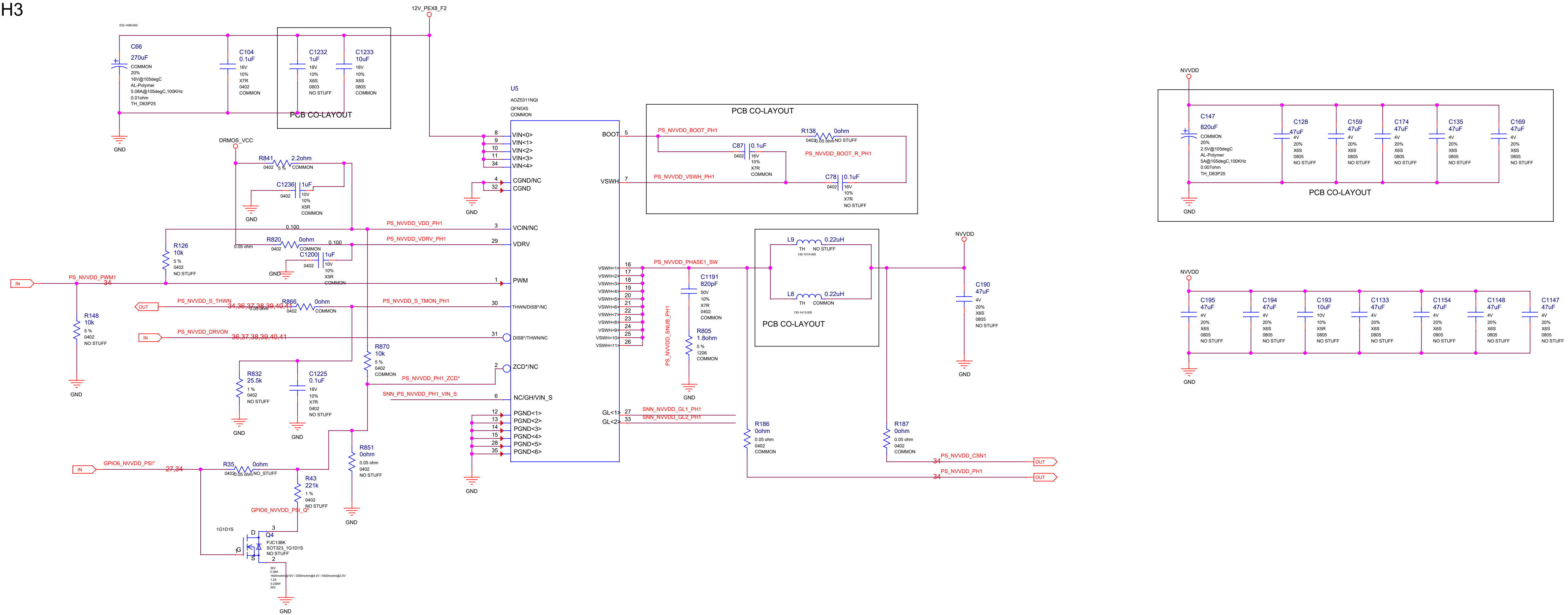

12V_PEX8_F2
C66 270uF COMMON 20% 16V@105degC AL-Polymer 5.08A@105degC,100KHz 0.01ohm TH_D63P25
C104 0.1uF 16V 10% X7R 0402 COMMON
C1232 1uF 16V 10% X6S 0603 NO STUFF
C1233 10uF 16V 10% X6S 0805 COMMON
PCB CO-LAYOUT
GND
U5 AOZ5311NQI QFN5X5 COMMON
VIN<0> VIN<1> VIN<2> VIN<3> VIN<4>
CGND/NC CGND
VCIN/NC VDRV PWM THWN/DISB*/NC DISB*/THWN/NC ZCD*/NC NC/GH/VIN_S
PGND<1> PGND<2> PGND<3> PGND<4> PGND<5> PGND<6>
BOOT VSWH GL<1> GL<2>
DRMOS_VCC
R841 2.2ohm 0402 5% COMMON
C1236 1uF 0402 10V 10% X5R COMMON
PS_NVVDD_VDD_PH1
R126 10k 5% 0402 NO STUFF
R820 0ohm 0402 COMMON
C1200 1uF 0402 10V 10% X5R COMMON
PS_NVVDD_VDRV_PH1
IN PS_NVVDD_PWM1 34
R148 10k 5% 0402 NO STUFF
OUT PS_NVVDD_S_THWN 34,36,37,38,39,40,41
R866 0ohm 0402 COMMON
PS_NVVDD_S_TMON_PH1
IN PS_NVVDD_DRVON 36,37,38,39,40,41
R870 10k 5% 0402 COMMON
R832 25.5k 1% 0402 NO STUFF
C1225 0.1uF 16V 10% X7R 0402 NO STUFF
PS_NVVDD_PH1_ZCD*
SNN_PS_NVVDD_PH1_VIN_S
R851 0ohm 0.05 ohm 0402 NO STUFF
IN GPIO6_NVVDD_PSI* 27,34
R35 0ohm 0402 NO STUFF
R43 221k 1% 0402 NO STUFF
GPIO6_NVVDD_PSI_G
Q4 PJC138K SOT323_1G1D1S NO STUFF
1G1D1S
PS_NVVDD_BOOT_PH1
R138 0ohm 0402 NO STUFF
C87 0.1uF 0402 16V 10% X7R COMMON
PS_NVVDD_BOOT_R_PH1
PS_NVVDD_VSWH_PH1
C78 0.1uF 0402 16V 10% X7R NO STUFF
VSWH<1>…VSWH<11>
PS_NVVDD_PHASE1_SW
C1191 820pF 50V 10% X7R 0402 COMMON
R805 1.8ohm 5% 1206 COMMON
PS_NVVDD_SNUB_PH1
L9 0.22uH TH NO STUFF
L8 0.22uH TH COMMON
NVVDD
C190 47uF 4V 20% X6S 0805 NO STUFF
SNN_NVVDD_GL1_PH1
SNN_NVVDD_GL2_PH1
R186 0ohm 0.05 ohm 0402 COMMON
R187 0ohm 0.05 ohm 0402 COMMON
34 PS_NVVDD_CSN1 OUT
34 PS_NVVDD_PH1 OUT
C147 820uF COMMON 20% 2.5V@105degC AL-Polymer 5A@105degC,100KHz 0.007ohm TH_D63P25
C128 47uF 4V 20% X6S 0805 NO STUFF
C159 47uF 4V 20% X6S 0805 NO STUFF
C174 47uF 4V 20% X6S 0805 NO STUFF
C135 47uF 4V 20% X6S 0805 NO STUFF
C169 47uF 4V 20% X6S 0805 NO STUFF
C195 47uF 4V 20% X6S 0805 NO STUFF
C194 47uF 4V 20% X6S 0805 NO STUFF
C193 10uF 10V 10% X5R 0805 NO STUFF
C1133 47uF 4V 20% X6S 0805 NO STUFF
C1154 47uF 4V 20% X6S 0805 NO STUFF
C1148 47uF 4V 20% X6S 0805 NO STUFF
C1147 47uF 4V 20% X6S 0805 NO STUFF

NVVDD PH3(PWM3)

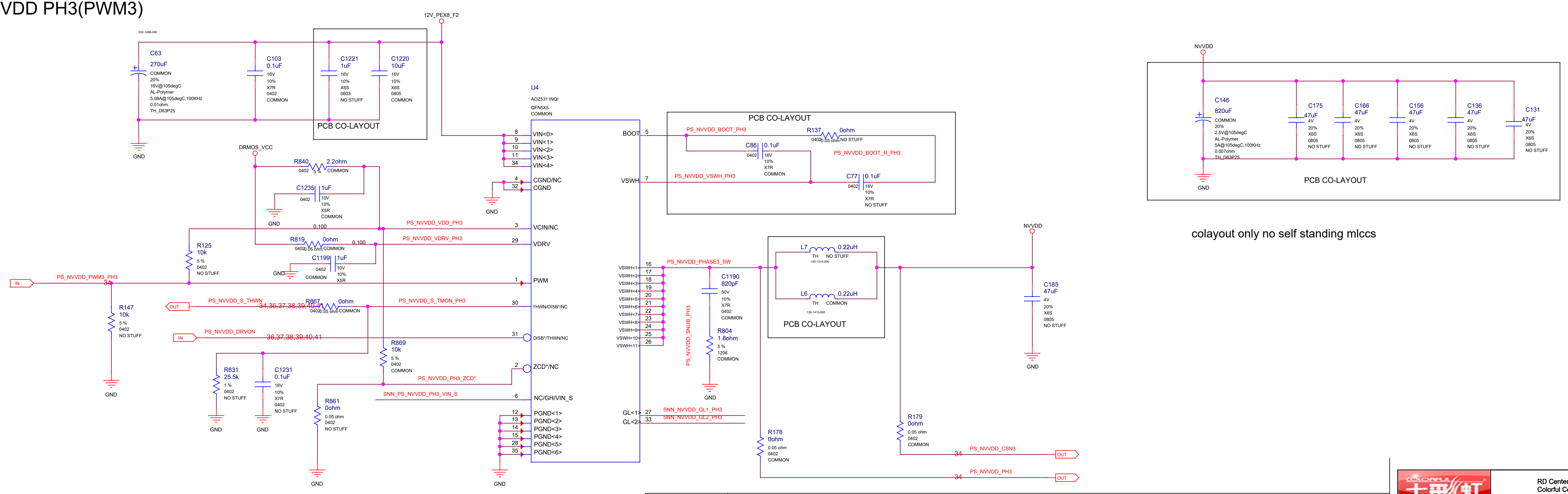

12V_PEX8_F2
C63 270uF COMMON 20% 16V@105degC AL-Polymer 5.08A@105degC,100KHz 0.01ohm TH_D63P25
C103 0.1uF 16V 10% X7R 0402 COMMON
C1221 1uF 16V 10% X6S 0603 NO STUFF
C1220 10uF 16V 10% X6S 0805 COMMON
PCB CO-LAYOUT
U4 AOZ5311NQI QFN5X5 COMMON
DRMOS_VCC
R840 2.2ohm 0402 5% COMMON
C1235 1uF 0402 10V 10% X5R COMMON
PS_NVVDD_VDD_PH3
R125 10k 5% 0402 NO STUFF
R819 0ohm 0402 COMMON
C1199 1uF 0402 10V 10% X5R COMMON
PS_NVVDD_VDRV_PH3
IN PS_NVVDD_PWM3 34
R147 10k 5% 0402 NO STUFF
OUT PS_NVVDD_S_THWN 34,36,37,38,39,40,41
R867 0ohm 0402 COMMON
PS_NVVDD_S_TMON_PH3
IN PS_NVVDD_DRVON 36,37,38,39,40,41
R869 10k 5% 0402 COMMON
R831 25.5k 1% 0402 NO STUFF
C1231 0.1uF 16V 10% X7R 0402 NO STUFF
PS_NVVDD_PH3_ZCD*
SNN_PS_NVVDD_PH3_VIN_S
R861 0ohm 0.05 ohm 0402 NO STUFF
PS_NVVDD_BOOT_PH3
R137 0ohm 0402 NO STUFF
C86 0.1uF 0402 16V 10% X7R COMMON
PS_NVVDD_BOOT_R_PH3
PS_NVVDD_VSWH_PH3
C77 0.1uF 0402 16V 10% X7R NO STUFF
PS_NVVDD_PHASE3_SW
C1190 820pF 50V 10% X7R 0402 COMMON
R804 1.8ohm 5% 1206 COMMON
PS_NVVDD_SNUB_PH3
L7 0.22uH TH NO STUFF
L6 0.22uH TH COMMON
NVVDD
C185 47uF 4V 20% X6S 0805 NO STUFF
SNN_NVVDD_GL1_PH3
SNN_NVVDD_GL2_PH3
R178 0ohm 0.05 ohm 0402 COMMON
R179 0ohm 0.05 ohm 0402 COMMON
34 PS_NVVDD_CSN3 OUT
34 PS_NVVDD_PH3 OUT
C146 820uF COMMON 20% 2.5V@105degC AL-Polymer 5A@105degC,100KHz 0.007ohm TH_D63P25
C175 47uF 4V 20% X6S 0805 NO STUFF
C166 47uF 4V 20% X6S 0805 NO STUFF
C156 47uF 4V 20% X6S 0805 NO STUFF
C136 47uF 4V 20% X6S 0805 NO STUFF
C131 47uF 4V 20% X6S 0805 NO STUFF
PCB CO-LAYOUT
GND

colayout only no self standing mlccs

ASSEMBLY	<ASSEMBLY_DESCRIPTION>
PAGE DETAIL	PS: NVVDD PH1, PH3

ALL NVIDIA DESIGN SPECIFICATIONS, REFERENCE SPECIFICATIONS, REFERENCE BOARDS, FILES, DRAWINGS, DIAGNOSTICS, LISTS AND OTHER DOCUMENTS OR INFORMATION (TOGETHER AND SEPARATELY, 'MATERIALS') ARE BEING PROVIDED 'AS IS'. THE MATERIALS MAY CONTAIN KNOWN AND UNKNOWN VIOLATIONS OR DEVIATIONS OF INDUSTRY STANDARDS AND SPECIFICATIONS. NVIDIA MAKES NO WARRANTIES, EXPRESSED, IMPLIED, STATUTORY OR OTHERWISE WITH RESPECT TO THE MATERIALS OR OTHERWISE AND EXPRESSLY DISCLAIMS ALL IMPLIED WARRANTIES INCLUDING, WITHOUT LIMITATION, THE WARRANTIES OF DESIGN, OF NONINFRINGEMENT, MERCHANTABILITY OR FITNESS FOR A PARTICULAR PURPOSE, OR ARISING FROM A COURSE OF DEALING, USAGE, TRADE PRACTICE, OR INDUSTRY STANDARDS.

RD Center
Colorful Co.,Ltd
深圳市七彩虹科技发展有限公司

Size	Document Number	Rev
Custom	GA104H8-E10	A
Date: Tuesday, July 14, 2020	Sheet 37 of 57	

Page38: NVVDD PH2 & PH5

NVVDD PH2(PWM2)

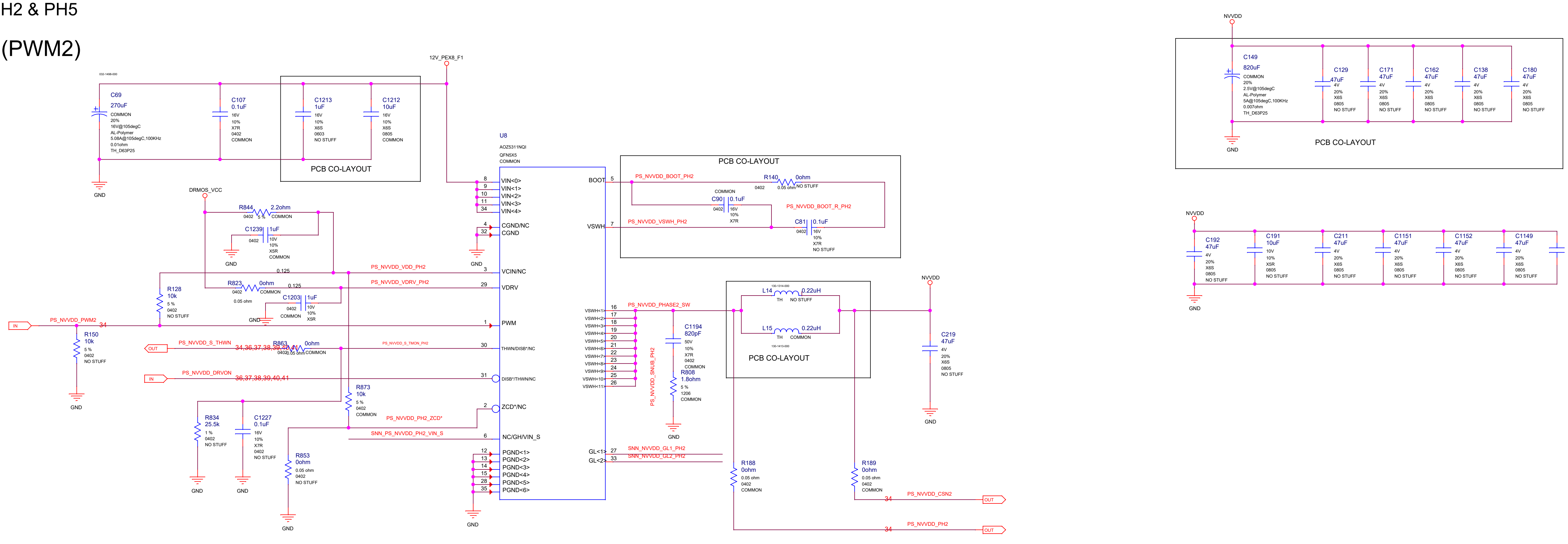

12V_PEX8_F1
C69 270uF COMMON 20% 16V@105degC AL-Polymer 5.08A@105degC,100KHz 0.01ohm TH_D63P25
C107 0.1uF 16V 10% X7R 0402 COMMON
C1213 1uF 16V 10% X6S 0603 NO STUFF
C1212 10uF 16V 10% X6S 0805 COMMON
PCB CO-LAYOUT
U8 AOZ5311NQI QFN5X5 COMMON
VIN<0> VIN<1> VIN<2> VIN<3> VIN<4>
CGND/NC CGND
VCIN/NC
VDRV
PWM
THWN/DISB*/NC
DISB*/THWN/NC
ZCD*/NC
NC/GH/VIN_S
PGND<1> PGND<2> PGND<3> PGND<4> PGND<5> PGND<6>
BOOT
VSWH
VSWH<1> … VSWH<11>
GL<1> GL<2>
DRMOS_VCC
R844 2.2ohm 0402 5% COMMON
C1239 1uF 0402 10V 10% X5R COMMON
R128 10k 5% 0402 NO STUFF
R823 0ohm 0402 0.05 ohm COMMON
C1203 1uF 0402 10V 10% X5R COMMON
PS_NVVDD_PWM2
R150 10k 5% 0402 NO STUFF
PS_NVVDD_S_THWN 34,36,37,38,39,40,41
R863 0ohm 0402 0.05 ohm COMMON
PS_NVVDD_S_TMON_PH2
PS_NVVDD_DRVON 36,37,38,39,40,41
R873 10k 5% 0402 COMMON
R834 25.5k 1% 0402 NO STUFF
C1227 0.1uF 16V 10% X7R 0402 NO STUFF
R853 0ohm 0.05 ohm 0402 NO STUFF
PS_NVVDD_PH2_ZCD*
SNN_PS_NVVDD_PH2_VIN_S
PS_NVVDD_VDD_PH2
PS_NVVDD_VDRV_PH2
PS_NVVDD_BOOT_PH2
R140 0ohm 0402 0.05 ohm NO STUFF
C90 0.1uF 0402 16V 10% X7R COMMON
PS_NVVDD_BOOT_R_PH2
C81 0.1uF 0402 16V 10% X7R COMMON
PS_NVVDD_VSWH_PH2
PS_NVVDD_PHASE2_SW
C1194 820pF 50V 10% X7R 0402 COMMON
R808 1.8ohm 5% 1206 COMMON
PS_NVVDD_SNUB_PH2
L14 0.22uH TH NO STUFF
L15 0.22uH TH COMMON
NVVDD
C219 47uF 4V 20% X6S 0805 NO STUFF
SNN_NVVDD_GL1_PH2
SNN_NVVDD_GL2_PH2
R188 0ohm 0.05 ohm 0402 COMMON
R189 0ohm 0.05 ohm 0402 COMMON
PS_NVVDD_CSN2
PS_NVVDD_PH2
C149 820uF COMMON 20% 2.5V@105degC AL-Polymer 5A@105degC,100KHz 0.007ohm TH_D63P25
C129 47uF 4V 20% X6S 0805 NO STUFF
C171 47uF
C162 47uF
C138 47uF
C180 47uF
C192 47uF 4V 20% X6S 0805 NO STUFF
C191 10uF 10V 10% X5R 0805 NO STUFF
C211 47uF
C1151 47uF
C1152 47uF
C1149 47uF
C1156 47uF
GND

NVVDD PH5(PWM5)

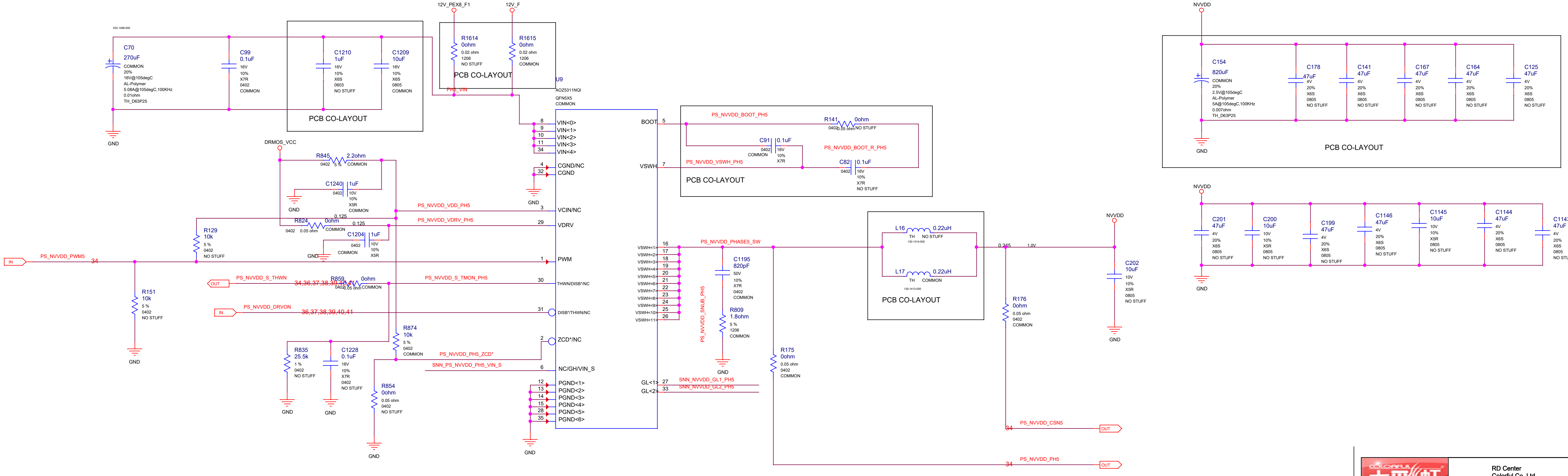

12V_PEX8_F1
12V_F
R1614 0ohm 0.02 ohm 1206 NO STUFF
R1615 0ohm 0.02 ohm 1206 COMMON
PCB CO-LAYOUT
PH5_VIN
C70 270uF COMMON 20% 16V@105degC AL-Polymer 5.08A@105degC,100KHz 0.01ohm TH_D63P25
C99 0.1uF 16V 10% X7R 0402 COMMON
C1210 1uF 16V 10% X6S 0603 NO STUFF
C1209 10uF 16V 10% X6S 0805 COMMON
U9 AOZ5311NQI QFN5X5 COMMON
VIN<0> VIN<1> VIN<2> VIN<3> VIN<4>
CGND/NC CGND
VCIN/NC
VDRV
PWM
THWN/DISB*/NC
DISB*/THWN/NC
ZCD*/NC
NC/GH/VIN_S
PGND<1> PGND<2> PGND<3> PGND<4> PGND<5> PGND<6>
BOOT
VSWH
VSWH<1> … VSWH<11>
GL<1> GL<2>
DRMOS_VCC
R845 2.2ohm 0402 5% COMMON
C1240 1uF 0402 10V 10% X5R COMMON
R129 10k 5% 0402 NO STUFF
R824 0ohm 0402 0.05 ohm COMMON
C1204 1uF 0402 10V 10% X5R COMMON
PS_NVVDD_PWM5
R151 10k 5% 0402 NO STUFF
PS_NVVDD_S_THWN 34,36,37,38,39,40,41
R859 0ohm 0402 0.05 ohm COMMON
PS_NVVDD_S_TMON_PH5
PS_NVVDD_DRVON 36,37,38,39,40,41
R874 10k 5% 0402 COMMON
R835 25.5k 1% 0402 NO STUFF
C1228 0.1uF 16V 10% X7R 0402 NO STUFF
R854 0ohm 0.05 ohm 0402 NO STUFF
PS_NVVDD_PH5_ZCD*
SNN_PS_NVVDD_PH5_VIN_S
PS_NVVDD_VDD_PH5
PS_NVVDD_VDRV_PH5
PS_NVVDD_BOOT_PH5
R141 0ohm 0402 0.05 ohm NO STUFF
C91 0.1uF 0402 16V 10% X7R COMMON
PS_NVVDD_BOOT_R_PH5
C82 0.1uF 0402 16V 10% X7R NO STUFF
PS_NVVDD_VSWH_PH5
PS_NVVDD_PHASE5_SW
C1195 820pF 50V 10% X7R 0402 COMMON
R809 1.8ohm 5% 1206 COMMON
PS_NVVDD_SNUB_PH5
L16 0.22uH TH NO STUFF
L17 0.22uH TH COMMON
NVVDD
C202 10uF 10V 10% X5R 0805 NO STUFF
R176 0ohm 0.05 ohm 0402 COMMON
R175 0ohm 0.05 ohm 0402 COMMON
SNN_NVVDD_GL1_PH5
SNN_NVVDD_GL2_PH5
PS_NVVDD_CSN5
PS_NVVDD_PH5
C154 820uF COMMON 20% 2.5V@105degC AL-Polymer 5A@105degC,100KHz 0.007ohm TH_D63P25
C178 47uF 4V 20% X6S 0805 NO STUFF
C141 47uF
C167 47uF
C164 47uF
C125 47uF
C201 47uF 4V 20% X6S 0805 NO STUFF
C200 10uF 10V 10% X5R 0805 NO STUFF
C199 47uF
C1146 47uF
C1145 10uF
C1144 47uF
C1143 47uF
GND

ASSEMBLY	<ASSEMBLY_DESCRIPTION>
PAGE DETAIL	PS: NVVDD PH2, PH5

ALL NVIDIA DESIGN SPECIFICATIONS, REFERENCE SPECIFICATIONS, REFERENCE BOARDS, FILES, DRAWINGS, DIAGNOSTICS, LISTS AND OTHER DOCUMENTS OR INFORMATION (TOGETHER AND SEPARATELY, 'MATERIALS') ARE BEING PROVIDED 'AS IS'. THE MATERIALS MAY CONTAIN KNOWN AND UNKNOWN VIOLATIONS OR DEVIATIONS OF INDUSTRY STANDARDS AND SPECIFICATIONS. NVIDIA MAKES NO WARRANTIES, EXPRESSED, IMPLIED, STATUTORY OR OTHERWISE WITH RESPECT TO THE MATERIALS OR OTHERWISE, AND EXPRESSLY DISCLAIMS ALL IMPLIED WARRANTIES INCLUDING, WITHOUT LIMITATION, THE WARRANTIES OF DESIGN, OF NONINFRINGEMENT, MERCHANTABILITY OR FITNESS FOR A PARTICULAR PURPOSE, OR ARISING FROM A COURSE OF DEALING, TRADE USAGE, TRADE PRACTICE, OR INDUSTRY STANDARDS.

RD Center
Colorful Co.,Ltd
深圳市七彩虹科技发展有限公司

Size	Document Number	Rev
Custom	GA104H8-E10	A

Date: Tuesday, July 14, 2020 Sheet 38 of 57

Page39: NVVDD PH9

NVVDD PH9(PWM3)

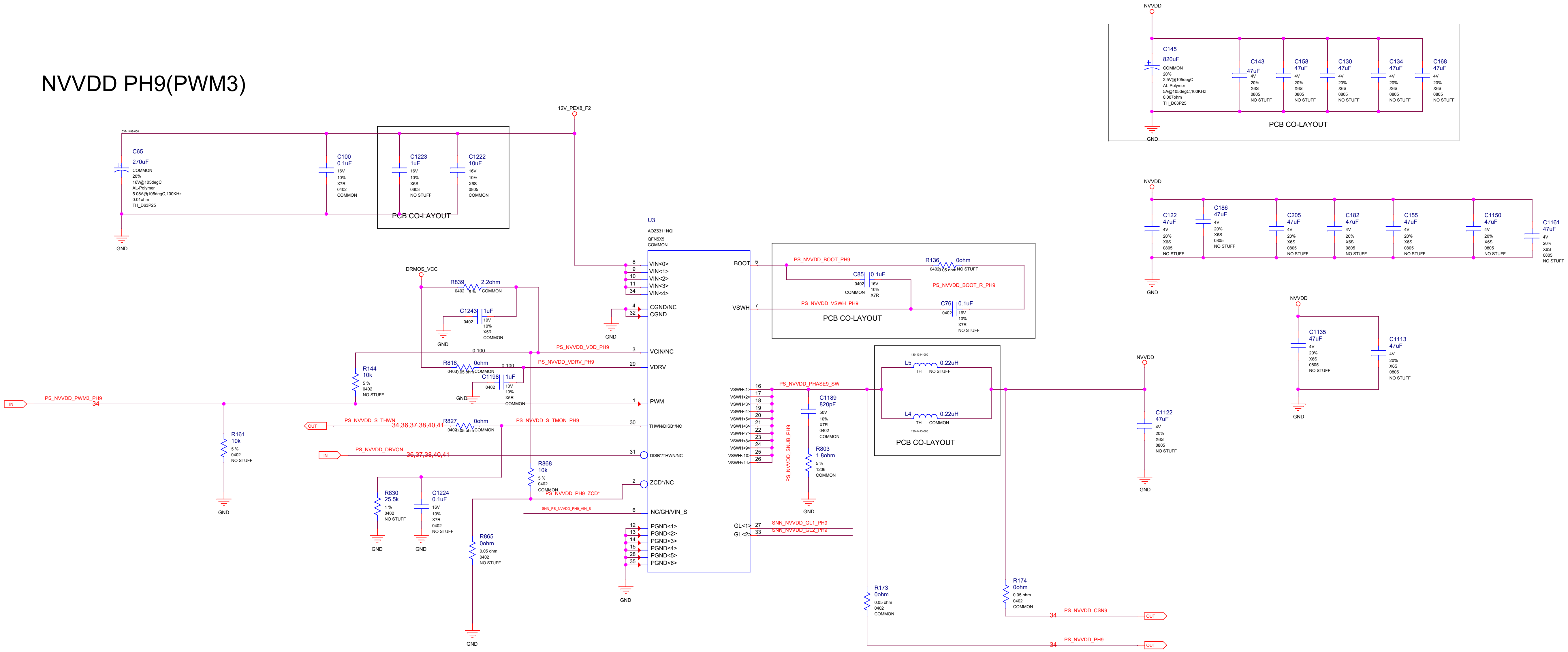

12V_PEX8_F2
C65 270uF COMMON 20% 16V@105degC AL-Polymer 5.08A@105degC,100KHz 0.01ohm TH_D63P25
C100 0.1uF 16V 10% X7R 0402 COMMON
C1223 1uF 16V 10% X6S 0603 NO STUFF
C1222 10uF 16V 10% X6S 0805 COMMON
PCB CO-LAYOUT
GND
U3 AOZ5311NQI QFN5X5 COMMON
VIN<0> VIN<1> VIN<2> VIN<3> VIN<4>
CGND/NC CGND
VCIN/NC
VDRV
PWM
THWN/DISB*/NC
DISB*/THWN/NC
ZCD*/NC
NC/GH/VIN_S
PGND<1> PGND<2> PGND<3> PGND<4> PGND<5> PGND<6>
BOOT
VSWH
VSWH<1> … VSWH<11>
GL<1> GL<2>
DRMOS_VCC
R839 2.2ohm 0402 5% COMMON
C1243 1uF 0402 10V 10% X5R COMMON
R818 0ohm 0402 0.05 ohm COMMON
C1198 1uF 0402 10V 10% X5R COMMON
R144 10k 5% 0402 NO STUFF
R161 10k 5% 0402 NO STUFF
R827 0ohm 0402 0.05 ohm COMMON
R868 10k 5% 0402 COMMON
R830 25.5k 1% 0402 NO STUFF
C1224 0.1uF 16V 10% X7R 0402 NO STUFF
R865 0ohm 0.05 ohm 0402 NO STUFF
PS_NVVDD_PWM3_PH9 34
PS_NVVDD_VDD_PH9
PS_NVVDD_VDRV_PH9
PS_NVVDD_S_THWN 34,36,37,38,40,41
PS_NVVDD_S_TMON_PH9
PS_NVVDD_DRVON 36,37,38,40,41
PS_NVVDD_PH9_ZCD*
SNN_PS_NVVDD_PH9_VIN_S
IN OUT
PS_NVVDD_BOOT_PH9
R136 0ohm 0402 0.05 ohm NO STUFF
C85 0.1uF 0402 16V 10% X7R COMMON
PS_NVVDD_BOOT_R_PH9
PS_NVVDD_VSWH_PH9
C76 0.1uF 0402 16V 10% X7R NO STUFF
PS_NVVDD_PHASE9_SW
C1189 820pF 50V 10% X7R 0402 COMMON
PS_NVVDD_SNUB_PH9
R803 1.8ohm 5% 1206 COMMON
SNN_NVVDD_GL1_PH9
SNN_NVVDD_GL2_PH9
L5 0.22uH TH NO STUFF
L4 0.22uH TH COMMON
R173 0ohm 0.05 ohm 0402 COMMON
R174 0ohm 0.05 ohm 0402 COMMON
PS_NVVDD_CSN9 34
PS_NVVDD_PH9 34
NVVDD
C1122 47uF 4V 20% X6S 0805 NO STUFF
C145 820uF COMMON 20% 2.5V@105degC AL-Polymer 5A@105degC,100KHz 0.007ohm TH_D63P25
C143 47uF 4V 20% X6S 0805 NO STUFF
C158 47uF 4V 20% X6S 0805 NO STUFF
C130 47uF 4V 20% X6S 0805 NO STUFF
C134 47uF 4V 20% X6S 0805 NO STUFF
C168 47uF 4V 20% X6S 0805 NO STUFF
C122 47uF 4V 20% X6S 0805 NO STUFF
C186 47uF 4V 20% X6S 0805 NO STUFF
C205 47uF 4V 20% X6S 0805 NO STUFF
C182 47uF 4V 20% X6S 0805 NO STUFF
C155 47uF 4V 20% X6S 0805 NO STUFF
C1150 47uF 4V 20% X6S 0805 NO STUFF
C1161 47uF 4V 20% X6S 0805 NO STUFF
C1135 47uF 4V 20% X6S 0805 NO STUFF
C1113 47uF 4V 20% X6S 0805 NO STUFF

ASSEMBLY	<ASSEMBLY_DESCRIPTION>
PAGE DETAIL	PS: NVVDD PH9

ALL NVIDIA DESIGN SPECIFICATIONS, REFERENCE SPECIFICATIONS, REFERENCE BOARDS, FILES, DRAWINGS, DIAGNOSTICS, LISTS AND OTHER DOCUMENTS OR INFORMATION (TOGETHER AND SEPARATELY, 'MATERIALS') ARE BEING PROVIDED 'AS IS'. THE MATERIALS MAY CONTAIN KNOWN AND UNKNOWN VIOLATIONS OR DEVIATIONS OF INDUSTRY STANDARDS AND SPECIFICATIONS. NVIDIA MAKES NO WARRANTIES, EXPRESSED, IMPLIED, STATUTORY OR OTHERWISE WITH RESPECT TO THE MATERIALS OR OTHERWISE, AND EXPRESSLY DISCLAIMS ALL IMPLIED WARRANTIES INCLUDING, WITHOUT LIMITATION, THE WARRANTIES OF DESIGN, OF NONINFRINGEMENT, MERCHANTABILITY OR FITNESS FOR A PARTICULAR PURPOSE, OR ARISING FROM A COURSE OF DEALING, TRADE USAGE, TRADE PRACTICE, OR INDUSTRY STANDARDS.

RD Center
Colorful Co.,Ltd
深圳市七彩虹科技发展有限公司

Size	Document Number	Rev
Custom	GA104H8-E10	A

Date: Tuesday, July 14, 2020 Sheet 39 of 57

Page40: NVVDD PH7

NVVDD PH7(PWM7)

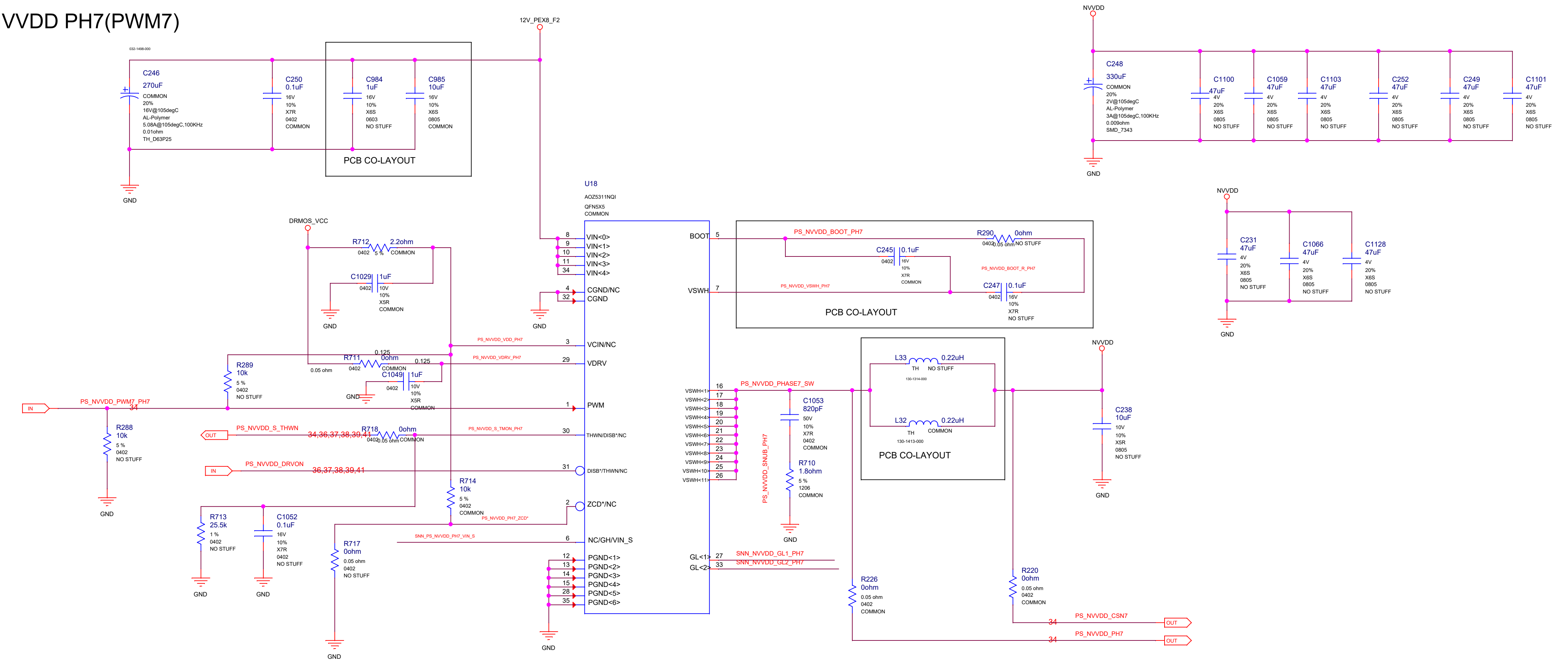
12V_PEX8_F2
C246
270uF
COMMON
20%
16V@105degC
AL-Polymer
5.08A@105degC,100KHz
0.01ohm
TH_D63P25
C250
0.1uF
16V
10%
X7R
0402
COMMON
C984
1uF
16V
10%
X6S
0603
NO STUFF
C985
10uF
16V
10%
X6S
0805
COMMON
PCB CO-LAYOUT
GND
NVVDD
C248
330uF
COMMON
20%
2V@105degC
AL-Polymer
3A@105degC,100KHz
0.009ohm
SMD_7343
C1100
47uF
C1059
47uF
C1103
47uF
C252
47uF
C249
47uF
C1101
47uF
4V
20%
X6S
0805
NO STUFF
C231
47uF
C1066
47uF
C1128
47uF
U18
AOZ5311NQI
QFN5X5
COMMON
DRMOS_VCC
R712
2.2ohm
0402
5 %
COMMON
C1029
1uF
10V
10%
X5R
R711
0ohm
0.05 ohm
0.125
C1049
1uF
R289
10k
5 %
0402
NO STUFF
R288
10k
IN
PS_NVVDD_PWM7_PH7
34
OUT
PS_NVVDD_S_THWN
34,36,37,38,39,41
R718
0ohm
PS_NVVDD_DRVON
36,37,38,39,41
R713
25.5k
1 %
C1052
0.1uF
R717
0ohm
R714
10k
PS_NVVDD_VDD_PH7
PS_NVVDD_VDRV_PH7
PS_NVVDD_S_TMON_PH7
PS_NVVDD_PH7_ZCD*
SNN_PS_NVVDD_PH7_VIN_S
VIN<0>
VIN<1>
VIN<2>
VIN<3>
VIN<4>
CGND/NC
CGND
VCIN/NC
VDRV
PWM
THWN/DISB*/NC
DISB*/THWN/NC
ZCD*/NC
NC/GH/VIN_S
PGND<1>
PGND<2>
PGND<3>
PGND<4>
PGND<5>
PGND<6>
BOOT
VSWH
VSWH<1>
VSWH<2>
VSWH<3>
VSWH<4>
VSWH<5>
VSWH<6>
VSWH<7>
VSWH<8>
VSWH<9>
VSWH<10>
VSWH<11>
GL<1>
GL<2>
SNN_NVVDD_GL1_PH7
SNN_NVVDD_GL2_PH7
PS_NVVDD_BOOT_PH7
R290
0ohm
NO STUFF
PS_NVVDD_BOOT_R_PH7
C245
0.1uF
C247
0.1uF
PS_NVVDD_VSWH_PH7
PS_NVVDD_PHASE7_SW
PS_NVVDD_SNUB_PH7
C1053
820pF
50V
R710
1.8ohm
1206
L33
0.22uH
TH
L32
0.22uH
C238
10uF
R226
0ohm
R220
0ohm
PS_NVVDD_CSN7
PS_NVVDD_PH7

ASSEMBLY	<ASSEMBLY_DESCRIPTION>
PAGE DETAIL	PS: NVVDD PH7

ALL NVIDIA DESIGN SPECIFICATIONS, REFERENCE SPECIFICATIONS, REFERENCE BOARDS, FILES, DRAWINGS, DIAGNOSTICS, LISTS AND OTHER DOCUMENTS OR INFORMATION (TOGETHER AND SEPARATELY, 'MATERIALS') ARE BEING PROVIDED 'AS IS'. THE MATERIALS MAY CONTAIN KNOWN AND UNKNOWN VIOLATIONS OR DEVIATIONS OF INDUSTRY STANDARDS AND SPECIFICATIONS. NVIDIA MAKES NO WARRANTIES, EXPRESSED, IMPLIED, STATUTORY OR OTHERWISE WITH RESPECT TO THE MATERIALS OR OTHERWISE, AND EXPRESSLY DISCLAIMS ALL IMPLIED WARRANTIES INCLUDING, WITHOUT LIMITATION, THE WARRANTIES OF DESIGN, OF NONINFRINGEMENT, MERCHANTABILITY OR FITNESS FOR A PARTICULAR PURPOSE, OR ARISING FROM A COURSE OF DEALING, TRADE USAGE, TRADE PRACTICE, OR INDUSTRY STANDARDS.

RD Center
Colorful Co.,Ltd
深圳市七彩虹科技发展有限公司

Size	Document Number	Rev
Custom	GA104H8-E10	A

Date: Tuesday, July 14, 2020 Sheet 40 of 57

Page41: NVVDD PH10 & 8

NVVDD PH10(PWM7)

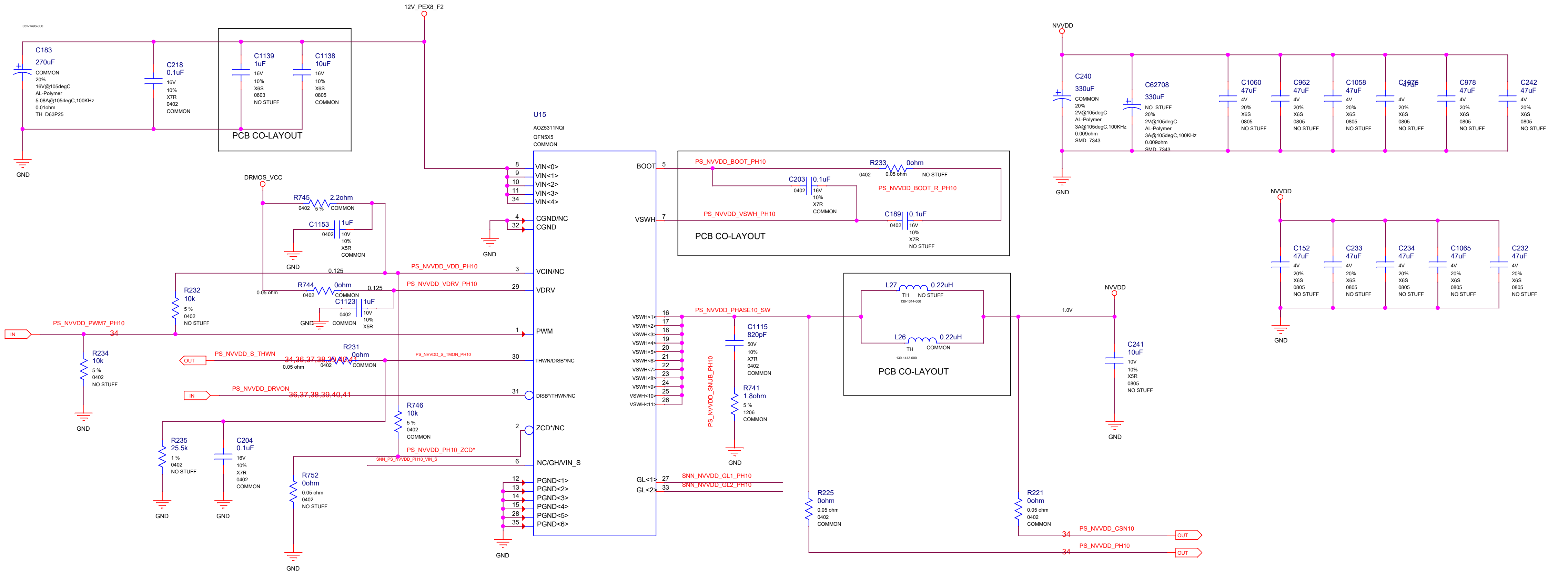
12V_PEX8_F2
C183
270uF
COMMON
20%
16V@105degC
AL-Polymer
5.08A@105degC,100KHz
0.01ohm
TH_D63P25
C218
0.1uF
16V
10%
X7R
0402
COMMON
C1139
1uF
16V
10%
X6S
0603
NO STUFF
C1138
10uF
16V
10%
X6S
0805
COMMON
PCB CO-LAYOUT
GND
U15
AOZ5311NQI
QFN5X5
COMMON
DRMOS_VCC
R745 2.2ohm
0402 5 % COMMON
C1153 1uF
0402 10V 10% X5R COMMON
VIN<0>
VIN<1>
VIN<2>
VIN<3>
VIN<4>
CGND/NC
CGND
VCIN/NC
VDRV
PWM
THWN/DISB*/NC
DISB*/THWN/NC
ZCD*/NC
NC/GH/VIN_S
PGND<1>
PGND<2>
PGND<3>
PGND<4>
PGND<5>
PGND<6>
BOOT
VSWH
GL<1>
GL<2>
PS_NVVDD_VDD_PH10
PS_NVVDD_VDRV_PH10
R744 0ohm
0402 COMMON
C1123 1uF
0402 10V 10% X5R COMMON
R232
10k
5 %
0402
NO STUFF
PS_NVVDD_PWM7_PH10
IN
34
R234
10k
5 %
0402
NO STUFF
R231 0ohm
0402 COMMON
PS_NVVDD_S_THWN
OUT
34,36,37,38,39,40,41
PS_NVVDD_S_TMON_PH10
PS_NVVDD_DRVON
36,37,38,39,40,41
R746
10k
5 %
0402
COMMON
PS_NVVDD_PH10_ZCD*
SNN_PS_NVVDD_PH10_VIN_S
R235
25.5k
1 %
0402
NO STUFF
C204
0.1uF
16V
10%
X7R
0402
COMMON
R752
0ohm
0.05 ohm
0402
NO STUFF
PS_NVVDD_BOOT_PH10
R233 0ohm
0402 NO STUFF
C203 0.1uF
0402 16V 10% X7R COMMON
PS_NVVDD_BOOT_R_PH10
PS_NVVDD_VSWH_PH10
C189 0.1uF
0402 16V 10% X7R NO STUFF
PCB CO-LAYOUT
PS_NVVDD_PHASE10_SW
C1115
820pF
50V
10%
X7R
0402
COMMON
R741
1.8ohm
5 %
1206
COMMON
PS_NVVDD_SNUB_PH10
SNN_NVVDD_GL1_PH10
SNN_NVVDD_GL2_PH10
L27 0.22uH
TH NO STUFF
L26 0.22uH
TH COMMON
PCB CO-LAYOUT
1.0V
NVVDD
C241
10uF
10V
10%
X5R
0805
NO STUFF
R225
0ohm
0.05 ohm
0402
COMMON
R221
0ohm
0.05 ohm
0402
COMMON
PS_NVVDD_CSN10
PS_NVVDD_PH10
OUT
C240
330uF
COMMON
20%
2V@105degC
AL-Polymer
3A@105degC,100KHz
0.009ohm
SMD_7343
C62708
330uF
NO_STUFF
20%
2V@105degC
AL-Polymer
3A@105degC,100KHz
0.009ohm
SMD_7343
C1060 47uF
C962 47uF
C1058 47uF
C1076 47uF
C978 47uF
C242 47uF
4V
20%
X6S
0805
NO STUFF
C152 47uF
C233 47uF
C234 47uF
C1065 47uF
C232 47uF
GND

NVVDD PH8(PWM8)

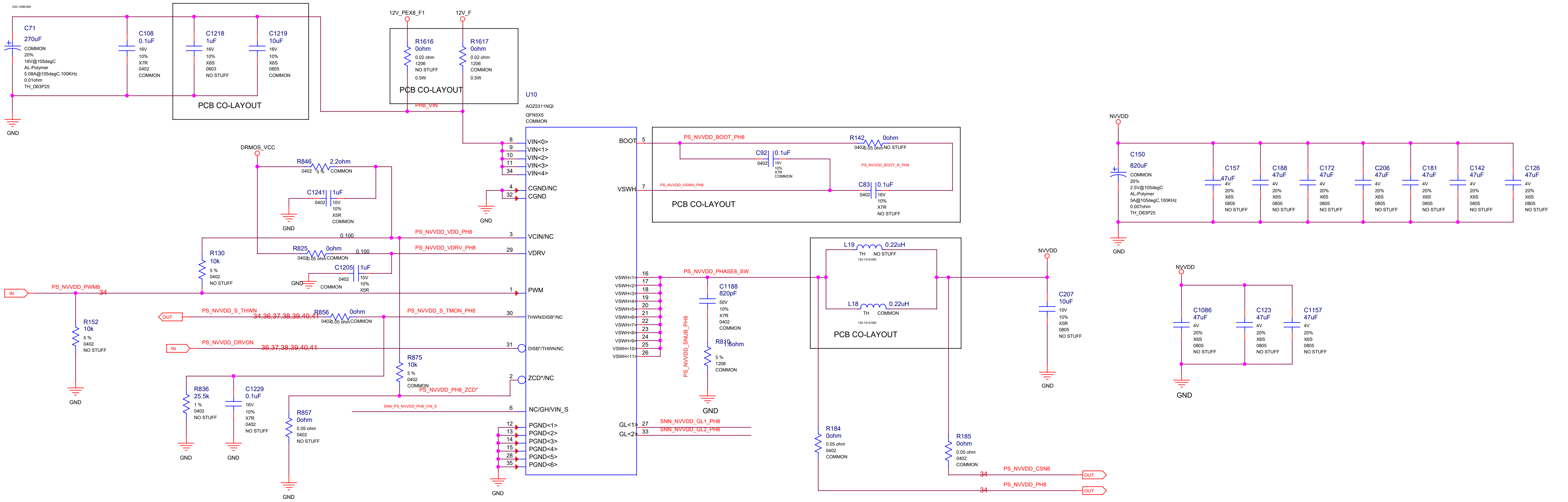
C71
270uF
COMMON
20%
16V@105degC
AL-Polymer
5.08A@105degC,100KHz
0.01ohm
TH_D63P25
C108
0.1uF
16V
10%
X7R
0402
COMMON
C1218
1uF
16V
10%
X6S
0603
NO STUFF
C1219
10uF
16V
10%
X6S
0805
COMMON
PCB CO-LAYOUT
12V_PEX8_F1
12V_F
R1616
0ohm
0.02 ohm
1206
NO STUFF
0.5W
R1617
0ohm
0.02 ohm
1206
COMMON
0.5W
PCB CO-LAYOUT
PH8_VIN
U10
AOZ5311NQI
QFN5X5
COMMON
DRMOS_VCC
R846 2.2ohm
0402 5 % COMMON
C1241 1uF
0402 10V 10% X5R COMMON
PS_NVVDD_VDD_PH8
PS_NVVDD_VDRV_PH8
R825 0ohm
0402 0.05 ohm COMMON
C1205 1uF
0402 10V 10% X5R COMMON
R130
10k
5 %
0402
NO STUFF
PS_NVVDD_PWM8
IN
34
R152
10k
5 %
0402
NO STUFF
PS_NVVDD_S_THWN
OUT
34,36,37,38,39,40,41
R856 0ohm
0402 0.05 ohm COMMON
PS_NVVDD_S_TMON_PH8
PS_NVVDD_DRVON
36,37,38,39,40,41
R875
10k
5 %
0402
COMMON
PS_NVVDD_PH8_ZCD*
SNN_PS_NVVDD_PH8_VIN_S
R836
25.5k
1 %
0402
NO STUFF
C1229
0.1uF
16V
10%
X7R
0402
NO STUFF
R857
0ohm
0.05 ohm
0402
NO STUFF
VIN<0>
VIN<1>
VIN<2>
VIN<3>
VIN<4>
CGND/NC
CGND
VCIN/NC
VDRV
PWM
THWN/DISB*/NC
DISB*/THWN/NC
ZCD*/NC
NC/GH/VIN_S
PGND<1>
PGND<2>
PGND<3>
PGND<4>
PGND<5>
PGND<6>
BOOT
VSWH
GL<1>
GL<2>
PS_NVVDD_BOOT_PH8
R142 0ohm
0402 NO STUFF
C92 0.1uF
0402 16V 10% X7R COMMON
PS_NVVDD_BOOT_R_PH8
PS_NVVDD_VSWH_PH8
C83 0.1uF
0402 16V 10% X7R NO STUFF
PCB CO-LAYOUT
PS_NVVDD_PHASE8_SW
C1188
820pF
50V
10%
X7R
0402
COMMON
R810 1.8ohm
5 %
1206
COMMON
PS_NVVDD_SNUB_PH8
SNN_NVVDD_GL1_PH8
SNN_NVVDD_GL2_PH8
L19 0.22uH
TH NO STUFF
L18 0.22uH
TH COMMON
PCB CO-LAYOUT
NVVDD
C207
10uF
10V
10%
X5R
0805
NO STUFF
R184
0ohm
0.05 ohm
0402
COMMON
R185
0ohm
0.05 ohm
0402
COMMON
PS_NVVDD_CSN8
PS_NVVDD_PH8
OUT
C150
820uF
COMMON
20%
2.5V@105degC
AL-Polymer
5A@105degC,100KHz
0.007ohm
TH_D63P25
C157 47uF
C188 47uF
C172 47uF
C206 47uF
C181 47uF
C142 47uF
C126 47uF
4V
20%
X6S
0805
NO STUFF
C1086 47uF
C123 47uF
C1157 47uF
GND

ASSEMBLY	<ASSEMBLY_DESCRIPTION>
PAGE DETAIL	PS: NVVDD PH10, PH8

ALL NVIDIA DESIGN SPECIFICATIONS, REFERENCE SPECIFICATIONS, REFERENCE BOARDS, FILES, DRAWINGS, DIAGNOSTICS, LISTS AND OTHER DOCUMENTS OR INFORMATION (TOGETHER AND SEPARATELY, 'MATERIALS') ARE BEING PROVIDED 'AS IS'. THE MATERIALS MAY CONTAIN KNOWN AND UNKNOWN VIOLATIONS OR DEVIATIONS OF INDUSTRY STANDARDS AND SPECIFICATIONS. NVIDIA MAKES NO WARRANTIES, EXPRESSED, IMPLIED, STATUTORY OR OTHERWISE WITH RESPECT TO THE MATERIALS OR OTHERWISE, AND EXPRESSLY DISCLAIMS ALL IMPLIED WARRANTIES INCLUDING, WITHOUT LIMITATION, THE WARRANTIES OF DESIGN, OF NONINFRINGEMENT, MERCHANTABILITY OR FITNESS FOR A PARTICULAR PURPOSE, OR ARISING FROM A COURSE OF DEALING, TRADE USAGE, TRADE PRACTICE, OR INDUSTRY STANDARDS.

RD Center
Colorful Co.,Ltd
深圳市七彩虹科技发展有限公司

Size	Document Number	Rev
Custom	GA104H8-E10	A

Page42: Input Power Balancing Switcher

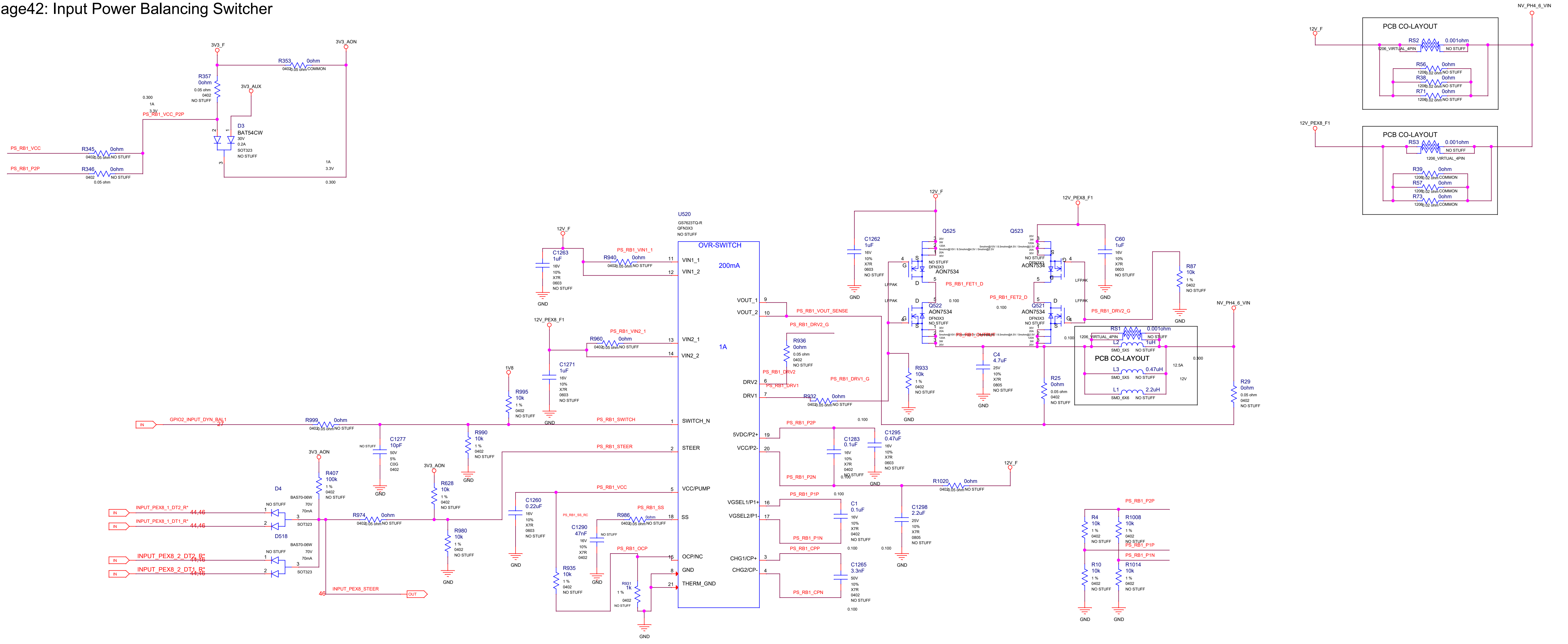

3V3_F
3V3_AON
R353 0ohm 0402 0.05 ohm COMMON
R357 0ohm 0.05 ohm 0402 NO STUFF
3V3_AUX
PS_RB1_VCC_P2P
D3 BAT54CW 30V 0.2A SOT323 NO STUFF
PS_RB1_VCC
PS_RB1_P2P
R345 0ohm 0402 0.05 ohm NO STUFF
R346 0ohm 0402 NO STUFF 0.05 ohm
U520 GS7623TQ-R QFN3X3 NO STUFF
OVR-SWITCH
200mA
1A
VIN1_1
VIN1_2
VIN2_1
VIN2_2
VOUT_1
VOUT_2
DRV2
DRV1
SWITCH_N
STEER
VCC/PUMP
SS
OCP/NC
GND
THERM_GND
5VDC/P2+
VCC/P2-
VGSEL1/P1+
VGSEL2/P1-
CHG1/CP+
CHG2/CP-
12V_F
12V_PEX8_F1
1V8
C1263 1uF 16V 10% X7R 0603 NO STUFF
R940 0ohm 0402 0.05 ohm NO STUFF
PS_RB1_VIN1_1
PS_RB1_VIN2_1
R960 0ohm 0402 0.05 ohm NO STUFF
C1271 1uF 16V 10% X7R 0603 NO STUFF
R995 10k 1% 0402 NO STUFF
GPIO2_INPUT_DYN_BAL1
R999 0ohm 0402 0.05 ohm NO STUFF
PS_RB1_SWITCH
R990 10k 1% 0402 NO STUFF
C1277 10pF 50V 5% C0G 0402 NO STUFF
PS_RB1_STEER
R407 100k 1% 0402 NO STUFF
R628 10k 1% 0402 NO STUFF
PS_RB1_VCC
C1260 0.22uF 16V 10% X7R 0603 NO STUFF
PS_RB1_SS_RC
C1290 47nF 16V 10% X7R 0402 NO STUFF
R986 0ohm 0402 0.05 ohm NO STUFF
PS_RB1_SS
PS_RB1_OCP
R931 1k 1% 0402 NO STUFF
R935 10k 1% 0402 NO STUFF
D4 BAS70-06W 70V 70mA SOT323 NO STUFF
D518 BAS70-06W 70V 70mA SOT323 NO STUFF
INPUT_PEX8_1_DT2_R*
INPUT_PEX8_1_DT1_R*
INPUT_PEX8_2_DT2_R*
INPUT_PEX8_2_DT1_R*
R974 0ohm 0402 0.05 ohm NO STUFF
R980 10k 1% 0402 NO STUFF
INPUT_PEX8_STEER
PS_RB1_VOUT_SENSE
PS_RB1_DRV2_G
R936 0ohm 0.05 ohm 0402 NO STUFF
PS_RB1_DRV2
PS_RB1_DRV1
PS_RB1_DRV1_G
R932 0ohm 0402 0.05 ohm NO STUFF
PS_RB1_P2P
C1283 0.1uF 16V 10% X7R 0402 NO STUFF
C1295 0.47uF 16V 10% X7R 0603 NO STUFF
PS_RB1_P2N
R1020 0ohm 0402 0.05 ohm NO STUFF
PS_RB1_P1P
C1 0.1uF 16V 10% X7R 0402 NO STUFF
PS_RB1_P1N
C1298 2.2uF 25V 10% X7R 0805 NO STUFF
PS_RB1_CPP
C1265 3.3nF 50V 10% X7R 0402 NO STUFF
PS_RB1_CPN
C1262 1uF 16V 10% X7R 0603 NO STUFF
Q525 AON7534 DFN3X3 NO STUFF
Q523 AON7534 DFN3X3 NO STUFF
Q522 AON7534 DFN3X3 NO STUFF
Q521 AON7534 DFN3X3 NO STUFF
PS_RB1_FET1_D
PS_RB1_FET2_D
LFPAK
C60 1uF 16V 10% X7R 0603 NO STUFF
R87 10k 1% 0402 NO STUFF
PS_RB1_DRV2_G
R933 10k 1% 0402 NO STUFF
C4 4.7uF 25V 10% X7R 0805 NO STUFF
R25 0ohm 0.05 ohm 0402 NO STUFF
NV_PH4_6_VIN
RS1 0.001ohm 1206_VIRTUAL_4PIN NO STUFF
L2 1uH SMD_5X5 NO STUFF
PCB CO-LAYOUT
L3 0.47uH SMD_5X5 NO STUFF
L1 2.2uH SMD_6X6 NO STUFF
12.5A
12V
R29 0ohm 0.05 ohm 0402 NO STUFF
PS_RB1_P2P
R4 10k 1% 0402 NO STUFF
R1008 10k 1% 0402 NO STUFF
PS_RB1_P1P
PS_RB1_P1N
R10 10k 1% 0402 NO STUFF
R1014 10k 1% 0402 NO STUFF
RS2 0.001ohm 1206_VIRTUAL_4PIN NO STUFF
R56 0ohm 1206 0.02 ohm NO STUFF
R38 0ohm 1206 0.02 ohm NO STUFF
R71 0ohm 1206 0.02 ohm NO STUFF
RS3 0.001ohm 1206_VIRTUAL_4PIN NO STUFF
R39 0ohm 1206 0.02 ohm COMMON
R57 0ohm 1206 0.02 ohm COMMON
R73 0ohm 1206 0.02 ohm COMMON
GND
IN
OUT

ASSEMBLY <ASSEMBLY_DESCRIPTION>

PAGE DETAIL PS: OVRS_INPUT POWER BALANCE

ALL NVIDIA DESIGN SPECIFICATIONS, REFERENCE SPECIFICATIONS, REFERENCE BOARDS, FILES, DRAWINGS, DIAGNOSTICS, LISTS AND OTHER DOCUMENTS OR INFORMATION (TOGETHER AND SEPARATELY, 'MATERIALS') ARE BEING PROVIDED 'AS IS'. THE MATERIALS MAY CONTAIN KNOWN AND UNKNOWN VIOLATIONS OR DEVIATIONS OF INDUSTRY STANDARDS AND SPECIFICATIONS. NVIDIA MAKES NO WARRANTIES, EXPRESSED, IMPLIED, STATUTORY OR OTHERWISE WITH RESPECT TO THE MATERIALS OR OTHERWISE, AND EXPRESSLY DISCLAIMS ALL IMPLIED WARRANTIES INCLUDING, WITHOUT LIMITATION, THE WARRANTIES OF DESIGN, OF NONINFRINGEMENT, MERCHANTABILITY OR FITNESS FOR A PARTICULAR PURPOSE, OR ARISING FROM A COURSE OF DEALING, TRADE USAGE, TRADE PRACTICE, OR INDUSTRY STANDARDS.

七彩虹

RD Center
Colorful Co.,Ltd
深圳市七彩虹科技发展有限公司

Size	Document Number	Rev
Custom	GA104H8-E10	A

Date: Monday, July 13, 2020 Sheet 42 of 57

Page43: INPUT SWITCH RTD3 (12V & 3V3_A SWITCHER)

AND GATE LOGIC

GPIO1	GPIO29	SWITCH	VOUT
0	0	0	12V
0	1	0	12V
1	0	0	12V
1	1	1	3V3A

SWITCH	VOUT
0	VOUT = VIN1
1	VOUT = VIN2

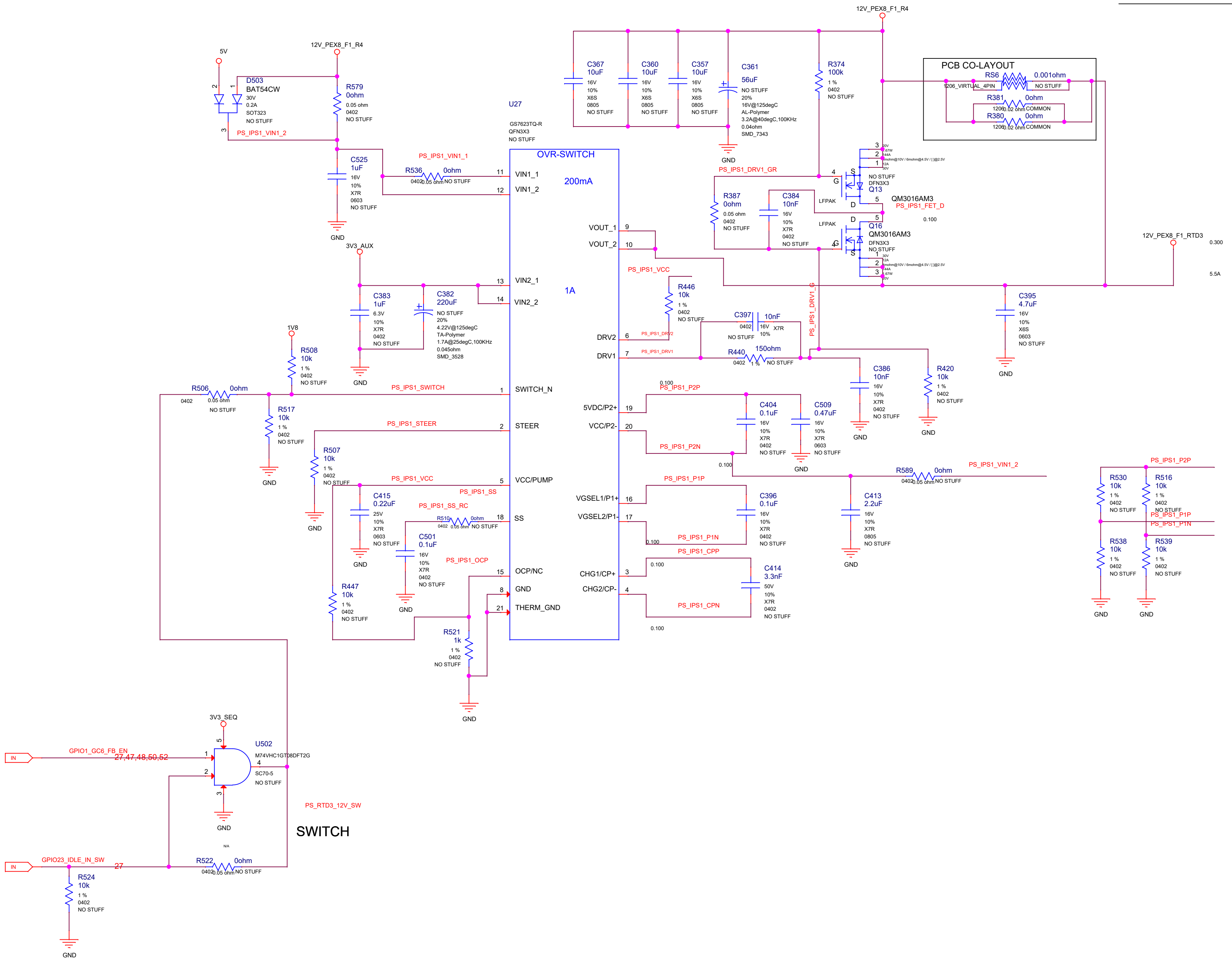
5V
12V_PEX8_F1_R4
D503
BAT54CW
30V
0.2A
SOT323
NO STUFF
PS_IPS1_VIN1_2
R579
0ohm
0.05 ohm
0402
NO STUFF
C525
1uF
16V
10%
X7R
0603
NO STUFF
GND
U27
GS7623TQ-R
QFN3X3
NO STUFF
OVR-SWITCH
200mA
1A
PS_IPS1_VIN1_1
R536
0ohm
0402
0.05 ohm
NO STUFF
VIN1_1
VIN1_2
VIN2_1
VIN2_2
VOUT_1
VOUT_2
DRV2
DRV1
SWITCH_N
STEER
VCC/PUMP
SS
OCP/NC
GND
THERM_GND
5VDC/P2+
VCC/P2-
VGSEL1/P1+
VGSEL2/P1-
CHG1/CP+
CHG2/CP-
3V3_AUX
C383
1uF
6.3V
10%
X7R
0402
NO STUFF
C382
220uF
NO STUFF
20%
4.22V@125degC
TA-Polymer
1.7A@25degC,100KHz
0.045ohm
SMD_3528
1V8
R508
10k
1 %
0402
NO STUFF
R506
0ohm
PS_IPS1_SWITCH
R517
10k
PS_IPS1_STEER
R507
10k
PS_IPS1_VCC
C415
0.22uF
25V
PS_IPS1_SS
PS_IPS1_SS_RC
R510
C501
0.1uF
PS_IPS1_OCP
R447
10k
R521
1k
C367
10uF
C360
10uF
C357
10uF
X6S
0805
C361
56uF
16V@125degC
AL-Polymer
3.2A@40degC,100KHz
0.04ohm
SMD_7343
R374
100k
PCB CO-LAYOUT
RS6
0.001ohm
1206_VIRTUAL_4PIN
R381
R380
1206
0.02 ohm
COMMON
PS_IPS1_DRV1_GR
R387
0ohm
C384
10nF
LFPAK
Q13
Q16
QM3016AM3
DFN3X3
S
G
D
20V
1.67W
144A
4mohm@10V / 6mohm@4.5V / [ ]@2.5V
12A
30V
PS_IPS1_FET_D
0.100
12V_PEX8_F1_RTD3
0.300
5.5A
C395
4.7uF
0603
R446
10k
PS_IPS1_DRV2
PS_IPS1_DRV1
C397
10nF
R440
150ohm
PS_IPS1_DRV1_G
C386
10nF
R420
10k
PS_IPS1_P2P
PS_IPS1_P2N
C404
0.1uF
C509
0.47uF
R589
0ohm
PS_IPS1_P1P
PS_IPS1_P1N
C396
0.1uF
C413
2.2uF
PS_IPS1_CPP
PS_IPS1_CPN
C414
3.3nF
50V
R530
10k
R516
10k
R538
10k
R539
10k
3V3_SEQ
U502
M74VHC1GT08DFT2G
SC70-5
NO STUFF
IN
GPIO1_GC6_FB_EN
27,47,48,50,52
GPIO23_IDLE_IN_SW
27
N/A
R522
0ohm
R524
10k
PS_RTD3_12V_SW
SWITCH

ASSEMBLY <ASSEMBLY_DESCRIPTION>
PAGE DETAIL PS: RDT3_12V & 3V3_A Switcher

ALL NVIDIA DESIGN SPECIFICATIONS, REFERENCE SPECIFICATIONS, REFERENCE BOARDS, FILES, DRAWINGS, DIAGNOSTICS, LISTS AND OTHER DOCUMENTS OR INFORMATION (TOGETHER AND SEPARATELY, 'MATERIALS') ARE BEING PROVIDED 'AS IS'. THE MATERIALS MAY CONTAIN KNOWN AND UNKNOWN VIOLATIONS OR DEVIATIONS OF INDUSTRY STANDARDS AND SPECIFICATIONS. NVIDIA MAKES NO WARRANTIES, EXPRESSED, IMPLIED, STATUTORY OR OTHERWISE WITH RESPECT TO THE MATERIALS OR OTHERWISE, AND EXPRESSLY DISCLAIMS ALL IMPLIED WARRANTIES INCLUDING, WITHOUT LIMITATION, THE WARRANTIES OF DESIGN, OF NONINFRINGEMENT, MERCHANTABILITY OR FITNESS FOR A PARTICULAR PURPOSE, OR ARISING FROM A COURSE OF DEALING, TRADE USAGE, TRADE PRACTICE, OR INDUSTRY STANDARDS.

RD Center
Colorful Co.,Ltd
深圳市七彩虹科技发展有限公司

Size	Document Number	Rev
Custom	GA104H8-E10	A

Page44: 12V_EXT_INPUT, FILTERING & UNDER POWER BOOT

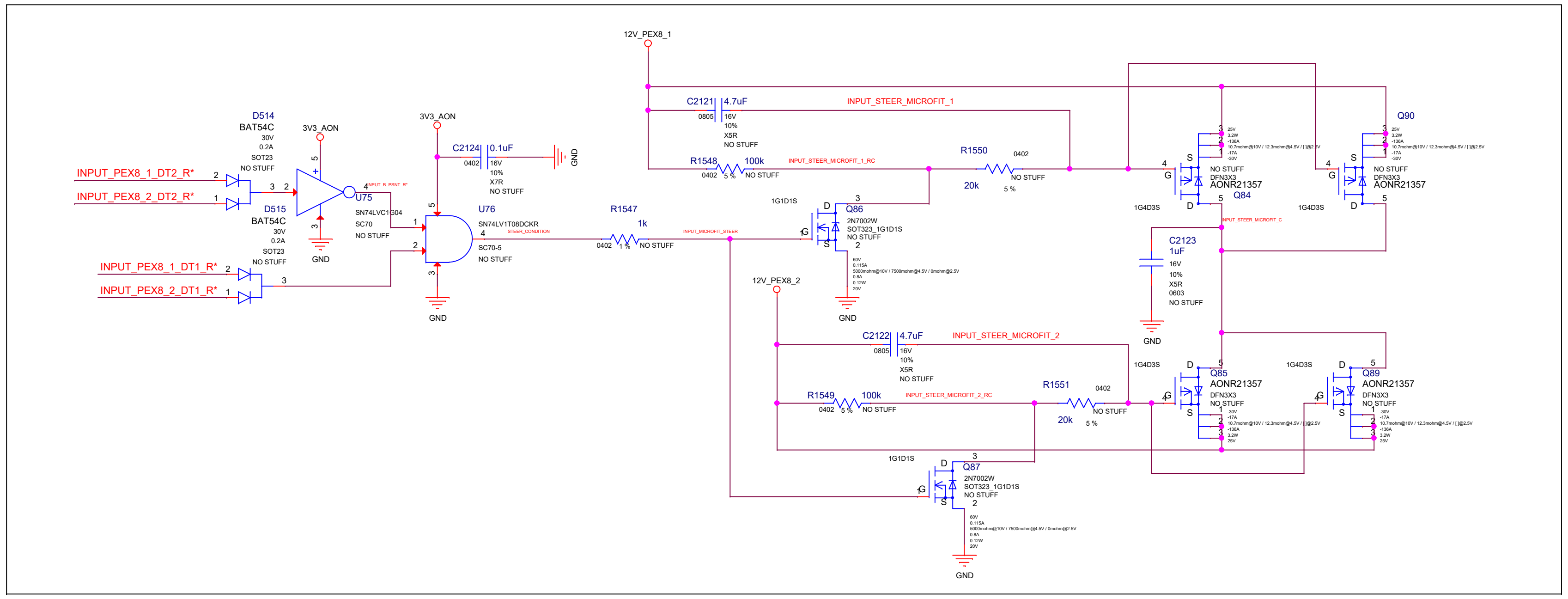
12V_PEX8_1
C2121 4.7uF
INPUT_STEER_MICROFIT_1
R1548 100k
R1550 20k
D514 BAT54C
3V3_AON
U75
D515 BAT54C
INPUT_PEX8_1_DT2_R*
INPUT_PEX8_2_DT2_R*
INPUT_PEX8_1_DT1_R*
INPUT_PEX8_2_DT1_R*
C2124 0.1uF
U76 SN74LV1T08DCKR
R1547 1k
Q86 2N7002W
Q84 AONR21357
Q90 AONR21357
C2123 1uF
12V_PEX8_2
C2122 4.7uF
INPUT_STEER_MICROFIT_2
R1549 100k
R1551 20k
Q85 AONR21357
Q89 AONR21357
Q87 2N7002W
GND

PEX Input - Under Power Boot Control

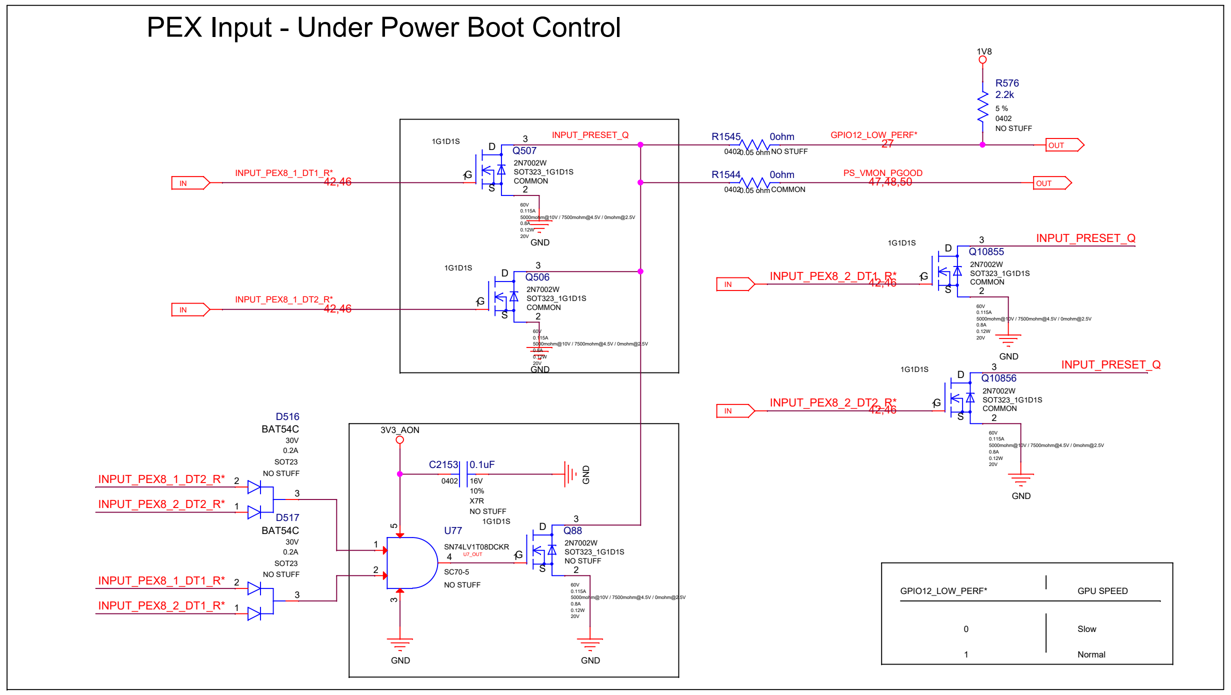
1V8
R576 2.2k
Q507 2N7002W
INPUT_PRESET_Q
R1545 0ohm
GPIO12_LOW_PERF*
R1544 0ohm
PS_VMON_PGOOD
INPUT_PEX8_1_DT1_R*
INPUT_PEX8_1_DT2_R*
Q506 2N7002W
Q10855 2N7002W
INPUT_PEX8_2_DT1_R*
Q10856 2N7002W
INPUT_PEX8_2_DT2_R*
D516 BAT54C
D517 BAT54C
3V3_AON
C2153 0.1uF
U77 SN74LV1T08DCKR
Q88 2N7002W
GND

GPIO12_LOW_PERF*	GPU SPEED
0	Slow
1	Normal

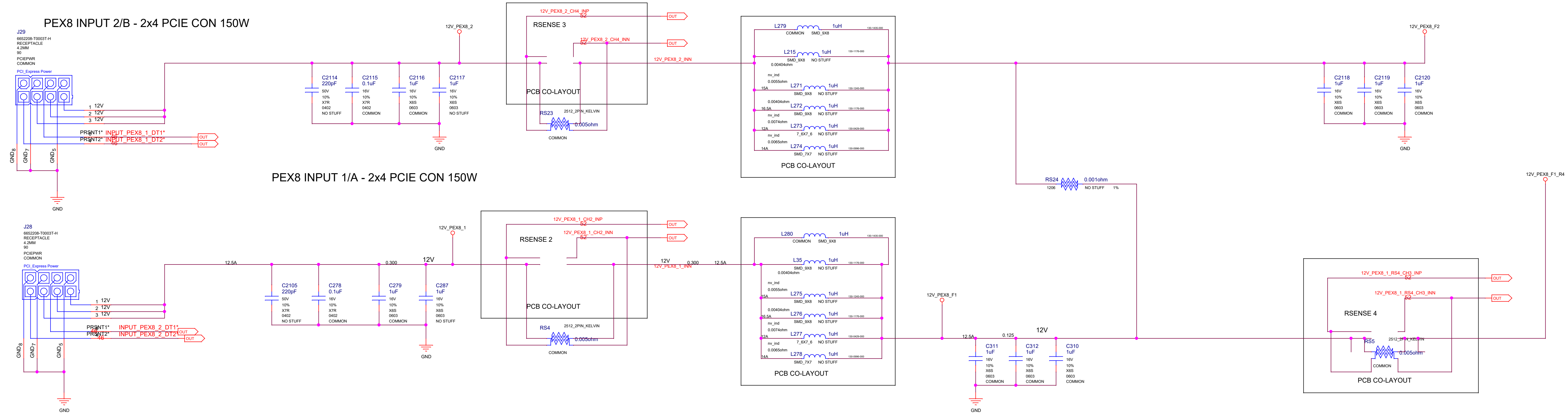
PEX8 INPUT 2/B - 2x4 PCIE CON 150W
J29
PCI_Express Power
PRSNT1*
PRSNT2*
INPUT_PEX8_1_DT1*
INPUT_PEX8_1_DT2*
12V_PEX8_2
C2114 220pF
C2115 0.1uF
C2116 1uF
C2117 1uF
RSENSE 3
12V_PEX8_2_CH4_INP
12V_PEX8_2_CH4_INN
12V_PEX8_2_INN
PCB CO-LAYOUT
RS23 0.005ohm
L279 1uH
L215 1uH
L271 1uH
L272 1uH
L273 1uH
L274 1uH
12V_PEX8_F2
C2118 1uF
C2119 1uF
C2120 1uF
PEX8 INPUT 1/A - 2x4 PCIE CON 150W
RS24 0.001ohm
12V_PEX8_F1_R4
J28
INPUT_PEX8_2_DT1*
INPUT_PEX8_2_DT2*
12V_PEX8_1
C2105 220pF
C278 0.1uF
C279 1uF
C287 1uF
RSENSE 2
12V_PEX8_1_CH2_INP
12V_PEX8_1_CH2_INN
12V_PEX8_1_INN
RS4 0.005ohm
L280 1uH
L35 1uH
L275 1uH
L276 1uH
L277 1uH
L278 1uH
12V_PEX8_F1
C311 1uF
C312 1uF
C310 1uF
RSENSE 4
12V_PEX8_1_RS4_CH3_INP
12V_PEX8_1_RS4_CH3_INN
RS5 0.005ohm
12V
GND

$CDS_IMAGE|clipboard_0_2.jpg|3896|1097

ASSEMBLY <ASSEMBLY_DESCRIPTION>
PAGE DETAIL PS: INPUTS, FILTERING and MONITORING

ALL NVIDIA DESIGN SPECIFICATIONS, REFERENCE SPECIFICATIONS, REFERENCE BOARDS, FILES, DRAWINGS, DIAGNOSTICS, LISTS AND OTHER DOCUMENTS OR INFORMATION (TOGETHER AND SEPARATELY, 'MATERIALS') ARE BEING PROVIDED 'AS IS'. THE MATERIALS MAY CONTAIN KNOWN AND UNKNOWN VIOLATIONS OR DEVIATIONS OF INDUSTRY STANDARDS AND SPECIFICATIONS. NVIDIA MAKES NO WARRANTIES, EXPRESSED, IMPLIED, STATUTORY OR OTHERWISE WITH RESPECT TO THE MATERIALS OR OTHERWISE, AND EXPRESSLY DISCLAIMS ALL IMPLIED WARRANTIES INCLUDING, WITHOUT LIMITATION, THE WARRANTIES OF DESIGN, OF NONINFRINGEMENT, MERCHANTABILITY OR FITNESS FOR A PARTICULAR PURPOSE, OR ARISING FROM A COURSE OF DEALING, TRADE USAGE, TRADE PRACTICE, OR INDUSTRY STANDARDS.

Page45: PEX_INPUT & FILTERING, PEX_3V3, 3V3_AUX

PEX_12V INPUT - 66W

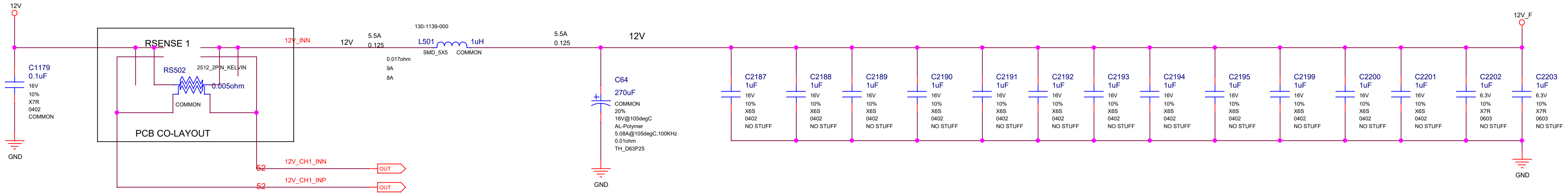
12V
RSENSE 1
RS502
2512_2PIN_KELVIN
0.005ohm
COMMON
PCB CO-LAYOUT
C1179
0.1uF
16V
10%
X7R
0402
COMMON
GND
12V_INN
12V
5.5A
0.125
0.017ohm
9A
8A
130-1139-000
L501
1uH
SMD_5X5
COMMON
5.5A
0.125
12V
C64
270uF
COMMON
20%
16V@105degC
AL-Polymer
5.08A@105degC,100KHz
0.01ohm
TH_D63P25
GND
52
12V_CH1_INN
OUT
52
12V_CH1_INP
OUT
C2187 1uF 16V 10% X6S 0402 NO STUFF
C2188 1uF 16V 10% X6S 0402 NO STUFF
C2189 1uF 16V 10% X6S 0402 NO STUFF
C2190 1uF 16V 10% X6S 0402 NO STUFF
C2191 1uF 16V 10% X6S 0402 NO STUFF
C2192 1uF 16V 10% X6S 0402 NO STUFF
C2193 1uF 16V 10% X6S 0402 NO STUFF
C2194 1uF 16V 10% X6S 0402 NO STUFF
C2195 1uF 16V 10% X6S 0402 NO STUFF
C2199 1uF 16V 10% X6S 0402 NO STUFF
C2200 1uF 16V 10% X6S 0402 NO STUFF
C2201 1uF 16V 10% X6S 0402 NO STUFF
C2202 1uF 6.3V 10% X7R 0603 NO STUFF
C2203 1uF 6.3V 10% X7R 0603 NO STUFF
12V_F
GND

PEX 3V3 INPUT - 10W

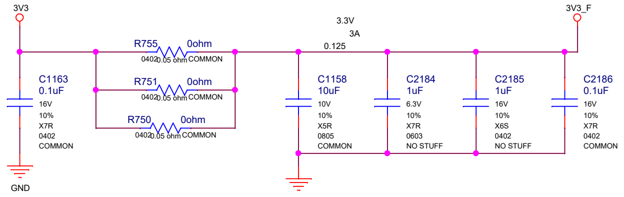
3V3
C1163
0.1uF
16V
10%
X7R
0402
COMMON
GND
R755 0ohm 0402 0.05 ohm COMMON
R751 0ohm 0402 0.05 ohm COMMON
R750 0ohm 0402 0.05 ohm COMMON
3.3V
3A
0.125
C1158 10uF 10V 10% X5R 0805 COMMON
C2184 1uF 6.3V 10% X7R 0603 NO STUFF
C2185 1uF 16V 10% X6S 0402 NO STUFF
C2186 0.1uF 16V 10% X7R 0402 COMMON
3V3_F
GND

Supply for 3V3_PROT and OVRM

3V3_AUX

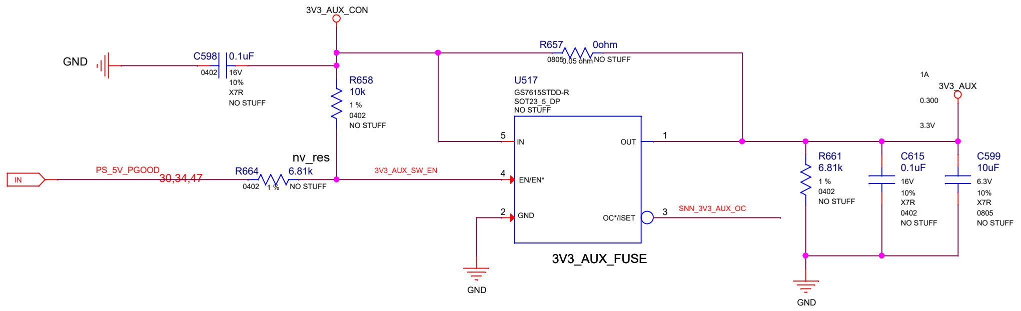
3V3_AUX_CON
GND
C598 0.1uF 0402 16V 10% X7R NO STUFF
R658 10k 1 % 0402 NO STUFF
R657 0ohm 0805 0.05 ohm NO STUFF
U517
GS7615STDD-R
SOT23_5_DP
NO STUFF
5 IN
OUT 1
4 EN/EN*
2 GND
OC*/ISET 3
SNN_3V3_AUX_OC
IN
PS_5V_PGOOD
30,34,47
R664 6.81k 0402 1 % NO STUFF
nv_res
3V3_AUX_SW_EN
GND
1A
3V3_AUX
0.300
3.3V
R661 6.81k 1 % 0402 NO STUFF
C615 0.1uF 16V 10% X7R 0402 NO STUFF
C599 10uF 6.3V 10% X7R 0805 NO STUFF
GND

3V3_AUX_FUSE

ASSEMBLY	<ASSEMBLY_DESCRIPTION>
PAGE DETAIL	PS: PEX_12V, PEX_3V3 AND A3V3_AUX

ALL NVIDIA DESIGN SPECIFICATIONS, REFERENCE SPECIFICATIONS, REFERENCE BOARDS, FILES, DRAWINGS, DIAGNOSTICS, LISTS AND OTHER DOCUMENTS OR INFORMATION (TOGETHER AND SEPARATELY, 'MATERIALS') ARE BEING PROVIDED 'AS IS'. THE MATERIALS MAY CONTAIN KNOWN AND UNKNOWN VIOLATIONS OR DEVIATIONS OF INDUSTRY STANDARDS AND SPECIFICATIONS. NVIDIA MAKES NO WARRANTIES, EXPRESSED, IMPLIED, STATUTORY OR OTHERWISE WITH RESPECT TO THE MATERIALS OR OTHERWISE, AND EXPRESSLY DISCLAIMS ALL IMPLIED WARRANTIES INCLUDING, WITHOUT LIMITATION, THE WARRANTIES OF DESIGN, OF NONINFRINGEMENT, MERCHANTABILITY OR FITNESS FOR A PARTICULAR PURPOSE, OR ARISING FROM A COURSE OF DEALING, TRADE USAGE, TRADE PRACTICE, OR INDUSTRY STANDARDS.

RD Center
Colorful Co.,Ltd
深圳市七彩虹科技发展有限公司

Size	Document Number	Rev
Custom	GA104H8-E10	A

Page46: STEERING, UPB, HOT UNPLUG

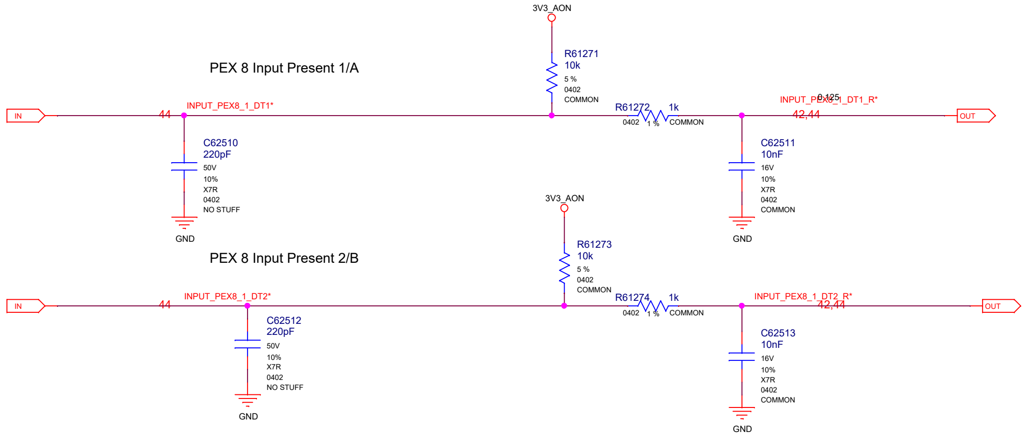
PEX 8 Input Present 1/A
3V3_AON
R61271
10k
5 %
0402
COMMON
IN
44
INPUT_PEX8_1_DT1*
R61272
1k
0402
1 %
COMMON
INPUT_PEX8_1_DT1_R*
0.125
42,44
OUT
C62510
220pF
50V
10%
X7R
0402
NO STUFF
GND
C62511
10nF
16V
10%
X7R
0402
COMMON
GND
PEX 8 Input Present 2/B
3V3_AON
R61273
10k
5 %
0402
COMMON
IN
44
INPUT_PEX8_1_DT2*
R61274
1k
0402
1 %
COMMON
INPUT_PEX8_1_DT2_R*
42,44
OUT
C62512
220pF
50V
10%
X7R
0402
NO STUFF
GND
C62513
10nF
16V
10%
X7R
0402
COMMON
GND

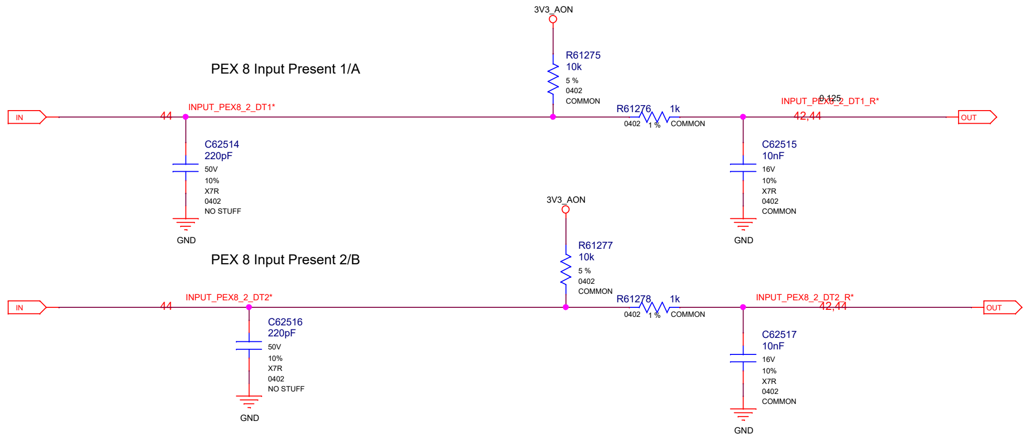
PEX 8 Input Present 1/A
3V3_AON
R61275
10k
5 %
0402
COMMON
IN
44
INPUT_PEX8_2_DT1*
R61276
1k
0402
1 %
COMMON
INPUT_PEX8_2_DT1_R*
0.125
42,44
OUT
C62514
220pF
50V
10%
X7R
0402
NO STUFF
GND
C62515
10nF
16V
10%
X7R
0402
COMMON
GND
PEX 8 Input Present 2/B
3V3_AON
R61277
10k
5 %
0402
COMMON
IN
44
INPUT_PEX8_2_DT2*
R61278
1k
0402
1 %
COMMON
INPUT_PEX8_2_DT2_R*
42,44
OUT
C62516
220pF
50V
10%
X7R
0402
NO STUFF
GND
C62517
10nF
16V
10%
X7R
0402
COMMON
GND

POWER CONNECTOR HOT-UNPLUG DETECT

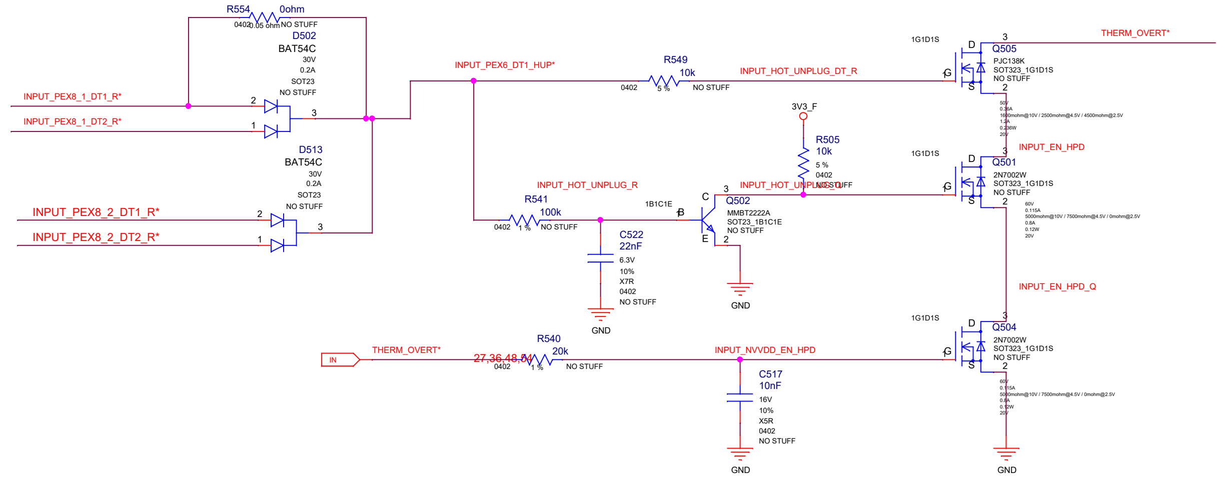
R554
0ohm
0402
0.05 ohm
NO STUFF
D502
BAT54C
30V
0.2A
SOT23
NO STUFF
INPUT_PEX8_1_DT1_R*
INPUT_PEX8_1_DT2_R*
D513
BAT54C
30V
0.2A
SOT23
NO STUFF
INPUT_PEX8_2_DT1_R*
INPUT_PEX8_2_DT2_R*
INPUT_PEX6_DT1_HUP*
R549
10k
0402
5 %
NO STUFF
INPUT_HOT_UNPLUG_DT_R
1G1D1S
Q505
PJC138K
SOT323_1G1D1S
NO STUFF
THERM_OVERT*
50V
0.36A
1600mohm@10V / 2500mohm@4.5V / 4500mohm@2.5V
1.2A
0.236W
20V
3V3_F
R505
10k
5 %
0402
NO STUFF
INPUT_HOT_UNPLUG_R
R541
100k
0402
1 %
NO STUFF
C522
22nF
6.3V
10%
X7R
0402
NO STUFF
GND
1B1C1E
Q502
MMBT2222A
SOT23_1B1C1E
NO STUFF
GND
INPUT_HOT_UNPLUG_Q
INPUT_EN_HPD
Q501
2N7002W
SOT323_1G1D1S
NO STUFF
60V
0.115A
5000mohm@10V / 7500mohm@4.5V / 0mohm@2.5V
0.8A
0.12W
20V
INPUT_EN_HPD_Q
IN
THERM_OVERT*
27,36,48,54
R540
20k
0402
1 %
NO STUFF
INPUT_NVVDD_EN_HPD
C517
10nF
16V
10%
X5R
0402
NO STUFF
GND
Q504
2N7002W
SOT323_1G1D1S
NO STUFF
GND

12V CURRENT STEERING (UNDER POWER BOOT):

GUIDES CURRENT FROM PEX EDGE TO PEX 8 PIN INPUT AREA

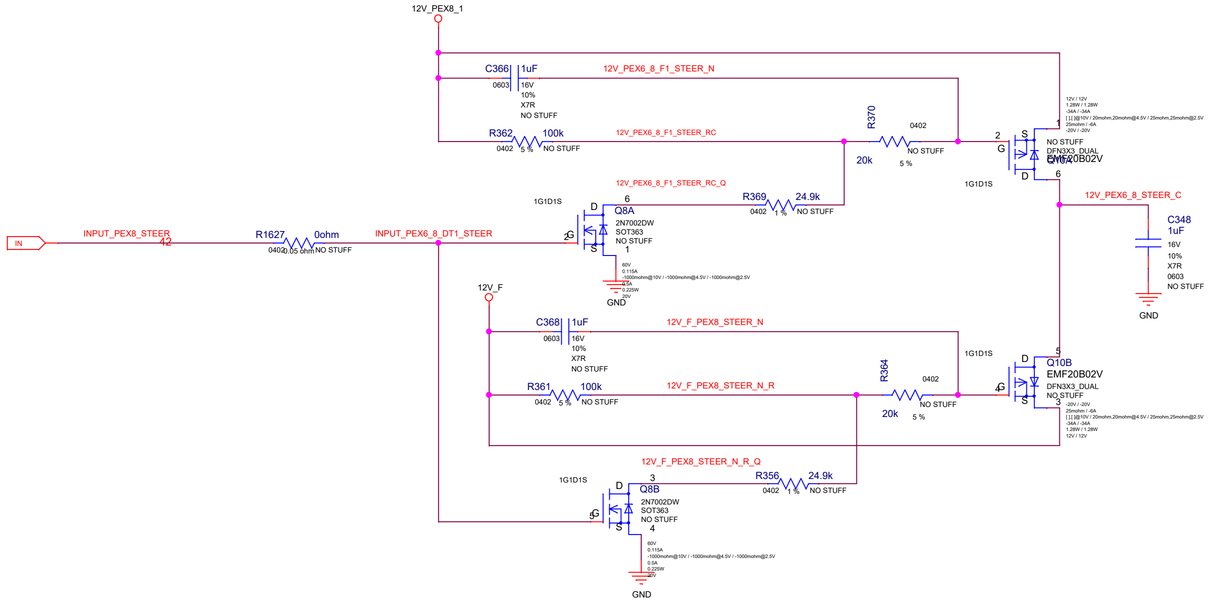
12V_PEX8_1
C366
1uF
0603
16V
10%
X7R
NO STUFF
12V_PEX6_8_F1_STEER_N
R362
100k
0402
5 %
NO STUFF
12V_PEX6_8_F1_STEER_RC
R370
20k
0402
5 %
NO STUFF
Q10A
EMF20B02V
DFN3X3_DUAL
NO STUFF
12V / 12V
1.28W / 1.28W
-34A / -34A
25mohm / -6A
-20V / -20V
12V_PEX6_8_F1_STEER_RC_Q
R369
24.9k
0402
1 %
NO STUFF
1G1D1S
Q8A
2N7002DW
SOT363
NO STUFF
60V
0.115A
-1000mohm@10V / -1000mohm@4.5V / -1000mohm@2.5V
0.5A
0.225W
20V
GND
12V_PEX6_8_STEER_C
C348
1uF
16V
10%
X7R
0603
NO STUFF
GND
IN
INPUT_PEX8_STEER
42
R1627
0ohm
0402
0.05 ohm
NO STUFF
INPUT_PEX6_8_DT1_STEER
12V_F
C368
1uF
0603
16V
10%
X7R
NO STUFF
12V_F_PEX8_STEER_N
R361
100k
0402
5 %
NO STUFF
12V_F_PEX8_STEER_N_R
R364
20k
0402
5 %
NO STUFF
Q10B
EMF20B02V
DFN3X3_DUAL
NO STUFF
12V_F_PEX8_STEER_N_R_Q
R356
24.9k
0402
1 %
NO STUFF
Q8B
2N7002DW
SOT363
NO STUFF
GND

ASSEMBLY	<ASSEMBLY_DESCRIPTION>
PAGE DETAIL	PS: STEERING, UPB, HOT UNPLUG

ALL NVIDIA DESIGN SPECIFICATIONS, REFERENCE SPECIFICATIONS, REFERENCE BOARDS, FILES, DRAWINGS, DIAGNOSTICS, LISTS AND OTHER DOCUMENTS OR INFORMATION (TOGETHER AND SEPARATELY, 'MATERIALS') ARE BEING PROVIDED 'AS IS'. THE MATERIALS MAY CONTAIN KNOWN AND UNKNOWN VIOLATIONS OR DEVIATIONS OF INDUSTRY STANDARDS AND SPECIFICATIONS. NVIDIA MAKES NO WARRANTIES, EXPRESSED, IMPLIED, STATUTORY OR OTHERWISE WITH RESPECT TO THE MATERIALS OR OTHERWISE, AND EXPRESSLY DISCLAIMS ALL IMPLIED WARRANTIES INCLUDING, WITHOUT LIMITATION, THE WARRANTIES OF DESIGN, OF NONINFRINGEMENT, MERCHANTABILITY OR FITNESS FOR A PARTICULAR PURPOSE, OR ARISING FROM A COURSE OF DEALING, TRADE USAGE, TRADE PRACTICE, OR INDUSTRY STANDARDS.

RD Center
Colorful Co.,Ltd
深圳市七彩虹科技发展有限公司

Size	Document Number	Rev
Custom	GA104H8-E10	A

Date: Tuesday, July 14, 2020 Sheet 46 of 57

Page47: SEQ: 5V, 1V8, 3V3_SEQ, DDC_5V, DP_AUX_PROT

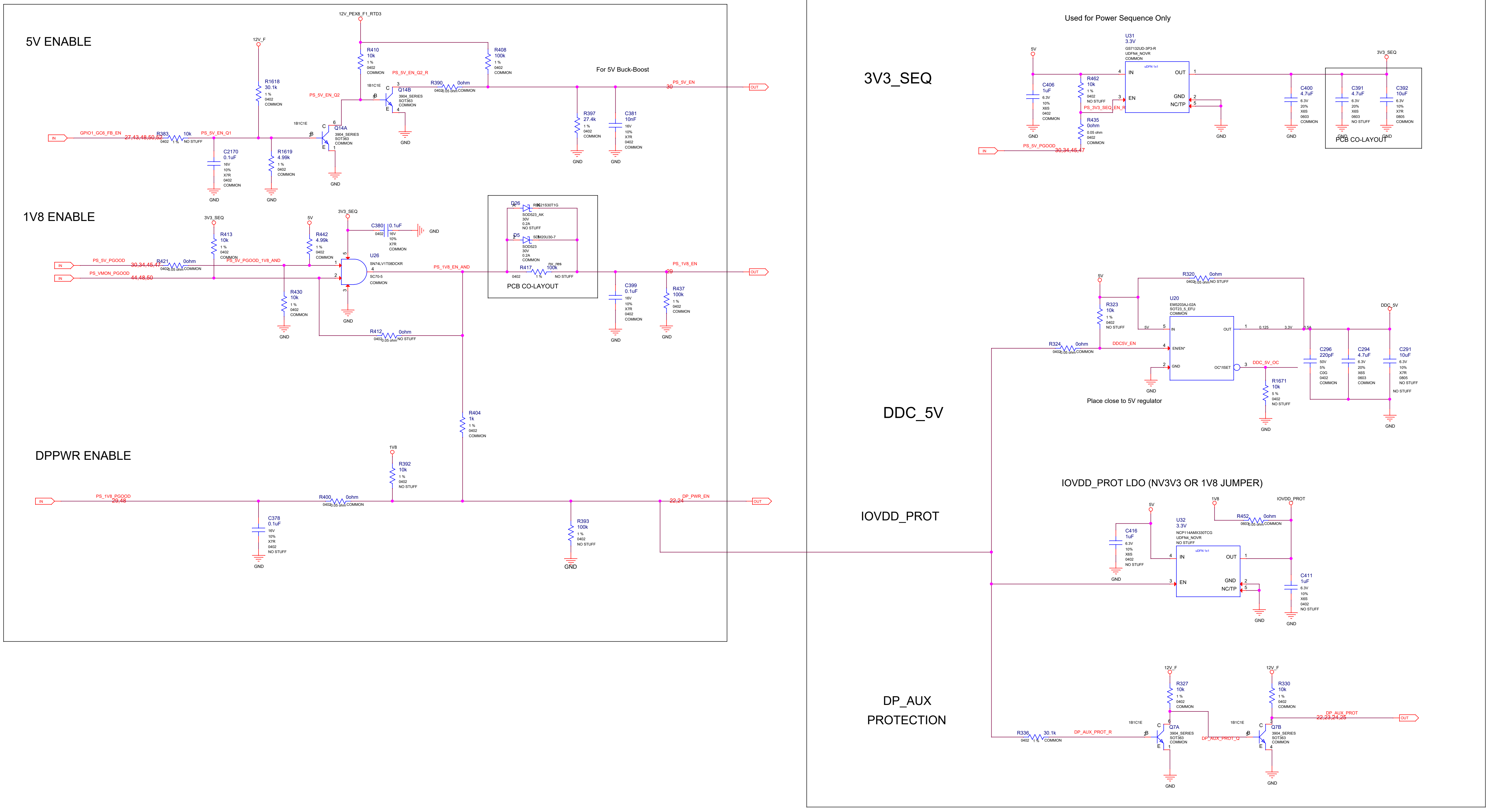
5V ENABLE
12V_PEX8_F1_RTD3
12V_F
R1618 30.1k
R410 10k
R408 100k
PS_5V_EN_Q2_R
R390 0ohm
Q14B 3904_SERIES SOT363
PS_5V_EN_Q2
Q14A 3904_SERIES SOT363
GPIO1_GC6_FB_EN
27,43,48,50,52
R383 10k NO STUFF
PS_5V_EN_Q1
C2170 0.1uF
R1619 4.99k
For 5V Buck-Boost
R397 27.4k
C381 10nF
PS_5V_EN
30
1V8 ENABLE
3V3_SEQ
R413 10k
5V
R442 4.99k
C380 0.1uF
U26 SN74LV1T08DCKR SC70-5
PS_5V_PGOOD
30,34,45,47
R421 0ohm
PS_5V_PGOOD_1V8_AND
PS_VMON_PGOOD
44,48,50
R430 10k
PS_1V8_EN_AND
R412 0ohm NO STUFF
D26 RB521S30T1G SOD523_AK 30V 0.2A NO STUFF
D5 SDM20U30-7 SOD523 30V 0.2A
R417 100k NO STUFF
PCB CO-LAYOUT
C399 0.1uF
R437 100k
PS_1V8_EN
29
R404 1k
DPPWR ENABLE
1V8
R392 10k NO STUFF
PS_1V8_PGOOD
29,48
R400 0ohm
C378 0.1uF NO STUFF
R393 100k NO STUFF
DP_PWR_EN
22,24
3V3_SEQ
Used for Power Sequence Only
U31 3.3V GS7132UD-3P3-R UDFN4_NOVR
R462 10k NO STUFF
R435 0ohm
PS_3V3_SEQ_EN_R
C406 1uF
C400 4.7uF
C391 4.7uF NO STUFF
C392 10uF
PCB CO-LAYOUT
DDC_5V
R320 0ohm NO STUFF
R323 10k NO STUFF
U20 EMS203AJ-02A SOT23_5_EFU
R324 0ohm
DDC5V_EN
DDC_5V_OC
R1671 10k NO STUFF
C296 220pF
C294 4.7uF
C291 10uF NO STUFF
Place close to 5V regulator
IOVDD_PROT
IOVDD_PROT LDO (NV3V3 OR 1V8 JUMPER)
U32 3.3V NCP114AMX330TCG UDFN4_NOVR NO STUFF
C416 1uF NO STUFF
R452 0ohm
C411 1uF NO STUFF
DP_AUX PROTECTION
R336 30.1k
DP_AUX_PROT_R
R327 10k
Q7A 3904_SERIES SOT363
DP_AUX_PROT_Q
R330 10k
Q7B 3904_SERIES SOT363
DP_AUX_PROT
22,23,24,26
GND

ASSEMBLY <ASSEMBLY_DESCRIPTION>
PAGE DETAIL SEQ: 5V, 1V8, 3V3_SEQ

ALL NVIDIA DESIGN SPECIFICATIONS, REFERENCE SPECIFICATIONS, REFERENCE BOARDS, FILES, DRAWINGS, DIAGNOSTICS, LISTS AND OTHER DOCUMENTS OR INFORMATION (TOGETHER AND SEPARATELY, 'MATERIALS') ARE BEING PROVIDED 'AS IS'. THE MATERIALS MAY CONTAIN KNOWN AND UNKNOWN VIOLATIONS OR DEVIATIONS OF INDUSTRY STANDARDS AND SPECIFICATIONS. NVIDIA MAKES NO WARRANTIES, EXPRESSED, IMPLIED, STATUTORY OR OTHERWISE WITH RESPECT TO THE MATERIALS OR OTHERWISE AND EXPRESSLY DISCLAIMS ALL IMPLIED WARRANTIES INCLUDING, WITHOUT LIMITATION, THE WARRANTIES OF DESIGN, OF NONINFRINGEMENT, MERCHANTABILITY OR FITNESS FOR A PARTICULAR PURPOSE, OR ARISING FROM A COURSE OF DEALING, TRADE USAGE, TRADE PRACTICE, OR INDUSTRY STANDARDS.

RD Center
Colorful Co.,Ltd
深圳市七彩虹科技发展有限公司

Size	Document Number	Rev
Custom	GA104H8-E10	A

Date: Monday, July 13, 2020 Sheet 47 of 57

Page48: SEQ:NVVDD, PEX, FBVDDQ ENABLE

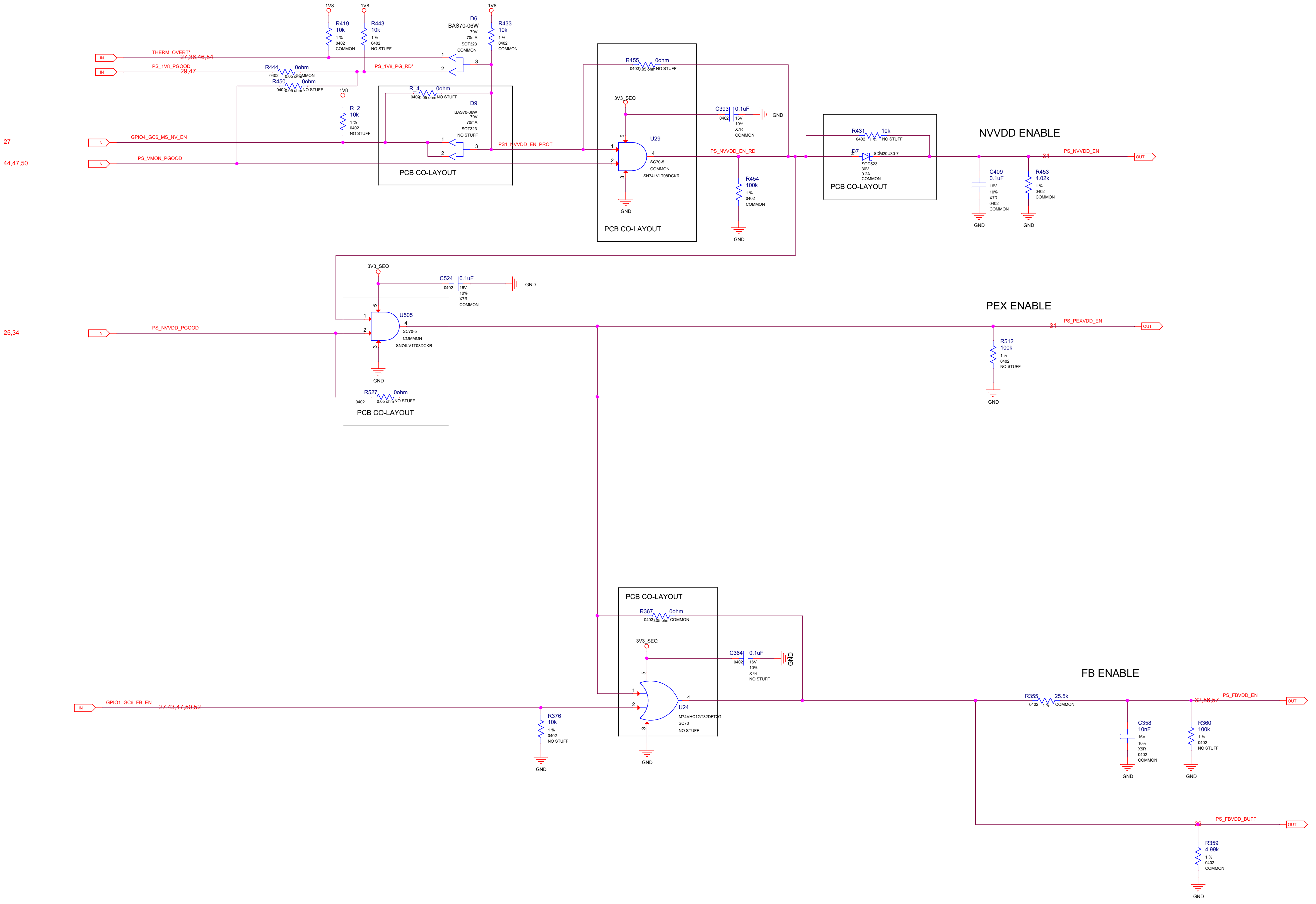
1V8
R419
10k
1 %
0402
COMMON
R443
10k
0402
NO STUFF
D6
BAS70-06W
70V
70mA
SOT323
COMMON
R433
10k
THERM_OVERT*
27,36,46,54
PS_1V8_PGOOD
29,47
PS_1V8_PG_RD*
R444
0ohm
R450
0ohm
0.05 ohm
R_4
0ohm
D9
BAS70-06W
R_2
10k
27
GPIO4_GC6_MS_NV_EN
44,47,50
PS_VMON_PGOOD
PS1_NVVDD_EN_PROT
PCB CO-LAYOUT
R455
0ohm
3V3_SEQ
C393
0.1uF
16V
10%
X7R
GND
U29
SC70-5
SN74LV1T08DCKR
PS_NVVDD_EN_RD
R454
100k
R431
10k
D7
SOD523
30V
0.2A
NVVDD ENABLE
C409
0.1uF
R453
4.02k
34
PS_NVVDD_EN
OUT
IN
C524
0.1uF
U505
25,34
PS_NVVDD_PGOOD
R527
0ohm
PEX ENABLE
31
PS_PEXVDD_EN
R512
100k
R367
0ohm
C364
0.1uF
GPIO1_GC6_FB_EN
27,43,47,50,52
R376
10k
U24
M74VHC1GT32DFT2G
SC70
NO STUFF
FB ENABLE
R355
25.5k
C358
10nF
X5R
R360
100k
32,56,57
PS_FBVDD_EN
PS_FBVDD_BUFF
32
R359
4.99k

ASSEMBLY	<ASSEMBLY_DESCRIPTION>
PAGE DETAIL	SEQ: NVVDD, PEX, FBVDDQ ENABLE

ALL NVIDIA DESIGN SPECIFICATIONS, REFERENCE SPECIFICATIONS, REFERENCE BOARDS, FILES, DRAWINGS, DIAGNOSTICS, LISTS AND OTHER DOCUMENTS OR INFORMATION (TOGETHER AND SEPARATELY, 'MATERIALS') ARE BEING PROVIDED 'AS IS'. THE MATERIALS MAY CONTAIN KNOWN AND UNKNOWN VIOLATIONS OR DEVIATIONS OF INDUSTRY STANDARDS AND SPECIFICATIONS. NVIDIA MAKES NO WARRANTIES, EXPRESSED, IMPLIED, STATUTORY OR OTHERWISE WITH RESPECT TO THE MATERIALS OR OTHERWISE, AND EXPRESSLY DISCLAIMS ALL IMPLIED WARRANTIES INCLUDING, WITHOUT LIMITATION, THE WARRANTIES OF DESIGN, OF NONINFRINGEMENT, MERCHANTABILITY OR FITNESS FOR A PARTICULAR PURPOSE, OR ARISING FROM A COURSE OF DEALING, TRADE USAGE, TRADE PRACTICE, OR INDUSTRY STANDARDS.

RD Center
Colorful Co.,Ltd
深圳市七彩虹科技发展有限公司

Size	Document Number	Rev
Custom	GA104H8-E10	A
Date: Monday, July 13, 2020	Sheet 48 of 57	

Page49: SEQ:MISC

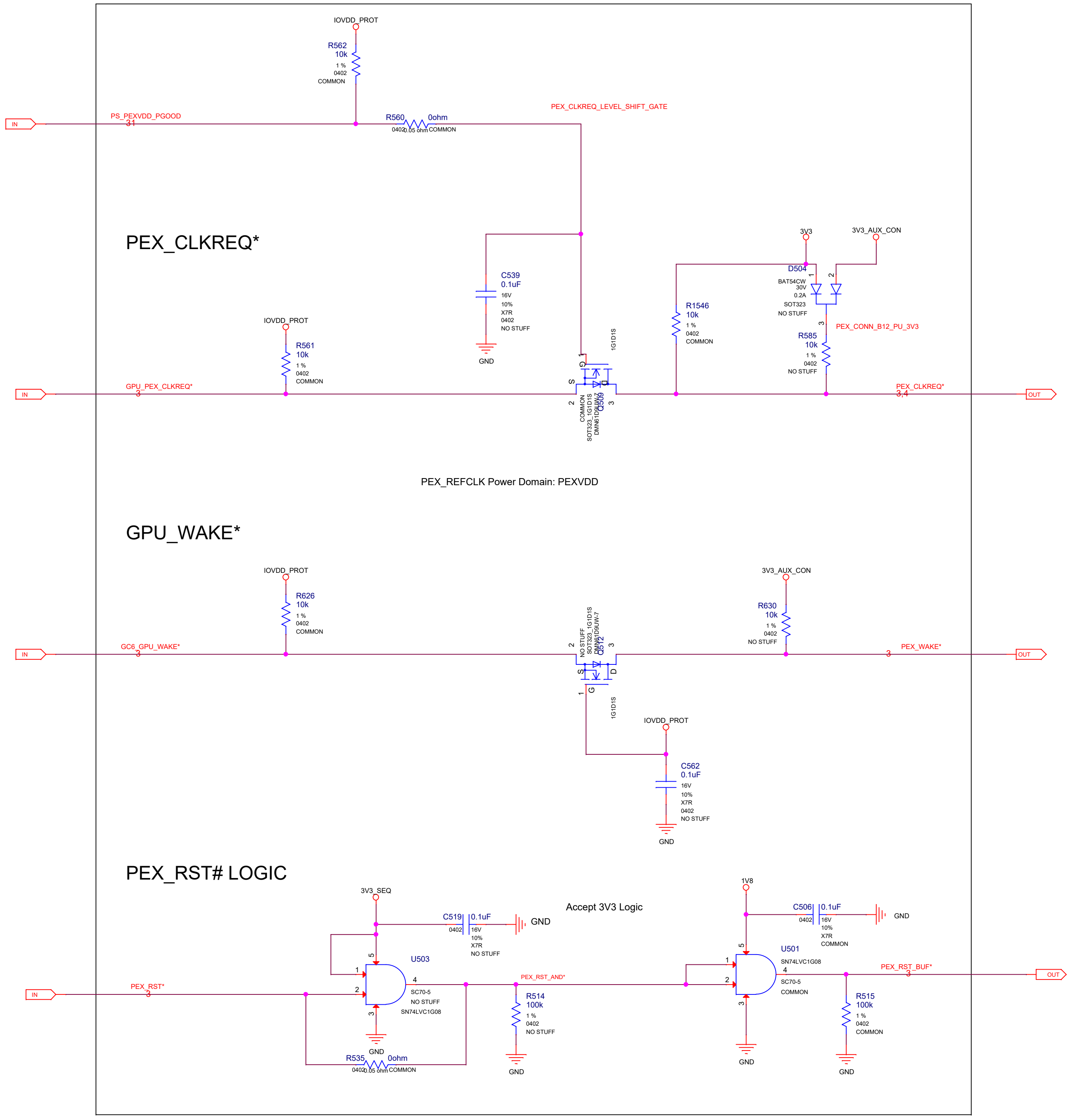
PEX_CLKREQ*
IOVDD_PROT
R562
10k
1 %
0402
COMMON
IN
PS_PEXVDD_PGOOD
31
R560
0ohm
0402
0.05 ohm
COMMON
PEX_CLKREQ_LEVEL_SHIFT_GATE
C539
0.1uF
16V
10%
X7R
0402
NO STUFF
GND
IOVDD_PROT
R561
10k
1 %
0402
COMMON
IN
GPU_PEX_CLKREQ*
3
1G1D1S
G
S
D
1
2
3
Q509
COMMON
SOT323_1G1D1S
DMN61D9UW-7
R1546
10k
1 %
0402
COMMON
3V3
3V3_AUX_CON
D504
BAT54CW
30V
0.2A
SOT323
NO STUFF
PEX_CONN_B12_PU_3V3
R585
10k
1 %
0402
NO STUFF
PEX_CLKREQ*
3,4
OUT
PEX_REFCLK Power Domain: PEXVDD
GPU_WAKE*
IOVDD_PROT
R626
10k
1 %
0402
COMMON
IN
GC6_GPU_WAKE*
3
NO STUFF
SOT323_1G1D1S
DMN61D9UW-7
Q512
S
D
G
1G1D1S
3V3_AUX_CON
R630
10k
1 %
0402
NO STUFF
PEX_WAKE*
3
OUT
IOVDD_PROT
C562
0.1uF
16V
10%
X7R
0402
NO STUFF
GND
PEX_RST# LOGIC
3V3_SEQ
C519
0.1uF
0402
16V
10%
X7R
NO STUFF
GND
Accept 3V3 Logic
U503
SC70-5
NO STUFF
SN74LVC1G08
IN
PEX_RST*
3
GND
R535
0ohm
0402
0.05 ohm
COMMON
PEX_RST_AND*
R514
100k
1 %
0402
NO STUFF
GND
1V8
C506
0.1uF
0402
16V
10%
X7R
COMMON
GND
U501
SN74LVC1G08
SC70-5
COMMON
GND
PEX_RST_BUF*
3
OUT
R515
100k
1 %
0402
COMMON
GND

ASSEMBLY <ASSEMBLY_DESCRIPTION>
PAGE DETAIL SEQ: MISC

ALL NVIDIA DESIGN SPECIFICATIONS, REFERENCE SPECIFICATIONS, REFERENCE BOARDS, FILES, DRAWINGS, DIAGNOSTICS, LISTS AND OTHER DOCUMENTS OR INFORMATION (TOGETHER AND SEPARATELY, 'MATERIALS') ARE BEING PROVIDED 'AS IS'. THE MATERIALS MAY CONTAIN KNOWN AND UNKNOWN VIOLATIONS OR DEVIATIONS OF INDUSTRY STANDARDS AND SPECIFICATIONS. NVIDIA MAKES NO WARRANTIES, EXPRESSED, IMPLIED, STATUTORY OR OTHERWISE WITH RESPECT TO THE MATERIALS OR OTHERWISE, AND EXPRESSLY DISCLAIMS ALL IMPLIED WARRANTIES INCLUDING, WITHOUT LIMITATION, THE WARRANTIES OF DESIGN, OF NONINFRINGEMENT, MERCHANTABILITY OR FITNESS FOR A PARTICULAR PURPOSE, OR ARISING FROM A COURSE OF DEALING, TRADE USAGE, TRADE PRACTICE, OR INDUSTRY STANDARDS.

RD Center
Colorful Co.,Ltd
深圳市七彩虹科技发展有限公司

Size	Document Number	Rev
Custom	GA104H8-E10	A

Date: Monday, July 13, 2020 Sheet 49 of 57

Page 50: SEQUENCE:Voltage Monitor

3V3PEX Voltage Monitor

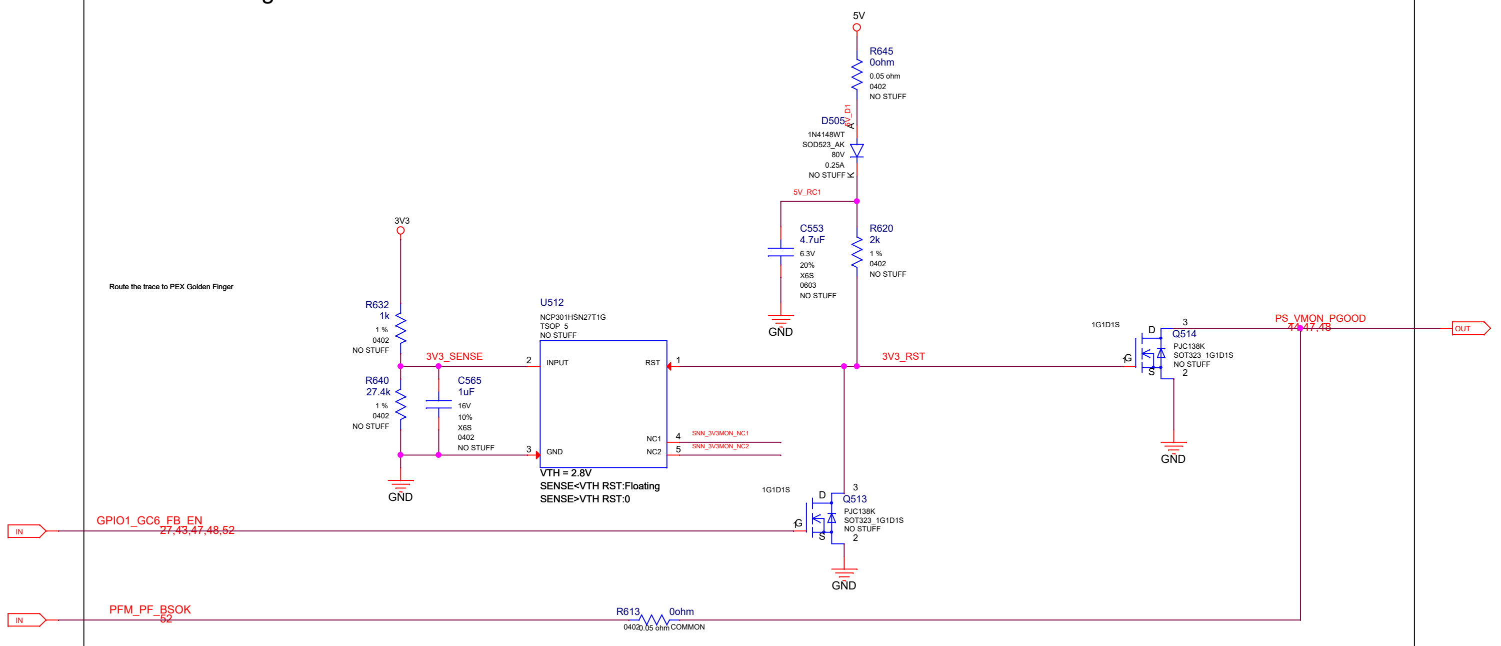
5V
R645
0ohm
0.05 ohm
0402
NO STUFF
D505
5V_D1
A
1N4148WT
SOD523_AK
80V
0.25A
NO STUFF
K
5V_RC1
C553
4.7uF
6.3V
20%
X6S
0603
NO STUFF
GND
R620
2k
1 %
0402
NO STUFF
Route the trace to PEX Golden Finger
3V3
R632
1k
1 %
0402
NO STUFF
3V3_SENSE
R640
27.4k
1 %
0402
NO STUFF
C565
1uF
16V
10%
X6S
0402
NO STUFF
GND
U512
NCP301HSN27T1G
TSOP_5
NO STUFF
2
INPUT
RST
1
3
GND
NC1
4
NC2
5
SNN_3V3MON_NC1
SNN_3V3MON_NC2
VTH = 2.8V
SENSE<VTH RST:Floating
SENSE>VTH RST:0
3V3_RST
1G1D1S
D
3
Q514
PJC138K
SOT323_1G1D1S
NO STUFF
G
1
S
2
GND
PS_VMON_PGOOD
44,47,48
OUT
1G1D1S
D
3
Q513
PJC138K
SOT323_1G1D1S
NO STUFF
G
1
S
2
GND
IN
GPIO1_GC6_FB_EN
27,43,47,48,52
IN
PFM_PF_BSOK
52
R613
0ohm
0402
0.05 ohm
COMMON

BOM Configuration

OPTIONS	PEX3V3_SENSE	PEX12V_SENSE	OTHER_12V_SENSE
Use Pre-Filter	Pre-Filter	Pre-Filter	Pre-Filter
NO Pre-Filter	Voltage_Monitor	Voltage_Monitor	N/A

Signal	Direction	Function
3V3	INPUT	Sense the 3V3 Voltage from PCIE golden finger
12V	INPUT	Sense the 12V Voltage from PCIE golden finger
PS_VMON_PGOOD	OPEN-DRAIN	Floating(H) once both 3V3 and 12V reach Vth
GC6_FB_EN	INPUT	Indicator for RTD3/GC6 residence,Use to Mask the VMON_PGOOD
PS_PF_SKIP	INPUT	From INA3221(VPU) or Pre-filter(SKIP)
PS_PF_BSOK	INPUT	From INA3221(PV) or Pre-filter(BS_OK)

ASSEMBLY	<ASSEMBLY_DESCRIPTION>
PAGE DETAIL	SEQ: VOLTAGE MONITOR

ALL NVIDIA DESIGN SPECIFICATIONS, REFERENCE SPECIFICATIONS, REFERENCE BOARDS, FILES, DRAWINGS, DIAGNOSTICS, LISTS AND OTHER DOCUMENTS OR INFORMATION (TOGETHER AND SEPARATELY, 'MATERIALS') ARE BEING PROVIDED 'AS IS'. THE MATERIALS MAY CONTAIN KNOWN AND UNKNOWN VIOLATIONS OR DEVIATIONS OF INDUSTRY STANDARDS AND SPECIFICATIONS. NVIDIA MAKES NO WARRANTIES, EXPRESSED, IMPLIED, STATUTORY OR OTHERWISE WITH RESPECT TO THE MATERIALS OR OTHERWISE, AND EXPRESSLY DISCLAIMS ALL IMPLIED WARRANTIES INCLUDING, WITHOUT LIMITATION, THE WARRANTIES OF DESIGN, OF NONINFRINGEMENT, MERCHANTABILITY OR FITNESS FOR A PARTICULAR PURPOSE, OR ARISING FROM A COURSE OF DEALING, TRADE USAGE, TRADE PRACTICE, OR INDUSTRY STANDARDS.

RD Center
Colorful Co.,Ltd
深圳市七彩虹科技发展有限公司

Size	Document Number	Rev
Custom	GA104H8-E10	A

Date: Monday, July 13, 2020
Sheet 50 of 57

Page51: FAN&LED

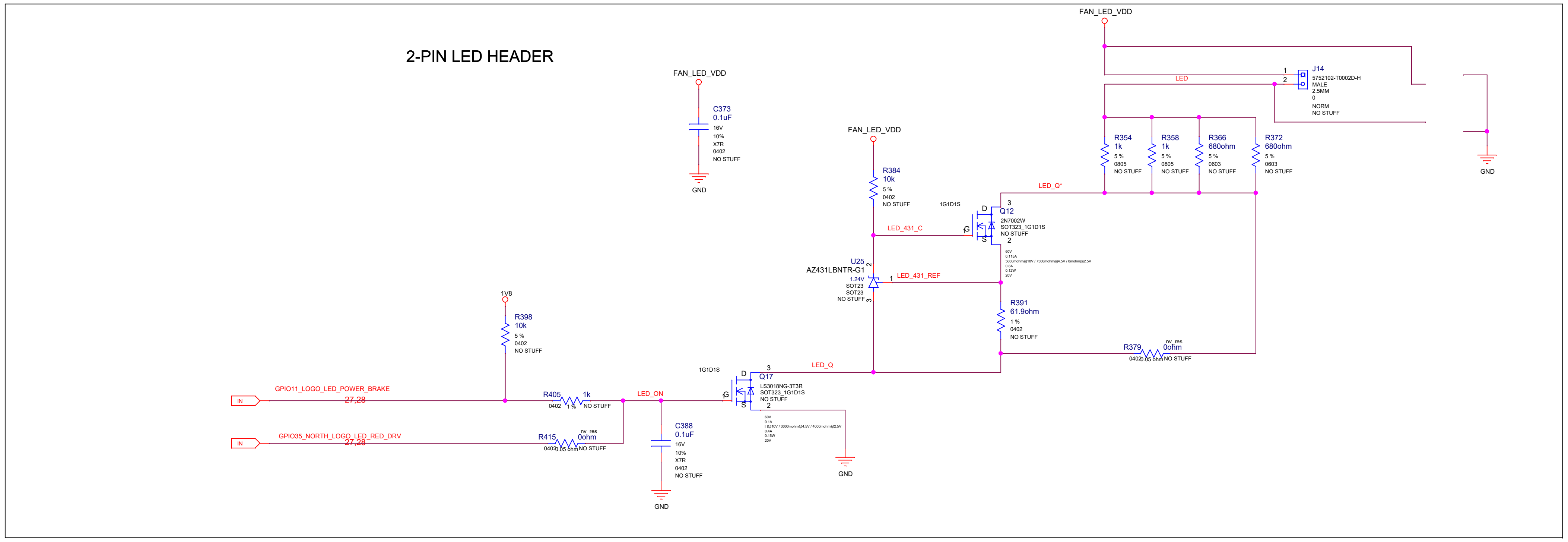
2-PIN LED HEADER
FAN_LED_VDD
C373
0.1uF
16V
10%
X7R
0402
NO STUFF
GND
FAN_LED_VDD
R384
10k
5 %
0402
NO STUFF
1G1D1S
LED_431_C
Q12
2N7002W
SOT323_1G1D1S
NO STUFF
60V
0.115A
5000mohm@10V / 7500mohm@4.5V / 0mohm@2.5V
0.8A
0.12W
20V
U25
AZ431LBNTR-G1
1.24V
SOT23
SOT23
NO STUFF
LED_431_REF
R391
61.9ohm
1 %
0402
NO STUFF
R379
0ohm
nv_res
0402
0.05 ohm
NO STUFF
LED_Q
LED_Q*
FAN_LED_VDD
J14
5752102-T0002D-H
MALE
2.5MM
0
NORM
NO STUFF
LED
R354
1k
5 %
0805
NO STUFF
R358
1k
5 %
0805
NO STUFF
R366
680ohm
5 %
0603
NO STUFF
R372
680ohm
5 %
0603
NO STUFF
GND
1V8
R398
10k
5 %
0402
NO STUFF
IN
GPIO11_LOGO_LED_POWER_BRAKE
27,28
IN
GPIO35_NORTH_LOGO_LED_RED_DRV
27,28
R405
1k
0402
1 %
NO STUFF
R415
0ohm
nv_res
0402
0.05 ohm
NO STUFF
LED_ON
C388
0.1uF
16V
10%
X7R
0402
NO STUFF
GND
1G1D1S
Q17
LS3018NG-3T3R
SOT323_1G1D1S
NO STUFF
60V
0.1A
[ ]@10V / 3000mohm@4.5V / 4000mohm@2.5V
0.4A
0.15W
20V
GND

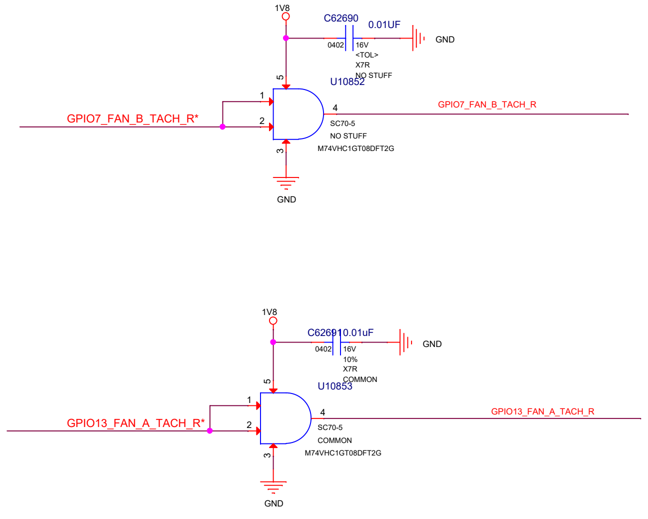
1V8
C62690
0.01UF
0402
16V
<TOL>
X7R
NO STUFF
GND
U10852
GPIO7_FAN_B_TACH_R*
GPIO7_FAN_B_TACH_R
SC70-5
NO STUFF
M74VHC1GT08DFT2G
GND
1V8
C62691
0.01uF
0402
16V
10%
X7R
COMMON
GND
U10853
GPIO13_FAN_A_TACH_R*
GPIO13_FAN_A_TACH_R
SC70-5
COMMON
M74VHC1GT08DFT2G
GND

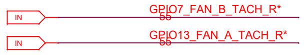
IN
GPIO7_FAN_B_TACH_R*
55
IN
GPIO13_FAN_A_TACH_R*
55

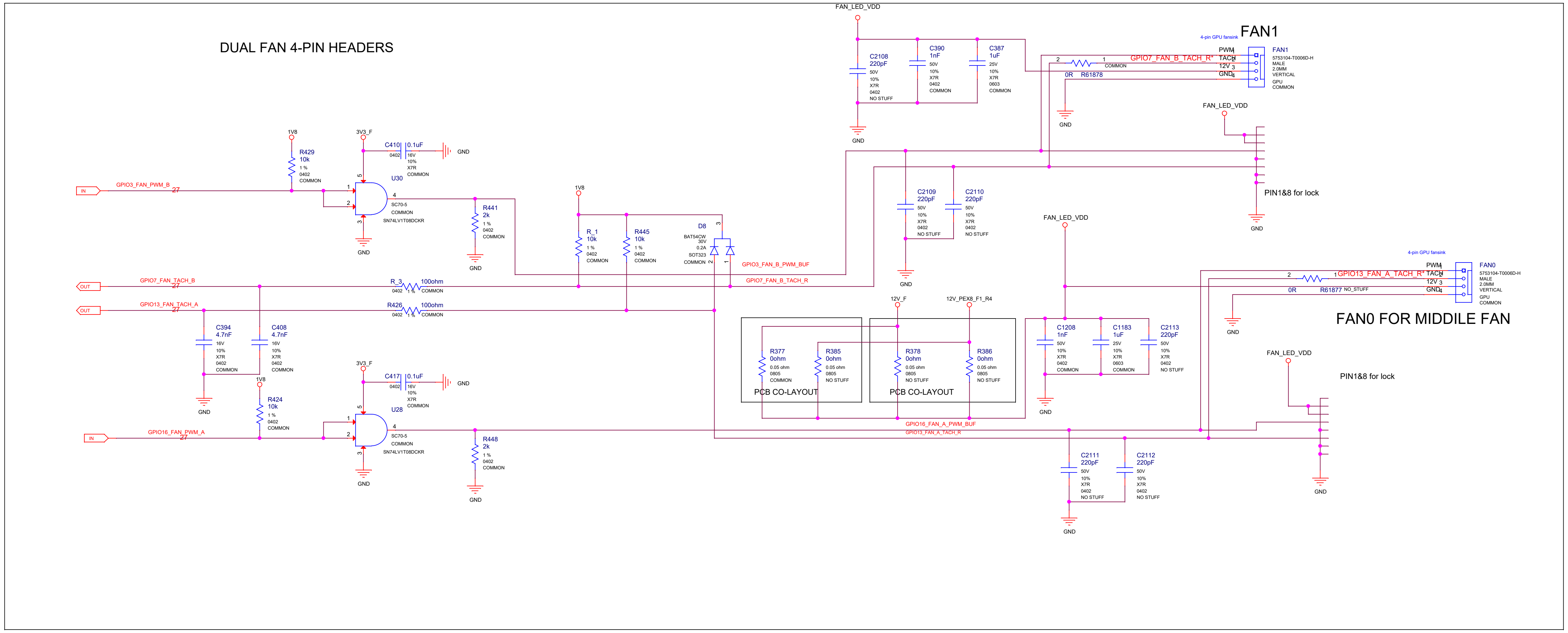
DUAL FAN 4-PIN HEADERS
1V8
R429
10k
1 %
0402
COMMON
3V3_F
C410
0.1uF
0402
16V
10%
X7R
COMMON
GND
U30
SC70-5
COMMON
SN74LV1T08DCKR
GND
IN
GPIO3_FAN_PWM_B
27
R441
2k
1 %
0402
COMMON
GND
1V8
R_1
10k
1 %
0402
COMMON
R445
10k
1 %
0402
COMMON
D8
BAT54CW
30V
0.2A
SOT323
COMMON
GPIO3_FAN_B_PWM_BUF
GPIO7_FAN_B_TACH_R
OUT
GPIO7_FAN_TACH_B
27
R_3
100ohm
0402
1 %
COMMON
OUT
GPIO13_FAN_TACH_A
27
R426
100ohm
0402
1 %
COMMON
C394
4.7nF
16V
10%
X7R
0402
COMMON
C408
4.7nF
16V
10%
X7R
0402
COMMON
GND
1V8
R424
10k
1 %
0402
COMMON
3V3_F
C417
0.1uF
0402
16V
10%
X7R
COMMON
GND
U28
SC70-5
COMMON
SN74LV1T08DCKR
GND
IN
GPIO16_FAN_PWM_A
27
R448
2k
1 %
0402
COMMON
GND
FAN_LED_VDD
C2108
220pF
50V
10%
X7R
0402
NO STUFF
C390
1nF
50V
10%
X7R
0402
COMMON
C387
1uF
25V
10%
X7R
0603
COMMON
GND
4-pin GPU fansink
FAN1
GPIO7_FAN_B_TACH_R*
COMMON
0R
R61878
PWM
TACH
12V
GND
FAN1
5753104-T0006D-H
MALE
2.0MM
VERTICAL
GPU
COMMON
GND
FAN_LED_VDD
PIN1&8 for lock
GND
C2109
220pF
50V
10%
X7R
0402
NO STUFF
C2110
220pF
50V
10%
X7R
0402
NO STUFF
GND
FAN_LED_VDD
12V_F
12V_PEX8_F1_R4
R377
0ohm
0.05 ohm
0805
COMMON
R385
0ohm
0.05 ohm
0805
NO STUFF
PCB CO-LAYOUT
R378
0ohm
0.05 ohm
0805
NO STUFF
R386
0ohm
0.05 ohm
0805
NO STUFF
PCB CO-LAYOUT
C1208
1nF
50V
10%
X7R
0402
COMMON
C1183
1uF
25V
10%
X7R
0603
COMMON
C2113
220pF
50V
10%
X7R
0402
NO STUFF
GND
4-pin GPU fansink
GPIO13_FAN_A_TACH_R*
0R
R61877
NO_STUFF
PWM
TACH
12V
GND
FAN0
5753104-T0006D-H
MALE
2.0MM
VERTICAL
GPU
COMMON
GND
FAN0 FOR MIDDILE FAN
FAN_LED_VDD
PIN1&8 for lock
GND
GPIO16_FAN_A_PWM_BUF
GPIO13_FAN_A_TACH_R
C2111
220pF
50V
10%
X7R
0402
NO STUFF
C2112
220pF
50V
10%
X7R
0402
NO STUFF
GND

ASSEMBLY	<ASSEMBLY_DESCRIPTION>
PAGE DETAIL	FAN & LED

ALL NVIDIA DESIGN SPECIFICATIONS, REFERENCE SPECIFICATIONS, REFERENCE BOARDS, FILES, DRAWINGS, DIAGNOSTICS, LISTS AND OTHER DOCUMENTS OR INFORMATION (TOGETHER AND SEPARATELY, 'MATERIALS') ARE BEING PROVIDED 'AS IS'. THE MATERIALS MAY CONTAIN KNOWN AND UNKNOWN VIOLATIONS OR DEVIATIONS OF INDUSTRY STANDARDS AND SPECIFICATIONS. NVIDIA MAKES NO WARRANTIES, EXPRESSED, IMPLIED, STATUTORY OR OTHERWISE WITH RESPECT TO THE MATERIALS OR OTHERWISE, AND EXPRESSLY DISCLAIMS ALL IMPLIED WARRANTIES INCLUDING, WITHOUT LIMITATION, THE WARRANTIES OF DESIGN, OF NONINFRINGEMENT, MERCHANTABILITY OR FITNESS FOR A PARTICULAR PURPOSE, OR ARISING FROM A COURSE OF DEALING, TRADE USAGE, TRADE PRACTICE, OR INDUSTRY STANDARDS.

RD Center
Colorful Co.,Ltd
深圳市七彩虹科技发展有限公司

Size	Document Number	Rev
Custom	GA104H8-E10	A

Date: Wednesday, July 22, 2020 Sheet 51 of 57

Page52: OVRM_PWR SENSE

MODE PIN STATUS	MULTIPLEXER OPERATION
LOW	DEVICE A
TRI-STATE(FLOATING)	STAND-ALONE
HIGH	DEVICE B

ENABLE PIN STATUS	MULTIPLEXER OPERATION
LOW	FULLY FUNCTIONAL
TRI-STATE(FLOATING)	LIMITTED FUNCTION
HIGH	STANDBY

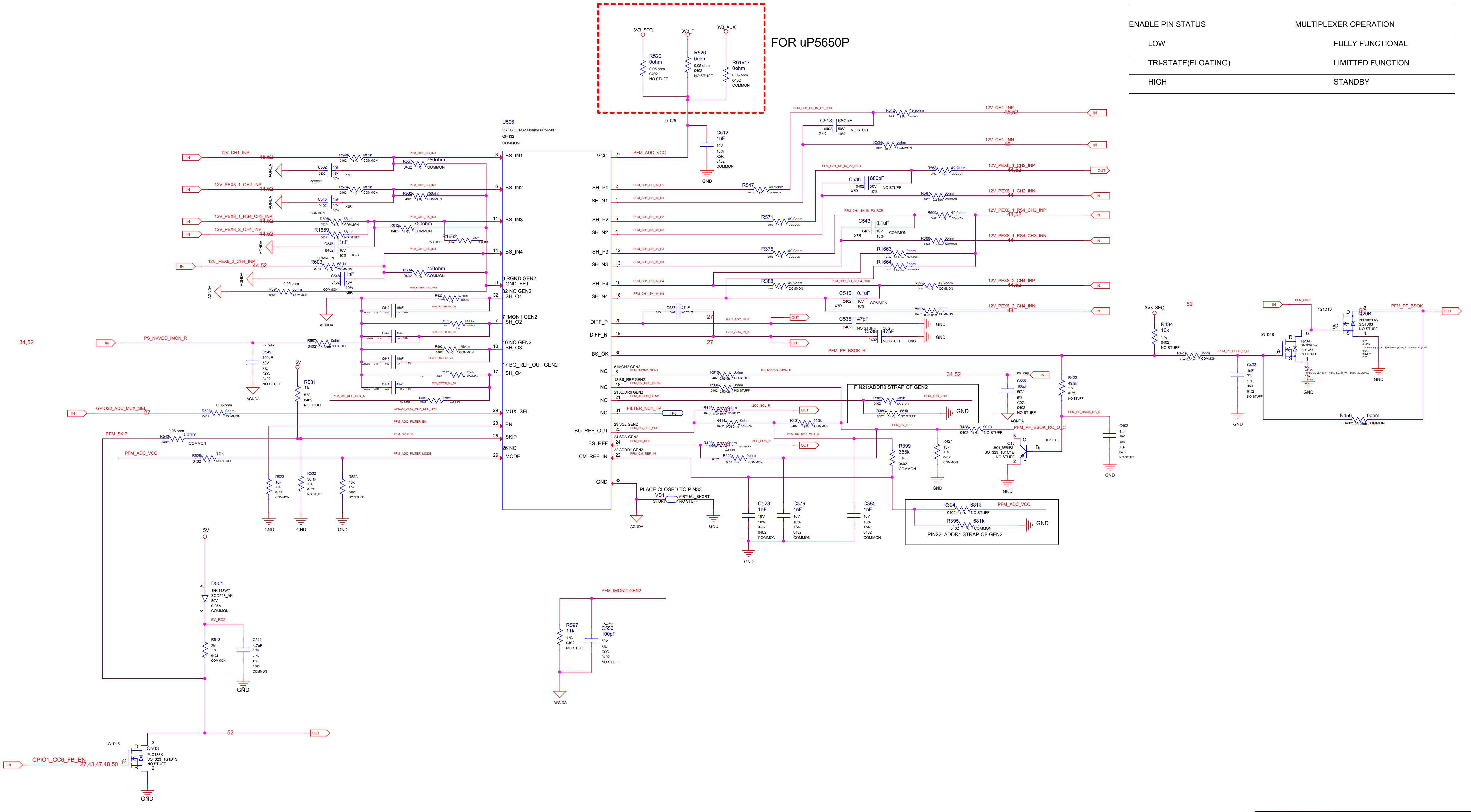
FOR uP5650P
3V3_SEQ
3V3_F
3V3_AUX
R520 0ohm 0.05 ohm 0402 NO STUFF
R526 0ohm 0.05 ohm 0402 NO STUFF
R61917 0ohm 0.05 ohm 0402 COMMON
0.125
C512 1uF 10V 10% X5R 0402 COMMON
U506
VREG QFN32 Monitor uP5650P
QFN32
COMMON
BS_IN1
BS_IN2
BS_IN3
BS_IN4
RGND GEN2 GND_FET
NC GEN2 SH_O1
IMON1 GEN2 SH_O2
NC GEN2 SH_O3
BG_REF_OUT GEN2 SH_O4
MUX_SEL
EN
SKIP
NC
MODE
VCC
SH_P1
SH_N1
SH_P2
SH_N2
SH_P3
SH_N3
SH_P4
SH_N4
DIFF_P
DIFF_N
BS_OK
NC
NC
NC
NC
BG_REF_OUT
BS_REF
CM_REF_IN
GND
PFM_ADC_VCC
12V_CH1_INP
12V_CH1_INN
12V_PEX8_1_CH2_INP
12V_PEX8_1_CH2_INN
12V_PEX8_1_RS4_CH3_INP
12V_PEX8_1_RS4_CH3_INN
12V_PEX8_2_CH4_INP
12V_PEX8_2_CH4_INN
45,52
44,52
PS_NVVDD_IMON_R
34,52
GPIO22_ADC_MUX_SEL
27
PFM_SKIP
PFM_ADC_VCC
FILTER_NC4_TP
TP8
PFM_PF_BSOK_R
PFM_PF_BSOK
PFM_PF_BSOK_RC_Q_C
PIN21:ADDR0 STRAP OF GEN2
PIN22: ADDR1 STRAP OF GEN2
R394 681k 0402 NO STUFF
R395 681k 0402 COMMON
PLACE CLOSED TO PIN33
VS1 SHUNT
VIRTUAL_SHORT NO STUFF
C528 1nF
C379 1nF
C385 1nF
R399 365k
R434 10k
R422 49.9k
R456 0ohm
Q20A 2N7002DW SOT363 NO STUFF
Q20B 2N7002DW SOT363 NO STUFF
Q18
AGNDA
GND
5V
D501 1N4148WT SOD523_AK 80V 0.25A COMMON
5V_RC2
R518 2k
C511 4.7uF
PFM_IMON2_GEN2
R597 11k 1% 0402 NO STUFF
C550 100pF 50V 5% C0G 0402 NO STUFF
Q503 PJC138K SOT323_1G1D1S NO STUFF
GPIO1_GC6_FB_EN
27,43,47,48,50
52
IN
OUT

ASSEMBLY	<ASSEMBLY_DESCRIPTION>
PAGE DETAIL	PS:OVRM_PWR_SENSE

RD Center
Colorful Co.,Ltd
深圳市七彩虹科技发展有限公司

Size	Document Number	Rev
Custom	GA104H8-E10	A

Date: Tuesday, July 14, 2020 Sheet 52 of 57

ALL NVIDIA DESIGN SPECIFICATIONS, REFERENCE SPECIFICATIONS, REFERENCE BOARDS, FILES, DRAWINGS, DIAGNOSTICS, LISTS AND OTHER DOCUMENTS OR INFORMATION (TOGETHER AND SEPARATELY, 'MATERIALS') ARE BEING PROVIDED 'AS IS'. THE MATERIALS MAY CONTAIN KNOWN AND UNKNOWN VIOLATIONS OR DEVIATIONS OF INDUSTRY STANDARDS AND SPECIFICATIONS. NVIDIA MAKES NO WARRANTIES, EXPRESSED, IMPLIED, STATUTORY OR OTHERWISE WITH RESPECT TO THE MATERIALS AND EXPRESSLY DISCLAIMS ALL IMPLIED WARRANTIES INCLUDING, WITHOUT LIMITATION, THE WARRANTIES OF DESIGN, OF NONINFRINGEMENT, MERCHANTABILITY OR FITNESS FOR A PARTICULAR PURPOSE, OR ARISING FROM A COURSE OF DEALING, TRADE USAGE, TRADE PRACTICE, OR INDUSTRY STANDARDS.

Page53: MECH

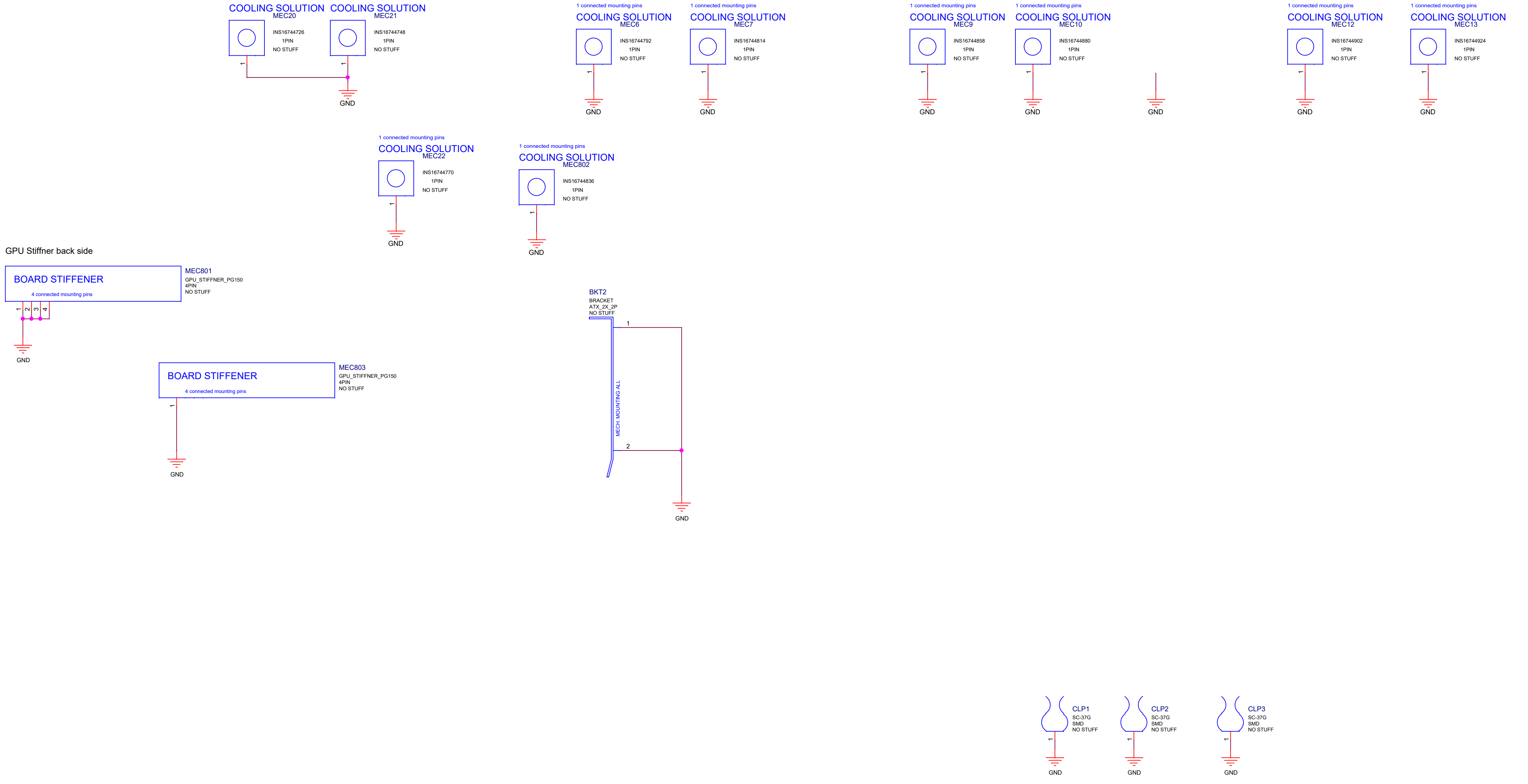
1 connected mounting pins
COOLING SOLUTION
MEC20
INS16744726
1PIN
NO STUFF
1
1 connected mounting pins
COOLING SOLUTION
MEC21
INS16744748
1PIN
NO STUFF
1
GND
1 connected mounting pins
COOLING SOLUTION
MEC6
INS16744792
1PIN
NO STUFF
1
GND
1 connected mounting pins
COOLING SOLUTION
MEC7
INS16744814
1PIN
NO STUFF
1
GND
1 connected mounting pins
COOLING SOLUTION
MEC9
INS16744858
1PIN
NO STUFF
1
GND
1 connected mounting pins
COOLING SOLUTION
MEC10
INS16744880
1PIN
NO STUFF
1
GND
GND
1 connected mounting pins
COOLING SOLUTION
MEC12
INS16744902
1PIN
NO STUFF
1
GND
1 connected mounting pins
COOLING SOLUTION
MEC13
INS16744924
1PIN
NO STUFF
1
GND
1 connected mounting pins
COOLING SOLUTION
MEC22
INS16744770
1PIN
NO STUFF
1
GND
1 connected mounting pins
COOLING SOLUTION
MEC802
INS16744836
1PIN
NO STUFF
1
GND
GPU Stiffner back side
BOARD STIFFENER
4 connected mounting pins
MEC801
GPU_STIFFNER_PG150
4PIN
NO STUFF
1
2
3
4
GND
BOARD STIFFENER
4 connected mounting pins
MEC803
GPU_STIFFNER_PG150
4PIN
NO STUFF
1
GND
BKT2
BRACKET
ATX_2X_2P
NO STUFF
1
MECH. MOUNTING ALL
2
GND
CLP1
SC-37G
SMD
NO STUFF
1
GND
CLP2
SC-37G
SMD
NO STUFF
1
GND
CLP3
SC-37G
SMD
NO STUFF
1
GND

ASSEMBLY	<ASSEMBLY_DESCRIPTION>
PAGE DETAIL	MECH

ALL NVIDIA DESIGN SPECIFICATIONS, REFERENCE SPECIFICATIONS, REFERENCE BOARDS, FILES, DRAWINGS, DIAGNOSTICS, LISTS AND OTHER DOCUMENTS OR INFORMATION (TOGETHER AND SEPARATELY, 'MATERIALS') ARE BEING PROVIDED 'AS IS'. THE MATERIALS MAY CONTAIN KNOWN AND UNKNOWN VIOLATIONS OR DEVIATIONS OF INDUSTRY STANDARDS AND SPECIFICATIONS. NVIDIA MAKES NO WARRANTIES, EXPRESSED, IMPLIED, STATUTORY OR OTHERWISE WITH RESPECT TO THE MATERIALS OR OTHERWISE, AND EXPRESSLY DISCLAIMS ALL IMPLIED WARRANTIES INCLUDING, WITHOUT LIMITATION, THE WARRANTIES OF DESIGN, OF NONINFRINGEMENT, MERCHANTABILITY OR FITNESS FOR A PARTICULAR PURPOSE, OR ARISING FROM A COURSE OF DEALING, TRADE USAGE, TRADE PRACTICE, OR INDUSTRY STANDARDS.

RD Center
Colorful Co.,Ltd
深圳市七彩虹科技发展有限公司

Size
Custom
Document Number
GA104H8-E10
Rev
A
Date: Monday, July 13, 2020
Sheet 53 of 57

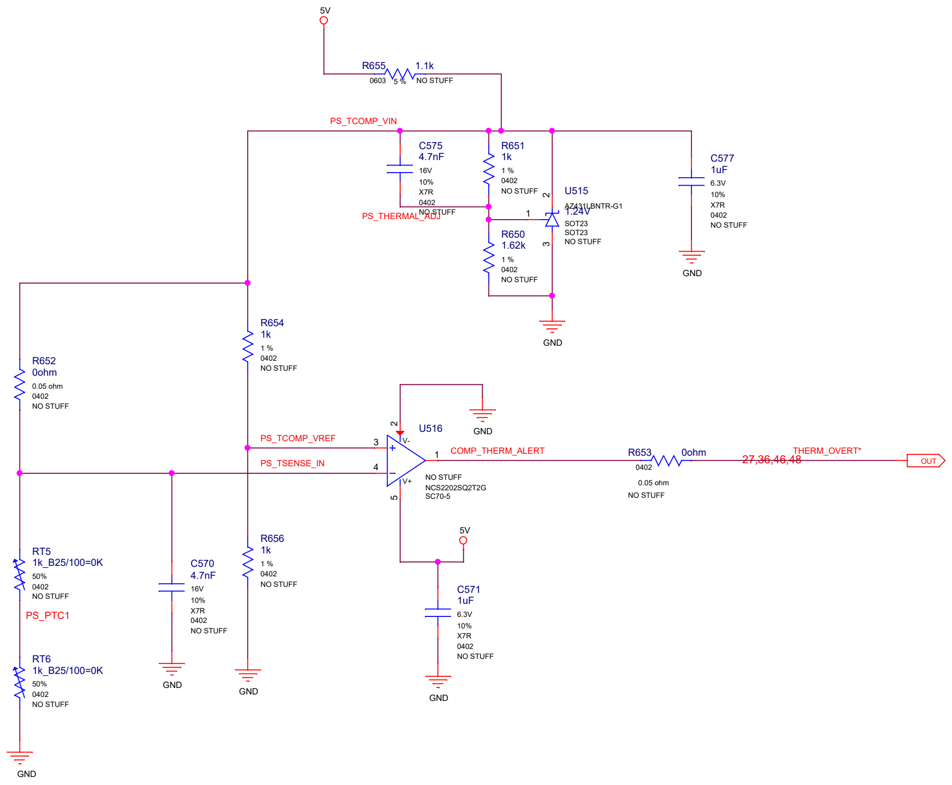
5V
R655
1.1k
0603
5 %
NO STUFF
PS_TCOMP_VIN
C575
4.7nF
16V
10%
X7R
0402
NO STUFF
PS_THERMAL_ADJ
R651
1k
1 %
0402
NO STUFF
U515
AZ431LBNTR-G1
1.24V
SOT23
SOT23
NO STUFF
2
1
3
R650
1.62k
1 %
0402
NO STUFF
GND
C577
1uF
6.3V
10%
X7R
0402
NO STUFF
GND
R654
1k
1 %
0402
NO STUFF
R652
0ohm
0.05 ohm
0402
NO STUFF
U516
2
V-
GND
PS_TCOMP_VREF
3
PS_TSENSE_IN
4
1
V+
5
COMP_THERM_ALERT
NO STUFF
NCS2202SQ2T2G
SC70-5
R653
0ohm
0402
0.05 ohm
NO STUFF
27,36,46,48
THERM_OVERT*
OUT
5V
RT5
1k_B25/100=0K
50%
0402
NO STUFF
PS_PTC1
RT6
1k_B25/100=0K
50%
0402
NO STUFF
GND
C570
4.7nF
16V
10%
X7R
0402
NO STUFF
GND
R656
1k
1 %
0402
NO STUFF
GND
C571
1uF
6.3V
10%
X7R
0402
NO STUFF
GND

Close to FBVDD MOS

ASSEMBLY	<ASSEMBLY_DESCRIPTION>
PAGE DETAIL	PTC

ALL NVIDIA DESIGN SPECIFICATIONS, REFERENCE SPECIFICATIONS, REFERENCE BOARDS, FILES, DRAWINGS, DIAGNOSTICS, LISTS AND OTHER DOCUMENTS OR INFORMATION (TOGETHER AND SEPARATELY, 'MATERIALS') ARE BEING PROVIDED 'AS IS'. THE MATERIALS MAY CONTAIN KNOWN AND UNKNOWN VIOLATIONS OR DEVIATIONS OF INDUSTRY STANDARDS AND SPECIFICATIONS. NVIDIA MAKES NO WARRANTIES, EXPRESSED, IMPLIED, STATUTORY OR OTHERWISE WITH RESPECT TO THE MATERIALS OR OTHERWISE, AND EXPRESSLY DISCLAIMS ALL IMPLIED WARRANTIES INCLUDING, WITHOUT LIMITATION, THE WARRANTIES OF DESIGN, OF NONINFRINGEMENT, MERCHANTABILITY OR FITNESS FOR A PARTICULAR PURPOSE, OR ARISING FROM A COURSE OF DEALING, TRADE USAGE, TRADE PRACTICE, OR INDUSTRY STANDARDS.

RD Center
Colorful Co.,Ltd
深圳市七彩虹科技发展有限公司

Size Custom
Document Number GA104H8-E10
Rev A
Date: Monday, July 13, 2020

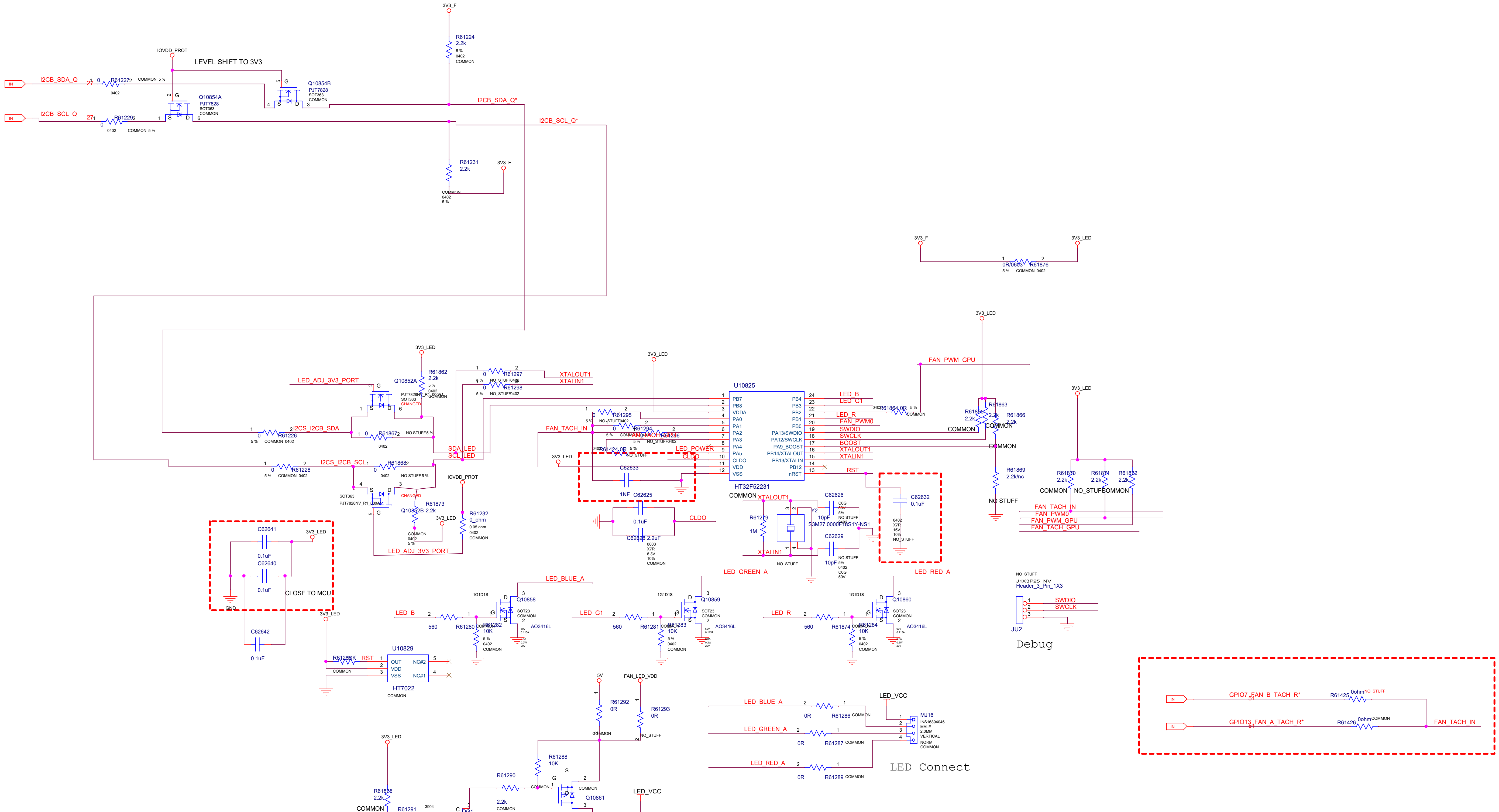
LEVEL SHIFT TO 3V3
IOVDD_PROT
3V3_F
I2CB_SDA_Q
I2CB_SCL_Q
R61272
R61229
R61224
2.2k
R61231
2.2k
Q10854A
PJT7828
Q10854B
I2CB_SDA_Q*
I2CB_SCL_Q*
3V3_LED
LED_ADJ_3V3_PORT
Q10852A
Q10852B
R61862
R61226
R61228
R61867
R61868
R61873
R61232
I2CS_I2CB_SDA
I2CS_I2CB_SCL
SDA_LED
SCL_LED
IOVDD_PROT
LED_ADJ_3V3_PORT
XTALOUT1
XTALIN1
R61297
R61298
U10825
HT32F52231
COMMON
PB7
PB8
VDDA
PA0
PA1
PA2
PA3
PA4
PA5
CLDO
VDD
VSS
PB4
PB3
PB2
PB1
PB0
PA13/SWDIO
PA12/SWCLK
PA9_BOOST
PB14/XTALOUT
PB13/XTALIN
PB12
nRST
LED_B
LED_G1
LED_R
FAN_PWM0
SWDIO
SWCLK
BOOST
XTALOUT1
XTALIN1
RST
FAN_TACH_IN
LED_POWER
CLDO
R61295
R61294
R61296
R61424
C62633
1NF
C62625
0.1uF
C62628
2.2uF
Y2
S3M27.0000F18S1YINS1
R61279
1M
C62626
10pF
C62629
10pF
C62632
0.1uF
NO_STUFF
FAN_PWM_GPU
R61863
R61865
R61866
R61869
2.2k/nc
NO STUFF
R61870
R61871
R61872
FAN_TACH_IN
FAN_PWM0
FAN_PWM_GPU
FAN_TACH_GPU
3V3_F
3V3_LED
R61876
0R/0603
C62641
C62640
0.1uF
C62642
CLOSE TO MCU
GND
U10829
HT7022
R61285
10K
RST
OUT
VDD
VSS
NC#2
NC#1
LED_BLUE_A
LED_GREEN_A
LED_RED_A
Q10858
Q10859
Q10860
AO3416L
R61280
R61281
R61874
560
R61282
R61283
R61284
10K
J1X3P25_NV
Header_3_Pin_1X3
JU2
SWDIO
SWCLK
Debug
5V
FAN_LED_VDD
R61292
R61293
0R
R61288
10K
R61290
2.2k
Q10861
QM3001K
R61836
2.2k
R61291
2.2k
LED_POWER
Q61
C62630
C62631
0.1uF
LED_VCC
LED_VCC
MJ16
R61286
R61287
R61289
0R
LED Connect
IN
GPIO7_FAN_B_TACH_R*
GPIO13_FAN_A_TACH_R*
R61425
R61426
0ohm
FAN_TACH_IN

```
PA2 风扇转速侦测(有BUG，需改成PA0或PA1)
PA3 MCU to GPU TACH
PA5 为LED电源控制口 高电压有效
PB0 风扇转速控制
PB2 MCU to GPU PWM
PB1 LED_RED
PB3 LED_GREEN
PB4 LED_BLUE
```

RD Center
Colorful Co.,Ltd
深圳市七彩虹科技发展有限公司

Size	Document Number	Rev
Custom	GA104H8-E10	A

Date: Monday, July 13, 2020 Sheet 55 of 57

PS: FBVDDQ OVR2+1

NCP81273 EN VIH >1.5V, VIL < 0.7V
UP9509/10 EN VIH >1.2V, VIL < 0.6V
RT8817A EN VIH >1.2V, VIL < 0.6V

12V
uP9510
NCP81273

5V
uP9509
RT8813
RT8817

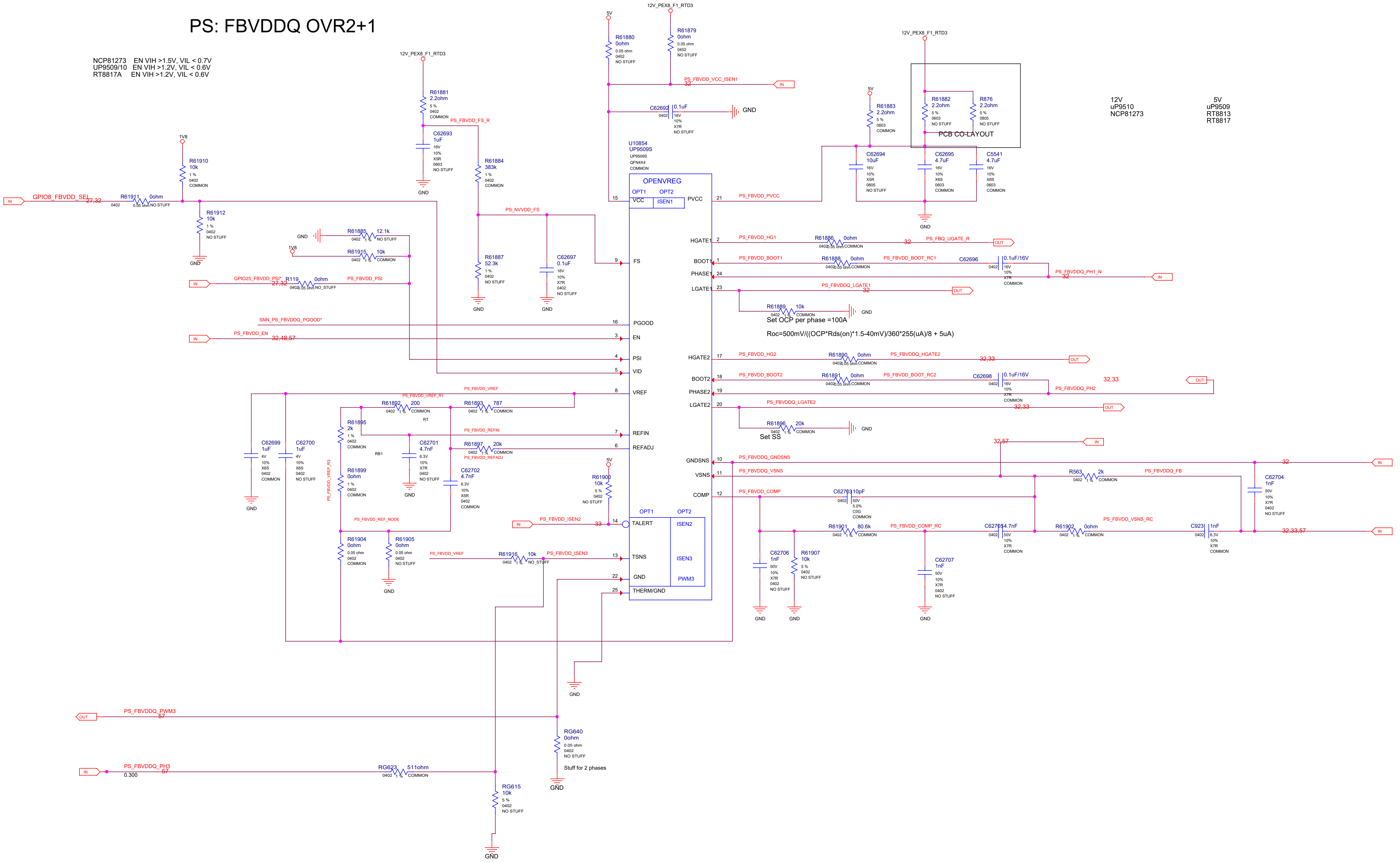
12V_PEX8_F1_RTD3
5V
1V8
GND
U10854
UP9509S
UP9509S
GFN4X4
COMMON
OPENVREG
OPT1
OPT2
VCC
ISEN1
PVCC
HGATE1
BOOT1
PHASE1
LGATE1
FS
PGOOD
EN
PSI
VID
VREF
REFIN
REFADJ
HGATE2
BOOT2
PHASE2
LGATE2
GNDSNS
VSNS
COMP
TALERT
ISEN2
ISEN3
TSNS
GND
PWM3
THERM/GND
R61880 0ohm 0.05 ohm 0402 NO STUFF
R61879 0ohm 0.05 ohm 0402 NO STUFF
R61881 2.2ohm 5 % 0402 COMMON
C62693 1uF 16V 10% X5R 0603 NO STUFF
R61884 383k 1 % 0402 COMMON
R61887 52.3k 1 % 0402 NO STUFF
C62697 0.1uF 16V 10% X7R 0402 NO STUFF
C62692 0.1uF 0402 16V 10% X7R NO STUFF
R61883 2.2ohm 5 % 0603 COMMON
R61882 2.2ohm 5 % 0603 NO STUFF
R876 2.2ohm 5 % 0805 NO STUFF
PCB CO-LAYOUT
C62694 10uF 16V 10% X5R 0805 NO STUFF
C62695 4.7uF 16V 10% X6S 0603 COMMON
C5541 4.7uF 16V 10% X6S 0603 COMMON
R61910 10k 1 % 0402 COMMON
R61911 0ohm 0402 0.05 ohm NO STUFF
R61912 10k 1 % 0402 NO STUFF
R61885 12.1k 0402 1 % NO STUFF
R61915 10k 0402 1 % COMMON
R119 0ohm 0402 0.05 ohm NO STUFF
R61886 0ohm 0402 0.05 ohm COMMON
R61888 0ohm 0402 0.05 ohm COMMON
C62696 0.1uF/16V 0402 16V 10% X7R COMMON
R61889 10k 0402 1 % COMMON
Set OCP per phase =100A
Roc=500mV/((OCP*Rds(on)*1.5-40mV)/360*255(uA)/8 + 5uA)
R61890 0ohm 0402 0.05 ohm COMMON
R61891 0ohm 0402 0.05 ohm COMMON
C62698 0.1uF/16V 0402 16V 10% X7R COMMON
R61896 20k 0402 1 % COMMON
Set SS
R61892 200 0402 1 % COMMON
R61893 787 0402 1 % COMMON
RT
R61895 2k 1 % 0402 COMMON
RB1
C62701 4.7nF 6.3V 10% X7R 0402 NO STUFF
R61897 20k 0402 1 % COMMON
C62702 4.7nF 6.3V 10% X5R 0402 COMMON
C62699 1uF 4V 10% X6S 0402 COMMON
C62700 1uF 4V 10% X6S 0402 NO STUFF
R61899 0ohm 1 % 0402 COMMON
R61900 10k 5 % 0402 NO STUFF
R61904 0ohm 0.05 ohm 0402 COMMON
R61905 0ohm 0.05 ohm 0402 NO STUFF
R61916 10k 0402 1 % NO_STUFF
C62703 10pF 0402 50V 5.0% C0G COMMON
R563 2k 0402 1 % COMMON
C62704 1nF 50V 10% X7R 0402 NO STUFF
R61901 80.6k 0402 1 % COMMON
C62705 4.7nF 0402 50V 10% X7R COMMON
R61902 0ohm 0402 1 % COMMON
C923 1nF 0402 6.3V 10% X7R COMMON
C62706 1nF 50V 10% X7R 0402 NO STUFF
R61907 10k 5 % 0402 NO STUFF
C62707 1nF 50V 10% X7R 0402 NO STUFF
RG640 0ohm 0.05 ohm 0402 NO STUFF
Stuff for 2 phases
RG623 511ohm 0402 1 % COMMON
RG615 10k 5 % 0402 NO STUFF
0.300
IN
OUT
GPIO8_FBVDD_SEL 27,32
GPIO25_FBVDD_PSI* 27,32
PS_FBVDD_PSI
SNN_PS_FBVDDQ_PGOOD*
PS_FBVDD_EN 32,48,57
PS_FBVDD_FS_R
PS_NVVDD_FS
PS_FBVDD_VCC_ISEN1 32
PS_FBVDD_PVCC
PS_FBVDD_HG1
PS_FBQ_UGATE_R 32
PS_FBVDD_BOOT1
PS_FBVDD_BOOT_RC1
PS_FBVDDQ_PH1_N 32
PS_FBVDDQ_LGATE1 32
PS_FBVDD_HG2
PS_FBVDDQ_HGATE2 32,33
PS_FBVDD_BOOT2
PS_FBVDD_BOOT_RC2
PS_FBVDDQ_PH2 32,33
PS_FBVDDQ_LGATE2 32,33
32,57
PS_FBVDDQ_GNDSNS 32
PS_FBVDDQ_VSNS
PS_FBVDDQ_FB
PS_FBVDD_COMP
PS_FBVDD_COMP_RC
PS_FBVDD_VSNS_RC 32,33,57
PS_FBVDD_VREF
PS_FBVDD_VREF_R1
PS_FBVDD_REFIN
PS_FBVDD_REFADJ
PS_FBVDD_VREF_R3
PS_FBVDD_REF_NODE
PS_FBVDD_ISEN2 33
PS_FBVDD_ISEN3
PS_FBVDDQ_PWM3 57
PS_FBVDDQ_PH3 57
15
21
2
1
24
23
9
16
3
4
5
8
7
6
17
18
19
20
10
11
12
14
13
22
25

	RD Center Colorful Co.,Ltd 深圳市七彩虹科技发展有限公司	
Size Custom	Document Number GA104H8-E10	Rev A
Date: Monday, July 13, 2020	Sheet 56 of 57	

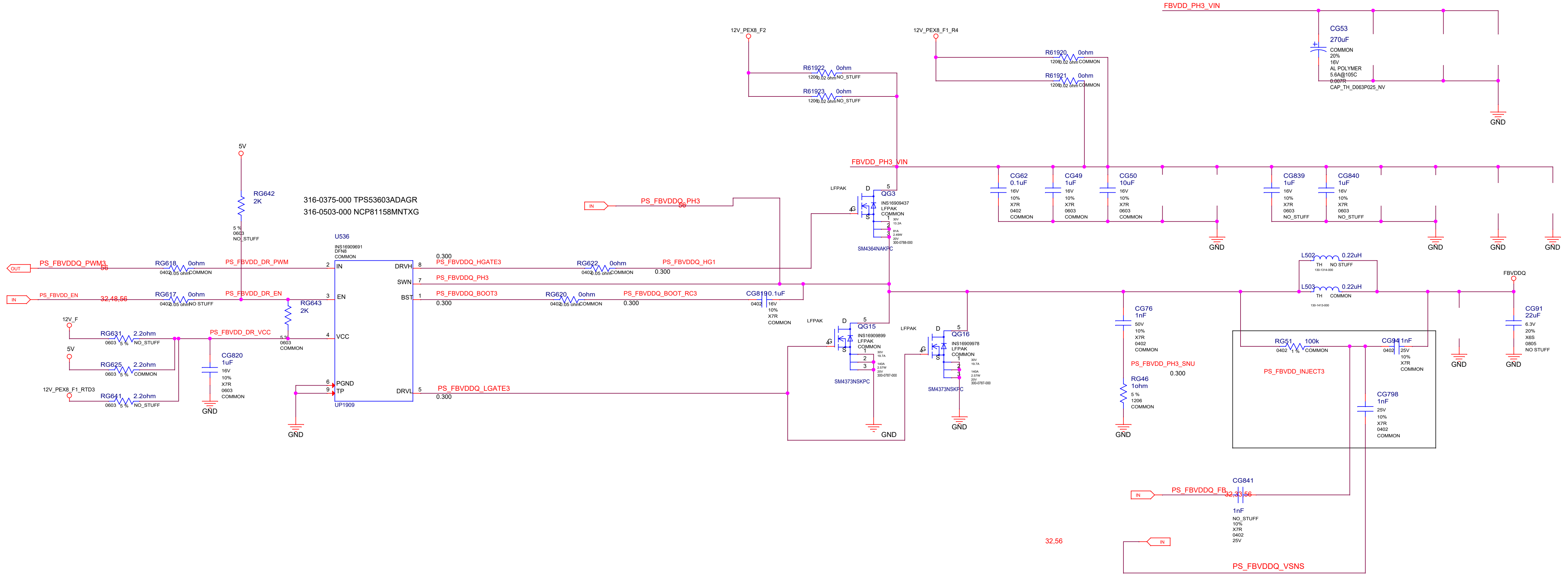
316-0375-000 TPS53603ADAGR
316-0503-000 NCP81158MNTXG
5V
RG642
2K
5 %
0603
NO_STUFF
U536
INS16909691
DFN8
COMMON
UP1909
IN
EN
VCC
PGND
TP
DRVH
SWN
BST
DRVL
OUT
PS_FBVDDQ_PWM3
56
RG618
0ohm
0402
0.05 ohm
COMMON
PS_FBVDD_DR_PWM
IN
PS_FBVDD_EN
32,48,56
RG617
0ohm
0402
0.05 ohm
NO STUFF
PS_FBVDD_DR_EN
RG643
2K
5 %
0603
COMMON
12V_F
RG631
2.2ohm
0603
5 %
NO_STUFF
5V
RG625
2.2ohm
0603
5 %
COMMON
12V_PEX8_F1_RTD3
RG641
2.2ohm
0603
5 %
NO_STUFF
PS_FBVDD_DR_VCC
CG820
1uF
16V
10%
X7R
0603
COMMON
GND
0.300
PS_FBVDDQ_HGATE3
RG622
0ohm
0402
0.05 ohm
COMMON
PS_FBVDDQ_HG1
0.300
PS_FBVDDQ_PH3
PS_FBVDDQ_BOOT3
0.300
RG620
0ohm
0402
0.05 ohm
COMMON
PS_FBVDDQ_BOOT_RC3
0.300
CG819
0.1uF
0402
16V
10%
X7R
COMMON
PS_FBVDDQ_LGATE3
0.300
IN
PS_FBVDDQ_PH3
56
12V_PEX8_F2
R61922
0ohm
1206
0.02 ohm
NO_STUFF
R61923
0ohm
1206
0.02 ohm
NO_STUFF
12V_PEX8_F1_R4
R61920
0ohm
1206
0.02 ohm
COMMON
R61921
0ohm
1206
0.02 ohm
COMMON
FBVDD_PH3_VIN
LFPAK
D
G
S
QG3
INS16909437
LFPAK
COMMON
30V
13.2A
81A
2.49W
20V
300-0788-000
SM4364NAKPC
QG15
INS16909899
LFPAK
COMMON
30V
19.7A
140A
2.57W
20V
300-0787-000
SM4373NSKPC
QG16
INS16909978
LFPAK
COMMON
30V
19.7A
140A
2.57W
20V
300-0787-000
SM4373NSKPC
FBVDD_PH3_VIN
CG53
270uF
COMMON
20%
16V
AL POLYMER
5.6A@105C
0.007R
CAP_TH_D063P025_NV
CG62
0.1uF
16V
10%
X7R
0402
COMMON
CG49
1uF
16V
10%
X7R
0603
COMMON
CG50
10uF
16V
10%
X7R
0603
COMMON
CG839
1uF
16V
10%
X7R
0603
NO_STUFF
CG840
1uF
16V
10%
X7R
0603
NO_STUFF
L502
0.22uH
TH
NO STUFF
130-1314-000
L503
0.22uH
TH
COMMON
130-1413-000
FBVDDQ
CG91
22uF
6.3V
20%
X6S
0805
NO STUFF
CG76
1nF
50V
10%
X7R
0402
COMMON
PS_FBVDD_PH3_SNU
0.300
RG46
1ohm
5 %
1206
COMMON
RG51
100k
0402
1 %
COMMON
CG94
1nF
0402
25V
10%
X7R
COMMON
PS_FBVDD_INJECT3
CG798
1nF
25V
10%
X7R
0402
COMMON
CG841
IN
PS_FBVDDQ_FB
32,33,56
1nF
NO_STUFF
10%
X7R
0402
25V
32,56
IN
PS_FBVDDQ_VSNS

RD Center
Colorful Co.,Ltd
深圳市七彩虹科技发展有限公司

Size	Document Number	Rev
Custom	GA104H8-E10	A

Date: Monday, August 03, 2020 Sheet 57 of 57