MS-V069 -- G73GT, 128/256 Mb DDR3-136pin, VGA, DVI-I, SD/HDTV, VIVO,HDMI

SUMMARY:

1. Base on V060-120 to Modify
2. BGA-136 DDRIII
3. Dual MS-11 for NVVDD and FBVDD

Table of Contents:

Page 1: TITLE
Page 2: PCIe INTERFACE
Page 3: FBA INTERFACE
Page 4: FB A1
Page 5: FBA DECOUPLING
Page 6: FB A2
Page 7: FBC INTERFACE
Page 8: FB C1
Page 9: FBC DECOUPLING
Page 10: FB C2
Page 11: MIOA/MIOB
Page 12: DACC
Page 13: DACA
Page 14: DACB
Page 15: VIDEO CAPTURE
Page 16: TMDS LINK A & B
Page 17: TMDS LINK C & D
Page 18: 4-Pin Video-In/SPDIF IN
Page 19: GPIO/ROM/HDCP ROM
Page 20: Straps/Mechanical
Page 21: Linear Power
Page 22: NVVDD with MS-11
Page 23: FBVDD with MS-11
Page 24: EXTERNAL HDMI LINK SII1930
Page 25: Micro Controller & Audio DAC

Rev History

OA

Page24 Add EXTERNAL HDMI LINK SII1930
Page25 Add Micro Controller & Audio DAC
Page 12 Remove DACC RGB and Sync signal
Page 17 Remove J5 DVI connector Link to HDMI
Page 18 Modify SPDIF IN circuit base on P364
Page19 Enable GPIO 1,7,10,12
Add Page21 Liner power 1.8V

100

1.Modify A3V3 circuit all 3V3 use PEX3V3 except 7115H A3V3
2.Change Y502 and J5511HDMI TYPE A Conn to SMD Type
3.Remove Extend 12V,MOS Heatsink and 4 pin Video Conn

16X PCIe Interface

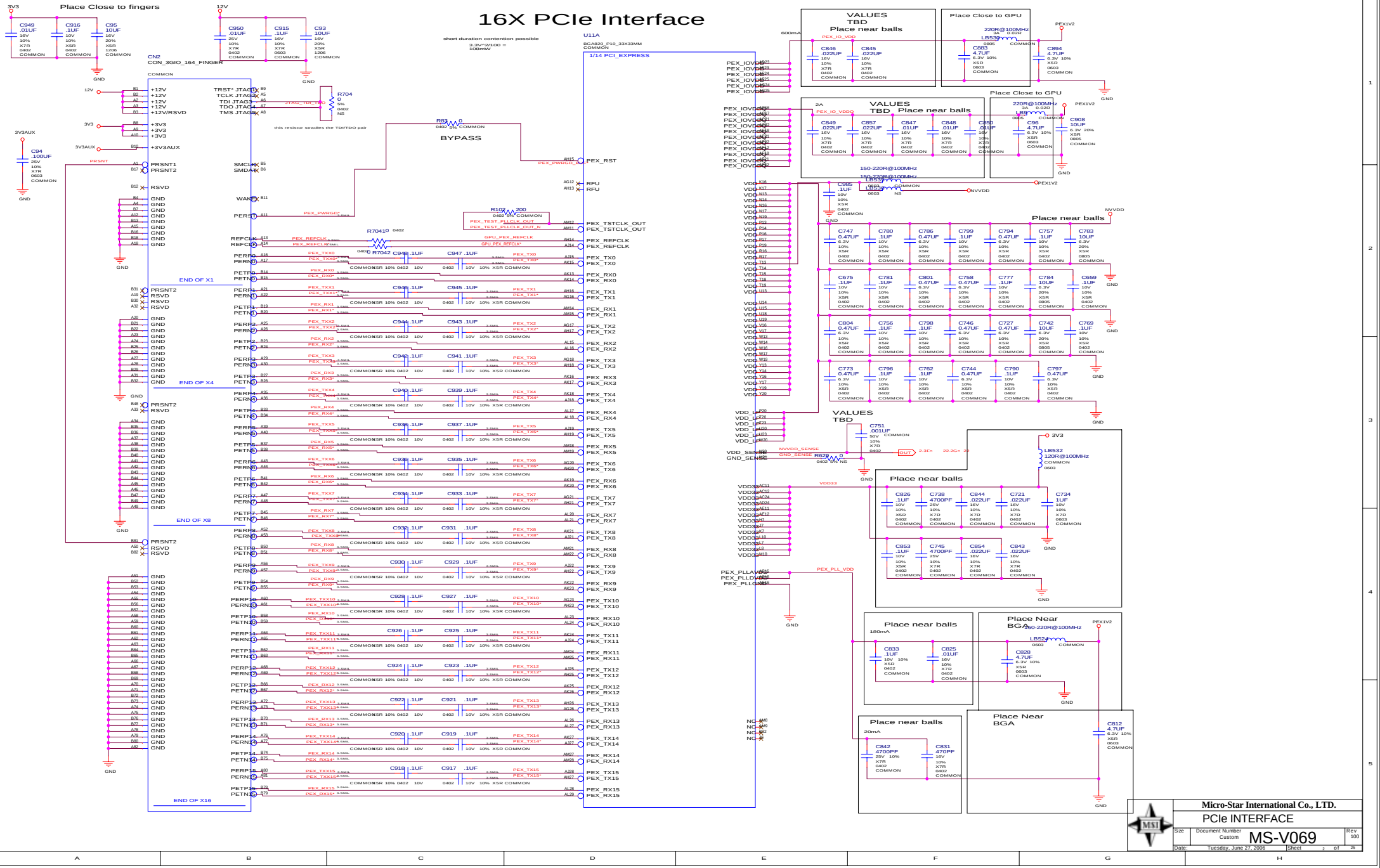

Micro-Star International Co., LTD.
PCIe INTERFACE
Size: Custom
Document Number: MS-V069
Rev: 100
Date: Tuesday, June 27, 2006
Sheet 2 of 25

U11B

ALL FBVDD PINS ARE NC ON NV43 DESKTOP G3 PACKAGE

BGA820_P10_33X33MM COMMON

2/14 FBA

PLACE BELOW GPU

PLACE MIDWAY BETWEEN GPU AND MEMORY

PLACE NEAR GPU

PLACE close to GPU

PLACE close to balls

TP NOW

FBx_PLLVDD NOT REQUIRED FOR G73 -- UNSTUFF

CKE Stuff options for DDR3 configation for on-die terminations at the memory
IMPORTANT FOR POWER ON INITIALIZATION OF DDR3 MEMS

DDR3: DETERMINES THE ODT VALUE FOR ADDR AND CONTROL PINS
CKE = 0 --> ODT = ZQ/2
CKE = 1 --> ODT = ZQ

VREF = FBVDDQ * Rbot/(Rtop + Rbot)

VREF = 0.70 * FBVDDQ (DDR3: 1.26V = 1.8V * 2.7K/(1.15K + 2.7K))

FBA_AVDD is TBD. This may not be hooked up on the Package.

Micro-Star International Co., LTD.	
FBA INTERFACE	
Size: Custom	Document Number: MS-V069
Rev: 100	
Date: Tuesday, June 27, 2006	Sheet 3 of 25

FrameBuffer: Partition A
16Mx32 BGA136 DDR3

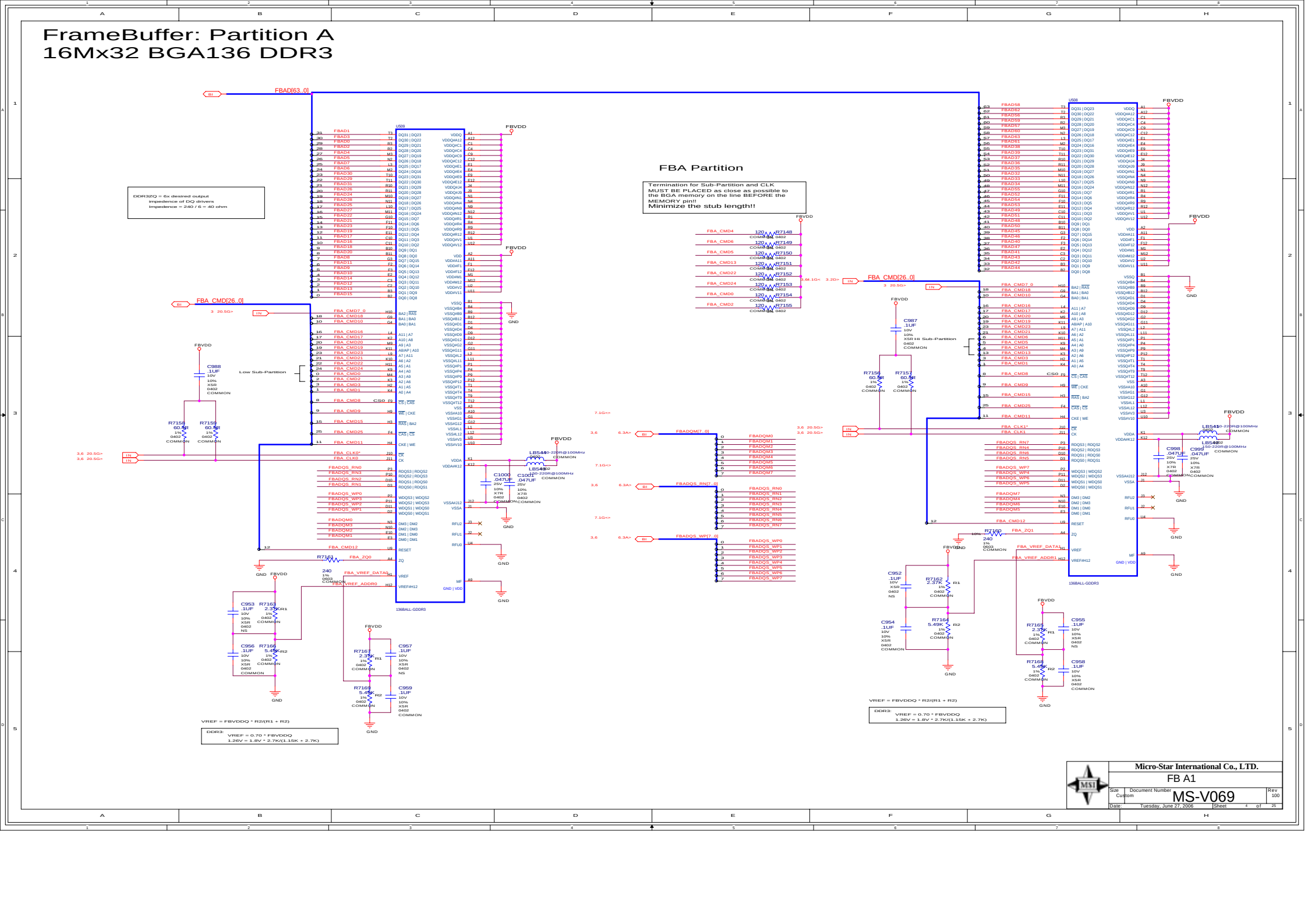

FRAME BUFFER: PARTITION A DECOUPLING

Decoupling for FBA 0..31

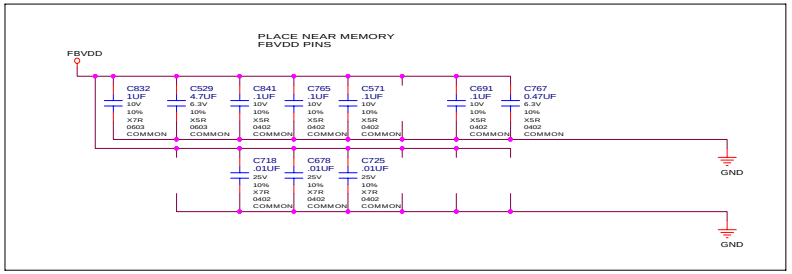

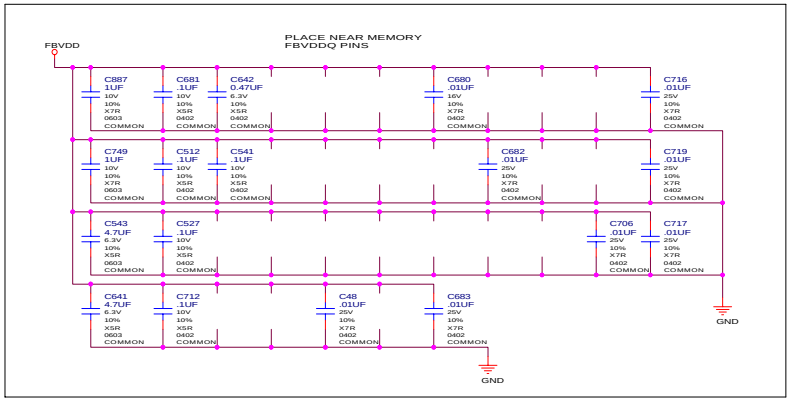

Decoupling for FBA 32..63

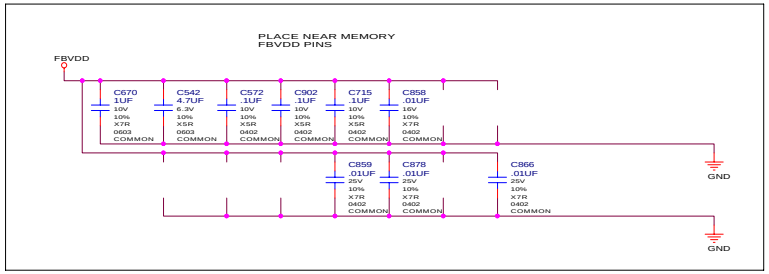

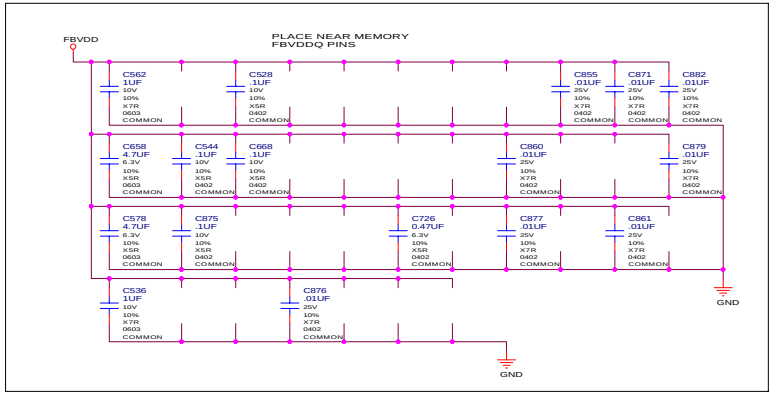

Micro-Star International Co., LTD.	
FBA DECOUPLING	
Size: Custom	Document Number: MS-V069
Rev: 100	
Date: Tuesday, June 27, 2006	Sheet 5 of 25

FrameBuffer: Partition A
16Mx32 BGA136 DDR3

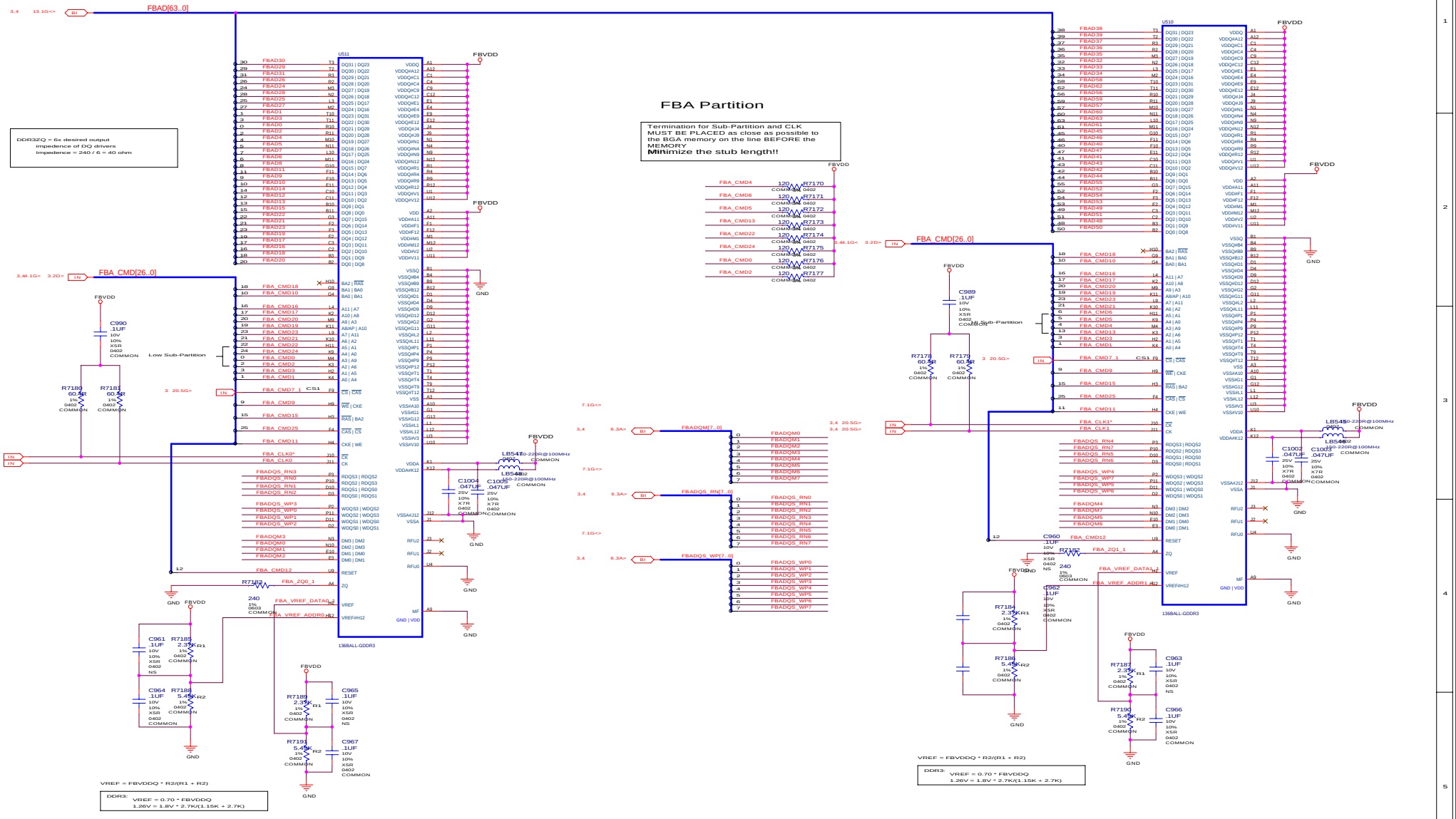

Micro-Star International Co., LTD.	
FB A2	
Size: Custom	Document Number: MS-V069
Rev: 100	
Date: Tuesday, June 27, 2006	Sheet 6 of 25

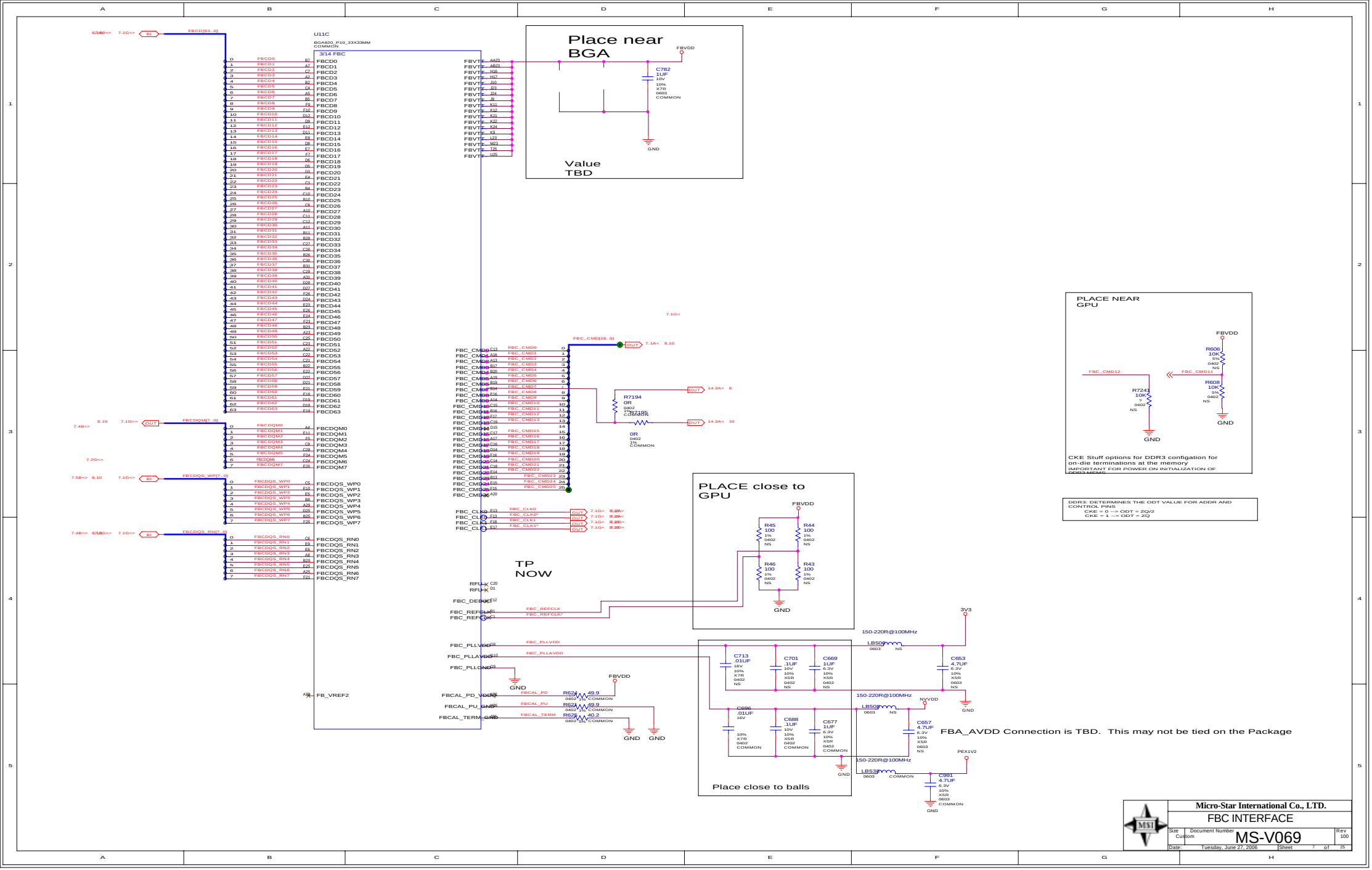

U11C
BGA820_P10_33X33MM
COMMON
3/14 FBC
Place near BGA
Value TBD
C782 1UF 10V X7R 0603 COMMON
FBVDD
GND
PLACE NEAR GPU
R606 10K 5% 0402 NS
R608 10K 5% 0402 NS
R7241 10K 5% 0402 NS
FBC_CMD12
FBC_CMD11
CKE Stuff options for DDR3 configation for on-die terminations at the memory
IMPORTANT FOR POWER ON INITIALIZATION OF DDR3 MEMS
DDR3: DETERMINES THE ODT VALUE FOR ADDR AND CONTROL PINS
CKE = 0 --> ODT = ZQ/2
CKE = 1 --> ODT = ZQ
R7194 0R 0402 1% COMMON
R7195 0R 0402 1% COMMON
PLACE close to GPU
R45 100 1% 0402 NS
R44 100 1% 0402 NS
R46 100 1% 0402 NS
R43 100 1% 0402 NS
TP NOW
FBC_REFCLK
FBC_REFCLK*
FBC_PLLVDD
FBC_PLLAVDD
FBC_PLLGND
FB_VREF2
FBCAL_PD_VDD
FBCAL_PU_GND
FBCAL_TERM_GND
R624 49.9 0402 1% COMMON
R625 40.2 0402 5% COMMON
3V3
150-220R@100MHz
LB508 0603 NS
C713 .01UF 16V 10% X7R 0402 NS
C701 .1UF 10V 10% X5R 0402 NS
C669 1UF 6.3V 10% X5R 0402 NS
C653 4.7UF 6.3V 10% X5R 0603 NS
NVVDD
C606 .01UF 16V 10% X7R 0402 COMMON
C688 .1UF 10V 10% X5R 0402 COMMON
C677 1UF 6.3V 10% X5R 0402 COMMON
C657 4.7UF 6.3V 10% X5R 0603 NS
PEX1V2
LB538 0603 COMMON
C991 4.7UF 6.3V 10% X5R 0603 COMMON
Place close to balls
FBA_AVDD Connection is TBD. This may not be tied on the Package
Micro-Star International Co., LTD.
FBC INTERFACE
Size Custom
Document Number MS-V069
Rev 100
Date: Tuesday, June 27, 2006
Sheet 7 of 25

FRAMEBUFFER: PARTITION
C 16Mx32 BGA136 DDR3

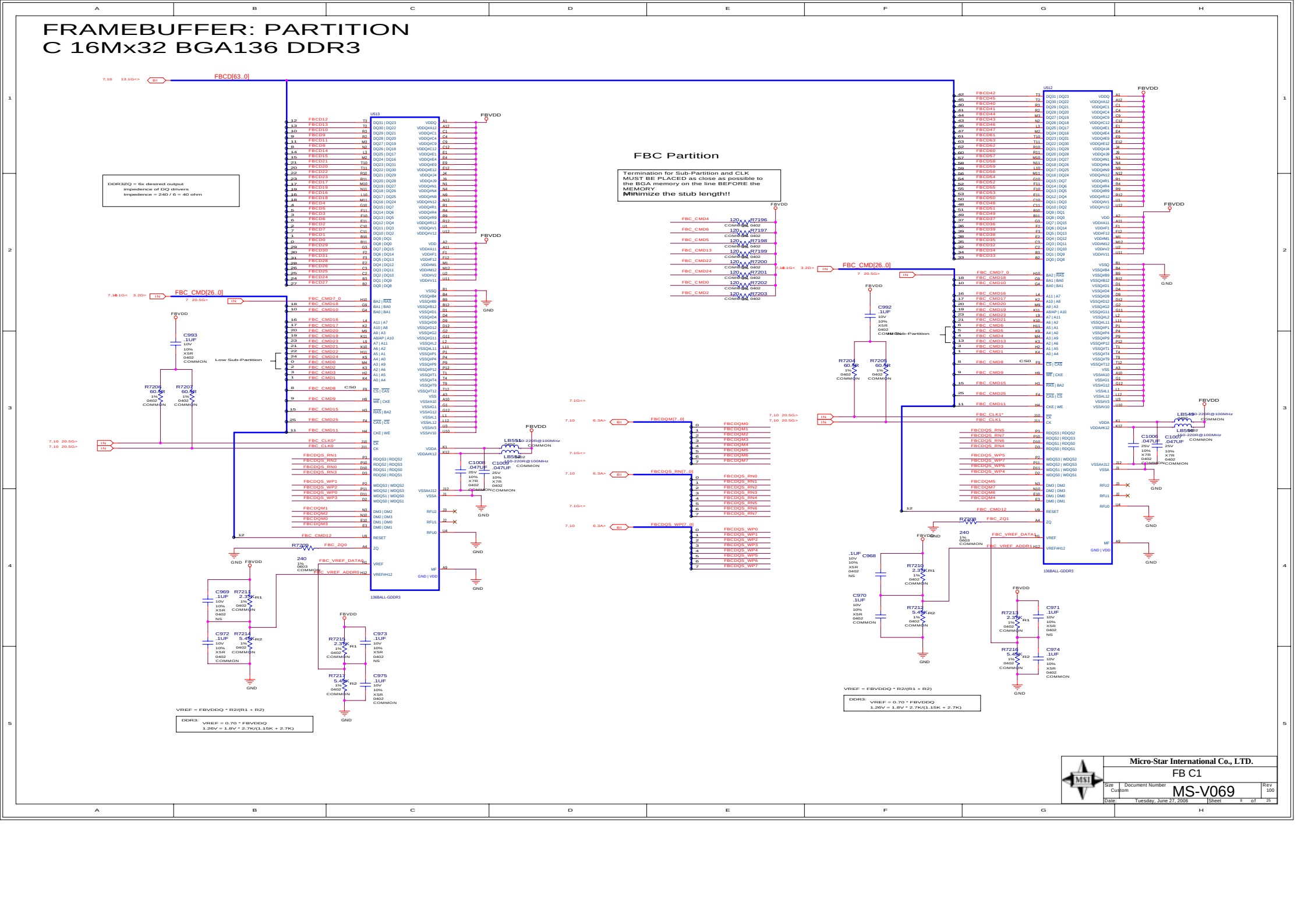

FRAMEBUFFER: PARTITION C DECOUPLING

Decoupling for FBC 0..31

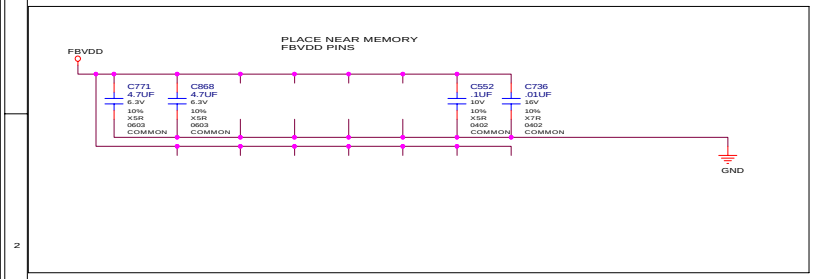

Decoupling for FBC 32..63

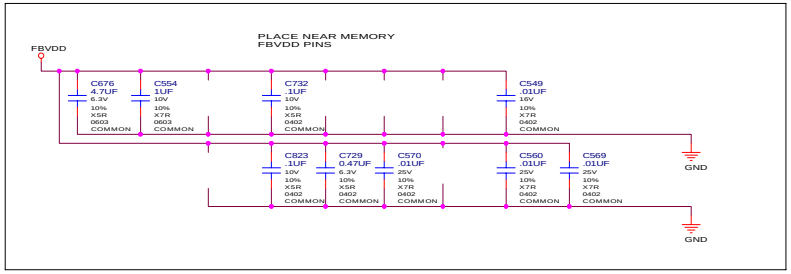

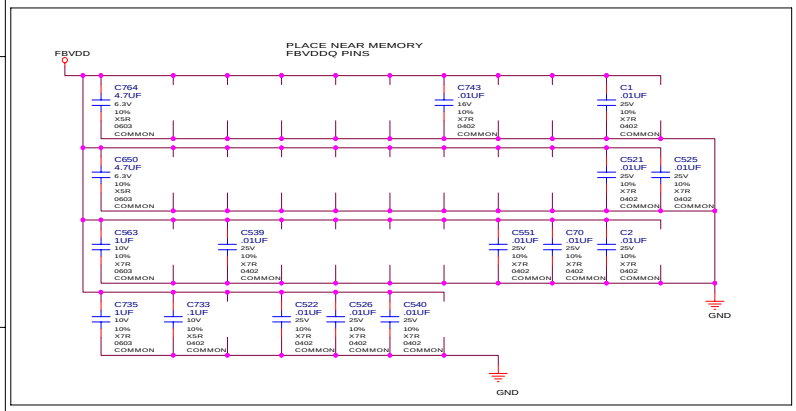

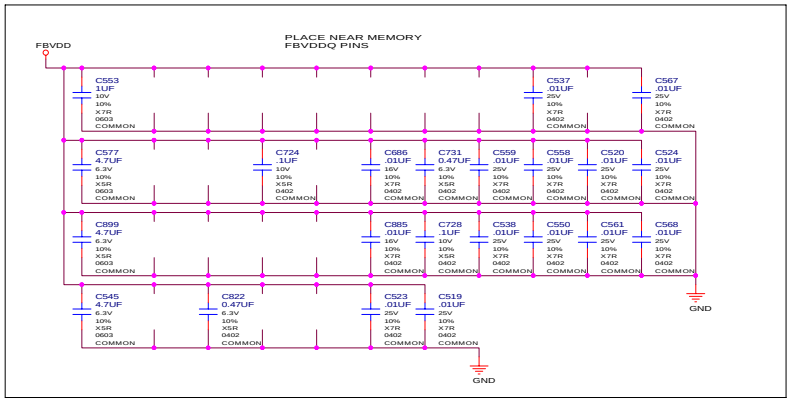

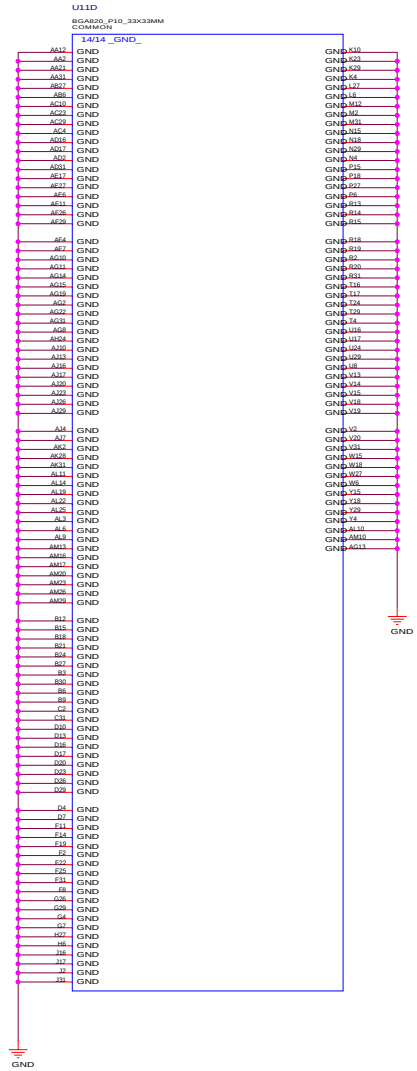

Micro-Star International Co., LTD.	
FBC DECOUPLING	
Size: Custom	Document Number: MS-V069
Rev: 100	
Date: Tuesday, June 27, 2006	Sheet 9 of 25

FRAMEBUFFER: PARTITION C 8Mx32 BGA136 DDR3

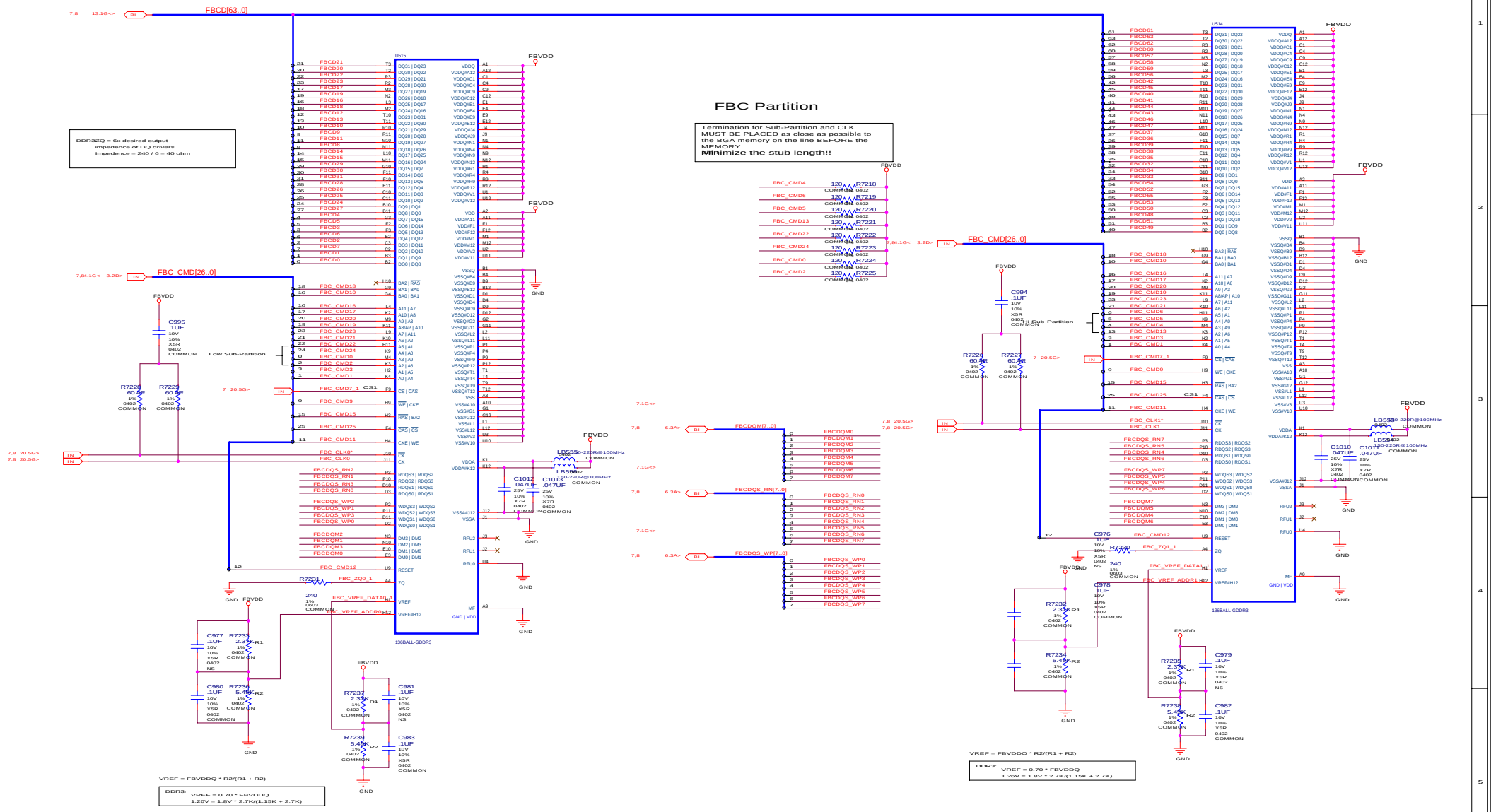

Micro-Star International Co., LTD.	
FB C2	
Size: Custom	Document Number: MS-V069
Rev: 100	
Date: Tuesday, June 27, 2006	Sheet 10 of 25

G3 VIP/MIOB

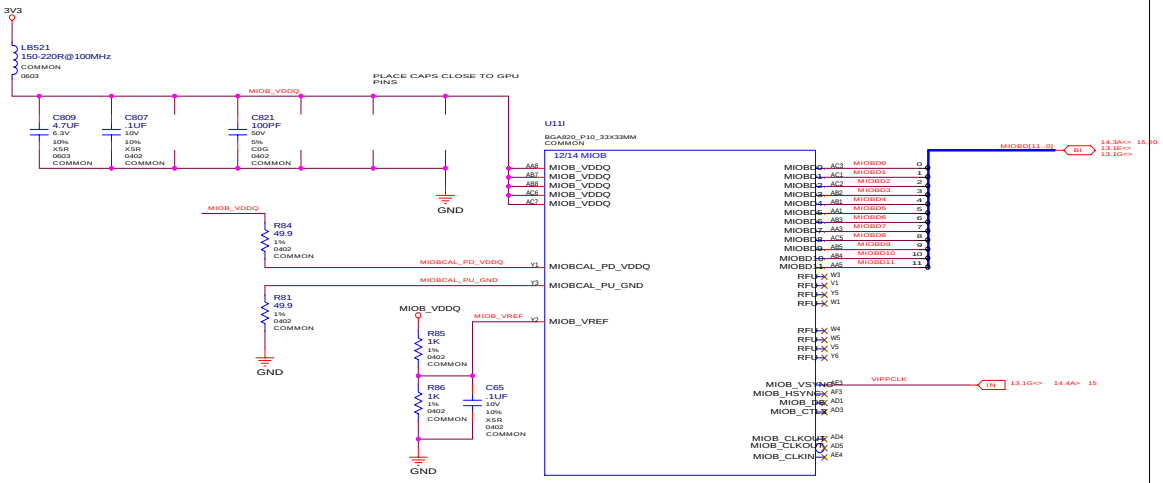

NETNAME | MIN_LINE_WIDTH | SPACING RULE

MIOBD[7..0] | 3.5MIL | 15MIL

G3 MIOA

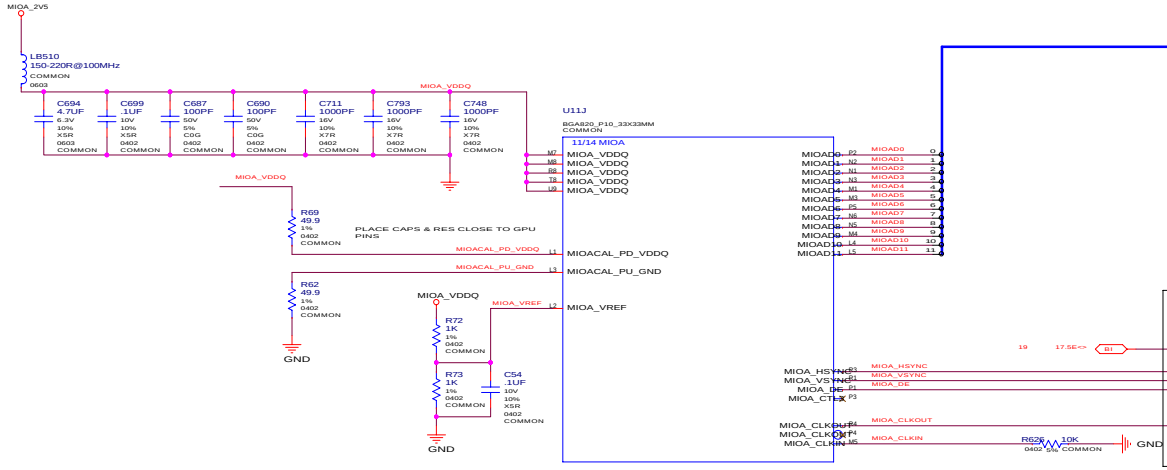

Feature Connector

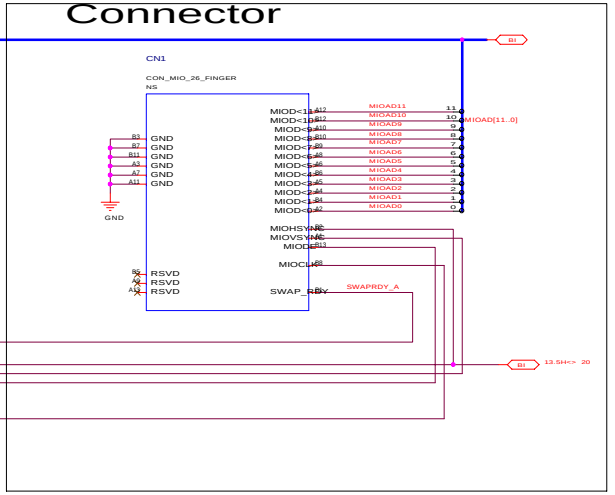

Micro-Star International Co., LTD.			
MIOA/MIOB			
Size: Custom	Document Number: MS-V069	Rev: 100	
Date: Tuesday, June 27, 2006	Sheet 11 of 25		

Secondary Display (DACC), Slim DB15

DACC RGB-FILTER

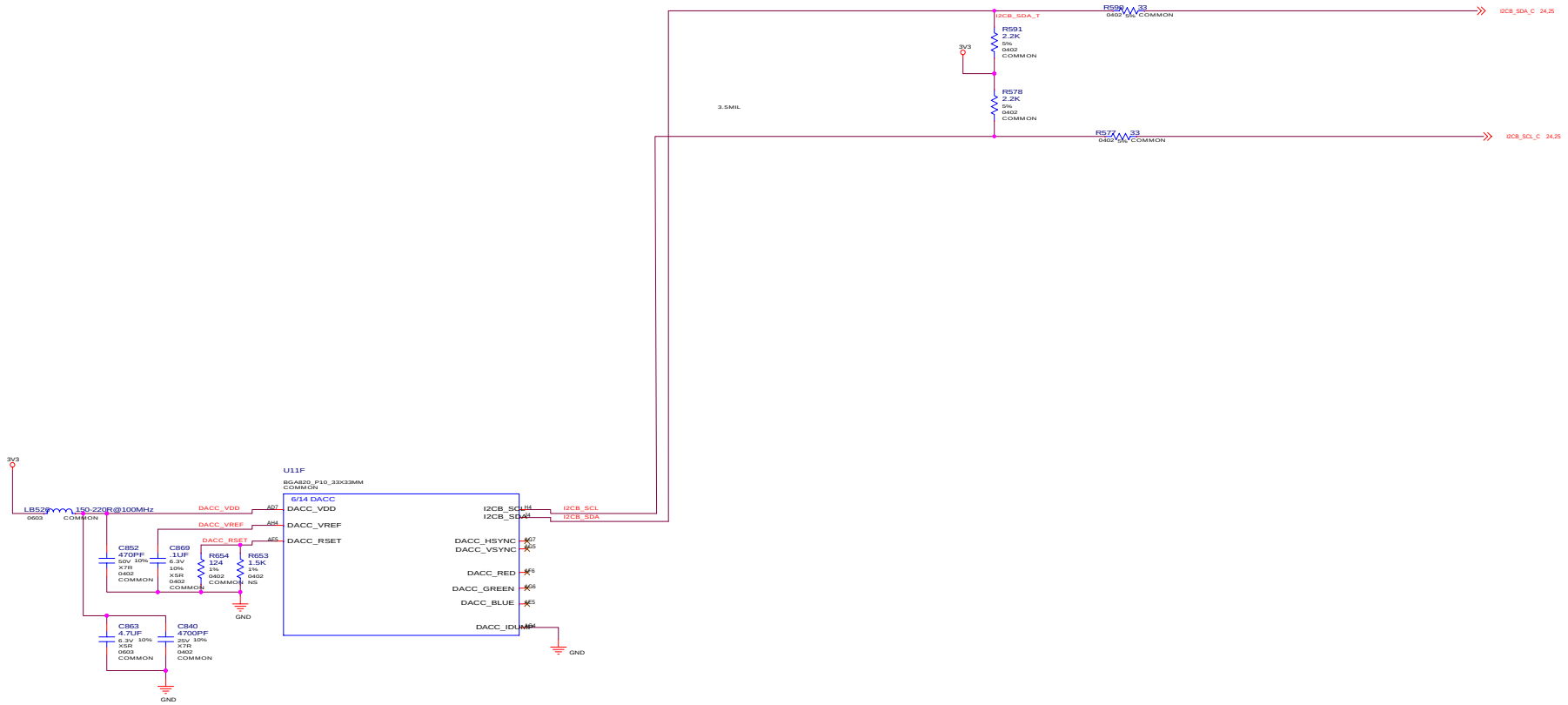

Micro-Star International Co., LTD.		
DACC		
Size: Custom	Document Number: MS-V069	Rev: 100
Date: Tuesday, June 27, 2006	Sheet 12 of 25	

Primary Display (DACA), Slim DB15

DACA
RGB-FILTER

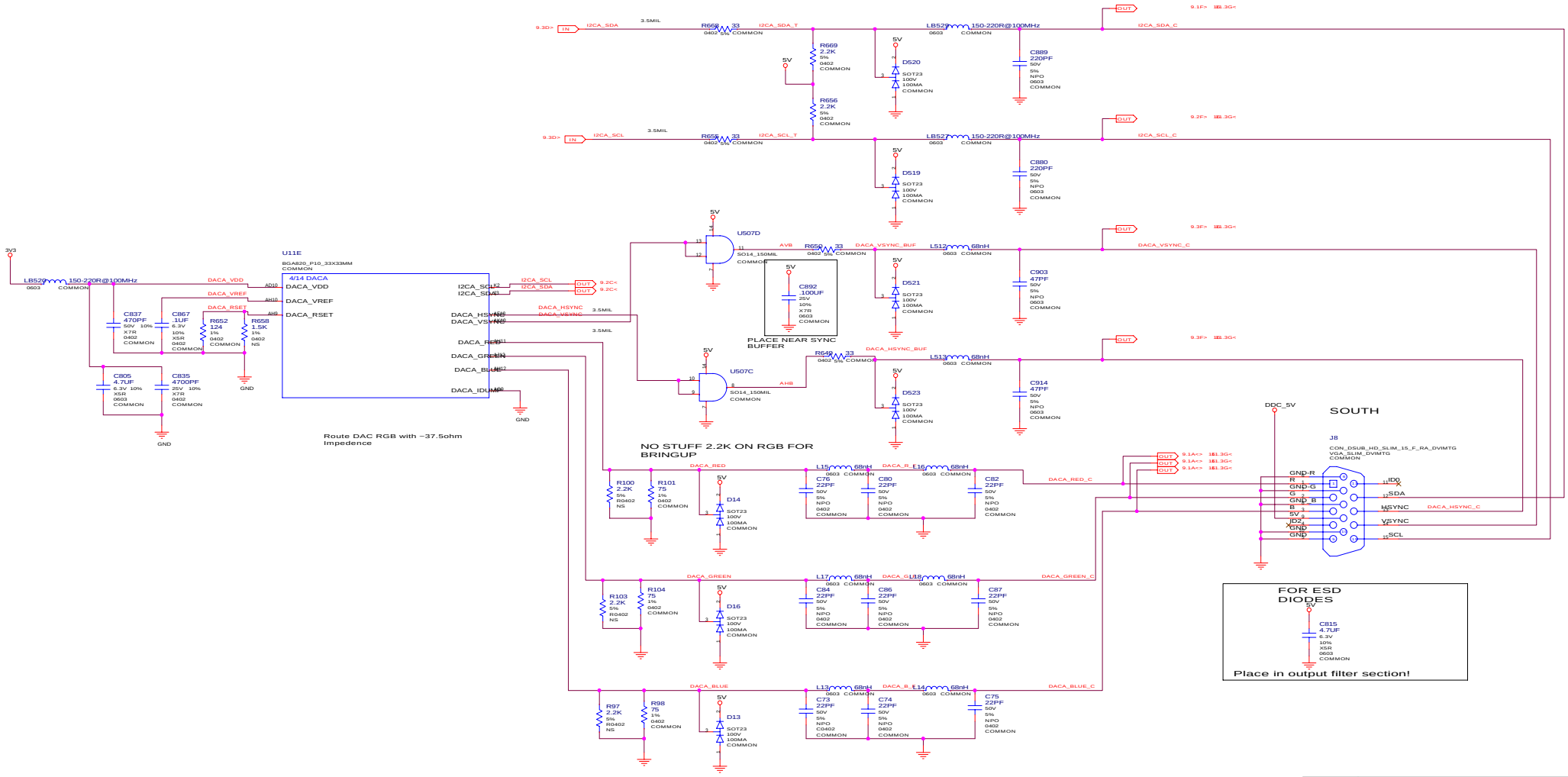

Micro-Star International Co., LTD.	
DACA	
Size: Custom	Document Number: MS-V069
Rev: 100	
Date: Tuesday, June 27, 2006	Sheet 13 of 25

DACB .. MiniDIN VIDEO IN/OUT CONNECTOR /STEREO GLASSES

FILTER NOTES:

SD: USE L=1.8UH

HD: USE L=?

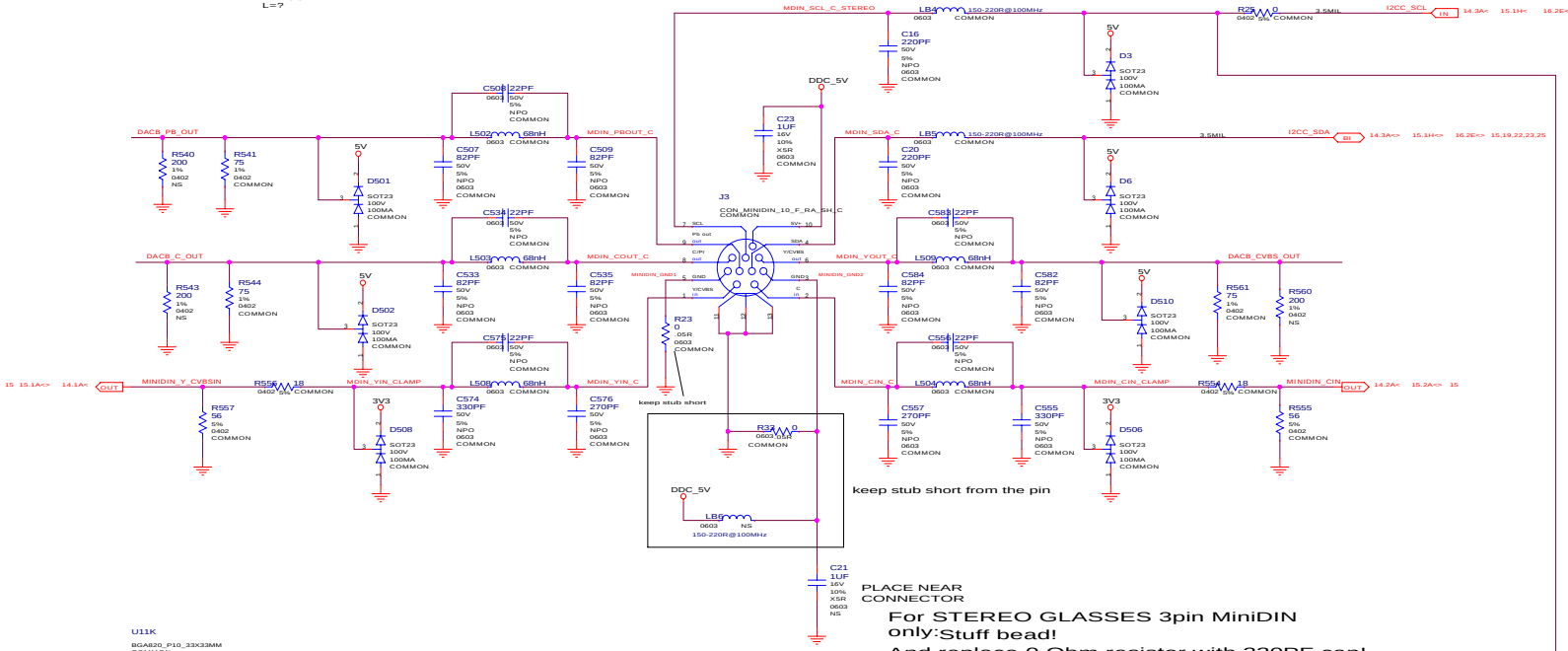

For STEREO GLASSES 3pin MiniDIN only:Stuff bead!
And replace 0 Ohm resistor with 220PF cap!

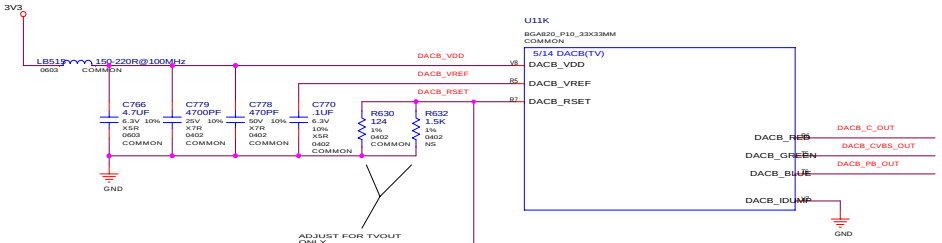

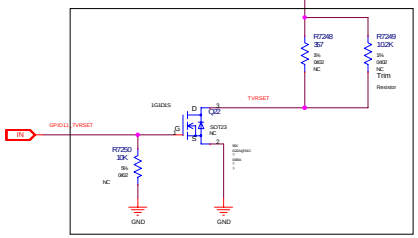

NC for G73

STEREO GLASSES BUFFER

Place close to MiniDIN connector!

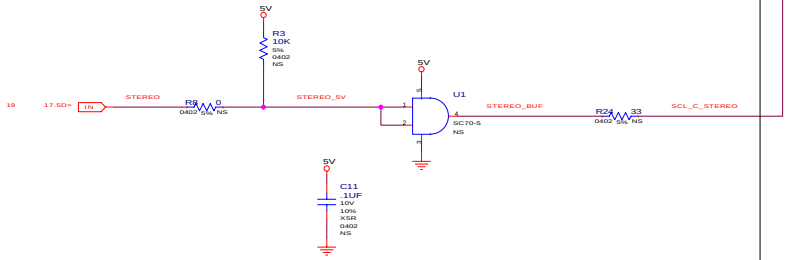

FOR DEBUG PURPOSES ONLY .. DEFAULT IS NO STUFF

Micro-Star International Co., LTD.		
DACB		
Size: Custom	Document Number: MS-V069	Rev: 100
Date: Tuesday, June 27, 2006	Sheet 14 of 25	

PHILIPS
VIDEO
CAPTURE

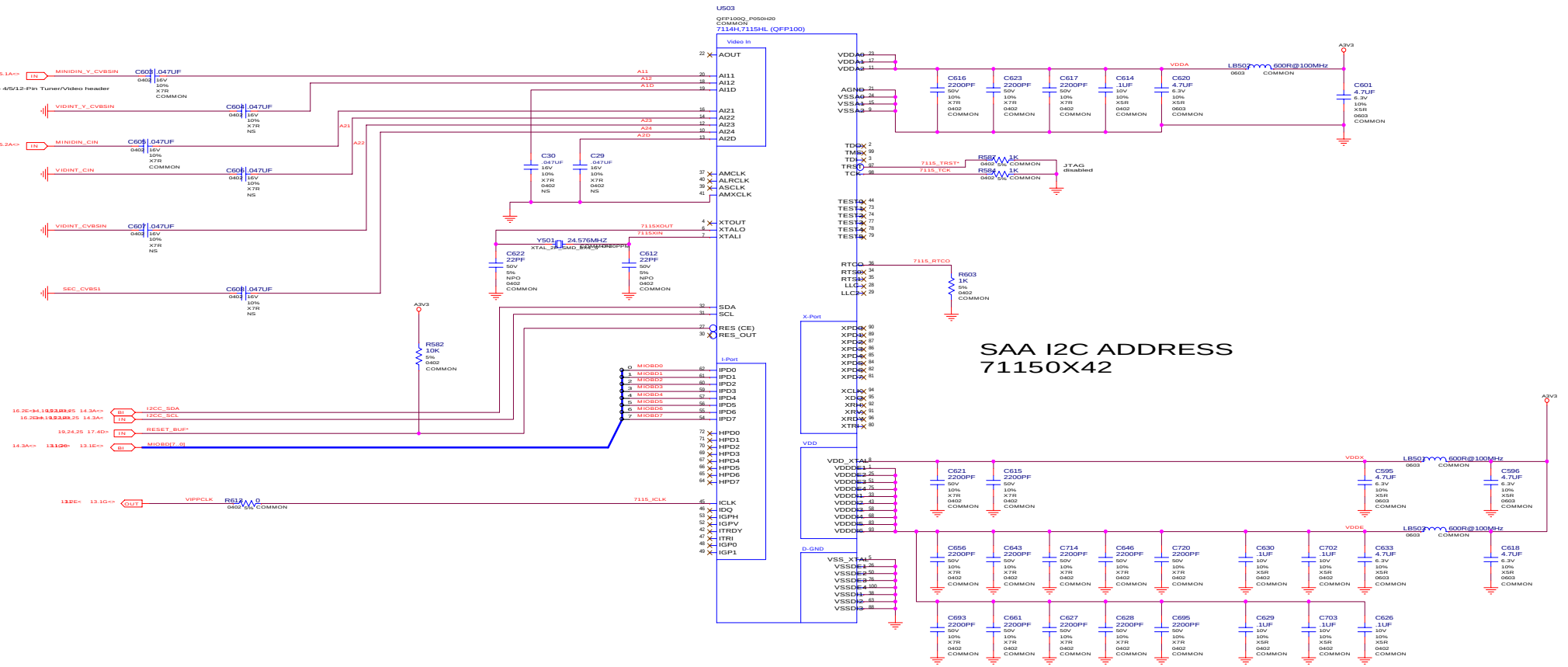

Micro-Star International Co., LTD.			
VIDEO CAPTURE			
Size: Custom	Document Number: MS-V069		Rev: 100
Date: Tuesday, June 27, 2006	Sheet 15 of 25		

INTERNAL TMDS .. LINK A & B

G73 - UNSTUFF PU's

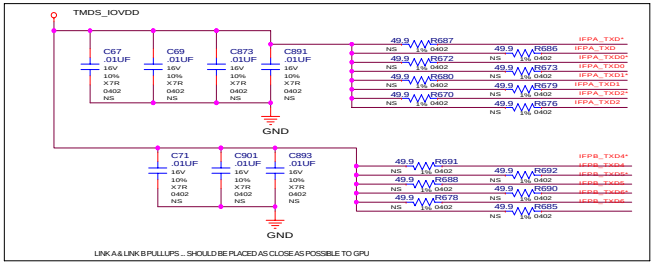

NOTE: GPU HAS ON DIE PULL UPS ON TMDS LINES .. EXTERNAL PULLUPS ADDED (FOR CYA) IN CASE ON-DIE CURRENT DRAW IS EXCESSIVE

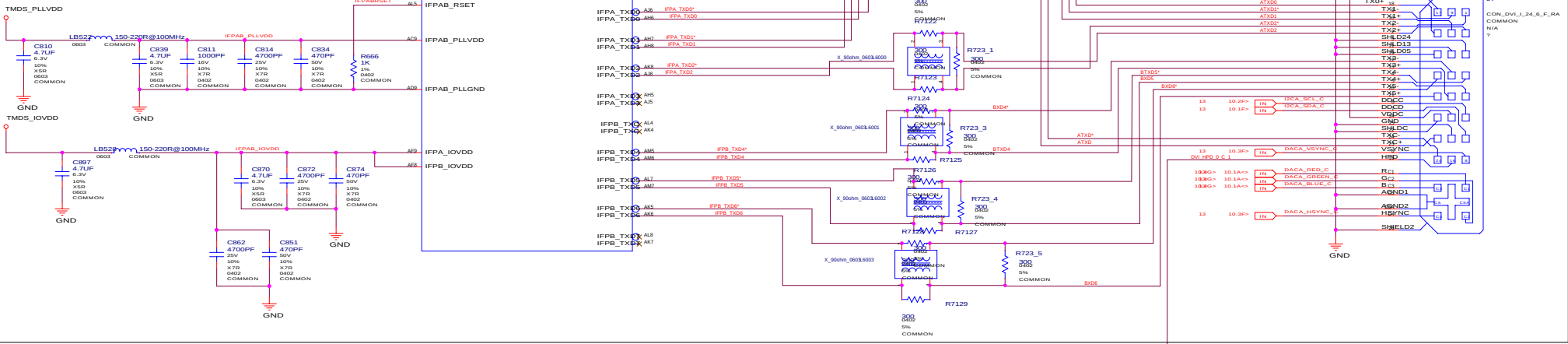

Hotplug Detection

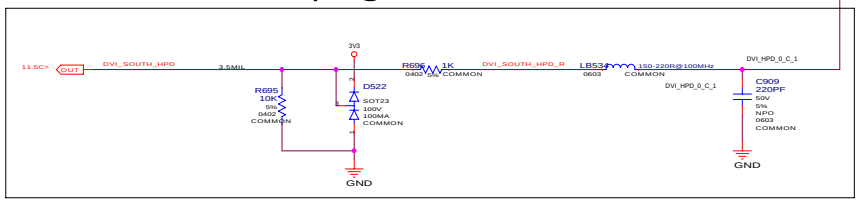

Micro-Star International Co., LTD.		
TMDS LINK A & B		
Size: Custom	Document Number: MS-V069	Rev: 100
Date: Tuesday, June 27, 2006	Sheet 16 of 25	

INTERNAL TMDS
.. LINK C & D

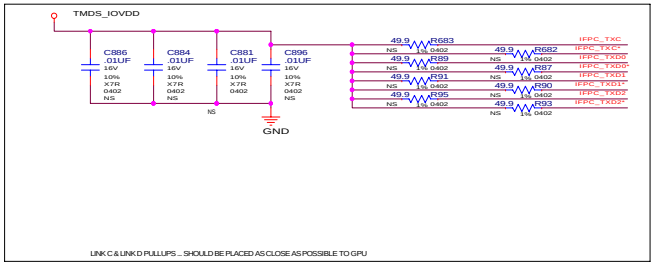

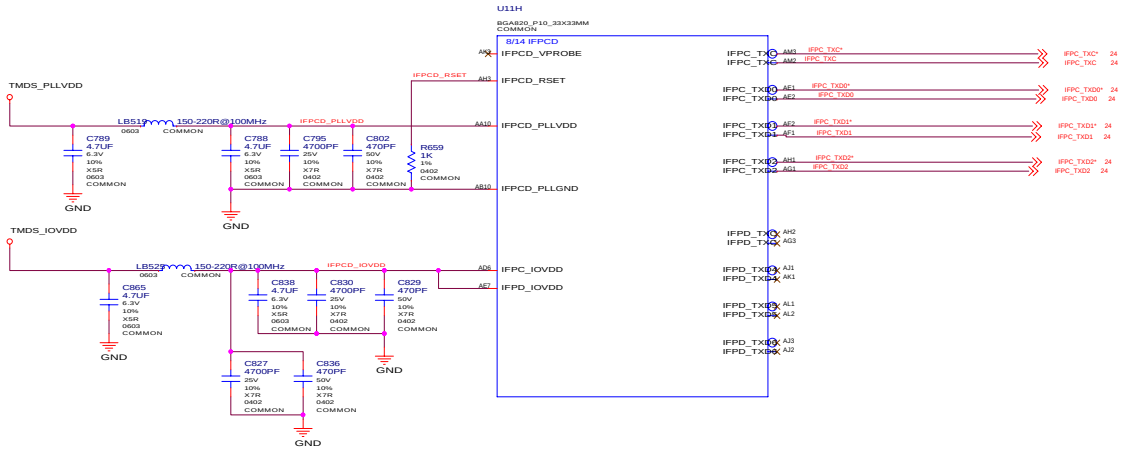

Micro-Star International Co., LTD.	
TMDS LINK C & D	
Size: Custom	Document Number: MS-V069
Rev: 100	
Date: Tuesday, June 27, 2006	Sheet 17 of 25

SPDIF IN

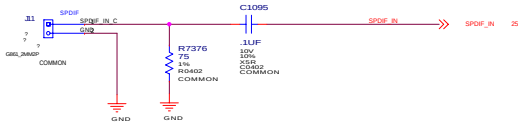

XTAL/PLLVDD

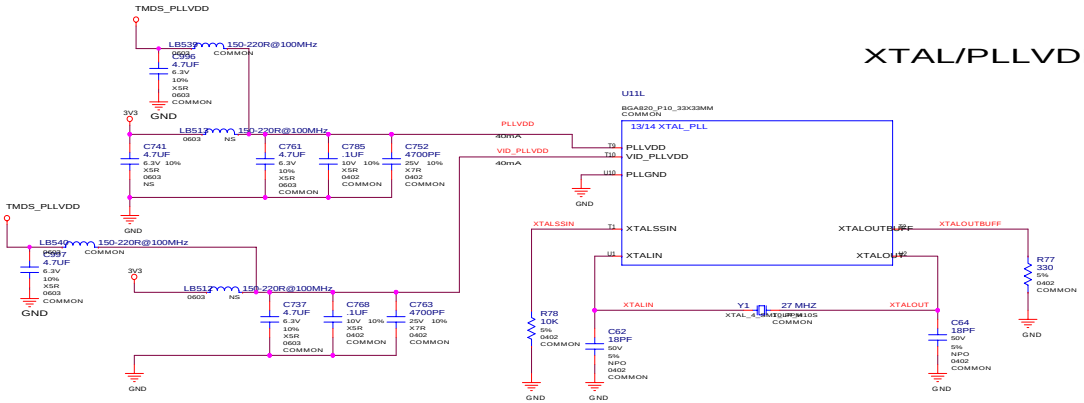

	Micro-Star International Co., LTD.	
	4-Pin Video-In/SPDIF IN	
Size: Custom	Document Number: MS-V069	Rev: 100
Date: Tuesday, June 27, 2006	Sheet 18 of 25	

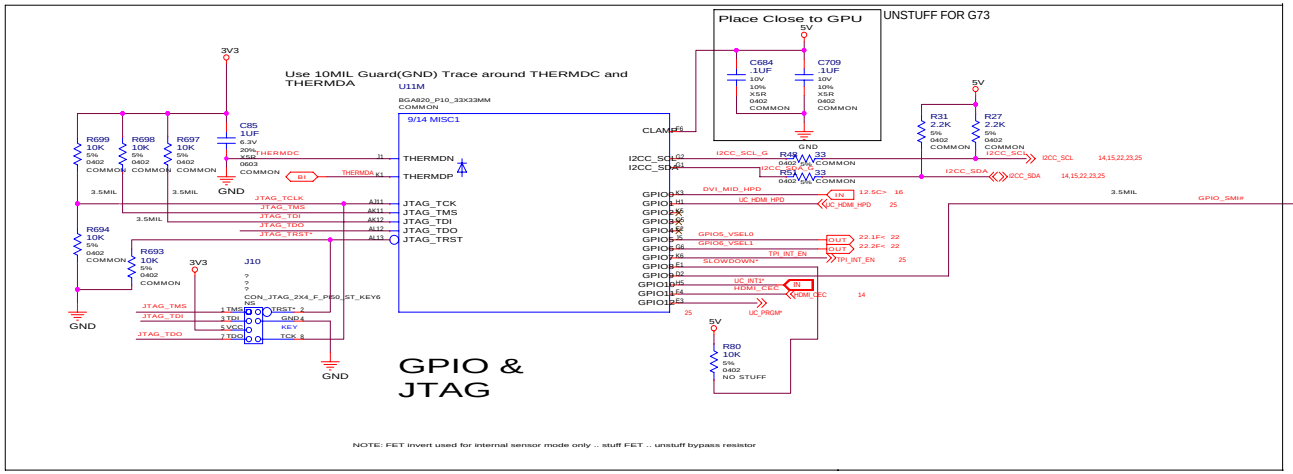

GPIO Assignment Table

GPIO	I/O	FUNCTION
0	IN	DVI MID HOTPLUG DET
1	IN	HDMI hotplug
2	IN	RESERVED
3	IN	RESERVED
4	IN	TUNER IRQ
5	OUT	NVVDD VOLTAGE SELECT 0
6	OUT	NVVDD VOLTAGE SELECT 1
7	Out	TPI INTERRUPT ENABLE
8	IN	RESERVED
9	OUT	PWM FAN
10	IN	INT from Sil1930 TVRSET
11	IN	TVRSET
12	IN	uC PROGRAMMING CONTROL

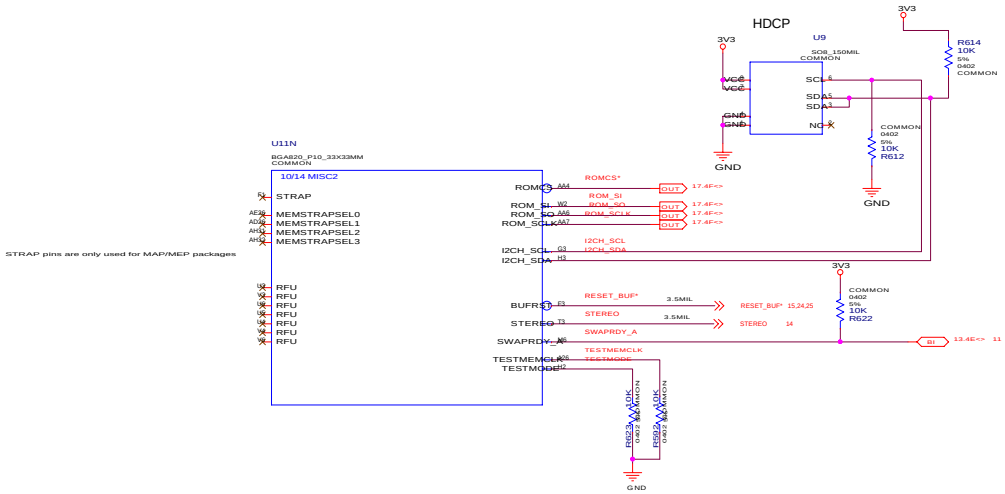

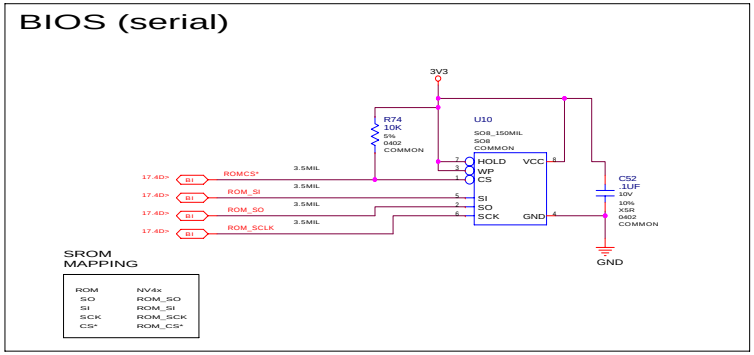

Micro-Star International Co., LTD.	
GPIO/ROM/HDCP ROM	
Size: Custom	Document Number: MS-V069
Rev: 100	
Date: Tuesday, June 27, 2006	Sheet 19 of 25

BIOS, Straps, Misc

Straps

Assembly: BIOS

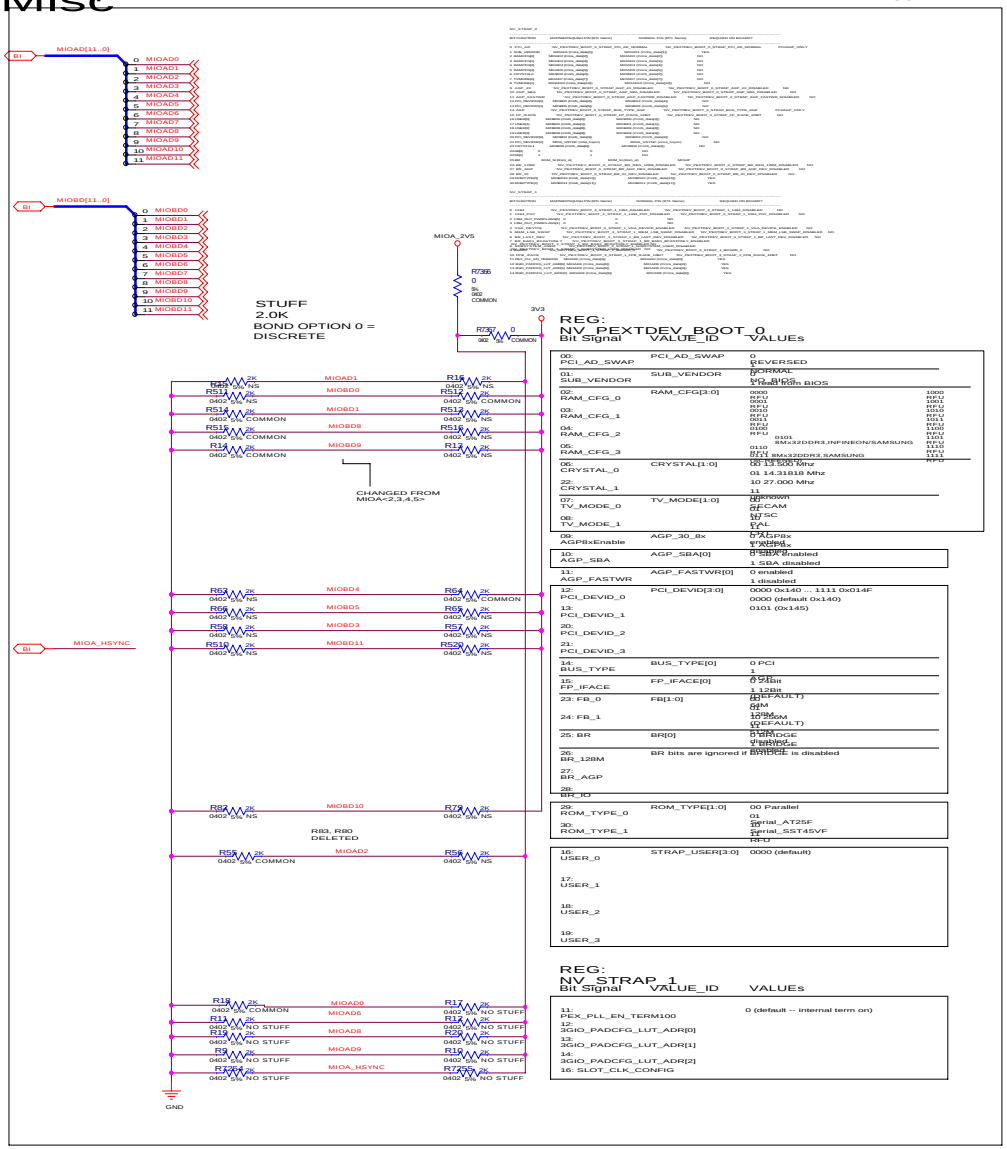

Mechanical parts

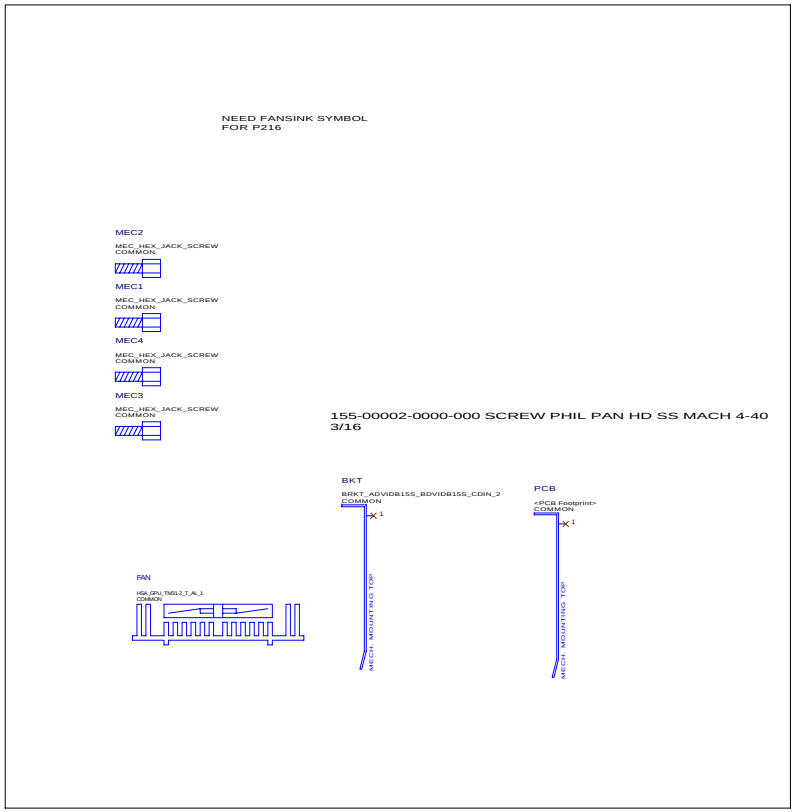

Micro-Star International Co., LTD.			
Straps/Mechanical			
Size: Custom	Document Number: MS-V069		Rev: 100
Date: Tuesday, June 27, 2006		Sheet 20 of 25	

Power Supply TMDS/A3V3

DDC 5V

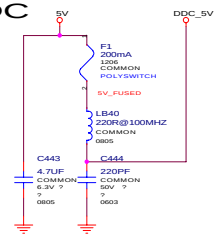

POWER_DDC5V

300mA only

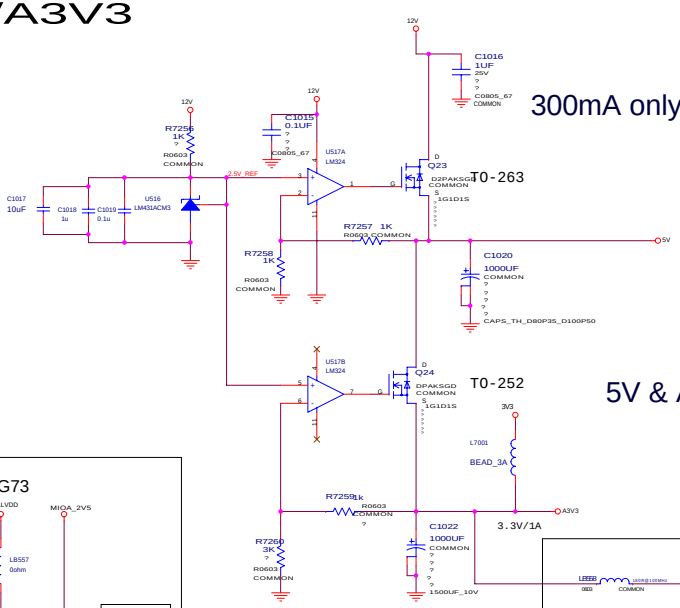

5V & A3V3

PEX1V2

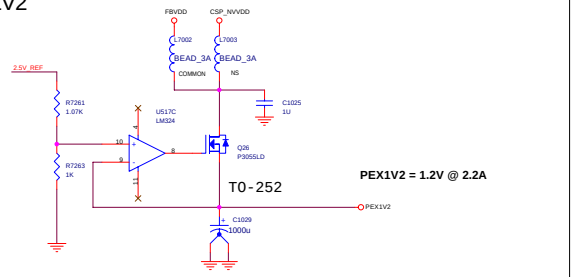

PEX1V2 = 1.2V @ 2.2A

TMDS AB/CD PLL Supply

Non-use for G73

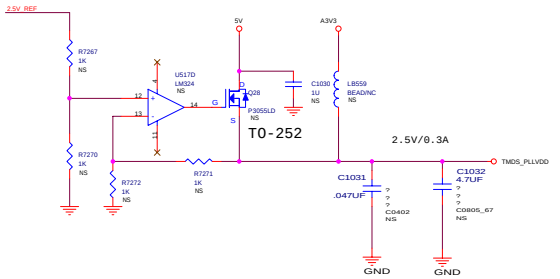

MIOA_VDDQ

Use for G73

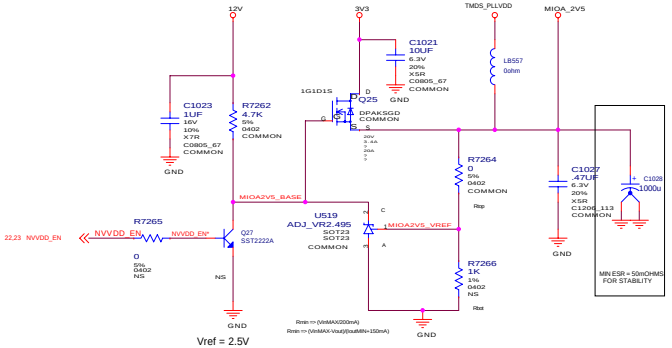

Vref = 2.5V

Vout = 2.495(1+Rtop/Rbot) + (Iref + Rtop)

For Vout = Vref (Rtop = 0ohm, Rbot = NO STUFF)

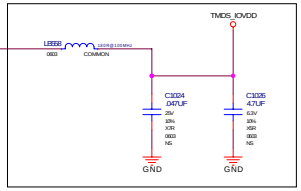

No Stuff

1.8V 320mA

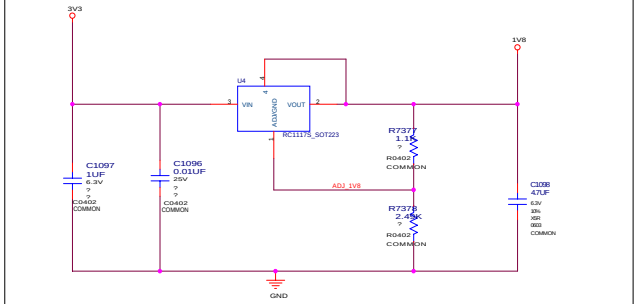

TMDS IO SUPPLY WITH BACKDRIVE PROTECTION

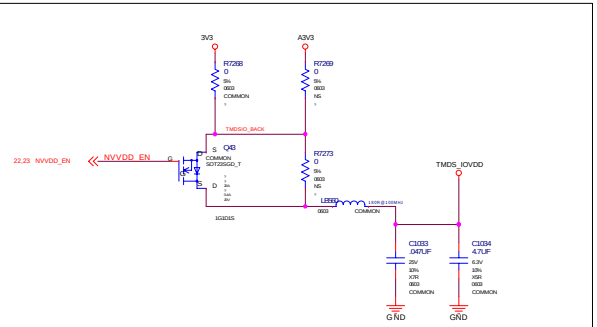

Micro-Star International Co., LTD.			
Linear Power			
Size: Custom	Document Number: MS-V069		Rev: 100
Date: Wednesday, June 28, 2006		Sheet 21 of 25	

NVVDD with MS-11

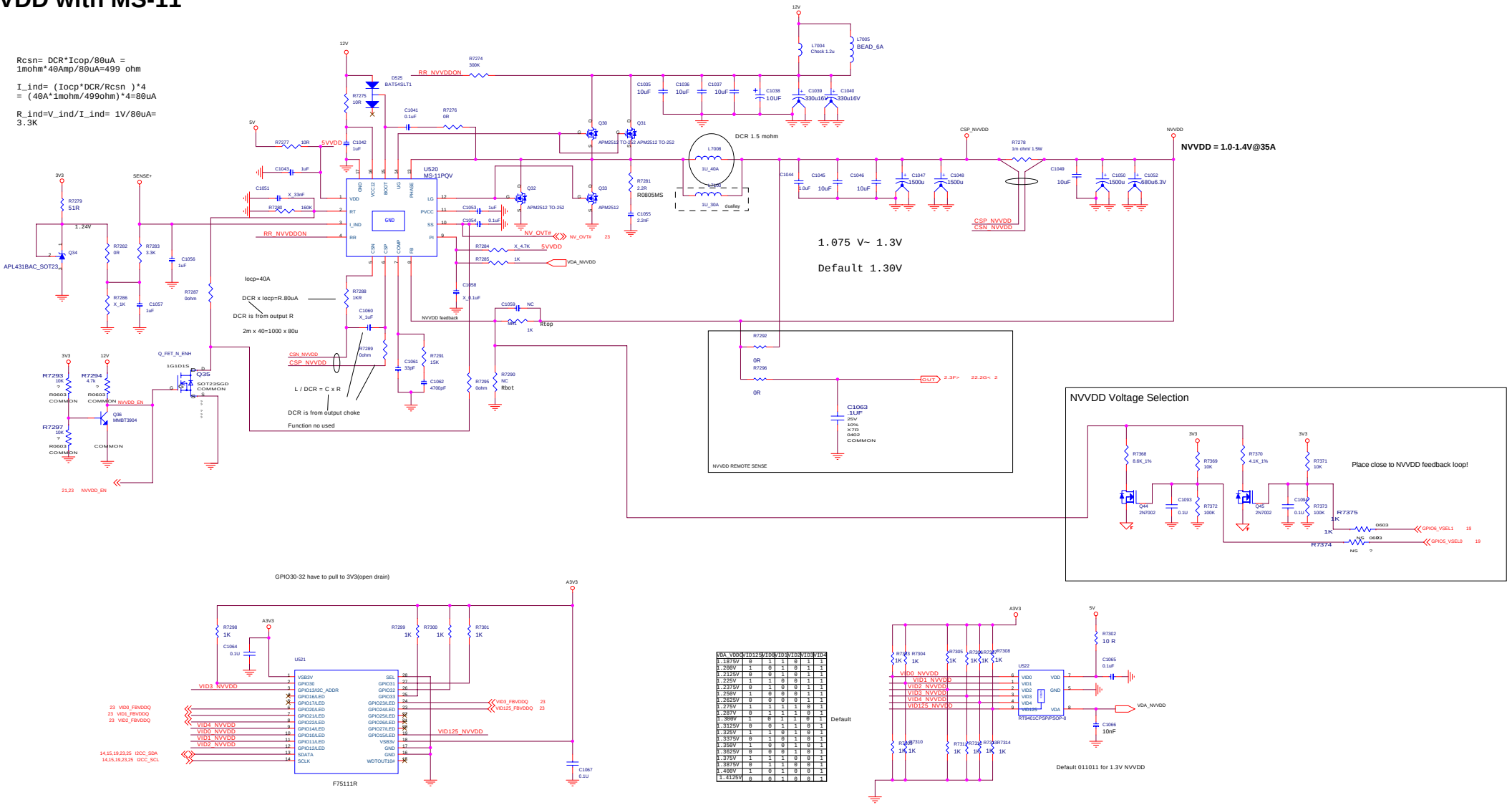

VDA_VDDQ	VID125	VID4	VID3	VID2	VID1	VID0
1.1875V	0	1	1	0	1	1
1.200V	1	0	1	0	1	1
1.2125V	0	0	1	0	1	1
1.225V	1	1	0	0	1	1
1.2375V	0	1	0	0	1	1
1.250V	1	0	0	0	1	1
1.2625V	0	0	0	0	1	1
1.275V	1	1	1	1	0	1
1.287V	0	1	1	1	0	1
1.300V	1	0	1	1	0	1
1.3125V	0	0	1	1	0	1
1.325V	1	1	0	1	0	1
1.3375V	0	1	0	1	0	1
1.350V	1	0	0	1	0	1
1.3625V	0	0	0	1	0	1
1.375V	1	1	1	0	0	1
1.3875V	0	1	1	0	0	1
1.400V	1	0	1	0	0	1
1.4125V	0	0	1	0	0	1

Default

NVVDD_ GPIO:10~15

FBVDDQ_ GPIO:20~24

DACA_ RESET---GPIO:25~28

DACC_ RESET---GPIO:30~32

NVVDD 1.33V default 010101

Micro-Star International Co., LTD.			
NVVDD with MS-11			
Size: Custom	Document Number: MS-V069		Rev: 0A
Date: Tuesday, June 27, 2006		Sheet 22 of 25	

FBVDD with MS-11

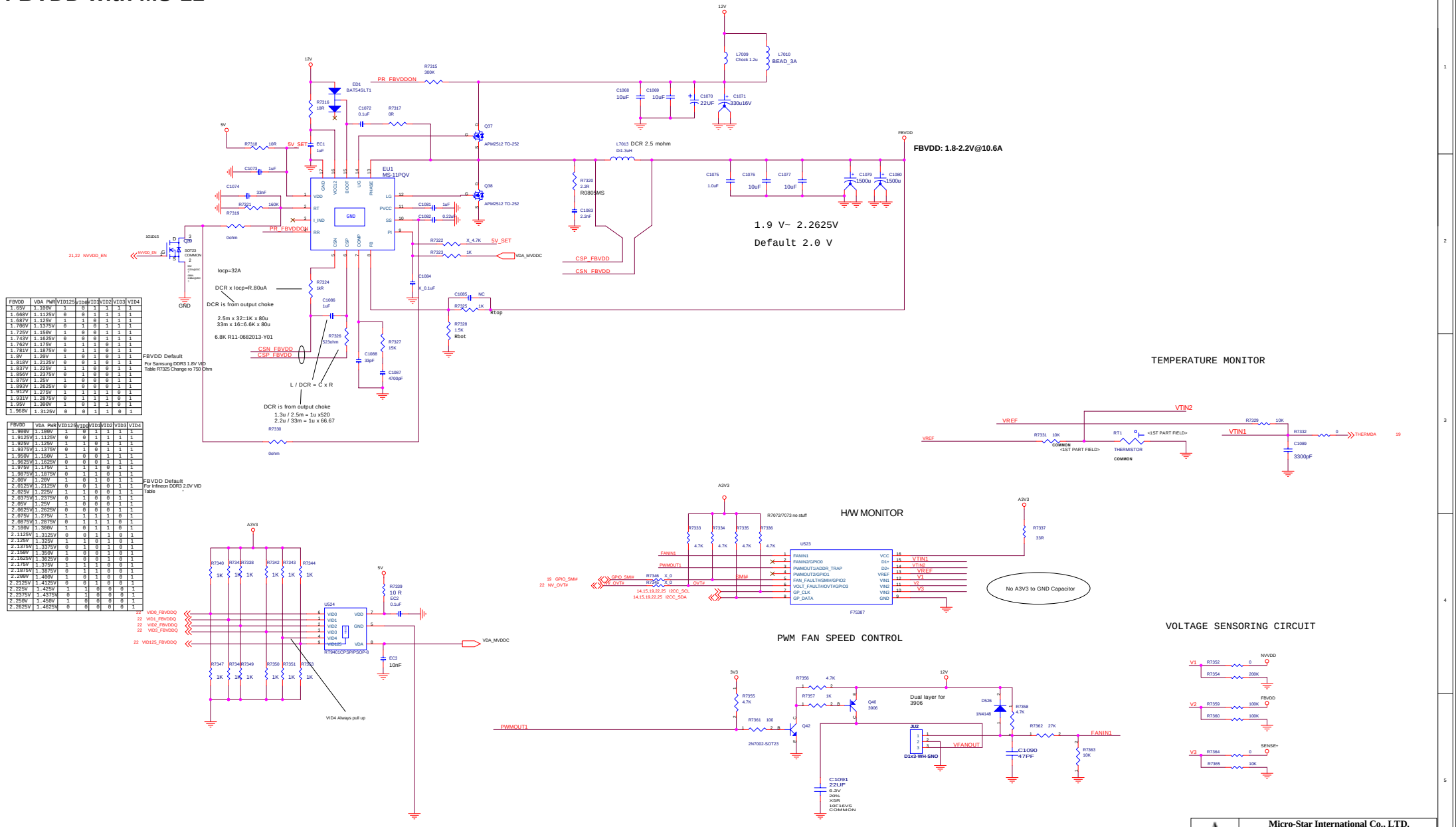

FBVDD	VDA_PWR	VID125	VID0	VID1	VID2	VID3	VID4
1.65V	1.100V	1	0	1	1	1	1
1.668V	1.1125V	0	0	1	1	1	1
1.687V	1.125V	1	1	0	1	1	1
1.706V	1.1375V	0	1	0	1	1	1
1.725V	1.150V	1	0	0	1	1	1
1.743V	1.1625V	0	0	0	1	1	1
1.762V	1.175V	1	1	1	0	1	1
1.781V	1.1875V	0	1	1	0	1	1
1.8V	1.20V	1	0	1	0	1	1
1.818V	1.2125V	0	0	1	0	1	1
1.837V	1.225V	1	1	0	0	1	1
1.856V	1.2375V	0	1	0	0	1	1
1.875V	1.25V	1	0	0	0	1	1
1.893V	1.2625V	0	0	0	0	1	1
1.912V	1.275V	1	1	1	1	0	1
1.931V	1.2875V	0	1	1	1	0	1
1.95V	1.300V	1	0	1	1	0	1
1.968V	1.3125V	0	0	1	1	0	1

FBVDD	VDA_PWR	VID125	VID0	VID1	VID2	VID3	VID4
1.900V	1.100V	1	0	1	1	1	1
1.9125V	1.1125V	0	0	1	1	1	1
1.925V	1.125V	1	1	0	1	1	1
1.9375V	1.1375V	0	1	0	1	1	1
1.950V	1.150V	1	0	0	1	1	1
1.9625V	1.1625V	0	0	0	1	1	1
1.975V	1.175V	1	1	1	0	1	1
1.9875V	1.1875V	0	1	1	0	1	1
2.00V	1.20V	1	0	1	0	1	1
2.0125V	1.2125V	0	0	1	0	1	1
2.025V	1.225V	1	1	0	0	1	1
2.0375V	1.2375V	0	1	0	0	1	1
2.05V	1.25V	1	0	0	0	1	1
2.0625V	1.2625V	0	0	0	0	1	1
2.075V	1.275V	1	1	1	1	0	1
2.0875V	1.2875V	0	1	1	1	0	1
2.100V	1.300V	1	0	1	1	0	1
2.1125V	1.3125V	0	0	1	1	0	1
2.125V	1.325V	1	1	0	1	0	1
2.1375V	1.3375V	0	1	0	1	0	1
2.150V	1.350V	1	0	0	1	0	1
2.1625V	1.3625V	0	0	0	1	0	1
2.175V	1.375V	1	1	1	0	0	1
2.1875V	1.3875V	0	1	1	0	0	1
2.200V	1.400V	1	0	1	0	0	1
2.2125V	1.4125V	0	0	1	0	0	1
2.225V	1.425V	1	1	0	0	0	1
2.2375V	1.4375V	0	1	0	0	0	1
2.250V	1.450V	1	0	0	0	0	1
2.2625V	1.4625V	0	0	0	0	0	1

Micro-Star International Co., LTD.	
FBVDD with MS-11	
Size: Custom	Document Number: MS-V069
Rev: 100	
Date: Tuesday, June 27, 2006	Sheet 23 of 25

Hotplug Detection

Capacitance of HDMI_SDA_C & HDMI_SCL_C nets to Power/GND planes must be less than 50pF (try to make it lower)

TMDS AC termination PLACE CLOSE TO THE SII.

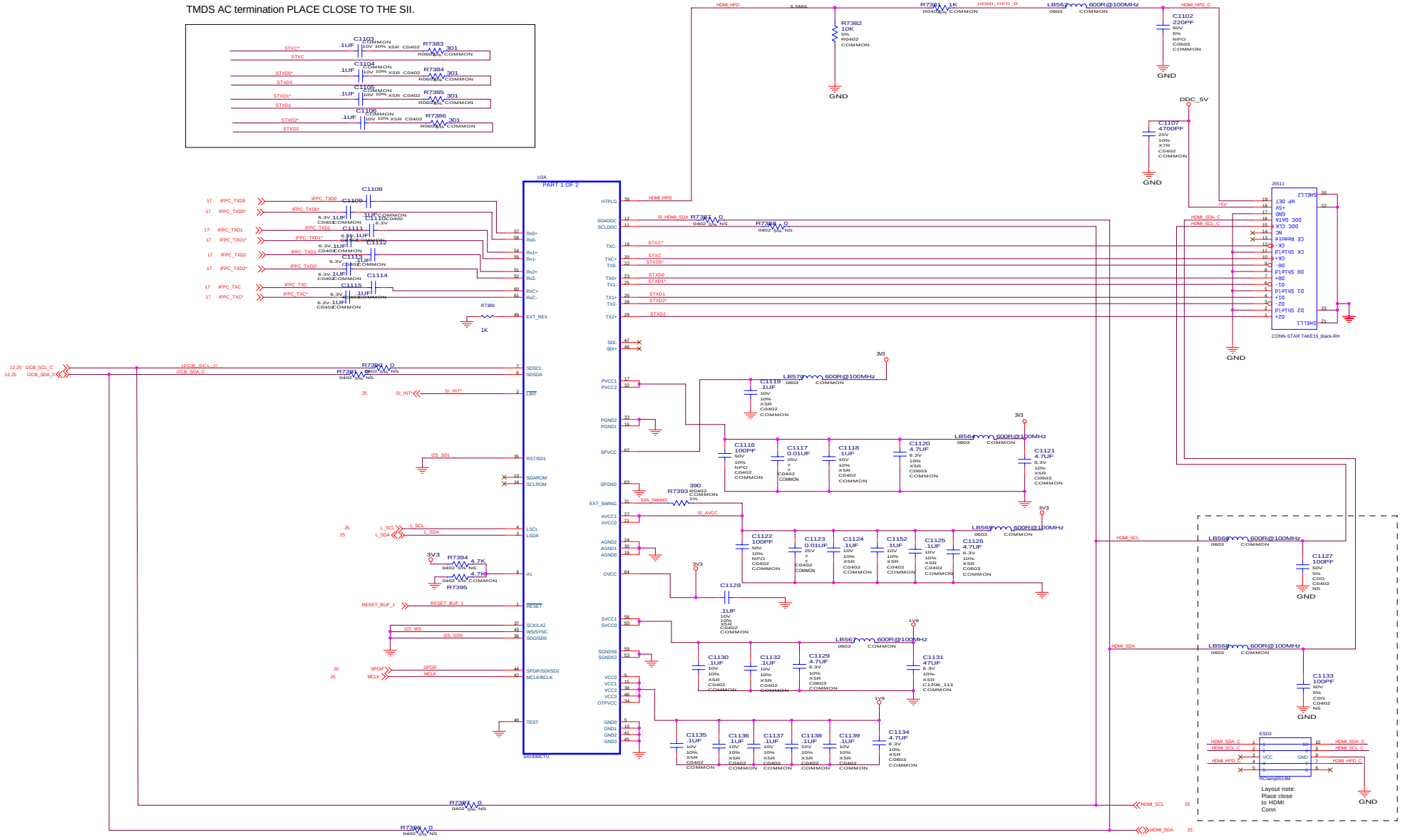

Micro-Star International Co., LTD.	
HDMI LINK Sil 1930	
Size: Custom	Document Number: MS-V069
Rev: 100	
Date: Tuesday, June 27, 2006	Sheet 24 of 25

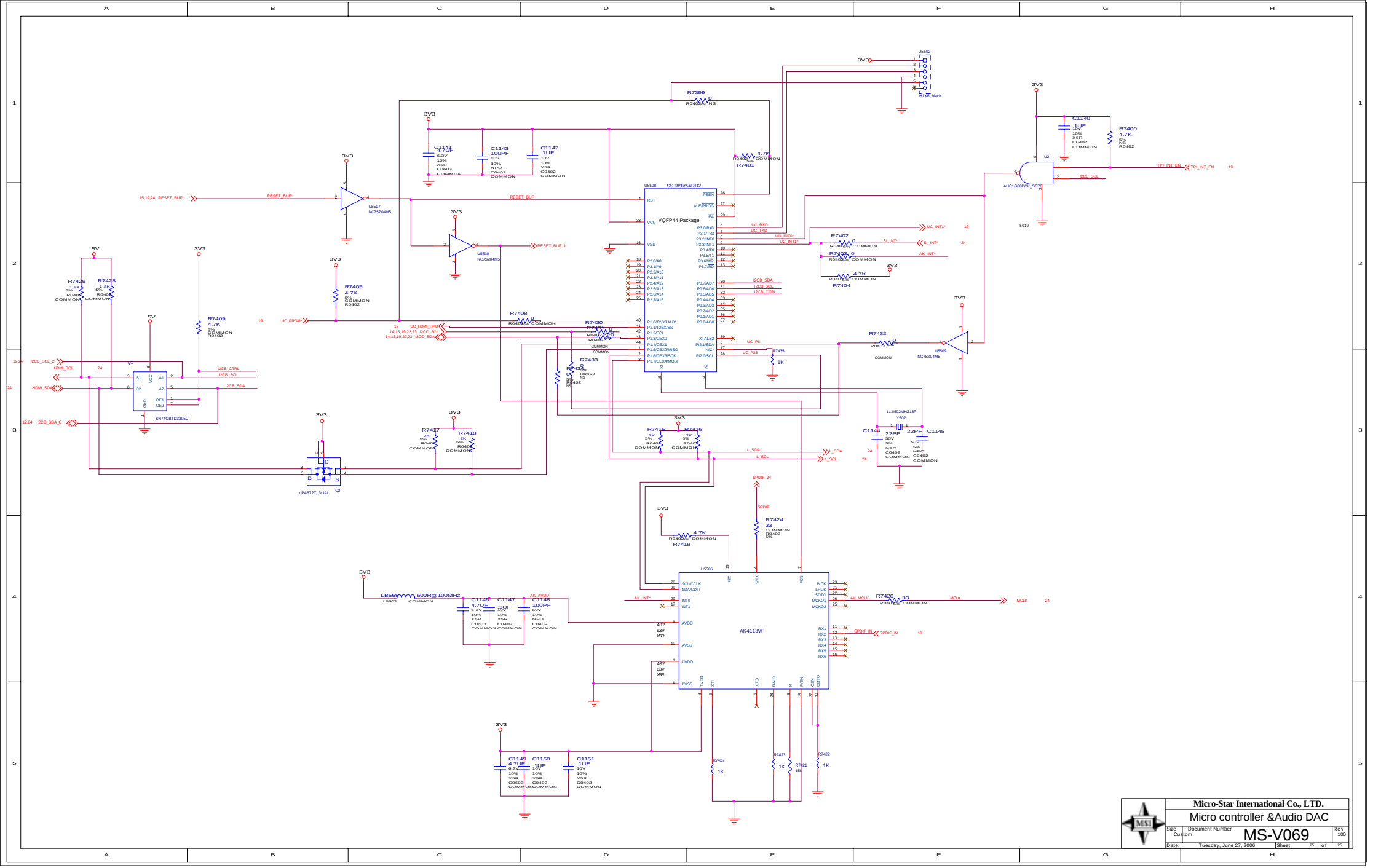

Micro-Star International Co., LTD.

Micro controller &Audio DAC

Size	Document Number	Rev
Custom	MS-V069	100

Date: Tuesday, June 27, 2006 Sheet 25 of 25