R7260X(C582PMI)Repair Guide

JUL/02/2014
Kelly
GTSD

Power flow & power sequence

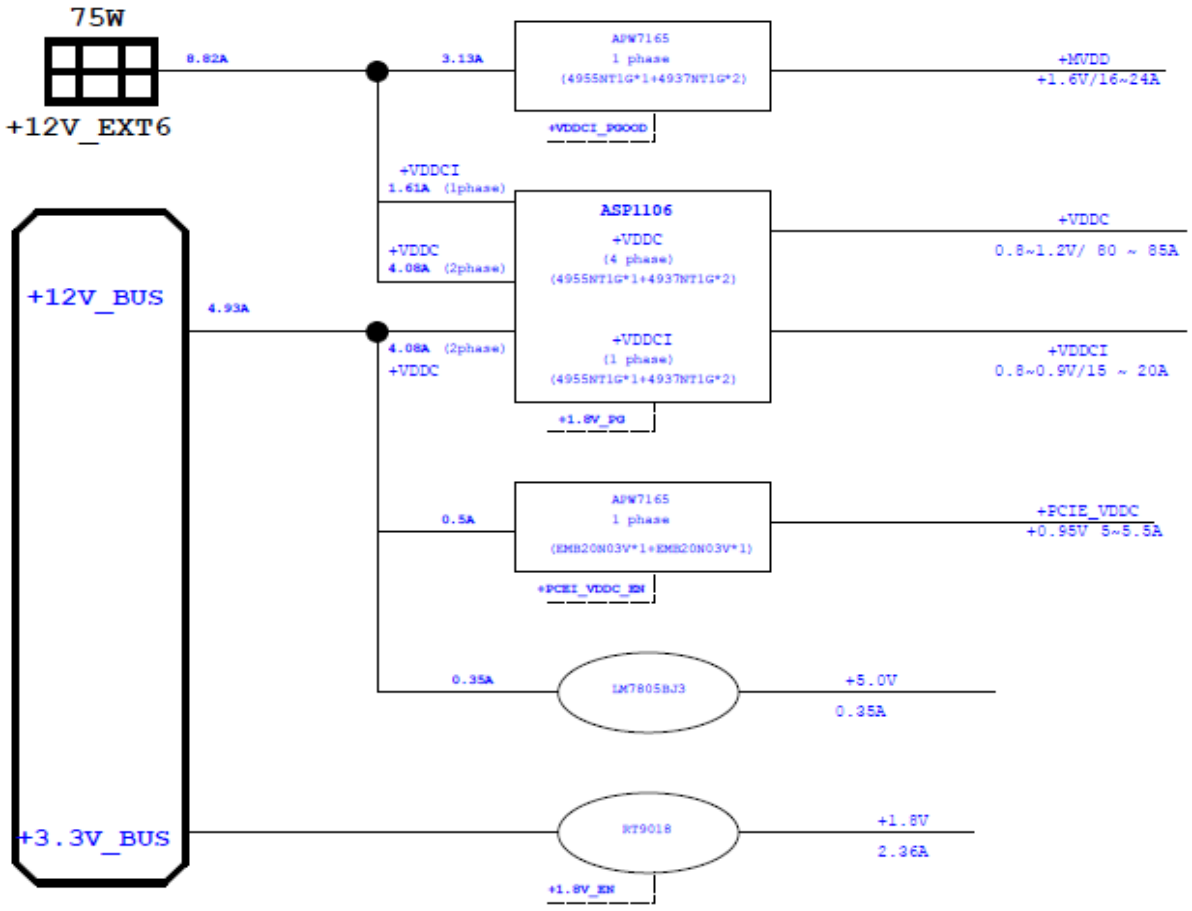

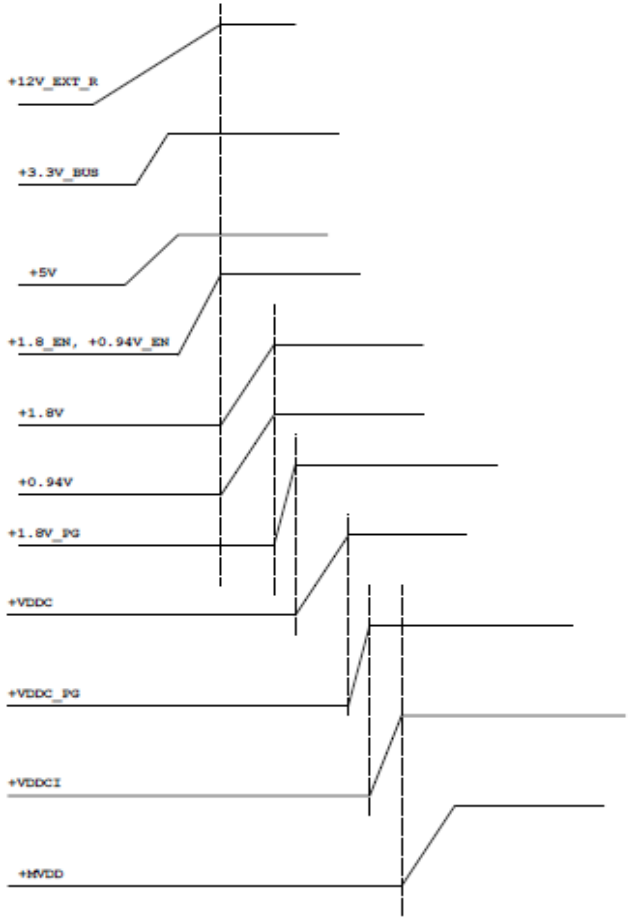

Top side

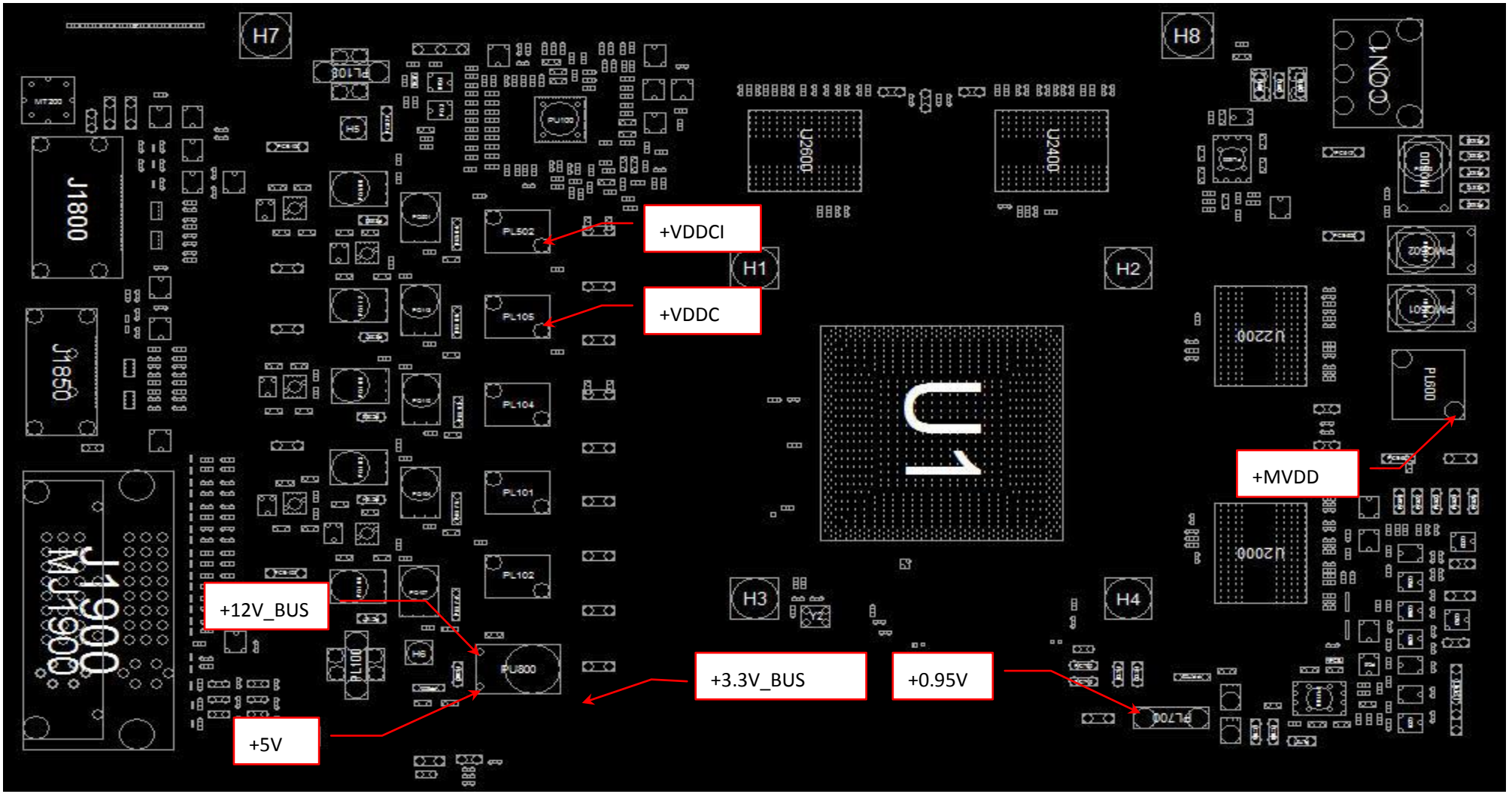

+VDDCI
+VDDC
+MVDD
+12V_BUS
+3.3V_BUS
+0.95V
+5V
H7
H8
H1
H2
H3
H4
J1800
J1850
J1900
U1
U2600
U2400
U2200
U2000
PL502
PL105
PL104
PL101
PL102
PU800
PL100
PL600
PL700
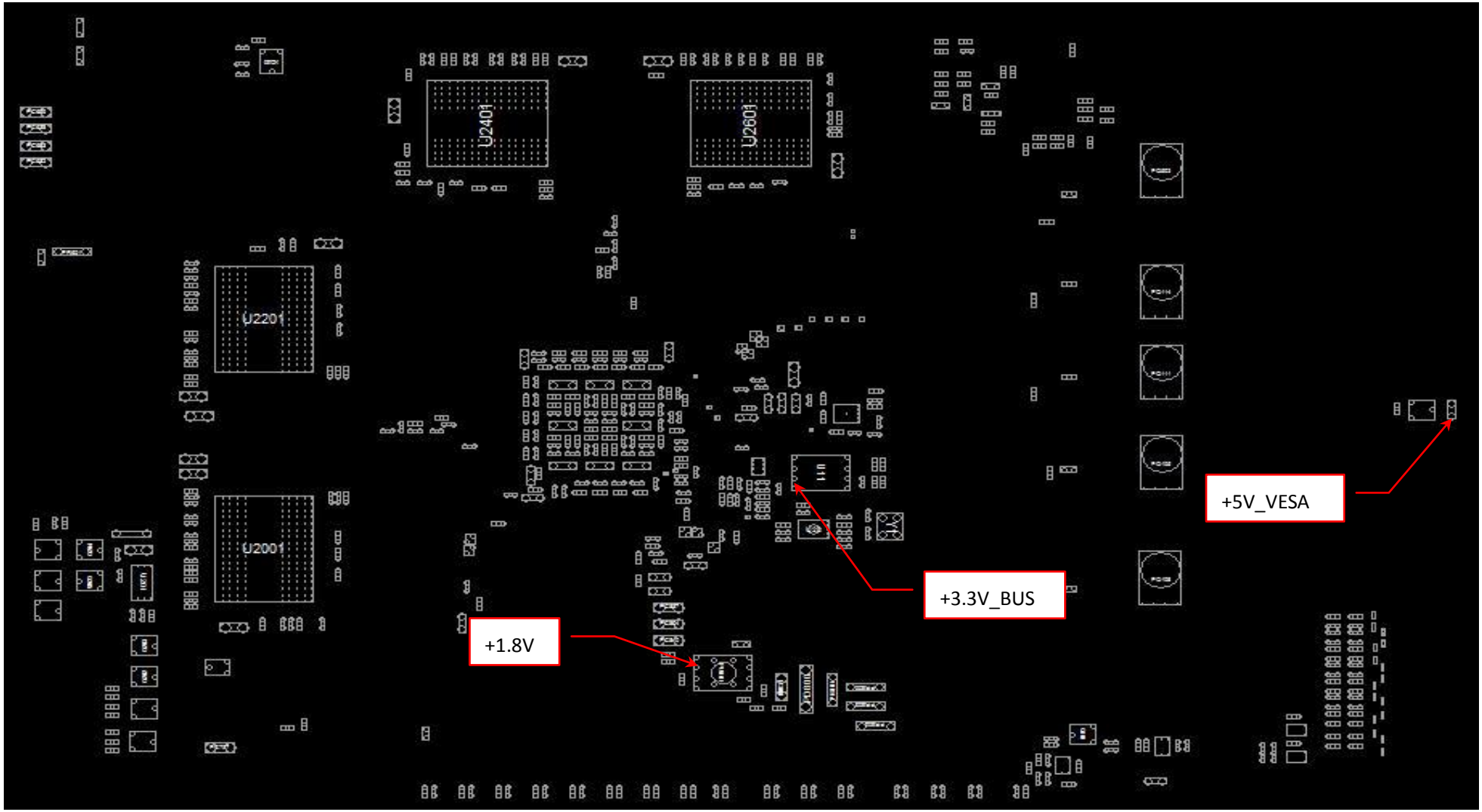
Bottom side