C116-B, NV18B/NV31/NV34, 8MX16DDR, 64MB, VIDEO OUT, VGA

Page Overview

1 C116B PAGE OVERVIEW
2 NV18B AGP Section and AGP connector
3 NV18B FRAME BUFFER Interface
4 MEMORY 64MB, 8Mx16DDR Bits 0..31
5 MEMORY 64MB, 8Mx16DDR Bits 32..63
6 NV18B STRAPPING, I/O Interface & BIOS, FAN CONNECTOR
7 NV18B DACA, DACB output, SYNC amplifier & PLL Section
8 PRIMARY DISPLAY Filter and Connector
9 NV18 TMDS Power, VIDEO OUT CONNECTOR
10 POWER SUPPLY & A3V3 & FBVDDQ & NVVDD & FBVDD
11 MECHANICS

HISTORY:

0B

A. Change R534 from 2.43K_1% to 2.55K_1% (R11-2551T13-Y01), R533 change from 1.05K_1% to 1.18K_1% (R11-1181T13-Y01) to get FBVDDQ=2.528V.
B. Add R591 (2.2 ohm_0603_5%) and C409 (2200p_0603) to reduce VRM noise on L1 pin1.
200. SHORT ALL MEMORY DAMPING RESISTOR AND CHANGE COLOR TO RED.
210. ADD FBAA12 TO SUPPORT 16M*16 MEMORY

1 change all 0402 footprint to 0603.

2.Page 2
a.removeC62,C590,C574,C566,C615,C628,C642,C631,C626,C648,C647,C645,C624,R609,R625
b.add 2 MOSFET for U200 daul-lay

3.Page 3
remove C603,C609,C618,C611,C612,C610,C604,C592,
R768,R770,R772,R774

4.Page 4,5
a.removeC1112,C238,C241,C1115,C250,C1113,
C1114,C228,C230,C1120,C1119,C247,C245,C244,
C1121,C232,C1122
b.removeC1100,C247,C277,C1101,C1102,C286,C264,
C1104,C1106,C280,C281,C299,C1107,C1108,
C269,C270
c.remove memory data all damping(15ohm).
d.Move bypass capacitors(C1161,C1162,C1163,C1164)of memory clock to
close GPU(PAGE3).

5.Page 6
remove U13(BIOS(ALTERNATIVE)),TEMP Sensor
6.Page 7
change Y3 package to DIP

7.Page 8
remove R695,R694,R693,R7,R1,C788,C797,C819,
C806,C787,C796,C805,C818,C786,
C795,C817,C804,L510,L509,L508

8. Page 10
a.remove S_OUT1,AV_OUT1,C789,C809,C790,
C810,C791,C812,L519,L520,L521
b.add 9pin-mini-din

9. Page 11
a.remove ISL6529
b.add mosfet and OP(LM358) for NVVDD,FBVDD,FBVDDQ
c.change C41,C39 to DIP package

0728

change data[48:63) sequence
ddr suport 16*16M

0728

SUPORT NV18B

Micro-Star International Co.,LTD.

MS-8936-A04

Size Custom	Document Number TOP PAGE	Rev A00
Date: Tuesday, September 16, 2003	Sheet 1 of 11	

NV18 AGP SECTION AND AGP CONNECTOR

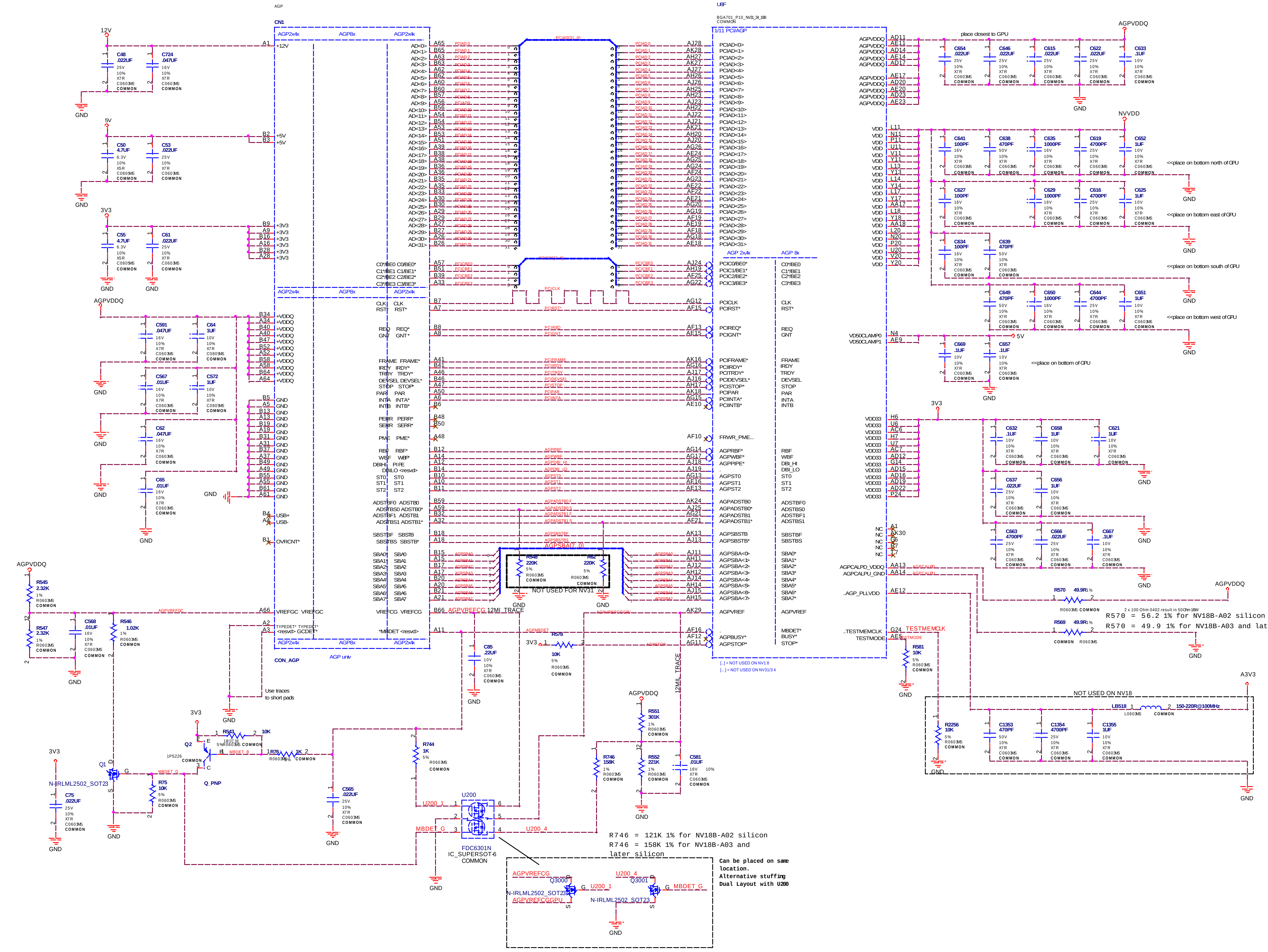
AGP
CN1
AGP2x4x
AGP8x
AGP2x4x
12V
5V
3V3
GND
AGPVDDQ
+12V
+5V
+3V3
+VDDQ
USB+
USB-
OVRCNT*
TYPEDET*
GCDET*
VREFGC
AGPVREFCG
12MIL TRACE
CON_AGP
AGP univ
Use traces to short pads
U8F
BGA701_P10_NV31_34_10B
COMMON
1/11 PCI/AGP
AGP 2x4x
AGP 8x
PCIAD<0>…PCIAD<31>
PCIC/BE0*…PCIC3/BE3*
PCICLK
PCIRST*
PCIREQ*
PCIGNT*
PCIFRAME*
PCIIRDY*
PCITRDY*
PCIDEVSEL*
PCISTOP*
PCIPAR
PCIINTA*
PCIINTB*
FRWR_PME...
AGPRBF*
AGPWBF*
AGPPIPE*
AGPST0
AGPST1
AGPST2
AGPADSTB0
AGPADSTB0*
AGPADSTB1
AGPADSTB1*
AGPSBSTB
AGPSBSTB*
AGPSBA<0>…AGPSBA<7>
AGPVREF
AGPBUSY*
AGPSTOP*
AGPCALPD_VDDQ
AGPCALPU_GND
AGP_PLLVDD
TESTMEMCLK
TESTMODE
VDD50CLAMP0
VDD50CLAMP1
VDD
VDD33
NVDD
NC
[...] = NOT USED ON NV18
[...] = NOT USED ON NV31/34
place closest to GPU
<<place on bottom north of GPU
<<place on bottom east of GPU
<<place on bottom south of GPU
<<place on bottom west of GPU
<<place on bottom of GPU
NOT USED FOR NV31
NOT USED ON NV18
R548 220K
R82 220K
R545 2.32K
R547 2.32K
R546 1.02K
R578 10K
R581 10K
R570 49.9R 1%
R569 49.9R 1%
2 x 100 Ohm 0402 result in 50Ohm 1/8W
R551 301K
R552 221K
R746 158K
R744 1K
R543 10K
R76 1K
R75 10K
R2256 10K
LB518 150-220R@100MHz
A3V3
Q1
N-IRLML2502_SOT23
Q2
1PS226
Q_PNP
MBDET_G
MBDET_B
U200
U200_1
U200_4
FDC6301N
IC_SUPERSOT-6
COMMON
Q3000
Q3001
AGPVREFCG
AGPVREFCGGPU
C48 .022UF
C724 .047UF
C50 4.7UF
C53 .022UF
C55 4.7UF
C61 .022UF
C591 .047UF
C64 1UF
C567 .01UF
C572 1UF
C62 .047UF
C65 .01UF
C568 .01UF
C75 .022UF
C565 .022UF
C85 .22UF
C581 .01UF
C654 .022UF
C646 .022UF
C615 .022UF
C622 .022UF
C633 .1UF
C641 100PF
C638 470PF
C635 1000PF
C619 4700PF
C652 1UF
C627 100PF
C629 1000PF
C616 4700PF
C625 1UF
C634 100PF
C639 470PF
C649 470PF
C650 1000PF
C644 4700PF
C651 1UF
C669 .1UF
C657 .1UF
C632 .1UF
C658 1UF
C621 1UF
C637 .022UF
C656 1UF
C663 4700PF
C666 .022UF
C667 .1UF
C1353 470PF
C1354 4700PF
C1355 1UF

R746 = 121K 1% for NV18B-A02 silicon
R746 = 158K 1% for NV18B-A03 and later silicon

R570 = 56.2 1% for NV18B-A02 silicon
R570 = 49.9 1% for NV18B-A03 and later silicon

Can be placed on same location.
Alternative stuffing
Dual Layout with U200

AGP spacing rules

PCIAD[31..0]	20MIL
PCICBE[3..0]	20MIL
PCICLK	20MIL
PCIRST*	10MIL
PCIREQ	10MIL
PCIGNT	10MIL
PCIFRAME	10MIL
PCIIRDY	10MIL
PCITRDY	10MIL
PCISTOP	10MIL
PCIDEVSEL	10MIL
PCIPAR	10MIL
PCIINTA	10MIL
AGPRBF	10MIL
AGPWBF	10MIL
AGPDBI_HI	20MIL
AGPDBI_LO	20MIL
AGPST0	15MIL
AGPST1	15MIL
AGPST2	15MIL
AGPADSTB0F	25MIL
AGPADSTB0S	25MIL
AGPADSTB1F	25MIL
AGPADSTB1S	25MIL
AGPSBSTBF	25MIL
AGPSBSTBS	25MIL
AGPSBA[7..0]	20MIL
AGPVREFCG	12MIL_TRACE
AGPVREFGC	10MIL
AGPMBDET	10MIL
AGPSTOP	10MIL

Micro-Star International Co.,LTD.

MS-8936-A04

Size: Custom
Document Number: AGP INTERFACE
Rev: A00
Date: Tuesday, September 16, 2003
Sheet 2 of 11

NV18 FRAMEBUFFER INTERFACE AND DECOUPLING

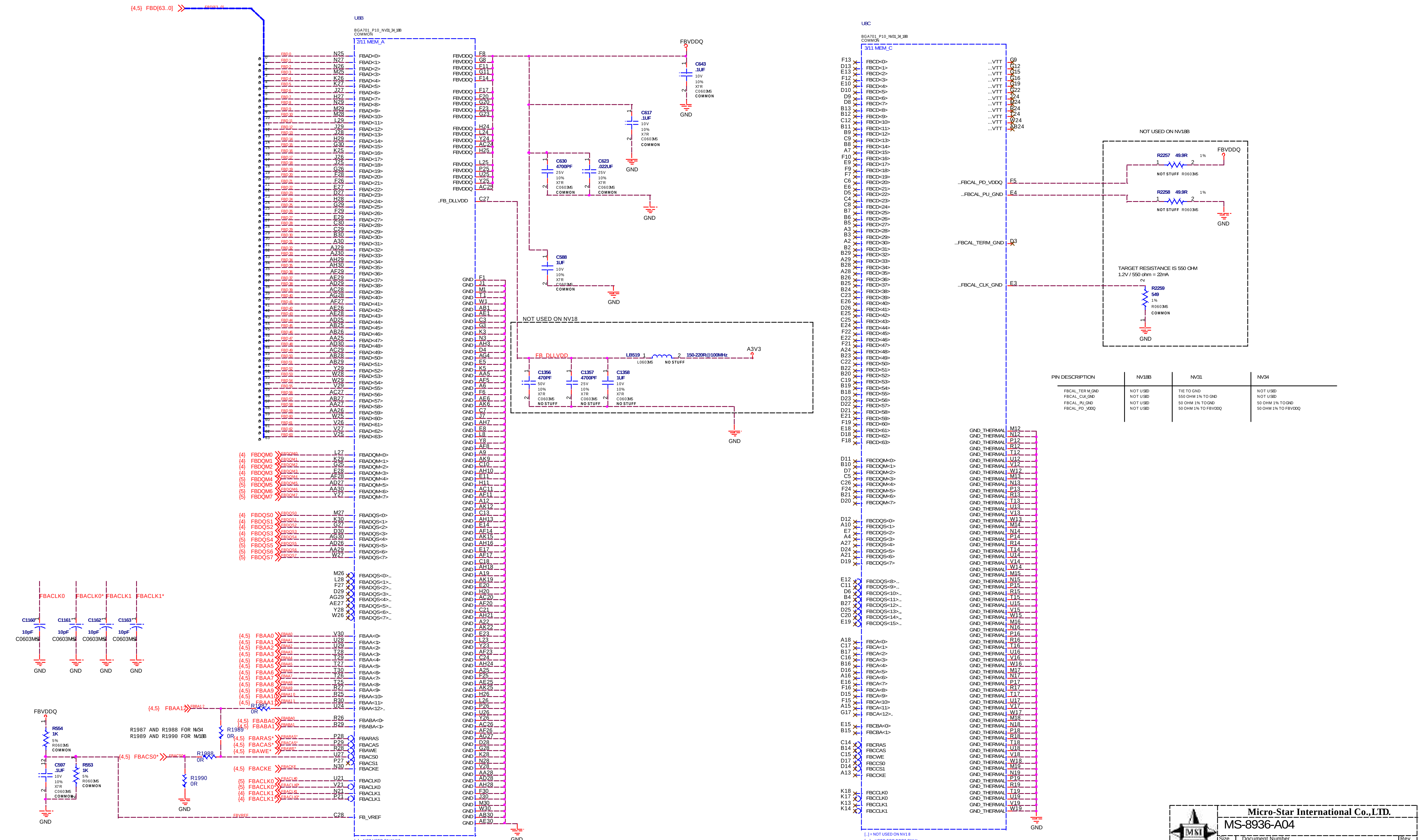
{4,5} FBD[63..0]
U8B
BGA701_P10_NV31_34_18B
COMMON
2/11 MEM_A
FBAD<0> … FBAD<63>
FBADQM<0> … FBADQM<7>
FBADQS<0> … FBADQS<7>
FBADQS<0>_ … FBADQS<7>_
FBAA<0> … FBAA<12>_
FBABA<0>
FBABA<1>
FBARAS
FBACAS
FBAWE
FBACS0
FBACS1
FBACKE
FBACLK0
FBACLK1
FB_VREF
FB_DLLVDD
FBVDDQ
GND
C643 .1UF 10V 10% X7R C0603MS COMMON
C617 .1UF 10V 10% X7R C0603MS COMMON
C630 4700PF 25V 10% X7R C0603MS COMMON
C623 .022UF 25V 10% X7R C0603MS COMMON
C588 1UF 10V 10% X7R C0603MS COMMON
NOT USED ON NV18
FB_DLLVDD
LB519 L0603MS NO STUFF 150-220R@100MHz
A3V3
C1356 470PF 50V 10% X7R C0603MS NO STUFF
C1357 4700PF 25V 10% X7R C0603MS NO STUFF
C1358 1UF 10V 10% X7R C0603MS NO STUFF
FBACLK0 FBACLK0* FBACLK1 FBACLK1*
C1160 10pF C0603MS
C1161 10pF C0603MS
C1162 10pF C0603MS
C1163 10pF C0603MS
FBVDDQ
R554 1K 5% R0603MS COMMON
C597 .1UF 10V 10% X7R C0603MS COMMON
R553 1K 5% R0603MS COMMON
R1987 AND R1988 FOR NV34
R1989 AND R1990 FOR NV18B
R1987 0R
R1988 0R
R1989 0R
R1990 0R
{4,5} FBAA12
{4,5} FBCS0*
FBVREF
[..] = NOT USED ON NV18
[...] = USED FOR DDR2 ONLY
U8C
BGA701_P10_NV31_34_18B
COMMON
3/11 MEM_C
FBCD<0> … FBCD<63>
FBCDQM<0> … FBCDQM<7>
FBCDQS<0> … FBCDQS<7>
FBCDQS<8>_ … FBCDQS<15>_
FBCA<0> … FBCA<12>_
FBCBA<0>
FBCBA<1>
FBCRAS
FBCCAS
FBCWE
FBCCS0
FBCCS1
FBCCKE
FBCCLK0
FBCCLK1
_VTT
GND_THERMAL
_FBCAL_PD_VDDQ
_FBCAL_PU_GND
_FBCAL_TERM_GND
_FBCAL_CLK_GND
NOT USED ON NV18B
FBVDDQ
R2257 49.9R 1% NOT STUFF R0603MS
R2258 49.9R 1% NOT STUFF R0603MS
TARGET RESISTANCE IS 550 OHM
1.2V / 550 ohm = 22mA
R2259 549 1% R0603MS COMMON
[..] = NOT USED ON NV18
[...] = USED FOR DDR2 ONLY

PIN DESCRIPTION	NV18B	NV31	NV34
FBCAL_TERM_GND	NOT USED	TIE TO GND	NOT USED
FBCAL_CLK_GND	NOT USED	550 OHM 1% TO GND	NOT USED
FBCAL_PU_GND	NOT USED	50 OHM 1% TO GND	50 OHM 1% TO GND
FBCAL_PD_VDDQ	NOT USED	50 OHM 1% TO FBVDDQ	50 OHM 1% TO FBVDDQ

Micro-Star International Co.,LTD.
MS-8936-A04
Size: Custom
Document Number: FRAME BUFFER INTERFACE
Rev: A00
Date: Tuesday, September 16, 2003
Sheet 3 of 11

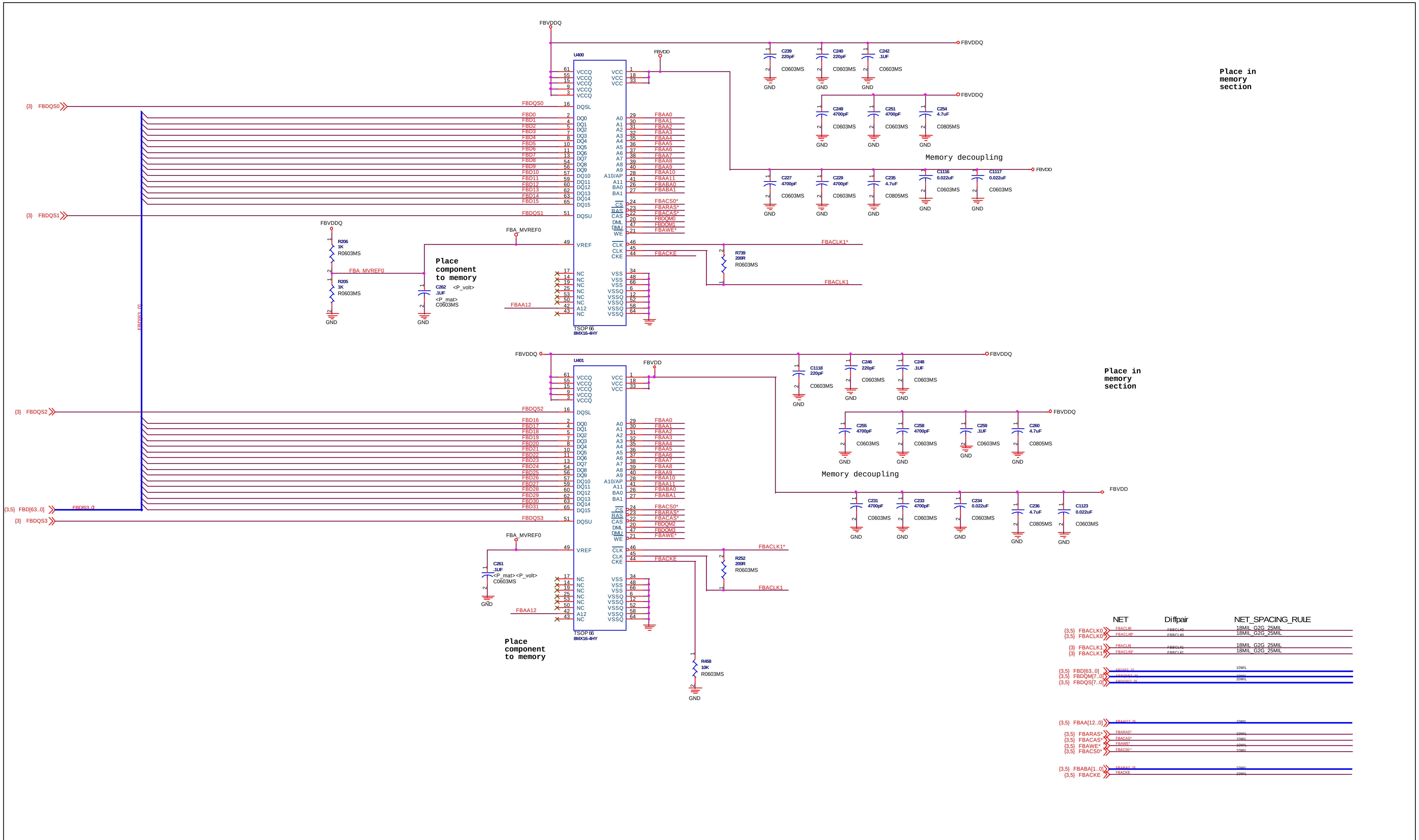
FBVDDQ
U400
FBVDD
VCCQ
VCC
DQSL
DQSU
DQ0
DQ15
A0
A10/AP
A11
BA0
BA1
CS
RAS
CAS
DML
DMU
WE
VREF
CLK
CKE
NC
A12
VSS
VSSQ
TSOP66
8MX16-4HY
{3} FBDQS0
{3} FBDQS1
FBDQS0
FBDQS1
FBD0
FBD15
FBAA0
FBAA11
FBABA0
FBABA1
FBACS0*
FBARAS*
FBACAS*
FBDQM0
FBDQM1
FBAWE*
FBACLK1*
FBACKE
FBACLK1
FBAA12
FBA_MVREF0
R206
1K
R0603MS
R205
1K
R0603MS
C262
.1UF
<P_volt>
<P_mat>
C0603MS
Place component to memory
R739
200R
R0603MS
GND
C239
220pF
C240
220pF
C242
.1UF
C0603MS
C249
4700pF
C251
4700pF
C254
4.7uF
C0805MS
Memory decoupling
C227
4700pF
C229
4700pF
C235
4.7uF
C1116
0.022uF
C1117
0.022uF
Place in memory section
FBD[63..0]
U401
{3} FBDQS2
{3,5} FBD[63..0]
{3} FBDQS3
FBDQS2
FBDQS3
FBD16
FBD31
FBACLK1*
FBACLK1
FBDQM2
FBDQM3
C261
.1UF
<P_mat><P_volt>
C0603MS
R252
200R
R0603MS
R458
10K
R0603MS
Place component to memory
C1118
220pF
C246
220pF
C248
.1UF
Place in memory section
C255
4700pF
C258
4700pF
C259
.1UF
C260
4.7uF
Memory decoupling
C231
4700pF
C233
4700pF
C234
0.022uF
C236
4.7uF
C1123
0.022uF
NET
Diffpair
NET_SPACING_RULE
{3,5} FBACLK0
{3,5} FBACLK0*
FBBCLK0
18MIL_G2G_25MIL
{3} FBACLK1
{3} FBACLK1*
FBBCLK1
18MIL_G2G_25MIL
{3,5} FBD[63..0]
{3,5} FBDQM[7..0]
{3,5} FBDQS[7..0]
10MIL
20MIL
{3,5} FBAA[12..0]
{3,5} FBARAS*
{3,5} FBACAS*
{3,5} FBAWE*
{3,5} FBACS0*
{3,5} FBABA[1..0]
{3,5} FBACKE

Micro-Star International Co., LTD.

MS-8936-A04

Size Custom | Document Number 8x16 DDR 0..31 128 bit | Rev A00

Date: Tuesday, September 16, 2003 | Sheet 4 of 11

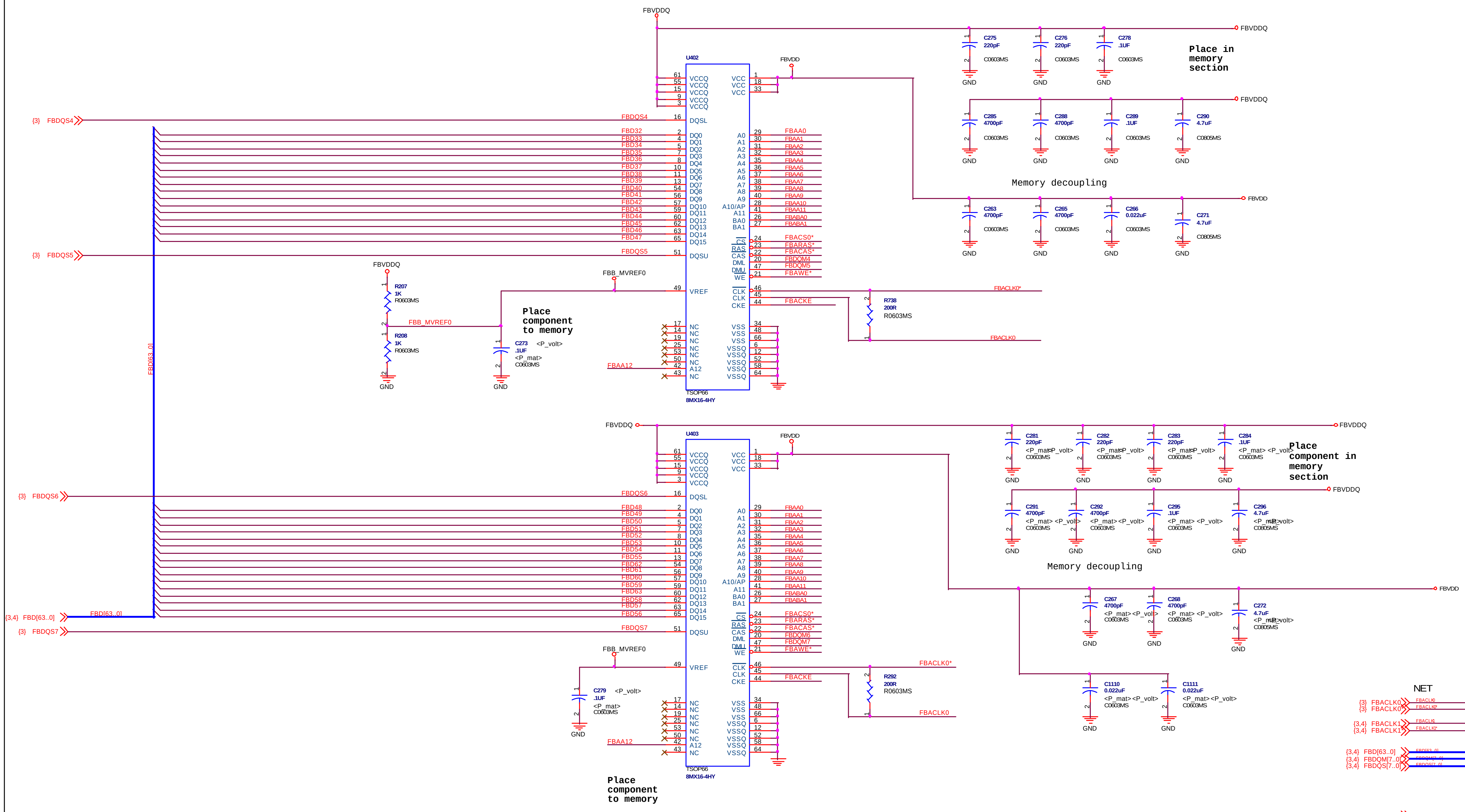
FBVDDQ
FBVDD
U402
VCCQ
VCC
DQSL
DQSU
VREF
CLK
CKE
NC
VSS
VSSQ
A10/AP
BA0
BA1
CS
RAS
CAS
DML
DMU
WE
TSOP66
8MX16-4HY
{3} FBDQS4
{3} FBDQS5
FBDQS4
FBDQS5
FBD32
FBD33
FBD34
FBD35
FBD36
FBD37
FBD38
FBD39
FBD40
FBD41
FBD42
FBD43
FBD44
FBD45
FBD46
FBD47
FBAA0
FBAA1
FBAA2
FBAA3
FBAA4
FBAA5
FBAA6
FBAA7
FBAA8
FBAA9
FBAA10
FBAA11
FBAA12
FBABA0
FBABA1
FBACS0*
FBARAS*
FBACAS*
FBDQM4
FBDQM5
FBAWE*
FBACKE
FBACLK0*
FBACLK0
FBB_MVREF0
R738 200R R0603MS
R207 1K R0603MS
R208 1K R0603MS
C273 .1UF <P_mat> <P_volt> C0603MS
GND
Place component to memory
FBD[63..0]
C275 220pF C0603MS
C276 220pF C0603MS
C278 .1UF C0603MS
Place in memory section
C285 4700pF C0603MS
C288 4700pF C0603MS
C289 .1UF C0603MS
C290 4.7uF C0805MS
Memory decoupling
C263 4700pF C0603MS
C265 4700pF C0603MS
C266 0.022uF C0603MS
C271 4.7uF C0805MS
U403
{3} FBDQS6
{3,4} FBD[63..0]
{3} FBDQS7
FBDQS6
FBDQS7
FBD48
FBD49
FBD50
FBD51
FBD52
FBD53
FBD54
FBD55
FBD62
FBD61
FBD60
FBD59
FBD63
FBD58
FBD57
FBD56
FBDQM6
FBDQM7
R292 200R R0603MS
C279 .1UF <P_mat> <P_volt> C0603MS
Place component to memory
C281 220pF <P_mat> <P_volt> C0603MS
C282 220pF <P_mat> <P_volt> C0603MS
C283 220pF <P_mat> <P_volt> C0603MS
C284 .1UF <P_mat> <P_volt> C0603MS
Place component in memory section
C291 4700pF <P_mat> <P_volt> C0603MS
C292 4700pF <P_mat> <P_volt> C0603MS
C295 .1UF <P_mat> <P_volt> C0603MS
C296 4.7uF <P_mat> <P_volt> C0805MS
Memory decoupling
C267 4700pF <P_mat> <P_volt> C0603MS
C268 4700pF <P_mat> <P_volt> C0603MS
C272 4.7uF <P_mat> <P_volt> C0805MS
C1110 0.022uF <P_mat> <P_volt> C0603MS
C1111 0.022uF <P_mat> <P_volt> C0603MS

NET	Diffpair	NET_SPACING_RULE
{3} FBACLK0	FBBCLK0	18MIL_G2G_25MIL
{3} FBACLK0*	FBBCLK0	18MIL_G2G_25MIL
{3,4} FBACLK1	FBBCLK1	18MIL_G2G_25MIL
{3,4} FBACLK1*	FBBCLK1	18MIL_G2G_25MIL
{3,4} FBD[63..0]		10MIL
{3,4} FBDQM[7..0]		10MIL
{3,4} FBDQS[7..0]		20MIL
{3,4} FBAA[12..0]		10MIL
{3,4} FBARAS*		10MIL
{3,4} FBACAS*		10MIL
{3,4} FBAWE*		10MIL
{3,4} FBACS0*		10MIL
{3,4} FBABA[1..0]		10MIL
{3,4} FBACKE		10MIL

Micro-Star International Co.,LTD.

MS-8936-A04

Size: Custom
Document Number: 8x16 DDR 32..63 128 bit
Rev: A00
Date: Tuesday, September 16, 2003
Sheet 5 of 11

NV18 STRAPPING, BIOS, FAN CONNECTOR

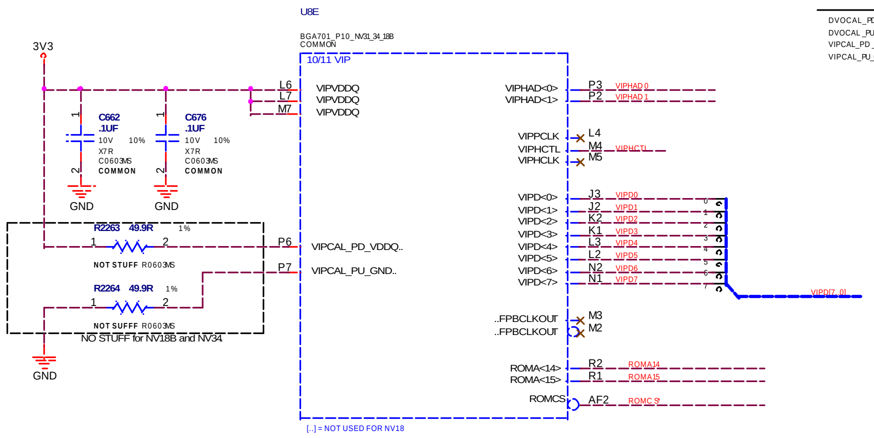
U8E
BGA701_P10_NV18_34_18B
COMMON
10/11 VIP
3V3
C562 .1UF
C676 .1UF
VIPVDDQ
VIPHAD<0>
VIPHAD<1>
VIPPCLK
VIPHCTL
VIPHCLK
VIPD<0>…VIPD<7>
VIPCAL_PD_VDDQ
VIPCAL_PU_GND
R2263 49.9R NOT STUFF
R2264 49.9R NOT SUFF
NO STUFF for NV18B and NV34
..FPBCLKOUT
ROMA<14>
ROMA<15>
ROMCS
VIPD[7..0]
GND
[..] = NOT USED FOR NV18

PIN DESCRIPTION	NV18B	NV31	NV34
DVOCAL_PD_VDDQ	NOT USED	50 OHM 1% TOGND	NOT USED
DVOCAL_PU_GND	NOT USED	55 OHM 1% TO DVOVDDQ	NOT USED
VIPCAL_PD_VDDQ	NOT USED	50 OHM 1% TOGND	NOT USED
VIPCAL_PU_GND	NOT USED	50 OHM 1% TO VIPVDDQ	NOT USED

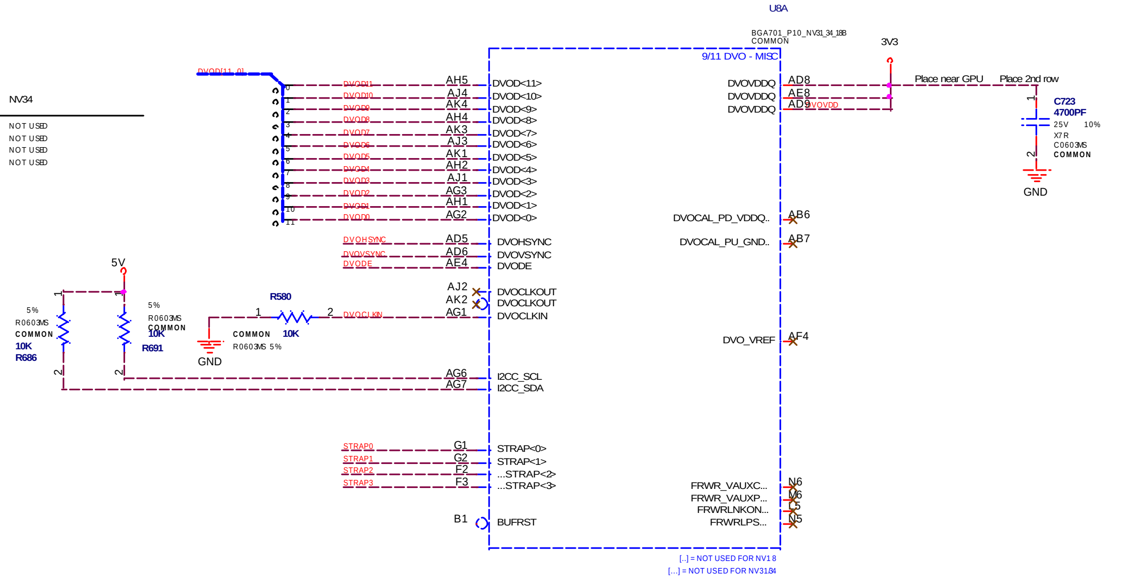
U8A
BGA701_P10_NV18_34_18B
COMMON
9/11 DVO - MISC
DVOD[11..0]
DVOD<11>…DVOD<0>
DVOVDDQ
DVOHSYNC
DVOVSYNC
DVODE
DVOCLKOUT
DVOCLKIN
R580 10K
R586 10K
R691 10K
I2CC_SCL
I2CC_SDA
STRAP<0>…STRAP<3>
BUFRST
DVOCAL_PD_VDDQ
DVOCAL_PU_GND
DVO_VREF
FRWR_VAUXC
FRWR_VAUXP
FRWRLNKON
FRWRLPS
3V3
Place near GPU
Place 2nd row
C723 4700PF
5V
GND
[..] = NOT USED FOR NV18
[..] = NOT USED FOR NV31/34

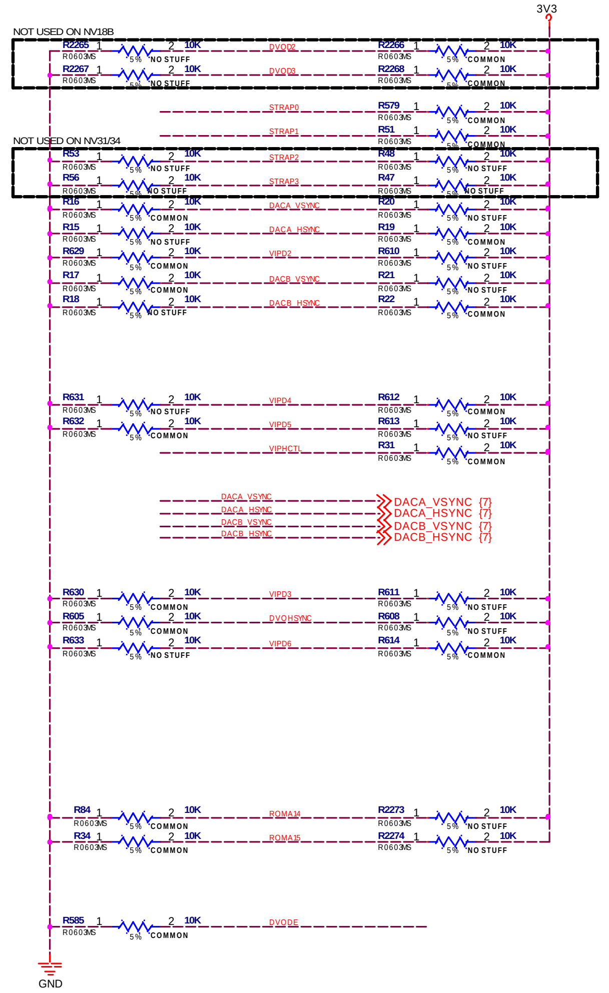
3V3
NOT USED ON NV18B
NOT USED ON NV31/34
NO STUFF
COMMON
10K
DVOD2
DVOD3
STRAP0
STRAP1
STRAP2
STRAP3
DACA_VSYNC
DACA_HSYNC
DACB_VSYNC
DACB_HSYNC
VIPD2
VIPD4
VIPD5
VIPHCTL
VIPD3
DVOHSYNC
VIPD6
ROMA14
ROMA15
DVODE
GND

PLEASE DUALLAY THE PULL-UP
RESISTER AND PULL-DOWN RESISTER.

STRAPPING OPTIONS

Bit Signal	VALUE_ID	VALUEs	
00: PCI_AD_SWAP	PCI_AD	0 REVERSED 1 NORMAL	
01: SUB_VENDOR	SUB_VENDOR	0 NO_BIOS 1 read from BIOS	
02: RAM_CFG_0	RAMCFG[3:0]	0000 2Mx 32 SDR 0001 4Mx 16 SDR	1000 2Mx32 DDR 1001 2Mx32 DDR
03: RAM_CFG_1		0010 RFU 0011 RFU	1010 4Mx16 DDR 1011 8Mx16 DDR
04: RAM_CFG_2		0100 RFU 0101 4Mx 32 SDR	1100 1Mx32 DDR 1101 4Mx32 DDR
05: RAM_CFG_3		0110 8Mx 16 SDR 0111 2Mx32 DDR	1110 RFU 1111 4Mx32 DDR
06: CRYSTAL_0	CRYSTAL[1:0]	00 13.500 Mhz 01 14.31818 Mhz	10 27.000 Mhz 11 unknown
07: TV_MODE_0	TVMODE[1:0]	00 SECAM 01 NTSC	
08: TV_MODE_1		10 PAL 11 CRT	
09: AGP4x/8x			
10: AGP_SBA	AGP_SBA	0 SBA enabled 1 SBA disabled	
11: AGP_FASTWR			
12: PCI_DEVID_0	PCI_DEVID[3:0]	0000 0x0180 ... 1 1110x018F	
13: PCI_DEVID_1			
14: BUS_TYPE	BUS_TYPE[0]	0 PCI 1 AGP	
15: FP_IFACE			
16: USER_0			
17: USER_1			
18: USER_2			
19: USER_3			
20: PCI_DEVID_2			
21: PCI_DEVID_3			
22: CRYSTAL_1			
23: FB_0			
24: FB_1			
25: BR			
26: BR_128M			
27: BR_AGP			
28: BR_IO			
29: ROM_TYPE_0	ROM_TYPE[1:0]	00 Parallel 01 Serial_AT25F	
30: ROM_TYPE_1		10 Serial_SST45VF 11 RFU	
01: 1394_EN_0	1394[0]	0 disabled 1 enabled	

NV18 GPIO

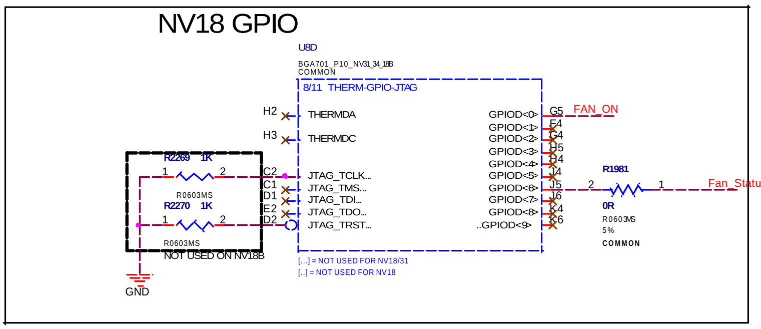
U8D
BGA701_P10_NV18_34_18B
COMMON
8/11 THERM-GPIO-JTAG
THERMDA
THERMDC
JTAG_TCLK
JTAG_TMS
JTAG_TDI
JTAG_TDO
JTAG_TRST
GPIO<0>…GPIO<9>
FAN_ON
R1981 0R
Fan_Status
R2269 1K
R2270 1K
NOT USED ON NV18B
GND
[..] = NOT USED FOR NV18/31
[..] = NOT USED FOR NV18

EEPROM

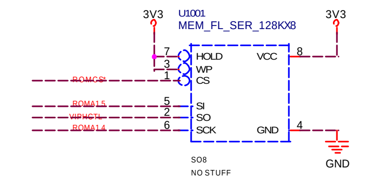
3V3
U1001
MEM_FL_SER_128KX8
HOLD
WP
CS
VCC
SI
SO
SCK
GND
ROMCS
ROMA15
ROMA14
SO8
NO STUFF
GND

U1000 AND U1001 IS DUALAY.

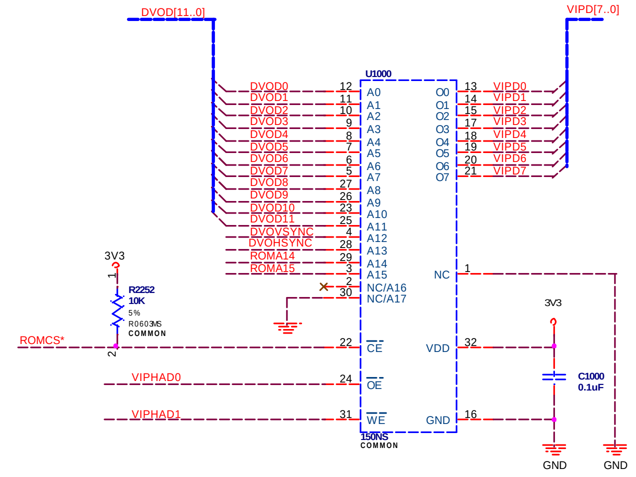
DVOD[11..0]
VIPD[7..0]
U1000
A0…A15
NC/A16
NC/A17
O0…O7
CE
OE
WE
VDD
GND
NC
ROMCS*
VIPHAD0
VIPHAD1
3V3
R2252 10K
C1000 0.1uF
COMMON
GND

FAN Connector

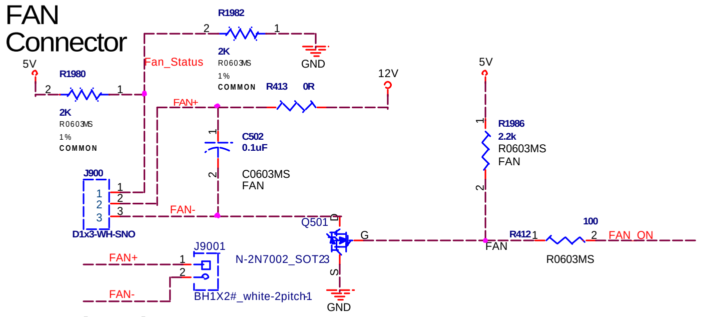
5V
12V
R1980 2K
R1982 2K
Fan_Status
R413 0R
FAN+
FAN-
C502 0.1uF
C0603MS
J900
D1x3-WH-SNO
J9001
BH1X2#_white-2pitch1
Q501
N-2N7002_SOT23
R1986 2.2k
R0603MS
R412 100
FAN_ON
GND

Place close together south-west of GPU

VOLTAGE

NET	Diffpair	NET_SPACING_RULE
DVOD[11..0]		10MIL
DVODE		10MIL
DVOHSYNC		10MIL
DVOVSYNC		10MIL

Micro-Star International Co.,LTD.
MS-8917-A00
Size: Custom
Document Number: NV18B STRAPPING, BIOS
Rev: A00
Date: Tuesday, September 16, 2003
Sheet 6 of 11

NV18 DAC_A, DAC_B, PLL, SYNC AMPL

NET	NET_PHYSICAL_TYPE	VOLTAGE
DACA VDD	12MIL_TRACE	3.3V
DACA VREF	5MIL_TRACE	
DACA RSET	5MIL_TRACE	
DACB VDD	12MIL_TRACE	3.3V
DACB VREF	5MIL_TRACE	
DACB RSET	5MIL_TRACE	
PLLVDD	12MIL_TRACE	3.3V

	NET	IMPEDANCE	NET_SPACING_RULE
{8} DACA_RED	DACA RED	37.5 OHM	20MIL_G2G_30MIL
{8} DACA_GREEN	DACA GREEN	37.5 OHM	20MIL_G2G_30MIL
{8} DACA_BLUE	DACA BLUE	37.5 OHM	20MIL_G2G_30MIL
{9} DACB_RED	DACB RED	37.5 OHM	20MIL_G2G_30MIL
{9} DACB_GREEN	DACB GREEN	37.5 OHM	20MIL_G2G_30MIL
{9} DACB_BLUE	DACB BLUE	37.5 OHM	20MIL_G2G_30MIL

NV18 DAC_A

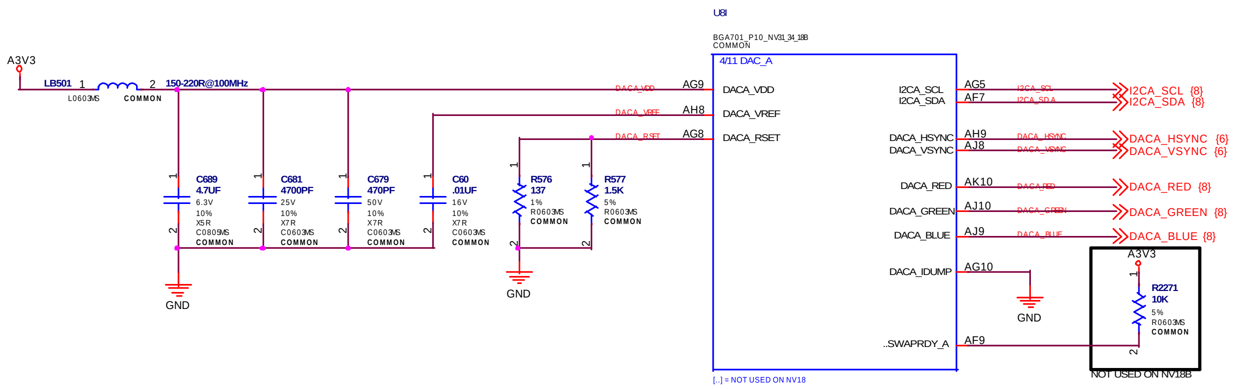
U8I
BGA701_P10_NV31_34_18B
COMMON
4/11 DAC_A
A3V3
LB501 1 2 150-220R@100MHz
L0603MS COMMON
DACA_VDD AG9 DACA_VDD
DACA_VREF AH8 DACA_VREF
DACA_RSET AG8 DACA_RSET
C689 4.7UF 6.3V 10% X5R C0805MS COMMON
C681 4700PF 25V 10% X7R C0603MS COMMON
C679 470PF 50V 10% X7R C0603MS COMMON
C60 .01UF 16V 10% X7R C0603MS COMMON
R576 137 1% R0603MS COMMON
R577 1.5K 5% R0603MS COMMON
GND
I2CA_SCL AG5 I2CA_SCL {8}
I2CA_SDA AF7 I2CA_SDA {8}
DACA_HSYNC AH9 DACA_HSYNC {6}
DACA_VSYNC AJ8 DACA_VSYNC {6}
DACA_RED AK10 DACA_RED {8}
DACA_GREEN AJ10 DACA_GREEN {8}
DACA_BLUE AJ9 DACA_BLUE {8}
DACA_IDUMP AG10
..SWAPRDY_A AF9
A3V3
R2271 10K 5% R0603MS COMMON
NOT USED ON NV18B
[..] = NOT USED ON NV18

NV18 DAC_B with RSet select

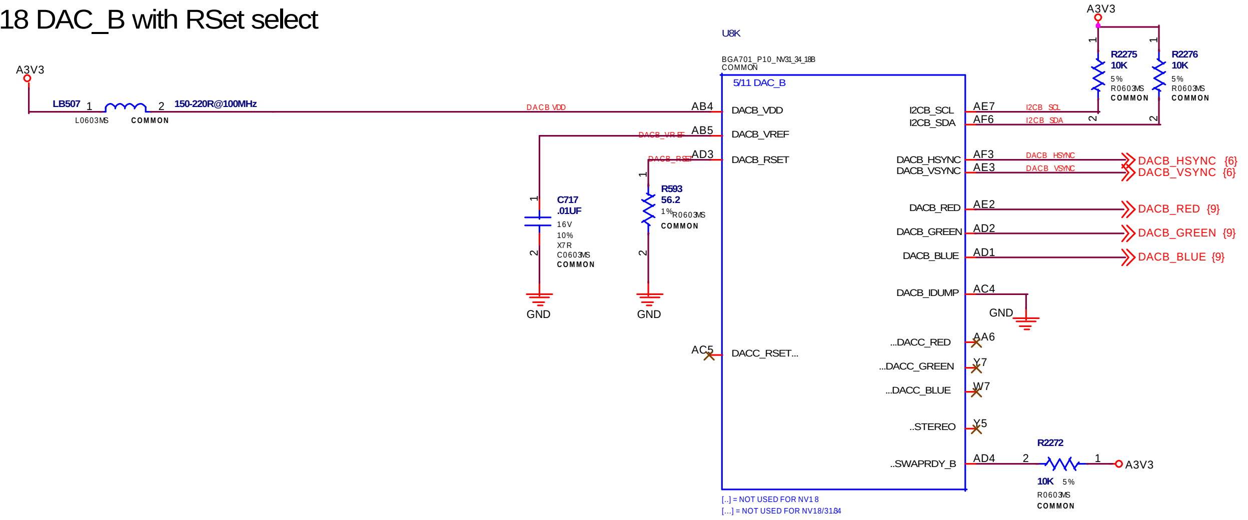
U8K
BGA701_P10_NV31_34_18B
COMMON
5/11 DAC_B
A3V3
LB507 1 2 150-220R@100MHz
L0603MS COMMON
DACB VDD AB4 DACB_VDD
DACB_VREF AB5 DACB_VREF
DACB_RSET AD3 DACB_RSET
C717 .01UF 16V 10% X7R C0603MS COMMON
R593 56.2 1% R0603MS COMMON
GND
AC5 DACC_RSET...
A3V3
R2275 10K 5% R0603MS COMMON
R2276 10K 5% R0603MS COMMON
I2CB_SCL AE7 I2CB SCL
I2CB_SDA AF6 I2CB SDA
DACB_HSYNC AF3 DACB HSYNC DACB_HSYNC {6}
DACB_VSYNC AE3 DACB VSYNC DACB_VSYNC {6}
DACB_RED AE2 DACB_RED {9}
DACB_GREEN AD2 DACB_GREEN {9}
DACB_BLUE AD1 DACB_BLUE {9}
DACB_IDUMP AC4
...DACC_RED AA6
...DACC_GREEN Y7
...DACC_BLUE W7
..STEREO Y5
..SWAPRDY_B AD4
R2272 2 1 A3V3
10K 5% R0603MS COMMON
[..] = NOT USED FOR NV18
[...] = NOT USED FOR NV18/31/34

NV18 PLL

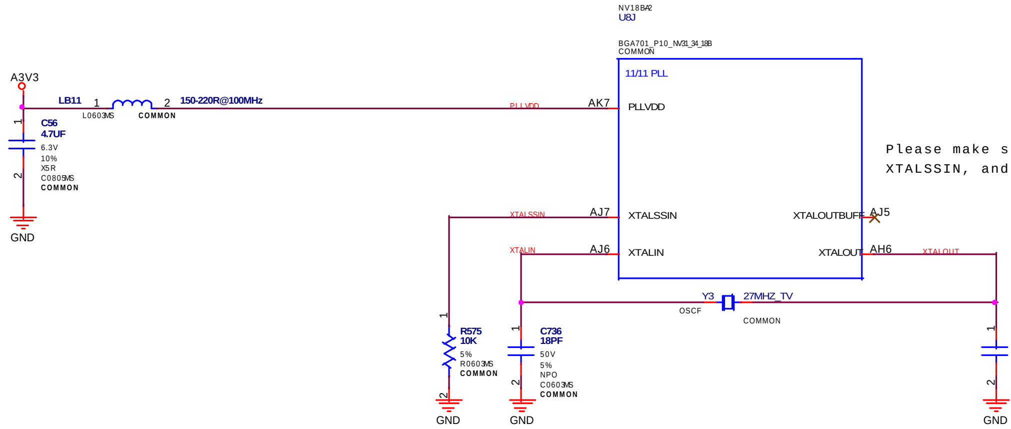
NV18BA2
U8J
BGA701_P10_NV31_34_18B
COMMON
11/11 PLL
A3V3
LB11 1 2 150-220R@100MHz
L0603MS COMMON
C56 4.7UF 6.3V 10% X5R C0805MS COMMON
PLLVDD AK7 PLLVDD
XTALSSIN AJ7 XTALSSIN
XTALIN AJ6 XTALIN
XTALOUTBUFF AJ5
XTALOUT AH6 XTALOUT
Y3 27MHZ_TV
OSCF COMMON
R575 10K 5% R0603MS COMMON
C736 18PF 50V 5% NPO C0603MS COMMON
C743 18PF 50V 5% NPO C0603MS COMMON
GND

```
Please make sure to keep all components and nets related to pins XTALIN, XTALOUT,
XTALSSIN, and XTALOUTBUFF away from everything else (place all on TOP).
```

SYNC Amplifier

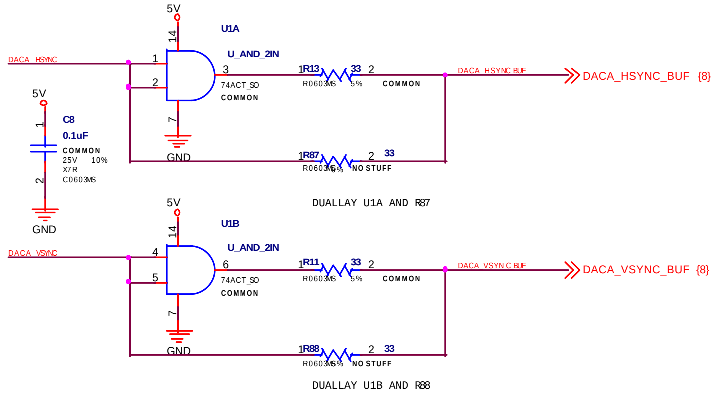
5V
U1A
U_AND_2IN
DACA HSYNC 1 2 3
74ACT_SO COMMON
14 7
R13 1 33 2 R0603MS 5% COMMON
DACA HSYNC BUF DACA_HSYNC_BUF {8}
C8 0.1uF COMMON 25V 10% X7R C0603MS
GND
R87 1 2 33 R0603MS 5% NO STUFF
DUALLAY U1A AND R87
U1B
U_AND_2IN
DACA VSYNC 4 5 6
74ACT_SO COMMON
R11 1 33 2 R0603MS 5% COMMON
DACA VSYNC BUF DACA_VSYNC_BUF {8}
R88 1 2 33 R0603MS 5% NO STUFF
DUALLAY U1B AND R88

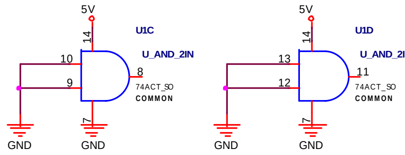
5V
U1C
U_AND_2IN
14 10 9 8 7
74ACT_SO COMMON
U1D
U_AND_2IN
14 13 12 11 7
74ACT_SO COMMON
GND

Micro-Star International Co.,LTD.
MS-8936-A04
Size Custom
Document Number DAC_A,DAC_B,PLL,SYNC AMPL
Rev A00
Date: Tuesday, September 16, 2003
Sheet 7 of 11

DACB output

NET	IMPEDANCE	NET_SPACING_RULE
ARF	37.5 OHM	20MIL_G2G_30MIL
AGF	37.5 OHM	20MIL_G2G_30MIL
ABF	37.5 OHM	20MIL_G2G_30MIL
DACA RED C	10MIL_TRACE	20MIL_G2G_30MIL
DACA GREEN C	10MIL_TRACE	20MIL_G2G_30MIL
DACA BLUE C	10MIL_TRACE	20MIL_G2G_30MIL

EMI-FILTER

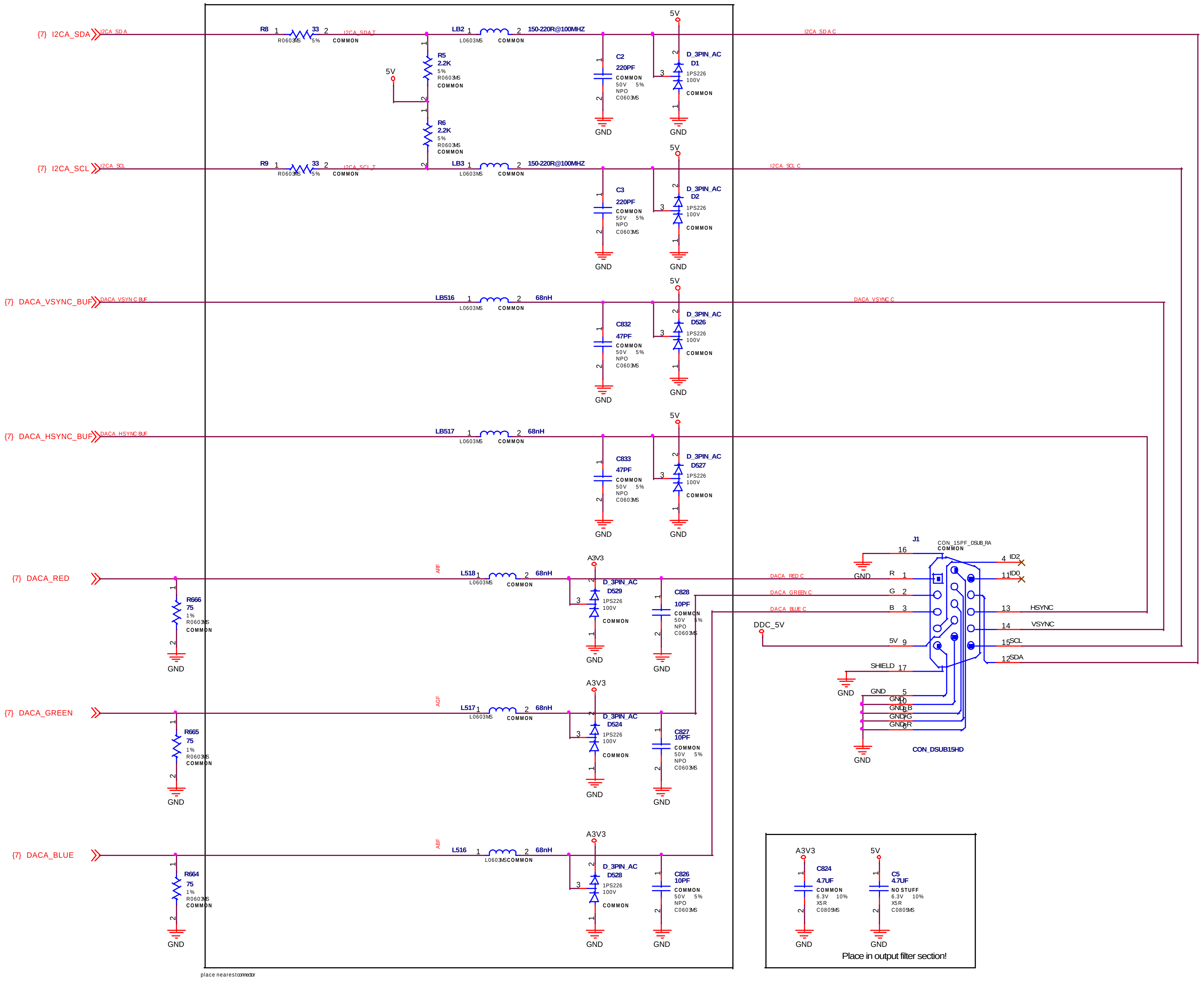
{7} I2CA_SDA
I2CA SDA
R8 1 33 2 R0603MS 5% COMMON
I2CA_SDA_T
LB2 1 2 150-220R@100MHZ L0603MS COMMON
R5 2.2K 5% R0603MS COMMON
R6 2.2K 5% R0603MS COMMON
5V
C2 220PF COMMON 50V 5% NPO C0603MS
D_3PIN_AC D1 1PS226 100V COMMON
I2CA SDA C
{7} I2CA_SCL
I2CA SCL
R9 1 33 2 R0603MS 5% COMMON
I2CA_SCL_T
LB3 1 2 150-220R@100MHZ L0603MS COMMON
C3 220PF COMMON 50V 5% NPO C0603MS
D_3PIN_AC D2 1PS226 100V COMMON
I2CA SCL C
{7} DACA_VSYNC_BUF
DACA VSYNC BUF
LB516 1 2 68nH L0603MS COMMON
C832 47PF COMMON 50V 5% NPO C0603MS
D_3PIN_AC D526 1PS226 100V COMMON
DACA VSYNC C
{7} DACA_HSYNC_BUF
DACA HSYNC BUF
LB517 1 2 68nH L0603MS COMMON
C833 47PF COMMON 50V 5% NPO C0603MS
D_3PIN_AC D527 1PS226 100V COMMON
{7} DACA_RED
R666 75 1% R0603MS COMMON
ARF
L518 1 2 68nH L0603MS COMMON
A3V3
D_3PIN_AC D529 1PS226 100V COMMON
C828 10PF COMMON 50V 5% NPO C0603MS
{7} DACA_GREEN
R665 75 1% R0603MS COMMON
AGF
L517 1 2 68nH L0603MS COMMON
D_3PIN_AC D524 1PS226 100V COMMON
C827 10PF COMMON 50V 5% NPO C0603MS
{7} DACA_BLUE
R664 75 1% R0603MS COMMON
ABF
L516 1 2 68nH L0603MS COMMON
D_3PIN_AC D528 1PS226 100V COMMON
C826 10PF COMMON 50V 5% NPO C0603MS
GND
place nearest connector
J1
CON_15PF_DSUB_RA COMMON
DACA RED C
DACA GREEN C
DACA BLUE C
DDC_5V
R 1
G 2
B 3
5V 9
16
SHIELD 17
GND 5
GND 10
GND_B 8
GND_G 7
GND_R 6
4 ID2
11 ID0
13 HSYNC
14 VSYNC
15 SCL
12 SDA
CON_DSUB15HD
A3V3
C824 4.7UF COMMON 6.3V 10% X5R C0805MS
5V
C5 4.7UF NO STUFF 6.3V 10% X5R C0805MS
Place in output filter section!

DDC 5V

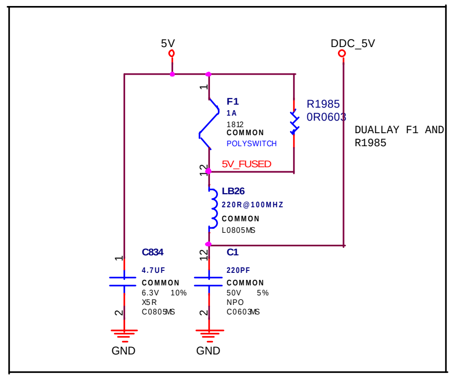
5V
DDC_5V
F1 1A 1812 COMMON POLYSWITCH
R1985 0R0603
DUALLAY F1 AND R1985
5V_FUSED
LB26 220R@100MHZ COMMON L0805MS
C834 4.7UF COMMON 6.3V 10% X5R C0805MS
C1 220PF COMMON 50V 5% NPO C0603MS
GND

Micro-Star International Co.,LTD.

MS-8936-A04

Size	Document Number	Rev
Custom	DAC A CONNECT	A00

Date: Tuesday, September 16, 2003 | Sheet 8 of 11

INTERNAL TMDS POWER AND DECOUPLING

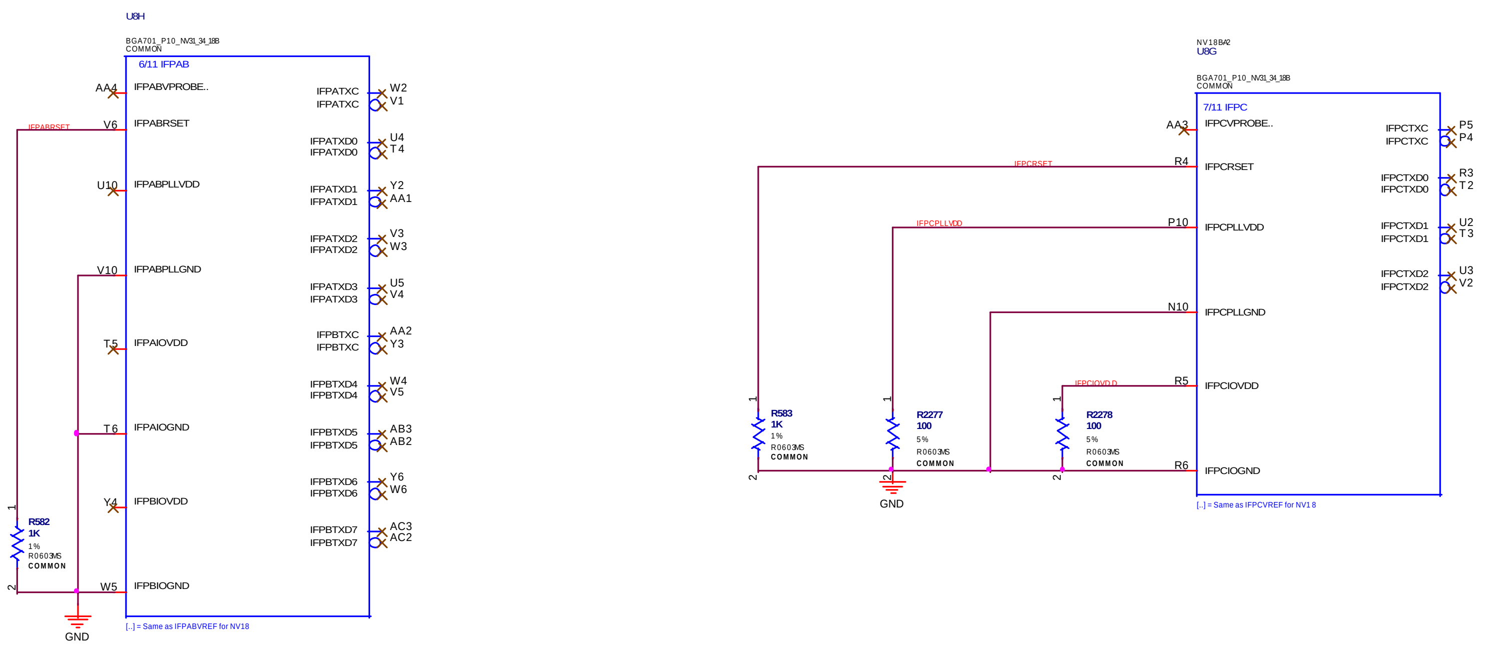
U8H
BGA701_P10_NV31_34_18B
COMMON
6/11 IFPAB
AA4 IFPABVPROBE..
V6 IFPABRSET
IFPABRSET
U10 IFPABPLLVDD
V10 IFPABPLLGND
T5 IFPAIOVDD
T6 IFPAIOGND
Y4 IFPBIOVDD
W5 IFPBIOGND
IFPATXC W2
IFPATXC V1
IFPATXD0 U4
IFPATXD0 T4
IFPATXD1 Y2
IFPATXD1 AA1
IFPATXD2 V3
IFPATXD2 W3
IFPATXD3 U5
IFPATXD3 V4
IFPBTXC AA2
IFPBTXC Y3
IFPBTXD4 W4
IFPBTXD4 V5
IFPBTXD5 AB3
IFPBTXD5 AB2
IFPBTXD6 Y6
IFPBTXD6 W6
IFPBTXD7 AC3
IFPBTXD7 AC2
R582
1K
1%
R0603MS
COMMON
GND
[..] = Same as IFPABVREF for NV18
NV18B42
U8G
BGA701_P10_NV31_34_18B
COMMON
7/11 IFPC
AA3 IFPCVPROBE..
R4 IFPCRSET
IFPCRSET
P10 IFPCPLLVDD
IFPCPLLVDD
N10 IFPCPLLGND
R5 IFPCIOVDD
IFPCIOVDD
R6 IFPCIOGND
IFPCTXC P5
IFPCTXC P4
IFPCTXD0 R3
IFPCTXD0 T2
IFPCTXD1 U2
IFPCTXD1 T3
IFPCTXD2 U3
IFPCTXD2 V2
R583
1K
1%
R0603MS
COMMON
R2277
100
5%
R0603MS
COMMON
R2278
100
5%
R0603MS
COMMON
GND
[..] = Same as IFPCVREF for NV18

VIDEO OUT CONNECTOR

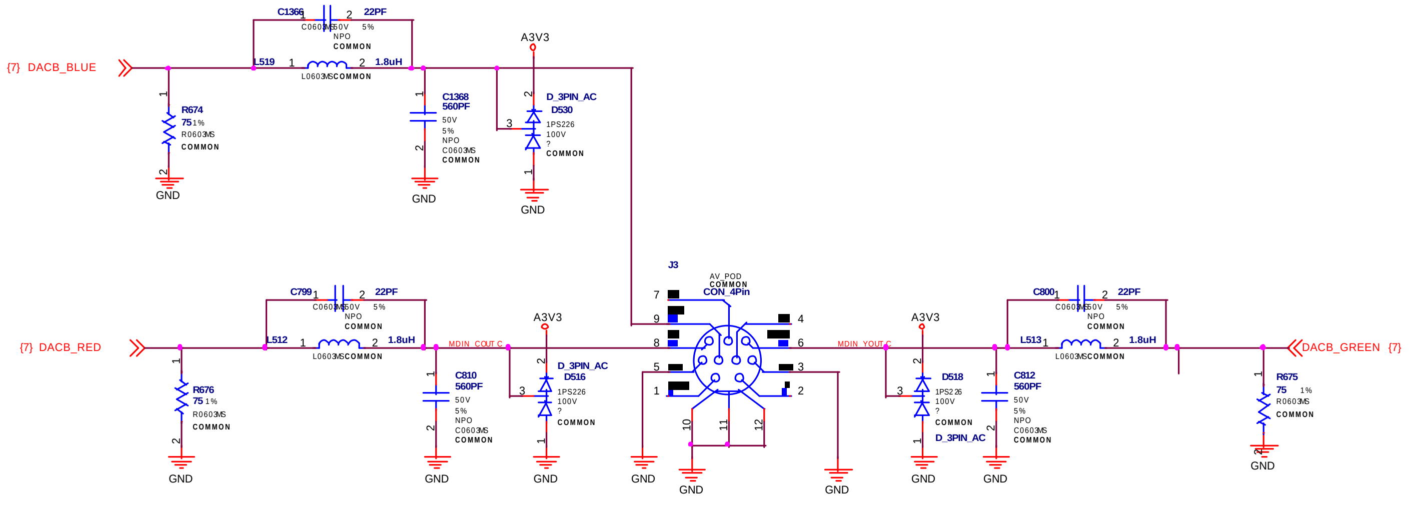
{7} DACB_BLUE
C1366 22PF
C0603MS 50V 5%
NPO
COMMON
L519 1.8uH
L0603MS COMMON
A3V3
R674
75 1%
R0603MS
COMMON
C1368
560PF
50V
5%
NPO
C0603MS
COMMON
D_3PIN_AC
D530
1PS226
100V
?
COMMON
GND
J3
AV_POD
COMMON
CON_4Pin
{7} DACB_RED
C799 22PF
L512 1.8uH
MDIN_COUT C
R676
75 1%
C810
560PF
D_3PIN_AC
D516
MDIN_YOUT C
D518
D_3PIN_AC
C812
560PF
C800 22PF
L513 1.8uH
R675
75 1%
DACB_GREEN {7}
GND

Micro-Star International Co.,LTD.

MS-8936-A04

Size	Document Number	Rev
Custom	VIDEO IN/OUT CONNECT	A00
Date: Tuesday, September 16, 2003	Sheet 9 of 11	

POWER SUPPLY

NET	NET_PHYSICAL_TYPE	VOLTAGE
3V3	12MIL_TRACE	3.3V
A3V3	12MIL_TRACE	3.3V
NVVDD	12MIL_TRACE	1.65V
5V	12MIL_TRACE	5V
12V	12MIL_TRACE	12V
A3V3_ADJ	10MIL_TRACE	
FBVDDQ	12MIL_TRACE	2.5V
FBVDD	12MIL_TRACE	3.3V

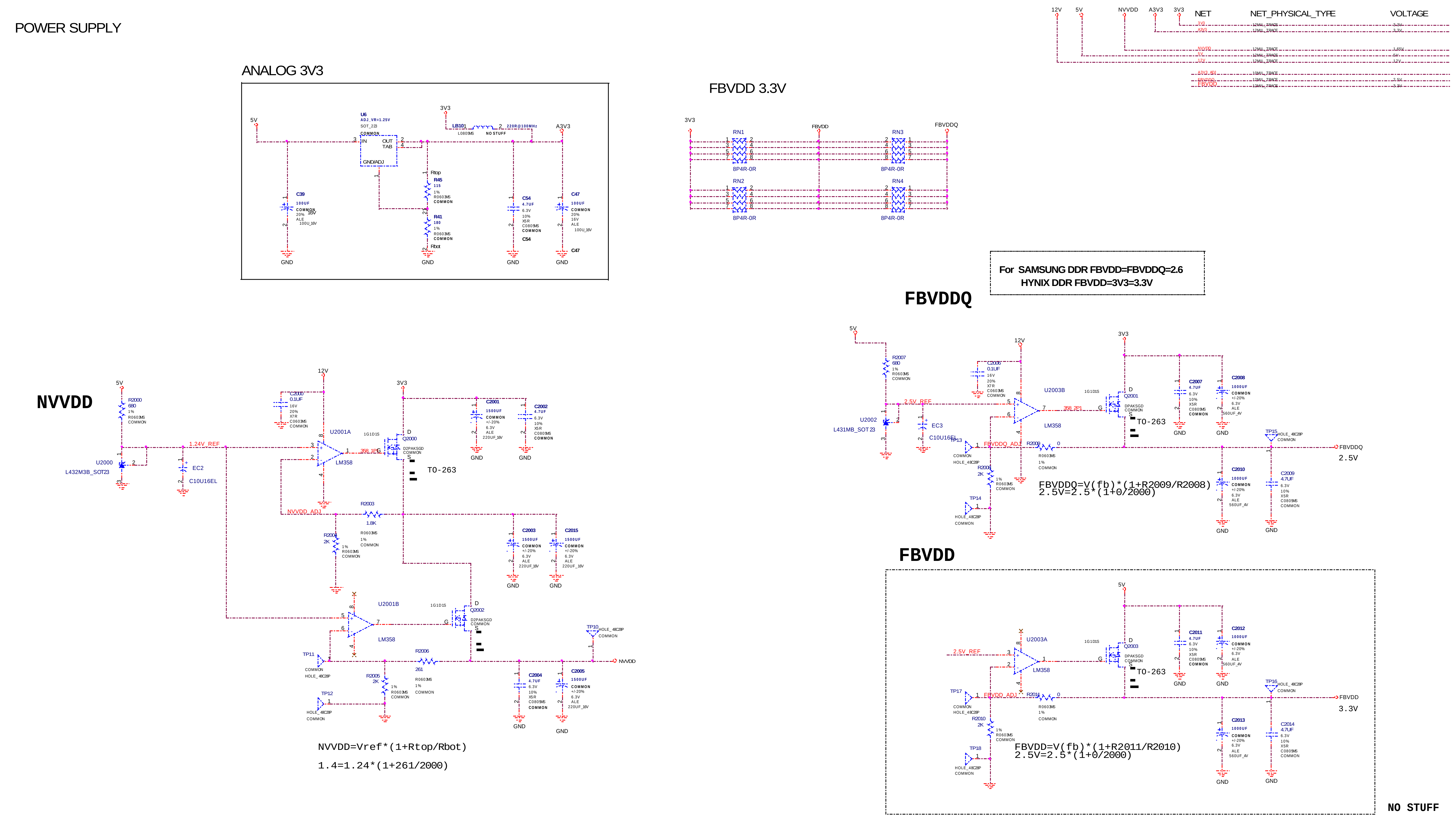
12V
5V
NVVDD
A3V3
3V3
ANALOG 3V3
U6
ADJ_VR=1.25V
SOT_223
COMMON
IN
OUT
TAB
GND/ADJ
LB101
L0805MS
220R@100MHz
NO STUFF
Rtop
R45
115
1%
R0603MS
COMMON
R41
180
Rbot
C39
100UF
COMMON
20%
16V
ALE
100U_16V
C54
4.7UF
6.3V
10%
X5R
C0805MS
C47
GND
FBVDD 3.3V
FBVDD
FBVDDQ
RN1
RN2
RN3
RN4
8P4R-0R
NVVDD
R2000
680
U2000
L432M3B_SOT23
EC2
C10U16EL
1.24V_REF
C2000
0.1UF
16V
X7R
C0603MS
U2001A
LM358
1G1D1S
Q2000
D2PAKSGD
TO-263
C2001
1500UF
+/-20%
220UF_16V
C2002
4.7UF
NVDD_ADJ
R2003
1.8K
R2004
2K
C2003
C2015
U2001B
Q2002
R2006
261
R2005
TP10
TP11
TP12
HOLE_48C8P
C2004
C2005
FBVDDQ
R2007
U2002
L431MB_SOT23
2.5V_REF
EC3
C10U16EL
C2006
U2003B
Q2001
C2007
C2008
1000UF
560UF_4V
TP13
TP14
TP15
FBVDDQ_ADJ
R2008
R2009
0
C2009
C2010
2.5V
FBVDD
U2003A
Q2003
C2011
C2012
C2013
C2014
TP16
TP17
TP18
FBVDD_ADJ
R2010
R2011
3.3V

For SAMSUNG DDR FBVDD=FBVDDQ=2.6
HYNIX DDR FBVDD=3V3=3.3V

NVVDD=Vref*(1+Rtop/Rbot)

1.4=1.24*(1+261/2000)

FBVDDQ=V(fb)*(1+R2009/R2008)
2.5V=2.5*(1+0/2000)

FBVDD=V(fb)*(1+R2011/R2010)
2.5V=2.5*(1+0/2000)

NO STUFF

Micro-Star International Co.,LTD.		
MS-8936-A04		
Size Custom	Document Number POWER SUPPLY	Rev A00
Date: Tuesday, September 16, 2003	Sheet 10 of 11	

MECHANICS

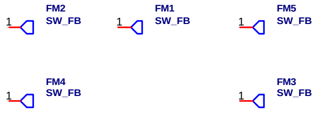
FM2
SW_FB
1
FM1
SW_FB
1
FM5
SW_FB
1
FM4
SW_FB
1
FM3
SW_FB
1

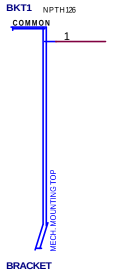
BKT1
NPTH126
COMMON
1
MECH. MOUNTING TOP
BRACKET

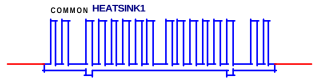
COMMON
HEATSINK1

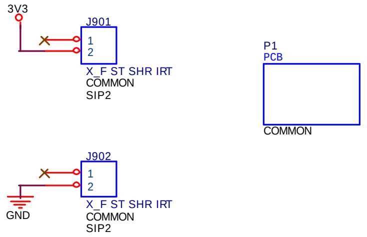
3V3
J901
1
2
X_F ST SHR IRT
COMMON
SIP2
P1
PCB
COMMON
J902
1
2
GND
X_F ST SHR IRT
COMMON
SIP2

E22-8935010-C22

Mech, VGA Card, Bracket, SPCC/2,V,D-S,V122, FOR MS-8935/8936

`Bracket Same as MS-8847`

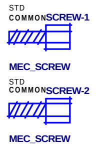
STD
COMMON
SCREW-1
MEC_SCREW
STD
COMMON
SCREW-2
MEC_SCREW

	NET	NET_PHYSICAL_TYPE	VOLTAGE
3V3	3V3	12MIL_TRACE	3.3V
5V	5V	12MIL_TRACE	5V

Micro-Star International Co.,LTD.

MS-8936-A04

Size	Document Number	Rev
Custom	MECHANICS	A00

Date: Tuesday, September 16, 2003 | Sheet 11 of 11