(1) PCI-EXPRESS EDGE CONNECTOR

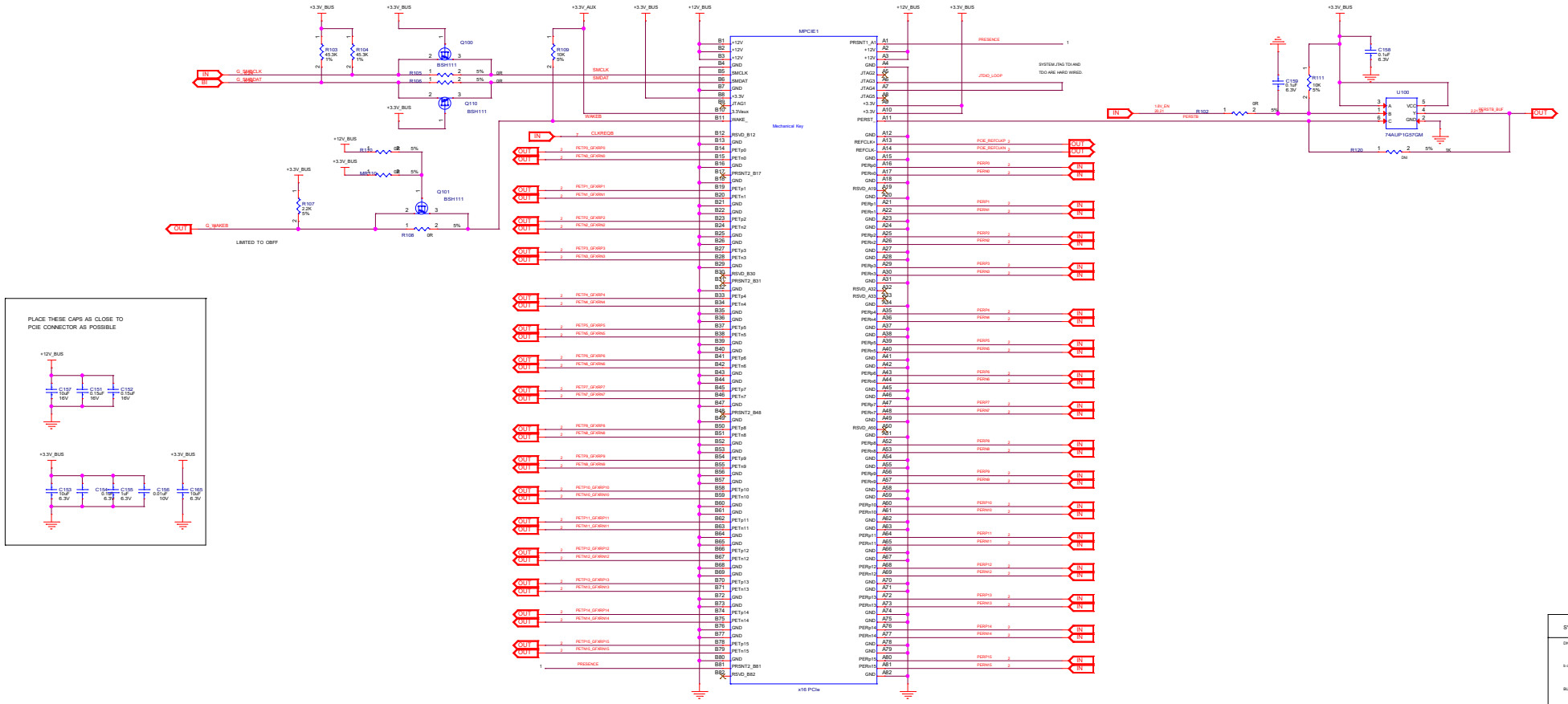

MICRO-STAR INT'L CO.,LTD		
MS-V341		
Size: Custom	Document Description: 0001 PCIE EDGE CONNECTOR	Rev: 2.2
Date: Monday, July 03, 2017	Sheet 1 of 26	

(2) ELLESMERE PCIE INTERFACE

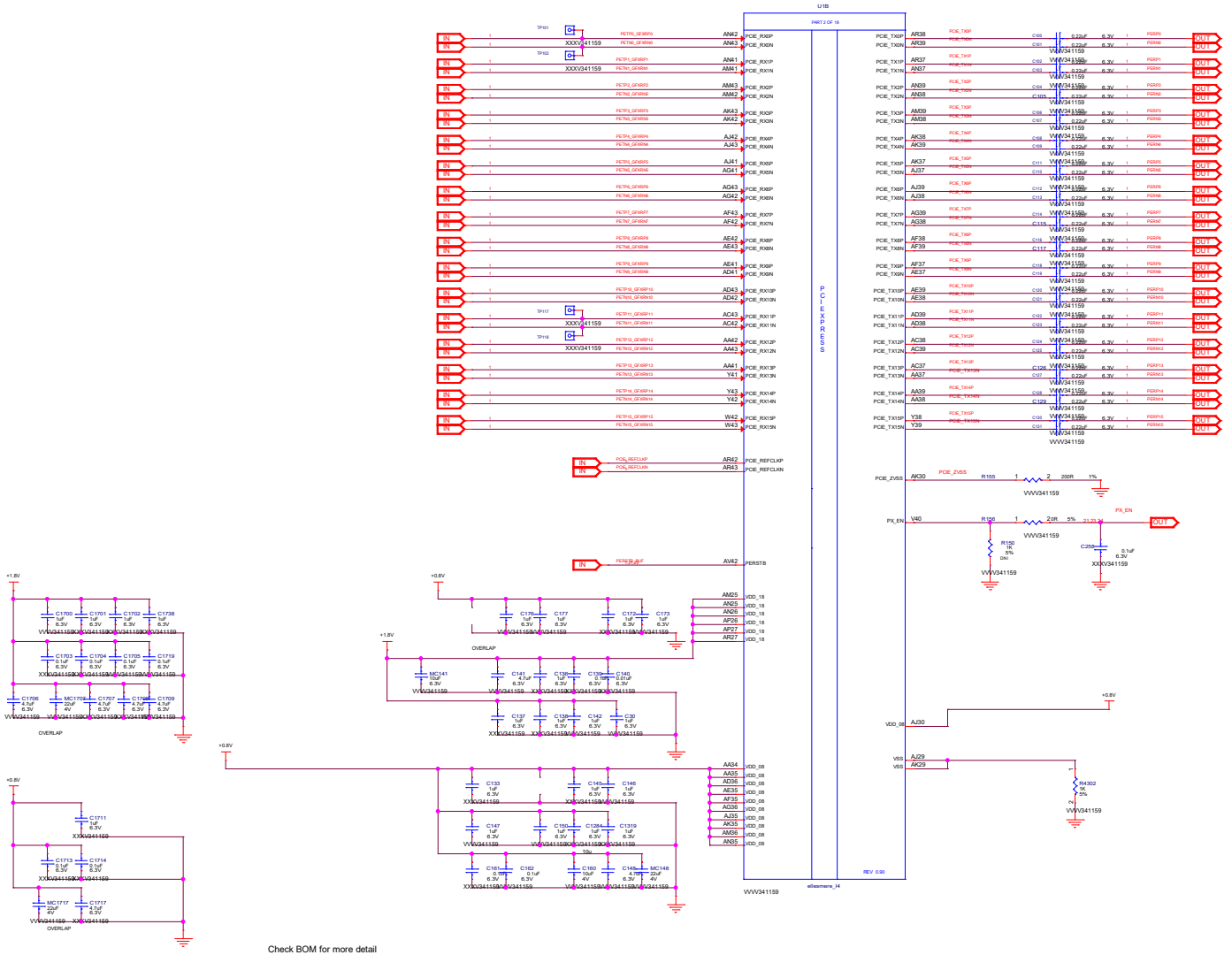

Check BOM for more detail

MSI	MICRO-STAR INT'L CO.,LTD	
	MS-V341	
Size: Custom	Document Description: 0002 ELLESMERE PCIE INTERFACE	Rev: 2.2
Date: Monday, July 03, 2017	Sheet 2 of 26	

(3) ELLESMERE MEM INTERFACE CH A/B

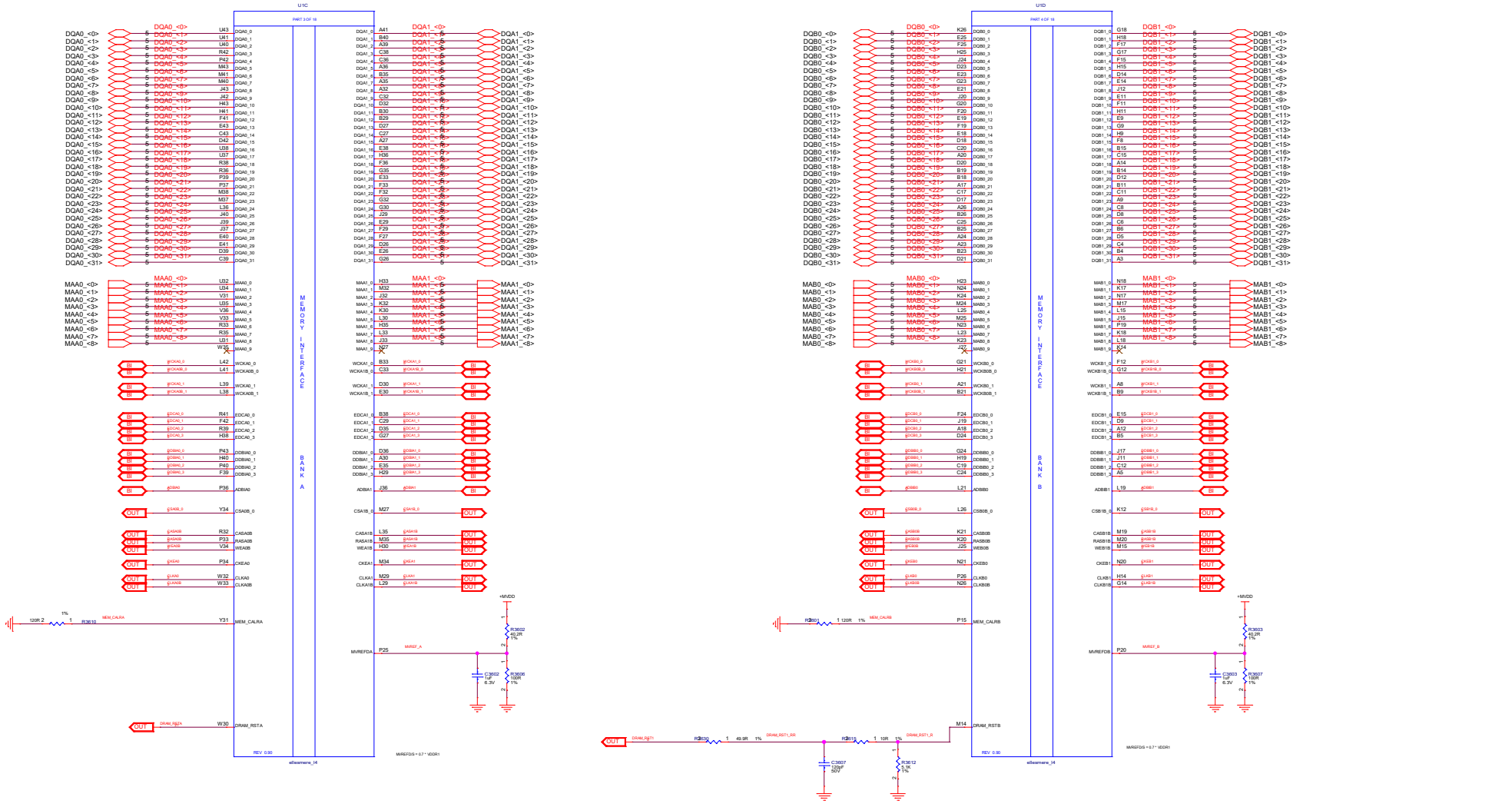

MICRO-STAR INT'L CO.,LTD		
MS-V341		
Size: Custom	Document Description: 0003 ELLESMERE MEM CH AB	Rev: 2.2
Date: Monday, July 03, 2017	Sheet 3 of 26	

(4) ELLESMERE MEM INTERFACE CH C/D

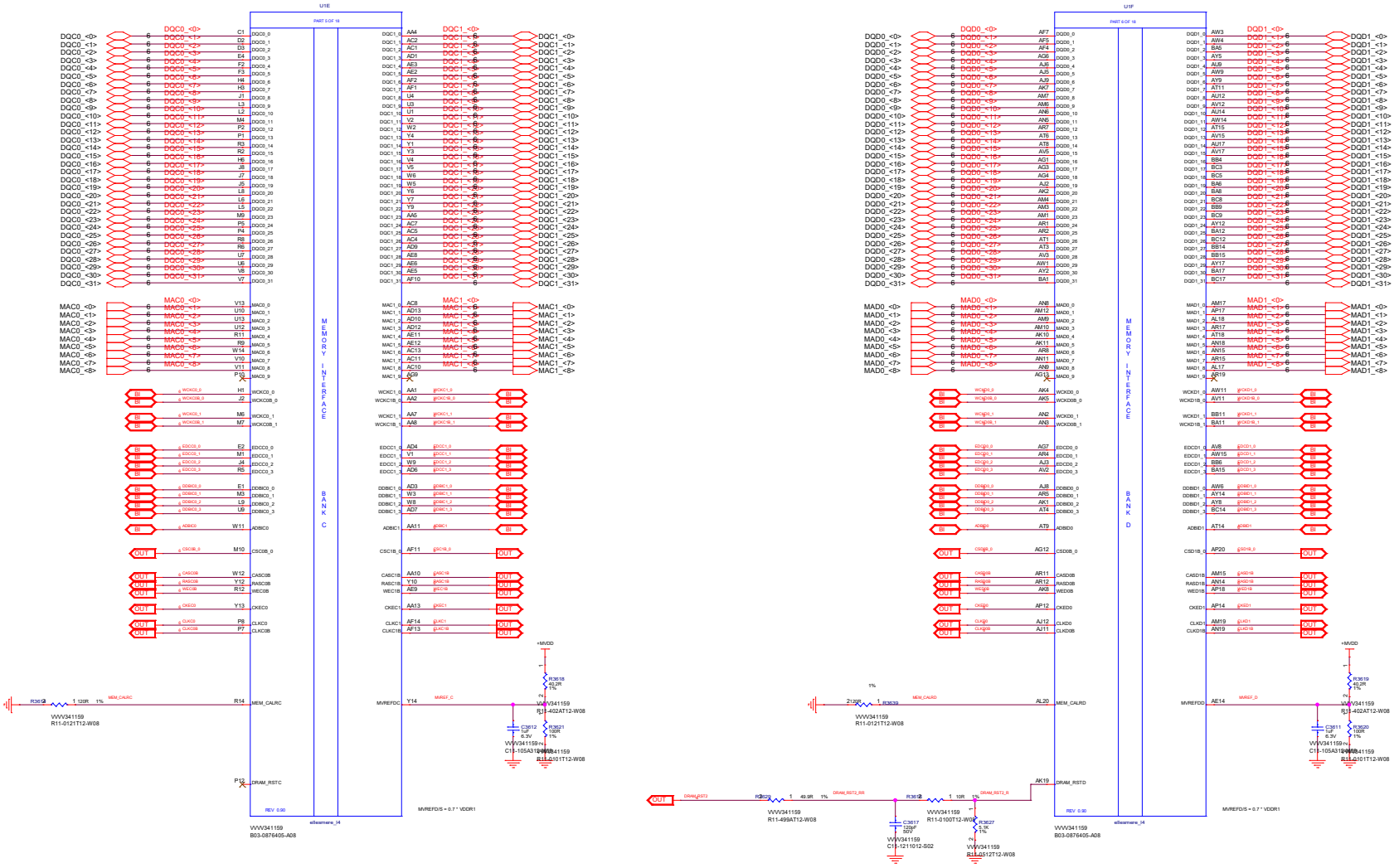

MICRO-STAR INT'L CO.,LTD		
MS-V341		
Size: Custom	Document Description: 0004 ELLESMERE MEM CH CD	Rev: 2.2
Date: Monday, July 03, 2017	Sheet 4 of 26	

(5) GDDR5 MEMORY CH A/B

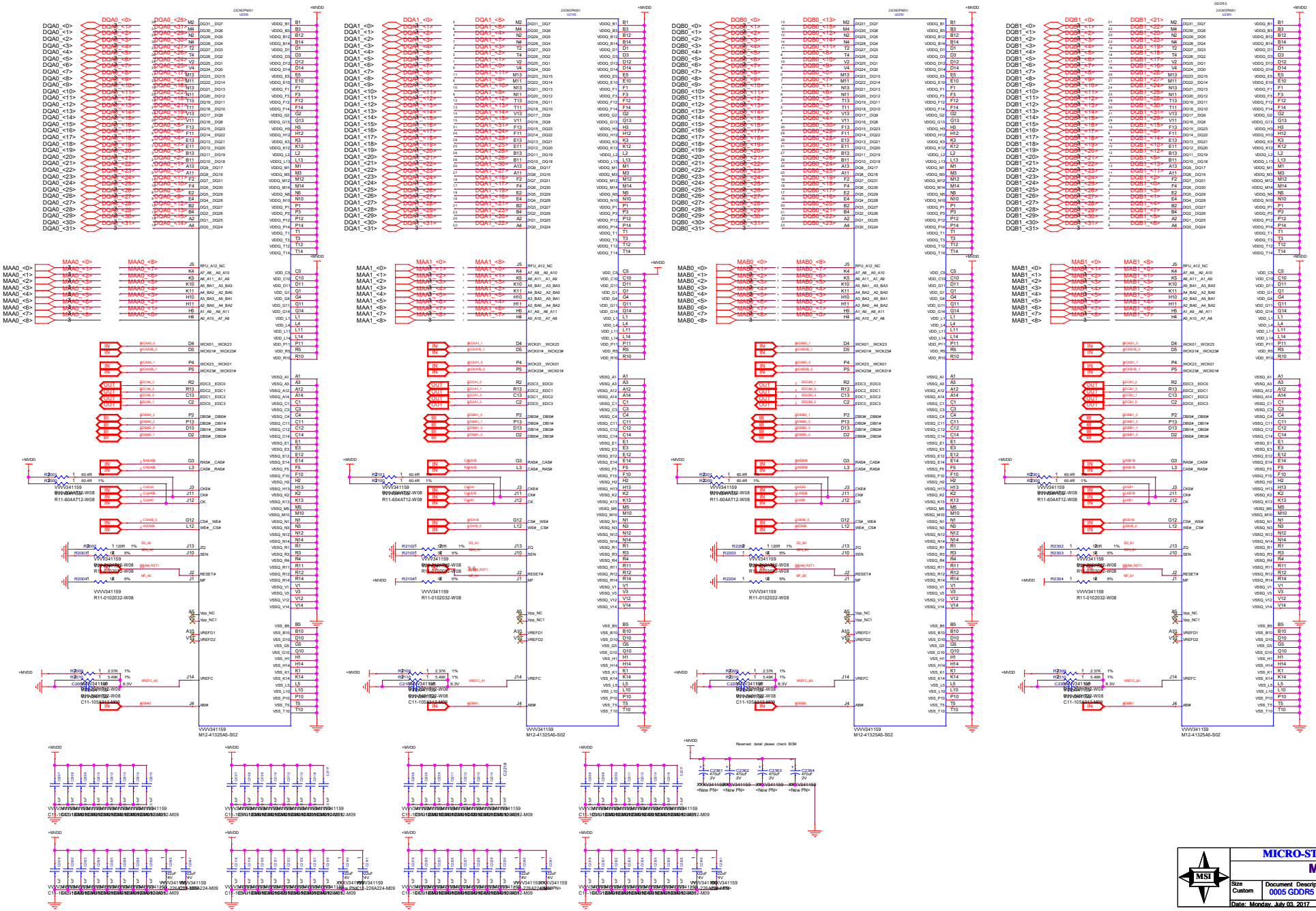

(6) GDDR5 MEMORY CH C/D

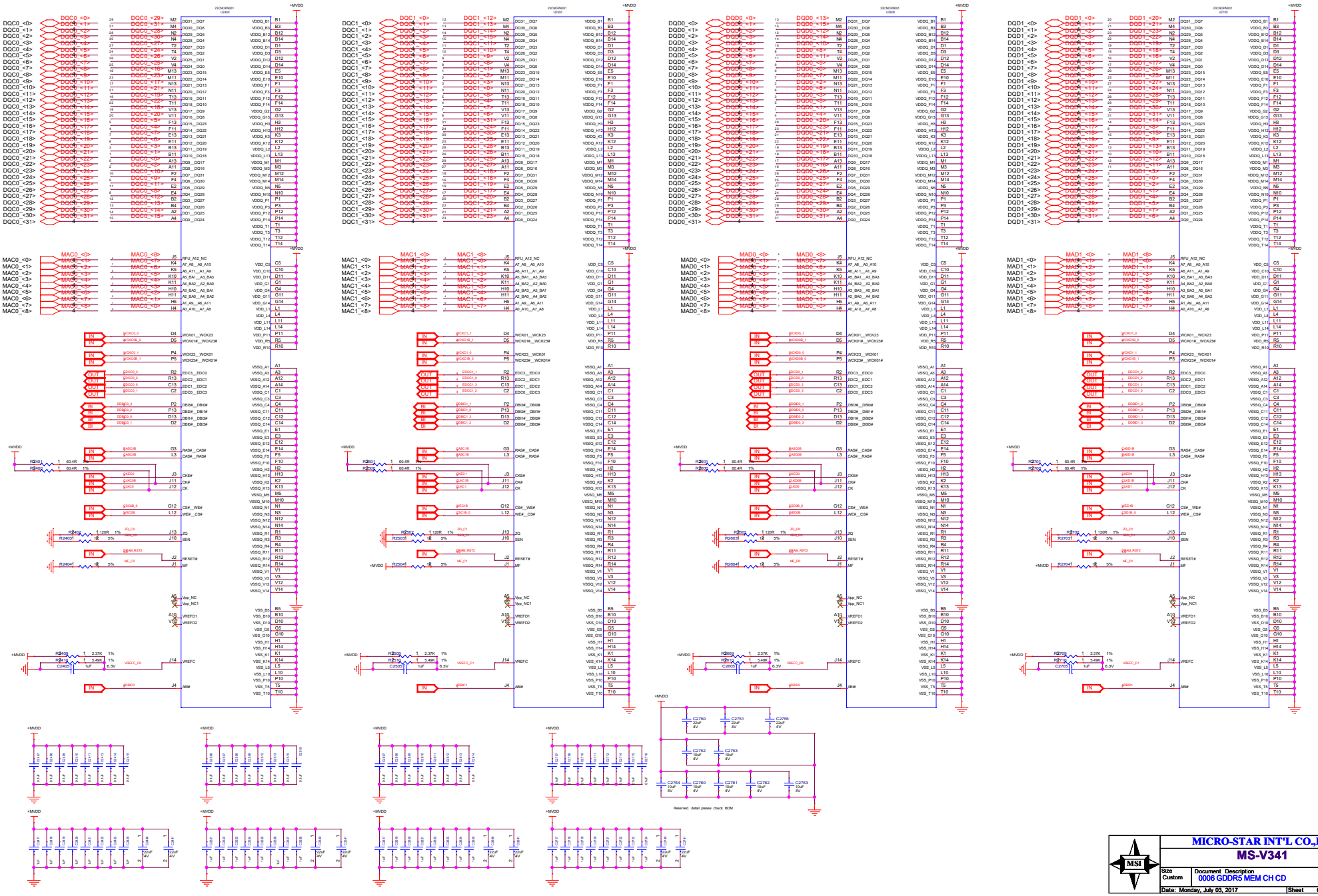

MICRO-STAR INT'L CO.,LTD			
MS-V341			
Size: Custom	Document Description: 0006 GDDR5 MEM CH CD		Rev: 2.2
Date: Monday, July 03, 2017		Sheet 6 of 26	

(7) ELLESMERE GPIO STRAP CF XTAL

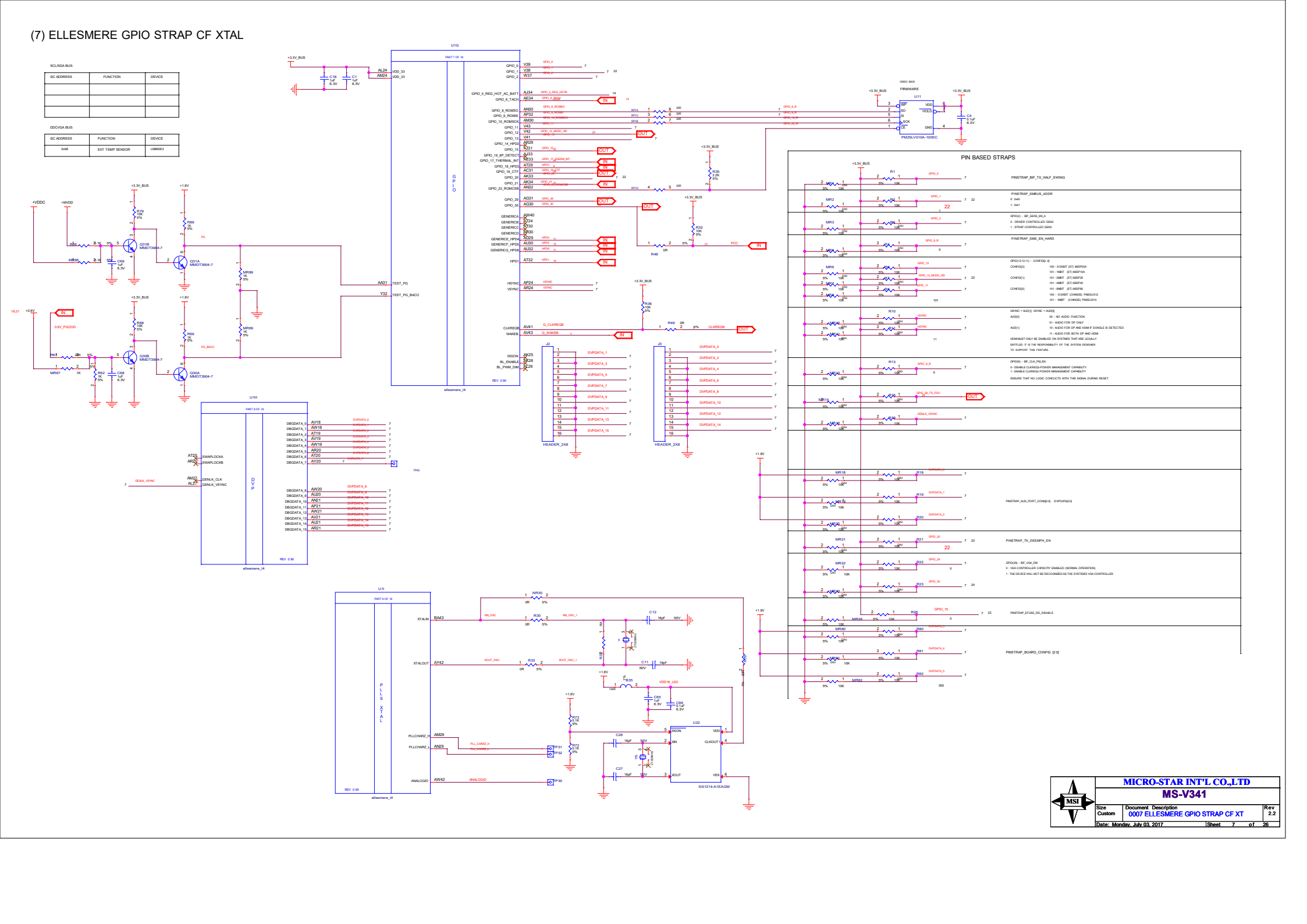

(8) ELLESMERE DAC1 LOCK

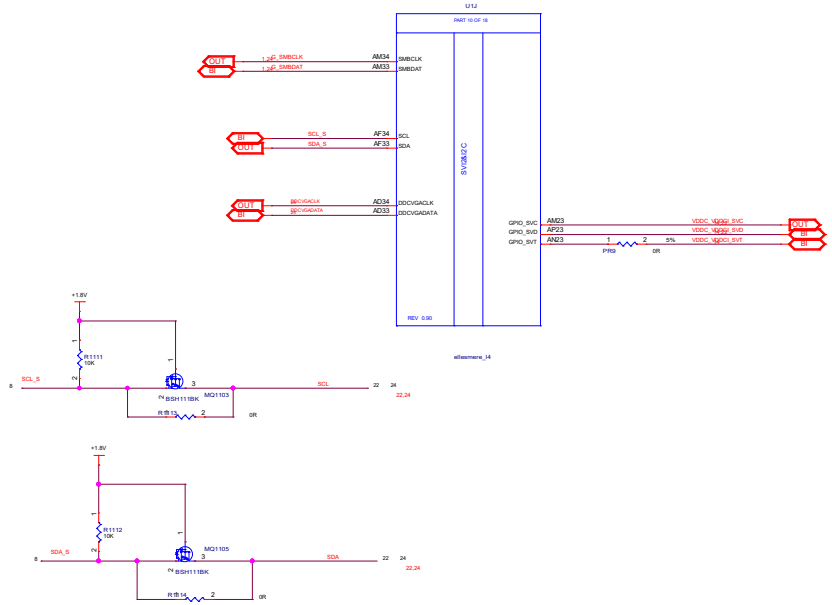

MICRO-STAR INT'L CO.,LTD		
MS-V341		
Size: Custom	Document Description: 0008 ELLESMERE SVI2&I2C	Rev: 2.2
Date: Monday, July 03, 2017	Sheet 8 of 26	

(9) ELLESMERE TMDP A/B

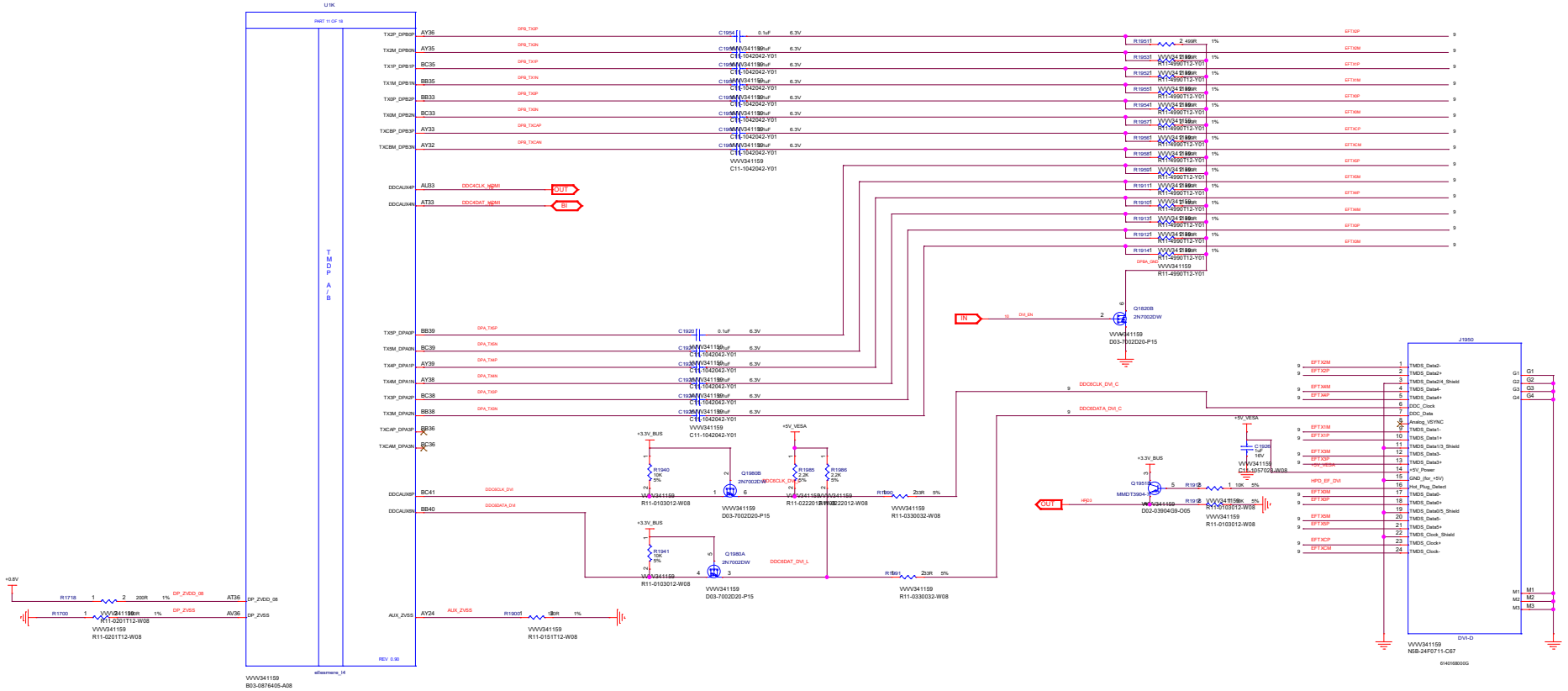

OPTIONAL ESD PROTECTION DIODES

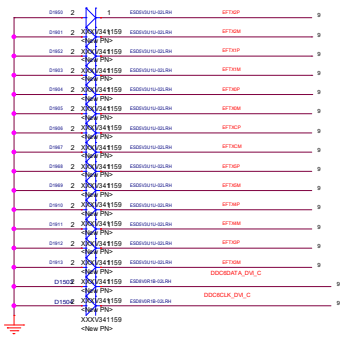

MICRO-STAR INT'L CO.,LTD		
MS-V341		
Size: Custom	Document Description: 0009 ELLESMERE TMDPAB dDVI	Rev: 2.2
Date: Monday, July 03, 2017	Sheet 9 of 26	

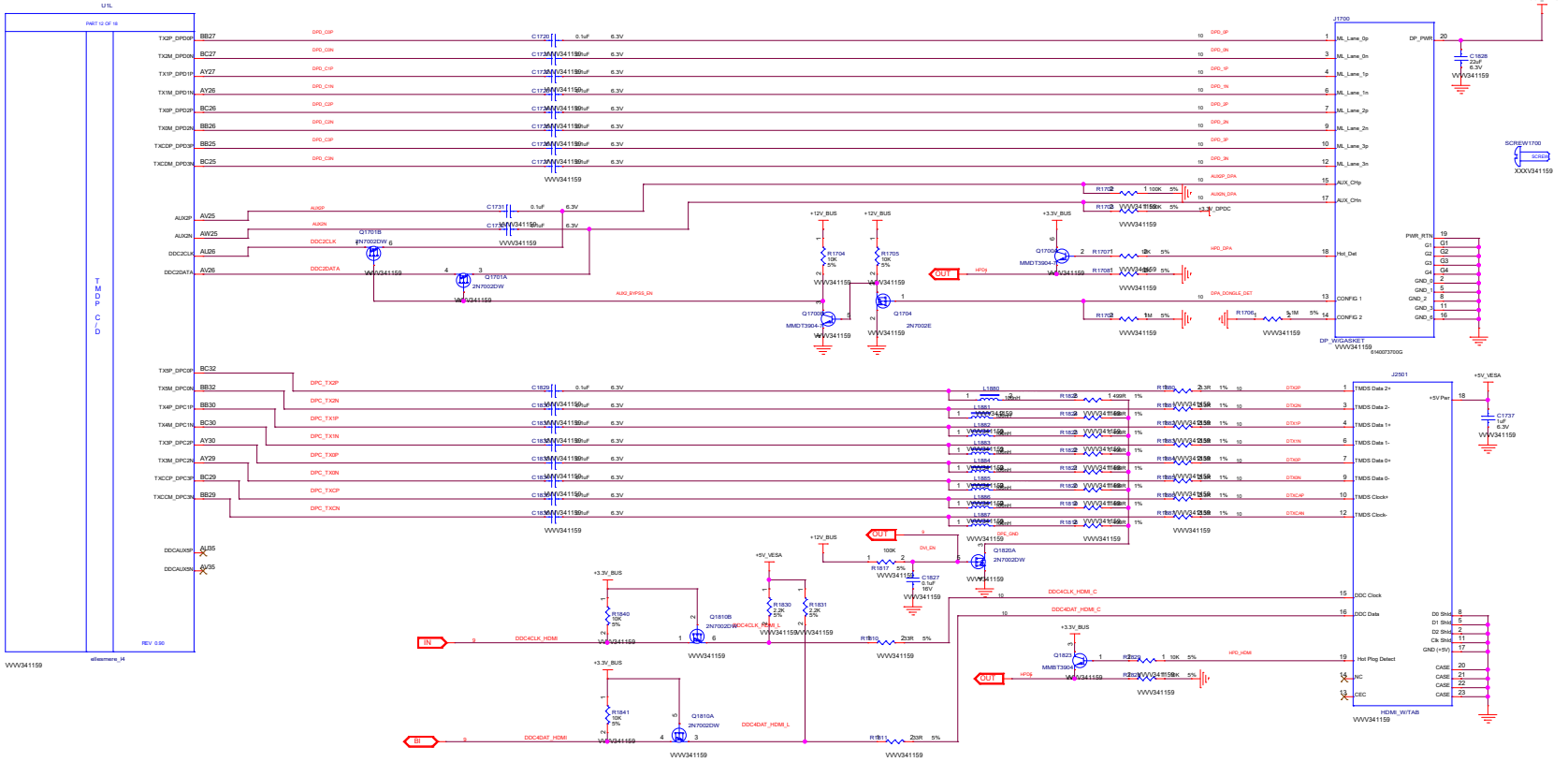

MICRO-STAR INT'L CO.,LTD		
MS-V341		
Size: Custom	Document Description: 0010 ELLESMERE TMDPCD DP HDMI	Rev: 2.2
Date: Monday, July 03, 2017	Sheet 10 of 26	

(11) ELLESMERE LVTMDP E/F

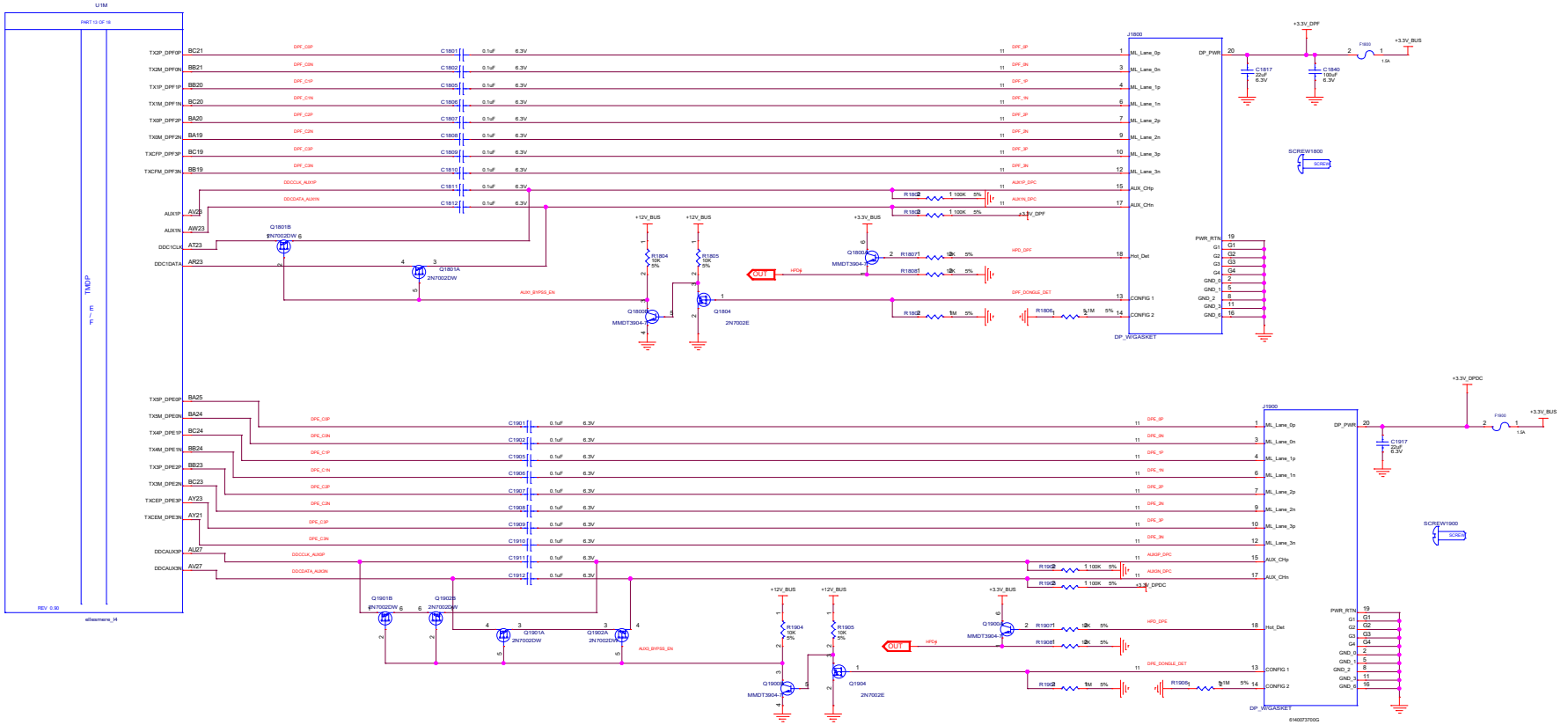

OPTIONAL ESD PROTECTION DIODES

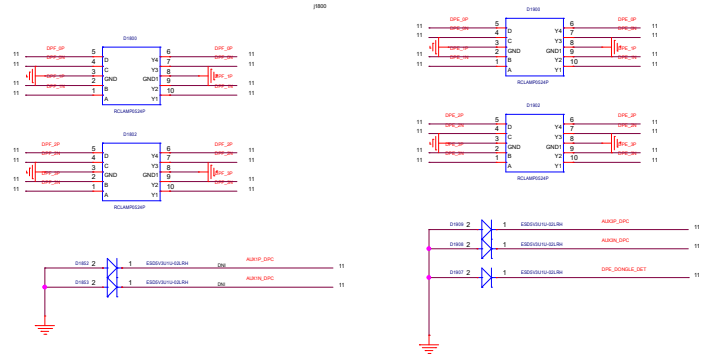

MICRO-STAR INT'L CO.,LTD	
MS-V341	
Size: Custom	Document Description: 0011 ELLESMERE TMDPEF DP DP
Rev: 2.2	
Date: Monday, July 03, 2017	Sheet 11 of 26

(12) ELLESMERE POWER

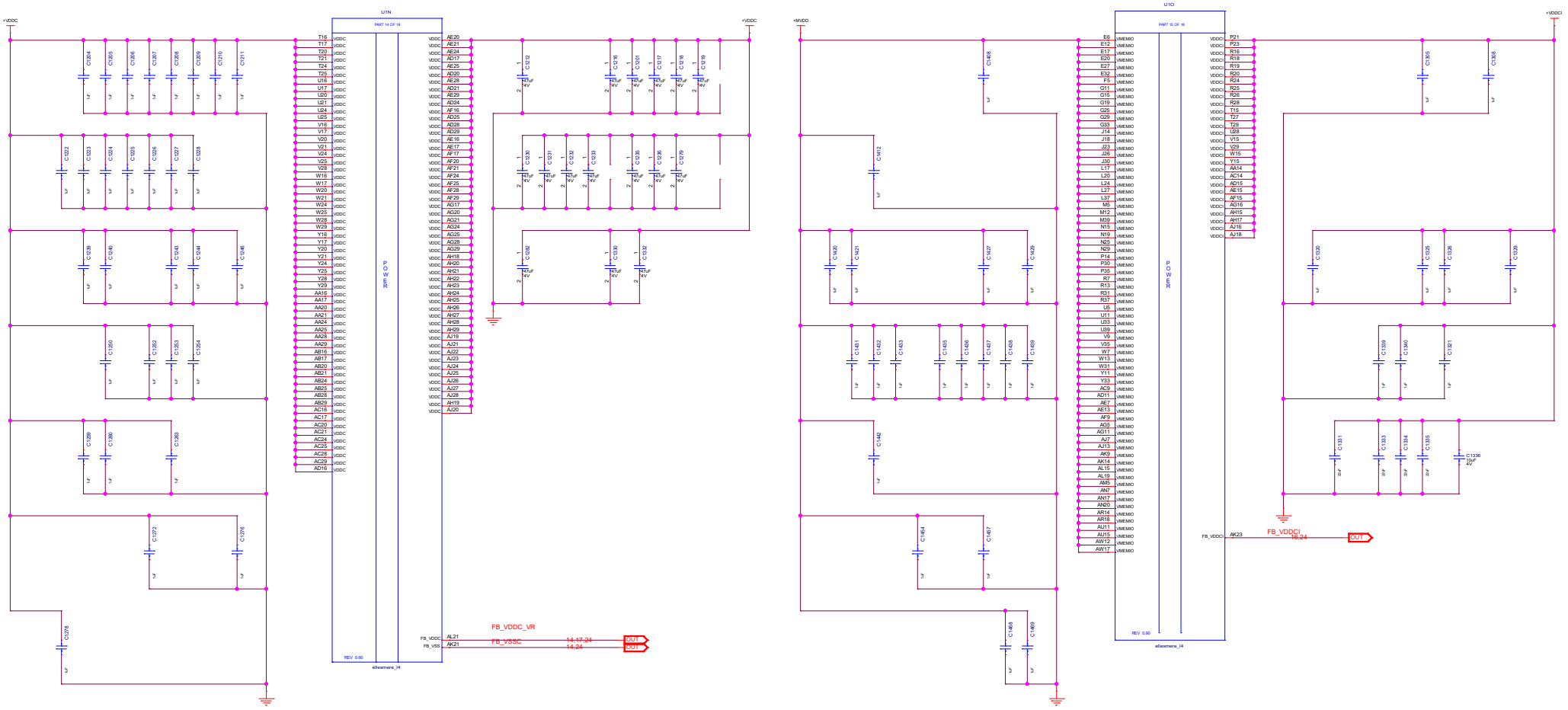

MICRO-STAR INT'L CO.,LTD		
MS-V341		
Size: Custom	Document Description: 0012 ELLESMERE POWER	Rev: 2.2
Date: Monday, July 03, 2017	Sheet 12 of 26	

(13) ELLESMERE GROUND

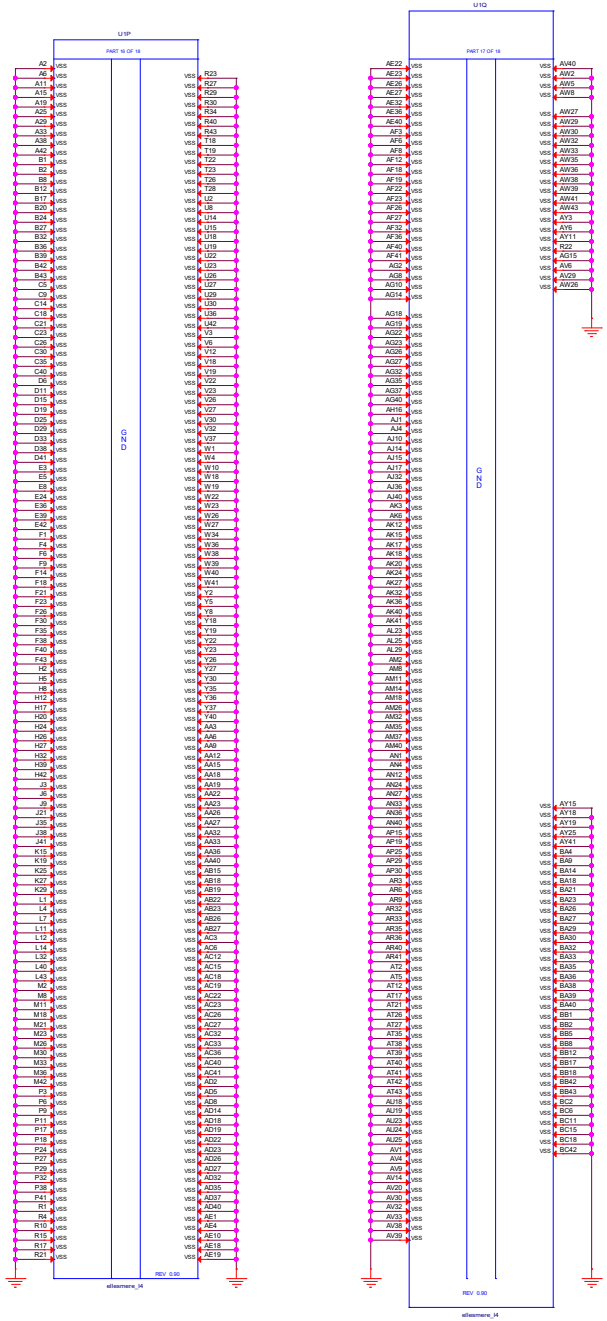

MICRO-STAR INT'L CO.,LTD	
MS-V341	
Size: Custom	Document Description: 0013 ELLESMERE GND
Rev: 2.2	
Date: Monday, July 03, 2017	Sheet 13 of 26

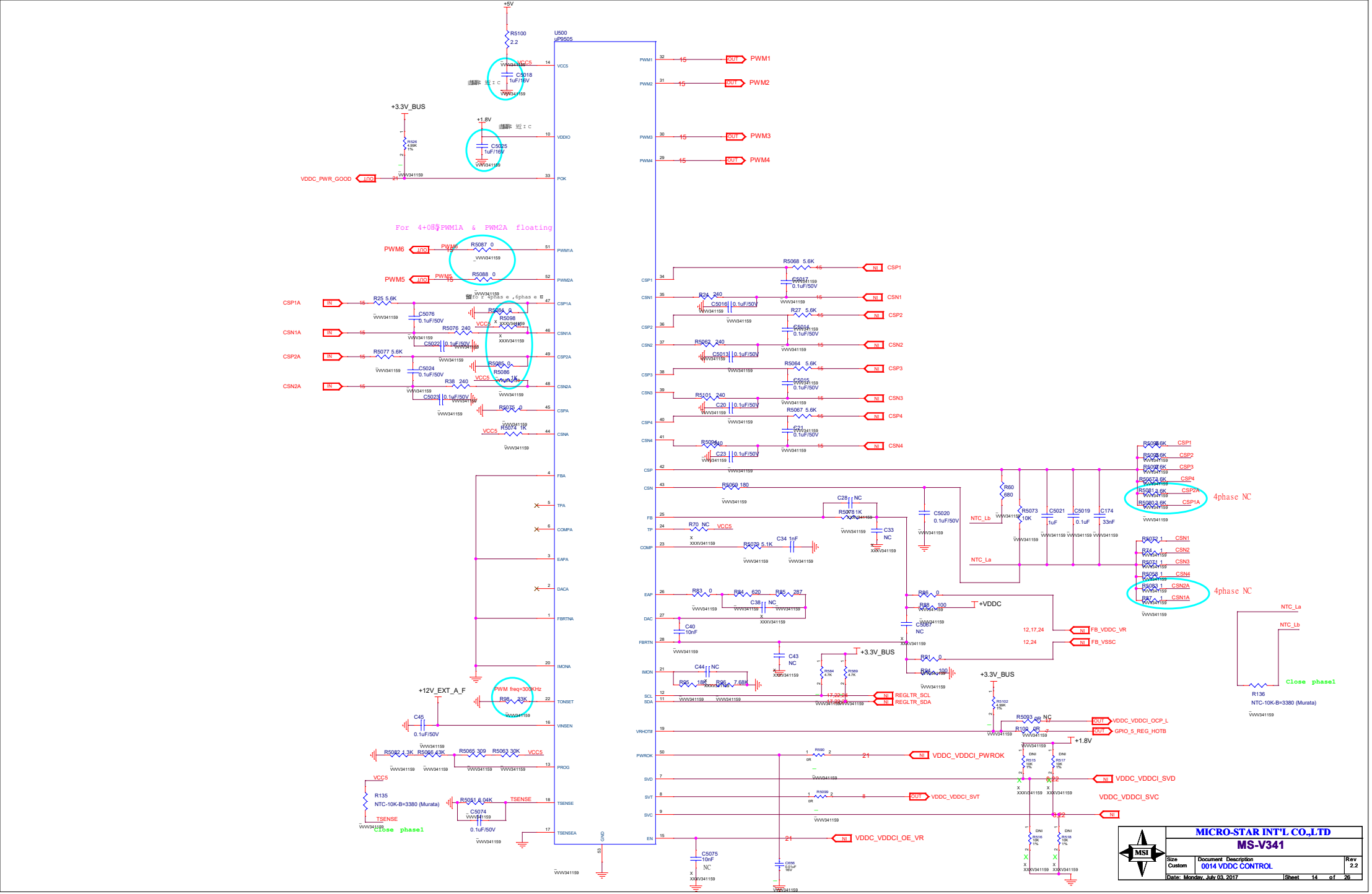

U500
uP9505
+5V
R5100
2.2
VCC5
C5018
1uF/16V
+3.3V_BUS
+1.8V
C5025
1uF/16V
VDDC_PWR_GOOD
POK
For 4+0時PWM1A & PWM2A floating
PWM6
PWM5
R5087 0
R5088 0
PWM1A
PWM2A
CSP1A
CSN1A
CSP2A
CSN2A
R25 5.6K
C5076
0.1uF/50V
R5076 240
C5022
0.1uF/50V
R5077 5.6K
C5024
0.1uF/50V
R38 240
C5023
0.1uF/50V
R5084 0
R5098
R5085 0
R5086 1K
R5075 0
R5074 1K
CSP1
CSN1
CSP2
CSN2
CSP3
CSN3
CSP4
CSN4
R5068 5.6K
C5017
0.1uF/50V
R24 240
C5016
0.1uF/50V
R27 5.6K
C5014
0.1uF/50V
R5062 240
C5013
0.1uF/50V
R5064 5.6K
C5015
0.1uF/50V
R5101 240
C20
0.1uF/50V
R5067 5.6K
C21
0.1uF/50V
R5094 240
C23
0.1uF/50V
CSP
CSN
R5069 180
FB
TP
COMP
EAP
DAC
FBRTN
IMON
SCL
SDA
VRHOT#
PWROK
SVD
SVT
SVC
EN
GND
FBA
TPA
COMPA
EAPA
DACA
FBRTNA
IMONA
TONSET
VINSEN
PROG
TSENSE
TSENSEA
R70 NC
R5079 5.1K
C34 1nF
C28 NC
R5078 1K
C33 NC
C5020
0.1uF/50V
R60
680
R5073
10K
C5021
1uF
C5019
0.1uF
C174
33nF
NTC_Lb
NTC_La
R5072 1
R74 1
R5071 1
R5058 1
R5083 1
R87 1
CSN1
CSN2
CSN3
CSN4
CSN2A
CSN1A
4phase NC
R83 0
R84 620
R85 287
C38 NC
C40
10nF
R86 0
R88 100
+VDDC
C5067
NC
R91 0
R94 100
FB_VDDC_VR
FB_VSSC
12,17,24
12,24
C43
NC
+3.3V_BUS
C44 NC
R95 18K
R96 7.68K
REGLTR_SCL
REGLTR_SDA
R5093 NC
R100 0R
VDDC_VDDCI_OCP_L
GPIO_5_REG_HOTB
+1.8V
R5082 1.3K
R5066 43K
R5065 309
R5063 30K
R5051 6.04K
C5074
0.1uF/50V
R135
NTC-10K-B=3380 (Murata)
Close phase1
+12V_EXT_A_F
PWM freq=300KHz
R98 33K
C45
0.1uF/50V
R5090 0R
VDDC_VDDCI_PWROK
VDDC_VDDCI_SVD
VDDC_VDDCI_SVT
VDDC_VDDCI_SVC
VDDC_VDDCI_OE_VR
C5075
10nF
NC
R136
NTC-10K-B=3380 (Murata)
MICRO-STAR INT'L CO.,LTD
MS-V341
Size
Custom
Document Description
0014 VDDC CONTROL
Rev
2.2
Date: Monday, July 03, 2017
Sheet 14 of 26

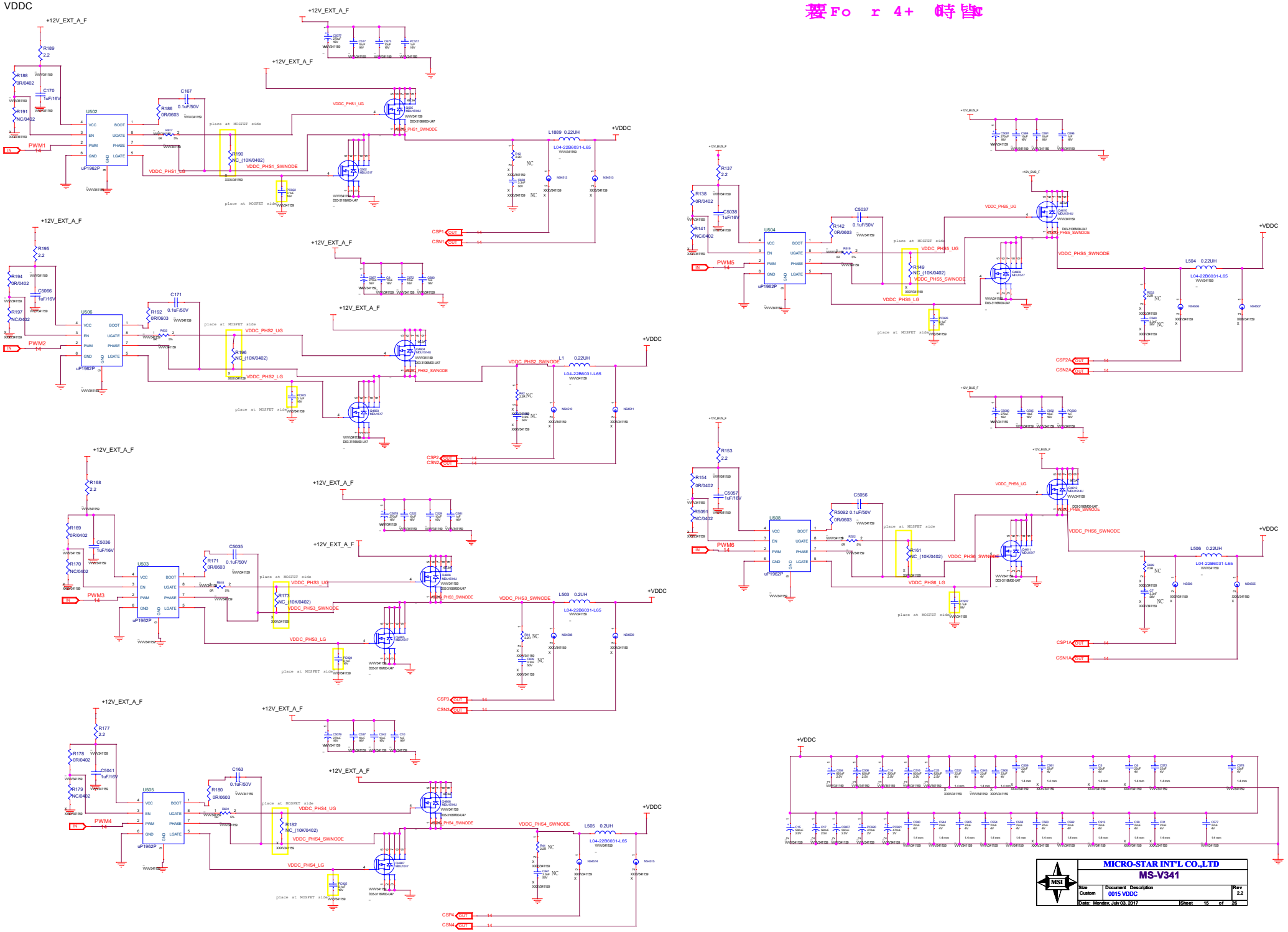
VDDC
+12V_EXT_A_F
+VDDC
PWM1
PWM2
PWM3
PWM4
PWM5
PWM6
U502
U503
U504
U505
U506
U508
uP1962P
L1889 0.22UH
L1 0.22UH
L503 0.2UH
L505 0.2UH
L504 0.22UH
L506 0.22UH
L04-22B6031-L65
place at MOSFET side
VDDC_PHS1_UG
VDDC_PHS1_SWNODE
VDDC_PHS1_LG
VDDC_PHS2_UG
VDDC_PHS2_SWNODE
VDDC_PHS2_LG
VDDC_PHS3_UG
VDDC_PHS3_SWNODE
VDDC_PHS3_LG
VDDC_PHS4_UG
VDDC_PHS4_SWNODE
VDDC_PHS4_LG
VDDC_PHS5_UG
VDDC_PHS5_SWNODE
VDDC_PHS5_LG
VDDC_PHS6_UG
VDDC_PHS6_SWNODE
VDDC_PHS6_LG
CSP1
CSN1
CSP2
CSN2
CSP3
CSN3
CSP4
CSN4
CSP1A
CSN1A
CSP2A
CSN2A
MICRO-STAR INT'L CO.,LTD
MS-V341
Size
Custom
Document Description
0015 VDDC
Rev
2.2
Date: Monday, July 03, 2017
Sheet 15 of 26

PLACE NEAR HALF BRIDGE

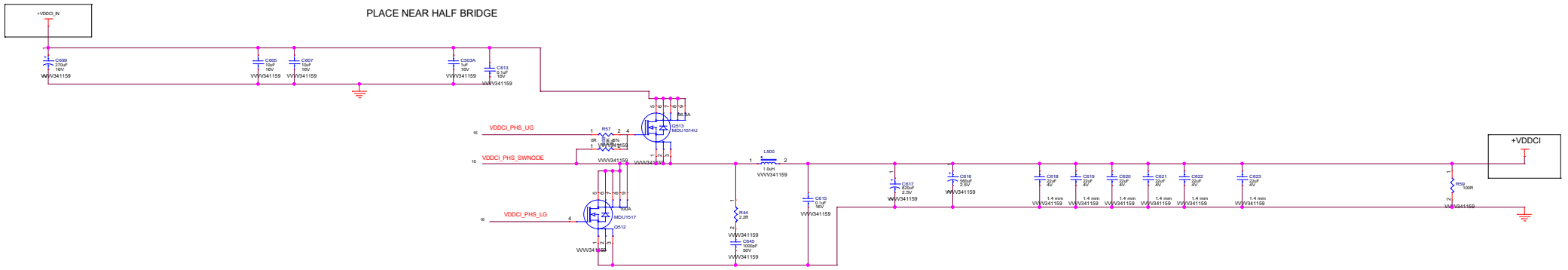

PLACE NEXT TO VDDCI PHASE INDUCTOR

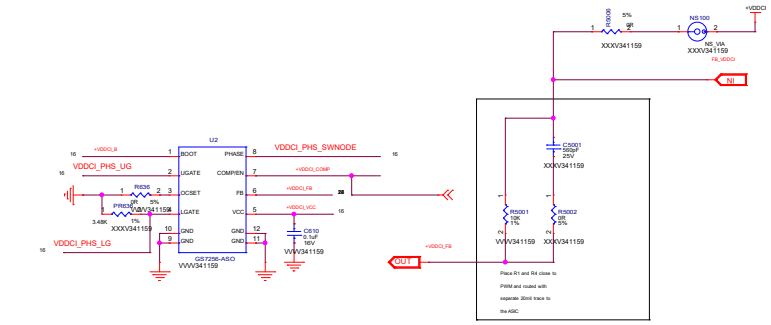

COMPENSATION CIRCUIT

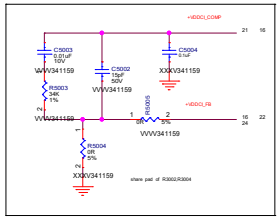

FILTERED SMPS VCC

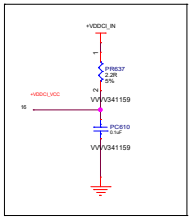

BOOT CIRCUIT

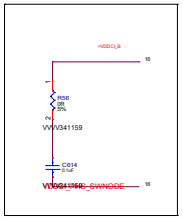

REGULATOR FOR VPVCC RAILS

IOUT MAX = 500mA

MSI	MICRO-STAR INT'L CO.,LTD	
	MS-V341	
Size: Custom	Document Description: 0016 VDDCI	Rev: 2.2
Date: Monday, July 03, 2017	Sheet 16 of 26	

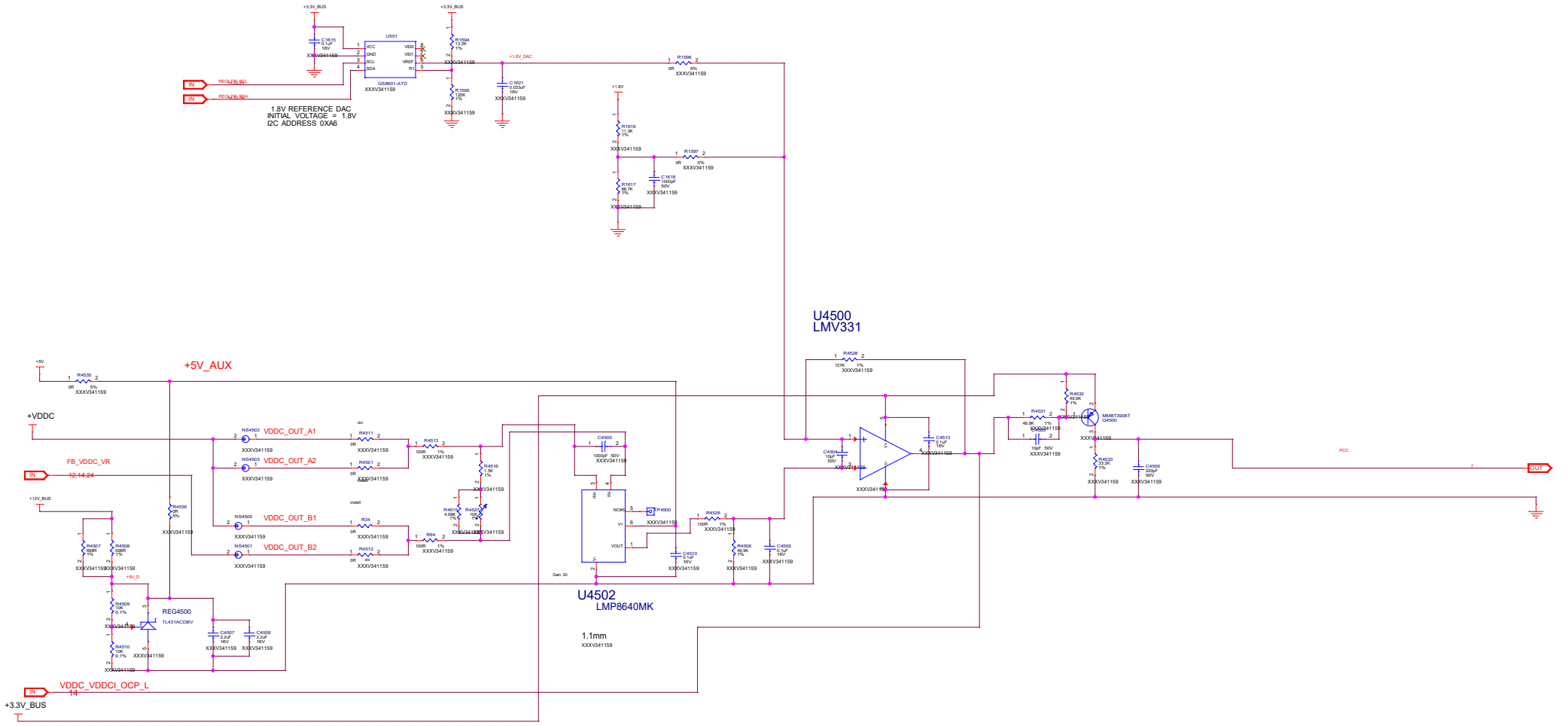

MICRO-STAR INT'L CO.,LTD		
MS-V341		
Size: Custom	Document Description: 0017 PCC VDDC	Rev: 2.2
Date: Monday, July 03, 2017	Sheet 17 of 26	

(16) MVDD

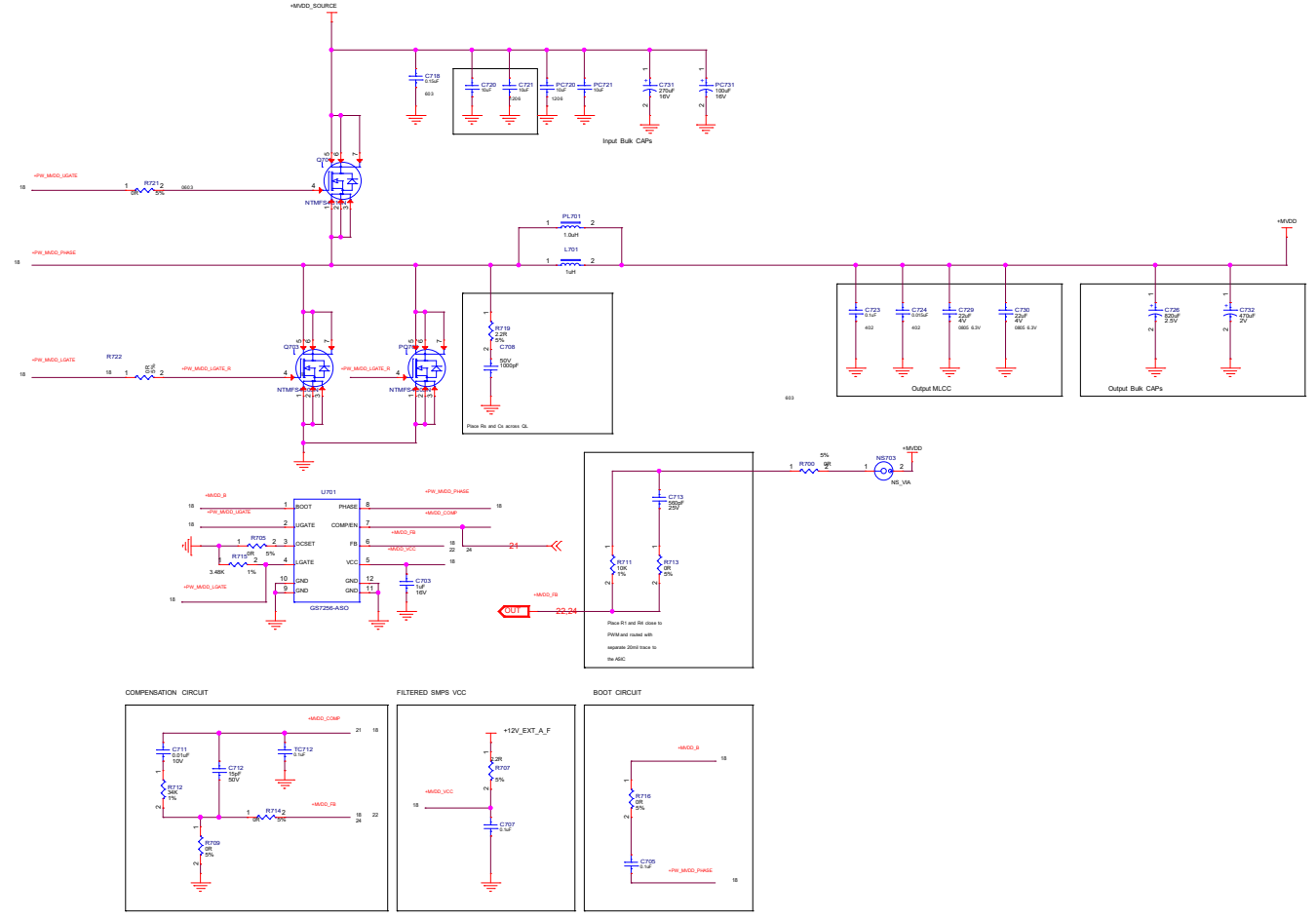

MICRO-STAR INT'L CO.,LTD		
MS-V341		
Size: Custom	Document Description: 0018 MVDD	Rev: 2.2
Date: Monday, July 03, 2017	Sheet 18 of 26	

(17) 0.95V

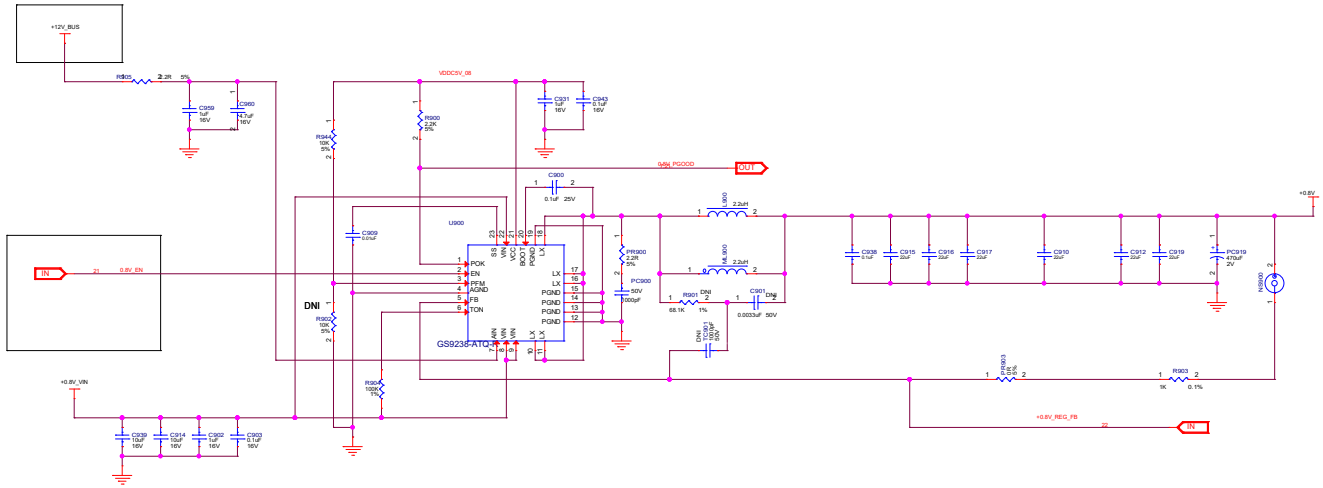

MSI	MICRO-STAR INT'L CO.,LTD	
	MS-V341	
Size: Custom	Document Description: 0019 0.8V REG	Rev: 2.2
Date: Monday, July 03, 2017	Sheet 19 of 26	

(18) SMALL RAIL REGULATORS

LDO #1: VIN = 3.0V TO 3.6V MAX VOUT = +1.8V +/- 2% IOUT = 1.3A RMS MAX

PCB: 50 TO 70mm SQ. COPPER AREA FOR COOLING

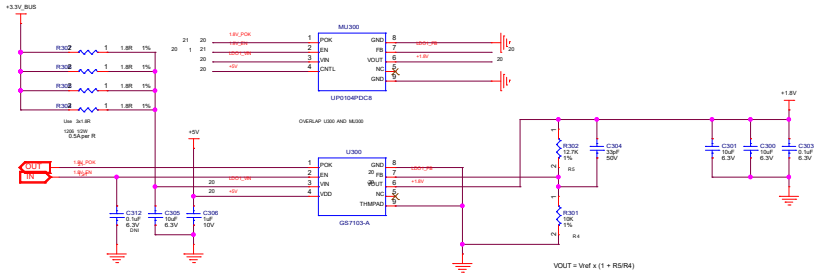

REGULATOR FOR +5V RAILS

IOUT MAX = 150mA

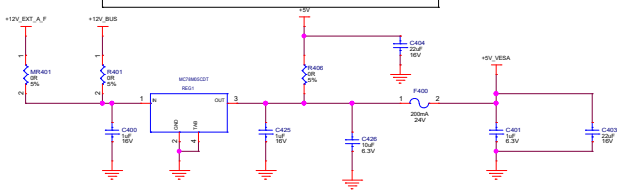

MICRO-STAR INT'L CO.,LTD		
MS-V341		
Size: Custom	Document Description: 0020 SMALL RAIL REGULATORS	Rev: 2.2
Date: Monday, July 03, 2017	Sheet 20 of 26	

(19) POWER MANAGEMENT

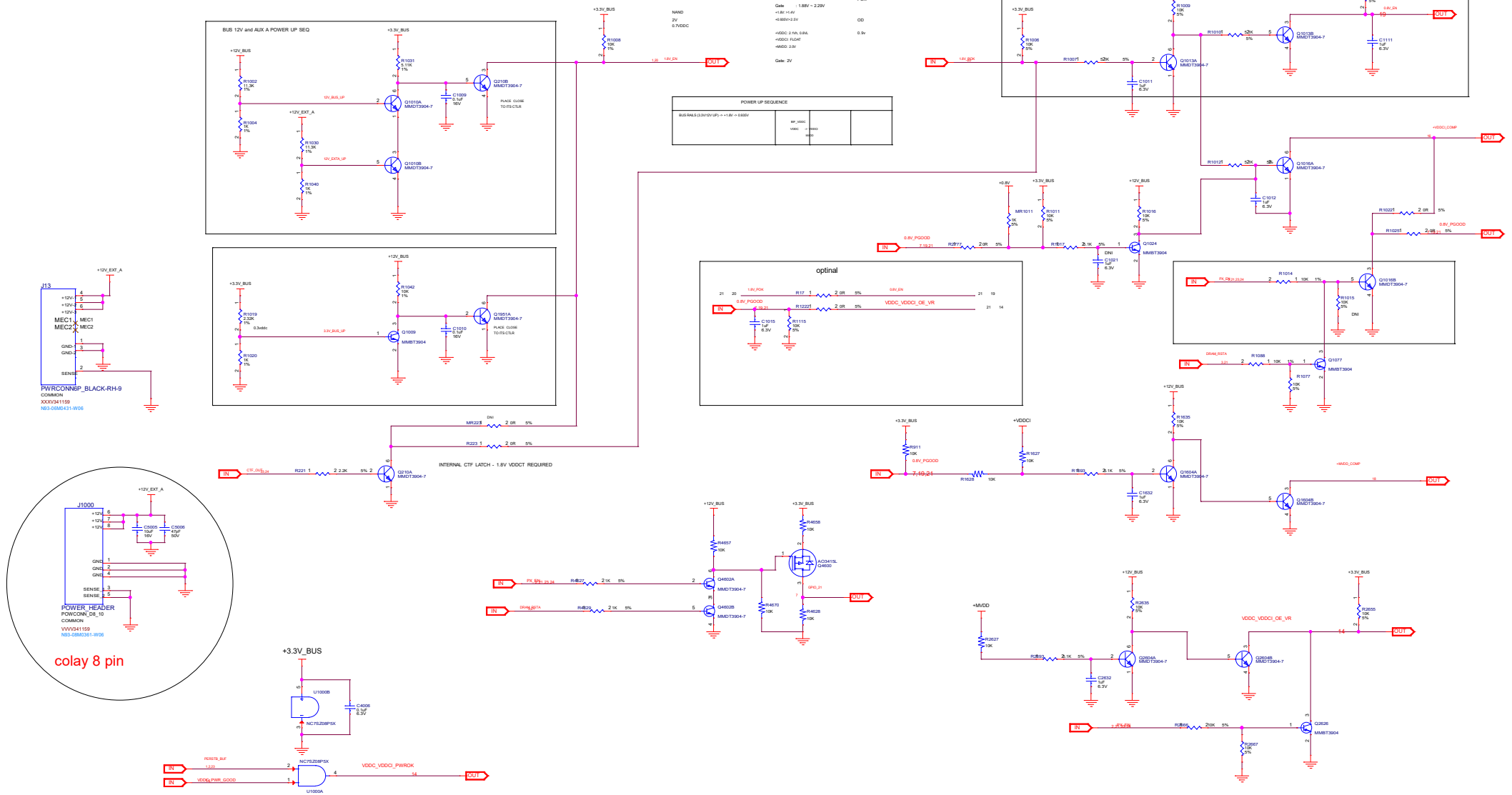

MICRO-STAR INT'L CO.,LTD	
MS-V341	
Size: Custom	Document Description: 0021 POWER MANAGEMENT1
Rev: 2.2	
Date: Monday, July 03, 2017	Sheet 21 of 26

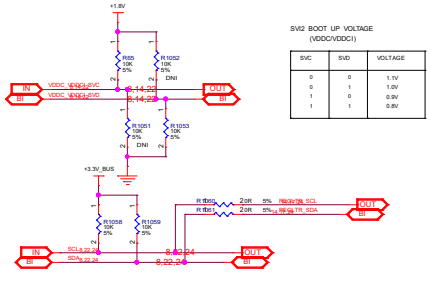

SVI2 BOOT UP VOLTAGE
(VDDC/VDDCI)

SVC	SVD	VOLTAGE
0	0	1.1V
0	1	1.0V
1	0	0.9V
1	1	0.8V

+12V_BUS INPUT

+12V_EXT_A INPUT

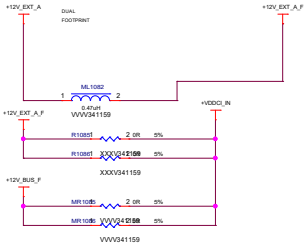

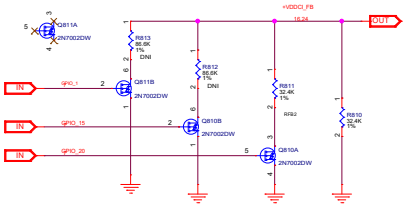

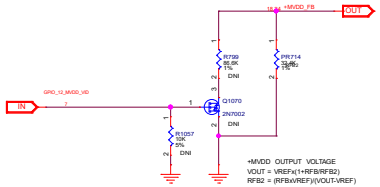

+MVDD OUTPUT VOLTAGE
VOUT = VREF(1+RFB/RFB2)
RFB2 = (RFBxVREF)/(VOUT-VREF)

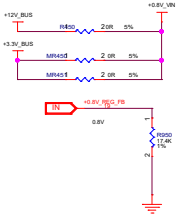

(20) MECHANICAL AND THERMAL MANAGEMENT

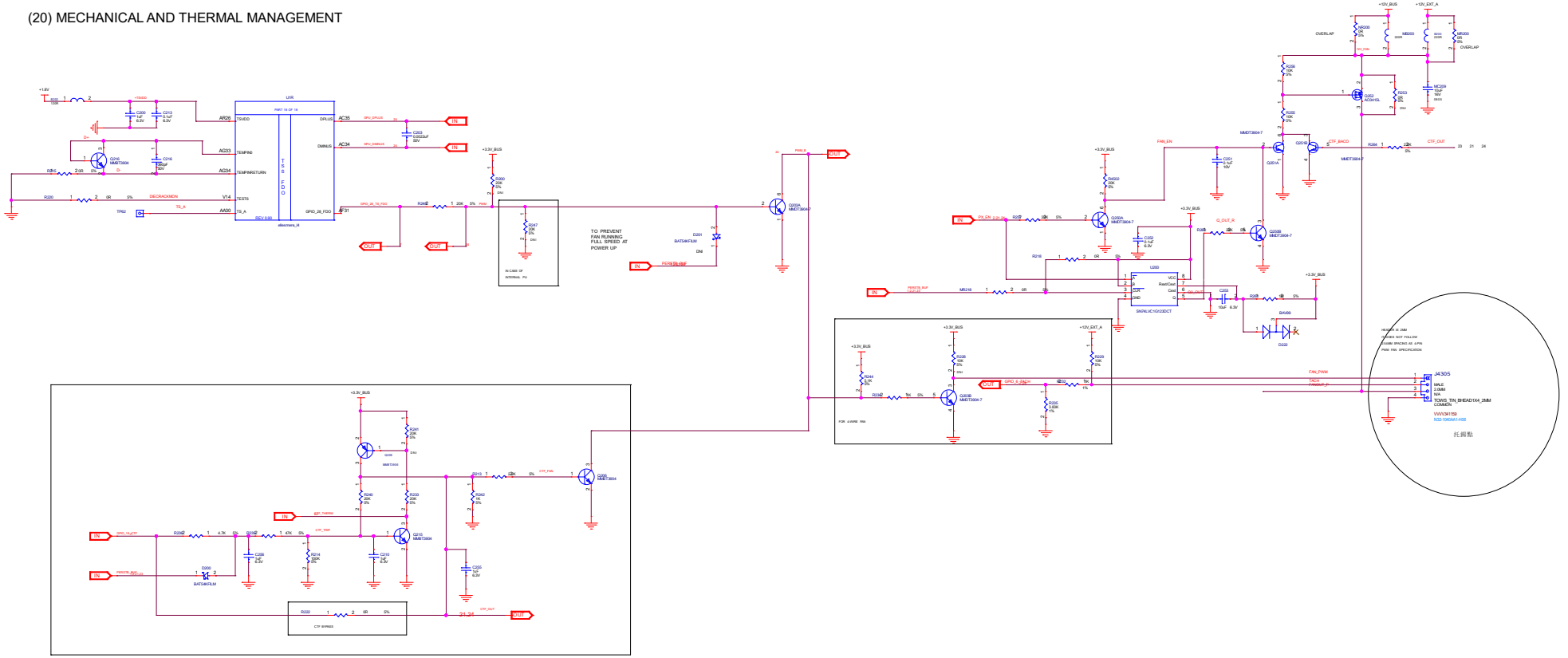

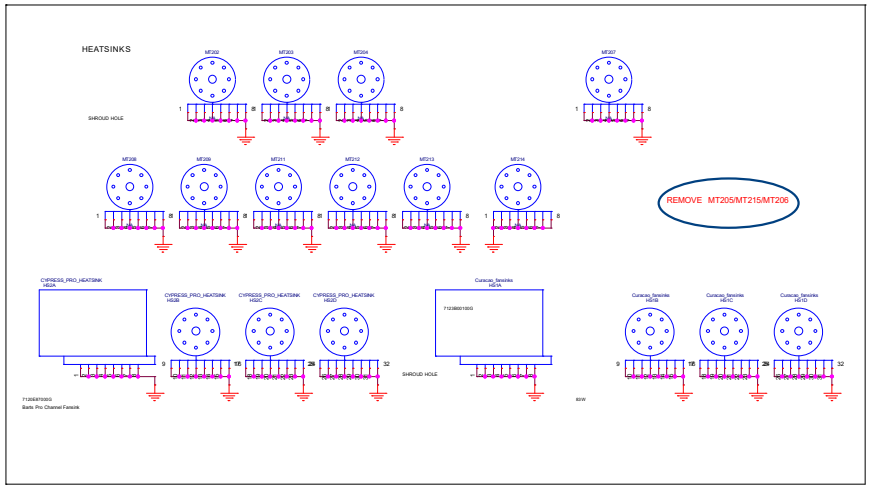

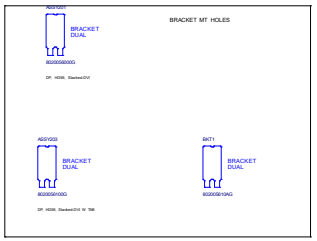

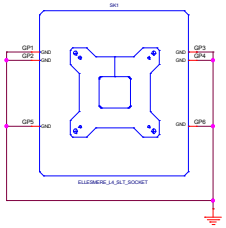

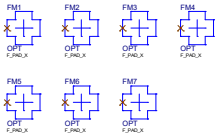

MSI	MICRO-STAR INT'L CO.,LTD	
	MS-V341	
Size: Custom	Document Description: 0023 MECHANICAL AND THERMAL	Rev: 2.2
Date: Monday, July 03, 2017	Sheet 23 of 26	

(21) DEBUG CIRCUITS

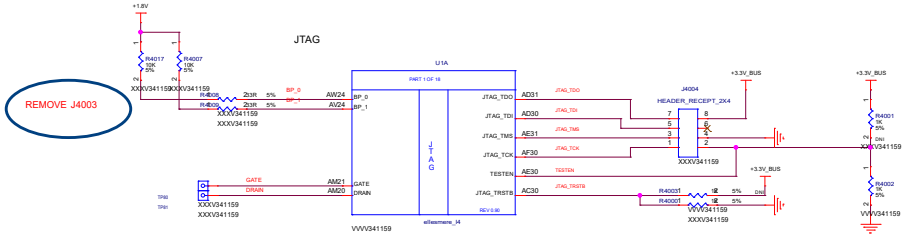

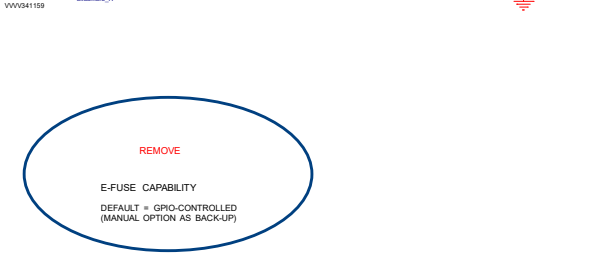

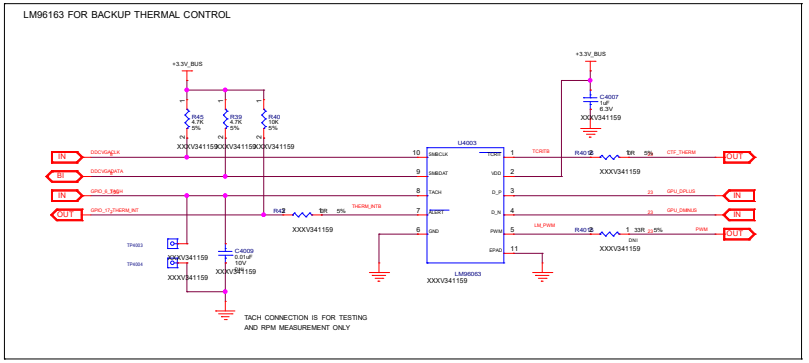

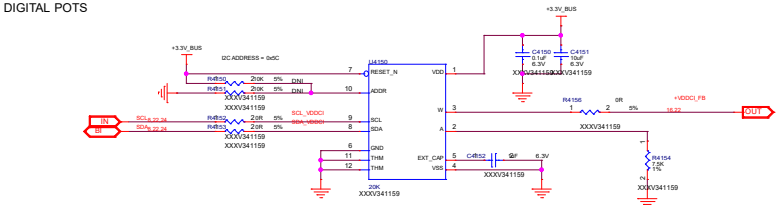

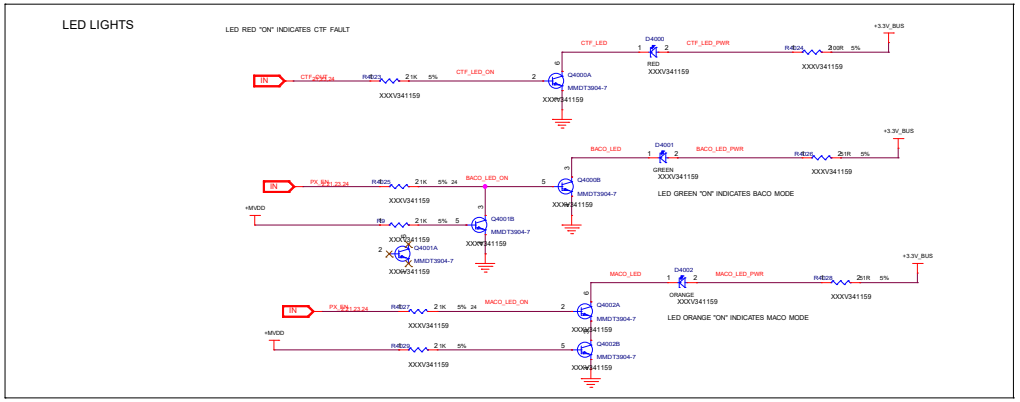

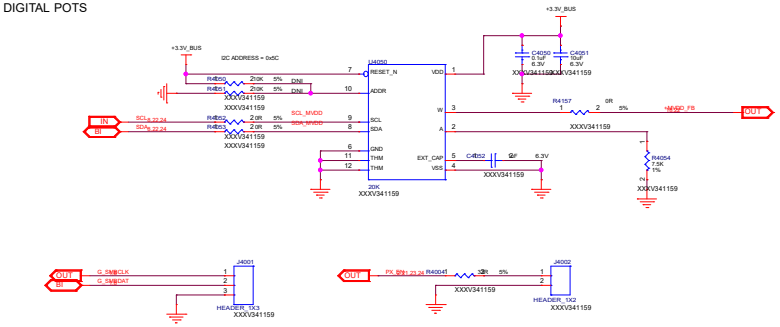

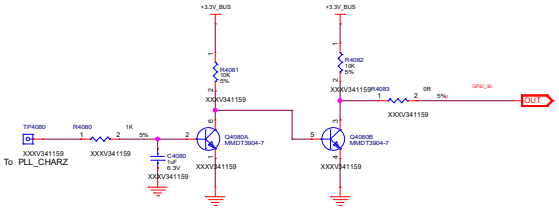

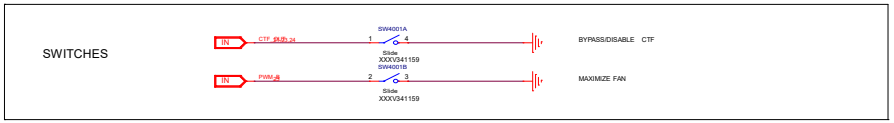

MSI	MICRO-STAR INT'L CO.,LTD	
	MS-V341	
Size: Custom	Document Description: 0024DEBUG CIRCUITS/ E-FUSE	Rev: 2.2
Date: Monday, July 03, 2017	Sheet 24 of 26	

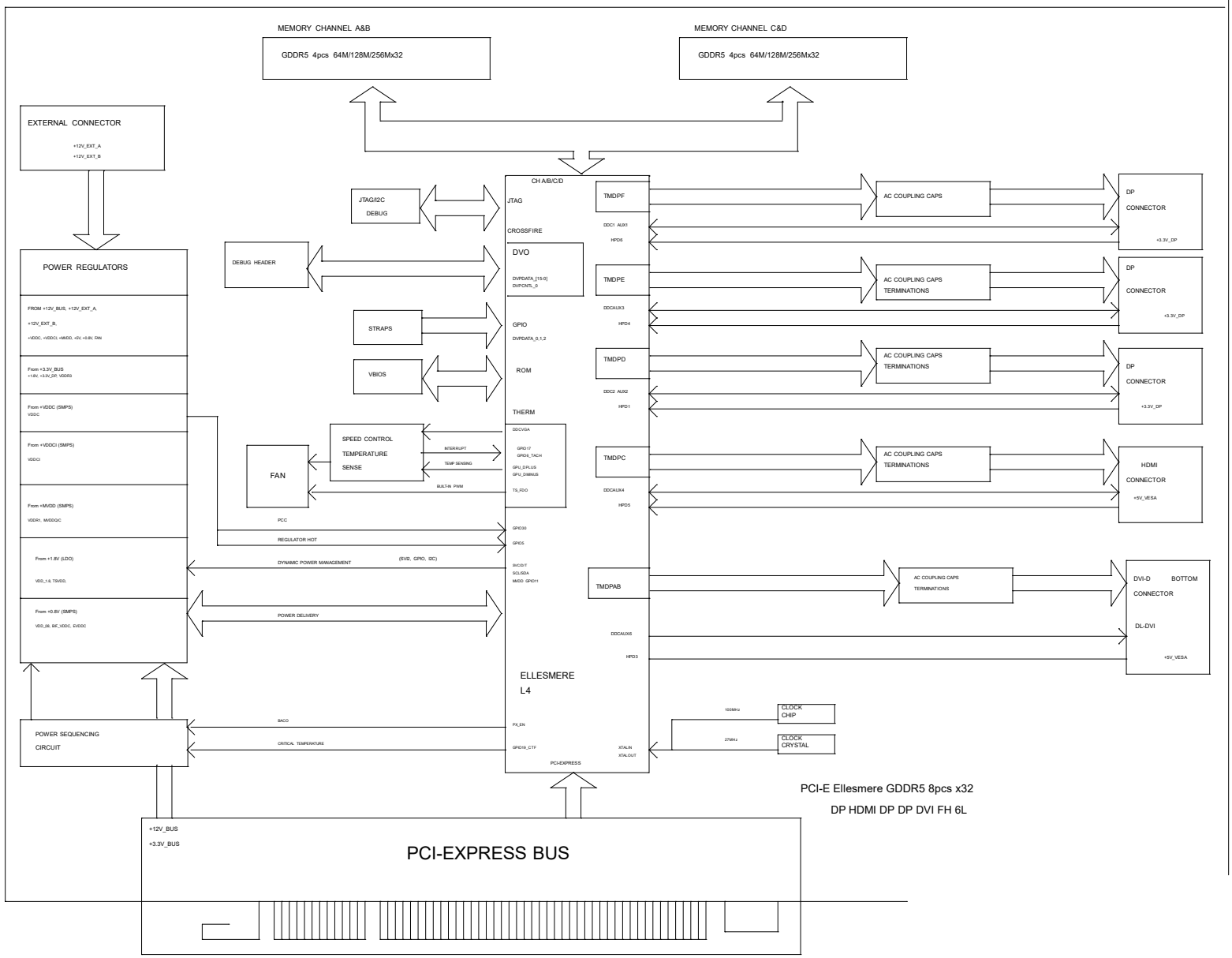

PCI-E Ellesmere GDDR5 8pcs x32

DP HDMI DP DP DVI FH 6L

MSI	MICRO-STAR INT'L CO.,LTD	
	MS-V341	
Size: Custom	Document Description: 0025BLOCK DIAGRAM	Rev: 2.2
Date: Monday, July 03, 2017	Sheet 25 of 26	

23: EXT 6 PIN change to 反 向 8 pin
REMOVE MT205/MT215/MT206

26: 1*4 托錫 點

15: C522 from pwm5 change to pwm4
PWM4 power from +12V_BUS_F change to 12V_EXT_A_F
PWM4 from VPVCC_BUS change to VPVCC_EXT
Remove C927/C3/C579/C576/C575/C574
Add PC920/PC921

24: REMOVE J4003
REMOVE E-FUSE CAPABILITY