C116-B, NV18B/NV31/NV34, 8MX16DDR, 64MB, VIDEO OUT, VGA

Page Overview

1 C116B PAGE OVERVIEW

2 NV18B AGP Section and AGP connector

3 NV18B FRAME BUFFER Interface

4 MEMORY 64MB, 8Mx16DDR Bits 0..31

5 MEMORY 64MB, 8Mx16DDR Bits 32..63

6 NV18B STRAPPING, I/O Interface & BIOS, FAN CONNECTOR

7 NV18B DACA, DACB output, SYNC amplifier & PLL Section

8 PRIMARY DISPLAY Filter and Connector

9 NV18 TMDS Power, VIDEO OUT CONNECTOR

10 POWER SUPPLY & A3V3 & FBVDDQ & NVVDD & FBVDD

11 MECHANICS

HISTORY:

A00

A00: INITIAL VERSION

01: Request PCB P/N.
02: Check the value for DDR serial resistor (0 ohm or 15 ohm).
03: Check R2287, R2288 need mount or not.

ALL NVIDIA DESIGN SPECIFICATIONS, REFERENCE BOARDS, FILES, DRAWINGS, DIAGNOSTICS, LISTS AND OTHER DOCUMENTS(TOGETHER AND SEPARATELY, "MATERIALS") ARE BEING PROVIDED "AS IS".
NVIDIA MAKES NO WARRANTIES, EXPRESSED, IMPLIED, STATUTORY OR OTHERWISE WITH RESPECT TO THE MATERIALS, AND EXPRESSLY DISCLAIMS ALL IMPLIED WARRANTIES OF NONINFRINGEMENT, MERCHANTABILITY AND FITNESS FOR A PARTICULAR PURPOSE.

Micro-Star International Co., LTD.

MS-8917-A00

Size: Custom | Document Number: TOP PAGE | Rev: A00

Date: Monday, February 10, 2003 | Sheet 1 of 11

NV18 AGP SECTION AND AGP CONNECTOR

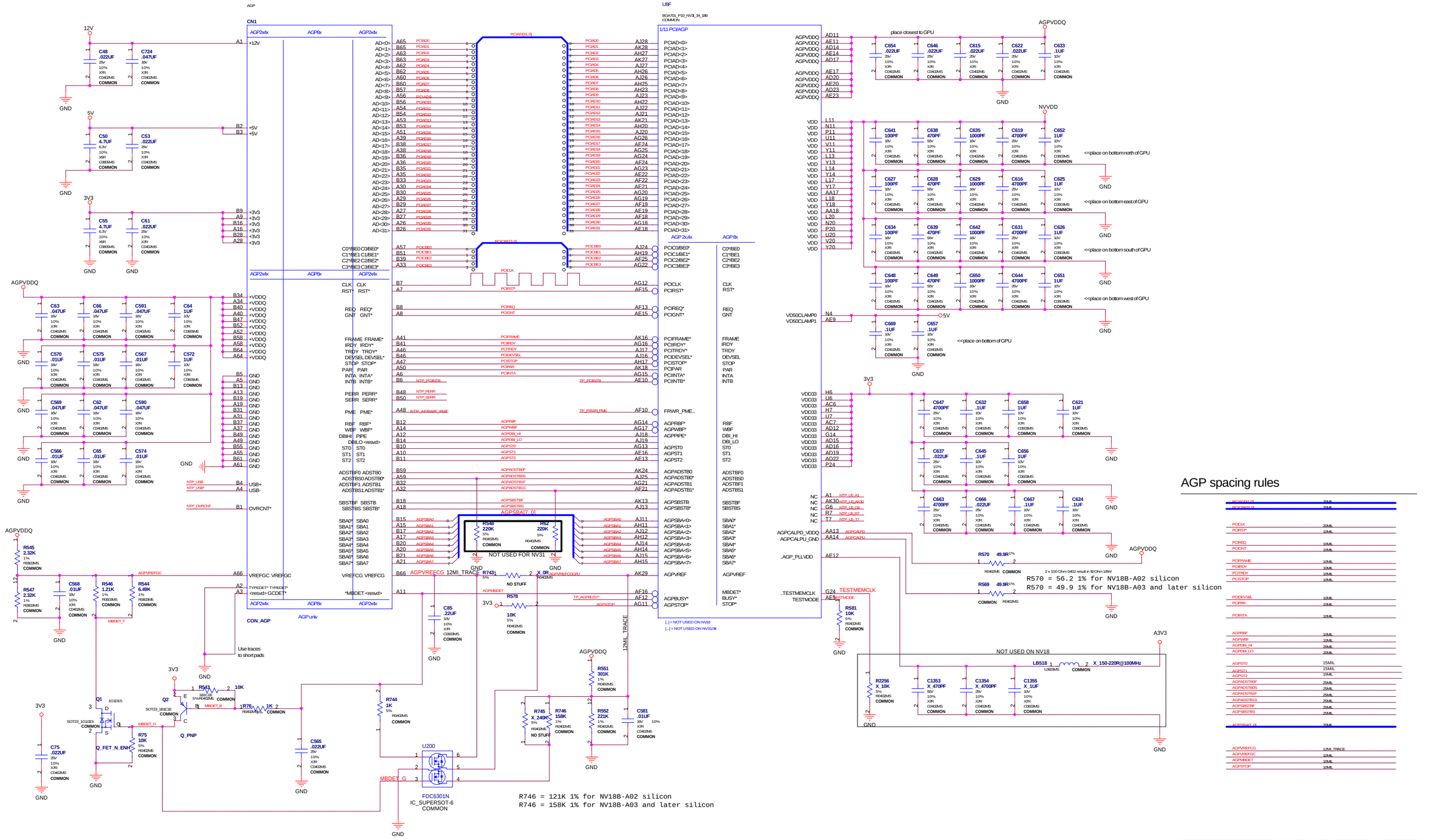

Micro-Star International Co., LTD.	
MS-8917-A00	
Size: Custom	Document Number: AGP INTERFACE
Rev: A00	
Date: Monday, February 10, 2003	Sheet 2 of 11

NV18 FRAMEBUFFER INTERFACE AND DECOUPLING

{4,5} FBD[63..0]

U8B
BGA701_P10_NV31_34_18B
COMMON
2/11 MEM_A

FBAD<0> FBAD<1> FBAD<2> FBAD<3> FBAD<4> FBAD<5> FBAD<6> FBAD<7> FBAD<8> FBAD<9> FBAD<10> FBAD<11> FBAD<12> FBAD<13> FBAD<14> FBAD<15> FBAD<16> FBAD<17> FBAD<18> FBAD<19> FBAD<20> FBAD<21> FBAD<22> FBAD<23> FBAD<24> FBAD<25> FBAD<26> FBAD<27> FBAD<28> FBAD<29> FBAD<30> FBAD<31> FBAD<32> FBAD<33> FBAD<34> FBAD<35> FBAD<36> FBAD<37> FBAD<38> FBAD<39> FBAD<40> FBAD<41> FBAD<42> FBAD<43> FBAD<44> FBAD<45> FBAD<46> FBAD<47> FBAD<48> FBAD<49> FBAD<50> FBAD<51> FBAD<52> FBAD<53> FBAD<54> FBAD<55> FBAD<56> FBAD<57> FBAD<58> FBAD<59> FBAD<60> FBAD<61> FBAD<62> FBAD<63>

{4} FBDQM0 {4} FBDQM1 {4} FBDQM2 {4} FBDQM3 {5} FBDQM4 {5} FBDQM5 {5} FBDQM6 {5} FBDQM7 — FBADQM<0> FBADQM<1> FBADQM<2> FBADQM<3> FBADQM<4> FBADQM<5> FBADQM<6> FBADQM<7>

{4} FBDQS0 {4} FBDQS1 {4} FBDQS2 {4} FBDQS3 {5} FBDQS4 {5} FBDQS5 {5} FBDQS6 {5} FBDQS7 — FBADQS<0> FBADQS<1> FBADQS<2> FBADQS<3> FBADQS<4> FBADQS<5> FBADQS<6> FBADQS<7>

FBADQS<0>_ FBADQS<1>_ FBADQS<2>_ FBADQS<3>_ FBADQS<4>_ FBADQS<5>_ FBADQS<6>_ FBADQS<7>_

{4,5} FBAA0 {4,5} FBAA1 {4,5} FBAA2 {4,5} FBAA3 {4,5} FBAA4 {4,5} FBAA5 {4,5} FBAA6 {4,5} FBAA7 {4,5} FBAA8 {4,5} FBAA9 {4,5} FBAA10 {4,5} FBAA11 — FBAA<0> FBAA<1> FBAA<2> FBAA<3> FBAA<4> FBAA<5> FBAA<6> FBAA<7> FBAA<8> FBAA<9> FBAA<10> FBAA<11> FBAA<12>_

{4,5} FBABA0 {4,5} FBABA1 — FBABA<0> FBABA<1>

{4,5} FBARAS* {4,5} FBACAS* {4,5} FBAWE* {4,5} FBACS0* — FBARAS FBACAS FBAWE FBACS0

{4,5} FBACKE — FBACKE

{5} FBACLK0 {5} FBACLK0* {4} FBACLK1 {4} FBACLK1* — FBACLK0 FBACLK0 FBACLK1 FBACLK1

FBVREF — FB_VREF

FBVDDQ: F8 G8 F11 G11 F14 F17 F20 G20 F23 G23 H24 L24 Y24 AC24 H25 L25 P25 U25 Y25 AC25

..FB_DLLVDD — C27

GND: F1 J1 M1 T1 W1 AB1 AE1 C3 G3 K3 N3 AH3 D4 AG4 E5 K5 AA5 AF5 A6 F6 AE6 AK6 C7 J7 AH7 E8 L8 Y8 AF8 A9 AK9 C10 AH10 E11 H11 AC11 AF11 A12 AK12 C13 AH13 E14 AF14 AK15 AH16 E17 AF17 AH18 A19 AK19 E20 H20 AC20 AF20 C21 AH21 A22 AK22 E23 L23 Y23 AF23 C24 AH24 A25 F25 AE25 AK25 H26 L26 P26 U26 Y26 AC26 AF26 AG27 D28 G28 K28 N28 V28 AA28 AD28 AH28 F30 J30 M30 W30 AB30 AE30

FBVDDQ

C603 4700PF 25V 10% X7R C0402MS COMMON
C609 .022UF 25V 10% X7R C0402MS COMMON
C618 .1UF 10V 10% X7R C0402MS COMMON
C643 .1UF 10V 10% X7R C0402MS COMMON
C611 4700PF 25V 10% X7R C0402MS COMMON
C612 .022UF 25V 10% X7R C0402MS COMMON
C617 .1UF 10V 10% X7R C0402MS COMMON
C630 4700PF 25V 10% X7R C0402MS COMMON
C623 .022UF 25V 10% X7R C0402MS COMMON
C636 .1UF 10V 10% X7R C0402MS COMMON
C610 .1UF 10V 10% X7R C0402MS COMMON
C664 4700PF 25V 10% X7R C0402MS COMMON
C653 .022UF 25V 10% X7R C0402MS COMMON
C640 .1UF 10V 10% X7R C0402MS COMMON
C604 .1UF 10V 10% X7R C0402MS COMMON
C588 1UF 10V 10% X7R C0603MS COMMON
C688 1UF 10V 10% X7R C0603MS COMMON
C592 1UF 10V 10% X7R C0603MS COMMON

GND

NOT USED ON NV18

LB520 1 2 X_150-220R@100MHz NO STUFF FB_DLLVDD1
LB519 1 2 X_150-220R@100MHz NO STUFF FB_DLLVDD A3V3
C1356 X_470PF 25V 10% X7R C0402MS NO STUFF
C1357 X_4700PF 25V 10% X7R C0402MS NO STUFF
C1358 X_1UF 10V 10% X7R C0603MS NO STUFF

GND

FB DLL SUPPLY FOR NV31/NV34

5V
U1002 X_YLT1087S-0.8A
VIN VOUT VOUT ADJ
C1360 X_1UF 10V 10% X7R C0603MS NO STUFF
C1361 X_1UF 10V 10% X7R C0603MS NO STUFF
R2281 X_200R_1% NOT STUFF 1% R0603MS
R2282 X_332R_1% NOT STUFF 1% R0603MS
FB_DLLVDD1
GND

FBVDDQ
R554 1K 5% R0402MS COMMON
C597 .1UF 10V 10% X7R C0402MS COMMON
R553 1K 5% R0402MS COMMON
GND

[..] = NOT USED ON NV38
[..] = USED FOR DDR2ONLY

U8C
BGA701_P10_NV31_34_18B
COMMON
3/11 MEM_C

FBCD<0> FBCD<1> FBCD<2> FBCD<3> FBCD<4> FBCD<5> FBCD<6> FBCD<7> FBCD<8> FBCD<9> FBCD<10> FBCD<11> FBCD<12> FBCD<13> FBCD<14> FBCD<15> FBCD<16> FBCD<17> FBCD<18> FBCD<19> FBCD<20> FBCD<21> FBCD<22> FBCD<23> FBCD<24> FBCD<25> FBCD<26> FBCD<27> FBCD<28> FBCD<29> FBCD<30> FBCD<31> FBCD<32> FBCD<33> FBCD<34> FBCD<35> FBCD<36> FBCD<37> FBCD<38> FBCD<39> FBCD<40> FBCD<41> FBCD<42> FBCD<43> FBCD<44> FBCD<45> FBCD<46> FBCD<47> FBCD<48> FBCD<49> FBCD<50> FBCD<51> FBCD<52> FBCD<53> FBCD<54> FBCD<55> FBCD<56> FBCD<57> FBCD<58> FBCD<59> FBCD<60> FBCD<61> FBCD<62> FBCD<63>

FBCDQM<0> FBCDQM<1> FBCDQM<2> FBCDQM<3> FBCDQM<4> FBCDQM<5> FBCDQM<6> FBCDQM<7>

FBCDQS<0> FBCDQS<1> FBCDQS<2> FBCDQS<3> FBCDQS<4> FBCDQS<5> FBCDQS<6> FBCDQS<7>

FBCDQS<8>_ FBCDQS<9>_ FBCDQS<10>_ FBCDQS<11>_ FBCDQS<12>_ FBCDQS<13>_ FBCDQS<14>_ FBCDQS<15>_

FBCA<0> FBCA<1> FBCA<2> FBCA<3> FBCA<4> FBCA<5> FBCA<6> FBCA<7> FBCA<8> FBCA<9> FBCA<10> FBCA<11> FBCA<12>_

FBCBA<0> FBCBA<1>

FBCRAS FBCCAS FBCWE FBCCS0 FBCCS1 FBCCKE

FBCCLK0 FBCCLK0 FBCCLK1 FBCCLK1

...VTT: G9 G12 G15 G16 G19 G22 J24 M24 R24 T24 W24 AB24 — NTP_VTT_01 NTP_VTT_02 NTP_VTT_03 NTP_VTT_04 NTP_VTT_05 NTP_VTT_06 NTP_VTT_07 NTP_VTT_08 NTP_VTT_09 NTP_VTT_10 NTP_VTT_11 NTP_VTT_12

...FBCAL_PD_VDDQ F5
...FBCAL_PU_GND E4
...FBCAL_TERM_GND D3
...FBCAL_CLK_GND E3

NOT USED ON NV18B

FBVDDQ
R2257 X_49.9R 1% NOT STUFF R0603MS
R2258 X_49.9R 1% NOT STUFF R0603MS
GND

TARGET RESISTANCE IS 550 OHM
1.2V / 550 ohm = 2.2 mA
R2259 X_549 1% R0603MS COMMON
R2260 X_10K 5% R0402MS COMMON
GND GND

GND_THERMAL: M12 N12 P12 R12 T12 U12 V12 W12 M13 N13 P13 R13 T13 U13 V13 W13 M14 N14 P14 R14 T14 U14 V14 W14 M15 N15 P15 R15 T15 U15 V15 W15 M16 N16 P16 R16 T16 U16 V16 W16 M17 N17 P17 R17 T17 U17 V17 W17 M18 N18 P18 R18 T18 U18 V18 W18 M19 N19 P19 R19 T19 U19 V19 W19

GND

[..] = NOT USED ON NV18
[..]= USED FOR DDR2ONLY

PIN DESCRIPTION	NV18B	NV31	NV34
FBCAL_TERM_GND	NOT USED	TIE TO GND	NOT USED
FBCAL_CLK_GND	NOT USED	550 OHM 1% TO GND	NOT USED
FBCAL_PU_GND	NOT USED	50 OHM 1% TO GND	50 OHM 1% TO GND
FBCAL_PD_VDDQ	NOT USED	50 OHM 1% TO FBVDDQ	50 OHM 1% TO FBVDDQ

ALL NVIDIA DESIGN SPECIFICATIONS, REFERENCE BOARDS, FILES, DRAWINGS, DIAGNOSTICS, LISTS AND OTHER DOCUMENTS(TOGETHER AND SEPARATELY, MATERIALS) ARE BEING PROVIDED 'AS IS'.
NVIDIA MAKES NO WARRANTIES, EXPRESSED, IMPLIED, STATUTORY OR OTHERWISE WITH RESPECT TO THE MATERIALS, AND EXPRESSLY DISCLAIMS ALL IMPLIED WARRANTIES OF NONINFRINGEMENT, MERCHANTABILITY AND FITNESS FOR A PARTICULAR PURPOSE.

Micro-Star International Co., LTD.
MS-8917-A00
Size: Custom | Document Number: FRAME BUFFER INTERFACE | Rev: A00
Date: Monday, February 10, 2003 | Sheet 3 of 11

Place component to memory

Memory decoupling

Place in memory section

By-pass caps for core transition

NET	Diffpair	NET_SPACING_RULE
{3,5} FBACLK0	FBACLK0*	18MIL_G2G_25MIL
{3,5} FBACLK0*	FBACLK0	18MIL_G2G_25MIL
{3} FBACLK1	FBACLK1*	18MIL_G2G_25MIL
{3} FBACLK1*	FBACLK1	18MIL_G2G_25MIL
{3,5} FBD[63..0]		10MIL
{3,5} FBDQM[7..0]		10MIL
{3,5} FBDQS[7..0]		20MIL
{5} MFBD[64..0]		10MIL
{5} MFBDQM[7..0]		10MIL
{5} MFBDQS[7..0]		20MIL
{3,5} FBAA[11..0]		10MIL
{3,5} FBARAS*		10MIL
{3,5} FBACAS*		10MIL
{3,5} FBAWE*		10MIL
{3,5} FBACS0*		10MIL
{3,5} FBABA[1..0]		10MIL
{3,5} FBACKE		10MIL

Micro-Star International Co., LTD.			
MS-8917-A00			
Size: Custom	Document Number: 8x16 DDR 0..31 128 bit		Rev: A00
Date: Monday, February 10, 2003		Sheet 4 of 11	

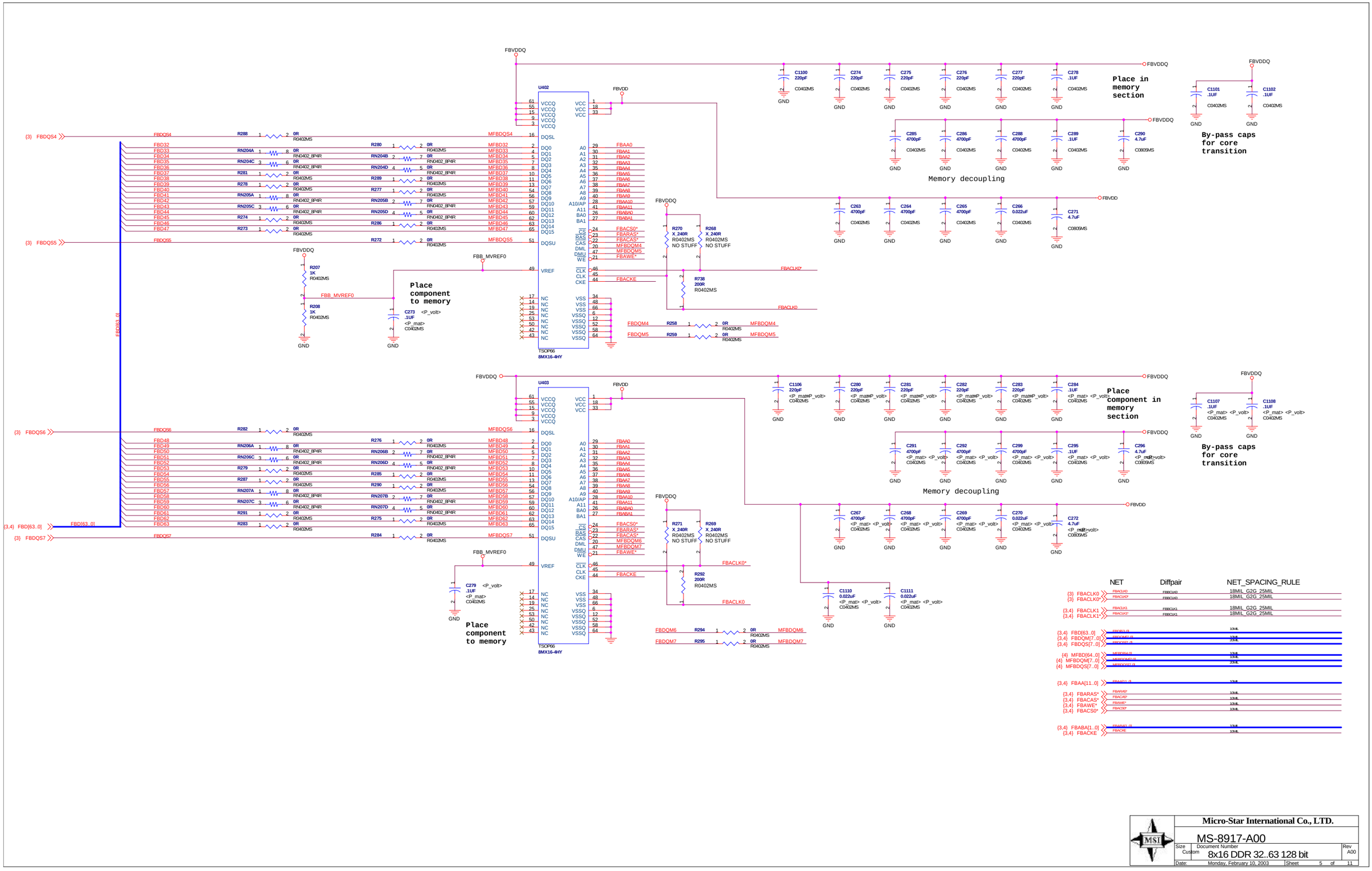

Micro-Star International Co., LTD.

MS-8917-A00

Size	Document Number	Rev
Custom	8x16 DDR 32..63 128 bit	A00

Date: Monday, February 10, 2003 Sheet 5 of 11

NV18 STRAPPING, BIOS, FAN CONNECTOR

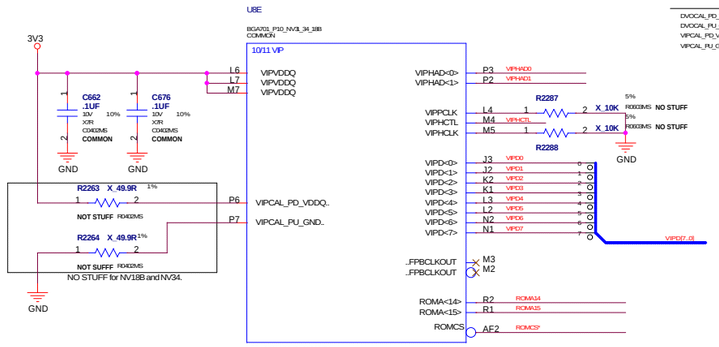

PIN DESCRIPTION	NV18B	NV31	NV34
DVOCAL_PD_VDDQ	NOT USED	50 OHM 1% TO GND	NOT USED
DVOCAL_PU_GND	NOT USED	55 OHM 1% TO DVOVDDQ	NOT USED
VIPCAL_PD_VDDQ	NOT USED	50 OHM 1% TO GND	NOT USED
VIPCAL_PU_GND	NOT USED	50 OHM 1% TO VIPVDDQ	NOT USED

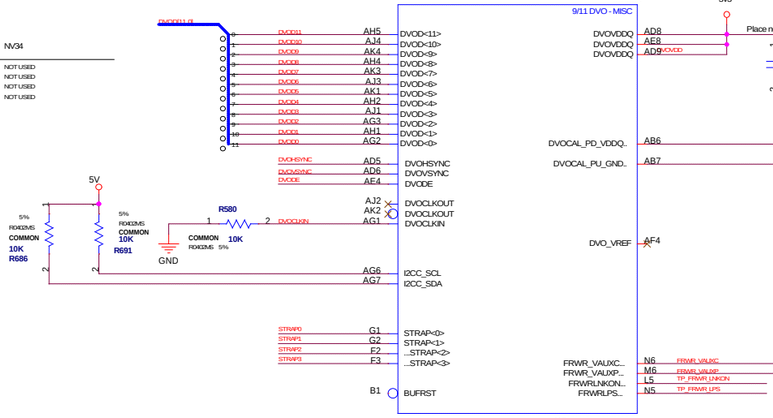

STRAPPING OPTIONS

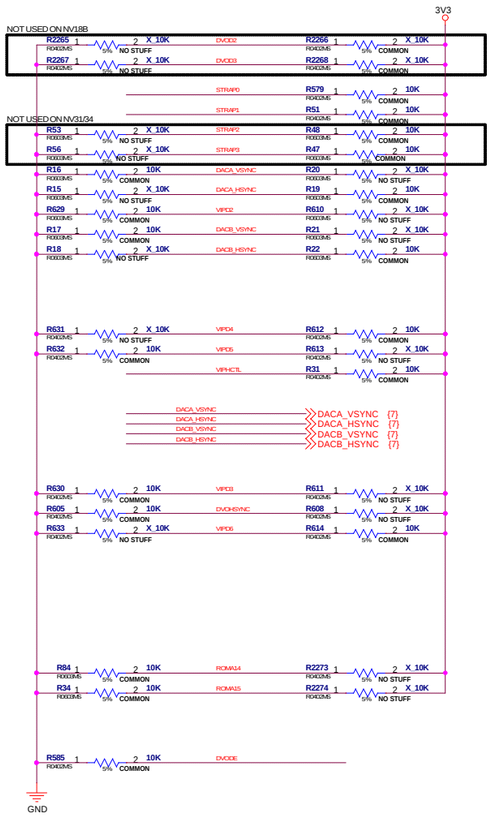

Bit	Signal	VALUE_ID	VALUEs	
00: PCI_AD_SWAP	PCI_AD		0 REVERSED 1 NORMAL	
01: SUB_VENDOR	SUB_VENDOR		0 NO_BIOS 1 read from BIOS	
02: RAM_CFG_0	RAMCFG[3:0]	0000 2Mx32SDR 0001 4Mx16SDR 0010 RFU 0011 RFU 0100 RFU 0101 4Mx32SDR 0110 8Mx16SDR 0111 2Mx2DDR		1000 2Mx3DDR 1001 2Mx3DDR 1010 4Mx3DDR 1011 8Mx3DDR 1100 1Mx3DDR 1101 4Mx3DDR 1110 RFU 1111 4Mx3DDR
03: RAM_CFG_1				
04: RAM_CFG_2				
05: RAM_CFG_3				
06: CRYSTAL_0	CRYSTAL[1:0]	00 13.500 Mhz 01 14.318181Mhz		10 27.000 Mhz 11 unknown
07: TV_MODE_0	TVMODE[1:0]	00 SECAM 01 NTSC		
08: TV_MODE_1		10 PAL 11 CRT		
09: AGPx4x8x				
10: AGP_SBA	AGP_SBA	0 SBA enabled 1 SBA disabled		
11: AGP_FASTWR				
12: PCI_DEVID_0	PCI_DEVID[3:0]	0000 0x0180 ... 1111 0x018F		
13: PCI_DEVID_1				
14: BUS_TYPE	BUS_TYPE[0]	0 PCI 1 AGP		
15: FP_IFACE				
16: USER_0				
17: USER_1				
18: USER_2				
19: USER_3				
20: PCI_DEVID_2				
21: PCI_DEVID_3				
22: CRYSTAL_1				
23: FB_0				
24: FB_1				
25: BR				
26: BR_128M				
27: BR_AGP				
28: BR_IO				
29: ROM_TYPE_0	ROM_TYPE[1:0]	00 Parallel 01 Serial_AT25F 10 Serial_SST45VF 11 RFU		
30: ROM_TYPE_1				
01: 1394_EN_0	1394[0]	0 disabled 1 enabled		

NV18 GPIO

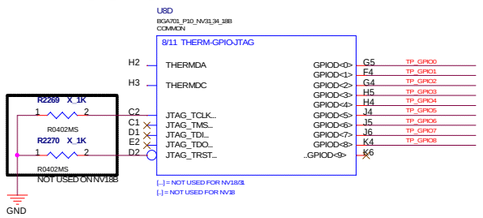

EEPROM

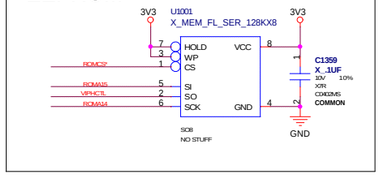

FAN Connector

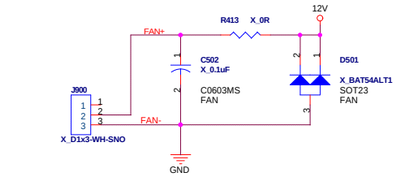

Place close together south-west of GPU

NET	NET_PHYSICAL_TYPE	VOLTAGE
THERM	10MIL_TRACE	
THERMP	10MIL_TRACE	

NET	Diffpair	NET_SPACING_RULE
THERM		20MIL_C2C1_30MIL
THERMP		20MIL_C2C1_30MIL
DVODD[11..0]		10MIL
DVODE		10MIL
DVOHSYNC		10MIL
DVOVSYNC		10MIL

ALL NVIDIA DESIGN SPECIFICATIONS, REFERENCE BOARDS, FILES, DRAWINGS, DIAGNOSTICS, LISTS AND OTHER DOCUMENTS(TOGETHER AND SEPARATELY, MATERIALS) ARE BEING PROVIDED "AS IS".
NVIDIA MAKES NO WARRANTIES, EXPRESSED, IMPLIED, STATUTORY OR OTHERWISE WITH RESPECT TO THE MATERIALS, AND EXPRESSLY DISCLAIMS ALL IMPLIED WARRANTIES OF NONINFRINGEMENT, MERCHANTABILITY AND FITNESS FOR A PARTICULAR PURPOSE.

Micro-Star International Co., LTD.

MS-8917-A00

Size	Document Number	Rev
Custom	NV18B STRAPPING, BIOS	A00
Date:	Monday, February 10, 2003	Sheet 6 of 11

NV18 DAC_A, DAC_B, PLL, SYNC AMPL

NV18 DAC_A

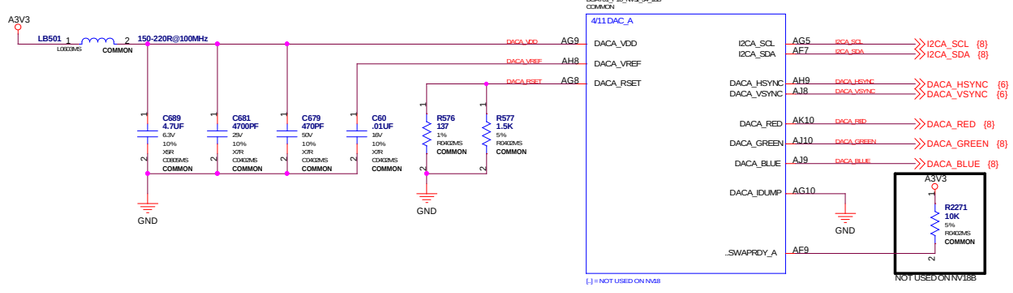

NV18 DAC_B with RSet select

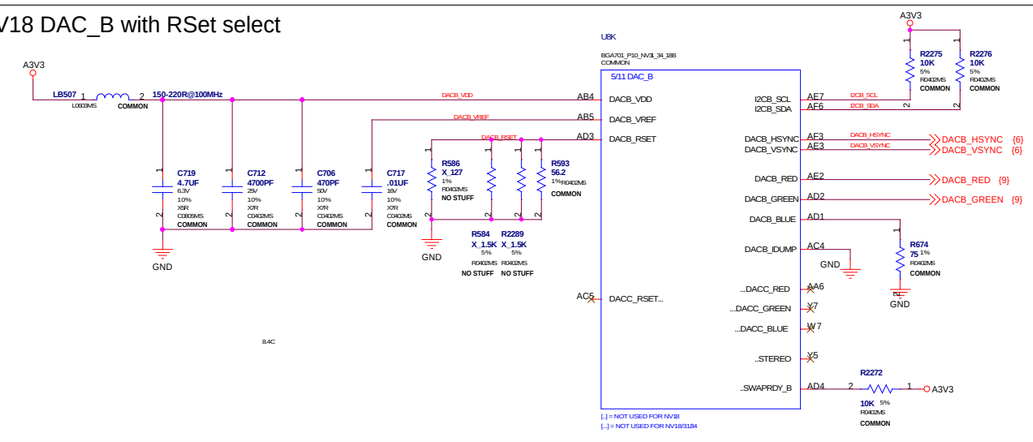

NV18 PLL

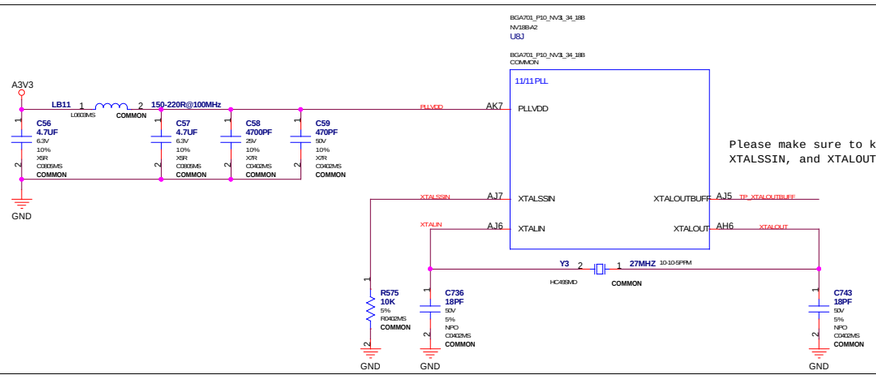

Please make sure to keep all components and nets related to pins XTALIN, XTALOUT, XTALSSIN, and XTALOUTBUFF away from everything else (place all on TOP).

SYNC Amplifier

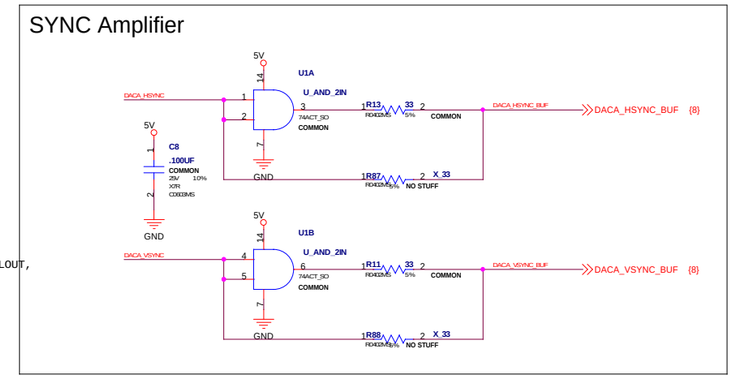

NET	NET_PHYSICAL_TYPE	VOLTAGE
DACA_VDD	12MIL_TRACE	3.3V
DACA_VREF	5MIL_TRACE	
DACA_RSET	5MIL_TRACE	
DACB_VDD	12MIL_TRACE	3.3V
DACB_VREF	5MIL_TRACE	
DACB_RSET	5MIL_TRACE	
PLLVDD	12MIL_TRACE	3.3V

NET	IMPEDANCE	NET_SPACING_RULE
{8} DACA_RED	DACA_RED 37.5 OHM	20MIL_G2G_3DMIL
{8} DACA_GREEN	DACA_GREEN 37.5 OHM	20MIL_G2G_3DMIL
{8} DACA_BLUE	DACA_BLUE 37.5 OHM	20MIL_G2G_3DMIL
{9} DACB_RED	DACB_RED 37.5 OHM	20MIL_G2G_3DMIL
{9} DACB_GREEN	DACB_GREEN 37.5 OHM	20MIL_G2G_3DMIL

ALL NVIDIA DESIGN SPECIFICATIONS, REFERENCE BOARDS, FILES, DRAWINGS, DIAGNOSTICS, LISTS AND OTHER DOCUMENTS(TOGETHER AND SEPARATELY, 'MATERIALS') ARE BEING PROVIDED 'AS IS'.
NVIDIA MAKES NO WARRANTIES, EXPRESSED, IMPLIED, STATUTORY OR OTHERWISE WITH RESPECT TO THE MATERIALS, AND EXPRESSLY DISCLAIMS ALL IMPLIED WARRANTIES OF NONINFRINGEMENT, MERCHANTABILITY AND FITNESS FOR A PARTICULAR PURPOSE.

Micro-Star International Co., LTD.	
MS-8917-A00	
Size: Custom	Document Number: DAC_A,DAC_B,PLL,SYNC AMPL
Rev: A00	
Date: Monday, February 10, 2003	Sheet 7 of 11

DACB output

EMI-FILTER

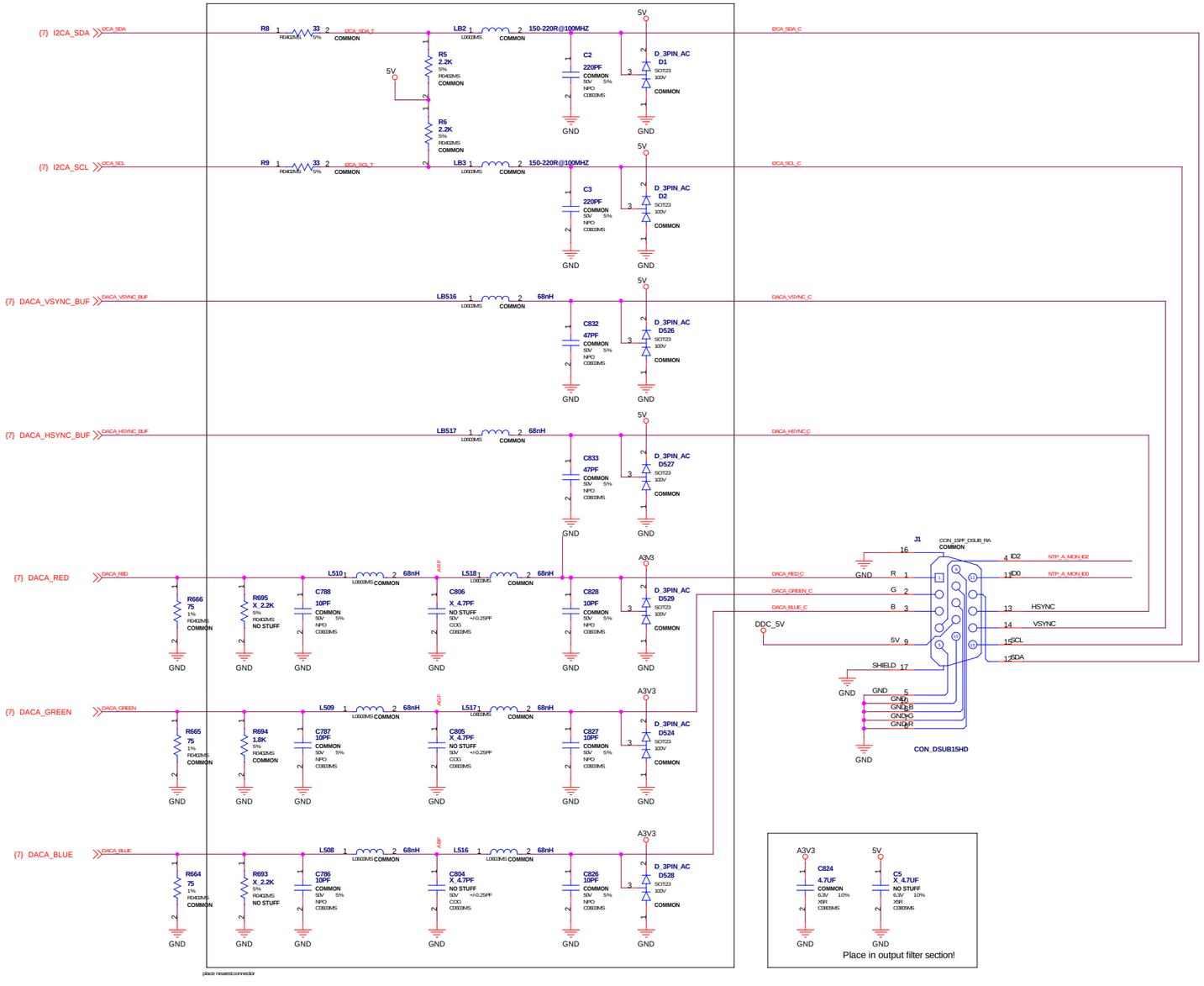

NET	IMPEDANCE	NET_SPACING_RULE
ARF	37.5 OHM	20MIL_G2G_30MIL
AGF	37.5 OHM	20MIL_G2G_30MIL
ABF	37.5 OHM	20MIL_G2G_30MIL
DACA_RED_C	10MIL_TRACE	20MIL_G2G_30MIL
DACA_GREEN_C	10MIL_TRACE	20MIL_G2G_30MIL
DACA_BLUE_C	10MIL_TRACE	20MIL_G2G_30MIL

DDC 5V

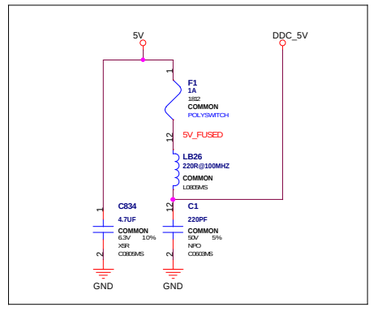

ALL NVIDIA DESIGN SPECIFICATIONS, REFERENCE BOARDS, FILES, DRAWINGS, DIAGNOSTICS, LISTS AND OTHER DOCUMENTS(TOGETHER AND SEPARATELY, "MATERIALS") ARE BEING PROVIDED "AS IS".
NVIDIA MAKES NO WARRANTIES, EXPRESSED, IMPLIED, STATUTORY OR OTHERWISE WITH RESPECT TO THE MATERIALS, AND EXPRESSLY DISCLAIMS ALL IMPLIED WARRANTIES OF NONINFRINGEMENT, MERCHANTABILITY AND FITNESS FOR A PARTICULAR PURPOSE.

Micro-Star International Co., LTD.	
MS-8917-A00	
Size: Custom	Document Number: DAC A CONNECT
Rev: A00	
Date: Monday, February 10, 2003	Sheet 8 of 11

INTERNAL TMDS POWER AND DECOUPLING

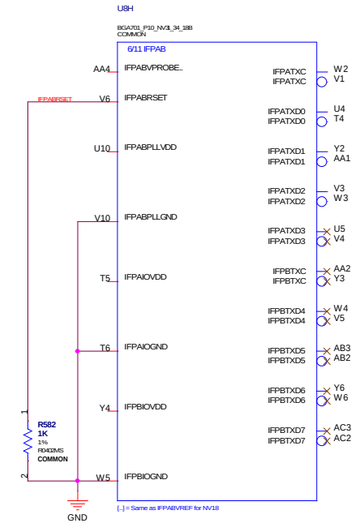

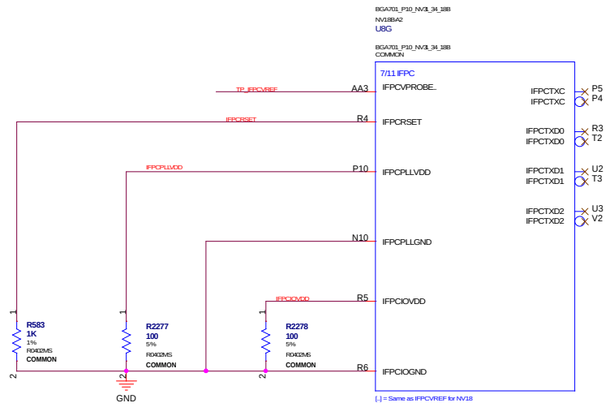

VIDEO OUT CONNECTOR

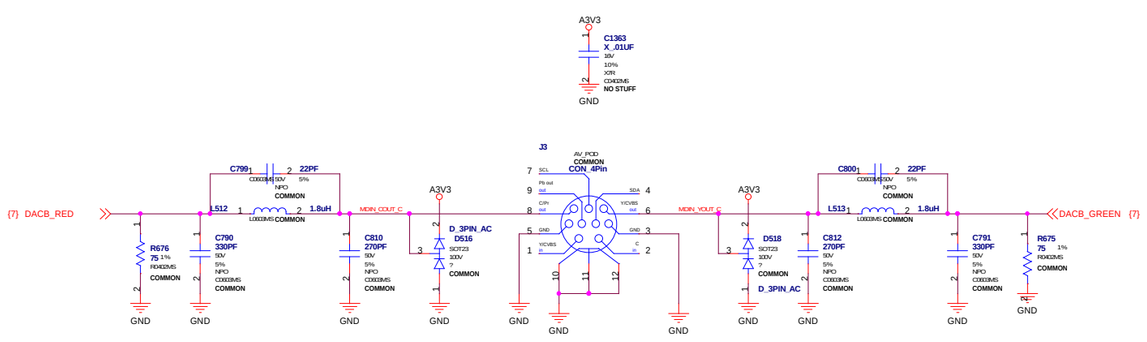

ALL NVIDIA DESIGN SPECIFICATIONS, REFERENCE BOARDS, FILES, DRAWINGS, DIAGNOSTICS, LISTS AND OTHER DOCUMENTS(TOGETHER AND SEPARATELY, 'MATERIALS') ARE BEING PROVIDED 'AS IS'.
NVIDIA MAKES NO WARRANTIES, EXPRESSED, IMPLIED, STATUTORY OR OTHERWISE WITH RESPECT TO THE MATERIALS, ANDEXPRESSLY DISCLAIMS ALL IMPLIED WARRANTIES OF NONINFRINGEMENT, MERCHANTABILITY AND FITNESS FOR A PARTICULAR PURPOSE.

Micro-Star International Co., LTD.

MS-8917-A00

Size	Document Number	Rev
Custom	VIDEO IN/OUT CONNECT	A00
Date: Monday, February 10, 2003	Sheet 9 of 11	

POWER SUPPLY

ANALOG 3V3

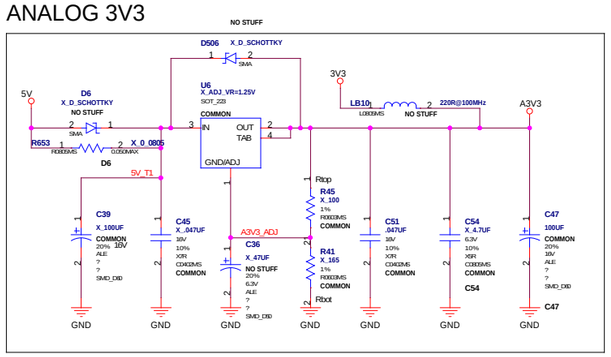

Vout = VRef * (1+Rbot/Rtop)

3.31V = 1.25V * (1+(165/100))

FBVDD 3.3V

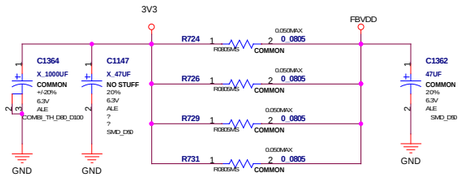

NET	NET_PHYSICAL_TYPE	VOLTAGE
3V3	12MIL_TRACE	3.3V
A3V3	12MIL_TRACE	3.3V
3V3TMDS	12MIL_TRACE	3.3V
NVVDD	12MIL_TRACE	1.65V
5V	12MIL_TRACE	5V
12V	12MIL_TRACE	12V
3V3_F	12MIL_TRACE	3.3V
12V_F	12MIL_TRACE	12V
5V_FUSED	12MIL_TRACE	5V
DDC_5V	12MIL_TRACE	5V
SW_12V	10MIL_TRACE	12V
SW_5V	10MIL_TRACE	5V
DR_H	10MIL_TRACE	
DR_LO	10MIL_TRACE	
SW_FB	10MIL_TRACE	
SW_COMP	10MIL_TRACE	
A3V3_ADJ	10MIL_TRACE	
FBVDDQ	12MIL_TRACE	2.5V

NVDD-SWITCHER / FBVDD-LDO CONTROLER ISL6529

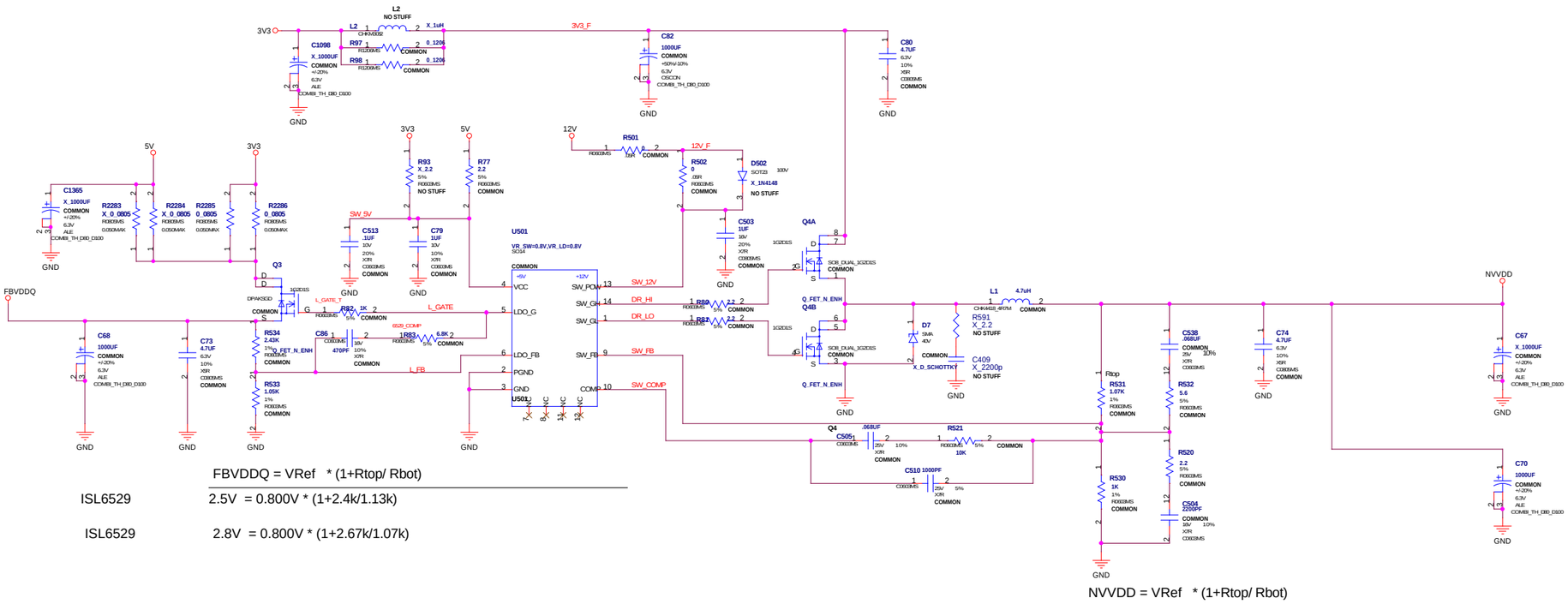

FBVDDQ = VRef * (1+Rtop/ Rbot)

ISL6529 2.5V = 0.800V * (1+2.4k/1.13k)

ISL6529 2.8V = 0.800V * (1+2.67k/1.07k)

NVVDD = VRef * (1+Rtop/ Rbot)

ISL6529 1.656V = 0.800V * (1+1070/1000)

ALL NVIDIA DESIGN SPECIFICATIONS, REFERENCE BOARDS, FILES, DRAWINGS, DIAGNOSTICS, LISTS AND OTHER DOCUMENTS(TOGETHER AND SEPARATELY, 'MATERIALS') ARE BEING PROVIDED 'AS IS'.
NVIDIA MAKES NO WARRANTIES, EXPRESSED, IMPLIED, STATUTORY OR OTHERWISE WITH RESPECT TO THE MATERIALS, AND EXPRESSLY DISCLAIMS ALL IMPLIED WARRANTIES OF NONINFRINGEMENT, MERCHANTABILITY AND FITNESS FOR A PARTICULAR PURPOSE.

Micro-Star International Co., LTD.	
MS-8917-A00	
Size: Custom	Document Number: POWER SUPPLY
Rev: A00	
Date: Monday, February 10, 2003	Sheet 10 of 11

MECHANICS

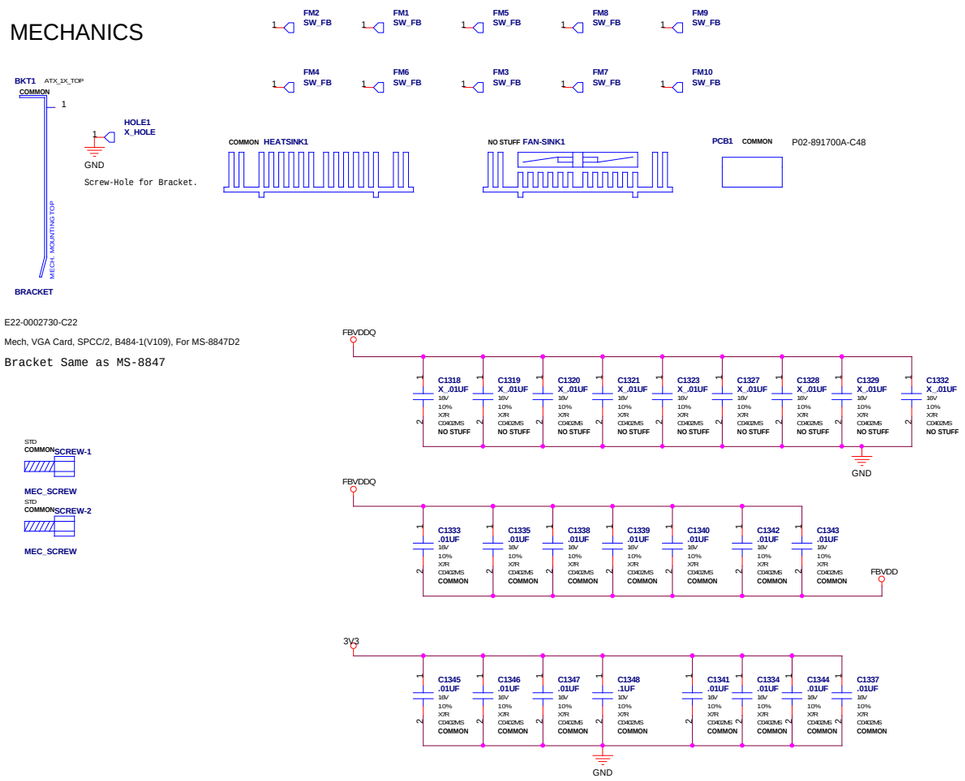

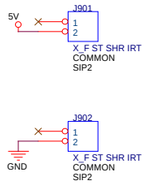

NET	NET_PHYSICAL_TYPE	VOLTAGE
3V3	12MIL_TRACE	3.3V
FBVDD	12MIL_TRACE	3.3V
5V	12MIL_TRACE	5V

ALL NVIDIA DESIGN SPECIFICATIONS, REFERENCE BOARDS, FILES, DRAWINGS, DIAGNOSTICS, LISTS AND OTHER DOCUMENTS(TOGETHER AND SEPARATELY, 'MATERIALS') ARE BEING PROVIDED 'AS IS'.
NVIDIA MAKES NO WARRANTIES, EXPRESSED, IMPLIED, STATUTORY OR OTHERWISE WITH RESPECT TO THE MATERIALS, AND EXPRESSLY DISCLAIMS ALL IMPLIED WARRANTIES OF NONINFRINGEMENT, MERCHANTABILITY AND FITNESS FOR A PARTICULAR PURPOSE.

Micro-Star International Co., LTD.

MS-8917-A00

Size	Document Number	Rev
Custom	MECHANICS	A00

Date: Monday, February 10, 2003 Sheet 11 of 11