1. ALL RESISTANCE VALUES ARE IN OHMS, 0.1 WATT +/- 5%.
2. ALL CAPACITANCE VALUES ARE IN MICROFARADS.
3. ALL CRYSTALS & OSCILLATOR VALUES ARE IN HERTZ.

J418 EVT: MLB-A

LAST_MODIFICATION=Fri Aug 30 17:33:27 2019

J417_STOCKHOLM_MLB SYNC VER 0.6.0

REV	ECN	DESCRIPTION OF REVISION	CK APPD / DATE
3	0019504693	ENGINEERING RELEASED	2019-08-30

PAGE	CSA	CONTENTS	SYNC	DATE
1	1	TABLE OF CONTENTS	MLB_P0	07/17/2017
2	2	BLOCK DIAGRAM	J417_MLB_B	05/15/2019
3	4	BOM TABLES	J317_MLB_B	11/16/2018
4	5	SOC: MISC & ALIASES	J417_MLB_B	05/15/2019
5	6	SOC: MAIN	J417_MLB_B	05/15/2019
6	7	SOC: I/OS	J421_P2_CHINA	05/13/2019
7	8	SOC: LPDP & MIPI	J421_P2_CHINA	05/13/2019
8	9	SOC: PCIE	J421_P2_CHINA	05/13/2019
9	10	SOC: AOP	J421_P2_CHINA	05/13/2019
10	11	SOC: POWER (DDR,SRAM)	J421_TO_J418_MERGE_P2	05/10/2019
11	12	SOC: POWER (IO)	J421_TO_J418_MERGE_P2	05/10/2019
12	13	SOC: POWER (CPU, GPU)	J421_P2_CHINA	05/13/2019
13	14	SOC: POWER (SRAM, SOC)	J421_P2_CHINA	05/13/2019
14	15	SOC: GND	J421_P2_CHINA	05/13/2019
15	16	SOC: GND-2	J421_P2_CHINA	05/13/2019
16	18	NAND: NAND1	J421_P2_CHINA	05/13/2019
17	19	NAND: NAND2	J421_P2_CHINA	05/13/2019
18	21	SENSOR: KOBOL, PHOS2, MOLY	J417_P2_CHINA	08/12/2019
19	22	TOUCH: LANAI MASTER	DEV_LANAI	08/12/2019
20	23	TOUCH: KONA SLAVE	DEV_LANAI	08/12/2019
21	24	TOUCH: GRAPE CONN	J317_MLB_B	11/16/2018
22	26	CAMERA: PENROSE ADC	J418_SYNC_P2	05/20/2019
23	27	CAMERA: B2B STROBE & MISC	J421_P2_CHINA	05/13/2019
24	28	CAMERA: B2B FRONT	J421_P2_CHINA	05/13/2019
25	29	CAMERA: STROBE	J317_MLB_B	11/16/2018
26	30	AUDIO: BORRIS BOOST	J420_MLB	01/16/2019
27	31	AUDIO: DMIC B2B & FILTERS	J421_P2_CHINA	05/13/2019
28	32	AUDIO: SPEAKER AMPS (CNL)	J420_MLB	01/16/2019
29	33	AUDIO: SPEAKER AMPS (CNR)	J420_MLB	01/16/2019
30	34	AUDIO: SPEAKER AMPS (FHL)	J420_MLB	01/16/2019
31	35	AUDIO: SPEAKER AMPS (FHR)	J420_MLB	01/16/2019
32	36	IO: ACE PERIPHERALS	J421_P2_CHINA	05/13/2019
33	37	IO: IOFLEX B2B & SIM B2B	J421_P2_CHINA	05/13/2019
34	38	IO: ACE USB-C CONTROLLER	J421_P2_CHINA	05/13/2019
35	39	IO: ACE REDRIVER	J421_P2_CHINA	05/13/2019
36	40	IO: ACE FILTERS	J317_MLB_B	11/16/2018
37	41	PEARL: RIGEL DRIVER	J421_P2_CHINA	05/13/2019
38	42	PEARL: B2B TITUS + JULIET	J421_P2_CHINA	05/13/2019
39	43	PEARL: B2B ROSALINE + MISC	J421_P2_CHINA	05/13/2019
40	45	DISPLAY: B2B CONN	J317_MLB_B	11/16/2018
41	46	DISPLAY: EDP SUPPORT	J317_MLB_B	11/16/2018
42	49	GODFATHER	WIFI_MLB_0.43.0	08/12/2019
43	50	J417: Remote FEMs	WIFI_MLB_0.43.0	08/12/2019
44	51	J417: Front End	WIFI_MLB_0.43.0	08/12/2019
45	60	CAMERA: ADAMS POWER (1/2)	DEV_PANORAMA_0.3.0	08/12/2019
46	61	CAMERA: ADAMS IO (2/2)	DEV_PANORAMA_0.3.0	08/12/2019
47	62	CAMERA: JASPER POWER	J421_P2_CHINA	08/12/2019
48	65	CAMERA: B2B RCAM1 WIDE	J421_P2_CHINA	05/13/2019
49	66	CAMERA: B2B RCAM2 SWIDE	J421_P2_CHINA	05/13/2019
50	67	CAMERA: B2B JASPER	J418_SYNC_P2	08/12/2019
51	74	NFC CONTROLLER	J421_P2_CHINA	05/13/2019
52	76	GPM	J421_P2_CHINA	05/13/2019
53	77	POWER: APOLLO (1/3)	J317_MLB_B	11/16/2018
54	78	POWER: APOLLO (2/3)	J317_MLB_B	11/16/2018
55	79	POWER: APOLLO (3/3)	J317_MLB_B	07/02/2019
56	80	ORION CONNECTOR & POWER PATH	J421_P2_CHINA	05/13/2019
57	81	POWER: ATHENA (1/4)	J317_MLB_B	11/16/2018
58	82	POWER: ATHENA (2/4)	J317_MLB_B	11/16/2018
59	83	POWER: ATHENA (3/4)	J317_MLB_B	11/16/2018
60	84	POWER: ATHENA (4/4)	J317_MLB_B	11/16/2018
61	85	POWER: CHARGER	J317_MLB_B	11/16/2018
62	86	POWER: EXTERNAL SWITCHES	J421_P2_CHINA	05/13/2019
63	87	POWER: SCORPIUS/BELLATRIX2 BOOSTS	J421_P2_CHINA	05/13/2019
64	89	POWER: BATTERY & ORION & SCORPIUS CONN	J317_MLB_B	11/16/2018
65	90	SOC: DEBUG	J421_P2_CHINA	05/13/2019
66	91	ALIASES: BB/WLAN/BT	J317_MLB_B	11/16/2018
67	92	ALIASES: J417/J420 DIFF	J317_MLB_B	11/16/2018
68	93	TEST: TPS/HOLES/FIDUCUALS	J317_MLB_B	11/16/2018
69	94	TEST: TPS ADDITIONAL	TP NEW PAGE	02/21/2019
70	95	TEST: EE TP/PP	J317_MLB_B	11/16/2018
71	98	TEST: DCR TABLE	J317_MLB_B	11/16/2018
72	99	ALIASES: POWER	J317_MLB_B	11/16/2018

SCH AND BOARD P/N

PART#	QTY	DESCRIPTION	REFERENCE DESIGNATOR(S)	CRITICAL	BOM OPTION
051-04886	1	SCHEM,MLB-A,YN,J417	SCH1	CRITICAL	
820-01839	1	PCBF,MLB-A,YN,J417	PCB1	CRITICAL	

SYNC_MASTER=MLB_P0 SYNC_DATE=07/17/2017

DRAWING TITLE

SCHEM,MLB-A,YN,J417

J4xx | System Block Diagram

Apple Confidential Updated: May 9th, 2019

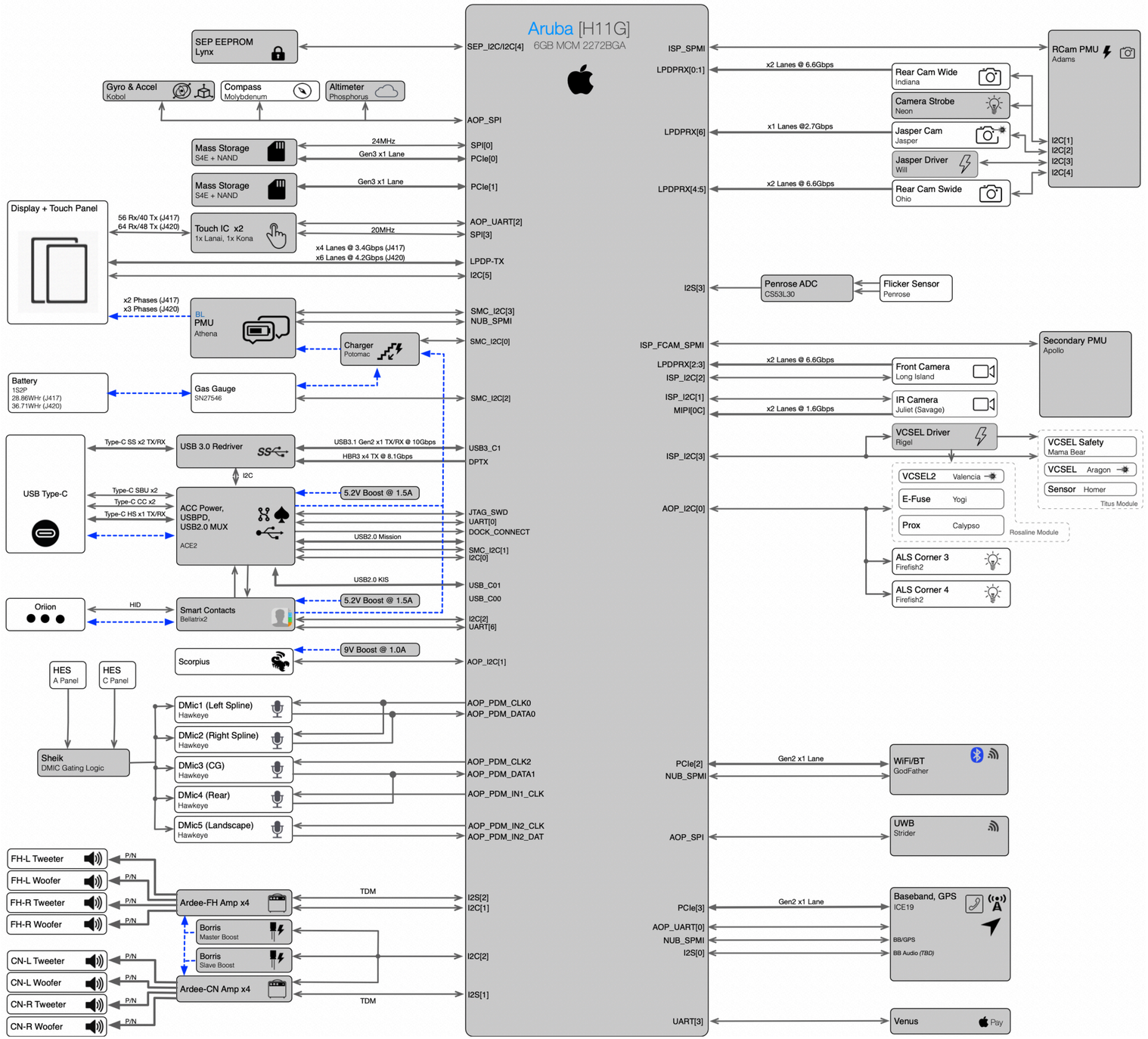

SYNC_MASTER=J417_MLB_B SYNC_DATE=05/15/2019

PAGE TITLE

BLOCK DIAGRAM

CKPLUS WAIVE TABLE

CKPLUS RULE EXCEPTIONS	REQUIRED
SCHEMATIC DEFINED CONSTRAINTS (YES/NO)	NO

MECHANICAL PARTS

PART#	QTY	DESCRIPTION	REFERENCE DESIGNATOR(S)	CRITICAL	BOM OPTION
806-16652	1	FENCE,TOUCH,MLB	TOUCH_FENCE	CRITICAL	
806-20903	1	CAN,CELL,RIGEL,LH,MLB_B	CELL_FENCE	CRITICAL	MLB_B
806-20920	1	FENCE,AP,MLB	AP_FENCE	CRITICAL	
806-20849	1	CAN,FH REMOTE FEM,MLB_B	RFEM_FENCE	CRITICAL	MLB_B
806-14412	1	CAN,RFEM,RIGEL,LH,MLB_A	WIFI_FENCE	CRITICAL	MLB_A
806-20860	1	CAN,ADAMS,MLB	ADAMS_FENCE	CRITICAL	
806-20859	1	CAN,PENINSULA,MLB	PENINSULA_FENCE	CRITICAL	

BARCODE LABEL/EEEE CODES

PART#	QTY	DESCRIPTION	REFERENCE DESIGNATOR(S)	CRITICAL	BOM OPTION
825-7691	1	EEEE FOR 639-07761 (MLB B BEST)	EEEE_M07L	CRITICAL	EEEE_MLB_B_BEST
825-7691	1	EEEE FOR 639-07760 (MLB B SUPREME)	EEEE_M077	CRITICAL	EEEE_MLB_B_SUPREME
825-7691	1	EEEE FOR 639-07762 (MLB B EXTREME-TB)	EEEE_M07Y	CRITICAL	EEEE_MLB_B_EXTREME_TB
825-7691	1	EEEE FOR 639-08567 (MLB B EXTREME-WD)	EEEE_MPV4	CRITICAL	EEEE_MLB_B_EXTREME_WD
825-7691	1	EEEE FOR 639-07763 (MLB B PRIME)	EEEE_M089	CRITICAL	EEEE_MLB_B_PRIME
825-7691	1	EEEE FOR 639-07764 (MLB B BEST ROW/JP)	EEEE_M08N	CRITICAL	EEEE_MLB_B_JP_BEST
825-7691	1	EEEE FOR 639-07765 (MLB B SUPREME ROW/JP)	EEEE_M091	CRITICAL	EEEE_MLB_B_JP_SUPREME
825-7691	1	EEEE FOR 639-07766 (MLB B EXTREME-TB ROW/JP)	EEEE_M09D	CRITICAL	EEEE_MLB_B_JP_EXTREME-TB
825-7691	1	EEEE FOR 639-08568 (MLB B EXTREME-WD ROW/JP)	EEEE_MPVJ	CRITICAL	EEEE_MLB_B_JP_EXTREME-WD
825-7691	1	EEEE FOR 639-07767 (MLB B PRIME ROW/JP)	EEEE_M09Q	CRITICAL	EEEE_MLB_B_JP_PRIME
825-7691	1	EEEE FOR 639-07768 (MLB B BEST CH)	EEEE_M0D3	CRITICAL	EEEE_MLB_B_CH_BEST
825-7691	1	EEEE FOR 639-07769 (MLB B SUPREME CH)	EEEE_M0DG	CRITICAL	EEEE_MLB_B_CH_SUPREME
825-7691	1	EEEE FOR 639-07770 (MLB B EXTREME-TB CH)	EEEE_M0DT	CRITICAL	EEEE_MLB_B_CH_EXTREME_TB
825-7691	1	EEEE FOR 639-08569 (MLB B EXTREME-WD CH)	EEEE_MPW1	CRITICAL	EEEE_MLB_B_CH_EXTREME_WD
825-7691	1	EEEE FOR 639-07771 (MLB B PRIME CH)	EEEE_M0G5	CRITICAL	EEEE_MLB_B_CH_PRIME
825-7691	1	EEEE FOR 639-07772 (MLB A BEST)	EEEE_M0GJ	CRITICAL	EEEE_MLB_A_BEST
825-7691	1	EEEE FOR 639-10260 (MLB A ULTIMATE)	EEEE_P6WT	CRITICAL	EEEE_MLB_A_ULTIMATE
825-7691	1	EEEE FOR 639-07773 (MLB A SUPREME)	EEEE_M0GW	CRITICAL	EEEE_MLB_A_SUPREME
825-7691	1	EEEE FOR 639-07774 (MLB A EXTREME-TB)	EEEE_M0H8	CRITICAL	EEEE_MLB_A_EXTREME_TB
825-7691	1	EEEE FOR 639-08636 (MLB A EXTREME-WD)	EEEE_MTL2	CRITICAL	EEEE_MLB_A_EXTREME_WD
825-7691	1	EEEE FOR 639-07775 (MLB A PRIME)	EEEE_M0HM	CRITICAL	EEEE_MLB_A_PRIME

INDUCTORS

PART NUMBER	ALTERNATE FOR PART NUMBER	REFERENCE DESIGNATOR(S)	DESCRIPTION	BOM OPTION
152S00963	152S00885	L77A0,L8490	0.47UH TAIYO YUDEN	
152S00964	152S00888	L7741,ETC	0.15UH TAIYO YUDEN	
152S01003	152S00888	L7741,ETC	0.15UH SUNLORD	

FERRITE BEADS

PART NUMBER	ALTERNATE FOR PART NUMBER	REFERENCE DESIGNATOR(S)	DESCRIPTION	BOM OPTION
155S0664	155S00018	FL2748,ETC	0.18 DCR MURATA	
155S00097	155S00018	FL2748,ETC	0.17 DCR TDK	
155S0660	155S0513	FL2761,ETC	0.04 DCR MURATA	
155S00512	155S0897	L4602, ETC	200HM 0603 0.1A MURATA	
155S00114	155S00115	FL8950, ETC	10HM 0603 8A LAIRD	

MOSFETS

PART NUMBER	ALTERNATE FOR PART NUMBER	REFERENCE DESIGNATOR(S)	DESCRIPTION	BOM OPTION
376S00319	376S00104	Q2201	DIODES	
376S00182	376S00126	Q8580	DIODES	
376S00071	376S00126	Q8580	DIODES	
376S00314	376S00125	Q8051	DIODES	
376S00182	376S00070	Q8581	DIODES	
376S1245	376S1102	DQ2280, ETC.	20V 229MA XLLGA3 DIODES	
376S1102	376S1245	Q8900, ETC.	20V 229MA XLLGA3 DIODES	

CAPS

PART NUMBER	ALTERNATE FOR PART NUMBER	REFERENCE DESIGNATOR(S)	DESCRIPTION	BOM OPTION
138S00143	138S00144	C7740,ETC	22UF 4V KYOCERA	
138S00163	138S00144	C7740,ETC	22UF 4V TAIYO YUDEN	
138S00117	138S00071	C7993,ETC	4UF 6.3V KYOCERA	
132S00211	132S00092	C3204,ETC	270PF 16V KYOCERA	
132S00212	132S00092	C3204,ETC	270PF 16V TAIYO YUDEN	
132S0436	132S00014	C0820,ETC	0.22UF 6.3V	
138S00148	138S00149	C1220,ETC	15UF 4V KYOCERA	
138S00150	138S00149	C1220,ETC	15UF 4V SAMSUNG	
138S00151	138S00149	C1220,ETC	15UF 4V TAIYO YUDEN	
138S0614	138S0732	C2218,ETC	1UF 10V 0402	
132S00088	132S0639	C2221,ETC	0.47UF 25V TAIYO YUNDEN	
138S0706	138S0739	C1215,ETC	1UF 10V 0201 MURATA	
138S0945	138S0739	C1215,ETC	1UF 10V 0201 KYOCERA	
131S00299	131S00118	C3334,ETC	180PF 50V TAIYO YUDEN	
128S00094	128S00067	C77DF,ETC	150UF 6.3V TOKIN	
128S00065	128S00067	C77DF,ETC	150UF 6.3V KEMET	
128S00069	128S00067	C77DF,ETC	150UF 6.3V KYOCERA	
138S00215	138S1068	C2350,ETC	4.7UF 16V TAIYO YUDEN	
131S00172	131S00164	C1232,ETC	220PF 16V KYOCERA	
131S00173	131S00164	C1232,ETC	220PF 16V TAIYO YUDEN	
131S00142	131S00019	C3236,ETC	150PF 50V 0201	
131S0730	131S0831	C40A7	15PF 50V 0201	
138S00139	138S00138	C12D1,C12F0	4UF 4V MURATA	
138S00164	138S00138	C12D1,C12F0	4UF 4V TAIYO YUDEN	
138S00084	138S00060	C8563,ETC	47UF 6.3V TAIYO YUNDEN	
131S00313	131S0824	C4632	330PF 25V TAIYO YUNDEN	
132S00175	132S00202	C4000,ETC	0.22UF KYOCERA ONLY	
132S00154	132S0683	C6352,ETC	0.1UF 01005 TAIYO	
138S0641	138S0700	C2206,ETC	2.2UF 10V 0402 TAIYO	
132S0316	132S00107	C3828,C3829	.1UF 6.3V 01005 TAIYO	
131S00164	131S00172	C2711,C2713	220PF 16V 01005 MURATA	
131S00173	131S00172	C2711,C2713	220PF 16V 01005 TAIYO	
138S00048	138S00003	C6000,ETC.	15UF 6.3V 0402 KYOCERA	
138S0888	138S00003	C6000,ETC.	15UF 6.3V 0402 TAIYO	
138S0711	138S00020	C8513	10UF 6.3V 0402 TAIYO	
138S00291	138S0835	C1201,ETC.	4.3UF 4V 0402 KYOCERA	
132S00064	132S0409	C3207,ETC.	0.1UF 16V 0201 MURATA	
138S00221	138S00146	C4197,ETC.	18UF 6.3V 0402 KYOCERA	
132S00229	132S00010	C8555,ETC.	0.1UF 35V 0201 TAIYO	
132S00262	132S0664	C2228,ETC.	0.047UF 25V 0201 KYOC	
138S00101	138S00095	C3800,ETC.	25UF 6.3V 0402 TAIYO	
138S0884	138S00229	C81A5,ETC.	20UF 6.3V 0402	

DIODES

PART NUMBER	ALTERNATE FOR PART NUMBER	REFERENCE DESIGNATOR(S)	DESCRIPTION	BOM OPTION
371S00133	371S00046	D8710	DIODES	
371S0685	371S00176	DZ8051	NXP	
377S0155	377S0184	DZ4014,ETC	ONSEMI	
371S00190	371S00085	D3800	DIODES	

OTHER

PART NUMBER	ALTERNATE FOR PART NUMBER	REFERENCE DESIGNATOR(S)	DESCRIPTION	BOM OPTION
353S01570	353S00748	U2350	ONSEMI BUCK	
353S01486	353S01676	U8992	TI COMPARATOR	

SOC

PART#	QTY	DESCRIPTION	REFERENCE DESIGNATOR(S)	CRITICAL	BOM OPTION
339S00633	1	IC,ARUBA+6G,A1,DEV	U0600	CRITICAL	

PART NUMBER	ALTERNATE FOR PART NUMBER	BOM OPTION	REF DES	COMMENTS:
339S00635	339S00633		U0600	HYNIX SCK
339S00634	339S00633		U0600	MICRON ATK
339S00636	339S00633		U0600	MICRON SCK

ADAMS

PART#	QTY	DESCRIPTION	REFERENCE DESIGNATOR(S)	CRITICAL	BOM OPTION
338S00523	1	IC,PMU,ADAMS,D2657B0,OTP-BD	U6100	CRITICAL	

ATHENA

PART#	QTY	DESCRIPTION	REFERENCE DESIGNATOR(S)	CRITICAL	BOM OPTION
343S00262	1	IC,PMU,ATHENA,D2483A0,OTP-GE	U8100	CRITICAL	

APOLLO

PART#	QTY	DESCRIPTION	REFERENCE DESIGNATOR(S)	CRITICAL	BOM OPTION
343S00263	1	IC,PMU,APOLLO,D2537A0,OTP-GD	U7700	CRITICAL	

POTOMAC

PART#	QTY	DESCRIPTION	REFERENCE DESIGNATOR(S)	CRITICAL	BOM OPTION
343S00288	1	IC,CHRGR,POTOMAC,D2559A0,OTP-ED	U8500	CRITICAL	

NAND

BEST CONFIG(U1900 NOSTUFF) 64GB 639-07772

PART#	QTY	DESCRIPTION	REFERENCE DESIGNATOR(S)	CRITICAL	BOM OPTION
335S00393	1	TOSHIBA,BICS4	U1800	CRITICAL	BEST_PROD

PART NUMBER	ALTERNATE FOR PART NUMBER	BOM OPTION	REF DES	COMMENTS:
335S00388	335S00393	BEST_PROD	U1800	WESTERNDIGITAL,BICS4

ULTIMATE CONFIG(U1900 NOSTUFF) 128GB 639-10260

PART#	QTY	DESCRIPTION	REFERENCE DESIGNATOR(S)	CRITICAL	BOM OPTION
335S00394	1	TOSHIBA,BICS4	U1800	CRITICAL	ULTIMATE_PROD

PART NUMBER	ALTERNATE FOR PART NUMBER	BOM OPTION	REF DES	COMMENTS:
335S00389	335S00394	ULTIMATE_PROD	U1800	WESTERNDIGITAL,BICS4

SUPREME CONFIGURATIONS 256GB 639-07773

PART#	QTY	DESCRIPTION	REFERENCE DESIGNATOR(S)	CRITICAL	BOM OPTION
335S00394	2	TOSHIBA,BICS4	U1800,U1900	CRITICAL	SUPREME_PROD

PART NUMBER	ALTERNATE FOR PART NUMBER	BOM OPTION	REF DES	COMMENTS:
335S00389	335S00394	SUPREME_PROD	U1800,U1900	WESTERNDITITAL,BICS4

EXTREME-TB FLASH CONFIGURATIONS 512GB 639-08636

PART#	QTY	DESCRIPTION	REFERENCE DESIGNATOR(S)	CRITICAL	BOM OPTION
335S00397	1	TOSHIBA,BICS4,10DP	U1800	CRITICAL	EXTREME_TB_PROD
335S00396	1	TOSHIBA,BICS4,8DP	U1900	CRITICAL	EXTREME_TB_PROD

EXTREME-WD CONFIGURATIONS 512GB 639-07774

PART#	QTY	DESCRIPTION	REFERENCE DESIGNATOR(S)	CRITICAL	BOM OPTION
335S00408	1	WESTDIGITAL,BICS4,10DP	U1800	CRITICAL	EXTREME_WD_PROD
335S00390	1	WESTDIGITAL,BICS4,8DP	U1900	CRITICAL	EXTREME_WD_PROD

PRIME CONFIGURATIONS 1TB 639-07775

PART#	QTY	DESCRIPTION	REFERENCE DESIGNATOR(S)	CRITICAL	BOM OPTION
335S00391	2	WESTERNDIGITAL,BICS4	U1800,U1900	CRITICAL	PRIME_PROD

PART NUMBER	ALTERNATE FOR PART NUMBER	BOM OPTION	REF DES	COMMENTS:
335S00425	335S00391	PRIME_PROD	U1800,U1900	SAMSUNG,3DV5
335S00380	335S00391	PRIME_PROD	U1800,U1900	HYNIX,3DV5

SYNC_MASTER=J317_MLB_B SYNC_DATE=11/16/2018

PAGE TITLE

BOM TABLES

BOOT CONFIG ID

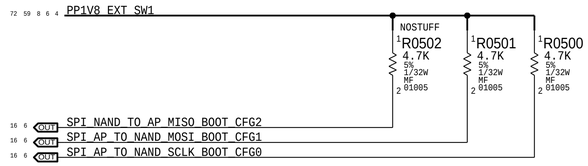

BOOT_CFG[3:0]	MODE
000	SPI0 NOR
001	SPI0 NOR TEST
010	SPI0 NAND
(PROTO) ---> 011	SPI0 NAND TEST
100	SPI0 NOR (40MHZ)
101	SPI0 NOR (40MHZ) TEST
110	SPI0 NOR (60MHZ)
111	SPI0 NOR (60MHZ) TEST

S/W READ FLOW

1. SET GPIO AS INPUT
2. DISABLE PU AND ENABLE PD
3. READ

BOARD ID

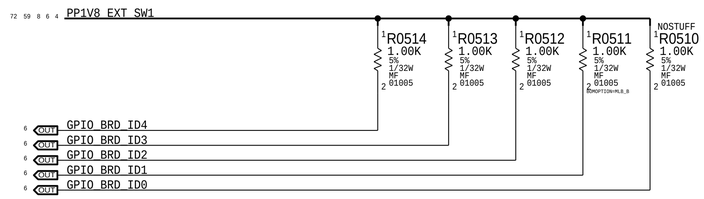

	BRD_ID[4-0]	
CURRENT SETTING --->	11100	J417 AP
	11101	J417 DEV
	11110	J418 AP
	11111	J418 DEV

RDAR//PROBLEM/45689533
BRD_ID[7-5]=001, FROM FUSE
J417/J420 MUST USE D?? FUSED ARUBA PART

S/W READ FLOW

1. SET GPIO AS INPUT
2. DISABLE PU AND ENABLE PD
3. READ

BOARD REVISION

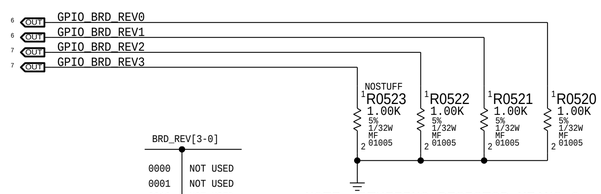

NOTE: STUFFING RESISTOR MEANS 0

	BRD_REV[3-0]	
	0000	NOT USED
	0001	NOT USED
	0010	NOT USED
	0011	NOT USED
	0100	PROTO2 LOCAL
	0101	PROTO2 CHINA
	0110	EVT LOCAL
	0111	RESERVED J307
CURRENT SETTING --->	1000	EVT CHINA
	1001	UNUSED
	1010	UNUSED

S/W READ FLOW

1. SET GPIO AS INPUT
2. ENABLE PU AND DISABLE PD
3. READ

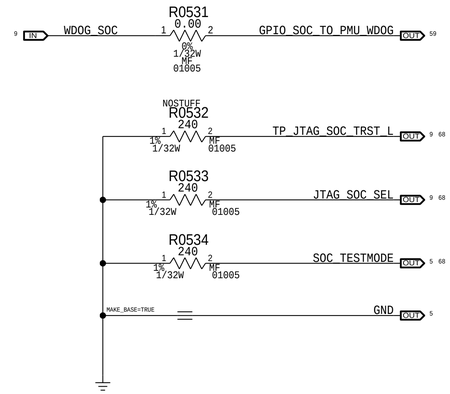

I2C0

DEVICE	8-BIT	7-BIT
ACE2(ONE-ACE)	0X70	0X38
ACE2(ALL)	0XD6	0X6B

I2C0_SCL_1V8 — I2C0_SCL_1V8 (MAKE_BASE=TRUE)
I2C0_SDA_1V8 — I2C0_SDA_1V8 (MAKE_BASE=TRUE)

I2C1

DEVICE	8-BIT	7-BIT
SKR AMP FHRT	0X70	0X38
SKR AMP FHRW	0X72	0X39
SKR AMP FHLT	0X74	0X3A
SKR AMP FHLW	0X76	0X3B

I2C1_SCL_1V8 — I2C1_SCL_1V8 (MAKE_BASE=TRUE)
I2C1_SDA_1V8 — I2C1_SDA_1V8 (MAKE_BASE=TRUE)

I2C2

DEVICE	8-BIT	7-BIT
SKR AMP CNRT	0X78	0X3C
SKR AMP CNRW	0X7A	0X3D
SKR AMP CNLT	0X7C	0X3E
SKR AMP CNLW	0X7E	0X3F
SKR BOOST MST	0X60	0X30
SKR BOOST SLV	0X62	0X31
BELLATRIX	0X26	0X13

I2C2_SCL_1V8 — I2C2_SCL_1V8, I2C2_SCL_1V8, I2C2_SCL_1V8 (MAKE_BASE=TRUE)
I2C2_SDA_1V8 — I2C2_SDA_1V8, I2C2_SDA_1V8, I2C2_SDA_1V8 (MAKE_BASE=TRUE)

I2C3

DEVICE	8-BIT	7-BIT
PENROSE ADC	0X90	0X48

I2C3_SCL_1V8 — I2C3_SCL_1V8 (MAKE_BASE=TRUE)
I2C3_SDA_1V8 — I2C3_SDA_1V8 (MAKE_BASE=TRUE)

I2C4

SEP I2C

I2C5

DEVICE	8-BIT	7-BIT
TCON	0X30-0X4E	0X18-0X27
TEMP (U2400)	0XE0	0X70

I2C5_SCL_1V8 — I2C5_SCL_1V8 (MAKE_BASE=TRUE)
I2C5_SDA_1V8 — I2C5_SDA_1V8 (MAKE_BASE=TRUE)

I2C0 AOP

DEVICE	8-BIT	7-BIT
ALS (C3)	0X72	0X39
ALS (C4)	0X52	0X29
YOGI(ROSALINE)	0X66	0X33
DOPPLER(ROSA.)	0XB0	0X58

I2C_AOP_I2CM0_SCL_1V8 — I2C_AOP_I2CM0_SCL_1V8 (MAKE_BASE=TRUE)
I2C_AOP_I2CM0_SDA_1V8 — I2C_AOP_I2CM0_SDA_1V8 (MAKE_BASE=TRUE)

I2C1 AOP

DEVICE	8-BIT	7-BIT
SCORPIUS	0XAA	0X55

I2C_AOP_I2CM1_SCL_1V8 — I2C_AOP_I2CM1_SCL_1V8 (MAKE_BASE=TRUE)
I2C_AOP_I2CM1_SDA_1V8 — I2C_AOP_I2CM1_SDA_1V8 (MAKE_BASE=TRUE)

ISP I2C0

NOT USED

ISP I2C1

DEVICE	8-BIT	7-BIT
JULIET	0X30	0X18

ISP_I2C1_SCL_1V8 — ISP_I2C1_SCL_1V8 (MAKE_BASE=TRUE)
ISP_I2C1_SDA_1V8 — ISP_I2C1_SDA_1V8 (MAKE_BASE=TRUE)

ISP I2C2

DEVICE	8-BIT	7-BIT
FCAM	0X20	0X10

ISP_I2C2_SCL_1V8 — ISP_I2C2_SCL_1V8 (MAKE_BASE=TRUE)
ISP_I2C2_SDA_1V8 — ISP_I2C2_SDA_1V8 (MAKE_BASE=TRUE)

ISP I2C3

DEVICE	8-BIT	7-BIT
TITUS	0XCC	0X66
RIGEL	0XAA	0X55

ISP_I2C3_SCL_1V8 — ISP_I2C3_SCL_1V8 (MAKE_BASE=TRUE)
ISP_I2C3_SDA_1V8 — ISP_I2C3_SDA_1V8 (MAKE_BASE=TRUE)

SMC I2C0

DEVICE	8-BIT	7-BIT
POTOMAC	0XEA	0X75

I2C_SMC_I2CM0_SCL_1V8 — I2C_SMC_I2CM0_SCL_1V8 (MAKE_BASE=TRUE)
I2C_SMC_I2CM0_SDA_1V8 — I2C_SMC_I2CM0_SDA_1V8 (MAKE_BASE=TRUE)

SMC I2C1

DEVICE	8-BIT	7-BIT
ACE2	0X70	0X38

I2C_SMC_I2CM1_SCL_1V8 — I2C_SMC_I2CM1_SCL_1V8 (MAKE_BASE=TRUE)
I2C_SMC_I2CM1_SDA_1V8 — I2C_SMC_I2CM1_SDA_1V8 (MAKE_BASE=TRUE)

SMC I2C2

DEVICE	8-BIT	7-BIT
GASGAUGE	0XAA	0X55

I2C_SMC_I2CM2_SCL_1V8 — I2C_SMC_I2CM2_SCL_1V8 (MAKE_BASE=TRUE)
I2C_SMC_I2CM2_SDA_1V8 — I2C_SMC_I2CM2_SDA_1V8 (MAKE_BASE=TRUE)

SMC I2C3

DEVICE	8-BIT	7-BIT
ATHENA	0X78	0X3C
APOLLO	0X80	0X40

I2C_SMC_I2CM3_SCL_1V8 — I2C_SMC_I2CM3_SCL_1V8 (MAKE_BASE=TRUE)
I2C_SMC_I2CM3_SDA_1V8 — I2C_SMC_I2CM3_SDA_1V8 (MAKE_BASE=TRUE)

SMC I2C4

NOT USED

ADAMS I2C1

DEVICE	8-BIT	7-BIT
RCAM1(FOCUS)	0X18	0X0C
RCAM1(IN)	0X20	0X10
STROBE1	0XC6	0X63
STROBE2	0XCE	0X67

I2C1_RCAM_PMU_SCL — I2C1_RCAM_PMU_SCL (MAKE_BASE=TRUE)
I2C1_RCAM_PMU_SDA — I2C1_RCAM_PMU_SDA (MAKE_BASE=TRUE)

ADAMS I2C2

DEVICE	8-BIT	7-BIT
JA PERISCOPE	0X20	0X10
JA RIKER	0X66	0X33
JA EEPROM	0XA2	0X51

I2C2_RCAM_PMU_SCL — I2C2_RCAM_PMU_SCL (MAKE_BASE=TRUE)
I2C2_RCAM_PMU_SDA — I2C2_RCAM_PMU_SDA (MAKE_BASE=TRUE)

ADAMS I2C3

DEVICE	8-BIT	7-BIT
WILL	0X80	0X40

I2C3_RCAM_PMU_SCL — I2C3_RCAM_PMU_SCL (MAKE_BASE=TRUE)
I2C3_RCAM_PMU_SDA — I2C3_RCAM_PMU_SDA (MAKE_BASE=TRUE)

ADAMS I2C4

DEVICE	8-BIT	7-BIT
RCAM2(OH)	0X40	0X20

I2C4_RCAM_PMU_SCL — I2C4_RCAM_PMU_SCL (MAKE_BASE=TRUE)
I2C4_RCAM_PMU_SDA — I2C4_RCAM_PMU_SDA (MAKE_BASE=TRUE)

SYNC_MASTER=J417_MLB_B SYNC_DATE=05/15/2019

PAGE TITLE

SOC: MISC & ALIASES

SOC: MAIN

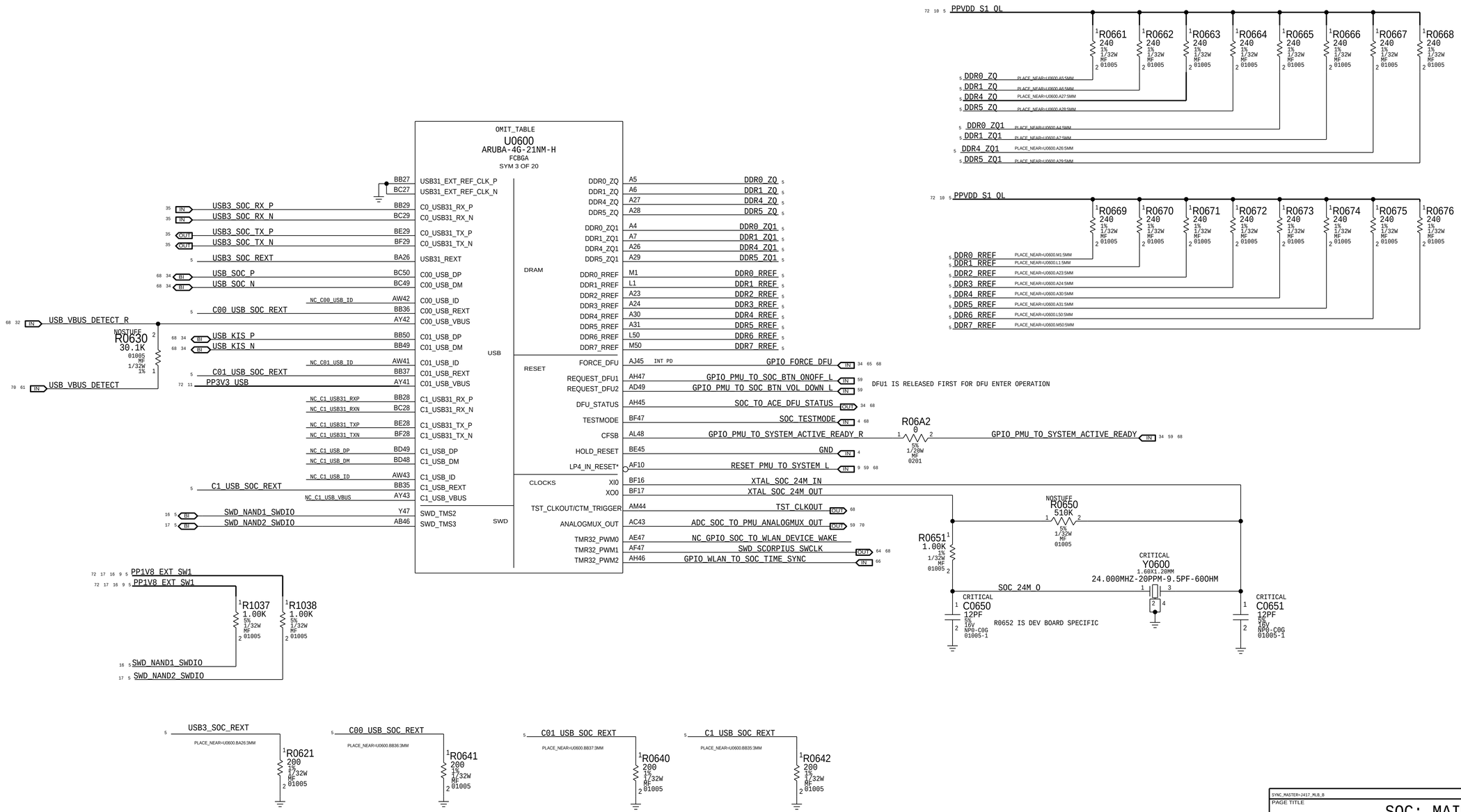

PART NUMBER	ALTERNATE FOR PART NUMBER	BOM OPTION	REF DES	COMMENTS:
197S0590	197S0591		Y0600	EPSON,24MHZ,XTAL
197S0588	197S0591		Y0600	TXC,24MHZ,XTAL

SYNC_MASTER=J417_MLB_B SYNC_DATE=05/15/2019

PAGE TITLE

SOC: MAIN

SOC: GPIO

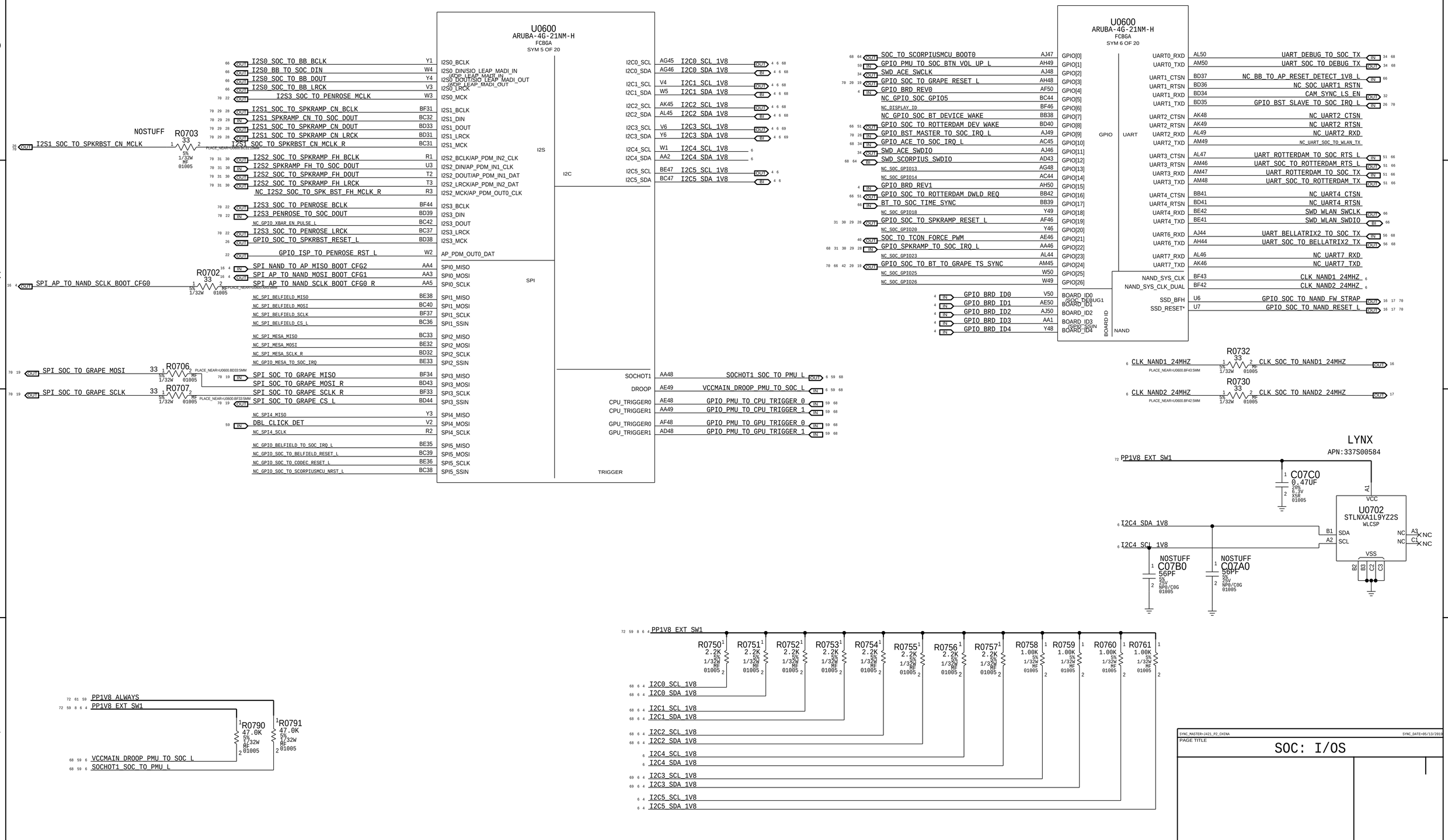

SYNC_MASTER=J421_P2_CHINA SYNC_DATE=05/13/2019

PAGE TITLE

SOC: I/OS

SOC: LPDP & MIPI

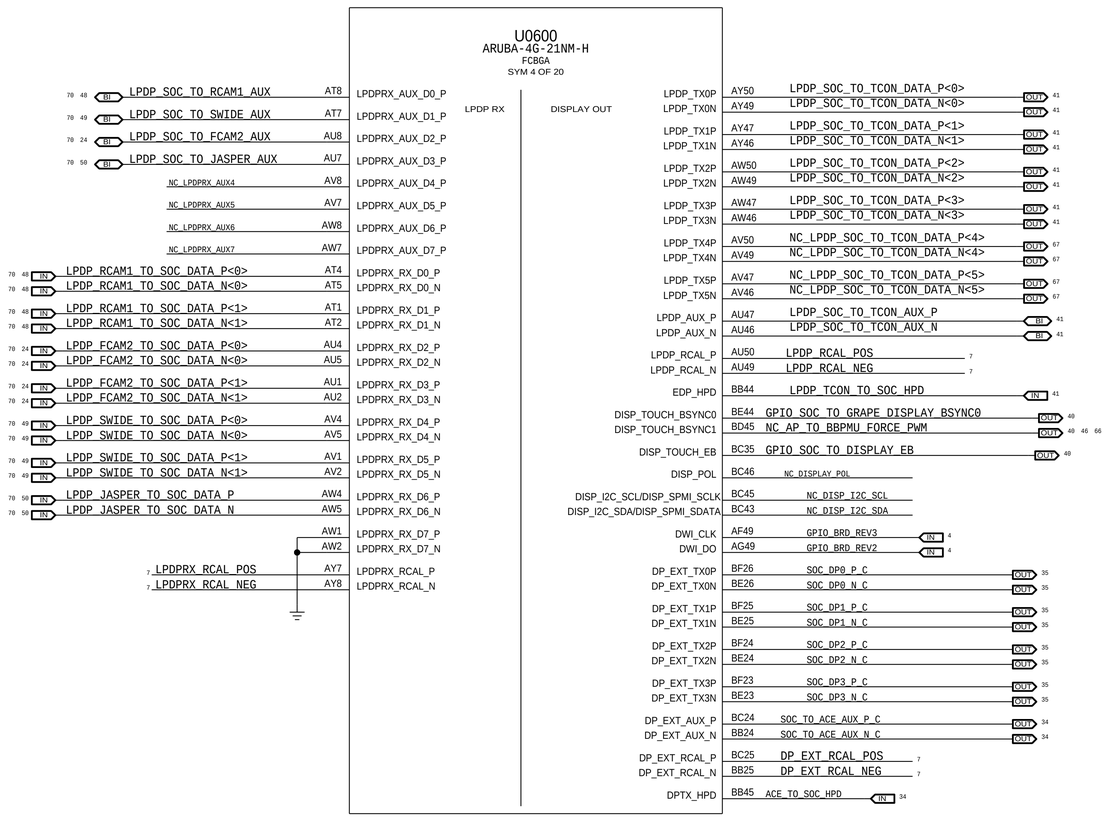

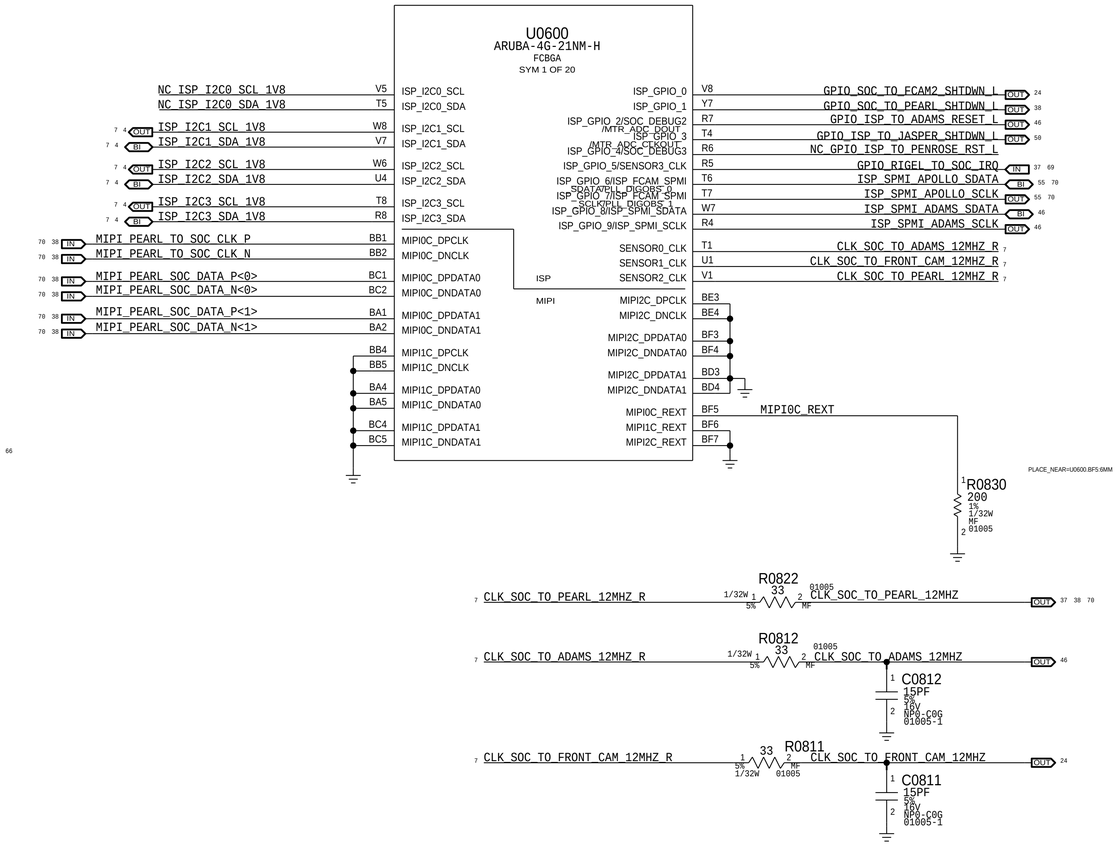

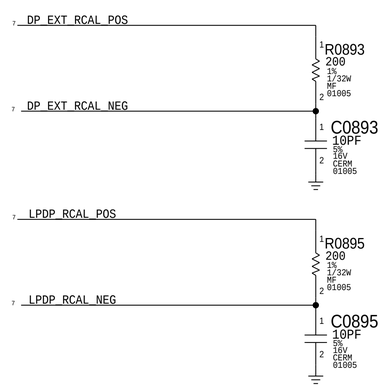

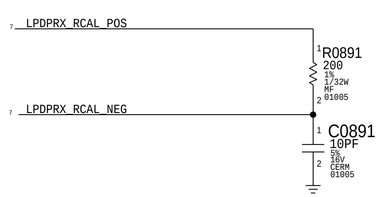

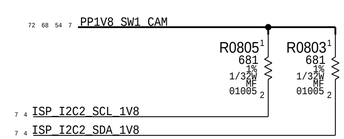

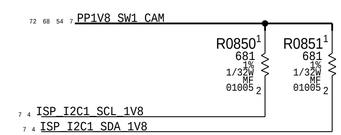

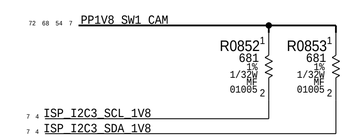

SYNC_MASTER=J421_P2_CHINA SYNC_DATE=05/13/2019

PAGE TITLE

SOC: LPDP & MIPI

SOC: PCIE

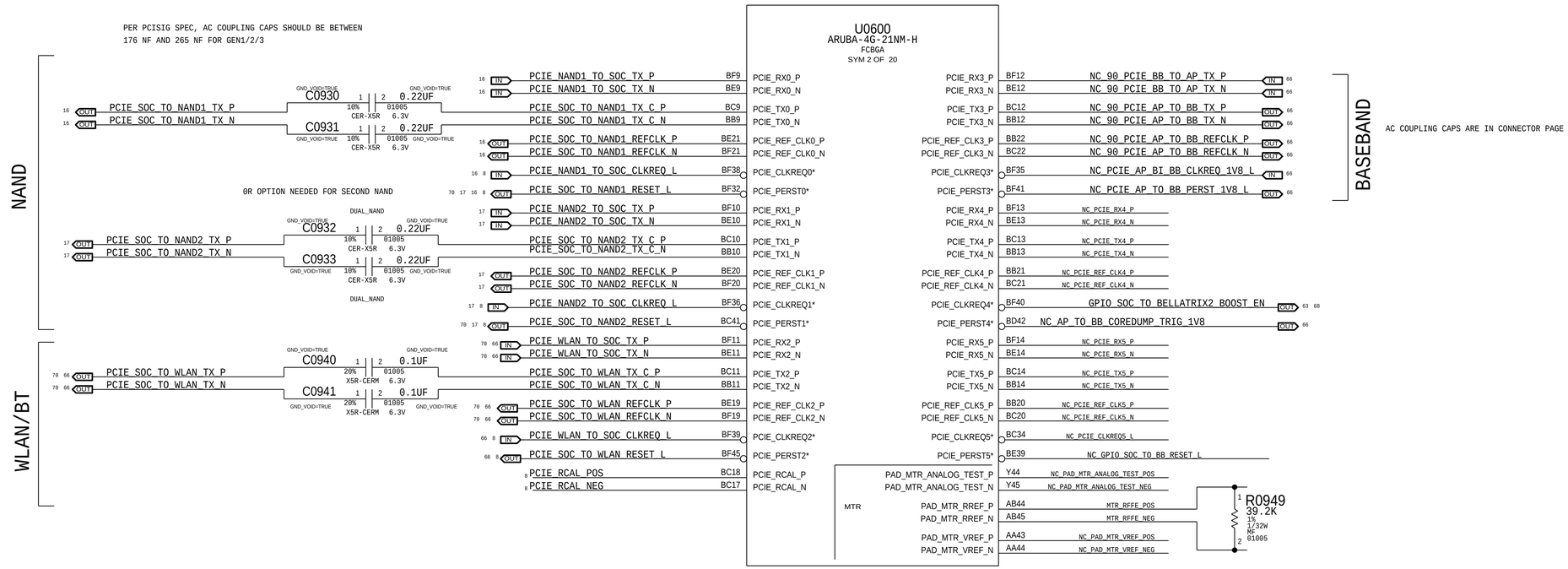

TO BE CHECKED WITH SEG- DO NOT MATCH WITH SILVAL
IS THE PULL-UP VOLTAGE CORRECT?

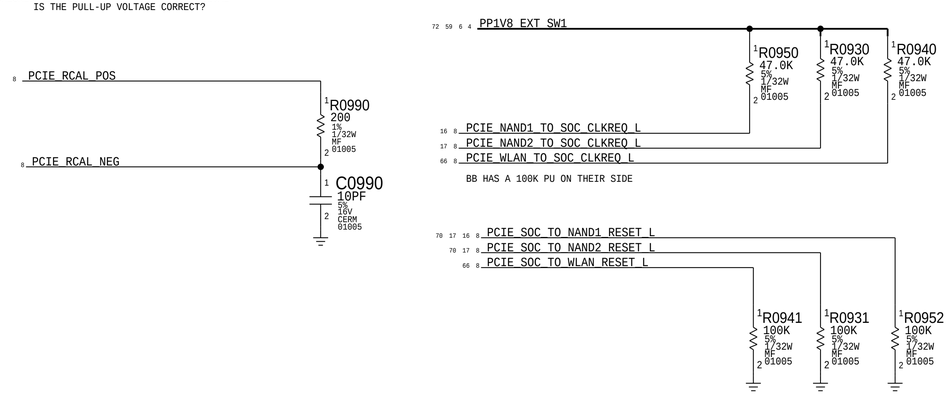

SYNC_MASTER=J421_P2_CHINA SYNC_DATE=05/13/2019

PAGE TITLE

SOC: PCIE

SOC: AOP

AOP I2C PULL-UPS

PP1V8_S3

R1050 1.00K 5% 1/32W MF 01005 — I2C_AOP_I2CM0_SCL_1V8
R1051 1.00K 5% 1/32W MF 01005 — I2C_AOP_I2CM0_SDA_1V8
R1052 1.00K 5% 1/32W MF 01005 — I2C_AOP_I2CM1_SCL_1V8
R1053 1.00K 5% 1/32W MF 01005 — I2C_AOP_I2CM1_SDA_1V8

PP1V8_S3

R1009 10K 5% 1/32W MF 01005 (NOSTUFF) — GPIO_PMU_TO_SOC_IRQ_L
R1010 10K 5% 1/32W MF 01005 (NOSTUFF) — GPIO_APOLLO_TO_PMU_SOC_IRQ_L

U0600
ARUBA-4G-21NM-H
FCBGA
SYM 7 OF 20

Signal	Pin	Function
GPIO_MOLY_TO_AOP_IRQ	AD1	AOP_FUNC[0] — AOP GPIO
GPIO_PHOSPHORUS_TO_AOP_IRQ	AD6	AOP_FUNC[1]
SPI_MOLY_CS_L	AD2	AOP_FUNC[2]
GPIO_KOBOL_TO_AOP_INT	AF6	AOP_FUNC[3]
SPI_KOBOL_CS_L	AD4	AOP_FUNC[4]
GPIO_KOBOL_TO_AOP_MOTION_INT	AE1	AOP_FUNC[5]
SPI_PHOSPHORUS_CS_L	AE3	AOP_FUNC[6]
GPIO_ALS_C3_TO_AOP_IRQ_L	AF1	AOP_FUNC[7]
GPIO_ALS_C4_TO_AOP_IRQ_L	AF2	AOP_FUNC[8]
GPIO_ORION_TO_AOP_IRQ	AF8	AOP_FUNC9/AOP_LPPLL
GPIO_ROSALINE_TO_AOP_IRQ_L	AF5	AOP_FUNC[10]
(USE SOC INTERNAL PULL-UP)	AF3	AOP_FUNC[11]
(USE SOC INTERNAL PULL-UP)	AG5	AOP_FUNC[12]
GPIO_GRAPE_TO_AOP_IRQ_L	AF4	AOP_FUNC13/AOP_PDM_CLK4
GPIO_GRAPE_TO_AOP_TIME_SYNC	AC6	AOP_FUNC14/AOP_PDM_CLK3
I2C_AOP_I2CM0_SCL_1V8	AE7	AOP_I2CM0_SCL — AOP I2C
I2C_AOP_I2CM0_SDA_1V8	AE6	AOP_I2CM0_SDA
I2C_AOP_I2CM1_SCL_1V8	AD7	AOP_I2CM1_SCL
I2C_AOP_I2CM1_SDA_1V8	AD8	AOP_I2CM1_SDA
GPIO_GRAPE_TO_SCORPIUS_TIME_SYNC	AH1	AOP_I2S0_BCLK — AOP I2S
GPIO_TITUS_TO_AOP_B2B_DETECT	AK5	AOP_I2S0_DIN
NC_GPM_TO_AOP_DMIC_DISABLE_WARN_L	AG8	AOP_I2S0_DOUT
NC_AOP_I2S0_LRCK	AH3	AOP_I2S0_LRCK
GPIO_AOP_TO_SCORPIUSMCU_NRST_L	AJ4	AOP_I2S0_MCK
DMIC2_MIC_SCLK	AG1	AOP_I2S1_BCLK/AOP_PDM_IN1_CLK
SLG_TO_AOP_DMIC_DISABLE_WARN_L	AG2	AOP_I2S1_DIN
DMIC3_MIC_SD	AH6	AOP_I2S1_DOUT/AOP_PDM_IN2_DAT
DMIC4_MIC_SCLK	AG7	AOP_I2S1_LRCK/AOP_PDM_IN2_CLK
DMIC3_MIC_SCLK	AJ5	AOP_I2S1_MCK/AOP_PDM_CLK2
DMIC1_MIC_SCLK	AF7	AOP_PDM_CLK0 — AOP PDM
DMIC1_MIC_SD	AK8	AOP_PDM_DATA0
DMIC2_MIC_SD	AE4	AOP_PDM_DATA1
NC_GPIO_AOP_TO_NFC	AG6	AOP_PDM_DATAOUT
GPIO_AOP_TO_ORION_HWEN	AJ7	AOP_PDM_OUT0_CLK
SPI_SENSORS_MISO	AC3	AOP_SPI_MISO — AOP SPI
SPI_SENSORS_MOSI_R	AC2	AOP_SPI_MOSI
SPI_SENSORS_SCLK_R	AC1	AOP_SPI_SCLK
NC_UART_BB_TO_AOP_TXD	AC5	AOP_UART0_RXD — AOP UART
NC_UART_AOP_TO_BB_TXD	AC4	AOP_UART0_TXD
GPIO_AOP_TO_WLAN_CONTEXT_B	AD3	AOP_UART1_RXD
GPIO_AOP_TO_WLAN_CONTEXT_A	AD5	AOP_UART1_TXD
UART_GRAPE_TO_AOP_TX	AC7	AOP_UART2_RXD
UART_AOP_TO_GRAPE_TX	AC8	AOP_UART2_TXD

Signal	Pin	Function
NUB_DOCK_ATTENTION/NUB_PDM_CLK1	AM2	NC_NUB_DOCK_ATTENTION
NUB_DOCK_CONNECT	AN5	USB_TO_SOC_DOCK_CONNECT (IN 34)
NUB_FUNC[15] — NUB GPIO	AM8	NC_NUB_FUNC15
NUB_FUNC[16]	AK2	GPIO_SCORPIUS_TO_AOP_IRQ (IN 64 68)
NUB_FUNC[17]	AM6	NC_NUB_FUNC17
NUB_FUNC[18]	AM5	NC_NUB_FUNC18
NUB_FUNC[19]	AM4	NC_NUB_FUNC19
NUB_FUNC[20]	AN7	NC_NUB_FUNC20
NUB_FUNC[21]	AN4	NC_AOP_TO_BBPMU_FORCE_PWM (OUT 66)
NUB_FUNC[22]	AL1	NC_NUB_FUNC22
NUB_SPMI_SCLK — NUB SPMI	AM7	NUB_SPMI_SCLK (9 70)
NUB_SPMI_SDATA	AL7	NUB_SPMI_SDATA (9 59 70)
NUB_SWD_TCK_OUT — NUB SWD	AK3	SWD_PERIPHERAL_SWCLK (9)
NUB_SWD_TMS0	AL3	NC_SWD_AOP_BI_BB_SWDIO (BI 66)
NUB_SWD_TMS1	AN6	SWD_LANAI_SWDIO (BI 9 19)
JTAG_SEL — NUB JTAG	AM1	JTAG_SOC_SEL (IN 4 68)
JTAG_TCK	AP1	JTAG_SOC_TCK (IN 34 68)
JTAG_TDI	AP4	TP_JTAG_SOC_TDI (IN 68)
JTAG_TDO	AP3	TP_JTAG_SOC_TDO (OUT 68)
JTAG_TMS	AP7	JTAG_SOC_TMS (BI 34 68)
JTAG_TRST*	AN8	TP_JTAG_SOC_TRST_L (IN 4 68)
SMC_I2CM0_SCL — SMC I2C	AK7	I2C_SMC_I2CM0_SCL_1V8 (OUT 4 9 68)
SMC_I2CM0_SDA	AH7	I2C_SMC_I2CM0_SDA_1V8 (BI 4 9 68)
SMC_I2CM1_SCL/SMC_UART1_TXD	AG3	I2C_SMC_I2CM1_SCL_1V8 (OUT 4 9 68)
SMC_I2CM1_SDA/SMC_UART1_RXD	AH4	I2C_SMC_I2CM1_SDA_1V8 (BI 4 9 68)
SMC_I2CM2_SCL	AJ6	I2C_SMC_I2CM2_SCL_1V8 (OUT 4 9 68)
SMC_I2CM2_SDA	AL6	I2C_SMC_I2CM2_SDA_1V8 (BI 4 9 68)
SMC_I2CM3_SCL	AK6	I2C_SMC_I2CM3_SCL_1V8 (OUT 4 9 68)
SMC_I2CM3_SDA	AJ1	I2C_SMC_I2CM3_SDA_1V8 (BI 4 9 68)
SMC_I2CM4_SCL	AK4	NC_I2C_SMC_I2CM4_SCL_1V8
SMC_I2CM4_SDA	AL4	NC_I2C_SMC_I2CM4_SDA_1V8
SMC_UART0_RXD — SMC UART	AJ8	NC_SMC_UART0_RXD
SMC_UART0_TXD	AG4	NC_GPIO_SMC_TO_USBPD_RST_L
SMC_GPIO0 — SMC GPIO	AJ3	GPIO_POTOMAC_TO_SOC_TO_PMU_IRQ_L (IN 59 61)
SMC_GPIO1	AJ2	GPIO_ACE_TO_SMC_IRQ_L (IN 34 68)
RT_CLK32768 — CLOCKS AND RESET	AM3	CLK_PMU_TO_AOP_32K (IN 59 68)
CLK24M_OUT	AK1	CLK_GRAPE_24MHZ — R0731 33 5% 1/32W MF 01005 (PLACE_NEAR=U0600.AK1:5MM) — CLK_SOC_TO_GRAPE_24MHZ (OUT 19)
CFSB_AON	AN3	RESET_PMU_TO_SYSTEM_L (IN 5 9 59 68)
COLD_RESET*	AN2	RESET_PMU_TO_SYSTEM_L_R_CRESET — R0610 0.00 1/32W 0% 01005 MF — RESET_PMU_TO_SYSTEM_L (IN 5 9 59 68)
AON_SLEEP1_RESET*	AN1	NC_AON_SLEEP1_RESET_L
WDOG	AP6	WDOG_SOC (OUT 4)

R0681 47.0K, R0680 47.0K, R0682 47.0K — 5% 1/32W MF 01005 — PP1V8_S3 (9 20 65 72) — FROM SOC DATASHEET SEC:5.24.1

R0683 10K 5% 1/32W MF 01005 — PP1V8_S3 (9 20 65 72)
C0683 0.1UF 20% 6.3V X5R-CERM 01005

SMC I2C PULL-UPS

PP1V8_S3 (72 64 59 41)

Resistor	Value	Signal
R85A1	4.7K 5% 1/32W MF 01005	I2C_SMC_I2CM0_SCL_1V8
R85A0	4.7K 5% 1/32W MF 01005	I2C_SMC_I2CM0_SDA_1V8
R1064	4.7K 5% 1/32W MF 01005	I2C_SMC_I2CM1_SCL_1V8
R1063	4.7K 5% 1/32W MF 01005	I2C_SMC_I2CM1_SDA_1V8
R1002	4.7K 5% 1/32W MF 01005	I2C_SMC_I2CM2_SCL_1V8
R1006	4.7K 5% 1/32W MF 01005	I2C_SMC_I2CM2_SDA_1V8
R09A1	2.2K 5% 1/32W MF 01005	I2C_SMC_I2CM3_SCL_1V8
R09A2	2.2K 5% 1/32W MF 01005	I2C_SMC_I2CM3_SDA_1V8

THESE GATES HAVE BACKPOWER PROTECTION

PP1V8_EXT_SW1 (72 17 16 9 9) — C1031 0.1UF 20% 6.3V X5R-CERM 01005 — U1031 74AUP1G34GX SOT1226
SWD_PERIPHERAL_SWCLK (9) — R1032 33 5% 1/32W MF 01005 (PLACE_NEAR=U0600.AK3:13MM) — SWD_PER_NAND1_SWCLK_R — SWD_NAND1_SWCLK (OUT 16)

PP1V8_EXT_SW1 (72 17 16 9 9) — C1035 0.1UF 20% 6.3V X5R-CERM 01005 — U1035 74AUP1G34GX SOT1226
SWD_PERIPHERAL_SWCLK (9) — R1035 33 5% 1/32W MF 01005 (PLACE_NEAR=U0600.AK3:13MM) — SWD_PER_NAND2_SWCLK_R — SWD_NAND2_SWCLK (OUT 17)

PP1V8_S2_GRAPE (72 20 19 9) — C1032 0.1UF 20% 6.3V X5R-CERM 01005 — U1032 74AUP1G34GX SOT1226
SWD_PERIPHERAL_SWCLK (9) — R1033 33 5% 1/32W MF 01005 (PLACE_NEAR=U0600.AK3:13MM) — SWD_PER_GRAPE_SWCLK_R — SWD_LANAI_SWCLK (OUT 19)

PP1V8_S2_GRAPE (72 20 19 9) — R0612 1.00K 5% 1/32W MF 01005 — SWD_LANAI_SWDIO (19 9)

PP1V8_S3 (72 34 32) — C1033 0.1UF 20% 6.3V X5R-CERM 01005 — U1034 74AUP1G34GX SOT1226
SWD_PERIPHERAL_SWCLK (9) — R1034 33 5% 1/32W MF 01005 (PLACE_NEAR=U0600.AK3:13MM) — SWD_PER_BB_SWCLK_R — NC — SWD_AOP_TO_MANY_SWDCLK (OUT 66)

NUB_SPMI_SCLK (70 9) — PLACE_NEAR=U0600.AM7:10MM R79E1 33 01005 MF 5% 1/32W — NUB_SPMI_SCLK_ATHENA (OUT 59)
NUB_SPMI_SDATA (BI 9 59 70)
R9153 1.00M 5% 1/32W MF 01005 NOSTUFF
R9155 1.00M 5% 1/32W MF 01005 NOSTUFF

SYNC_MASTER=J421_P2_CHINA — SYNC_DATE=05/13/2019
PAGE TITLE: SOC: AOP

SOC: POWER (DDR,SRAM)

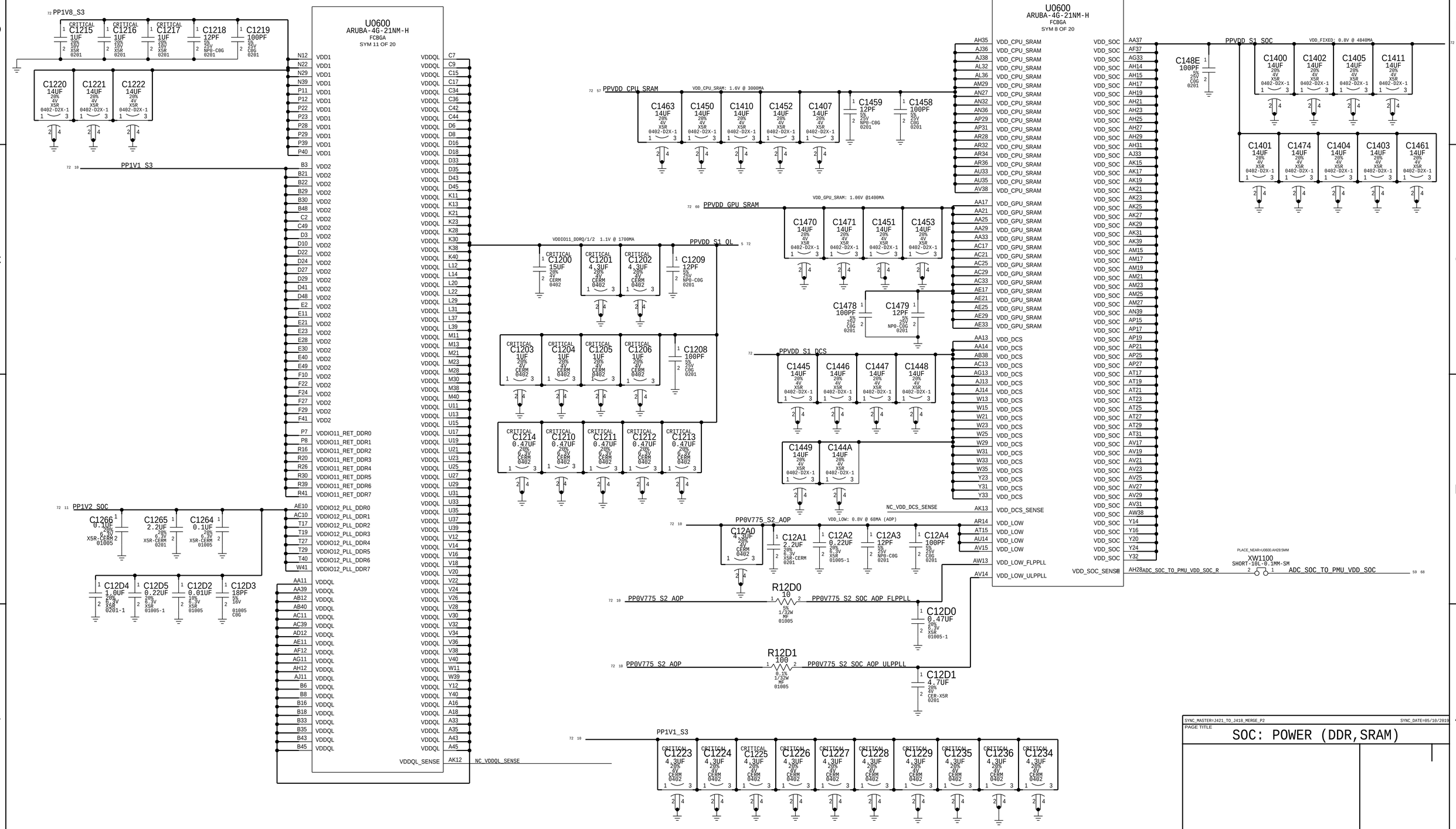

SOC: POWER (IO)

VDD12_PLL_CPU: 1.2V @ 7MA
VDD12_PLL_SOC: 1.2V @ 4MA
VDD12_PLL_GPU: 1.2V @ 7MA
VDD12_PLL_LPDP: 1.2V @ 9MA
VDD12_PCIE_REFBUF: 1.2V @ 48MA
VDD12_LPDP_TX: 1.2V @ 45MA
VDD12_LPDP_RX: 1.2V @ 55MA
VDD12_USB3: 1.2V @ 25MA
VDD12_DP_EXT: 1.2V @ 40MA

VDD18_AOP: 1.8V @ TBDMA
VDD18_USB: 1.8V @ 17MA
VDD18_TSADC: 1.8V @ 10.4MA
VDDIO18_GRP: 1.8V @ TBDMA
VDD18_MIPI: 1.8V @ 2MA
VDD18_XTAL: 1.8V @ 2MA
VDD18_LPOSC: 1.8V @ 1MA
VDD18_FMON: 1.8V @ 1MA
VDD18_PCIE: 1.8V @ 81.7MA
VDD33_USB: 3.3V @ 5MA

PART NUMBER	ALTERNATE FOR PART NUMBER	BOM OPTION	REF DES	COMMENTS:
138S00049	138S0831		C1221 & MORE	RDAR://PROBLEM/19974064

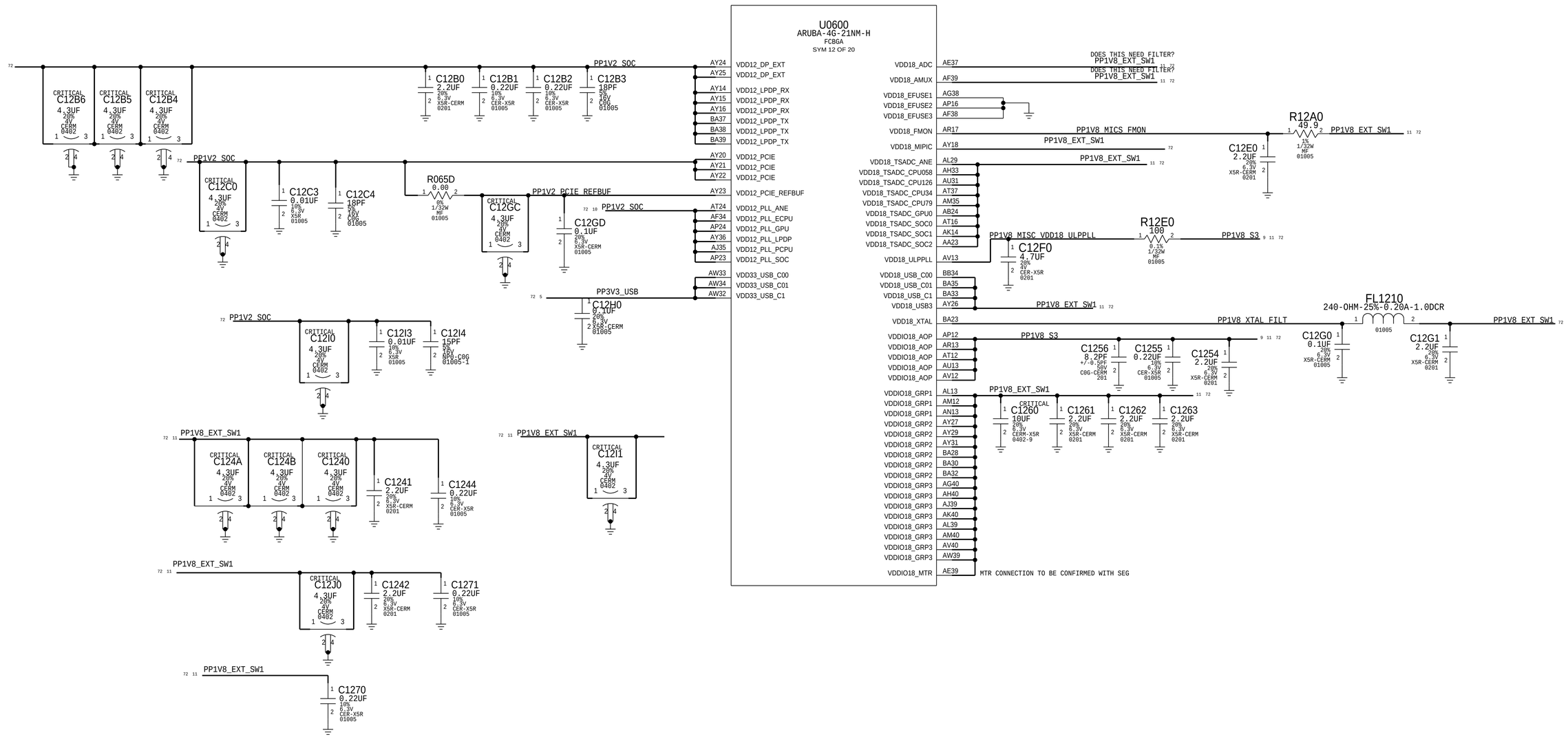

SYNC_MASTER=J421_TO_J418_MERGE_P2 SYNC_DATE=05/10/2019

PAGE TITLE

SOC: POWER (IO)

SOC: POWER (CPU, GPU)

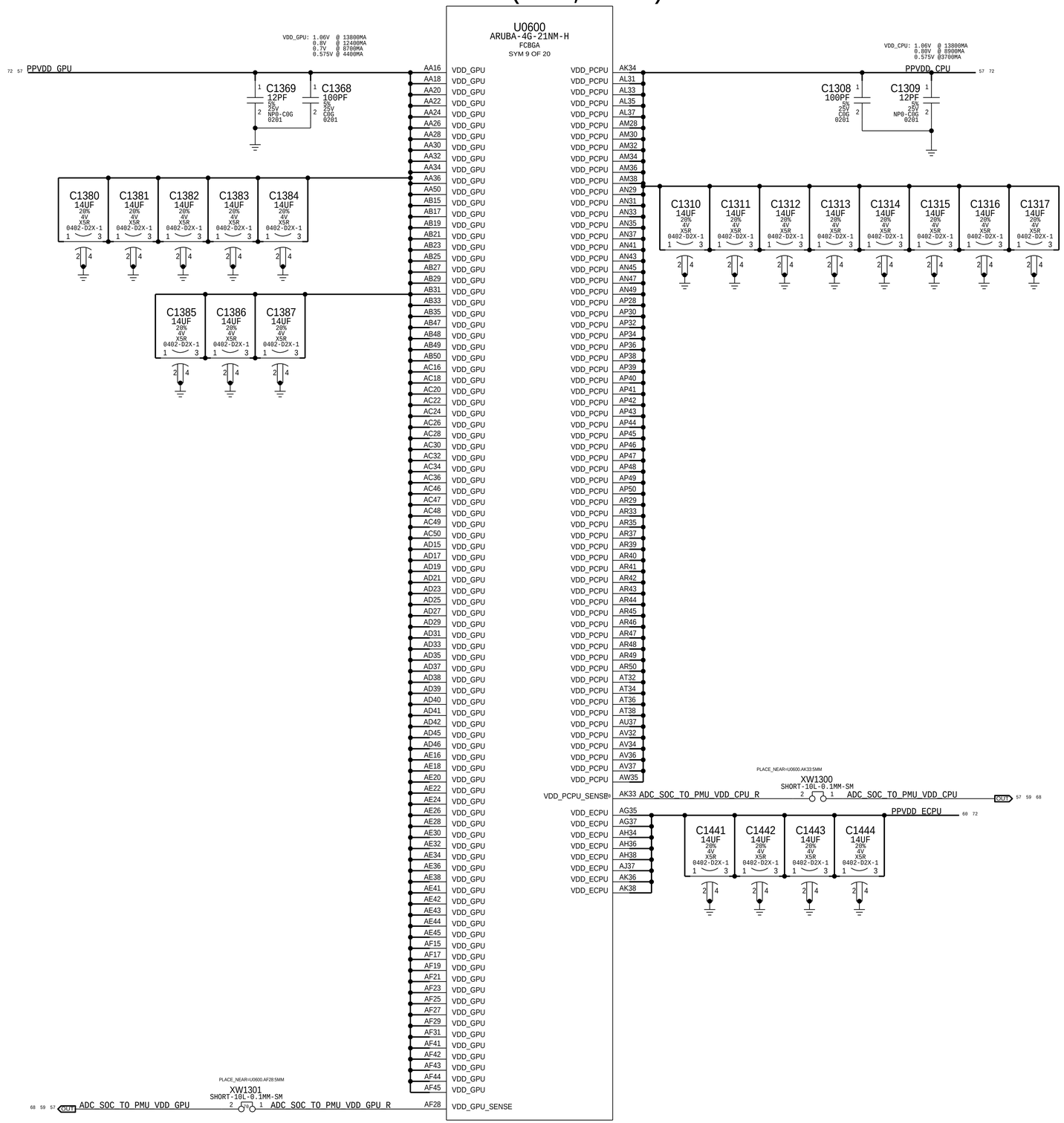

SYNC_MASTER=J421_P2_CHINA SYNC_DATE=05/13/2019

PAGE TITLE

SOC: POWER (CPU, GPU)

SOC: POWER (SRAM, SOC)

VDD_FIXED_CPU: 0.8V @ 6MA
VDD_FIXED_PCIE:0.8V @ 290.1MA
VDD_FIXED_PCIE_REFBUF: 0.8V @ 20MA
VDD_FIXED_USB: 0.8V @ 6.6MA
VDD_FIXED_USB3: 0.8V @ 89.4MA
VDD_FIXED_USB3: 0.8V @ 89.4MA
VDD_FIXED_PLL_SOC: 0.8V @ 10MA
VDD_FIXED_PLL_GPU: 0.8V @ 6MA
VDD_FIXED_PLL_DDR: 0.8V @ 4MA
VDD_FIXED_MIPI: 0.8V @ 10MA
VDD_FIXED_PLL_LPDP: 0.8V @ 2MA
VDD_FIXED_LPDP_TX: 0.8V @ 43.2MA
VDD_FIXED_LPDP_RX: 0.8V @ 5.2MA

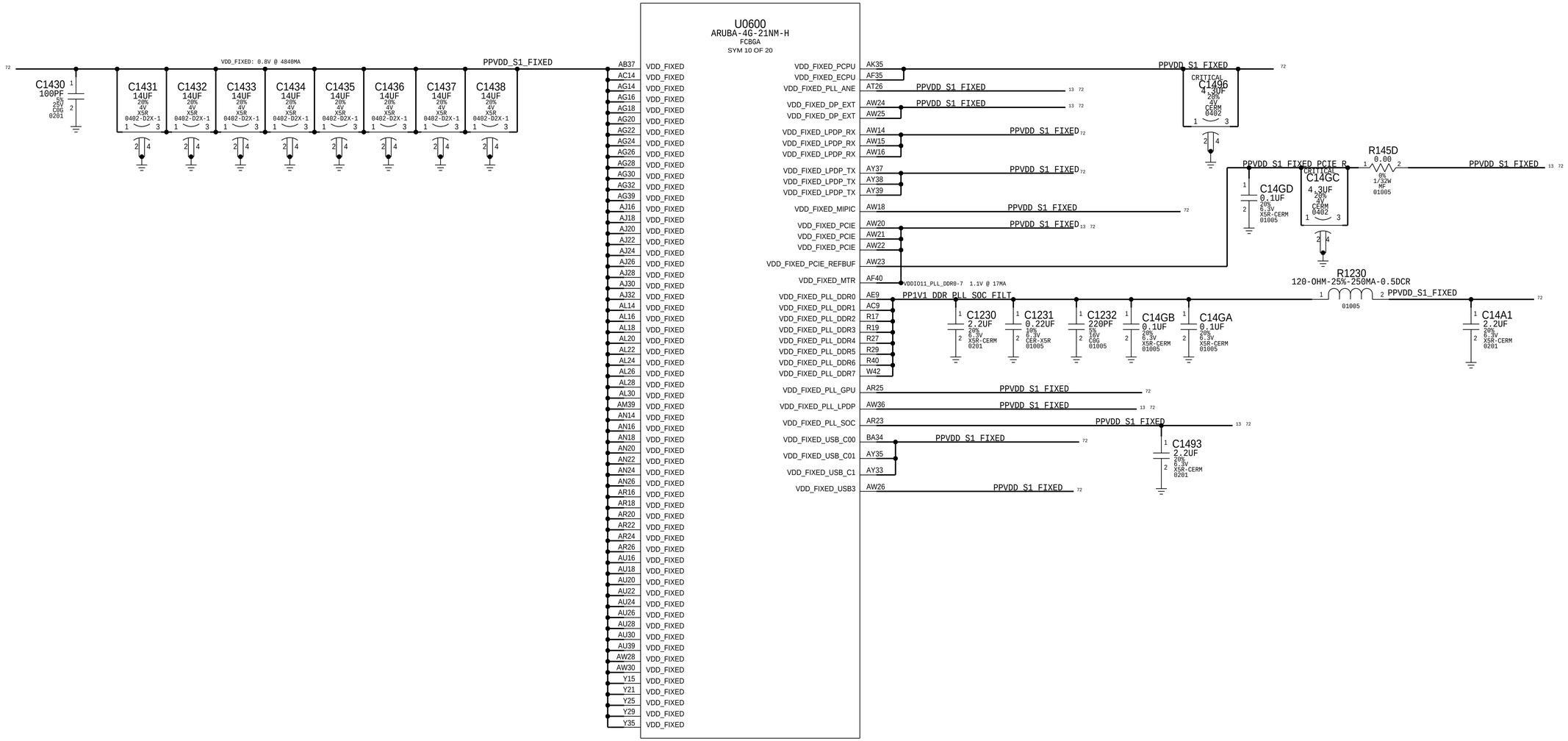

SYNC_MASTER=J421_P2_CHINA SYNC_DATE=05/13/2019

PAGE TITLE

SOC: POWER (SRAM, SOC)

SOC: GND (1)

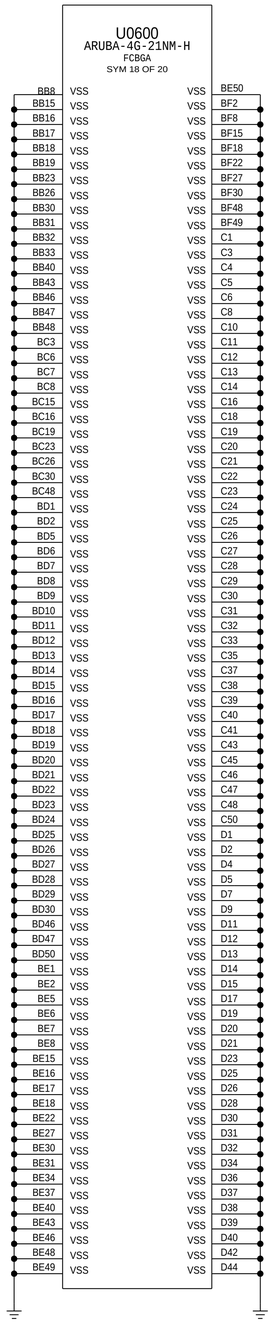

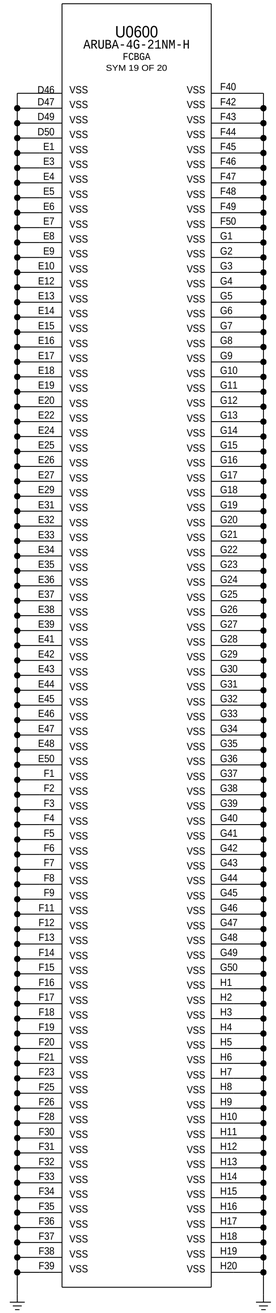

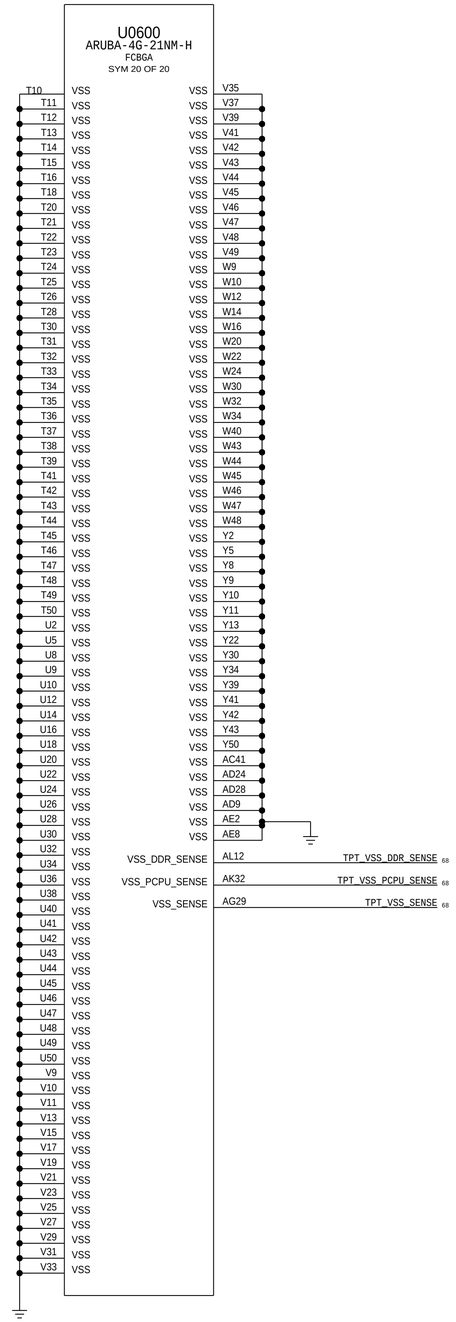

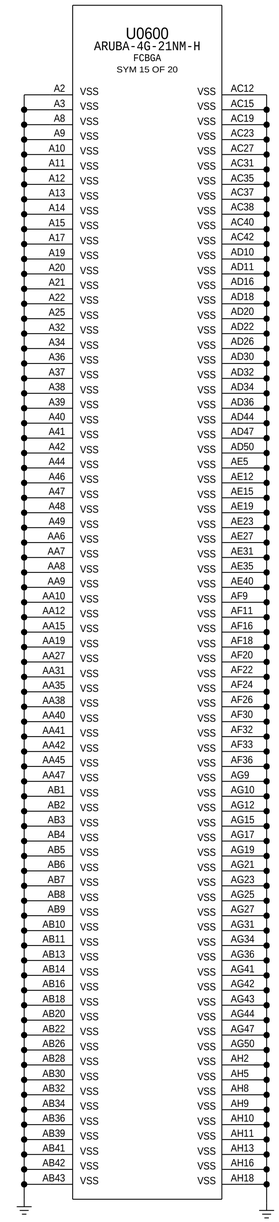

SYNC_MASTER=J421_P2_CHINA SYNC_DATE=05/13/2019

PAGE TITLE

SOC: GND

SOC: GND (2)

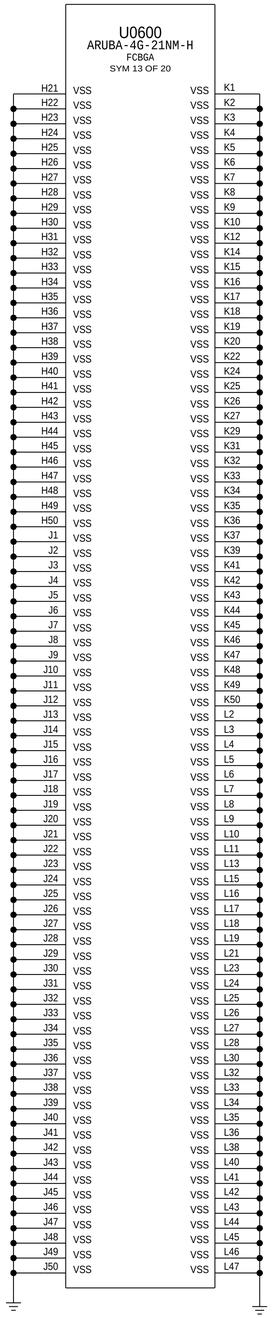

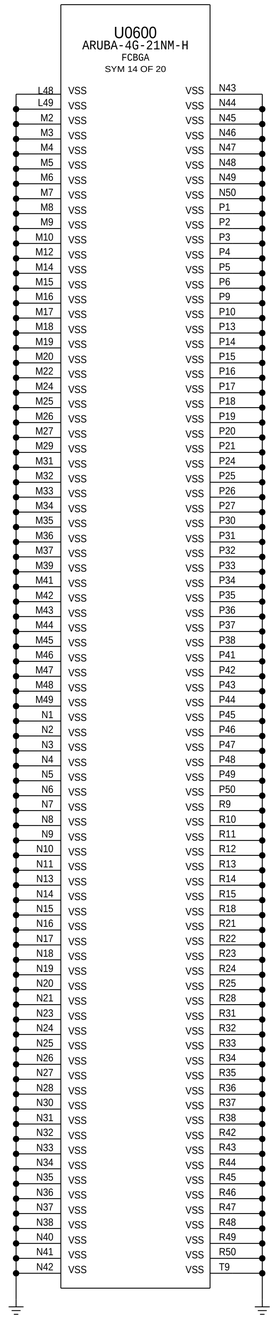

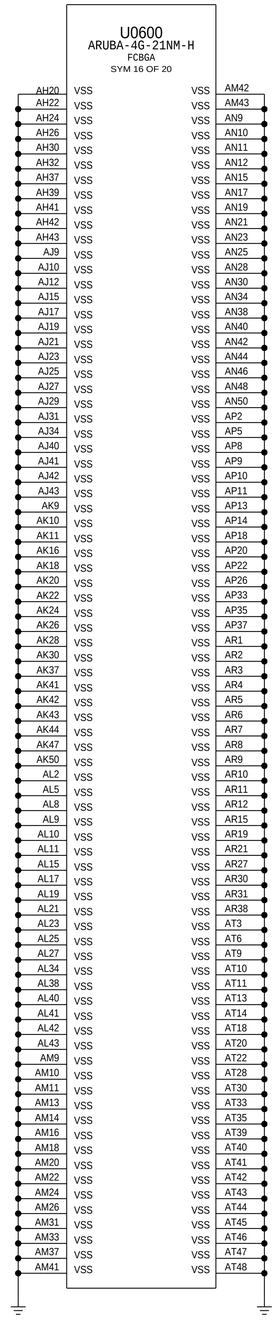

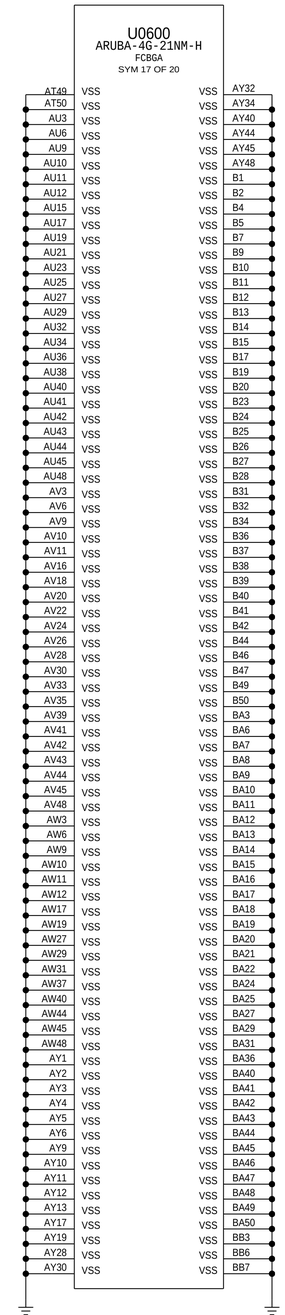

SYNC_MASTER=J421_P2_CHINA SYNC_DATE=05/13/2019

PAGE TITLE

SOC: GND-2

S4E NAND1

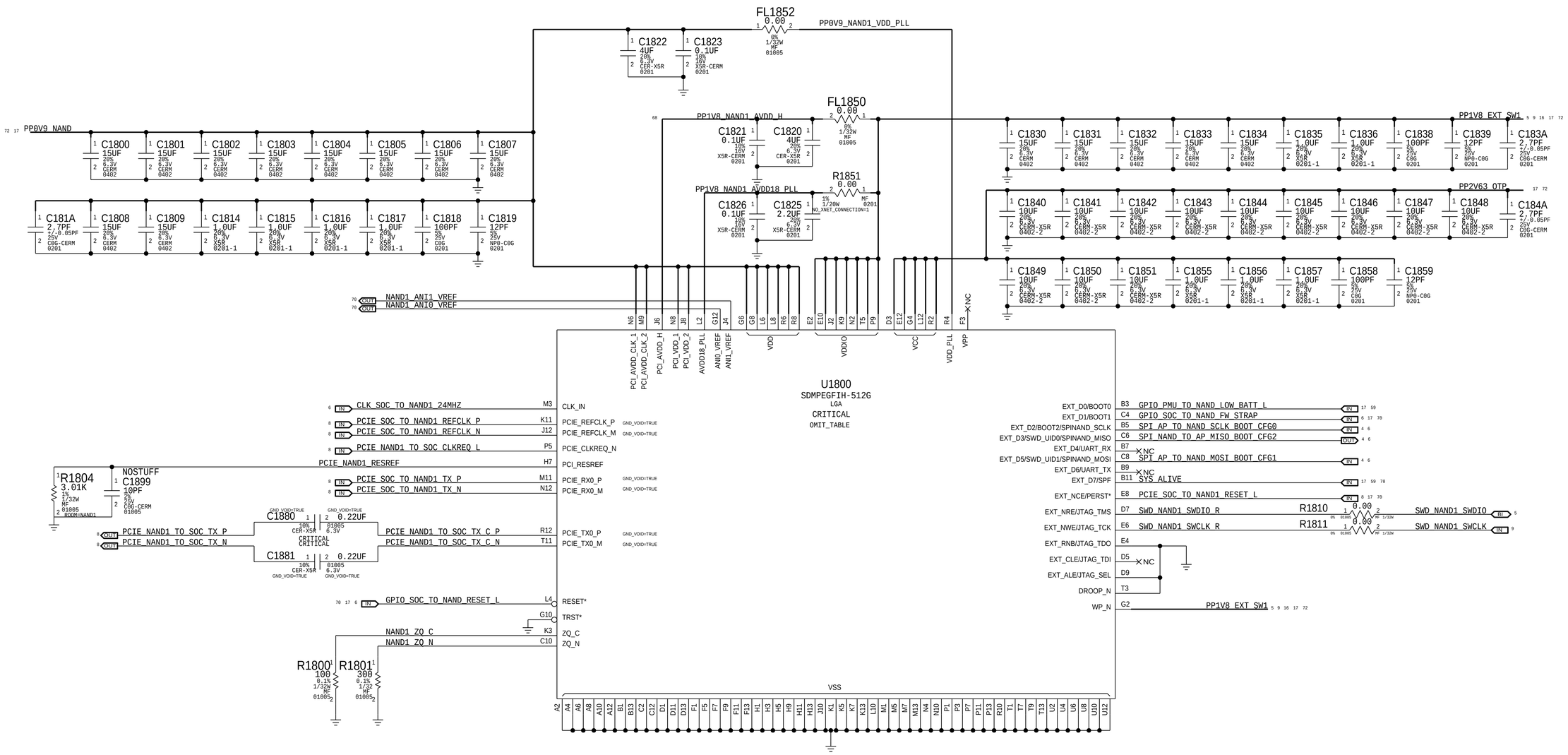

SYNC_MASTER=J421_P2_CHINA SYNC_DATE=05/13/2019

PAGE TITLE

NAND: NAND1

S4E NAND2

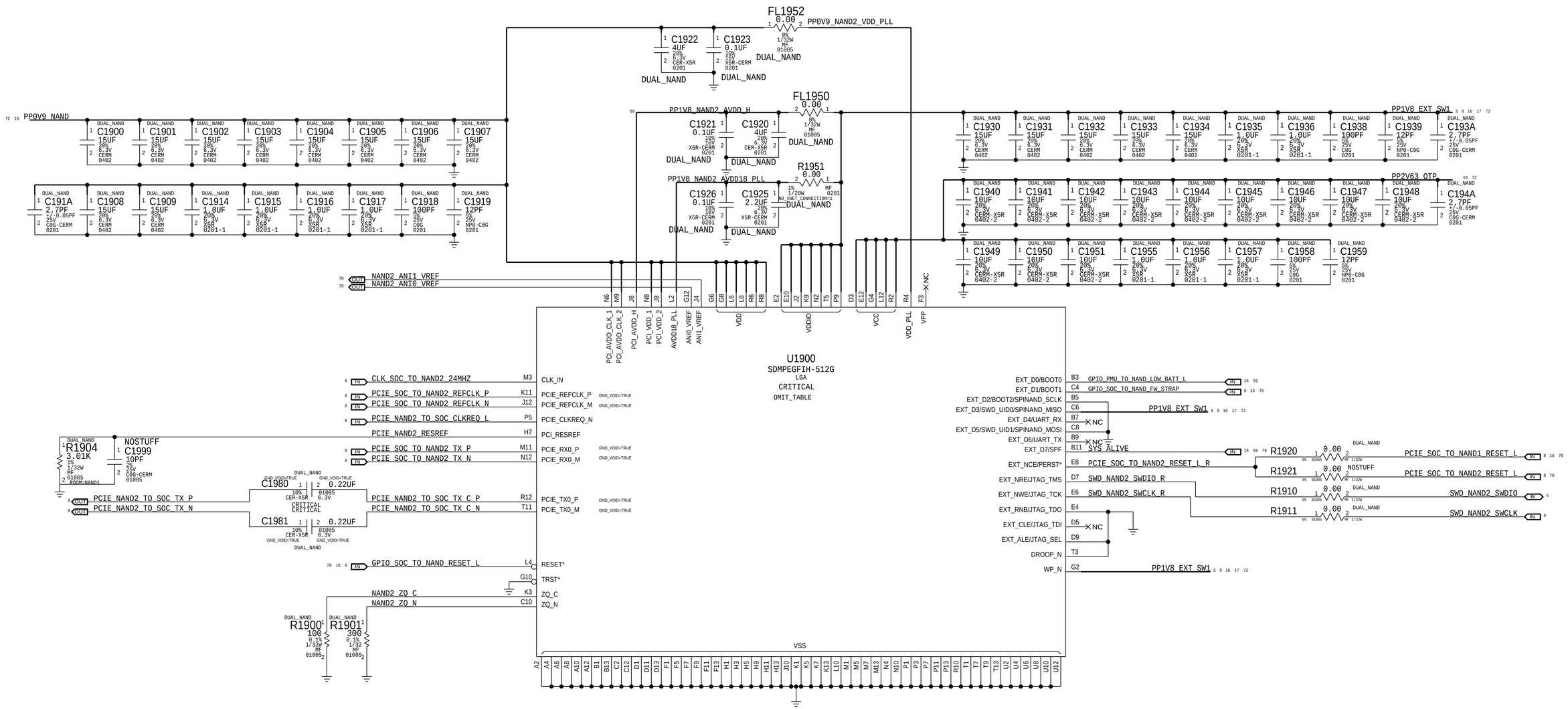

SYNC_MASTER=J421_P2_CHINA SYNC_DATE=05/13/2019

PAGE TITLE

NAND: NAND2

SENSORS

PRIMARY KOBOL - ACCEL & GYRO

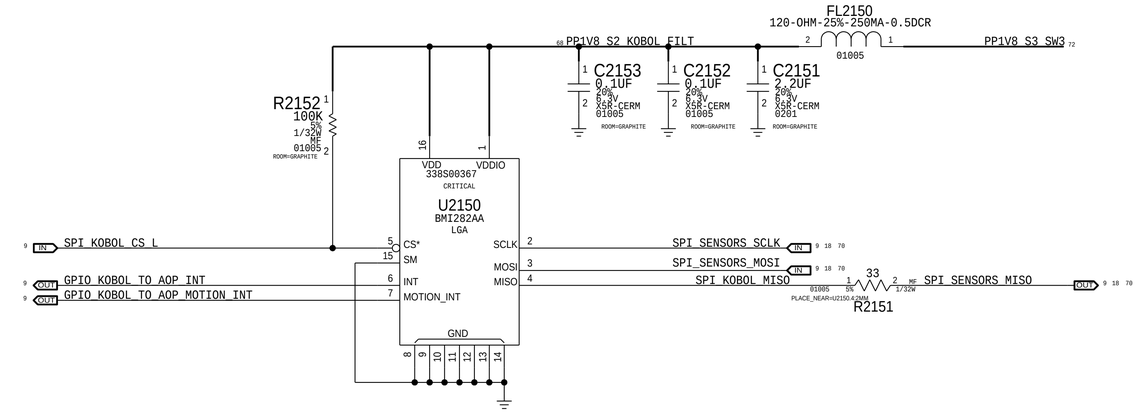

COMPASS/DMIC FLEX B2B

MATCH J417_COMPASS_FLEX 4.0.0

MLB SIDE: 516S00176
FLEX SIDE: 516S00175

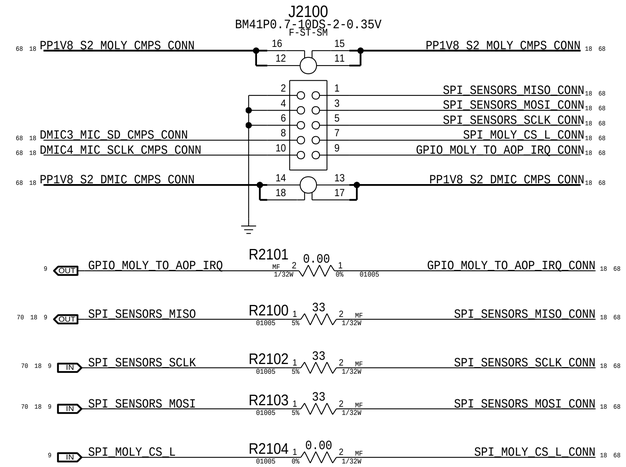

PHOSPHORUS2

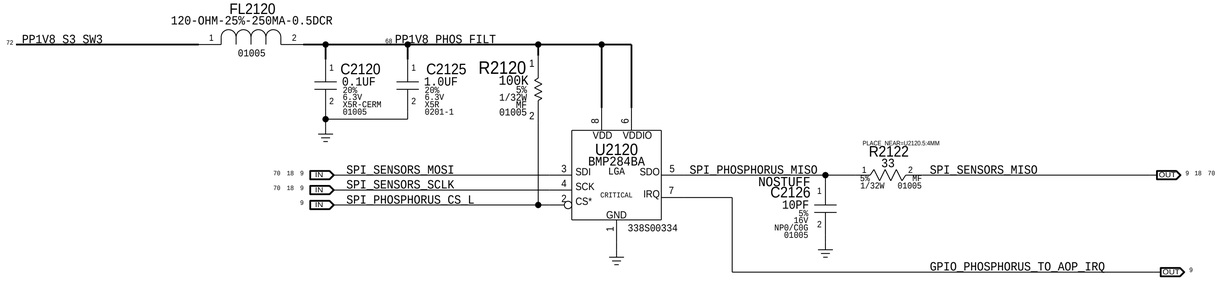

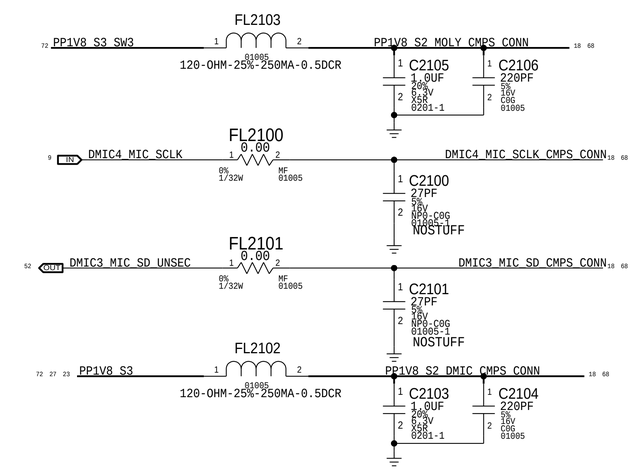

PAGE TITLE

SENSOR: KOBOL, PHOS2, MOLY

LANAI MASTER

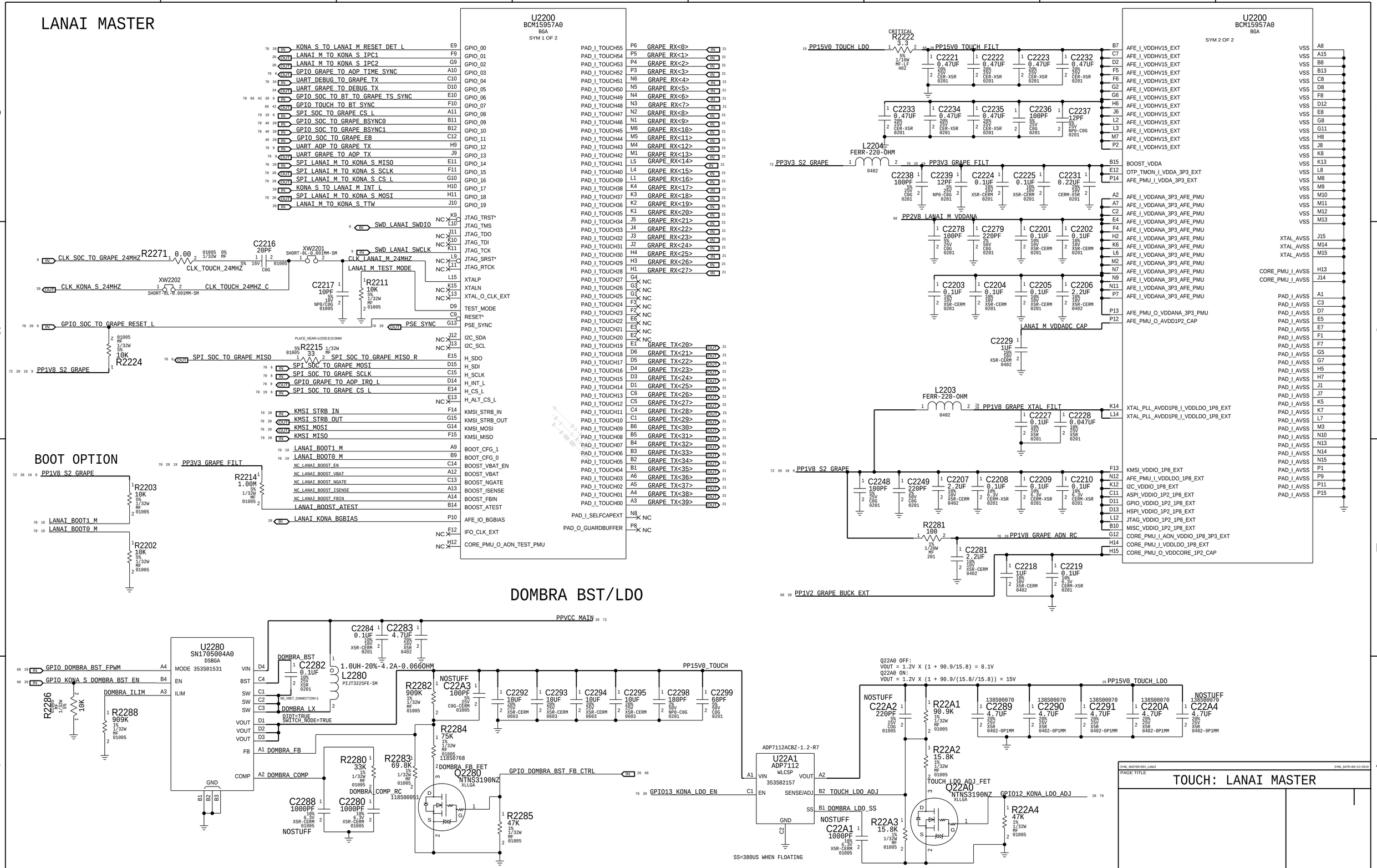

KONA: SLAVE

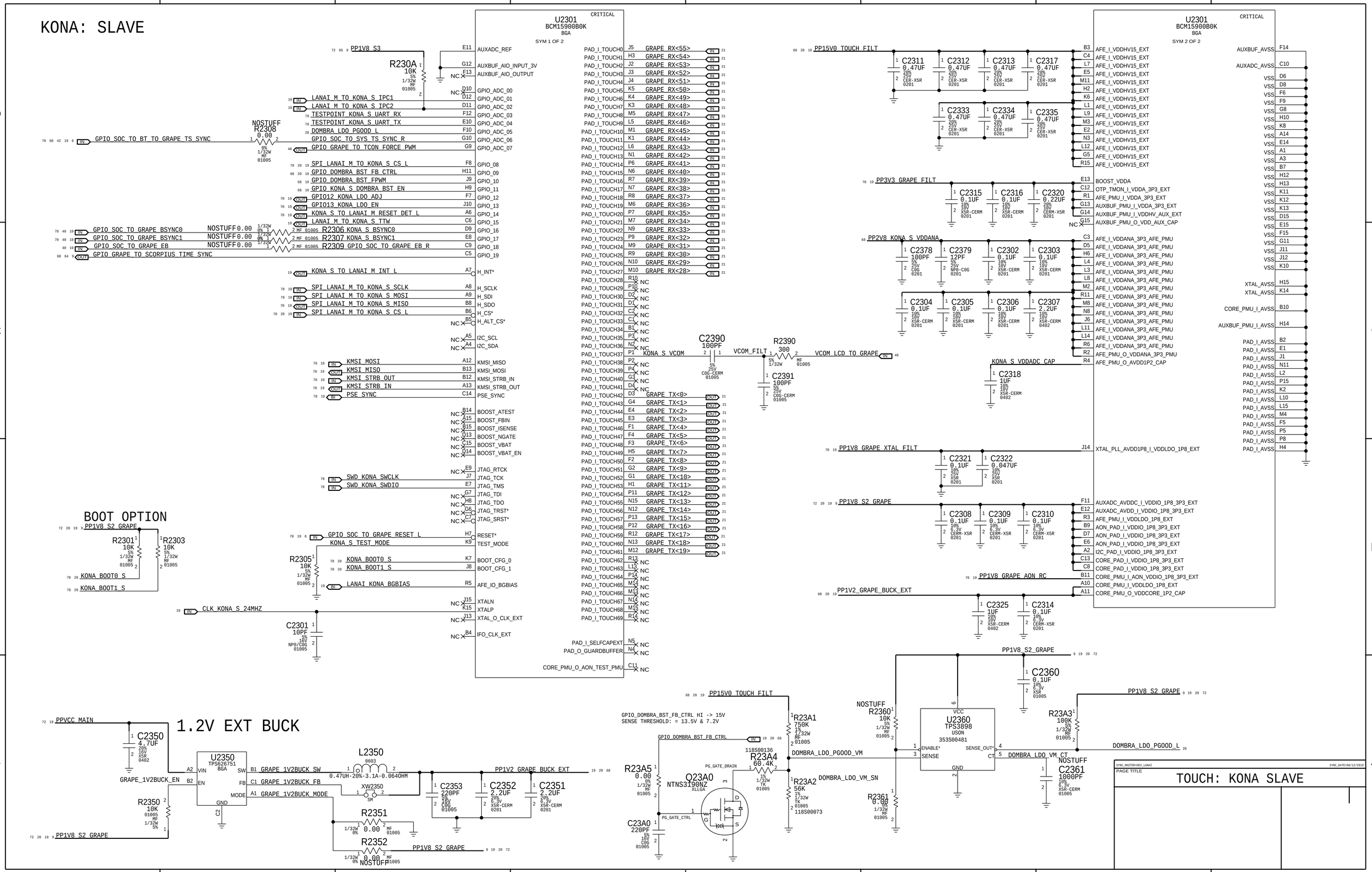
U2301
BCM15900B0K
BGA
SYM 1 OF 2
CRITICAL
U2301
BCM15900B0K
BGA
SYM 2 OF 2
CRITICAL
PP1V8_S3
R230A 10K 5% 1/32W MF 01005
NOSTUFF R2308 0.00 0% 1/32W MF 01005
GPIO_SOC_TO_BT_TO_GRAPE_TS_SYNC
LANAI_M_TO_KONA_S_IPC1
LANAI_M_TO_KONA_S_IPC2
TESTPOINT_KONA_S_UART_RX
TESTPOINT_KONA_S_UART_TX
DOMBRA_LDO_PGOOD_L
GPIO_SOC_TO_SYS_TS_SYNC_R
GPIO_GRAPE_TO_TCON_FORCE_PWM
SPI_LANAI_M_TO_KONA_S_CS_L
GPIO_DOMBRA_BST_FB_CTRL
GPIO_DOMBRA_BST_FPWM
GPIO_KONA_S_DOMBRA_BST_EN
GPIO12_KONA_LDO_ADJ
GPIO13_KONA_LDO_EN
KONA_S_TO_LANAI_M_RESET_DET_L
LANAI_M_TO_KONA_S_TTW
GPIO_SOC_TO_GRAPE_BSYNC0
GPIO_SOC_TO_GRAPE_BSYNC1
GPIO_SOC_TO_GRAPE_EB
GPIO_GRAPE_TO_SCORPIUS_TIME_SYNC
NOSTUFF 0.00 R2306 KONA_S_BSYNC0
NOSTUFF 0.00 R2307 KONA_S_BSYNC1
NOSTUFF 0.00 R2309 GPIO_SOC_TO_GRAPE_EB_R
KONA_S_TO_LANAI_M_INT_L
SPI_LANAI_M_TO_KONA_S_SCLK
SPI_LANAI_M_TO_KONA_S_MOSI
SPI_LANAI_M_TO_KONA_S_MISO
SPI_LANAI_M_TO_KONA_S_CS_L
KMSI_MOSI
KMSI_MISO
KMSI_STRB_OUT
KMSI_STRB_IN
PSE_SYNC
SWD_KONA_SWCLK
SWD_KONA_SWDIO
GPIO_SOC_TO_GRAPE_RESET_L
KONA_S_TEST_MODE
KONA_BOOT0_S
KONA_BOOT1_S
LANAI_KONA_BGBIAS
CLK_KONA_S_24MHZ
C2301 10PF 5% 25V NP0/C0G 01005
BOOT OPTION
PP1V8_S2_GRAPE
R2301 10K 5% 1/32W MF 01005
R2303 10K 5% 1/32W MF 01005
KONA_BOOT0_S
KONA_BOOT1_S
R2305 10K 5% 1/32W MF 01005
AUXADC_REF
AUXBUF_AIO_INPUT_3V
AUXBUF_AIO_OUTPUT
GPIO_ADC_00
GPIO_ADC_01
GPIO_ADC_02
GPIO_ADC_03
GPIO_ADC_04
GPIO_ADC_05
GPIO_ADC_06
GPIO_ADC_07
GPIO_08
GPIO_09
GPIO_10
GPIO_11
GPIO_12
GPIO_13
GPIO_14
GPIO_15
GPIO_16
GPIO_17
GPIO_18
GPIO_19
H_INT*
H_SCLK
H_SDI
H_SDO
H_CS*
H_ALT_CS*
I2C_SCL
I2C_SDA
KMSI_MISO
KMSI_MOSI
KMSI_STRB_IN
KMSI_STRB_OUT
PSE_SYNC
BOOST_ATEST
BOOST_FBIN
BOOST_ISENSE
BOOST_NGATE
BOOST_VBAT
BOOST_VBAT_EN
JTAG_RTCK
JTAG_TCK
JTAG_TMS
JTAG_TDI
JTAG_TDO
JTAG_TRST*
JTAG_SRST*
RESET*
TEST_MODE
BOOT_CFG_0
BOOT_CFG_1
AFE_IO_BGBIAS
XTALN
XTALP
XTAL_O_CLK_EXT
IFO_CLK_EXT
PAD_I_SELFCAPEXT
PAD_O_GUARDBUFFER
CORE_PMU_O_AON_TEST_PMU
PAD_I_TOUCH0
PAD_I_TOUCH1
PAD_I_TOUCH2
PAD_I_TOUCH3
PAD_I_TOUCH4
PAD_I_TOUCH5
PAD_I_TOUCH6
PAD_I_TOUCH7
PAD_I_TOUCH8
PAD_I_TOUCH9
PAD_I_TOUCH10
PAD_I_TOUCH11
PAD_I_TOUCH12
PAD_I_TOUCH13
PAD_I_TOUCH14
PAD_I_TOUCH15
PAD_I_TOUCH16
PAD_I_TOUCH17
PAD_I_TOUCH18
PAD_I_TOUCH19
PAD_I_TOUCH20
PAD_I_TOUCH21
PAD_I_TOUCH22
PAD_I_TOUCH23
PAD_I_TOUCH24
PAD_I_TOUCH25
PAD_I_TOUCH26
PAD_I_TOUCH27
PAD_I_TOUCH28
PAD_I_TOUCH29
PAD_I_TOUCH30
PAD_I_TOUCH31
PAD_I_TOUCH32
PAD_I_TOUCH33
PAD_I_TOUCH34
PAD_I_TOUCH35
PAD_I_TOUCH36
PAD_I_TOUCH37
PAD_I_TOUCH38
PAD_I_TOUCH39
PAD_I_TOUCH40
PAD_I_TOUCH41
PAD_I_TOUCH42
PAD_I_TOUCH43
PAD_I_TOUCH44
PAD_I_TOUCH45
PAD_I_TOUCH46
PAD_I_TOUCH47
PAD_I_TOUCH48
PAD_I_TOUCH49
PAD_I_TOUCH50
PAD_I_TOUCH51
PAD_I_TOUCH52
PAD_I_TOUCH53
PAD_I_TOUCH54
PAD_I_TOUCH55
PAD_I_TOUCH56
PAD_I_TOUCH57
PAD_I_TOUCH58
PAD_I_TOUCH59
PAD_I_TOUCH60
PAD_I_TOUCH61
PAD_I_TOUCH62
PAD_I_TOUCH63
PAD_I_TOUCH64
PAD_I_TOUCH65
PAD_I_TOUCH66
PAD_I_TOUCH67
PAD_I_TOUCH68
PAD_I_TOUCH69
GRAPE_RX<55>
GRAPE_RX<54>
GRAPE_RX<53>
GRAPE_RX<52>
GRAPE_RX<51>
GRAPE_RX<50>
GRAPE_RX<49>
GRAPE_RX<48>
GRAPE_RX<47>
GRAPE_RX<46>
GRAPE_RX<45>
GRAPE_RX<44>
GRAPE_RX<43>
GRAPE_RX<42>
GRAPE_RX<41>
GRAPE_RX<40>
GRAPE_RX<39>
GRAPE_RX<38>
GRAPE_RX<37>
GRAPE_RX<36>
GRAPE_RX<35>
GRAPE_RX<34>
GRAPE_RX<33>
GRAPE_RX<32>
GRAPE_RX<31>
GRAPE_RX<30>
GRAPE_RX<29>
GRAPE_RX<28>
GRAPE_TX<0>
GRAPE_TX<1>
GRAPE_TX<2>
GRAPE_TX<3>
GRAPE_TX<4>
GRAPE_TX<5>
GRAPE_TX<6>
GRAPE_TX<7>
GRAPE_TX<8>
GRAPE_TX<9>
GRAPE_TX<10>
GRAPE_TX<11>
GRAPE_TX<12>
GRAPE_TX<13>
GRAPE_TX<14>
GRAPE_TX<15>
GRAPE_TX<16>
GRAPE_TX<17>
GRAPE_TX<18>
GRAPE_TX<19>
KONA_S_VCOM
C2390 100PF 5% 25V C0G-CERM 01005
VCOM_FILT
R2390 300 5% 1/32W MF 01005
VCOM_LCD_TO_GRAPE
C2391 100PF 5% 25V C0G-CERM 01005
PP15V0_TOUCH_FILT
C2311 0.47UF 20% 25V CER-X5R 0201
C2312 0.47UF 20% 25V CER-X5R 0201
C2313 0.47UF 20% 25V CER-X5R 0201
C2317 0.47UF 20% 25V CER-X5R 0201
C2333 0.47UF 20% 25V CER-X5R 0201
C2334 0.47UF 20% 25V CER-X5R 0201
C2335 0.47UF 20% 25V CER-X5R 0201
PP3V3_GRAPE_FILT
C2315 0.1UF 10% 16V X5R-CERM 0201
C2316 0.1UF 10% 16V X5R-CERM 0201
C2320 0.22UF 20% 10V CERM-X5R 0201
PP2V8_KONA_S_VDDANA
C2378 100PF 5% 25V C0G 0201
C2379 12PF 5% 25V NP0-C0G 0201
C2302 0.1UF 10% 16V X5R-CERM 0201
C2303 0.1UF 10% 16V X5R-CERM 0201
C2304 0.1UF 10% 16V X5R-CERM 0201
C2305 0.1UF 10% 16V X5R-CERM 0201
C2306 0.1UF 10% 16V X5R-CERM 0201
C2307 2.2UF 10% 16V X5R-CERM 0402
KONA_S_VDDADC_CAP
C2318 1UF 10% 16V X5R-CERM 0402
PP1V8_GRAPE_XTAL_FILT
C2321 0.1UF 10% 25V X5R 0201
C2322 0.047UF 10% 25V X5R 0201
PP1V8_S2_GRAPE
C2308 0.1UF 10% 6.3V CERM-X5R 0201
C2309 0.1UF 10% 6.3V CERM-X5R 0201
C2310 0.1UF 10% 6.3V CERM-X5R 0201
PP1V8_GRAPE_AON_RC
PP1V2_GRAPE_BUCK_EXT
C2325 1UF 10% 16V X5R-CERM 0402
C2314 0.1UF 10% 6.3V CERM-X5R 0201
BOOST_VDDA
OTP_TMON_I_VDDA_3P3_EXT
AFE_PMU_I_VDDA_3P3_EXT
AUXBUF_PMU_I_VDDA_3P3_EXT
AUXBUF_PMU_I_VDDHV_AUX_EXT
AUXBUF_PMU_O_VDD_AUX_CAP
AFE_I_VDDANA_3P3_AFE_PMU
AFE_PMU_O_VDDANA_3P3_PMU
AFE_PMU_O_AVDD1P2_CAP
XTAL_PLL_AVDD1P8_I_VDDLDO_1P8_EXT
AUXADC_AVDDC_I_VDDIO_1P8_3P3_EXT
AUXADC_AVDD_I_VDDIO_1P8_3P3_EXT
AFE_PMU_I_VDDLDO_1P8_EXT
AON_PAD_I_VDDIO_1P8_3P3_EXT
AON_PAD_I_VDDIO_1P8_3P3_EXT
AON_PAD_I_VDDIO_1P8_3P3_EXT
I2C_PAD_I_VDDIO_1P8_3P3_EXT
CORE_PAD_I_VDDIO_1P8_3P3_EXT
CORE_PAD_I_VDDIO_1P8_3P3_EXT
CORE_PMU_I_AON_VDDIO_1P8_3P3_EXT
CORE_PMU_I_VDDLDO_1P8_EXT
CORE_PMU_O_VDDCORE_1P2_CAP
AUXBUF_AVSS
AUXADC_AVSS
VSS
XTAL_AVSS
CORE_PMU_I_AVSS
AUXBUF_PMU_I_AVSS
PAD_I_AVSS
1.2V EXT BUCK
PPVCC_MAIN
C2350 4.7UF 20% 16V X5R 0402
U2350 TPS82671 BGA
VIN
EN
SW
FB
MODE
GND
GRAPE_1V2BUCK_EN
GRAPE_1V2BUCK_SW
GRAPE_1V2BUCK_FB
GRAPE_1V2BUCK_MODE
L2350 0603 0.47UH-20%-3.1A-0.0640HM
XW2350 SM
R2350 10K 5% 1/32W MF 01005
R2351 0.00 5% 1/32W MF 01005
R2352 0.00 5% 1/32W MF 01005
NOSTUFF
C2353 220PF 5% 16V C0G 01005
C2352 2.2UF 20% 6.3V X5R-CERM 0201
C2351 2.2UF 20% 6.3V X5R-CERM 0201
PP1V2_GRAPE_BUCK_EXT
PP1V8_S2_GRAPE
PP15V0_TOUCH_FILT
GPIO_DOMBRA_BST_FB_CTRL HI -> 15V
SENSE THRESHOLD: = 13.5V & 7.2V
GPIO_DOMBRA_BST_FB_CTRL
R23A1 750K 1% 1/32W MF 01005
DOMBRA_LDO_PGOOD_VM
118S00136
R23A4 60.4K 1% 1/32W TK 01005
R23A5 0.00 5% 1/32W MF 01005
PG_GATE_DRAIN
Q23A0 NTNS3190NZ XLLGA
PG_GATE_CTRL
C23A0 220PF 5% 16V C0G 01005
R23A2 56K 1% 1/32W TK 01005 118S00073
DOMBRA_LDO_VM_SN
PP1V8_S2_GRAPE
C2360 0.1UF 10% 6.3V X5R 01005
NOSTUFF R2360 10K 5% 1/32W MF 01005
U2360 TPS3898 USON 353S00481
VCC
ENABLE*
SENSE
SENSE_OUT*
CT
GND
DOMBRA_LDO_VM_CT
R2361 0.00 5% 1/32W MF 01005
NOSTUFF C2361 1000PF 10% 6.3V X5R-CERM 01005
R23A3 100K 5% 1/32W MF 01005
PP1V8_S2_GRAPE
DOMBRA_LDO_PGOOD_L
SYNC_MASTER=DEV_LANA1
SYNC_DATE=08/12/2019
PAGE TITLE
TOUCH: KONA SLAVE

TOUCH FLEX CONNECTOR (SENSE)

MATCHES J317_GRAPE_FLEX_LS_MAIN_V2 2.0.0

MLB: 516S00419
FLEX: 516S00420

MOUNTING PINS CAN BE USED FOR ELECTRICAL CONNECTIONS

CRITICAL
J2400
BM28P0.6-56DS-2-0.35V
F-ST-SM

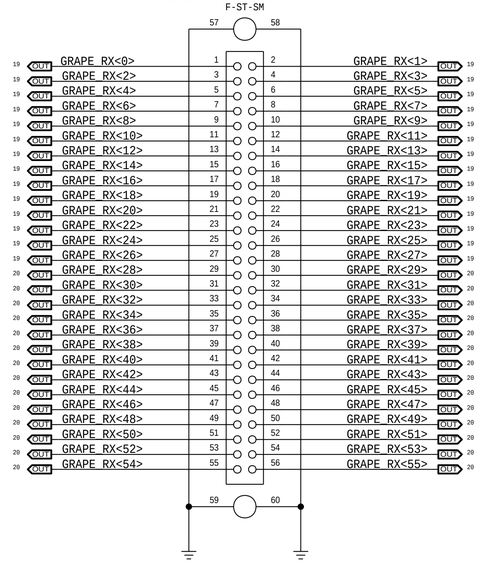

TOUCH FLEX CONNECTOR (DRIVE)

MATCHES J317_GRAPE_FLEX_LS_MAIN_V2 2.0.0

MLB: 516S00099
FLEX: 516S00098

MOUNTING PINS CAN BE USED FOR ELECTRICAL CONNECTIONS

CRITICAL
J2401
505066-5022
F-ST-SM

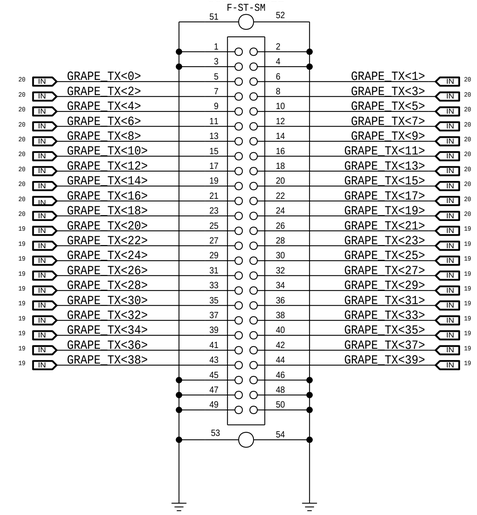

SYNC_MASTER=J317_MLB_B SYNC_DATE=11/16/2018

PAGE TITLE

TOUCH: GRAPE CONN

PENROSE ADC

7-BIT I2C ADD: 0X48

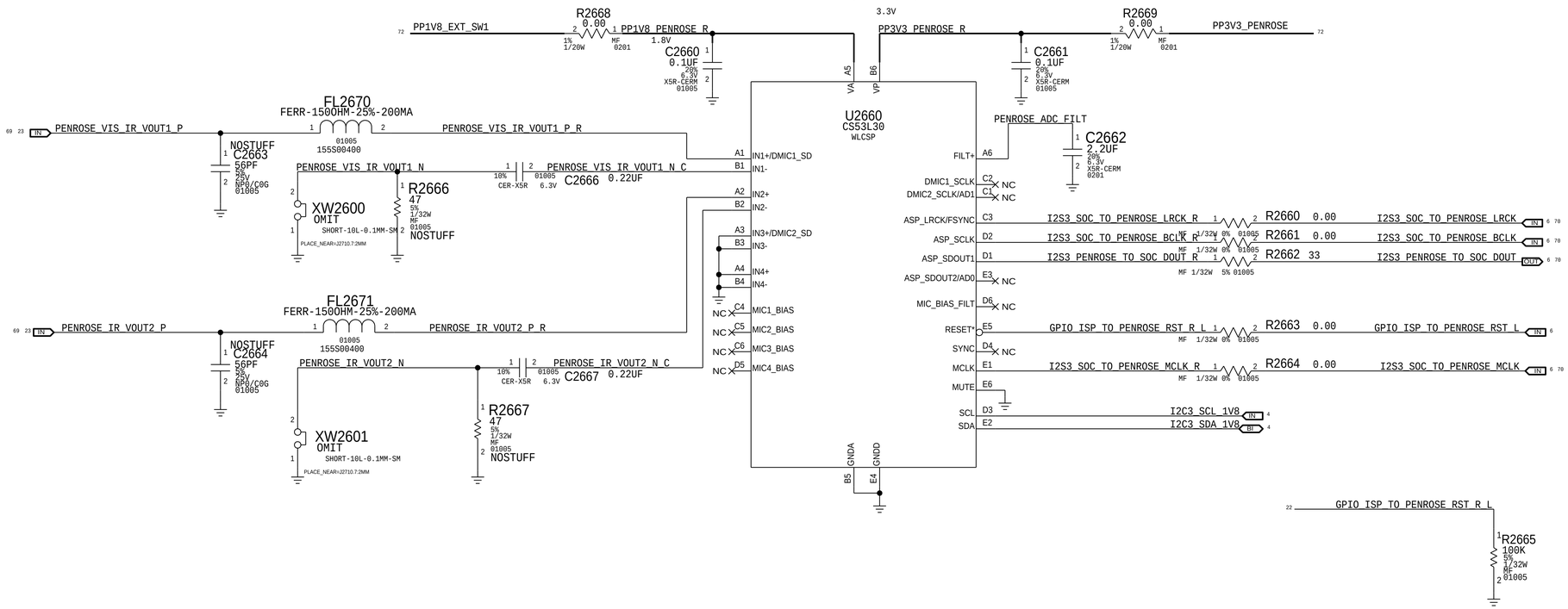

SYNC_MASTER=J418_SYNC_P2 SYNC_DATE=05/29/2018

PAGE TITLE

CAMERA: PENROSE ADC

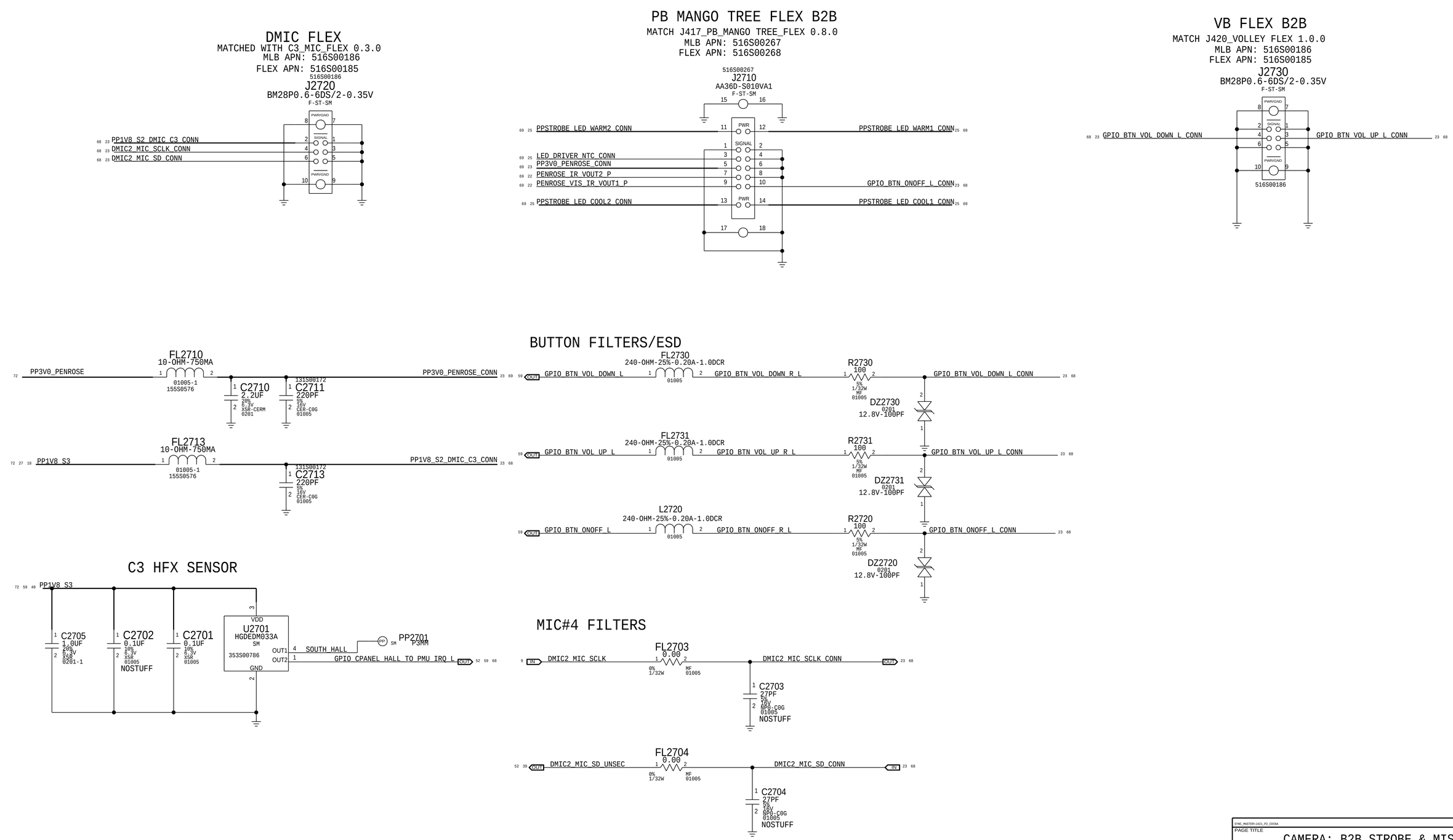

PART NUMBER	ALTERNATE FOR PART NUMBER	REFERENCE DESIGNATOR(S)	DESCRIPTION	BOM OPTION
155S00097	155S00018	FL2723,FL2725	FERR 80OHM 500MA 0.18DCR 0201	
155S0664	155S00018	FL2723,FL2725	FERR 80OHM 500MA 0.18DCR 0201	

SYNC_MASTER=J421_P2_CHIMA SYNC_DATE=05/13/2019

PAGE TITLE

CAMERA: B2B STROBE & MISC

FRONT CAMERA (LI)

POWER FILTERS

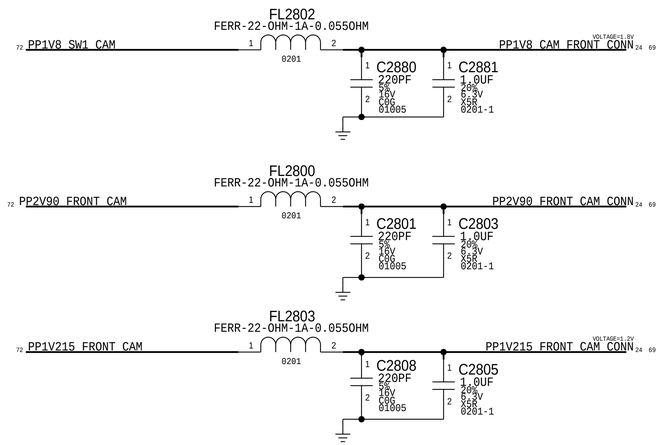

IO FILTERS

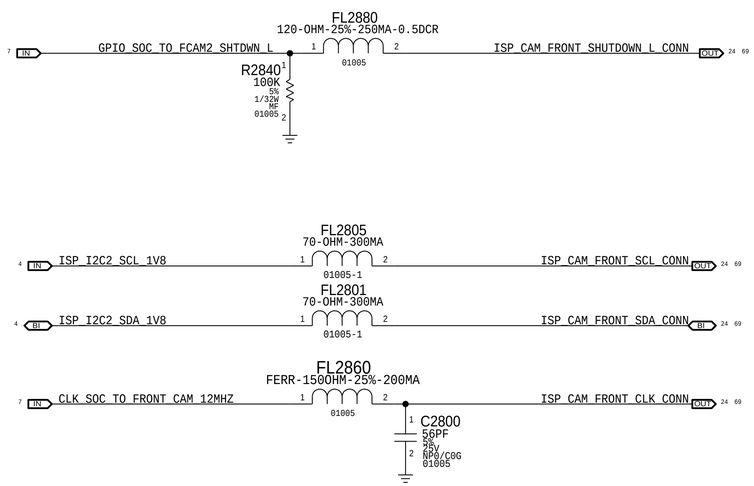

FRONT CAMERA CONNECTOR

FLEX SIDE: 516S00396
MLB SIDE: 516S00395
MATCH J317_FRONT_CAM_ISLAND_FLEX A.0.0

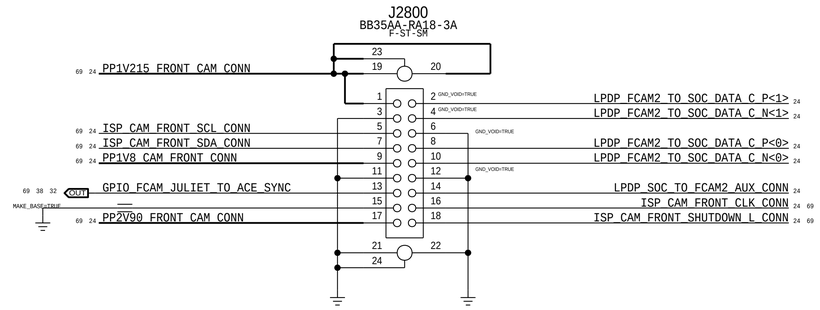

LPDP AC COUPLING CAPS

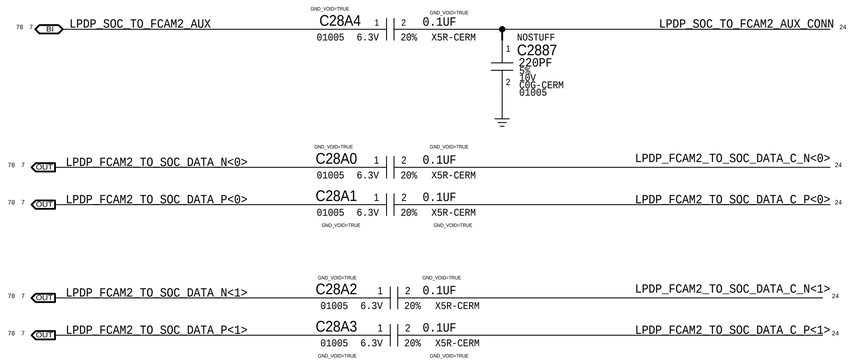

SYNC_MASTER=J421_P2_CHINA SYNC_DATE=05/13/2010

PAGE TITLE

CAMERA: B2B FRONT

PART NUMBER	ALTERNATE FOR PART NUMBER	BOM OPTION	REF DES	COMMENTS:
138S0875	138S0678		C2902, ETC	RDAR://PROBLEM/26929420
152S00121	152S00081		L2900, ETC	0.47UH 3.8A 2012 TAIYO

STROBE CIRCUITRY

LED DRIVER 1

APN: 353S00558

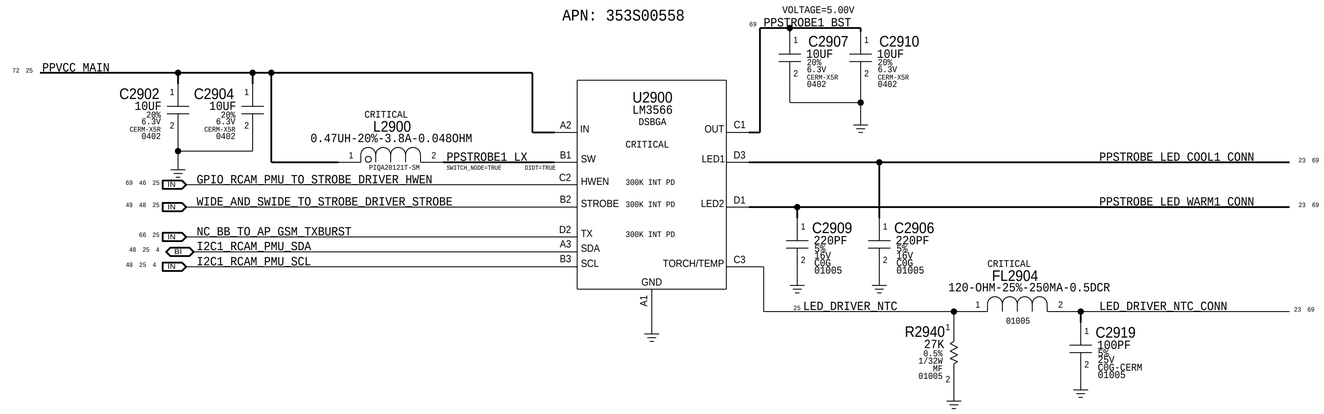

LED DRIVER 2

APN: 353S00868

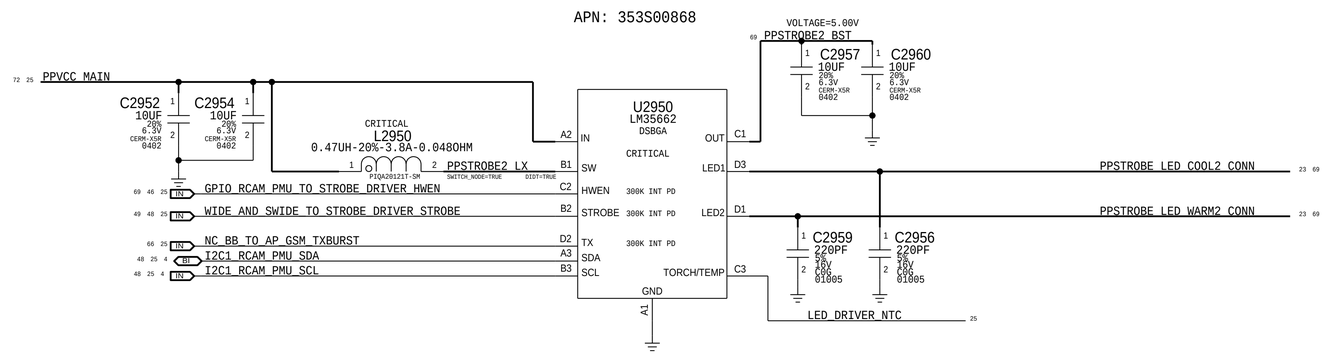

SYNC_MASTER=J317_MLB_B SYNC_DATE=11/16/2018

PAGE TITLE

CAMERA: STROBE

BORRIS BOOST

BOOST MASTER

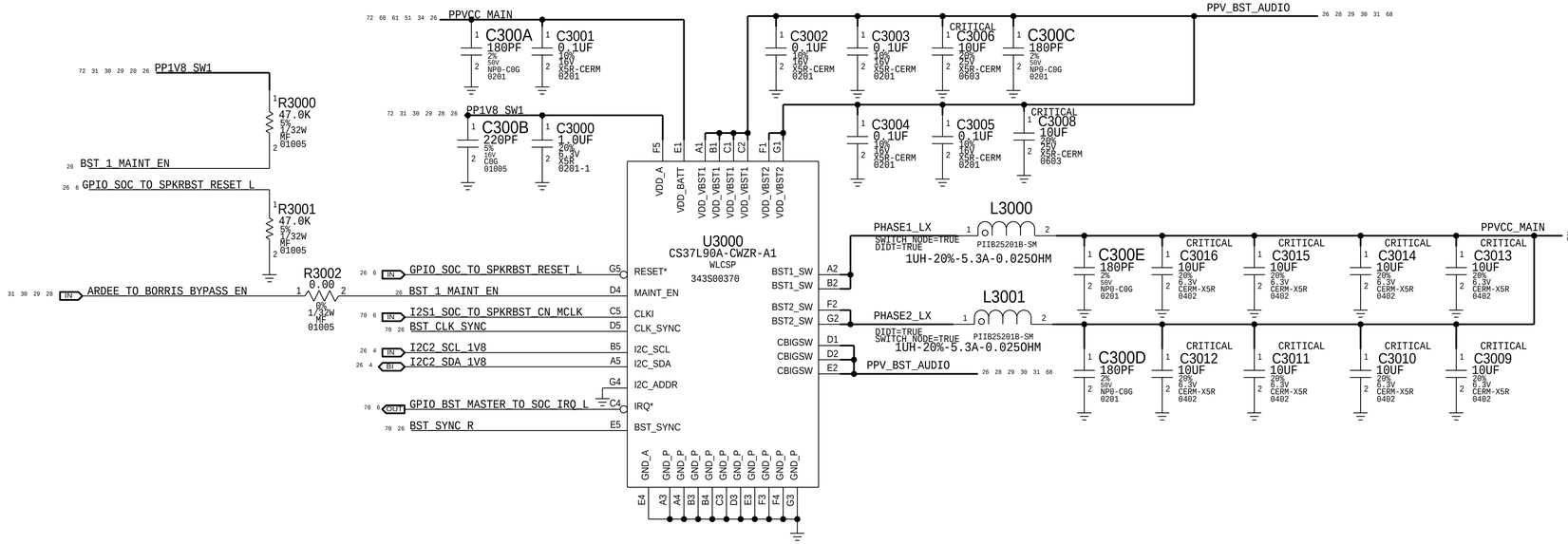

BOOST SLAVE

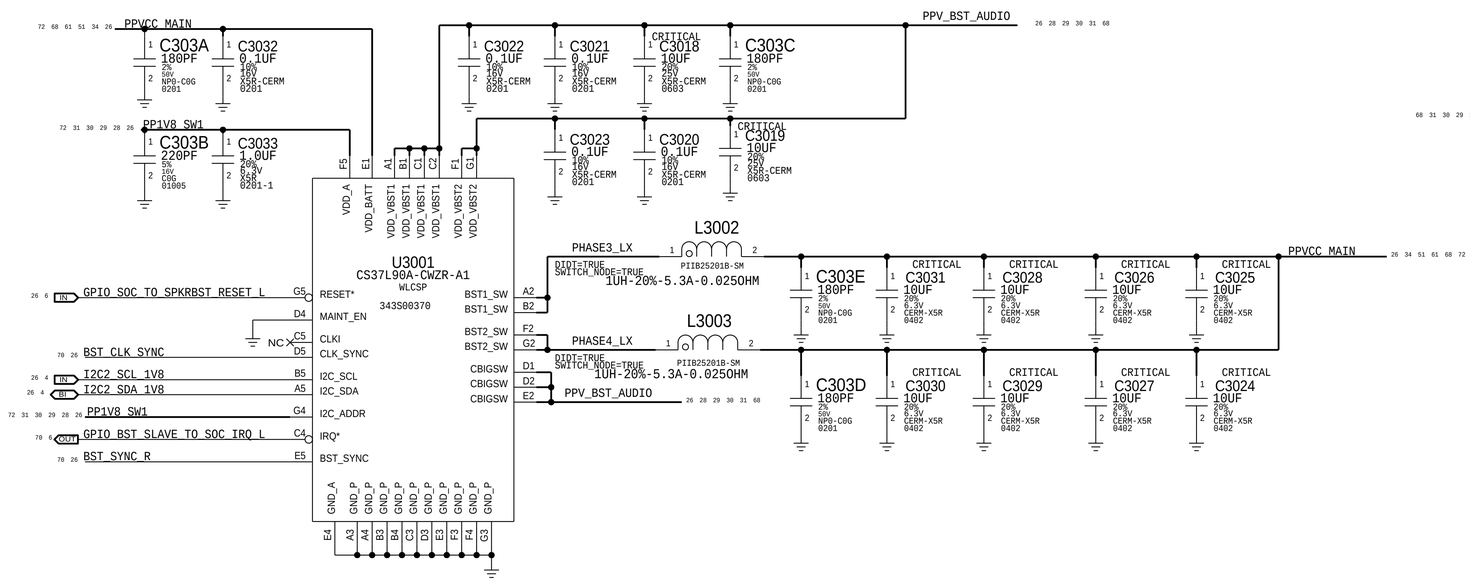

CS35L91 (ARDEE)			
ADDR PIN PULL	RESISTOR	I2C ADDRESS	
GND	0K	0X70	AMP1 FHRT
VDD	0K	0X72	AMP2 FHRW
GND	4.99K	0X74	AMP3 FHLT
VDD	4.99K	0X76	AMP4 FHLW
GND	20K	0X78	AMP5 CNRT
VDD	20K	0X7A	AMP6 CNRW
GND	100K	0X7C	AMP7 CNLT
VDD	100K	0X7E	AMP8 CNLW

CS37L90 (BORRIS)			
ADDR PIN PULL	RESISTOR	I2C ADDRESS	
GND	0K	0X60	MASTER
DVDD	0K	0X62	SLAVE

CAP RESERVOIR

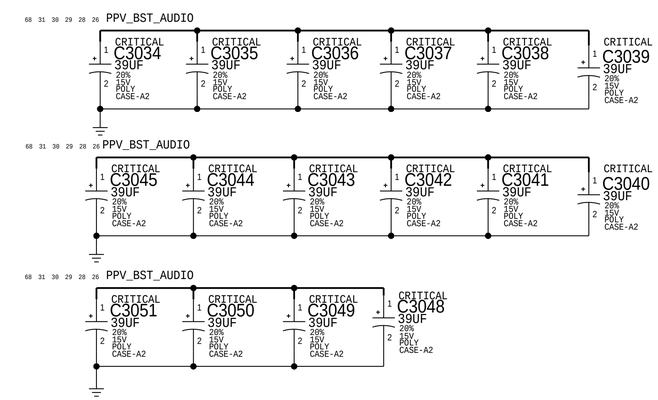

SYNC_MASTER=J420_MLB SYNC_DATE=01/16/2019

PAGE TITLE

AUDIO: BORRIS BOOST

DMIC CONN AND FILTERS

MIC FLEX B2B

MATCH J317_MIC_FLEX 5.2.0
MLB APN: 516S00186
FLEX APN: 516S00185

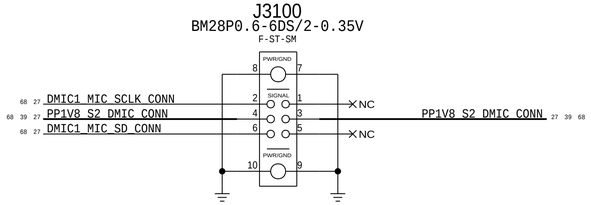

ROUTING	BUS	SELECT	LOCATION	DATA ASSERTS ON	DATA LATCHED ON
MIC#1	PDM0	HIGH	LEFT	CLK RISING EDGE	CLK FALLING EDGE
MIC#2	PDM0	LOW	RIGHT	CLK FALLING EDGE	CLK RISING EDGE
MIC#3	PDM1	HIGH	FRONT(ON TM)	CLK RISING EDGE	CLK FALLING EDGE
MIC#4	PDM1	LOW	REAR(C3)	CLK FALLING EDGE	CLK RISING EDGE
MIC#5	PDM2	HIGH	LANDSCAPE	CLK RISING EDGE	CLK FALLING EDGE

DMIC2 FILTERS

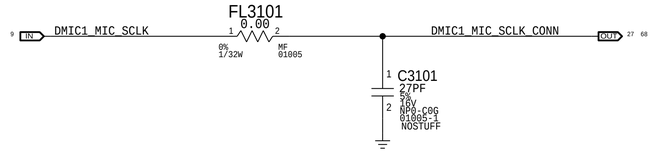

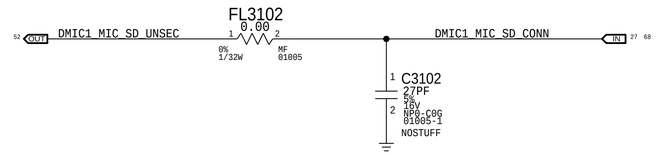

SYNC_MASTER=J421_P2_CHINA SYNC_DATE=05/13/2019

PAGE TITLE

AUDIO: DMIC B2B & FILTERS

CN L TWEETER SPEAKER AMP

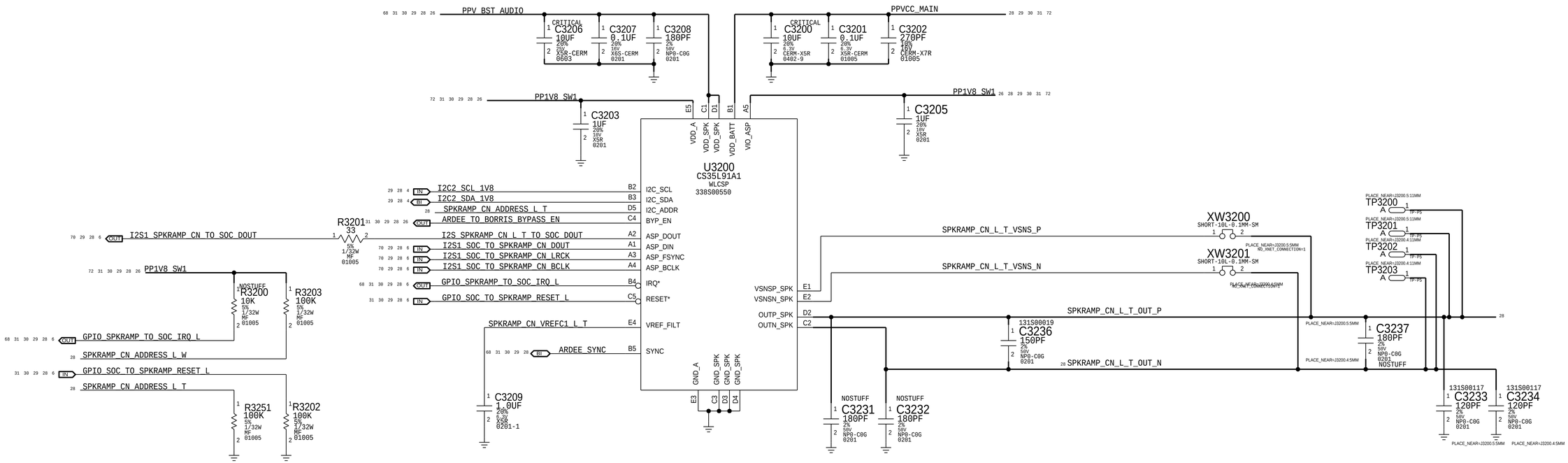

CN L WOOFER SPEAKER AMP

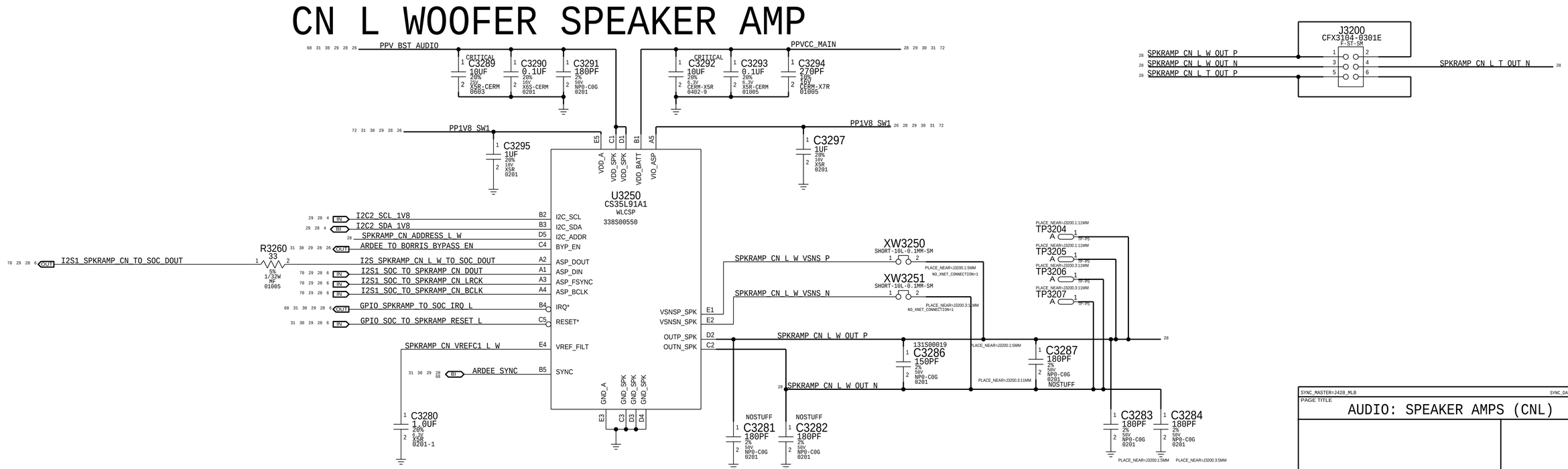

SYNC_MASTER=J420_MLB SYNC_DATE=01/16/2019

PAGE TITLE

AUDIO: SPEAKER AMPS (CNL)

CN R TWEETER SPEAKER AMP

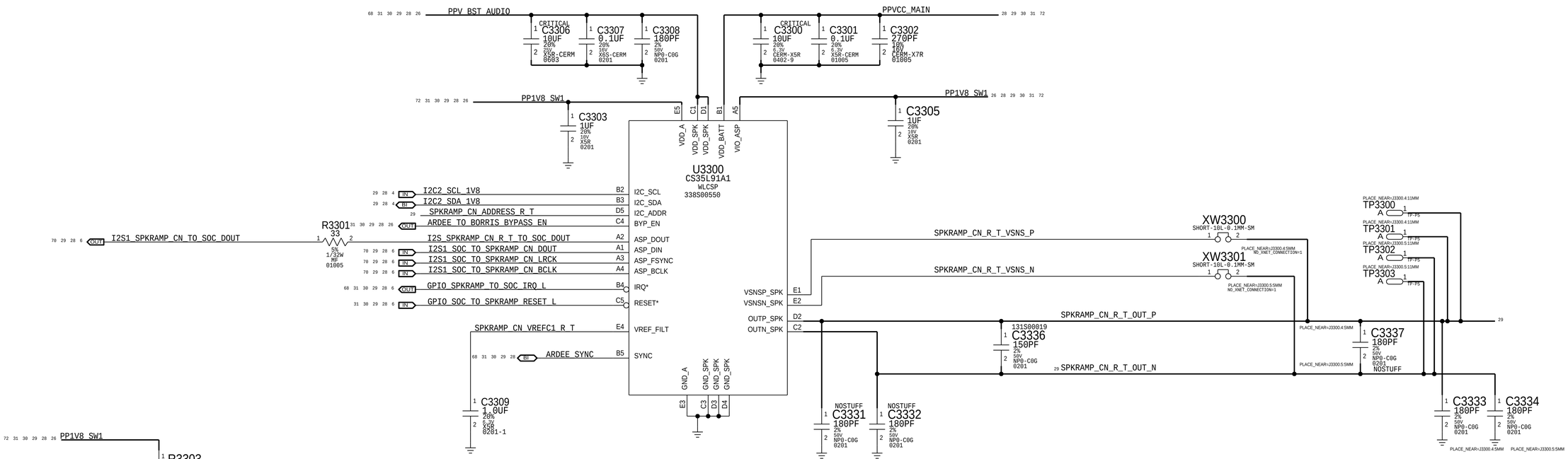

CN R WOOFER SPEAKER AMP

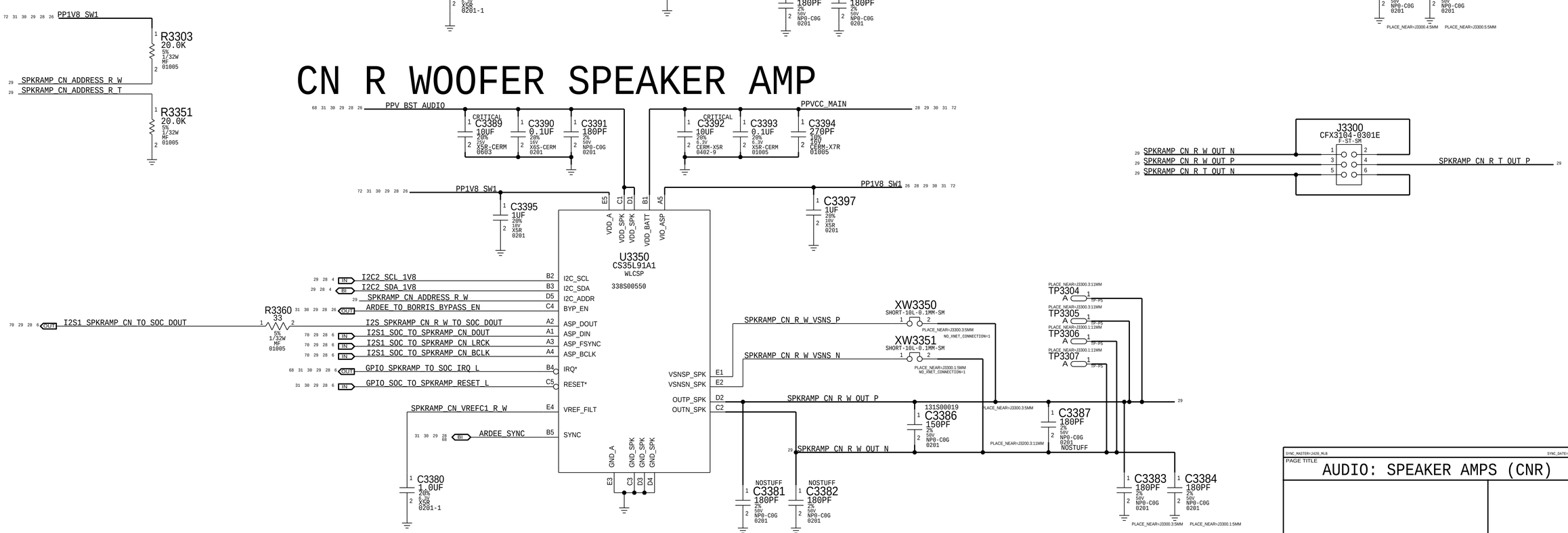

SYNC_MASTER=J420_MLB SYNC_DATE=01/16/2019

PAGE TITLE

AUDIO: SPEAKER AMPS (CNR)

FH L TWEETER SPEAKER AMP

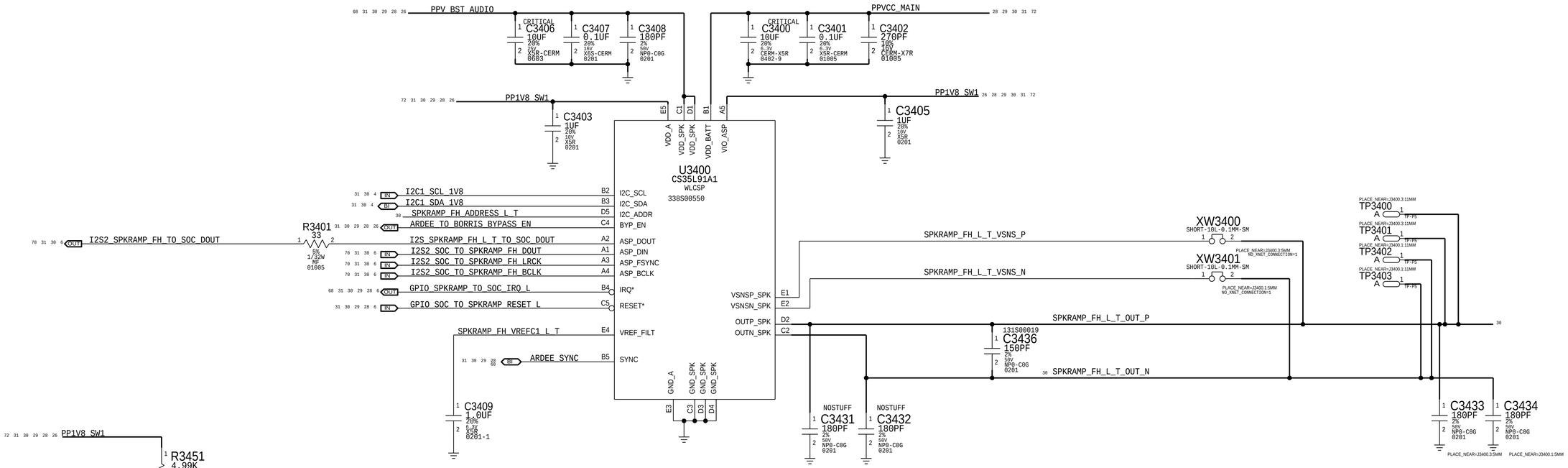

FH L WOOFER SPEAKER AMP

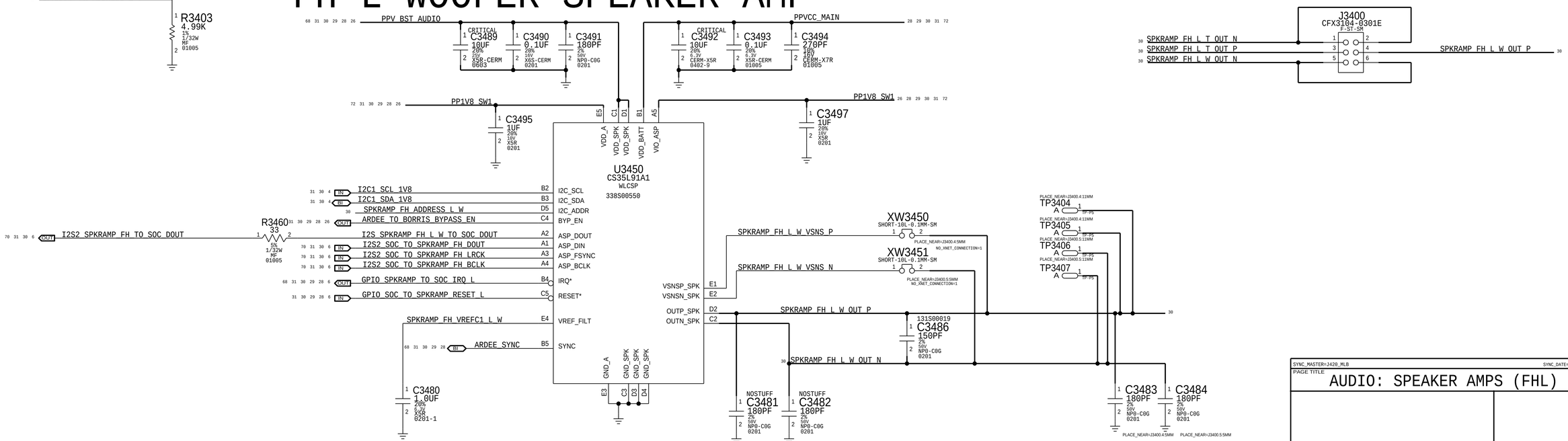

SYNC_MASTER=J420_MLB SYNC_DATE=01/16/2019

PAGE TITLE

AUDIO: SPEAKER AMPS (FHL)

FH R TWEETER SPEAKER AMP

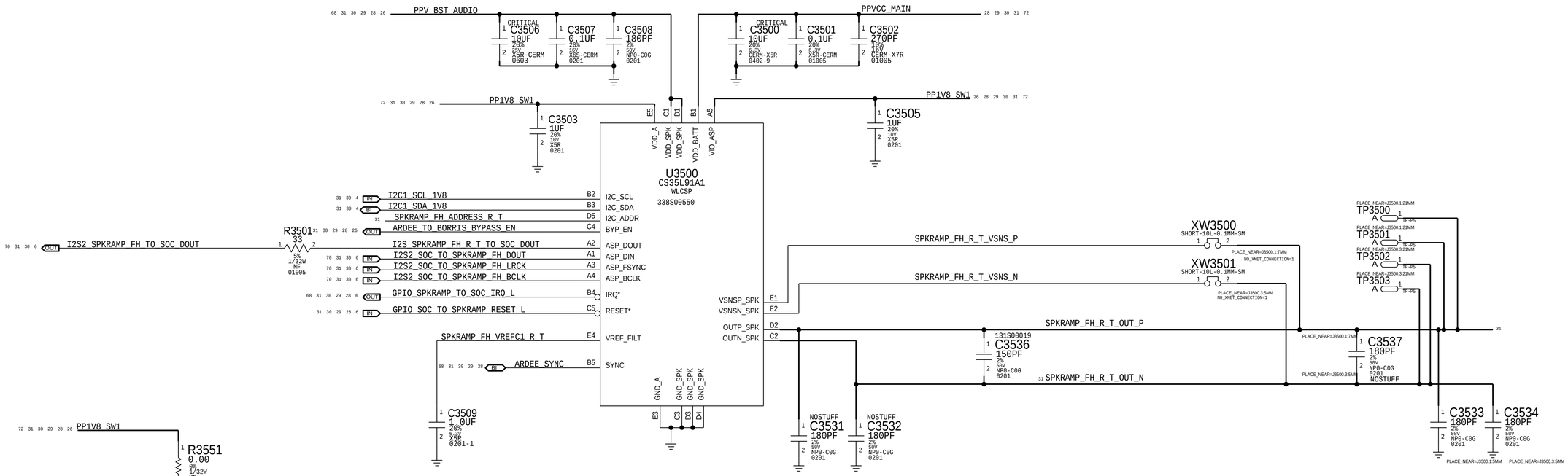

FH R WOOFER SPEAKER AMP

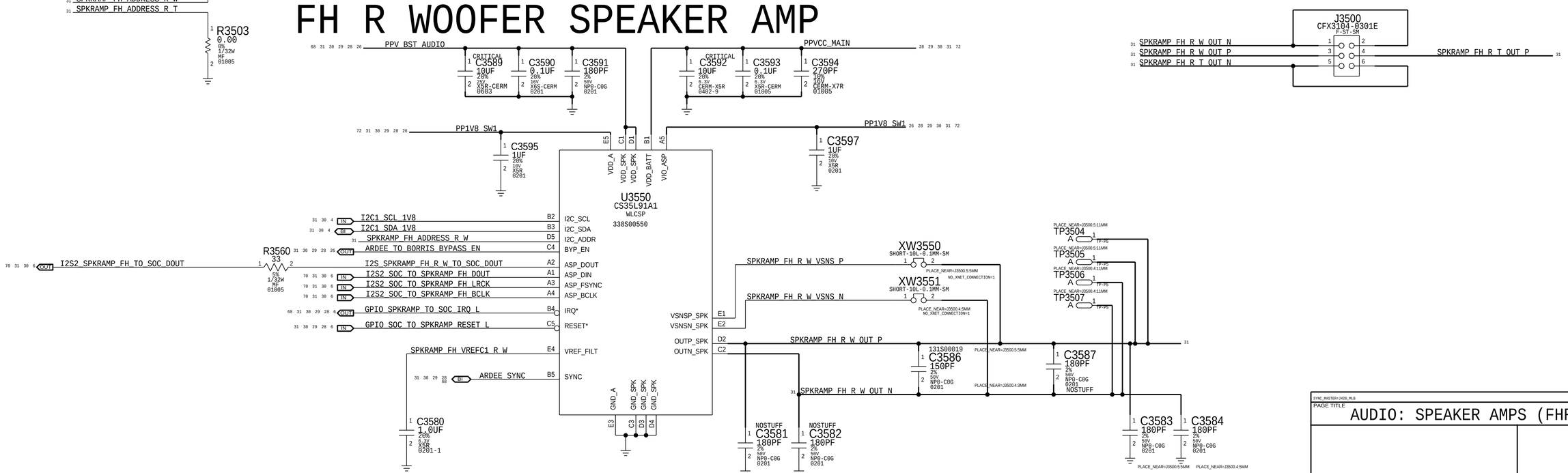

SYNC_MASTER=J420_MLB SYNC_DATE=01/16/2019

PAGE TITLE

AUDIO: SPEAKER AMPS (FHR)

ACE BOOST

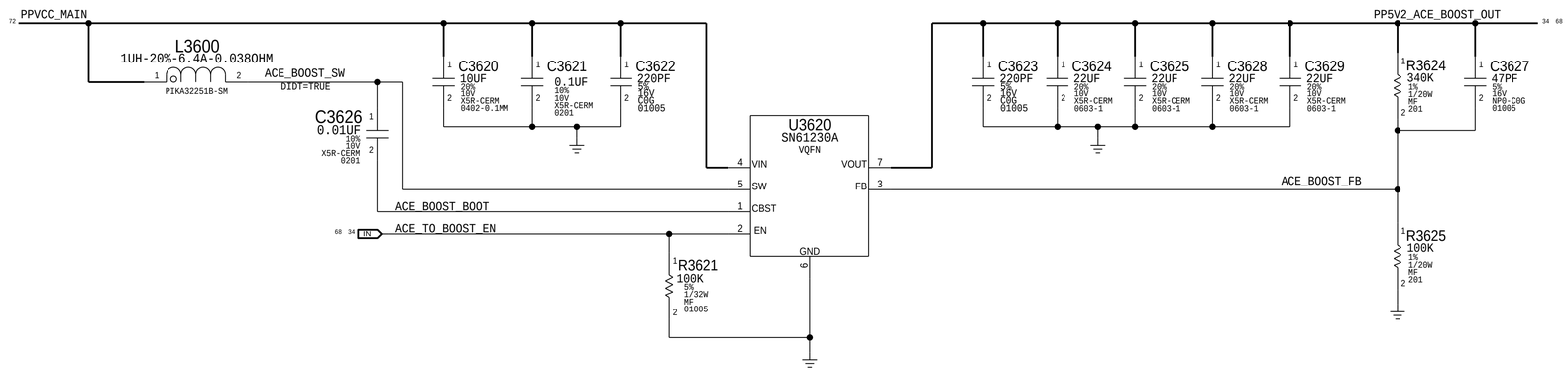

VBUS DETECT

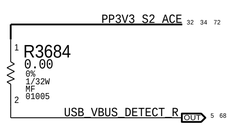

EXT CAM SYNC

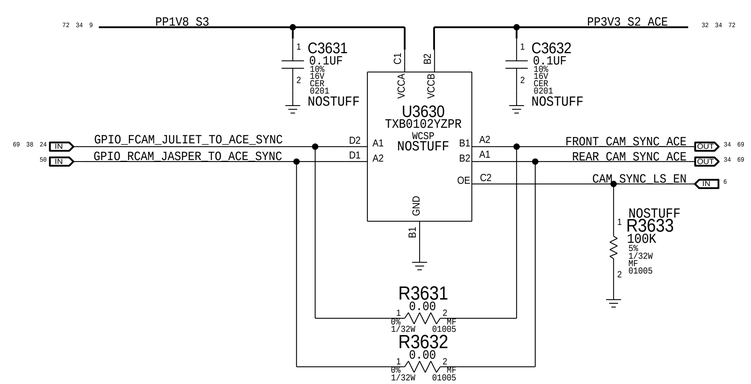

SYNC_MASTER=J421_P2_CHINA SYNC_DATE=05/13/2019

PAGE TITLE

IO: ACE PERIPHERALS

PART NUMBER	ALTERNATE FOR PART NUMBER	BOM OPTION	REF DES	COMMENTS:
372S0194	372S0187		Q3790,Q8990	XSTR,N-CHN,34V,500MA

B2B CONNECTOR TO I/0 FLEX

MATCH J317_IO_FLEX A.0.0

MLB 516S00266
FLEX 516S00265

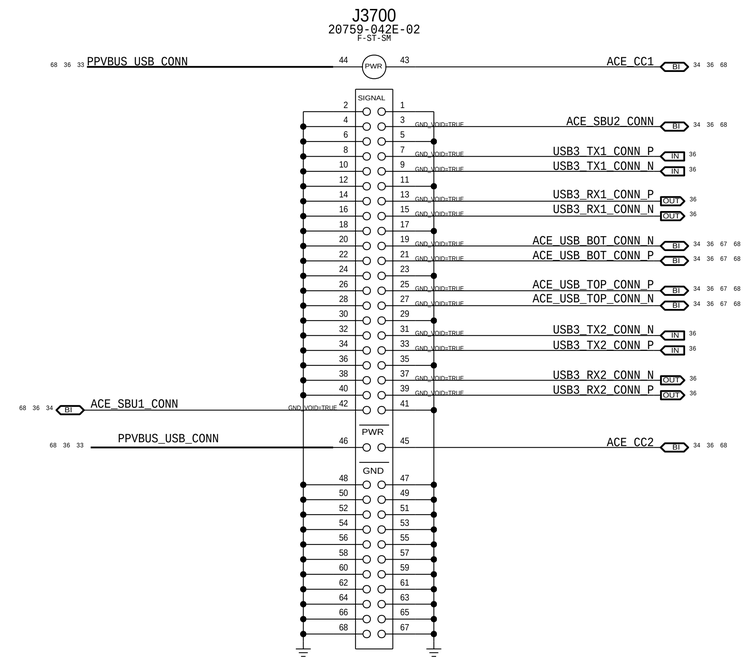

TRANSIENT SUPPRESSION

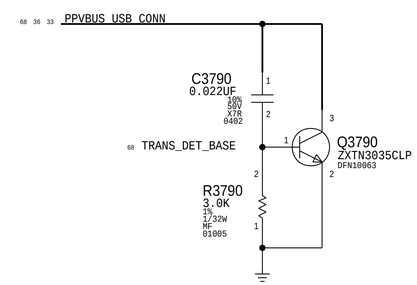

SYNC_MASTER=J421_P2_CHINA SYNC_DATE=05/13/2019

PAGE TITLE

IO: IOFLEX B2B & SIM B2B

PART NUMBER	ALTERNATE FOR PART NUMBER	BOM OPTION	REF DES	COMMENTS:
353S02158	353S01960		U3800	USBC ACE2

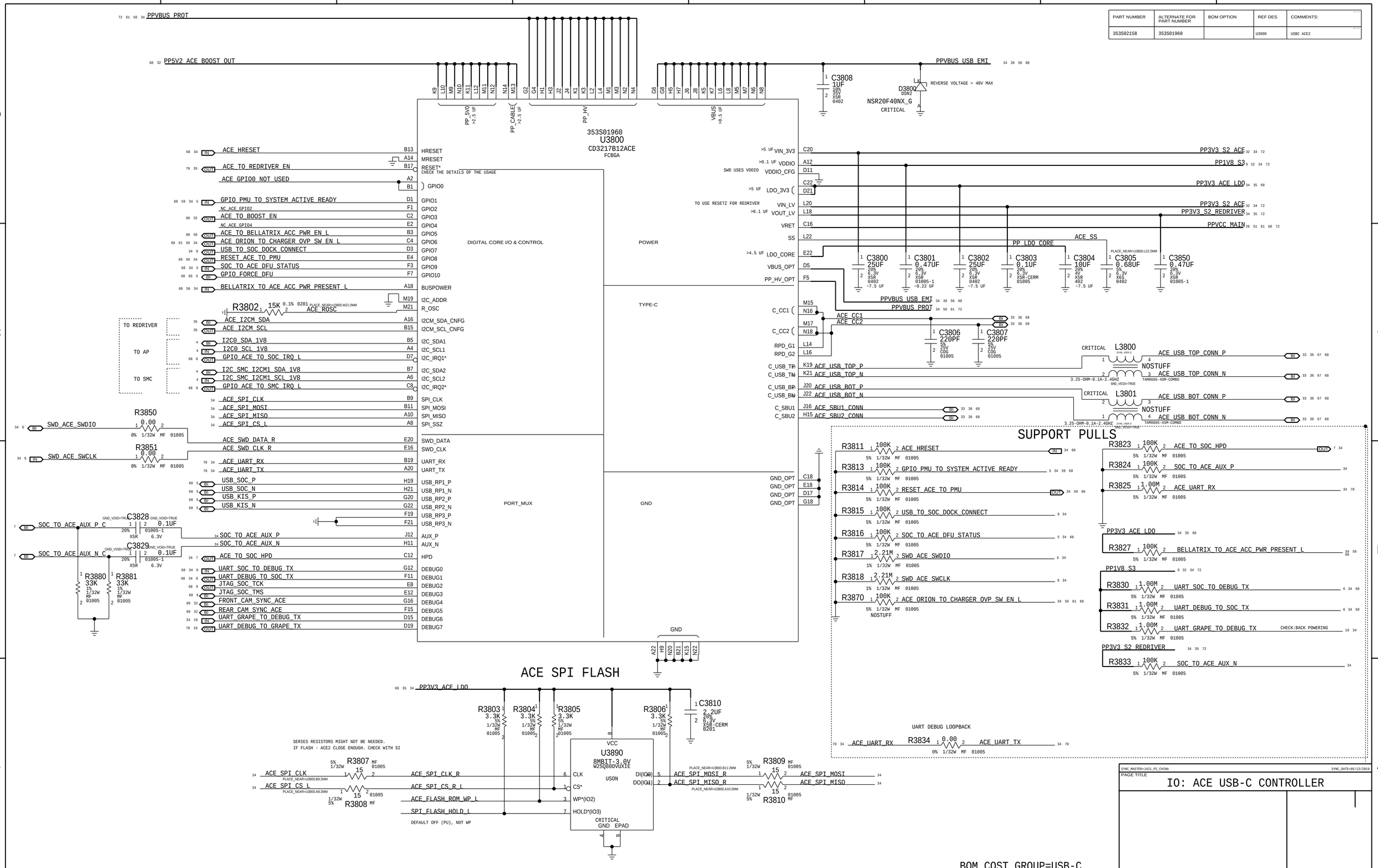

USB RE-DRIVER

APN: 353S02059
7-BIT I2C ADD: 0X50

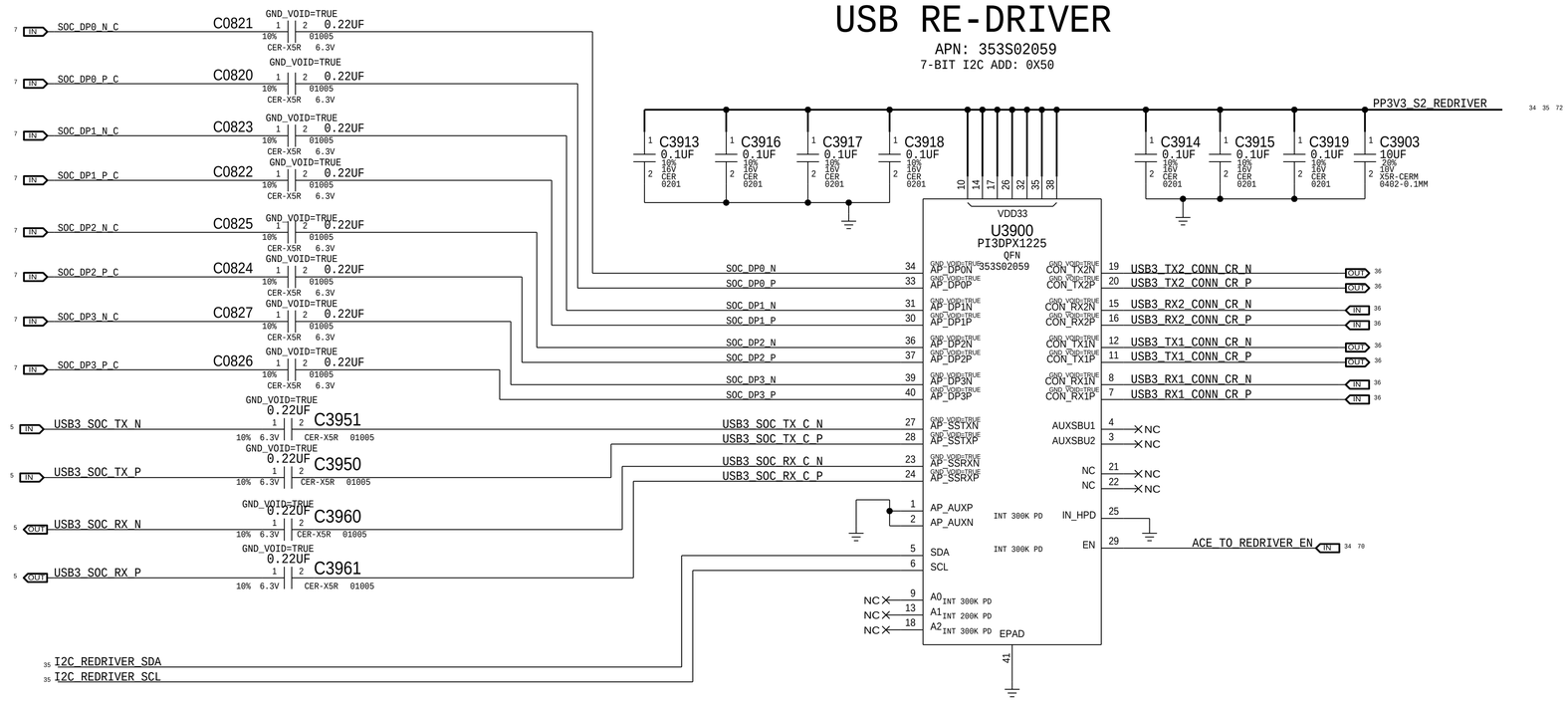

I2C ISOLATION CIRCUIT

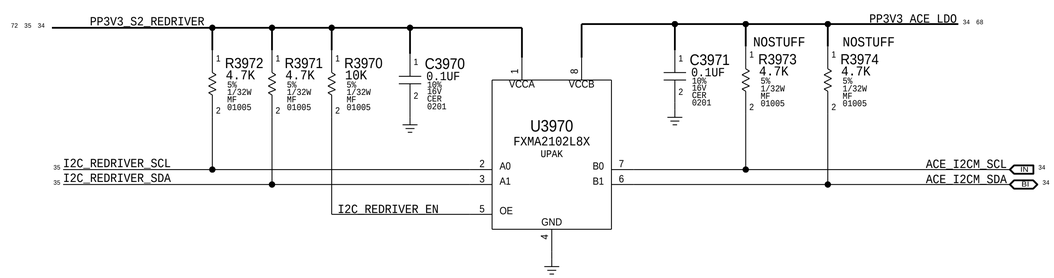

PAGE TITLE

IO: ACE REDRIVER

USB CONN FILTERS

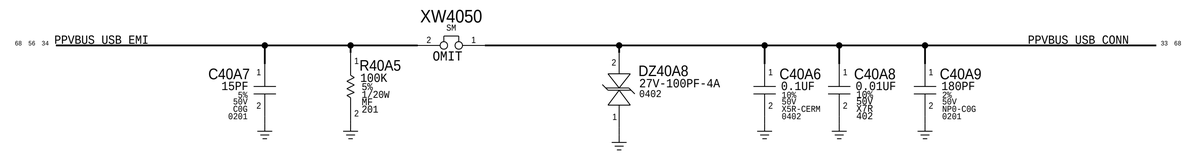

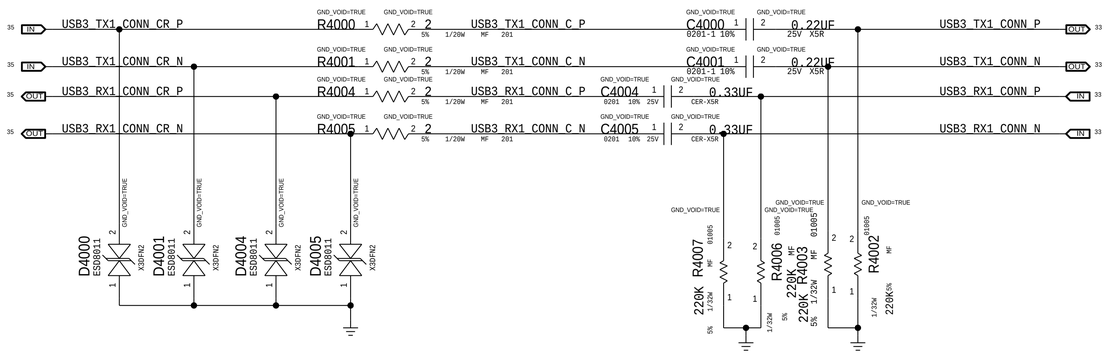

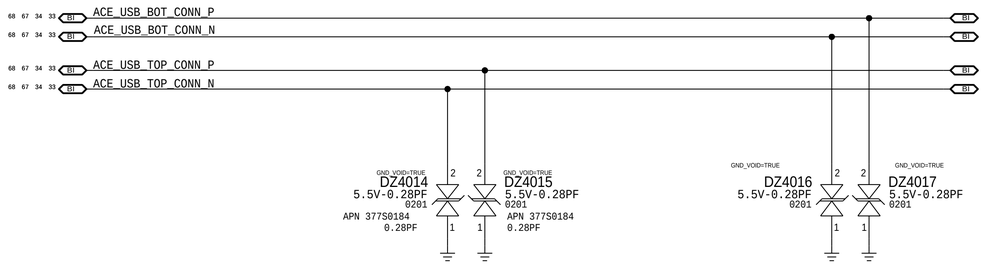

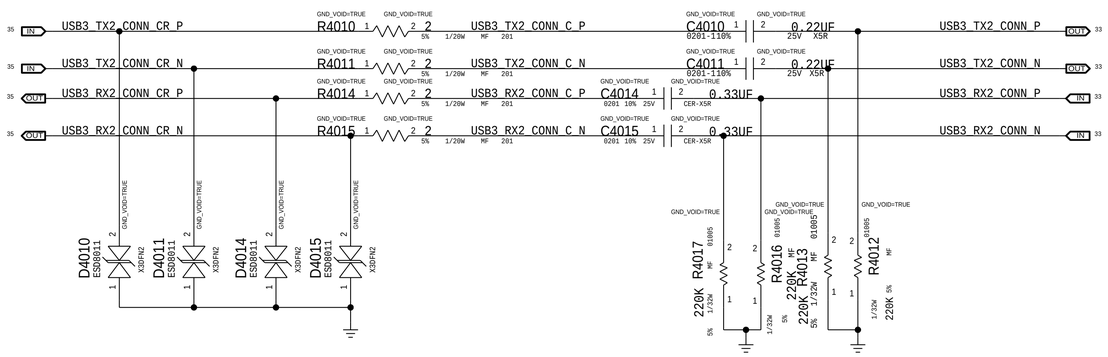

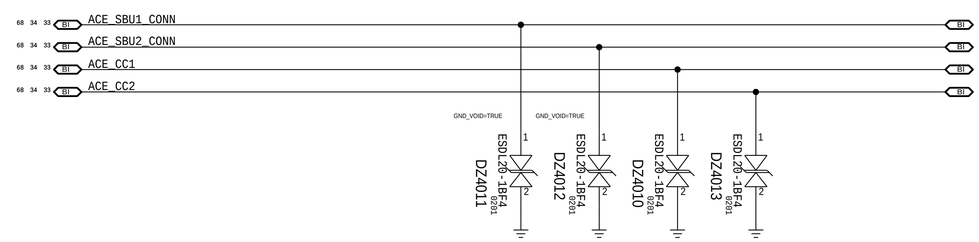

SYNC_MASTER=J317_MLB_B SYNC_DATE=11/16/2018

PAGE TITLE

IO: ACE FILTERS

Rigel Driver

PART NUMBER	ALTERNATE FOR PART NUMBER	BOM OPTION	REF DES	COMMENTS:
152S00965	152S00640		L4100, ETC	0.47UH 4A 2012 TAIYO

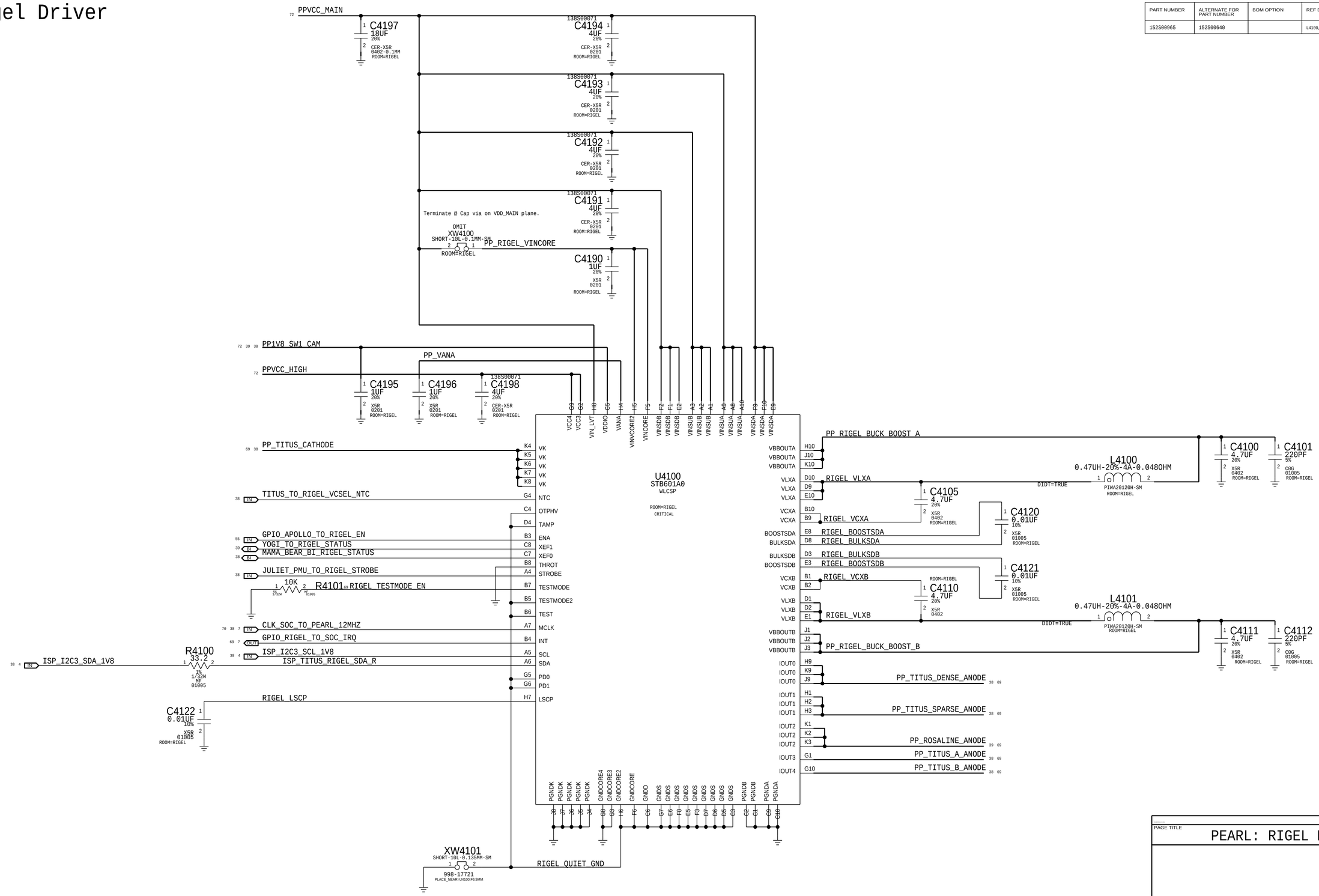

PAGE TITLE

PEARL: RIGEL DRIVER

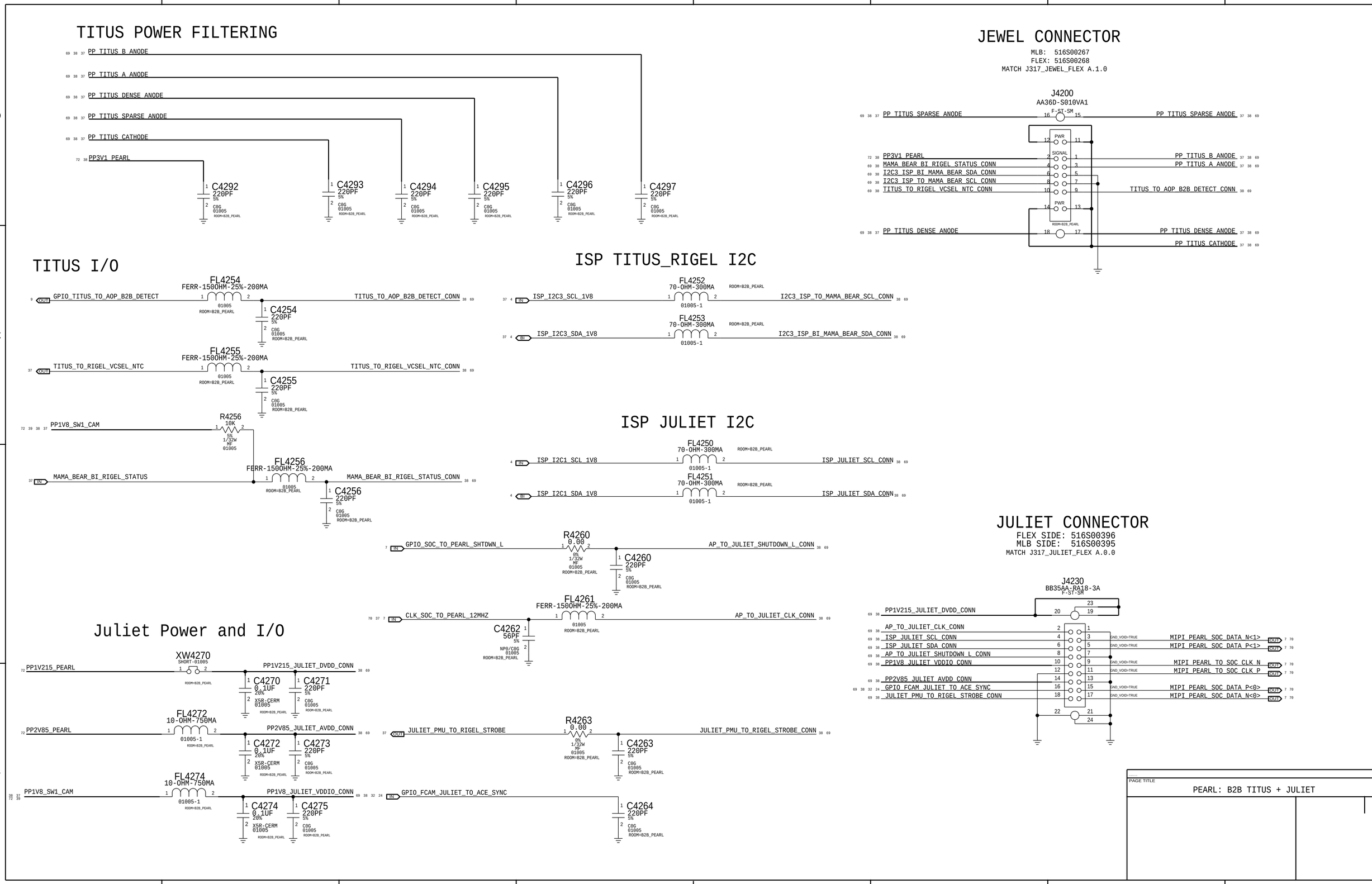
TITUS POWER FILTERING
PP TITUS B ANODE
PP TITUS A ANODE
PP TITUS DENSE ANODE
PP TITUS SPARSE ANODE
PP TITUS CATHODE
PP3V1 PEARL
C4292 220PF 5% C0G 01005 ROOM=B2B_PEARL
C4293 220PF 5% C0G 01005 ROOM=B2B_PEARL
C4294 220PF 5% C0G 01005 ROOM=B2B_PEARL
C4295 220PF 5% C0G 01005 ROOM=B2B_PEARL
C4296 220PF 5% C0G 01005 ROOM=B2B_PEARL
C4297 220PF 5% C0G 01005 ROOM=B2B_PEARL
JEWEL CONNECTOR
MLB: 516S00267
FLEX: 516S00268
MATCH J317_JEWEL_FLEX A.1.0
J4200
AA36D-S010VA1
F-ST-SM
PWR
SIGNAL
PP TITUS SPARSE ANODE
PP3V1 PEARL
MAMA BEAR BI RIGEL STATUS CONN
I2C3 ISP BI MAMA BEAR SDA CONN
I2C3 ISP TO MAMA BEAR SCL CONN
TITUS TO RIGEL VCSEL NTC CONN
PP TITUS B ANODE
PP TITUS A ANODE
TITUS TO AOP B2B DETECT CONN
PP TITUS DENSE ANODE
PP TITUS CATHODE
TITUS I/O
FL4254 FERR-150OHM-25%-200MA 01005 ROOM=B2B_PEARL
GPIO_TITUS_TO_AOP_B2B_DETECT
TITUS_TO_AOP_B2B_DETECT_CONN
C4254 220PF 5% C0G 01005 ROOM=B2B_PEARL
FL4255 FERR-150OHM-25%-200MA 01005 ROOM=B2B_PEARL
TITUS_TO_RIGEL_VCSEL_NTC
TITUS_TO_RIGEL_VCSEL_NTC_CONN
C4255 220PF 5% C0G 01005 ROOM=B2B_PEARL
R4256 10K 5% 1/32W MF 01005
PP1V8_SW1_CAM
FL4256 FERR-150OHM-25%-200MA 01005 ROOM=B2B_PEARL
MAMA_BEAR_BI_RIGEL_STATUS
MAMA_BEAR_BI_RIGEL_STATUS_CONN
C4256 220PF 5% C0G 01005 ROOM=B2B_PEARL
ISP TITUS_RIGEL I2C
FL4252 70-OHM-300MA 01005-1 ROOM=B2B_PEARL
ISP_I2C3_SCL_1V8
I2C3_ISP_TO_MAMA_BEAR_SCL_CONN
FL4253 70-OHM-300MA 01005-1 ROOM=B2B_PEARL
ISP_I2C3_SDA_1V8
I2C3_ISP_BI_MAMA_BEAR_SDA_CONN
ISP JULIET I2C
FL4250 70-OHM-300MA 01005-1 ROOM=B2B_PEARL
ISP_I2C1_SCL_1V8
ISP_JULIET_SCL_CONN
FL4251 70-OHM-300MA 01005-1 ROOM=B2B_PEARL
ISP_I2C1_SDA_1V8
ISP_JULIET_SDA_CONN
R4260 0.00 0% 1/32W MF 01005 ROOM=B2B_PEARL
GPIO_SOC_TO_PEARL_SHTDWN_L
AP_TO_JULIET_SHUTDOWN_L_CONN
C4260 220PF 5% C0G 01005 ROOM=B2B_PEARL
FL4261 FERR-150OHM-25%-200MA 01005 ROOM=B2B_PEARL
CLK_SOC_TO_PEARL_12MHZ
AP_TO_JULIET_CLK_CONN
C4262 56PF 5% NP0/C0G 01005 ROOM=B2B_PEARL
JULIET CONNECTOR
FLEX SIDE: 516S00396
MLB SIDE: 516S00395
MATCH J317_JULIET_FLEX A.0.0
J4230
BB35AA-RA18-3A
F-ST-SM
PP1V215_JULIET_DVDD_CONN
AP_TO_JULIET_CLK_CONN
ISP_JULIET_SCL_CONN
ISP_JULIET_SDA_CONN
AP_TO_JULIET_SHUTDOWN_L_CONN
PP1V8_JULIET_VDDIO_CONN
PP2V85_JULIET_AVDD_CONN
GPIO_FCAM_JULIET_TO_ACE_SYNC
JULIET_PMU_TO_RIGEL_STROBE_CONN
GND_VOID=TRUE
MIPI_PEARL_SOC_DATA_N<1>
MIPI_PEARL_SOC_DATA_P<1>
MIPI_PEARL_TO_SOC_CLK_N
MIPI_PEARL_TO_SOC_CLK_P
MIPI_PEARL_SOC_DATA_P<0>
MIPI_PEARL_SOC_DATA_N<0>
Juliet Power and I/O
XW4270 SHORT-01005 ROOM=B2B_PEARL
PP1V215_PEARL
PP1V215_JULIET_DVDD_CONN
C4270 0.1UF 20% X5R-CERM 01005 ROOM=B2B_PEARL
C4271 220PF 5% C0G 01005 ROOM=B2B_PEARL
FL4272 10-OHM-750MA 01005-1 ROOM=B2B_PEARL
PP2V85_PEARL
PP2V85_JULIET_AVDD_CONN
C4272 0.1UF 20% X5R-CERM 01005 ROOM=B2B_PEARL
C4273 220PF 5% C0G 01005 ROOM=B2B_PEARL
FL4274 10-OHM-750MA 01005-1 ROOM=B2B_PEARL
PP1V8_SW1_CAM
PP1V8_JULIET_VDDIO_CONN
C4274 0.1UF 20% X5R-CERM 01005 ROOM=B2B_PEARL
C4275 220PF 5% C0G 01005 ROOM=B2B_PEARL
R4263 0.00 0% 1/32W MF 01005 ROOM=B2B_PEARL
JULIET_PMU_TO_RIGEL_STROBE
JULIET_PMU_TO_RIGEL_STROBE_CONN
C4263 220PF 5% C0G 01005 ROOM=B2B_PEARL
GPIO_FCAM_JULIET_TO_ACE_SYNC
C4264 220PF 5% C0G 01005 ROOM=B2B_PEARL
PAGE TITLE
PEARL: B2B TITUS + JULIET

ISP FCAM1 JULIET ROSALINE I2C

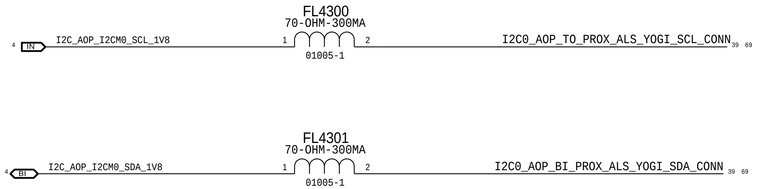

Yogi Signals

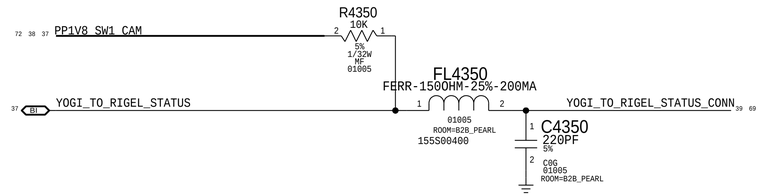

ROSALINE(AARM) CONNECTOR

MLB: 516S00150
FLEX: 516S00149
MATCH J417_AARM_FLEX A.0.0

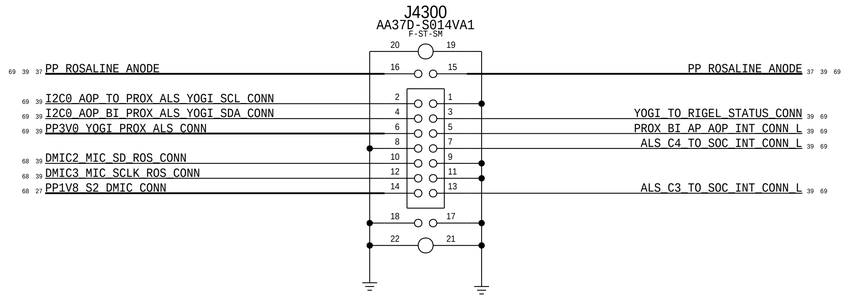

DMIC1 FILTERS ROSALINE CONN

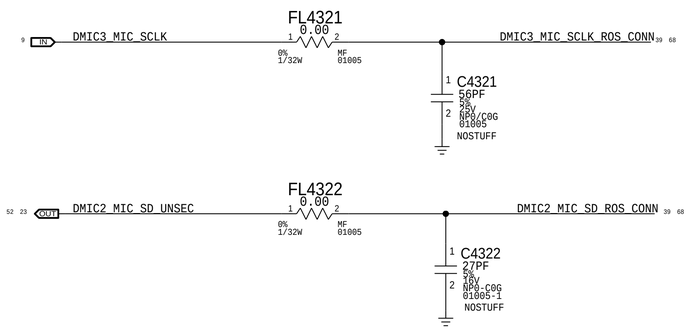

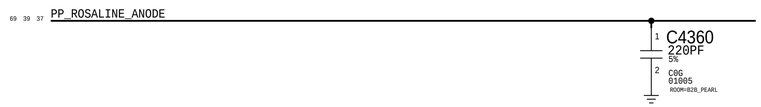

PROX & ALS POWER

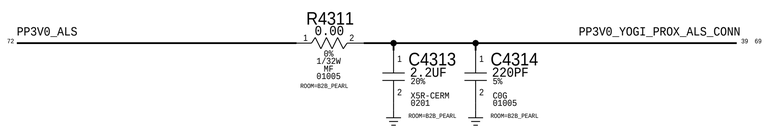

PROX/ALS I/O

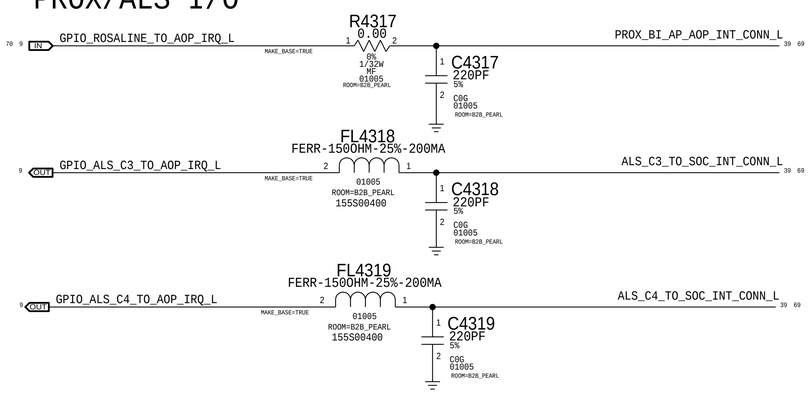

PAGE TITLE
PEARL: B2B ROSALINE + MISC

EDP FLEX FILTERS AND CONNECTORS

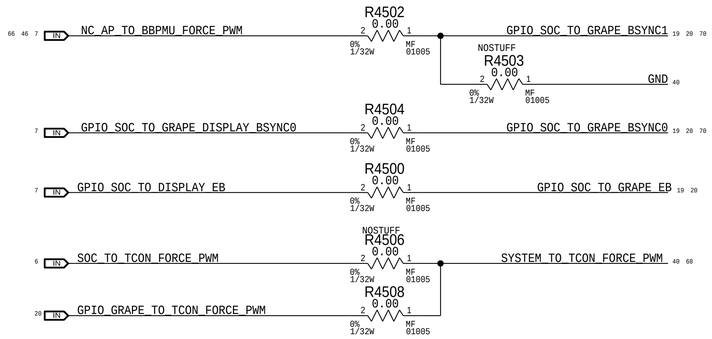

TCON I2C FILTERS

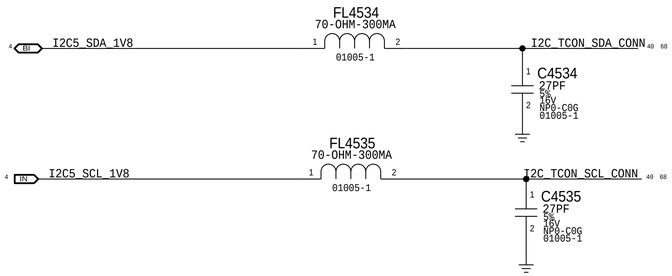

HALL PWR FILTER

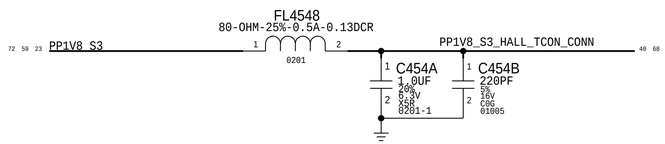

BL CONN MLB SIDE 18+2 PIN B2B

FLEX APN: 516S00363
MLB APN: 516S00362
MATCHES J317_BACKLIGHT_FLEX 3.2.0

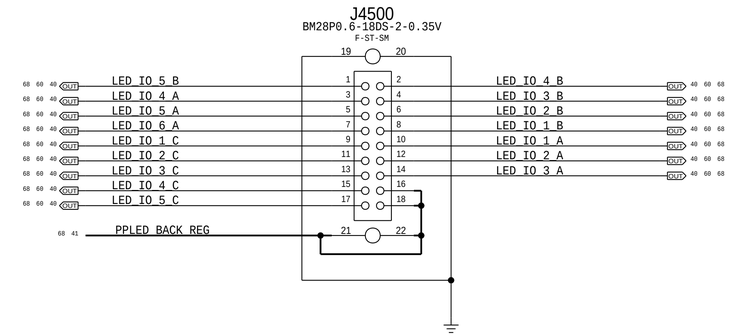

EDP CONN MLB SIDE 46+2 PIN B2B

FLEX APN: 516S00365
MLB APN: 516S00364
MATCHES J317_EDP_FLEX 2.2.0

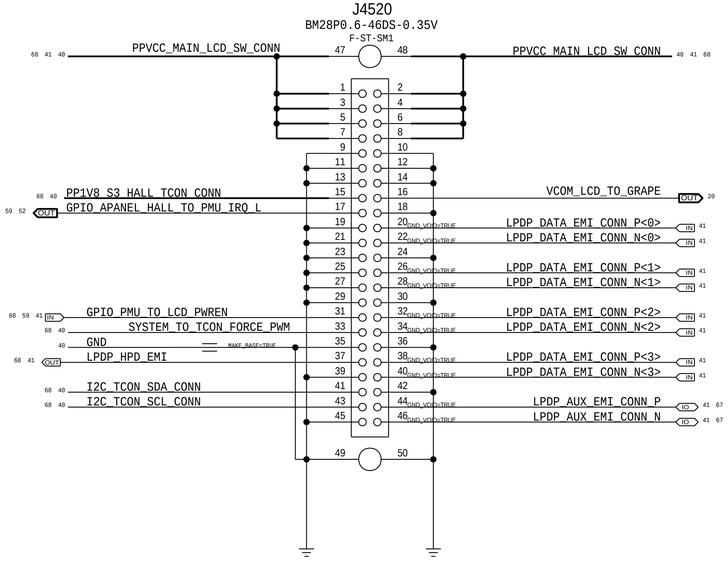

LED DRIVER FILTERS

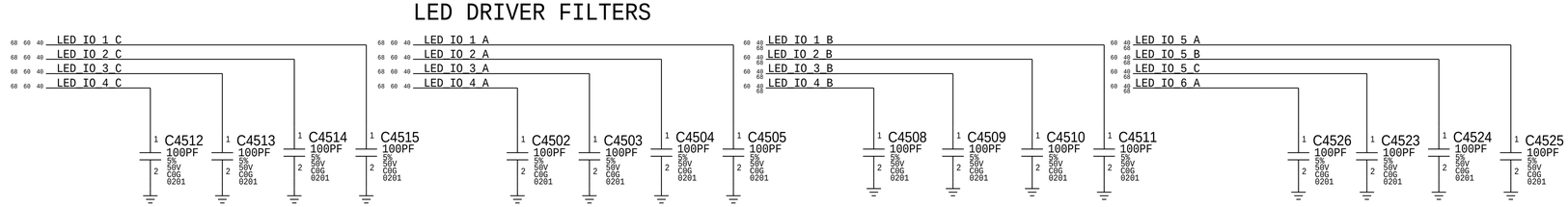

SYNC_MASTER=J317_MLB_B SYNC_DATE=11/16/2018

PAGE TITLE

DISPLAY: B2B CONN

EDP CONNECTOR SUPPORT

PART#	QTY	DESCRIPTION	REFERENCE DESIGNATOR(S)	CRITICAL	BOM OPTION
155S0897	4	CMC,DISPLAY DESENSE	L4602,L4612,L4622,L4632	CRITICAL	

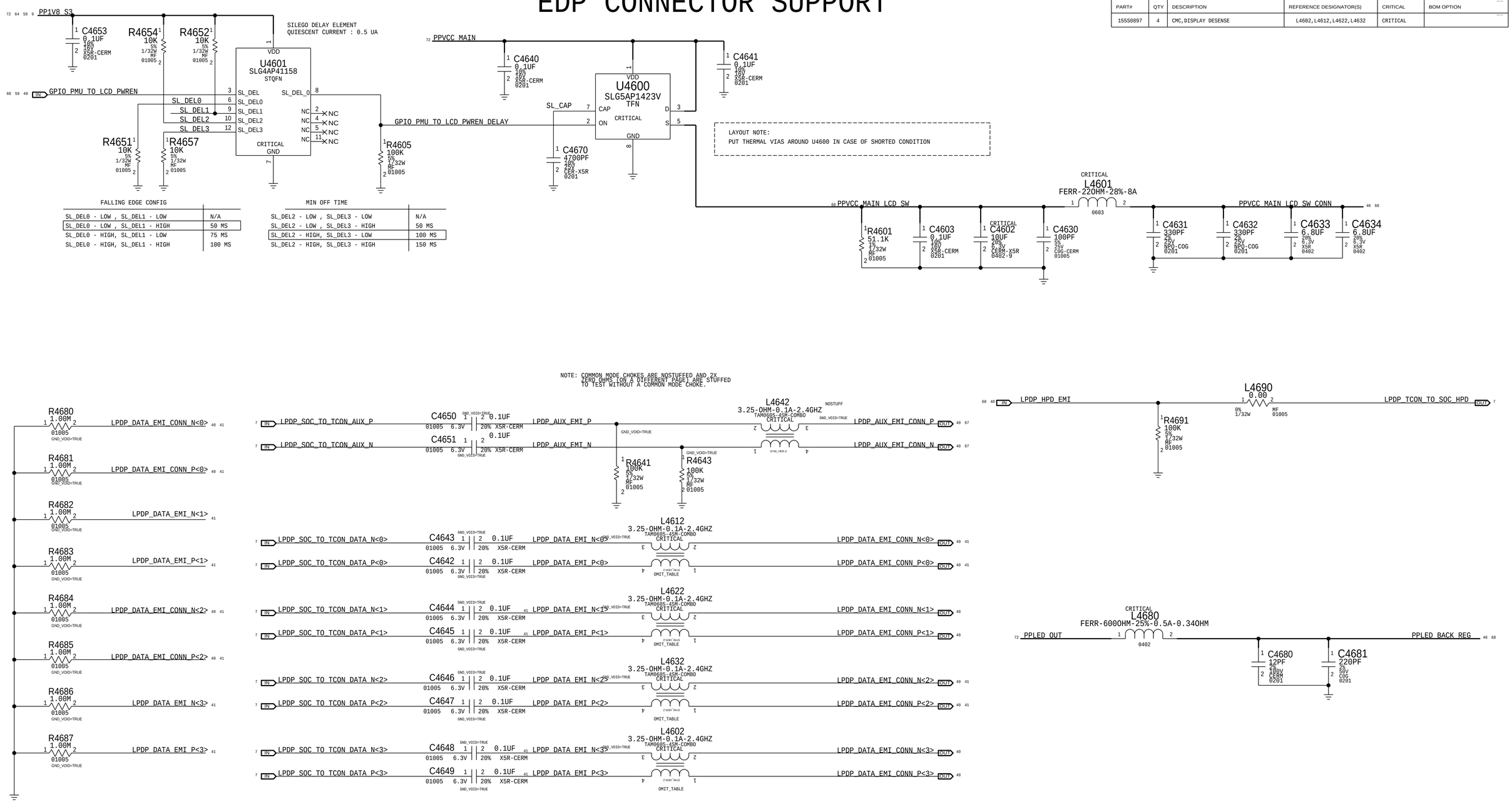

FALLING EDGE CONFIG

SL_DEL0 - LOW , SL_DEL1 - LOW	N/A
SL_DEL0 - LOW , SL_DEL1 - HIGH	50 MS
SL_DEL0 - HIGH, SL_DEL1 - LOW	75 MS
SL_DEL0 - HIGH, SL_DEL1 - HIGH	100 MS

MIN OFF TIME

SL_DEL2 - LOW , SL_DEL3 - LOW	N/A
SL_DEL2 - LOW , SL_DEL3 - HIGH	50 MS
SL_DEL2 - HIGH, SL_DEL3 - LOW	100 MS
SL_DEL2 - HIGH, SL_DEL3 - HIGH	150 MS

SYNC_MASTER=J317_MLB_B SYNC_DATE=11/16/2018

PAGE TITLE

DISPLAY: EDP SUPPORT

WIFI/BT

CLASS TO CLASS SPACING		
CLASS NAME	CLASS NAME	CONSTRAINT SET
WLAN_SHIELD	WLAN_SHIELD	DEFAULT
WLAN_SHIELD	GND	DEFAULT

DOMAIN (P,P,S)	NET RULE ASSIGNMENT	
	CONSTRAINT SET	COMMA SEPARATED NET NAMES (WILDCARD SUPPORT EX: DDR*)
P	A_50_WIDE_2_L1_THIN_SE	
P	A_50_THIN_2_SE	
P	A_50_WIDE_SE	
P	A_50_THIN_SE	

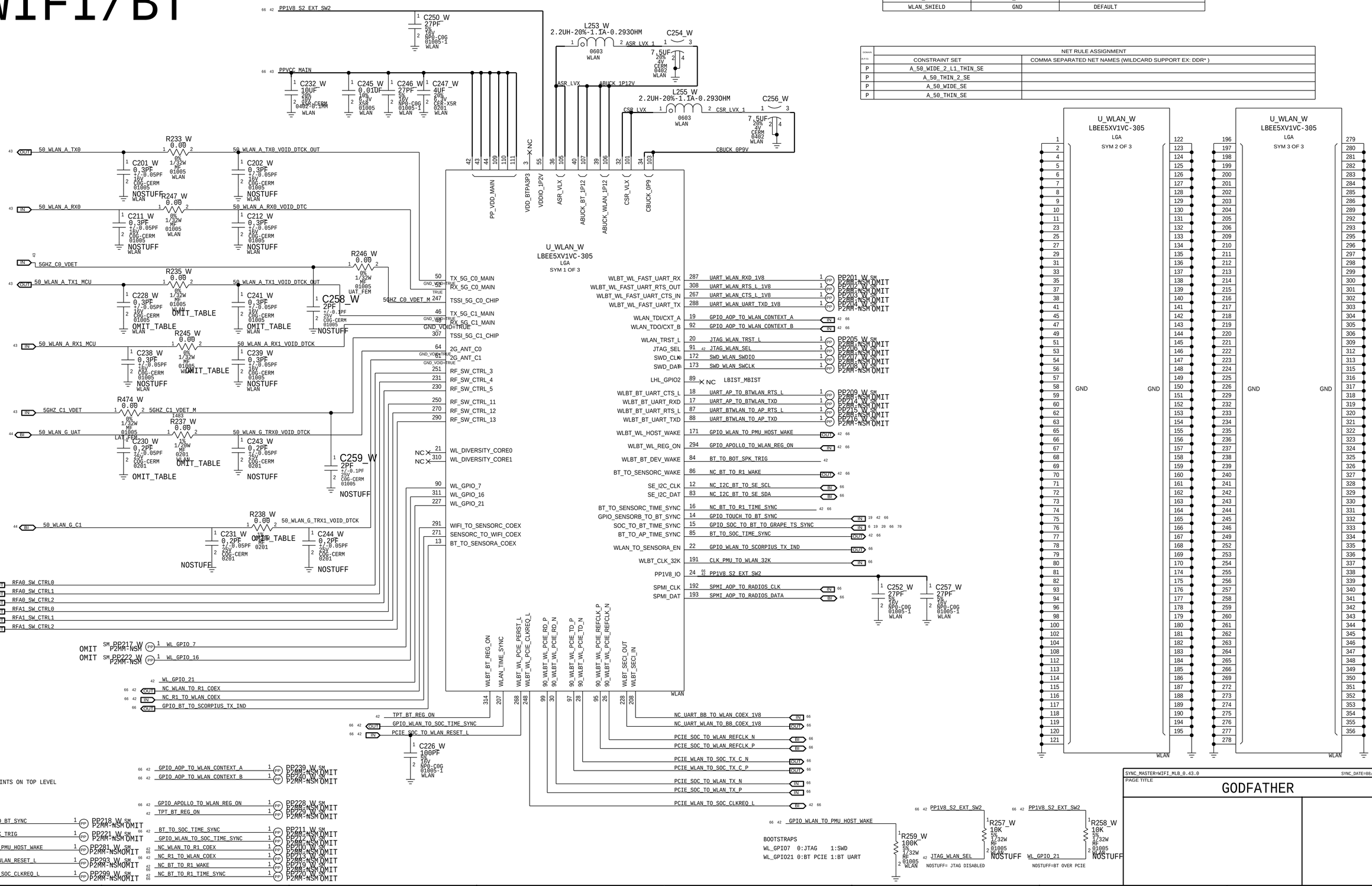

SYNC_MASTER=WIFI_MLB_0.43.0 SYNC_DATE=08/12/2019

PAGE TITLE

GODFATHER

J417: DIET COKE REMOTE FEMS

5GHZ UAT FEED

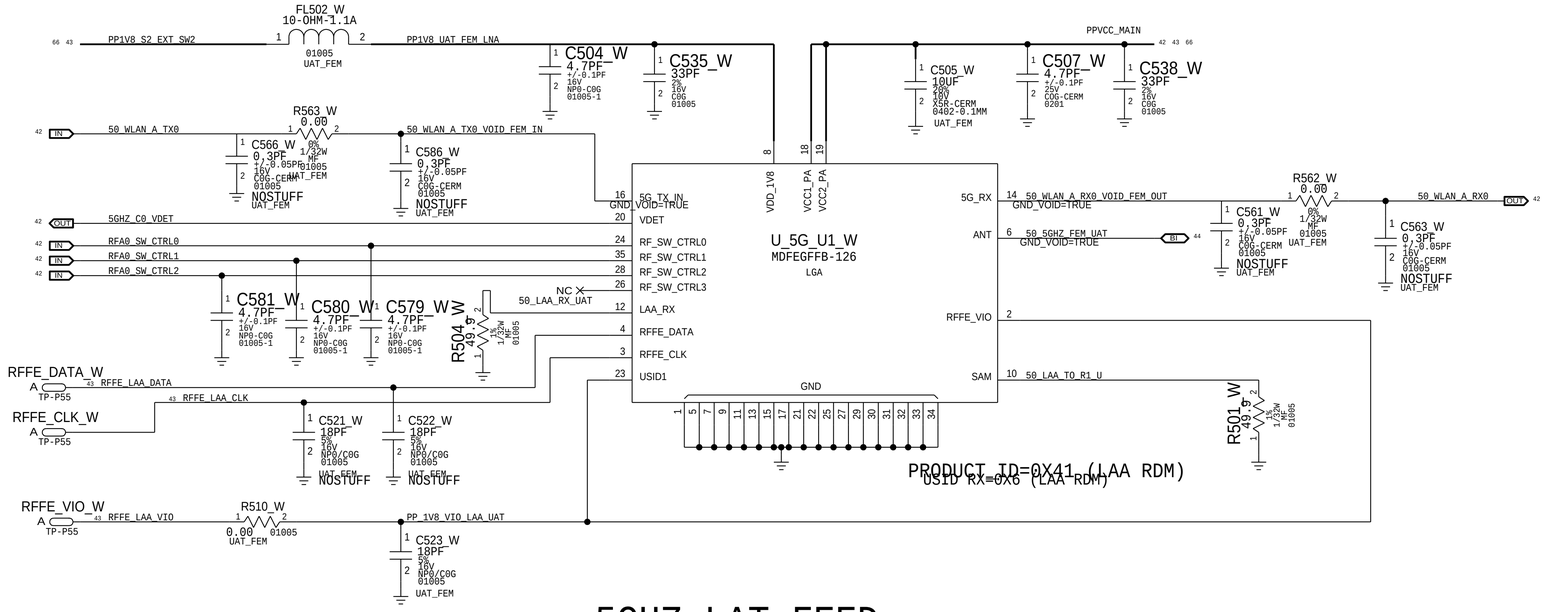

5GHZ LAT FEED

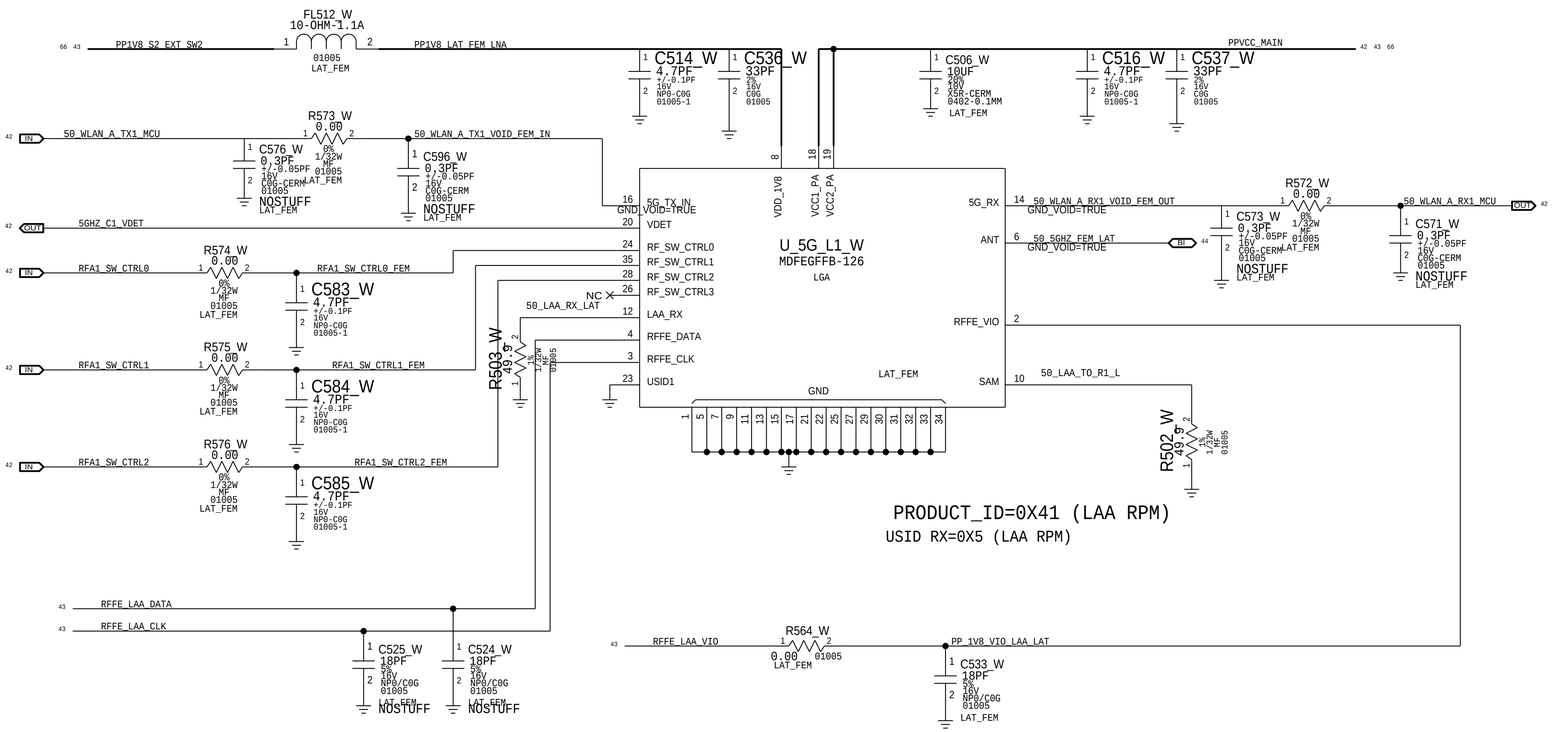

SYNC_MASTER=WIFI_MLB_0.43.0 SYNC_DATE=08/12/2019

PAGE TITLE

J417: Remote FEMs

J417: FRONT END

ANT5T (UPPER)

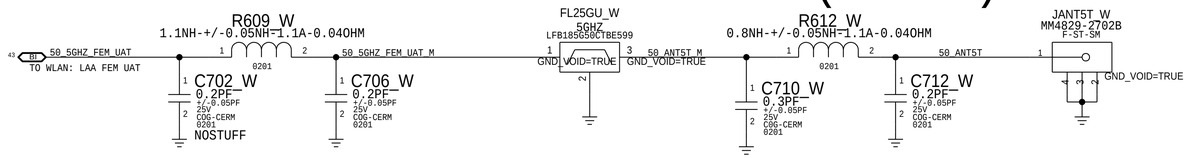

WF8 (UPPER RIGHT)

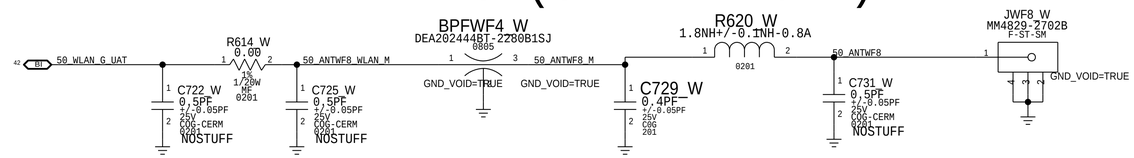

ANT5B (LOWER)

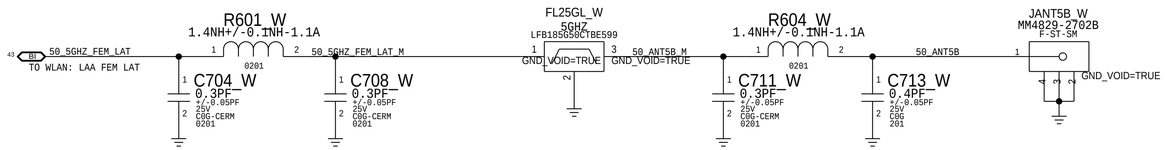

WF7 (UPPER LEFT)

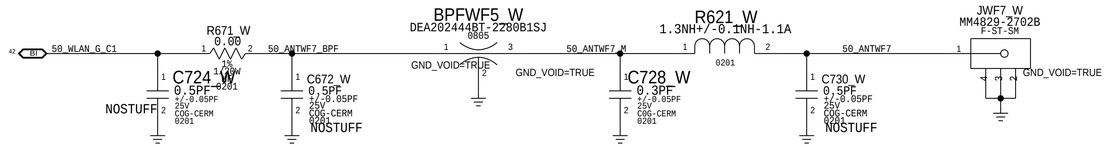

PART#	QTY	DESCRIPTION	REFERENCE DESIGNATOR(S)	BOM OPTION
152S00153	1	IND,FILM,1.0NH,1.1A,0201	R237_W	
131S0431	1	CAP,CER,C0G,0.2P,0201,H-Q	C243_W	
152S00151	1	IND,FILM,0.8NH,,1.1A,UH-Q,0201	R238_W	
118S0161	1	RES 0, 01005	R235_W	
117S0161	1	CAPCAP,CER,C0G,0.2PF,,01005,HQ	C241_W	NOSTUFF
131S0893	1	CAP,CER,C0G,0.2PF,,01005,HQ	C228_W	NOSTUFF
117S0161	1	RES,MF,0 OHM,1/32W,01005	R245_W	
131S0431	1	CAP,CER,COG,0.2P,0201,H-Q	C230_W	NOSTUFF
131S0431	1	CAP,CER,COG,0.2P,0201,H-Q	C231_W	

SYNC_MASTER=WIFI_MLB_0.43.0 SYNC_DATE=08/12/2019

PAGE TITLE

J417: Front End

PART NUMBER	ALTERNATE FOR PART NUMBER	REFERENCE DESIGNATOR(S)	DESCRIPTION	BOM OPTION
152S00992	152S00985	L6000	0.47UH 4A 2012 TAIYO	

RCAM ADAMS PMU

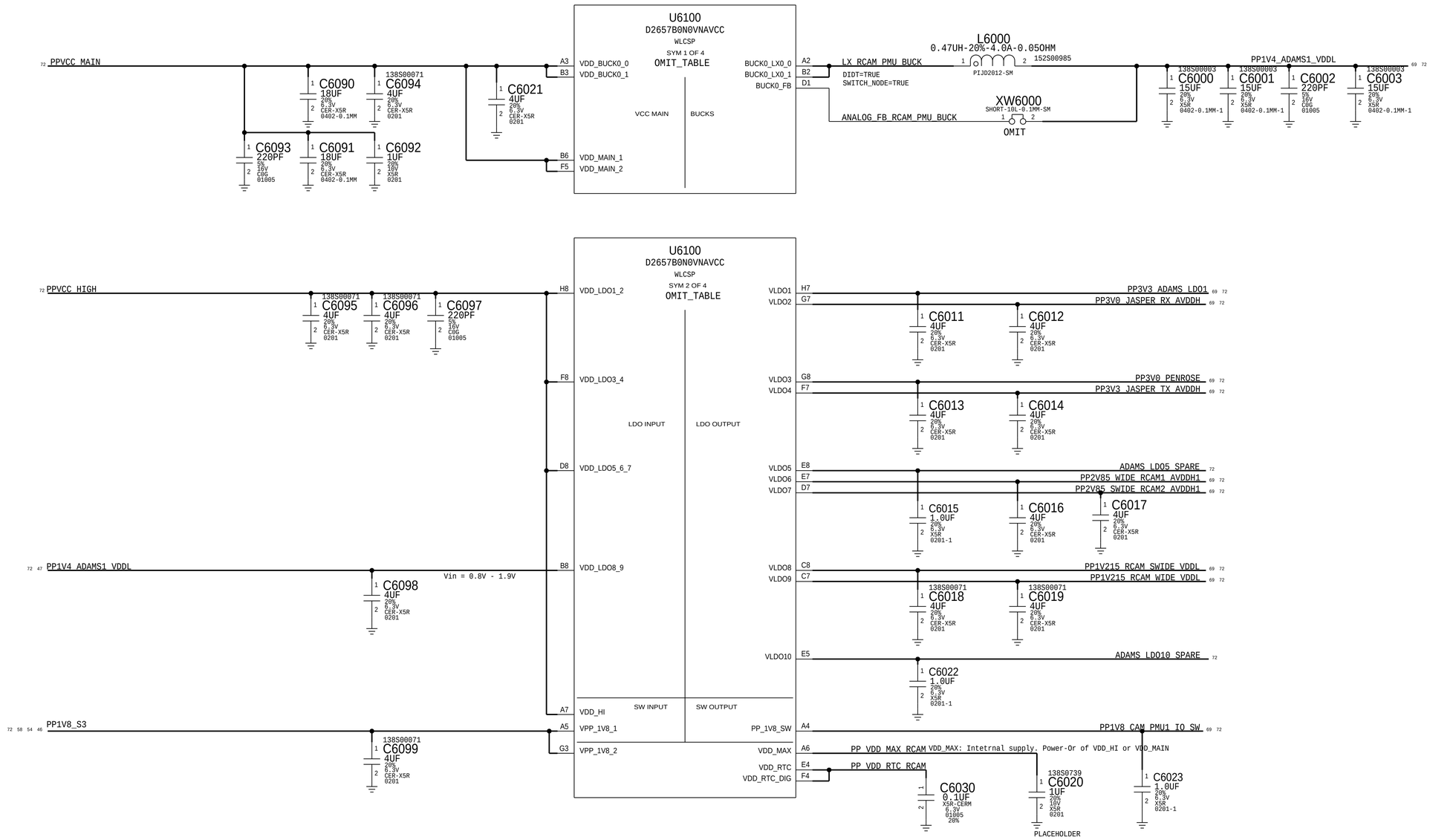

SYNC_MASTER=DEV_PANORAMA_0.3.0 SYNC_DATE=08/12/2019

PAGE TITLE

CAMERA: ADAMS POWER (1/2)

RCAM ADAMS PMU IO

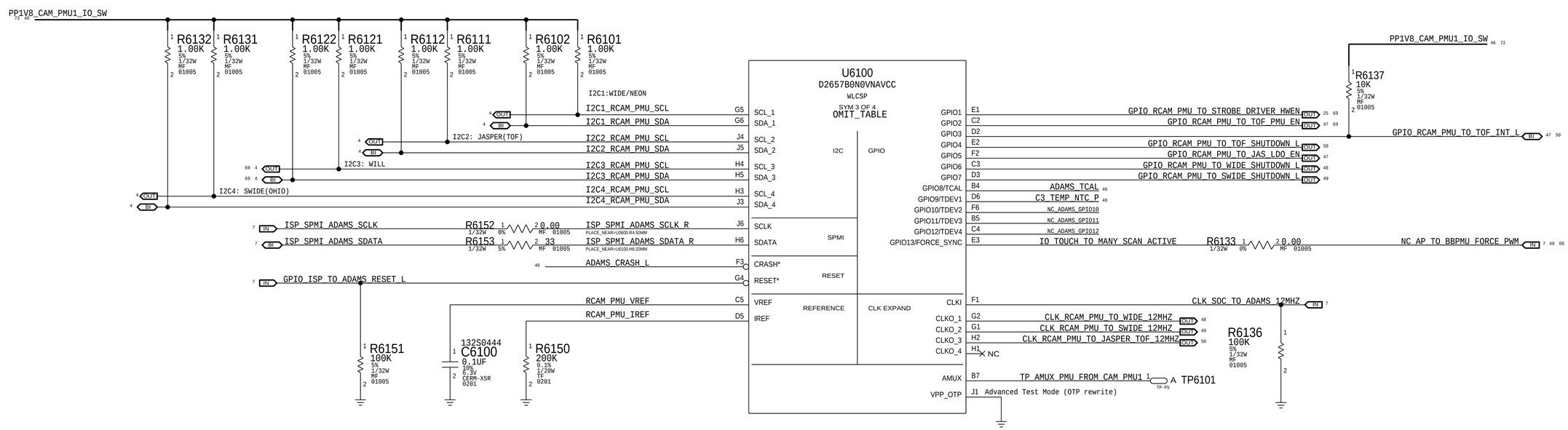

PRIVACY MODE - CRASH

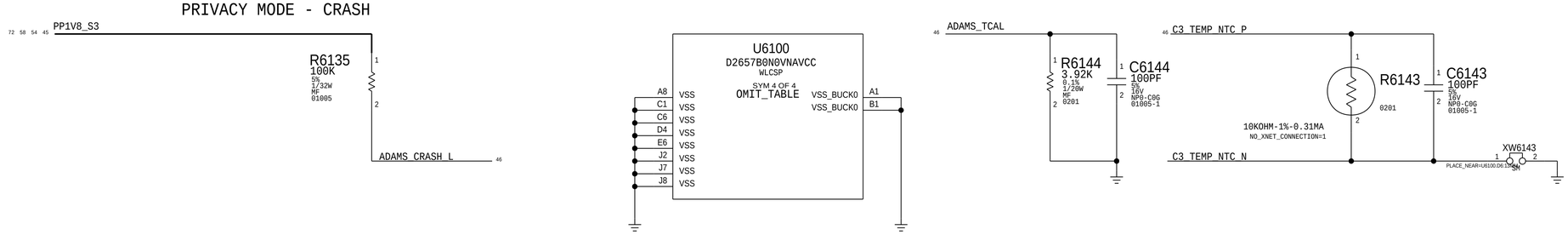

SYNC_MASTER=DEV_PANORAMA_0.3.0 SYNC_DATE=08/12/2019

PAGE TITLE

CAMERA: ADAMS IO (2/2)

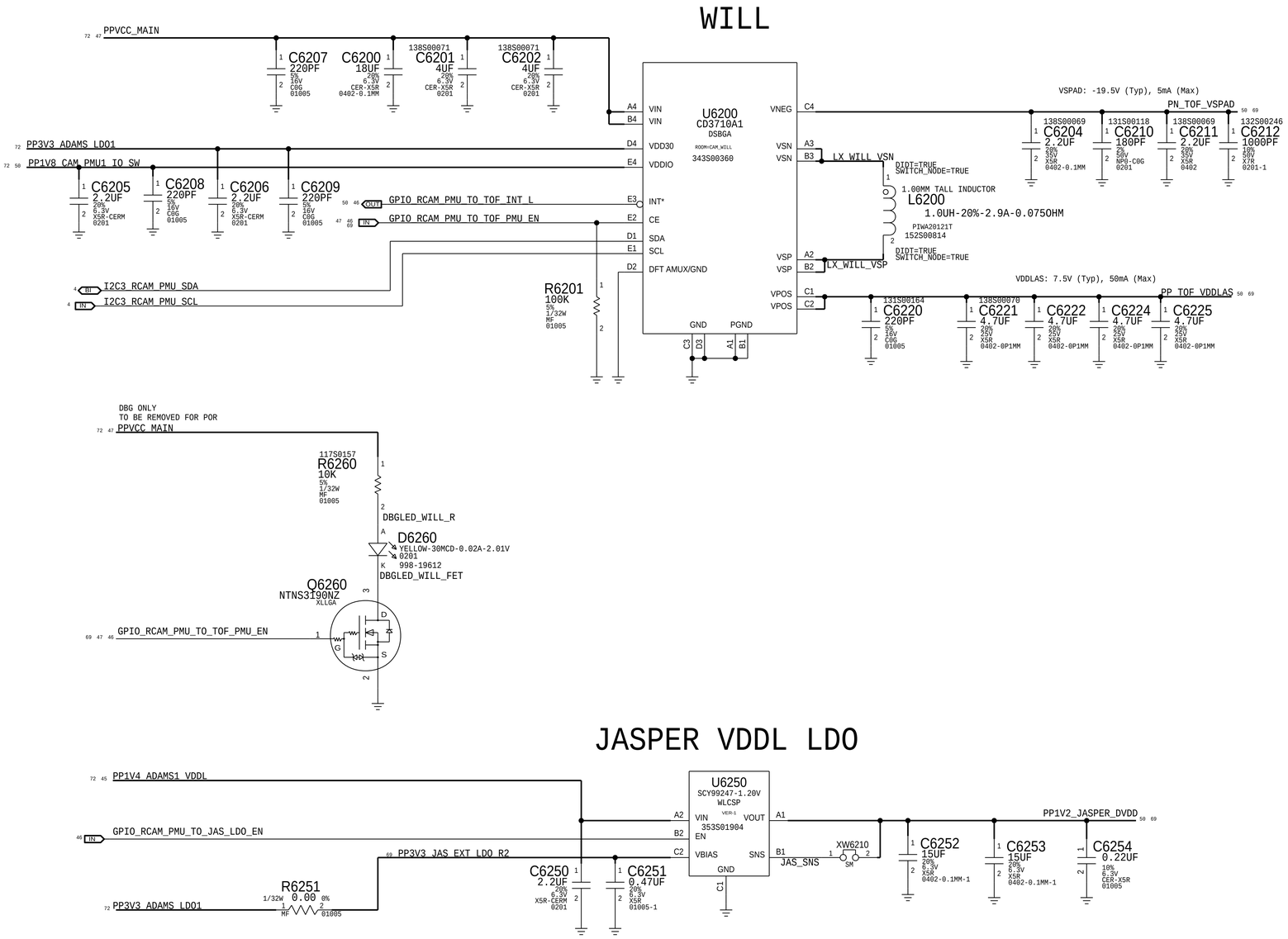

SYNC_MASTER=J421_P2_CHINA SYNC_DATE=05/12/2010

PAGE TITLE

CAMERA: JASPER POWER

WIDE RCAM1 B2B

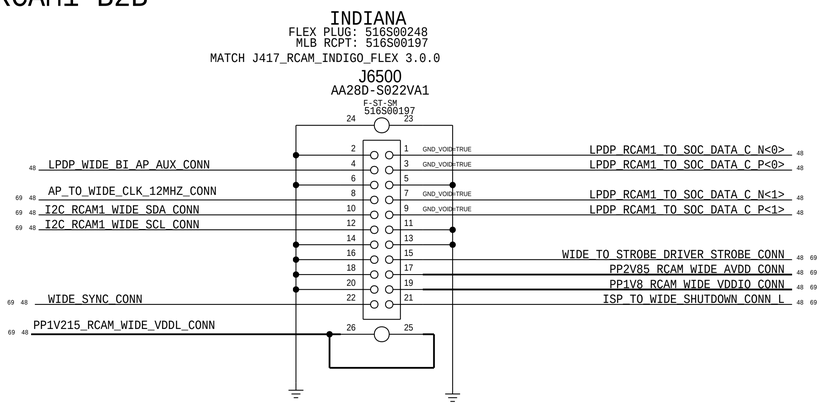

POWER FILTERING

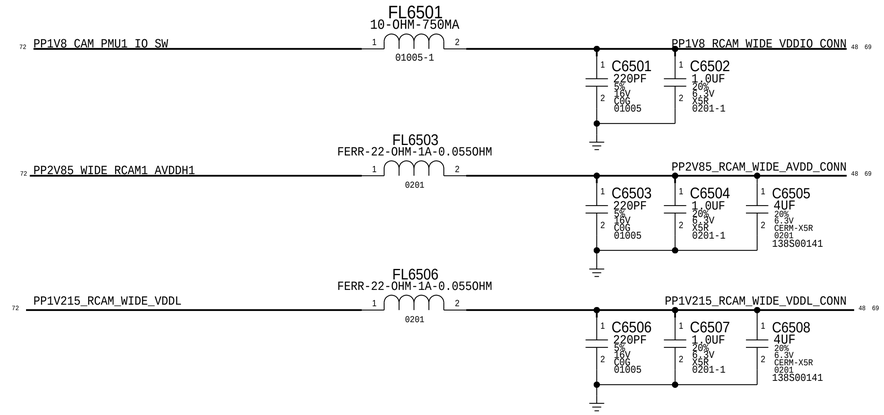

ISP I2C

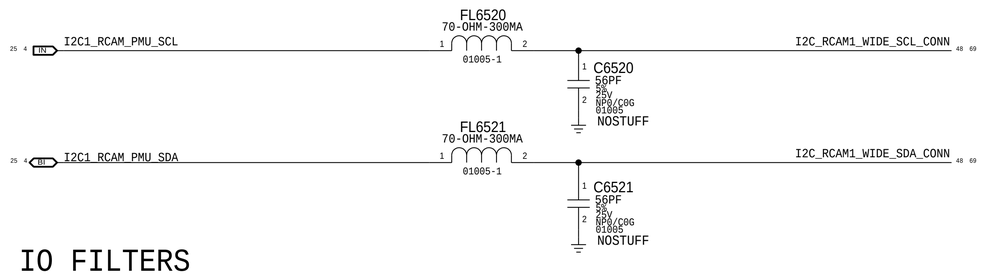

IO FILTERS

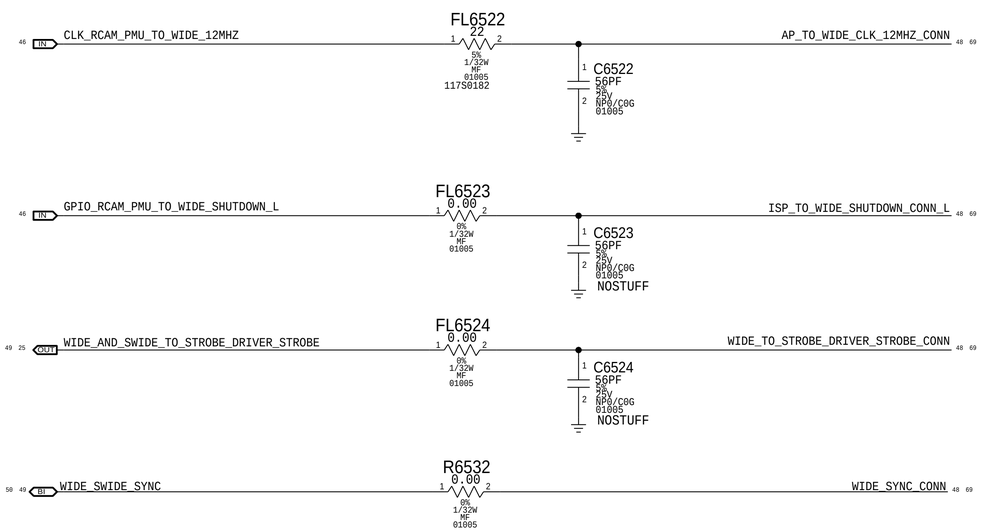

LPDP FILTERS

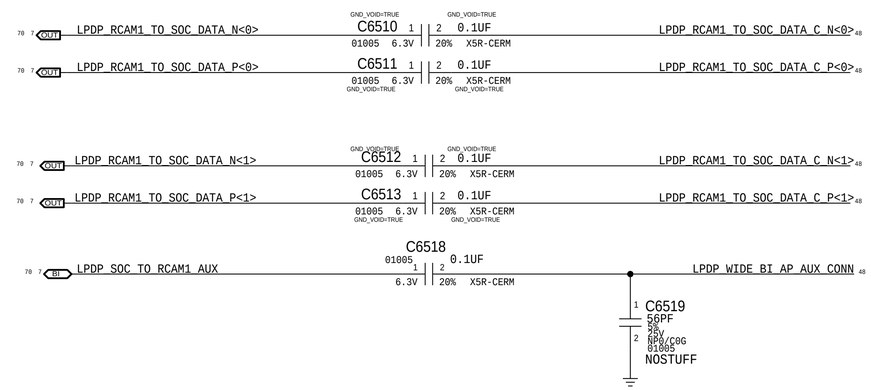

SYNC_MASTER=J421_P2_CHINA SYNC_DATE=05/13/2019

PAGE TITLE

CAMERA: B2B RCAM1 WIDE

SWIDE RCAM2 B2B

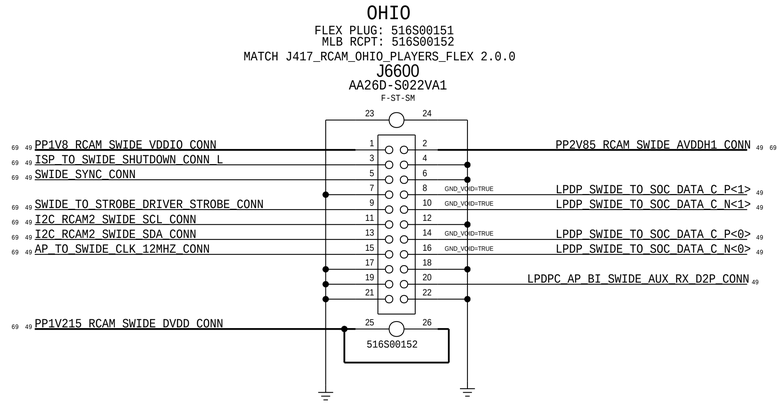

POWER FILTERING

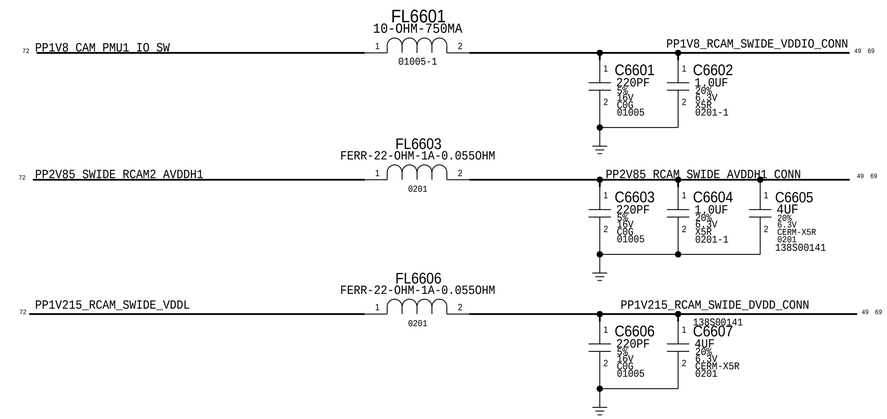

ISP I2C

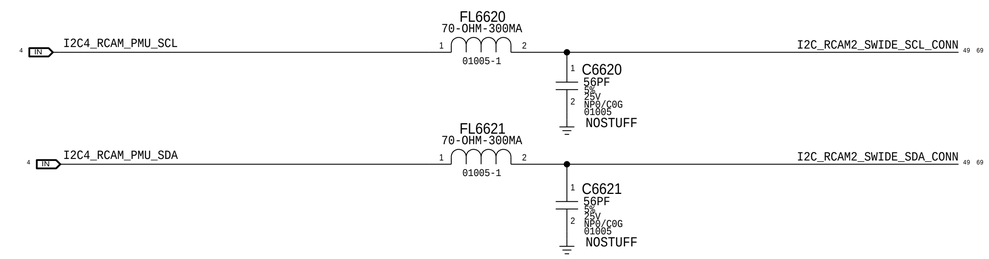

IO FILTERS

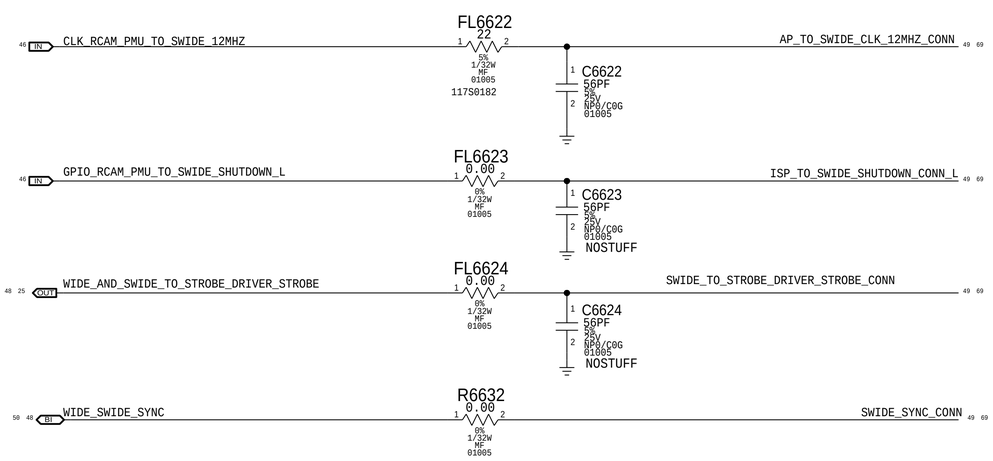

LPDP FILTERS

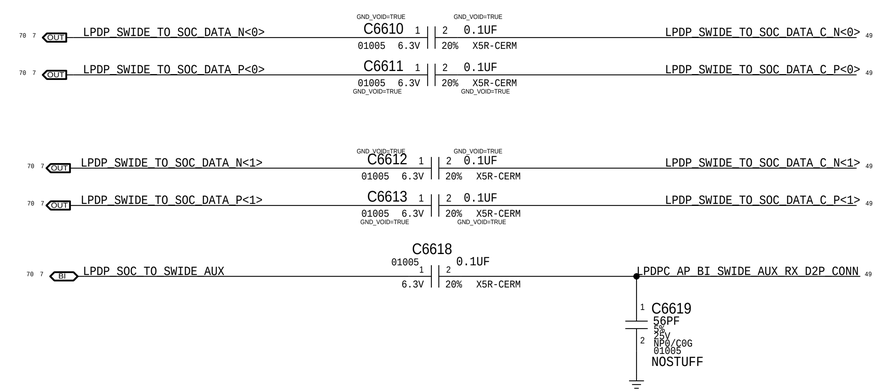

SYNC_MASTER=J421_P2_CHINA SYNC_DATE=05/13/2019

PAGE TITLE

CAMERA: B2B RCAM2 SWIDE

JASPER B2B

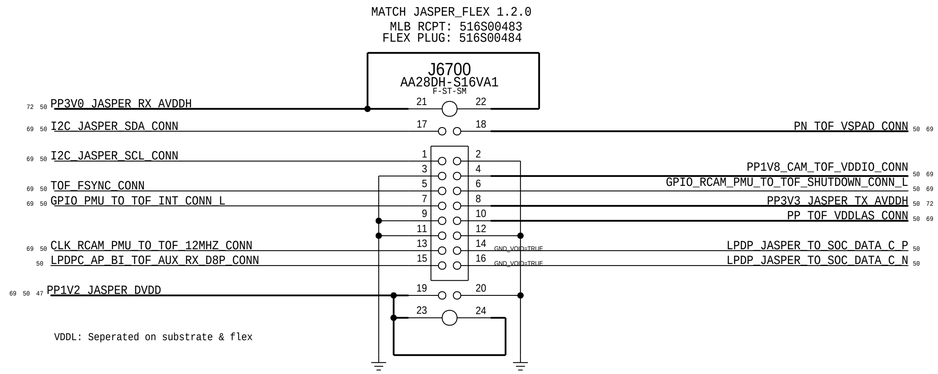

Power Filtering

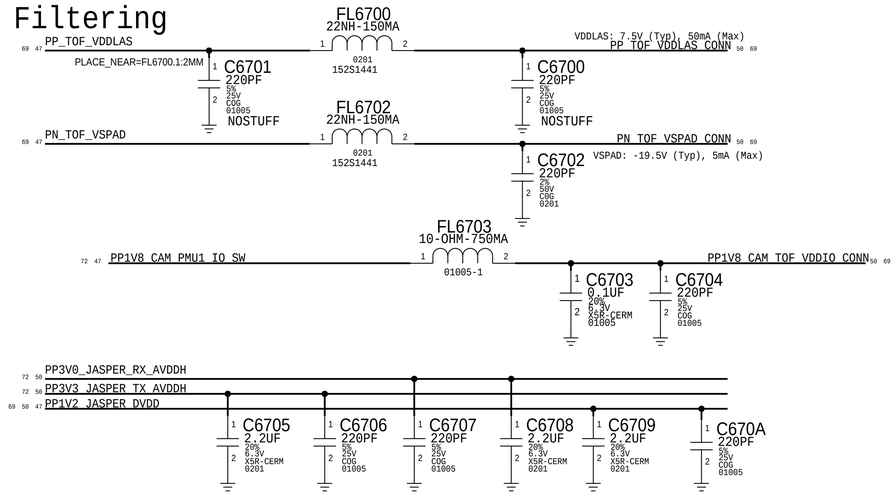

JASPER I2C

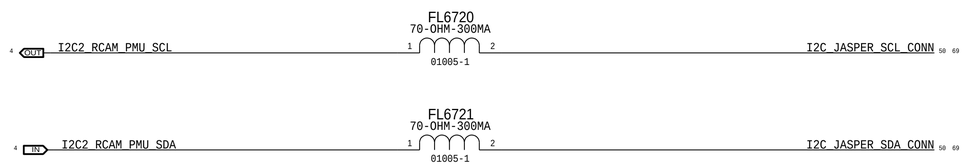

IO Filters

LPDP Filters

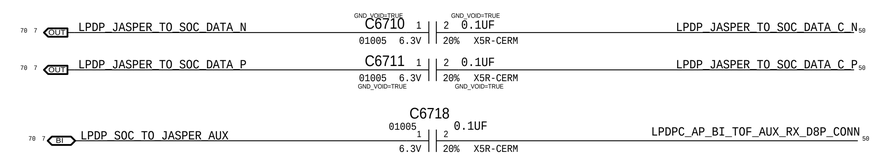

SYNC_MASTER=J418_SYNC_P2 SYNC_DATE=08/12/2019

PAGE TITLE

CAMERA: B2B JASPER

STOCKHOLM

NFC CONTROLLER

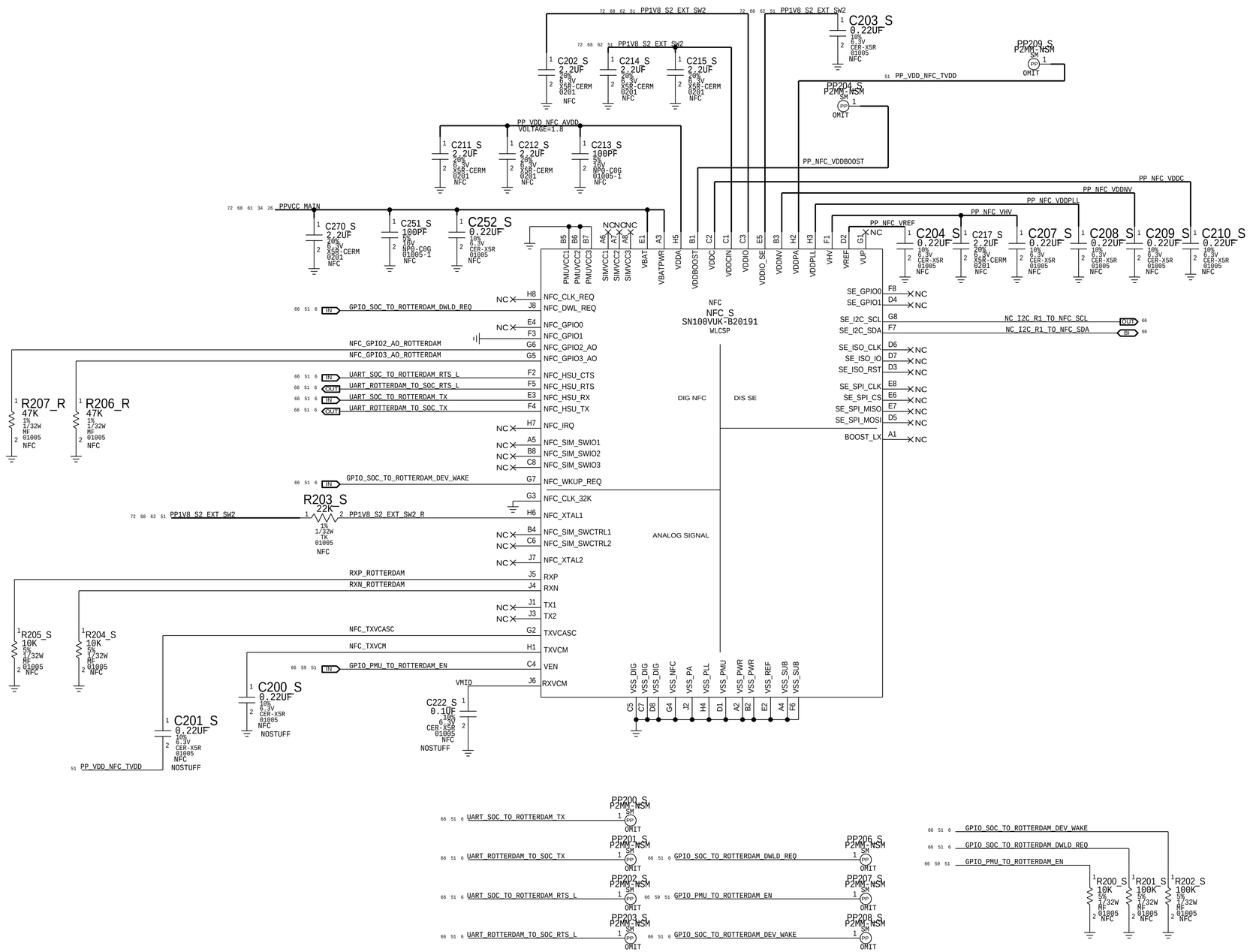

SYNC_MASTER=J421_P2_CHINA SYNC_DATE=05/13/2019

PAGE TITLE

NFC CONTROLLER

GPM: DMIC GATING

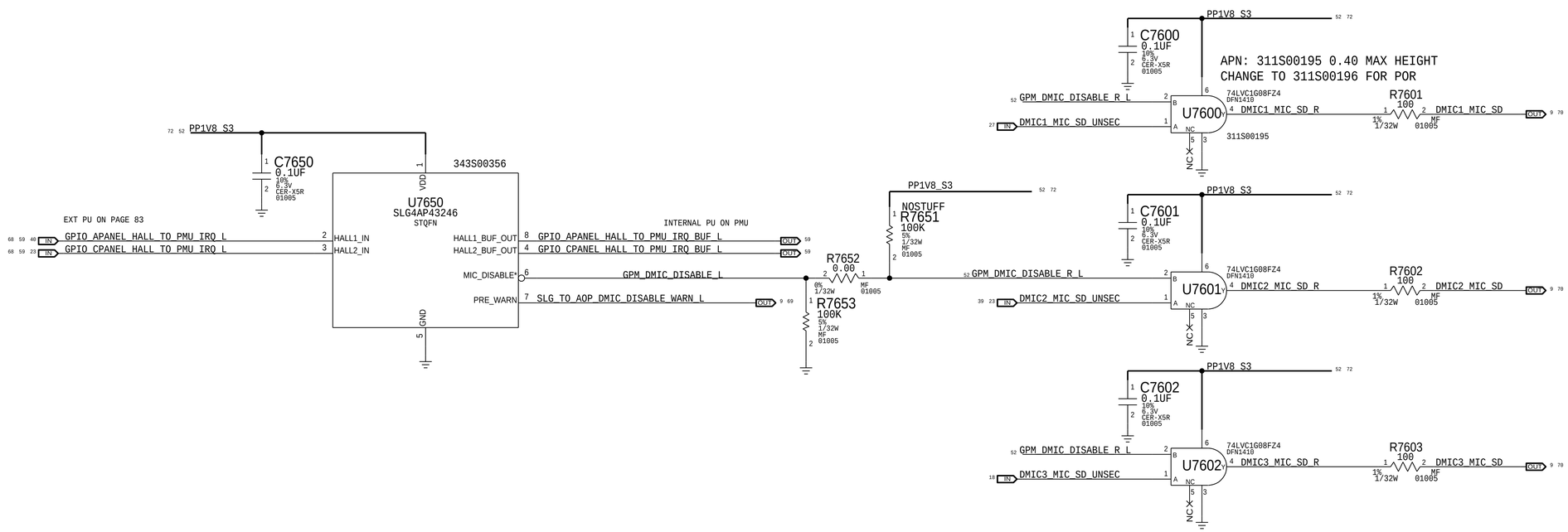

SYNC_MASTER=J421_P2_CHINA SYNC_DATE=05/13/2019

PAGE TITLE

GPM

APOLLO PMU (1/3)

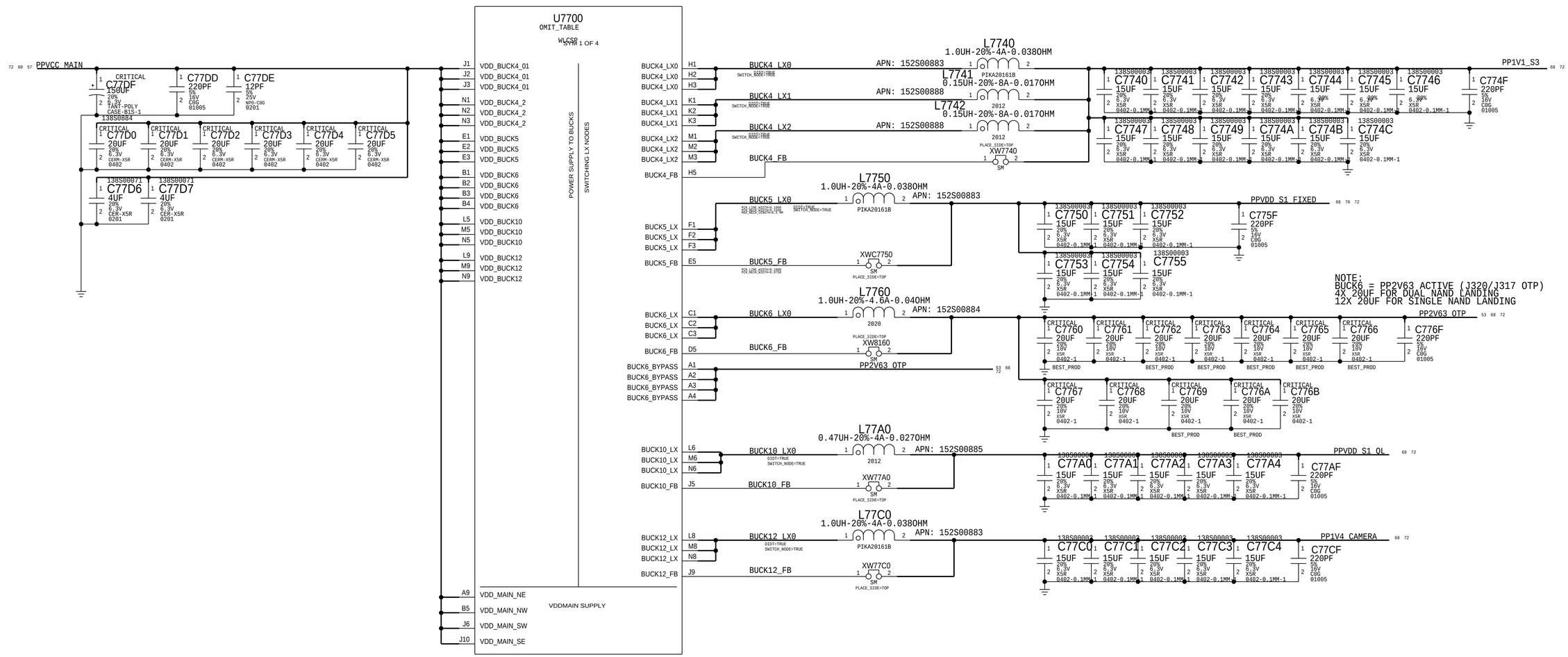

SYNC_MASTER=J317_MLB_B SYNC_DATE=11/16/2018

PAGE TITLE

POWER: APOLLO (1/3)

APOLLO PMU (2/3)

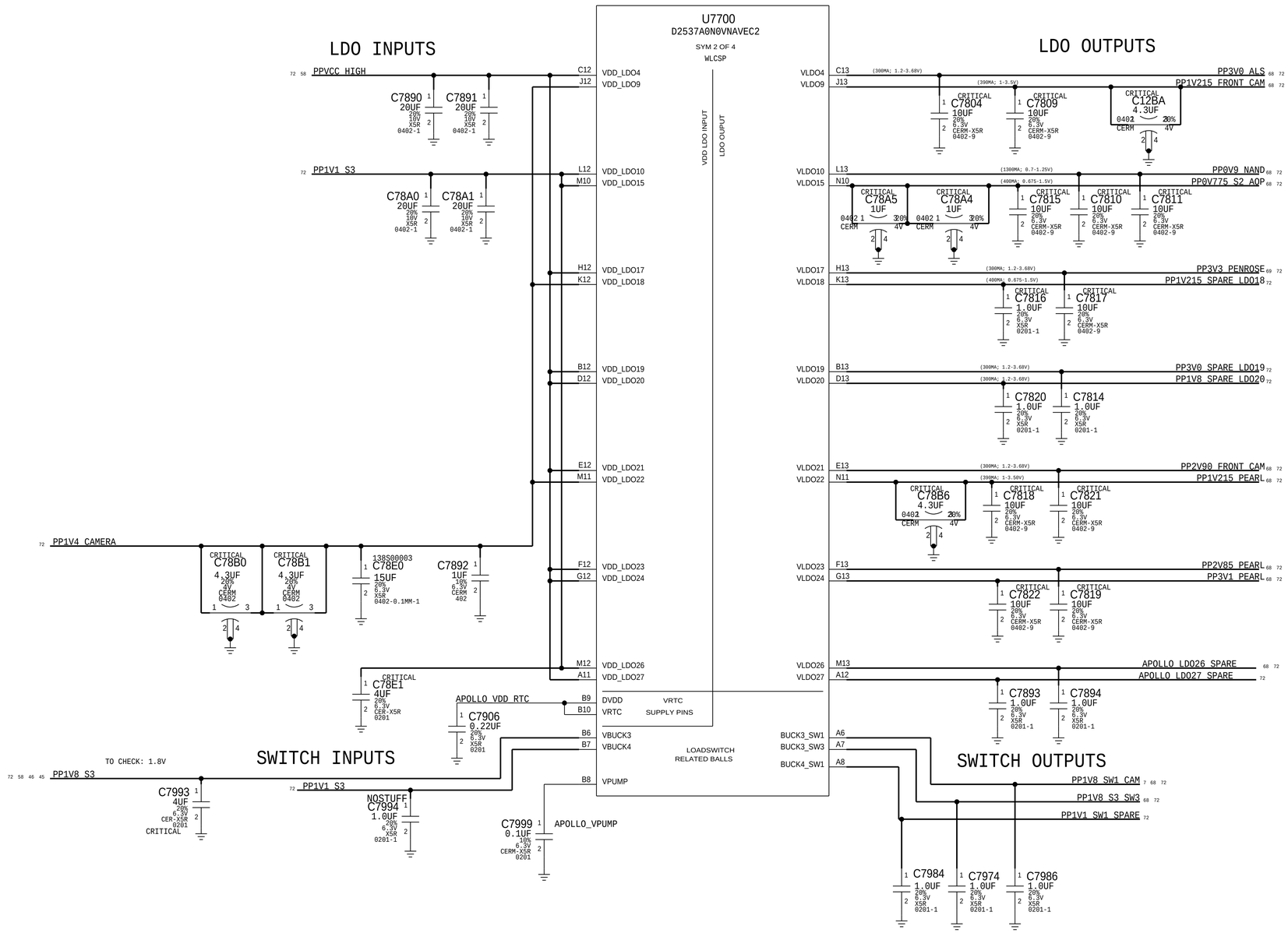

SYNC_MASTER=J317_MLB_B SYNC_DATE=11/16/2018

PAGE TITLE

POWER: APOLLO (2/3)

APOLLO PMU (3/3)

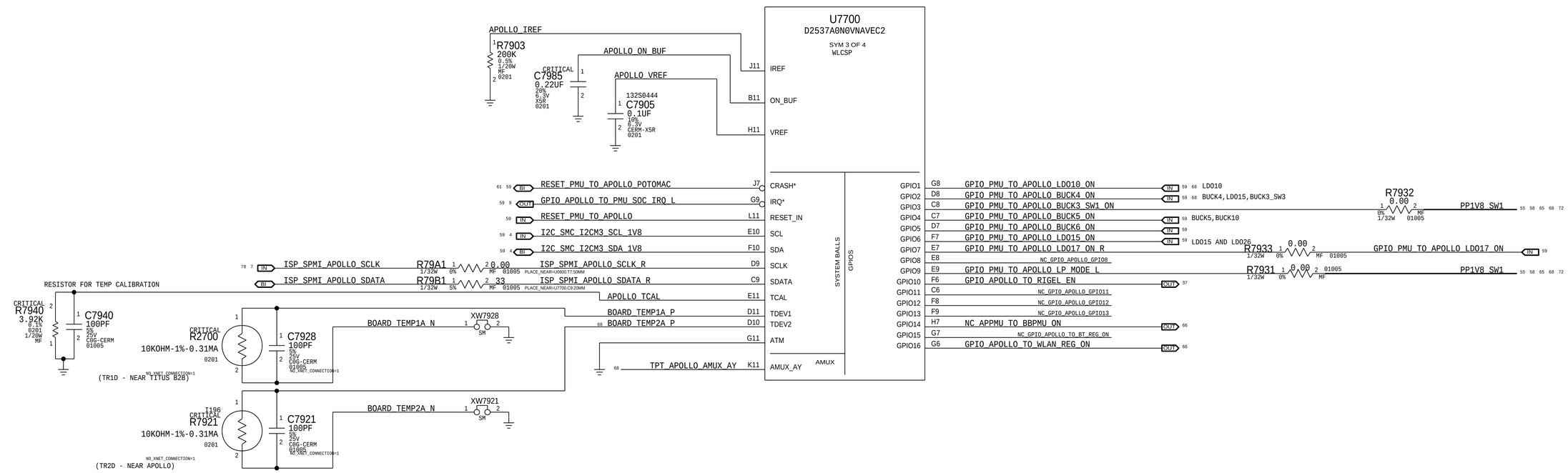

SYNC_MASTER=J317_MLB_B	SYNC_DATE=07/02/2019
PAGE TITLE	
POWER: APOLLO (3/3)	

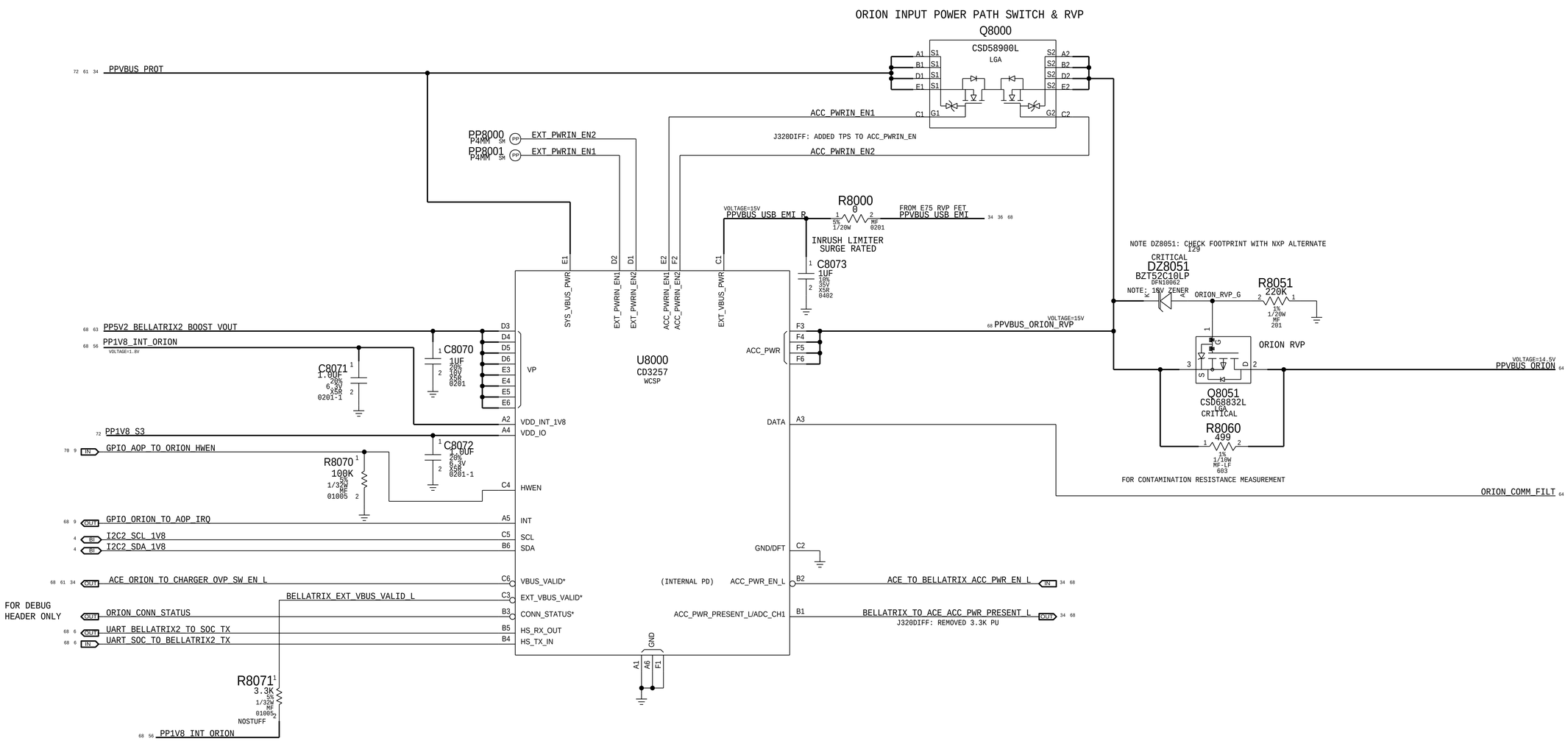

SYNC_MASTER=J421_P2_CHINA SYNC_DATE=05/13/2019

PAGE TITLE

ORION CONNECTOR & POWER PATH

PART NUMBER	ALTERNATE FOR PART NUMBER	REFERENCE DESIGNATOR(S)	DESCRIPTION	BOM OPTION
152S01037	152S00887	L8101,ETC.	0.15UH 8.8A TAIYO	
152S01070	152S00887	L8101,ETC.	0.15UH 9.5A SUNLORD	

ATHENA BUCKS

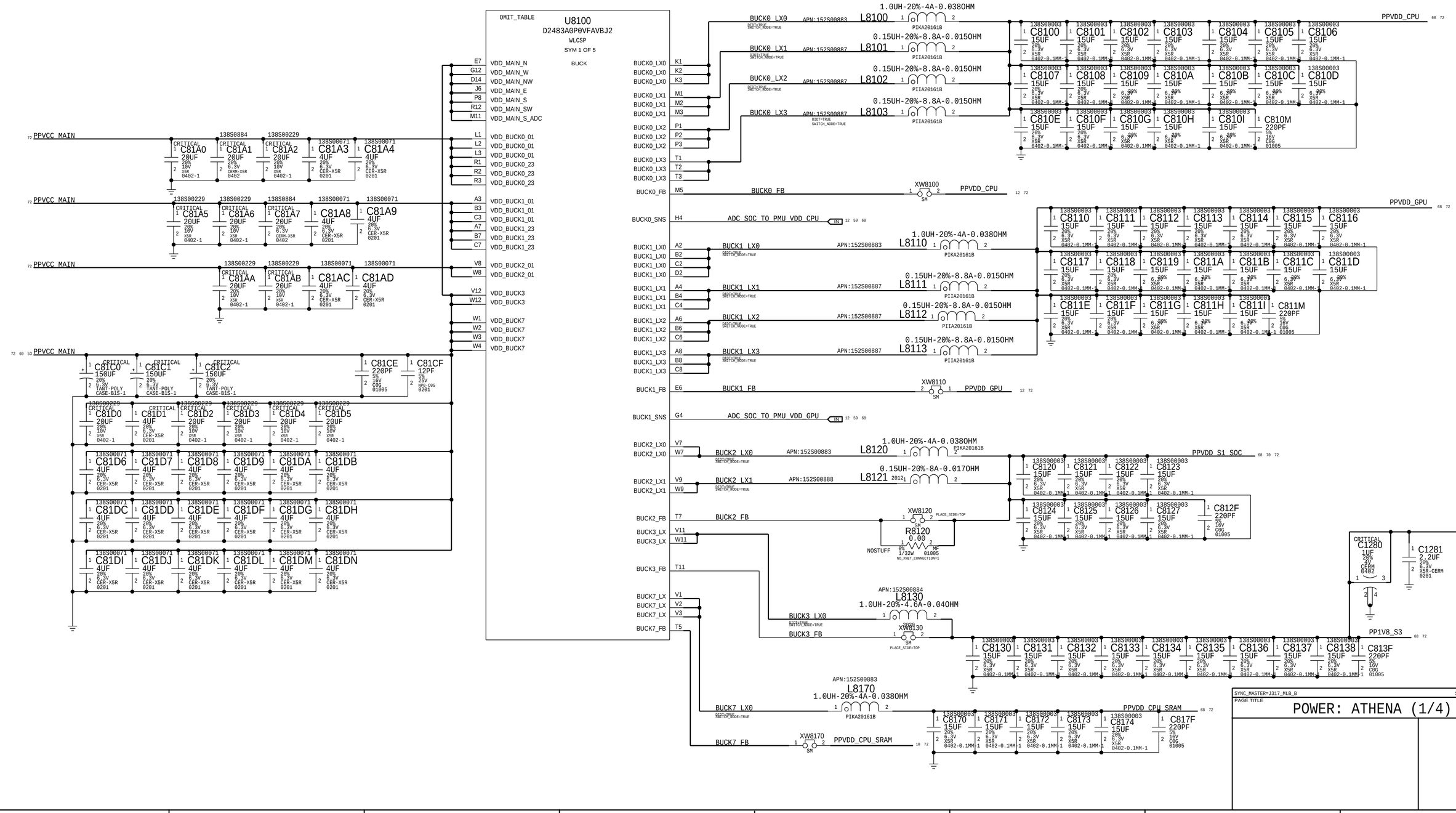

ATHENA PMU (2/4)

PART NUMBER	ALTERNATE FOR PART NUMBER	BOM OPTION	REF DES	COMMENTS:
197S0399	197S0392		Y8300	RDAR://PROBLEM/9936684
138S0703	138S0648		C8250,ECT	ALT FOR 4.7UF,6.3V,0402

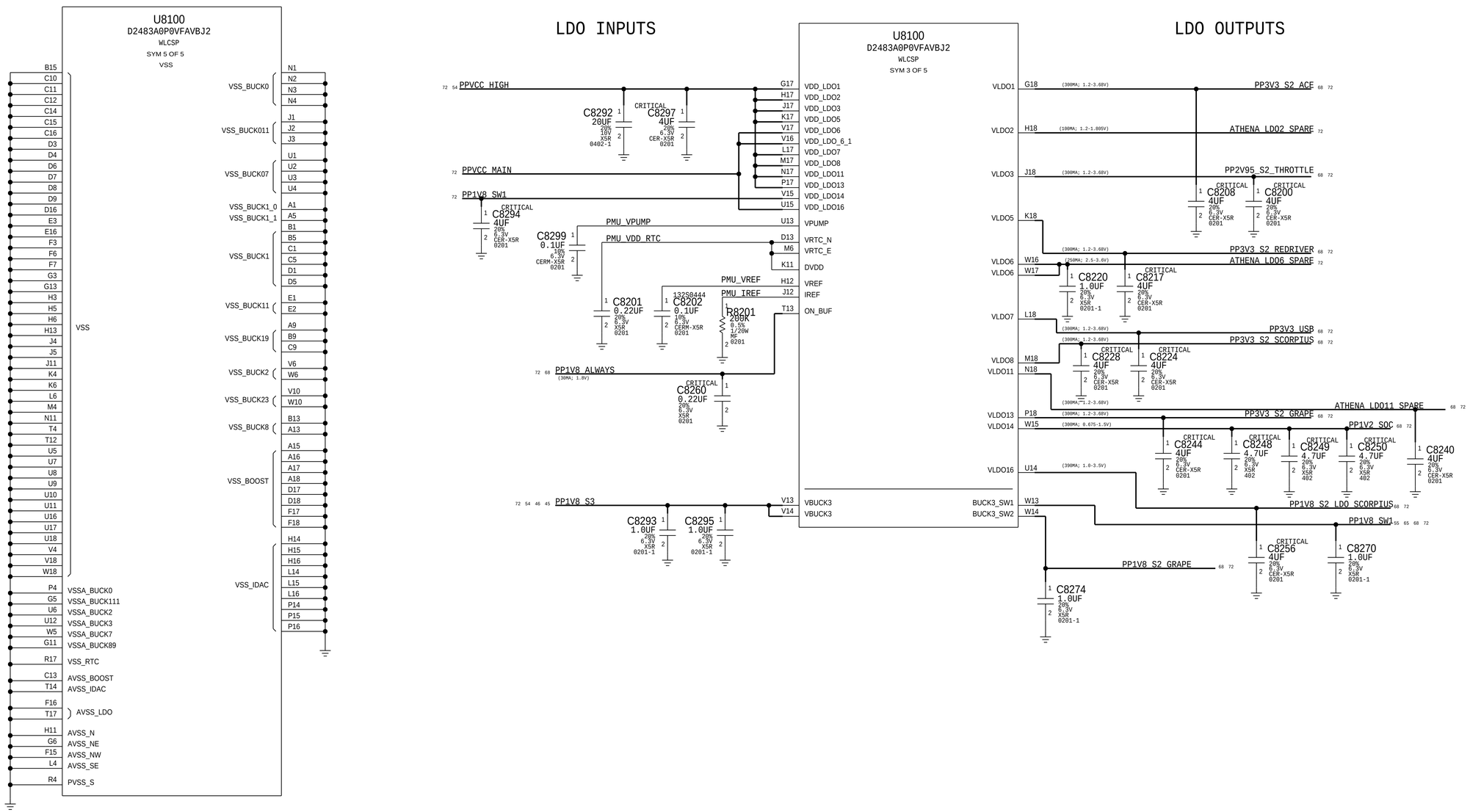

SYNC_MASTER=J317_MLB_B SYNC_DATE=11/16/2018

PAGE TITLE

POWER: ATHENA (2/4)

ATHENA PMU (3/4)

PART NUMBER	ALTERNATE FOR PART NUMBER	BOM OPTION	REF DES	COMMENTS:
118S0764	118S0717		R8340	RDAR://PROBLEM/8380367
107S0150	107S0208		R8321-R8328	RDAR://PROBLEM/8380367

PLACE CAPS AND XWS NEAR PMU

Ref	Part	Net	Pin	Place
I682	R8328 10KOHM-1%-0.31MA 0201	BOARD_TEMP2_P	68	PLACE_NEAR=U8100.P13:13MM
	C8328 100PF 5% 25V C0G-CERM 01005	BOARD_TEMP2_N	68	XW8328 SM PLACE_NEAR=U8100.P13:13MM
I683	R8321 10KOHM-1%-0.31MA 0201	BOARD_TEMP3_P	68	PLACE_NEAR=U8100.N13:13MM
	C8321 100PF 5% 25V C0G-CERM 01005	BOARD_TEMP3_N	68	XW8321 SM PLACE_NEAR=U8100.N13:13MM
I669	R8322 10KOHM-1%-0.31MA 0201	BOARD_TEMP4_P	68	PLACE_NEAR=U8100.N12:13MM
	C8322 100PF 5% 25V C0G-CERM 01005	BOARD_TEMP4_N	68	XW8322 SM PLACE_NEAR=U8100.N12:13MM
I697	R8323 10KOHM-1%-0.31MA 0201	BOARD_TEMP5_P	68	PLACE_NEAR=U8100.M13:13MM
	C8323 100PF 5% 25V C0G-CERM 01005	BOARD_TEMP5_N	68	XW8323 SM PLACE_NEAR=U8100.M13:13MM
I699	R8324 10KOHM-1%-0.31MA 0201	BOARD_TEMP6_P	68	PLACE_NEAR=U8100.M12:13MM
	C8324 100PF 5% 25V C0G-CERM 01005	BOARD_TEMP6_N	68	XW8324 SM PLACE_NEAR=U8100.M12:13MM
I700	R8325 10KOHM-1%-0.31MA 0201	BOARD_TEMP7_P	68	PLACE_NEAR=U8100.K13:13MM
	C8325 100PF 5% 25V C0G-CERM 01005	BOARD_TEMP7_N	68	XW8325 SM PLACE_NEAR=U8100.K13:13MM
I702	R8326 10KOHM-1%-0.31MA 0201	BOARD_TEMP8_P	68	PLACE_NEAR=U8100.L12:13MM
	C8326 100PF 5% 25V C0G-CERM 01005	BOARD_TEMP8_N	68	XW8326 SM PLACE_NEAR=U8100.L12:13MM

(TP2D - NEAR IO CONN) (TP3D - NEAR WIFI) (TP4D - NEAR C3 PENINSULA) (TP5D - NEAR NAND) (TP6D - NEAR POTOMAC) (TP7D - NEAR PMU) (TP8D - NEAR SOC)

U8100
D2483A0P0VFAVBJ2
WLCSP
SYM 4 OF 5

Net	Pin	Block
ADC_SOC_TO_PMU_ANALOGMUX_OUT	T6	AMUX_A0
ADC_SOC_TO_PMU_VDD_CPU	R6	AMUX_A1
ADC_SOC_TO_PMU_VDD_GPU	R5	AMUX_A2
ADC_SOC_TO_PMU_VDD_SOC	V5	AMUX_A3
TP_AMUX_AY	P6	AMUX_AY
NC_ADC_BB_TO_PMU_SW1_VOUT	R7	AMUX_B0
NC_ADC_BB_TO_PMU_SW3_VOUT	P7	AMUX_B1
NC_ADC_BB_TO_PMU_PP_1V85	N6	AMUX_B2
NC X	N5	AMUX_B3
TP_AMUX_BY	P5	AMUX_BY
PA_NTC_P	R13	TDEV1
	P13	TDEV2
	N13	TDEV3
	N12	TDEV4
	M13	TDEV5
	M12	TDEV6
	K13	TDEV7
	L12	TDEV8
PMU_TCAL	K12	TCAL
PMU_EXTAL	R18	XTAL1
PMU_XTAL	T18	XTAL2
GPIO_PMU_TO_SOC_BTN_VOL_DOWN_L	M10	BUTTONO1
GPIO_PMU_TO_SOC_BTN_ONOFF_L	M9	BUTTONO2
GPIO_PMU_TO_SOC_BTN_VOL_UP_L	N8	BUTTONO3
DBL_CLICK_DET	E9	DBL_CLICK_DET
PMU_SHUTDOWN	F5	SHDWN
	J13	BRICK_ID
	L13	IM_MEAS
CLK_PMU_TO_AOP_32K	N9	SLEEP_32K
CLK_PMU_TO_WLAN_32K	N10	OUT_32K
ADC_IN7	P12	ADC_IN7
ATHENA_CRASH	R8	CRASH*
NC X	E12	VDD_HI_UVLO_DET
GPIO_PMU_TO_GPU_TRIGGER_1	E4	BUCK1_THROTTLE1*
GPIO_PMU_TO_GPU_TRIGGER_0	E5	BUCK1_THROTTLE0*
GPIO_PMU_TO_CPU_TRIGGER_1	K5	BUCK0_THROTTLE1*
GPIO_PMU_TO_CPU_TRIGGER_0	L5	BUCK0_THROTTLE0*

Ref	Net	Pin	Block
G10	GPIO_CPANEL_HALL_TO_PMU_IRQ_BUF_L		GPIO1
G9	GPIO_WLAN_TO_PMU_HOST_WAKE		GPIO2
G8	NC_GPIO_PMU_TO_R1_RESET_L		GPIO3
G7	NC_GPIO_BELFIELD_TO_PMU_WAKE_L		GPIO4
H10	NC_PMU_GPIO5		GPIO5
H9	NC_GPIO_BT_TO_PMU_HOST_WAKE		GPIO6
H8	NC_GPIO_SCORPIUS_TO_PMU_IRQ		GPIO7
H7	GPIO_PMU_TO_SOC_FORCE_DFU		GPIO8
J10	NC_PCIE_BB_TO_APPMU_WAKE_1V8_L		GPIO9
J9	NC_GPIO_CODEC_TO_PMU_WAKE_L		GPIO10
J8	GPIO_APANEL_HALL_TO_PMU_IRQ_BUF_L		GPIO11
J7	GPIO_PMU_TO_APOLLO_LDO17_ON		GPIO12
K10	GPIO_PMU_TO_APOLLO_LDO15_ON		GPIO13
K9	GPIO_POTOMAC_TO_PMU_WAKE		GPIO14
K8	GPIO_POTOMAC_TO_SOC_TO_PMU_IRQ_L		GPIO15
K7	GPIO_PMU_TO_NAND_LOW_BATT_L		GPIO16
L7	GPIO_PMU_TO_APOLLO_BUCK5_ON		GPIO17
L8	GPIO_PMU_TO_LCD_PWREN		GPIO18
L9	GPIO_PMU_TO_APOLLO_LDO10_ON		GPIO19
L10	GPIO_PMU_TO_APOLLO_BUCK4_ON		GPIO20
E14	GPIO_PMU_TO_1V8_EXT_SW2_ON		GPIO21
F13	NC_GPIO_PMU_GPIO22		GPIO22
M7	GPIO_PMU_TO_POTOMAC_LINCH_EN		GPIO23
F14	GPIO_PMU_TO_ROTTERDAM_EN		GPIO24
T15	NC_GPIO_NFC_TO_PMU_HOST_WAKE		GPIO25
T16	GPIO_PMU_TO_APOLLO_BUCK6_ON		GPIO26
R11	GPIO_BTN_VOL_DOWN_L		BUTTON1
P9	GPIO_BTN_ONOFF_L		BUTTON2
P10	GPIO_BTN_VOL_UP_L		BUTTON3
P11	NC_PMU_BTN4		BUTTON4
T10	GPIO_SOC_TO_PMU_WDOG		RESET_IN1
T9	RESET_ACE_TO_PMU		RESET_IN2
T8	SOCHOT1_SOC_TO_PMU_L		RESET_IN3
R10	RESET_PMU_TO_APOLLO_R		RESET_OUT
R9	RESET_PMU_TO_SYSTEM_L		RESET*
F8	NUB_SPMI_SCLK_ATHENA		SCLK
F9	NUB_SPMI_SDATA_ATHENA		SDATA
F10	I2C_SMC_I2CM3_SCL_1V8		SCL
F11	I2C_SMC_I2CM3_SDA_1V8		SDA
			FORCE_SYNC
E12	PMU_SYNC		
E13	SYS_ALIVE		SYS_ALIVE
M8	GPIO_APOLLO_TO_PMU_SOC_IRQ_L		IRQ_IN*
N7	GPIO_PMU_TO_SOC_IRQ_L		IRQ*
D11	VCCMAIN_DROOP_PMU_TO_SOC_L_R		PRE_UVLO
E8	NC_FAULT_OUT_L		FAULT_OUT*
E10	PMU_REQUEST_DFU		REQUEST_DFU
E11	GPIO_PMU_TO_SYSTEM_ACTIVE_READY		ACTIVE_RDY
L11			ATM

Block groups: AMUX, GPIO, TDEV, OTHER, BUTTON, RESET, SERIAL, DROOP

C8340 100PF 5% 25V C0G-CERM 01005 — R8340 3.92K 0.1% 1/20W MF 0201 (CRITICAL)

R8331 10K 5% 1/32W MF 01005 — PP1V8_S3

NOTE: MAY NEED TO CHANGE XTAL CKT BASED ON CHARACTERIZATION

Y8300 32.768K-20PPM-12.5PF 2012-1 (CRITICAL) — C8316 18PF 5% 25V C0G-CERM 0201 (CRITICAL) — C8315 18PF 5% 25V C0G-CERM 0201

R79D1 33 1/32W 5% MF 01005 PLACE_NEAR=U8100.F9:20MM — NUB_SPMI_SDATA

R8305 0.00 0% 1/32W MF 01005

R83A0 4.7K 5% 1/32W MF 01005

BUTTON PULLUPS

PP1V8_ALWAYS, PP1V8_S3 — R839A 100K, R8395 100K, R8396 100K (5% 1/32W MF 01005) — GPIO_BTN_VOL_UP_L, GPIO_BTN_VOL_DOWN_L, GPIO_BTN_ONOFF_L

PLACE U8350 AND U8351 CLOSE TO T JUNCTION

THESE BUFFERS MIGHT NOT BE NEEDED FOR MLB. TBD.

C8302 0.01UF 10% 6.3V X5R 01005

PP1V8_S3, PP1V8_ALWAYS, PP1V8_EXT_SW1

R8372 100K (NOSTUFF), R8300 10K, R8301 10K, R8373 10K (NOSTUFF), R8370 10K (5% 1/32W MF 01005)

R8371 0.00 0% 1/32W MF 01005

VCCMAIN_DROOP_PMU_TO_SOC_L — VCCMAIN_DROOP_PMU_TO_SOC_L_R

SYS_ALIVE

RESET_PMU_TO_APOLLO_POTOMAC

GPIO_PMU_TO_CPU_TRIGGER_1

GPIO_PMU_TO_CPU_TRIGGER_0

R8315 0.00 0% 1/32W MF 01005 — ATHENA_CRASH

R8302 0.00 0% 1/32W MF 01005 NOSTUFF

PP1V8_EXT_SW1

R8309 10K, R8310 10K (5% 1/32W MF 01005)

R8304 0.00 0% 1/32W MF 01005 NOSTUFF

GPIO_PMU_TO_GPU_TRIGGER_1

GPIO_PMU_TO_GPU_TRIGGER_0

RESET_PMU_TO_APOLLO — R8316 0.00 0% 1/32W MF 01005 — RESET_PMU_TO_APOLLO_R

R8317 10K 5% 1/32W MF 01005 NOSTUFF

PP1V8_S3

R8341 10K, R8342 10K (5% 1/32W MF 01005)

GPIO_CPANEL_HALL_TO_PMU_IRQ_L

GPIO_APANEL_HALL_TO_PMU_IRQ_L

SYNC_MASTER=J317_MLB_B — SYNC_DATE=11/16/2018

PAGE TITLE

POWER: ATHENA (3/4)

ATHENA PMU (4/4)

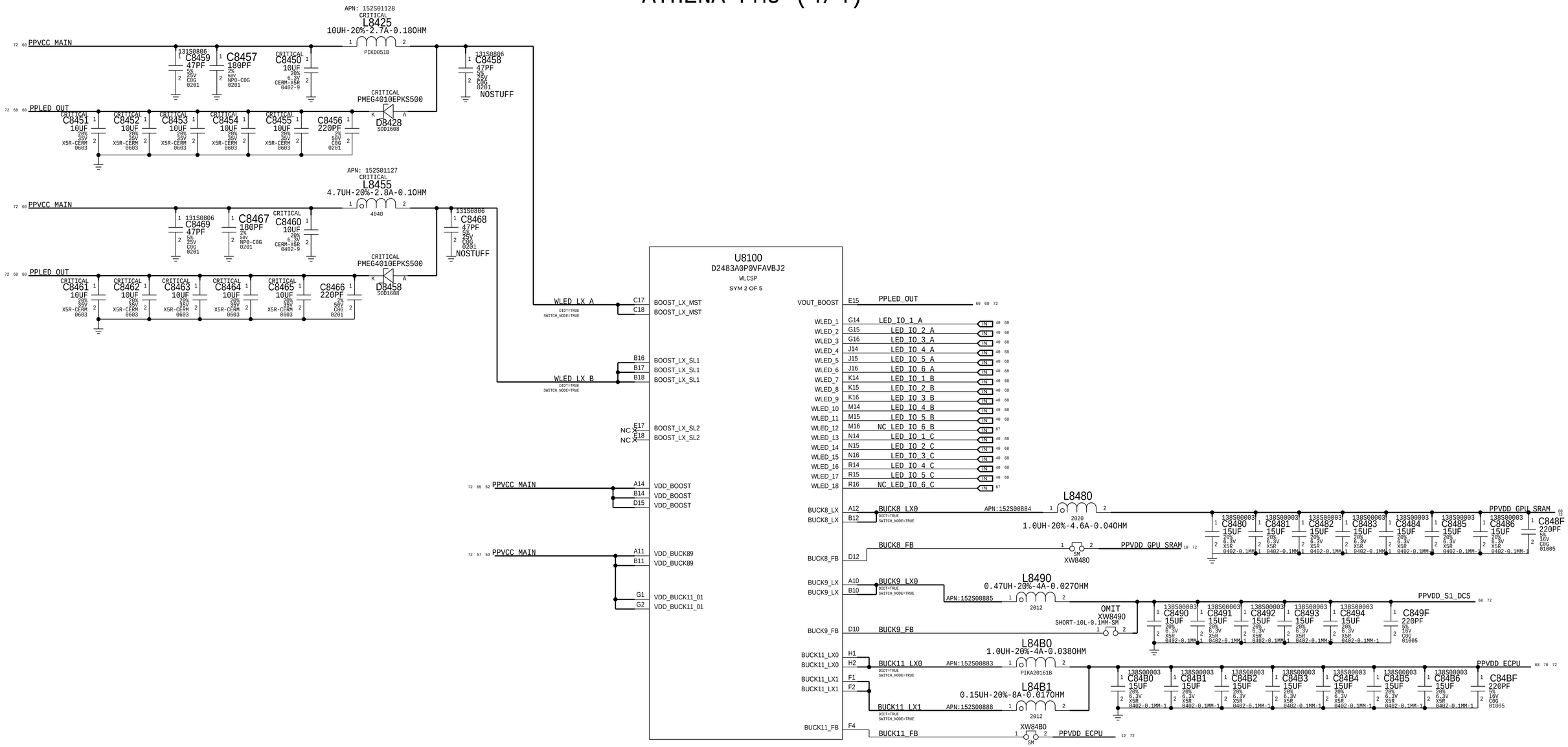

SYNC_MASTER=J317_MLB_B	SYNC_DATE=11/16/2018
PAGE TITLE	POWER: ATHENA (4/4)

POTOMAC

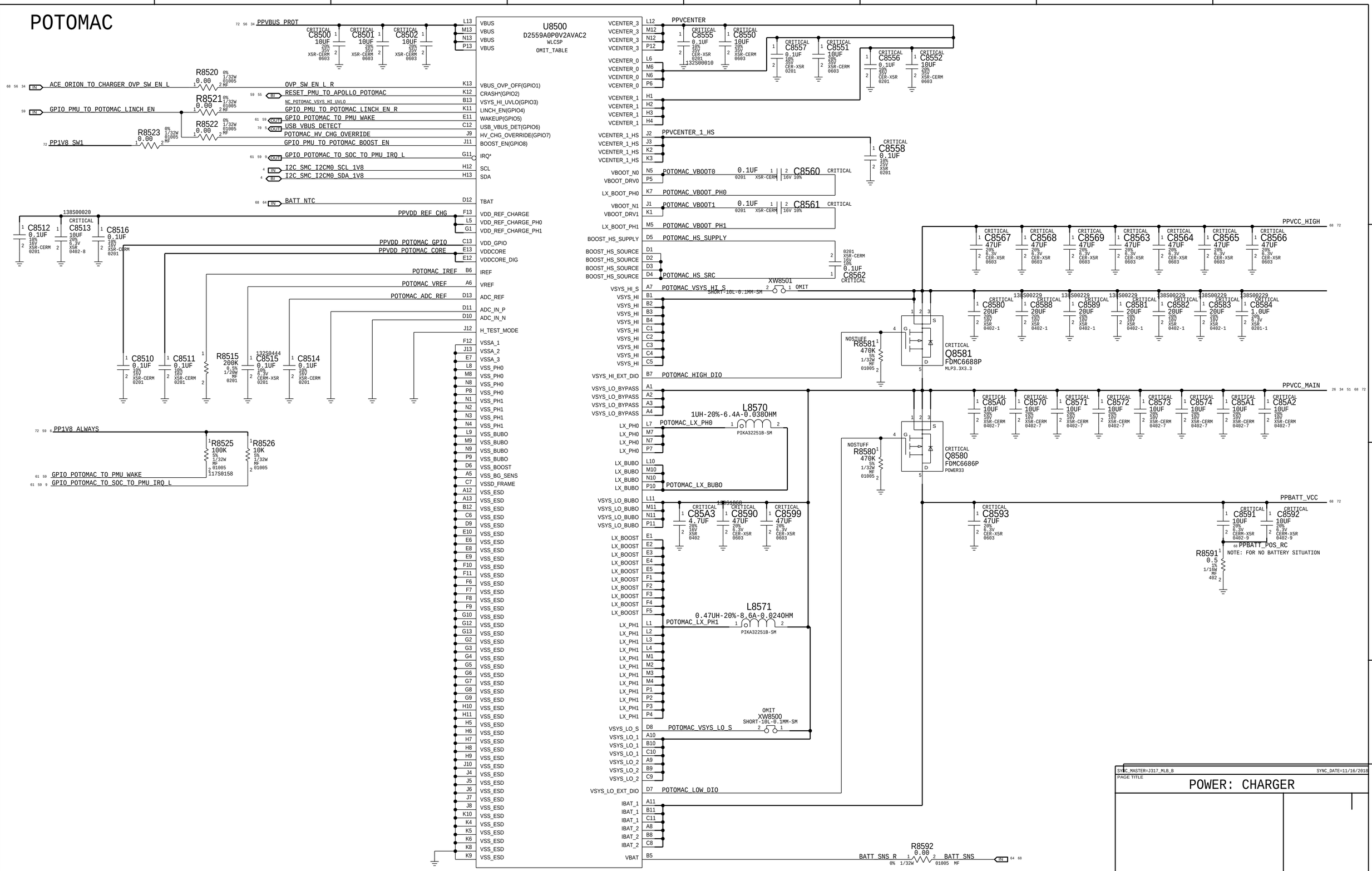
U8500
D2559A0P0V2AVAC2
WLCSP
OMIT_TABLE
PPVBUS_PROT
ACE ORION TO CHARGER OVP SW EN L
GPIO PMU TO POTOMAC LINCH EN
PP1V8 SW1
RESET PMU TO APOLLO POTOMAC
NC_POTOMAC_VSYS_HI_UVLO
GPIO PMU TO POTOMAC LINCH EN R
GPIO POTOMAC TO PMU WAKE
USB VBUS DETECT
POTOMAC HV CHG OVERRIDE
GPIO PMU TO POTOMAC BOOST EN
GPIO POTOMAC TO SOC TO PMU IRQ L
I2C SMC I2CM0 SCL 1V8
I2C SMC I2CM0 SDA 1V8
BATT NTC
PPVDD REF CHG
PPVDD POTOMAC GPIO
PPVDD POTOMAC CORE
POTOMAC IREF
POTOMAC VREF
POTOMAC ADC REF
PP1V8 ALWAYS
GPIO POTOMAC TO PMU WAKE
GPIO POTOMAC TO SOC TO PMU IRQ L
PPVCENTER
PPVCENTER_1_HS
POTOMAC VBOOT0
POTOMAC VBOOT PH0
POTOMAC VBOOT1
POTOMAC VBOOT PH1
POTOMAC HS SUPPLY
POTOMAC HS SRC
POTOMAC VSYS HI S
POTOMAC HIGH DIO
POTOMAC LX PH0
POTOMAC LX BUBO
POTOMAC LX PH1
POTOMAC VSYS LO S
POTOMAC LOW DIO
BATT SNS R
BATT SNS
PPVCC_HIGH
PPVCC_MAIN
PPBATT_VCC
PPBATT_POS_RC
NOTE: FOR NO BATTERY SITUATION
L8570
1UH-20%-6.4A-0.0380HM
PIKA32251B-SM
L8571
0.47UH-20%-8.6A-0.024OHM
PIKA32251B-SM
Q8581
FDMC6688P
MLP3.3X3.3
Q8580
FDMC6686P
POWER33
XW8501
XW8500
SYNC_MASTER=J317_MLB_B
SYNC_DATE=11/16/2018
PAGE TITLE
POWER: CHARGER

EXTERNAL POWER SWITCHES

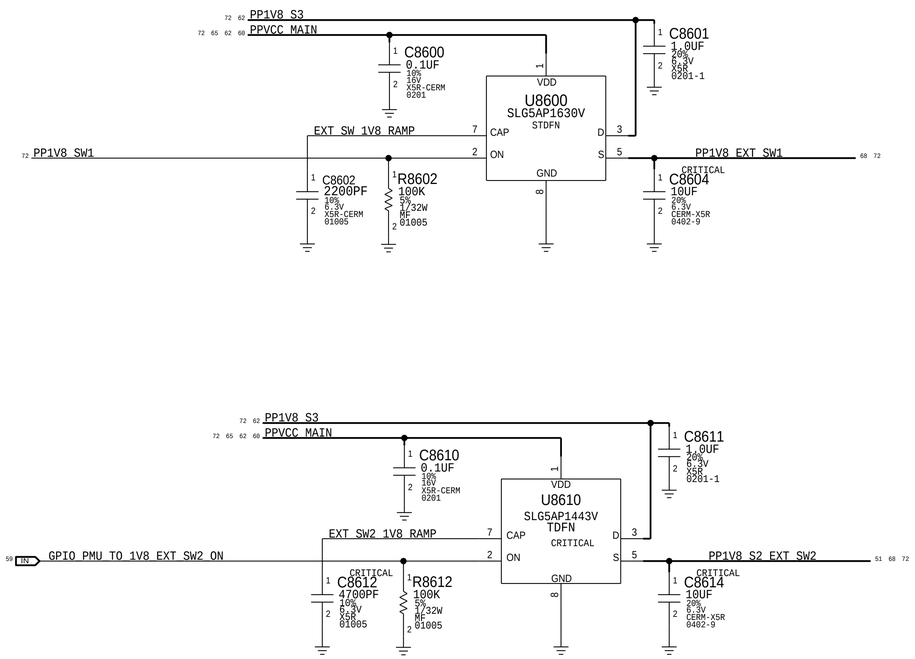

SYNC_MASTER=J421_P2_CHINA SYNC_DATE=05/13/2019

PAGE TITLE

POWER: EXTERNAL SWITCHES

SCORPIUS BOOST

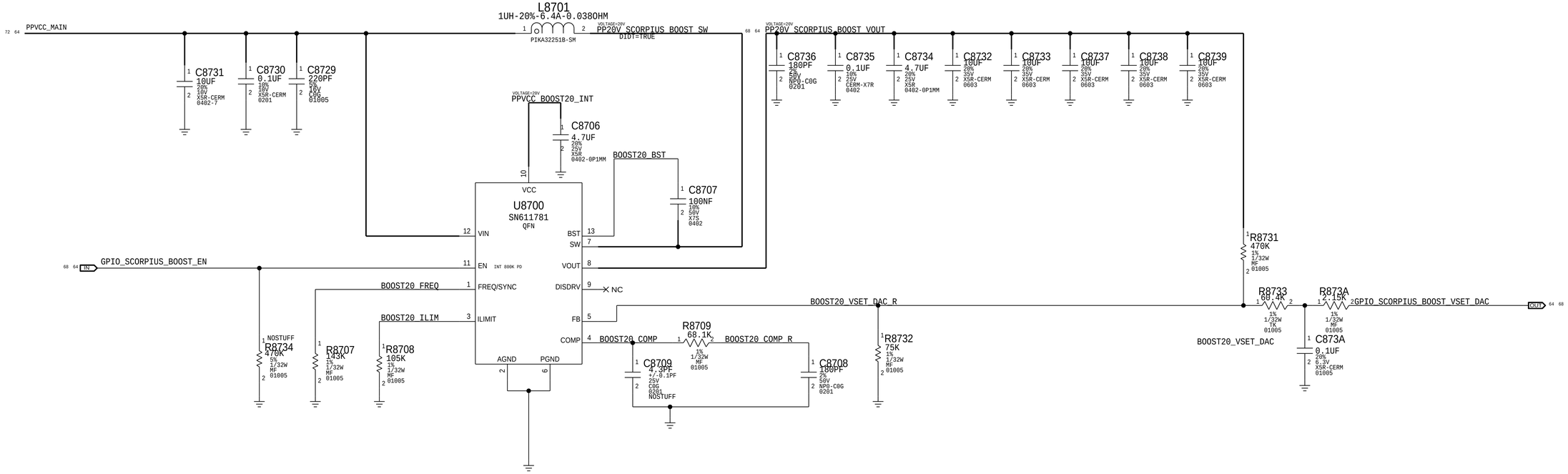

BELLATRIX BOOST

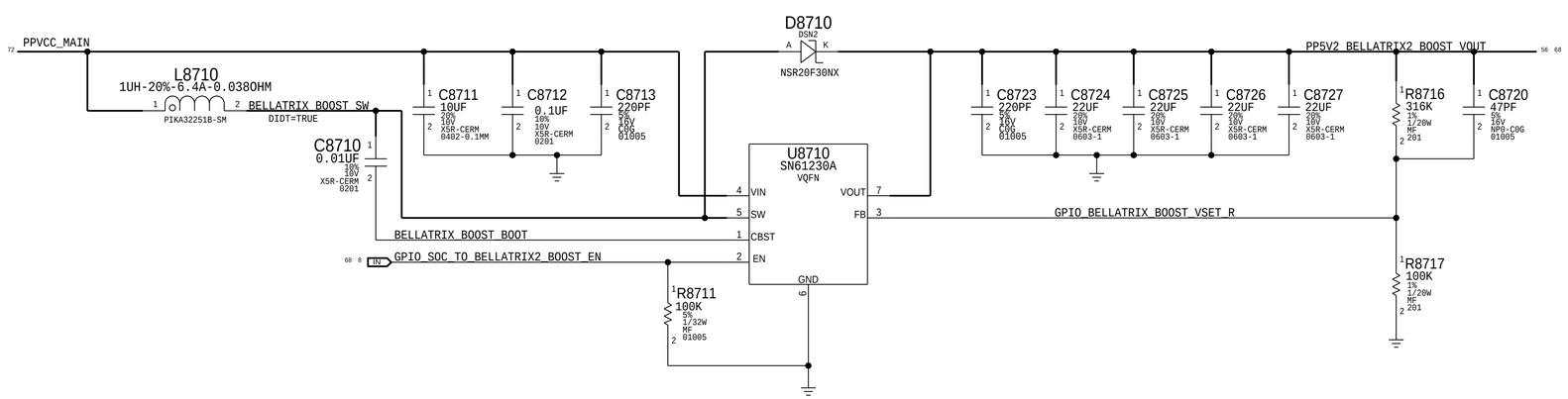

SYNC_MASTER=J421_P2_CHINA SYNC_DATE=05/13/2019

PAGE TITLE

POWER: SCORPIUS/BELLATRIX2 BOOSTS

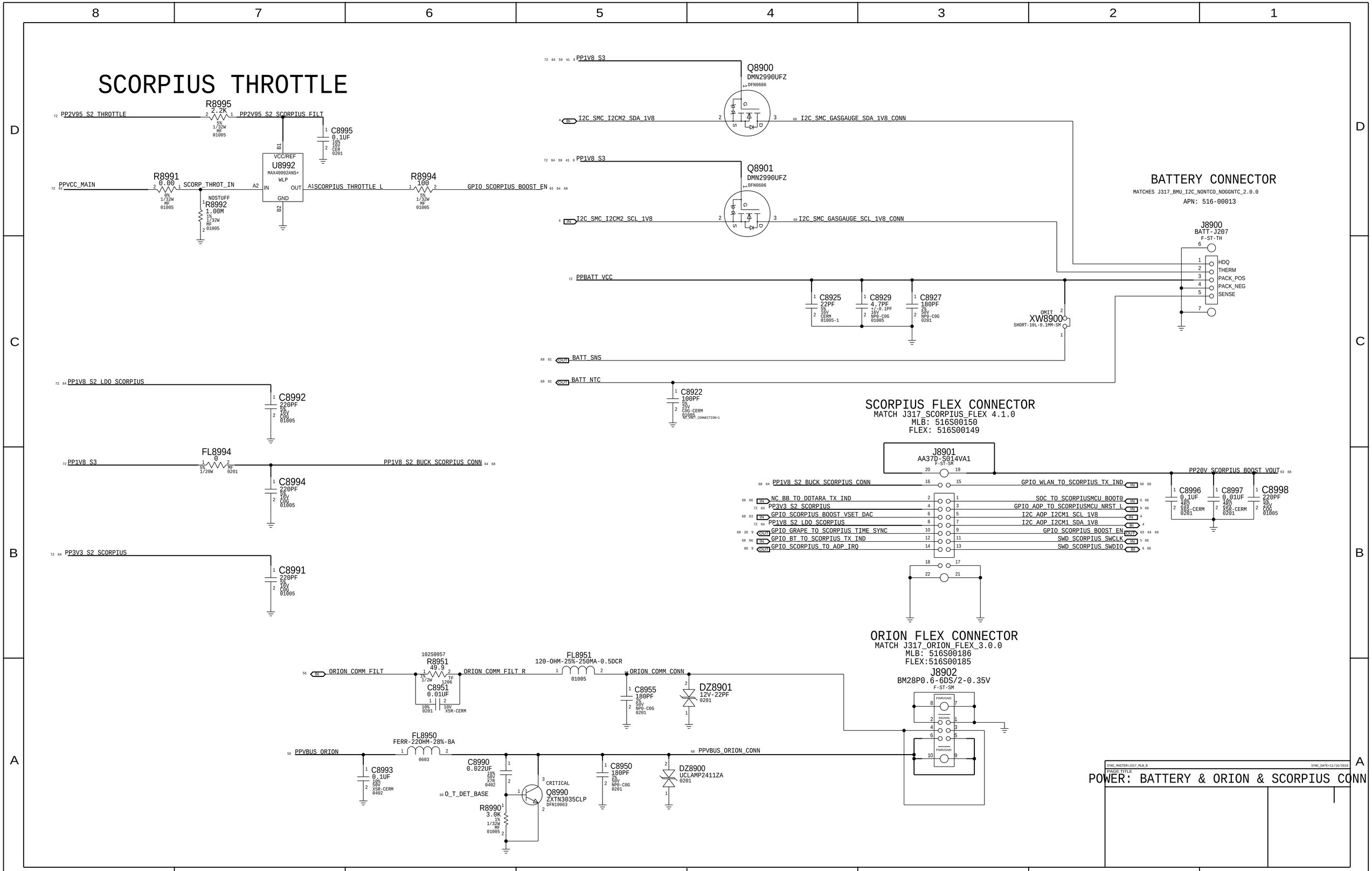
SCORPIUS THROTTLE
PP2V95_S2_THROTTLE
R8995 2.2K 5% 1/32W MF 01005
PP2V95_S2_SCORPIUS_FILT
C8995 0.1UF 10% 16V CER 0201
PPVCC_MAIN
R8991 0.00 0% 1/32W MF 01005
SCORP_THROT_IN
NOSTUFF R8992 1.00M 1% 1/32W MF 01005
VCC/REF
U8992 MAX40002ANS+ WLP
IN OUT GND
SCORPIUS_THROTTLE_L
R8994 100 5% 1/32W MF 01005
GPIO_SCORPIUS_BOOST_EN
PP1V8_S3
Q8900 DMN2990UFZ DFN0606
I2C_SMC_I2CM2_SDA_1V8
I2C_SMC_GASGAUGE_SDA_1V8_CONN
Q8901 DMN2990UFZ DFN0606
I2C_SMC_I2CM2_SCL_1V8
I2C_SMC_GASGAUGE_SCL_1V8_CONN
BATTERY CONNECTOR
MATCHES J317_BMU_I2C_NONTCO_NOGGNTC_2.0.0
APN: 516-00013
J8900 BATT-J207 F-ST-TH
HDQ
THERM
PACK_POS
PACK_NEG
SENSE
PPBATT_VCC
C8925 22PF 20% 16V CERM 01005-1
C8929 4.7PF +/-0.1PF 16V NP0-C0G 01005
C8927 180PF 2% 50V NP0-C0G 0201
OMIT XW8900 SHORT-10L-0.1MM-SM
BATT_SNS
BATT_NTC
C8922 100PF 5% 25V C0G-CERM 01005
SCORPIUS FLEX CONNECTOR
MATCH J317_SCORPIUS_FLEX 4.1.0
MLB: 516S00150
FLEX: 516S00149
PP1V8_S2_LDO_SCORPIUS
C8992 220PF 5% 16V C0G 01005
FL8994 0 5% 1/20W MF 0201
PP1V8_S3
PP1V8_S2_BUCK_SCORPIUS_CONN
C8994 220PF 5% 16V C0G 01005
PP3V3_S2_SCORPIUS
C8991 220PF 5% 16V C0G 01005
J8901 AA37D-S014VA1 F-ST-SM
PP1V8_S2_BUCK_SCORPIUS_CONN
NC_BB_TO_DOTARA_TX_IND
PP3V3_S2_SCORPIUS
GPIO_SCORPIUS_BOOST_VSET_DAC
PP1V8_S2_LDO_SCORPIUS
GPIO_GRAPE_TO_SCORPIUS_TIME_SYNC
GPIO_BT_TO_SCORPIUS_TX_IND
GPIO_SCORPIUS_TO_AOP_IRQ
GPIO_WLAN_TO_SCORPIUS_TX_IND
SOC_TO_SCORPIUSMCU_BOOT0
GPIO_AOP_TO_SCORPIUSMCU_NRST_L
I2C_AOP_I2CM1_SCL_1V8
I2C_AOP_I2CM1_SDA_1V8
GPIO_SCORPIUS_BOOST_EN
SWD_SCORPIUS_SWCLK
SWD_SCORPIUS_SWDIO
PP20V_SCORPIUS_BOOST_VOUT
C8996 0.1UF 10% 16V X5S-CERM 0201
C8997 0.01UF 10% 25V X5R-CERM 0201
C8998 220PF 5% 25V C0G 01005
ORION FLEX CONNECTOR
MATCH J317_ORION_FLEX_3.0.0
MLB: 516S00186
FLEX:516S00185
J8902 BM28P0.6-6DS/2-0.35V F-ST-SM
PWR/GND
SIGNAL
ORION_COMM_FILT
102S0957 R8951 49.9 1% 1/2W TF 1206
ORION_COMM_FILT_R
C8951 0.01UF 10% 10V 0201 X5R-CERM
FL8951 120-OHM-25%-250MA-0.5DCR 01005
ORION_COMM_CONN
C8955 180PF 2% 50V NP0-C0G 0201
DZ8901 12V-22PF 0201
PPVBUS_ORION
FL8950 FERR-220OHM-28%-8A 0603
C8993 0.1UF 10% 50V X5R-CERM 0402
C8990 0.022UF 10% 50V X7R 0402
O_T_DET_BASE
R8990 3.0K 1% 1/32W MF 01005
Q8990 ZXTN3035CLP DFN10063
CRITICAL
C8950 180PF 2% 50V NP0-C0G 0201
PPVBUS_ORION_CONN
DZ8900 UCLAMP2411ZA 0201
SYNC_MASTER=J317_MLB_B
SYNC_DATE=11/16/2018
PAGE TITLE
POWER: BATTERY & ORION & SCORPIUS CONN

DEBUG RESET ACCESS

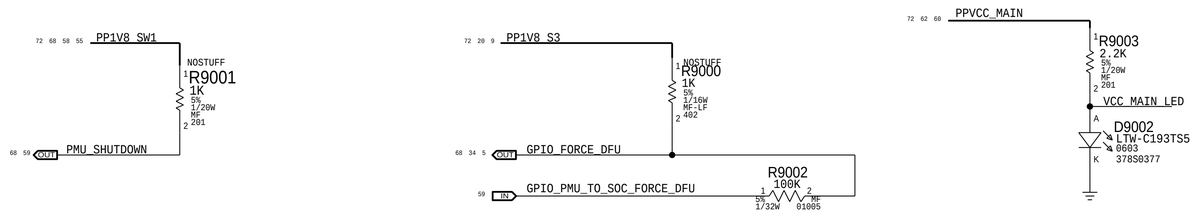

SYNC_MASTER=J421_P2_CHINA SYNC_DATE=05/13/2019

PAGE TITLE

SOC: DEBUG

CELLULAR AND WLAN/BT ALIASES

BASEBAND

SOC/AOP/PMU GPIOS

6	OUT	NC_BB_TO_AP_RESET_DETECT_1V8_L	MAKE_BASE=TRUE	NC_BB_TO_AP_RESET_DETECT_1V8_L
8	IN	NC_AP_TO_BB_COREDUMP_TRIG_1V8	MAKE_BASE=TRUE	NC_AP_TO_BB_COREDUMP_TRIG_1V8
9	IN	NC_SWD_AOP_TO_MANY_SWDCLK	MAKE_BASE=TRUE	NC_SWD_AOP_TO_MANY_SWDCLK
66 9	BI	NC_SWD_AOP_BI_BB_SWDIO	MAKE_BASE=TRUE	NC_SWD_AOP_BI_BB_SWDIO
55	IN	NC_APPMU_TO_BBPMU_ON	MAKE_BASE=TRUE	NC_APPMU_TO_BBPMU_ON
59	OUT	NC_PCIE_BB_TO_APPMU_WAKE_1V8_L	MAKE_BASE=TRUE	NC_PCIE_BB_TO_APPMU_WAKE_1V8_L
9	IN	NC_UART_AOP_TO_BB_TXD	MAKE_BASE=TRUE	NC_UART_AOP_TO_BB_TXD
9	OUT	NC_UART_BB_TO_AOP_TXD	MAKE_BASE=TRUE	NC_UART_BB_TO_AOP_TXD
9	OUT	NC_AOP_TO_BBPMU_FORCE_PWM	MAKE_BASE=TRUE	NC_AOP_TO_BBPMU_FORCE_PWM
68 64	OUT	NC_BB_TO_DOTARA_TX_IND	MAKE_BASE=TRUE	NC_BB_TO_DOTARA_TX_IND
46 40 7	IN	NC_AP_TO_BBPMU_FORCE_PWM	MAKE_BASE=TRUE	NC_AP_TO_BBPMU_FORCE_PWM

PCIE

8	IN	NC_90_PCIE_AP_TO_BB_REFCLK_P	MAKE_BASE=TRUE	NC_90_PCIE_AP_TO_BB_REFCLK_P
8	IN	NC_90_PCIE_AP_TO_BB_REFCLK_N	MAKE_BASE=TRUE	NC_90_PCIE_AP_TO_BB_REFCLK_N
8	OUT	NC_PCIE_AP_BI_BB_CLKREQ_1V8_L	MAKE_BASE=TRUE	NC_PCIE_AP_BI_BB_CLKREQ_1V8_L
66 8	IN	NC_PCIE_AP_TO_BB_PERST_1V8_L	MAKE_BASE=TRUE	NC_PCIE_AP_TO_BB_PERST_1V8_L
8	IN	NC_90_PCIE_AP_TO_BB_TX_P	MAKE_BASE=TRUE	NC_90_PCIE_AP_TO_BB_TX_P
8	IN	NC_90_PCIE_AP_TO_BB_TX_N	MAKE_BASE=TRUE	NC_90_PCIE_AP_TO_BB_TX_N
8	OUT	NC_90_PCIE_BB_TO_AP_TX_P	MAKE_BASE=TRUE	NC_90_PCIE_BB_TO_AP_TX_P
8	OUT	NC_90_PCIE_BB_TO_AP_TX_N	MAKE_BASE=TRUE	NC_90_PCIE_BB_TO_AP_TX_N

I2S

6	IN	I2S0_SOC_TO_BB_BCLK	MAKE_BASE=TRUE	I2S0_SOC_TO_BB_BCLK
6	OUT	I2S0_BB_TO_SOC_DIN	MAKE_BASE=TRUE	I2S0_BB_TO_SOC_DIN
6	IN	I2S0_SOC_TO_BB_DOUT	MAKE_BASE=TRUE	I2S0_SOC_TO_BB_DOUT
6	IN	I2S0_SOC_TO_BB_LRCK	MAKE_BASE=TRUE	I2S0_SOC_TO_BB_LRCK
25	OUT	NC_BB_TO_AP_GSM_TXBURST	MAKE_BASE=TRUE	NC_BB_TO_AP_GSM_TXBURST
42	IN	NC_UART_BB_TO_WLAN_COEX_1V8	MAKE_BASE=TRUE	NC_UART_BB_TO_WLAN_COEX_1V8
42	OUT	NC_UART_WLAN_TO_BB_COEX_1V8	MAKE_BASE=TRUE	NC_UART_WLAN_TO_BB_COEX_1V8

BASEBAND SWD

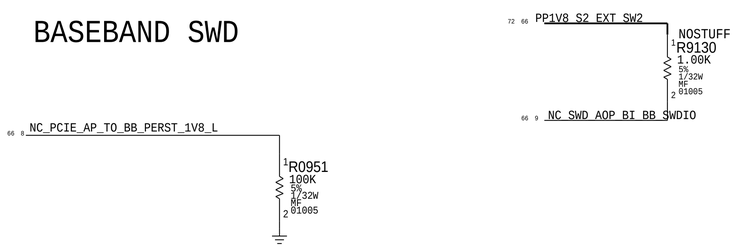

WLAN

POWER

72		PPVCC_MAIN		PPVCC_MAIN	42 43 66
72 66		PP1V8_S2_EXT_SW2		PP1V8_S2_EXT_SW2	43
72 66		PP1V8_S2_EXT_SW2		PP1V8_S2_EXT_SW2	42

GPIOS

55	IN	GPIO_APOLLO_TO_WLAN_REG_ON	MAKE_BASE=TRUE	GPIO_APOLLO_TO_WLAN_REG_ON	OUT 42
59	OUT	GPIO_WLAN_TO_PMU_HOST_WAKE	MAKE_BASE=TRUE	GPIO_WLAN_TO_PMU_HOST_WAKE	IN 42
68 59	IN	CLK_PMU_TO_WLAN_32K	MAKE_BASE=TRUE	CLK_PMU_TO_WLAN_32K	OUT 42
9	IN	GPIO_AOP_TO_WLAN_CONTEXT_A	MAKE_BASE=TRUE	GPIO_AOP_TO_WLAN_CONTEXT_A	OUT 42
9	IN	GPIO_AOP_TO_WLAN_CONTEXT_B	MAKE_BASE=TRUE	GPIO_AOP_TO_WLAN_CONTEXT_B	OUT 42
5	OUT	GPIO_WLAN_TO_SOC_TIME_SYNC	MAKE_BASE=TRUE	GPIO_WLAN_TO_SOC_TIME_SYNC	IN 42
68 64	OUT	GPIO_WLAN_TO_SCORPIUS_TX_IND	MAKE_BASE=TRUE	GPIO_WLAN_TO_SCORPIUS_TX_IND	IN 42

SWD

6	OUT	SWD_WLAN_SWCLK	MAKE_BASE=TRUE	SWD_WLAN_SWCLK	IN 42
6	BI	SWD_WLAN_SWDIO	MAKE_BASE=TRUE	SWD_WLAN_SWDIO	BI 42

PCIE

70 8	IN	PCIE_SOC_TO_WLAN_REFCLK_P	MAKE_BASE=TRUE	PCIE_SOC_TO_WLAN_REFCLK_P	OUT 42
70 8	IN	PCIE_SOC_TO_WLAN_REFCLK_N	MAKE_BASE=TRUE	PCIE_SOC_TO_WLAN_REFCLK_N	OUT 42
70 8	IN	PCIE_SOC_TO_WLAN_TX_P	MAKE_BASE=TRUE	PCIE_SOC_TO_WLAN_TX_P	OUT 42
70 8	IN	PCIE_SOC_TO_WLAN_TX_N	MAKE_BASE=TRUE	PCIE_SOC_TO_WLAN_TX_N	OUT 42
66		PCIE_WLAN_TO_SOC_TX_C_P	MAKE_BASE=TRUE	PCIE_WLAN_TO_SOC_TX_C_P	IN 42
66		PCIE_WLAN_TO_SOC_TX_C_N	MAKE_BASE=TRUE	PCIE_WLAN_TO_SOC_TX_C_N	IN 42
8	OUT	PCIE_WLAN_TO_SOC_CLKREQ_L	MAKE_BASE=TRUE	PCIE_WLAN_TO_SOC_CLKREQ_L	IN 42
8	IN	PCIE_SOC_TO_WLAN_RESET_L	MAKE_BASE=TRUE	PCIE_SOC_TO_WLAN_RESET_L	OUT 42

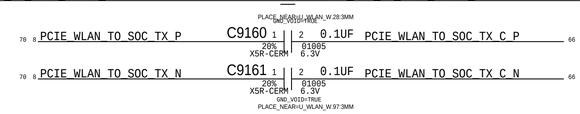

BLUETOOTH

SOC GPIOS

		NC_I2C_BT_TO_SE_SCL	MAKE_BASE=TRUE	NC_I2C_BT_TO_SE_SCL	IN 42
		NC_I2C_BT_TO_SE_SDA	MAKE_BASE=TRUE	NC_I2C_BT_TO_SE_SDA	BI 42
70 66 42 20 19 6	IN	GPIO_SOC_TO_BT_TO_GRAPE_TS_SYNC	MAKE_BASE=TRUE	GPIO_SOC_TO_BT_TO_GRAPE_TS_SYNC	OUT 6 19 20 42 66 70
66 42 19	IN	GPIO_TOUCH_TO_BT_SYNC	MAKE_BASE=TRUE	GPIO_TOUCH_TO_BT_SYNC	OUT 19 42 66
68 64	OUT	GPIO_BT_TO_SCORPIUS_TX_IND	MAKE_BASE=TRUE	GPIO_BT_TO_SCORPIUS_TX_IND	IN 42
6	OUT	BT_TO_SOC_TIME_SYNC	MAKE_BASE=TRUE	BT_TO_SOC_TIME_SYNC	IN 42

WLAN/BT SPMI

- REMOVED PHYSICAL CONNECTION FOR WIFI SPMI

42	OUT	SPMI_AOP_TO_RADIOS_CLK	1 PP	PP9108 P2MM-NSM SM OMIT
42	BI	SPMI_AOP_TO_RADIOS_DATA	1 PP	PP9109 P2MM-NSM SM OMIT

ROTTERDAM(VENUS)

POWER

72		PPVCC_MAIN		PPVCC_MAIN	42 43 66
72		PP1V8_S2_EXT_SW2		PP1V8_S2_EXT_SW2	

GPIOS

66 51 6	IN	GPIO_SOC_TO_ROTTERDAM_DEV_WAKE	MAKE_BASE=TRUE	GPIO_SOC_TO_ROTTERDAM_DEV_WAKE	OUT 6 51 66
66 51 6	IN	GPIO_SOC_TO_ROTTERDAM_DWLD_REQ	MAKE_BASE=TRUE	GPIO_SOC_TO_ROTTERDAM_DWLD_REQ	OUT 6 51 66
66 59 51	IN	GPIO_PMU_TO_ROTTERDAM_EN	MAKE_BASE=TRUE	GPIO_PMU_TO_ROTTERDAM_EN	OUT 51 59 66

UART

66 51 6	IN	UART_SOC_TO_ROTTERDAM_TX	MAKE_BASE=TRUE	UART_SOC_TO_ROTTERDAM_TX	OUT 6 51 66
66 51 6	OUT	UART_ROTTERDAM_TO_SOC_TX	MAKE_BASE=TRUE	UART_ROTTERDAM_TO_SOC_TX	IN 6 51 66
66 51 6	IN	UART_SOC_TO_ROTTERDAM_RTS_L	MAKE_BASE=TRUE	UART_SOC_TO_ROTTERDAM_RTS_L	OUT 6 51 66
66 51 6	OUT	UART_ROTTERDAM_TO_SOC_RTS_L	MAKE_BASE=TRUE	UART_ROTTERDAM_TO_SOC_RTS_L	IN 6 51 66

UWB - NC

COEX

NC_R1_TO_WLAN_COEX	MAKE_BASE=TRUE	NC_R1_TO_WLAN_COEX	OUT 42
NC_WLAN_TO_R1_COEX	MAKE_BASE=TRUE	NC_WLAN_TO_R1_COEX	IN 42
NC_BT_TO_R1_WAKE	MAKE_BASE=TRUE	NC_BT_TO_R1_WAKE	IN 42
NC_BT_TO_R1_TIME_SYNC	MAKE_BASE=TRUE	NC_BT_TO_R1_TIME_SYNC	IN 42
NC_I2C_R1_TO_NFC_SCL	MAKE_BASE=TRUE	NC_I2C_R1_TO_NFC_SCL	OUT 51
NC_I2C_R1_TO_NFC_SDA	MAKE_BASE=TRUE	NC_I2C_R1_TO_NFC_SDA	BI 51

RF NTC

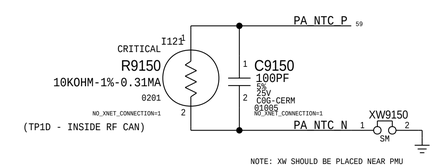

NOTE: XW SHOULD BE PLACED NEAR PMU

SYNC_MASTER=J317_MLB_B SYNC_DATE=11/16/2018

PAGE TITLE

ALIASES: BB/WLAN/BT

CONFIDENTIAL AND PROPRIETARY APPLE SYSTEM DESIGN. FOR REFERENCE PURPOSE ONLY - NOT A CHANGE REQUEST

J417/J420 DIFF NET ALIASES

LPDP_TX/BACKLIGHT

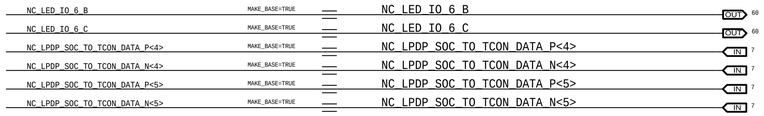

LPDP/USB2 CMC REPLACEMENT

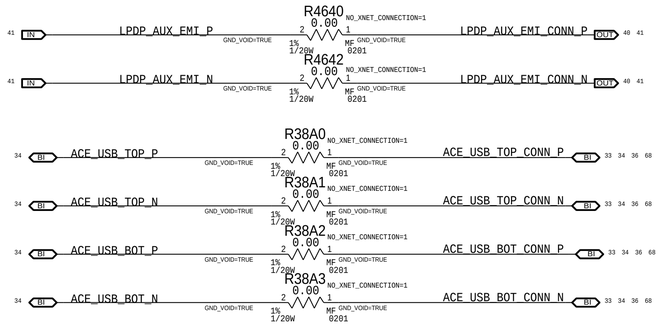

SYNC_MASTER=J317_MLB_B SYNC_DATE=11/16/2018

PAGE TITLE

ALIASES: J417/J420 DIFF

CONFIDENTIAL AND PROPRIETARY APPLE SYSTEM DESIGN. FOR REFERENCE PURPOSE ONLY - NOT A CHANGE REQUEST

SMT TEST FIXTURE TP

POWER - BUCKS/SWITCHES

TP9301	PPVDD_CPU		57 72
TP9302	PPVDD_GPU		57 72
TP9303	PPVDD_S1_SOC		57 70 72
TP9304	PP1V8_S3		57 72
TP9305	PP1V8_SW1		55 58 65 72
TP9306	PP1V8_S2_GRAPE		58 72
TP9307	PP1V8_SW1_CAM		7 54 72
TP9308	PP1V8_S3_SW3		54 72
TP9309	PP1V8_EXT_SW1		62 72
TP930A	PP1V8_S2_EXT_SW2		51 62 72
TP930C	PP1V1_S3		53 72
TP930E	PPVDD_S1_FIXED		53 70 72
TP930F	PP2V63_OTP		53 72
TP930G	PPVDD_CPU_SRAM		57 72
TP930H	PPVDD_GPU_SRAM		60 72
TP930I	PPVDD_S1_DCS		60 72
TP930J	PPVDD_S1_QL		53 72
TP930K	PPVDD_ECPU		60 70 72
TP930L	PP1V4_CAMERA		53 72

POWER - LDOS

TP9311	PP3V3_S2_ACE		58 72
TP9313	PP2V95_S2_THROTTLE		58 72
TP9314	PP3V0_ALS		54 72
TP9315	PP3V3_S2_REDRIVER		58 72
TP9317	PP3V3_USB		58 72
TP9318	PP3V3_S2_SCORPIUS		58 72
TP9319	PP1V215_FRONT_CAM		54 72
TP931A	PP0V9_NAND		54 72
TP931B	ATHENA_LDO11_SPARE		58 72
TP931C	PP3V3_S2_GRAPE		58 72
TP931D	PP1V2_SOC		58 72
TP931E	PP0V775_S2_AOP		54 72
TP931F	PP1V8_S2_LDO_SCORPIUS		58 72
TP931G			
TP931I	PP2V90_FRONT_CAM		54 72
TP931M	PP1V215_PEARL		54 72
TP931N	PP2V85_PEARL		54 72
TP931O	PP3V1_PEARL		54 72
TP931P	APOLLO_LDO26_SPARE		54 72

POWER - OTHER

TP9340	PPVCENTER		61
TP9341	PPVBUS_PROT		72
TP9342	PPVCC_HIGH		61 68 72
TP9343	PP1V8_ALWAYS		58 72
TP9344	PPBATT_VCC		61 68 72
TP9345	PPLED_OUT		60 72
TP9347	PPVCC_MAIN		26 34 51 61 68 72
TP9348	PPBATT_POS_RC		61
TP9349	PPVBUS_USB_EMI		34 36 56 68
TP934A	PP1V2_GRAPE_BUCK_EXT		19 20

POWER - DISPLAY

TP9360	PPVCC_MAIN_LCD_SW_CONN		40 41
TP9361	PPVCC_MAIN_LCD_SW		41

POWER - BACKLIGHT

TP9369	PPLED_BACK_REG		40 41 68
TP9370	PPLED_BACK_REG		40 41 68
TP9371	PPLED_BACK_REG		40 41 68
TP9372	LED_IO_1_A		40 60
TP9373	LED_IO_2_A		40 60
TP9374	LED_IO_3_A		40 60
TP9375	LED_IO_4_A		40 60
TP9376	LED_IO_5_A		40 60
TP9377	LED_IO_6_A		40 60
TP937A	LED_IO_1_B		40 60
TP937B	LED_IO_2_B		40 60
TP937C	LED_IO_3_B		40 60
TP937D	LED_IO_4_B		40 60
TP937E	LED_IO_5_B		40 60
TP937H	LED_IO_1_C		40 60
TP937I	LED_IO_2_C		40 60
TP937J	LED_IO_3_C		40 60
TP937K	LED_IO_4_C		40 60
TP937L	LED_IO_5_C		40 60

BATTERY

TP9381	I2C_SMC_GASGAUGE_SCL_1V8_CONN		64
TP9382	BATT_SNS		61 64
TP9383	I2C_SMC_GASGAUGE_SDA_1V8_CONN		64
TP9384	BATT_NTC		61 64

PMU - MISC

TP93A3	PMU_TCAL		59
TP93A5	BOARD_TEMP2_P		59
TP93A6	BOARD_TEMP3_P		59
TP93A7	BOARD_TEMP4_P		59
TP93A8	BOARD_TEMP5_P		59
TP93A9	BOARD_TEMP6_P		59
TP93B0	BOARD_TEMP7_P		59
TP93B1	BOARD_TEMP8_P		59
TP93B4	TPT_APOLLO_AMUX_AY		55
TP93B4	TP_AMUX_AY		59
TP93B5	TP_AMUX_BY		59
TP93B9	GPIO_PMU_TO_CPU_TRIGGER_0		6 59
TP93BA	GPIO_PMU_TO_CPU_TRIGGER_1		6 59
TP93BB	VCCMAIN_DROOP_PMU_TO_SOC_L		6 59
TP93BC	SOCHOT1_SOC_TO_PMU_L		6 59
TP93BD	PMU_SHUTDOWN		59 65
TP93BE	GPIO_PMU_TO_GPU_TRIGGER_0		6 59
TP93BF	GPIO_PMU_TO_GPU_TRIGGER_1		6 59
TP93BH	BOARD_TEMP2A_P		55
TP93BK	GPIO_PMU_TO_APOLLO_LDO10_ON		55 59
TP93BL	GPIO_PMU_TO_APOLLO_BUCK4_ON		55 59

SOC - JTAG/RESET

TP93C1	JTAG_SOC_SEL		4 9
TP93C2	JTAG_SOC_TCK		9 34
TP93C3	JTAG_SOC_TMS		9 34
TP93C4	TP_JTAG_SOC_TDI		9
TP93C5	TP_JTAG_SOC_TRST_L		4 9
TP93C6	TP_JTAG_SOC_TDO		9
TP93C7	SOC_TESTMODE		4 5
TP93C8	RESET_PMU_TO_SYSTEM_L		5 9 59
TP93C9	GPIO_FORCE_DFU		5 34 65
TP93CA	SOC_TO_ACE_DFU_STATUS		5 34
TP93CB	TST_CLKOUT		9
TP93CC	GPIO_PMU_TO_SYSTEM_ACTIVE_READY		5 34 59

SOC - UART

TP93D0	UART_SOC_TO_DEBUG_TX		6 34
TP93D1	UART_DEBUG_TO_SOC_TX		6 34

SOC - USB

TP93DA	USB_SOC_P	PLACE_NEAR=U3800.H19:6MM	5 34
TP93DB	USB_SOC_N	PLACE_NEAR=U3800.H21:6MM	5 34

USBC - CONN

TP93D4	TRANS_DET_BASE		33
TP93D5	PPVBUS_USB_CONN		33 36 68
TP93D6	ACE_CC1		33 34 36
TP93D7	ACE_CC2		33 34 36
TP93D8	ACE_USB_TOP_CONN_N		33 34 36 67
TP93D9	ACE_USB_TOP_CONN_P		33 34 36 67
TP93E0	ACE_USB_BOT_CONN_N		33 34 36 67
TP93E1	ACE_USB_BOT_CONN_P		33 34 36 67
TP93EB	PPVBUS_USB_EMI		34 36 56 68

ACE

TP93R1	PP5V2_ACE_BOOST_OUT		32 34
TP93R2	PP3V3_ACE_LDO		34 35
TP93R4	ACE_SPI_CLK_R		34
TP93R5	ACE_SPI_CS_R_L		34
TP93R6	ACE_SPI_MOSI_R		34
TP93R9	ACE_SPI_MISO_R		34
TP93R8	ACE_SBU1_CONN		33 34 36
TP93R9	ACE_SBU2_CONN		33 34 36
TP93RU	GPIO_ACE_TO_SOC_IRQ_L		6 34
TP93RV	RESET_ACE_TO_PMU		34 59
TP93RW	ACE_TO_BOOST_EN		32 34
TP93R2	ACE_HRESET		34
TP93RQ	ACE_ORION_TO_CHARGER_OVP_SW_EN_L		34 56 61
TP93R3	GPIO_ACE_TO_SMC_IRQ_L		9 34

ORION

TP93E2	PPVBUS_ORION_RVP		56
TP93E3	PPVBUS_ORION_CONN		64 68
TP93E4	ORION_COMM_CONN		64
TP93E5	GPIO_ORION_TO_AOP_IRQ		9 56
TP93E8	PP5V2_BELLATRIX2_BOOST_VOUT		56 63
TP93E9	GPIO_SOC_TO_BELLATRIX2_BOOST_EN		8 63
TP93EA	PP1V8_INT_ORION		56
TP93E9	ACE_TO_BELLATRIX_ACC_PWR_EN_L		34 56
TP93ED	BELLATRIX_TO_ACE_ACC_PWR_PRESENT_L		34 56
TP93EN	O_T_DET_BASE		64

SCORPIUS

TP93ER	PP20V_SCORPIUS_BOOST_VOUT		63 64 68
TP93EA	PP20V_SCORPIUS_BOOST_VOUT		63 64 68
TP93EC	GPIO_SCORPIUS_BOOST_EN		63 64
TP93EE	GPIO_SCORPIUS_BOOST_VSET_DAC		63 64
TP93EF	GPIO_AOP_TO_SCORPIUSMCU_NRST_L		9 64
TP93EG	GPIO_GRAPE_TO_SCORPIUS_TIME_SYNC		9 20 64
TP93EI	SWD_SCORPIUS_SWCLK		5 64
TP93EJ	SWD_SCORPIUS_SWDIO		6 64
TP93EL	GPIO_SCORPIUS_TO_AOP_IRQ		9 64
TP93EM	SOC_TO_SCORPIUSMCU_BOOT0		6 64
TP93EO	PP1V8_S2_BUCK_SCORPIUS_CONN		64
TP93EP	GPIO_BT_TO_SCORPIUS_TX_IND		64 66
TP93EQ	GPIO_WLAN_TO_SCORPIUS_TX_IND		64 66

AUDIO - SEE SPKR AMP PAGES FOR MORE

TP93E8	PPV_BST_AUDIO		26 28 29 30 31 68
TP93E9	PPV_BST_AUDIO		26 28 29 30 31 68
TP93EA	GPIO_SPKRAMP_TO_SOC_IRQ_L		6 28 29 30 31
TP93FB	ARDEE_SYNC		28 29 30 31

POWER - SENSORS

TP93G0	PP1V8_S2_KOBOL_FILT		18
TP93G2	PP1V8_PHOS_FILT		18
TP93G4	PP1V8_S2_MOLY_CMPS_CONN		18

BUTTONS

TP93G5	GPIO_BTN_ONOFF_L_CONN		23
TP93G6	GPIO_BTN_VOL_UP_L_CONN		23
TP93G7	GPIO_BTN_VOL_DOWN_L_CONN		23

SOC I2C

TP93G8	I2C0_SCL_1V8		4 6
TP93G9	I2C0_SDA_1V8		4 6
TP93GA	I2C1_SCL_1V8		4 6
TP93GB	I2C1_SDA_1V8		4 6
TP93GC	I2C2_SCL_1V8		4 6
TP93GD	I2C2_SDA_1V8		4 6
TP93GG	I2C_AOP_I2CM0_SCL_1V8		4 9
TP93GH	I2C_AOP_I2CM0_SDA_1V8		4 9
TP93GJ	I2C_AOP_I2CM1_SCL_1V8		4 9
TP93GK	I2C_AOP_I2CM1_SDA_1V8		4 9
TP93GL	I2C_SMC_I2CM0_SCL_1V8		4 9
TP93GM	I2C_SMC_I2CM0_SDA_1V8		4 9
TP93GN	I2C_SMC_I2CM1_SCL_1V8		4 9
TP93GP	I2C_SMC_I2CM1_SDA_1V8		4 9
TP93GQ	I2C_SMC_I2CM2_SCL_1V8		4 9
TP93GR	I2C_SMC_I2CM2_SDA_1V8		4 9
TP93GS	I2C_SMC_I2CM3_SCL_1V8		4 9
TP93GT	I2C_SMC_I2CM3_SDA_1V8		4 9
TP93GZ	USB_VBUS_DETECT_R		5 32

SOC - BELLATRIX2 UART

TP93N8	UART_SOC_TO_BELLATRIX2_TX		6 56
TP93N9	UART_BELLATRIX2_TO_SOC_TX		6 56

SOC - GND

TP93NA	TPT_VSS_SENSE		14
TP93NB	TPT_VSS_PCPU_SENSE		14
TP93NF	TPT_VSS_DDR_SENSE		14

SOC - POWER

TP93NC	ADC_SOC_TO_PMU_VDD_CPU		12 57 59
TP93ND	ADC_SOC_TO_PMU_VDD_GPU		12 57 59
TP93NE	ADC_SOC_TO_PMU_VDD_SOC		10 59

SOC - USB KIS

TP93GS	USB_KIS_P	PLACE_NEAR=U3800.G20:5MM	5 34
TP93GT	USB_KIS_N	PLACE_NEAR=U3800.G22:5MM	5 34

NAND - POWER

TP93NG	PP1V8_NAND1_AVDD_H		16
TP93NH	PP1V8_NAND2_AVDD_H		17

BASEBAND - ANT SWITCH PWR

TP93H0	
TP93H1	
TP93H2	
TP93H3	
TP93H4	
TP93H5	

BASEBAND - SIM CARD

TP93H6	
TP93H7	
TP93H8	
TP93H9	
TP93HA	

BASEBAND - MISC

TP93HB		
TP93HC		
TP93HD	NC_BB_TO_DOTARA_TX_IND	64 66
TP93HE		
TP93HF		
TP93HJ		
TP93HK		
TP93HL		
TP93HM		

WIFI/BT

TP93I2	CLK_PMU_TO_WLAN_32K	59 66

HALL EFFECT

TP93J5	GPIO_APANEL_HALL_TO_PMU_IRQ_L	40 52 59
TP93J6	GPIO_CPANEL_HALL_TO_PMU_IRQ_L	23 52 59

DISPLAY

TP93JC	LPDP_HPD_EMI	40 41
TP93K0	GPIO_PMU_TO_LCD_PWREN	40 41 59
TP93JA	I2C_TCON_SCL_CONN	40
TP93JB	I2C_TCON_SDA_CONN	40
TP93JD	PP1V8_S3_HALL_TCON_CONN	40
TP93JE	SYSTEM_TO_TCON_FORCE_PWM	40

AOP

TP93K1	CLK_PMU_TO_AOP_32K	9 59

AUDIO - DIGITAL MICS

TP93K2	DMIC1_MIC_SCLK_CONN	27
TP93K3	DMIC1_MIC_SD_CONN	27
TP93K4	DMIC2_MIC_SCLK_CONN	23
TP93K5	DMIC2_MIC_SD_CONN	23
TP93KE	DMIC3_MIC_SCLK_ROS_CONN	39
TP93KF	DMIC2_MIC_SD_ROS_CONN	39
TP93JA	PP1V8_S2_DMIC_CONN	27 39
TP93KG	DMIC4_MIC_SCLK_CMPS_CONN	18
TP93KH	DMIC3_MIC_SD_CMPS_CONN	18
TP93KI	PP1V8_S2_DMIC_CMPS_CONN	18
TP93KJ	PP1V8_S2_DMIC_C3_CONN	23
TP93KK		

TOUCH

TP93N1	PP15V0_TOUCH_FILT	19 20
TP93N2	PP2V8_LANAI_M_VDDANA	19
TP93N3	PP2V8_KONA_S_VDDANA	20
TP93NI	GPIO_DOMBRA_BST_FPWM	19 20
TP93NJ	GPIO_KONA_S_DOMBRA_BST_EN	19 20
TP93NK	GPIO_DOMBRA_BST_FB_CTRL	19 20

CMPS

TP93P1	SPI_SENSORS_MISO_CONN	18
TP93P2	SPI_SENSORS_MOSI_CONN	18
TP93P3	SPI_SENSORS_SCLK_CONN	18
TP93P4	SPI_MOLY_CS_L_CONN	18
TP93P5	GPIO_MOLY_TO_AOP_IRQ_CONN	18

JASPER/PENINSULA

TP93P6	
TP93P7	
TP93P8	

FIDUCIALS

FID9300 FID 0P5SM1P0SQ-NSP
FID9301 FID 0P5SM1P0SQ-NSP
FID9302 FID 0P5SM1P0SQ-NSP
FID9303 FID 0P5SM1P0SQ-NSP
FID9304 FID 0P5SM1P0SQ-NSP
FID9305 FID 0P5SM1P0SQ-NSP

CAN MOUNTING HOLES

DRILL SIZE: 1.1MM X 0.4MM
PLATING SIZE: 1.4MM X 0.7MM
APN: 998-2691

SL9300 TH-NSP SL-1.1X0.4-1.4X0.7
SL9301 TH-NSP SL-1.1X0.4-1.4X0.7
SL9302 TH-NSP SL-1.1X0.4-1.4X0.7
SL9304 TH-NSP SL-1.1X0.4-1.4X0.7
SL9305 TH-NSP SL-1.1X0.4-1.4X0.7
SL9310 TH-NSP SL-1.1X0.4-1.4X0.7

0.9MM X 0.35MM
1.2MM X 0.65MM
APN:998-18650

SL9311 TH-NSP SL-0.9X0.35-1.2X0.65

STANDOFFS

SMT:860-00199 TH:860-00860/860-01104

STD9312 STDOFF-3.3X1.8R0.95H-SM
STD9323 STDOFF-3.3X1.8R0.95H-SM
STD9314 STDOFF-3.3X1.8R0.95H-SM
STD9315 STDOFF-3.3X1.8R0.95H-SM
STD9318 STDOFF-3.3X1.8R0.95H-SM
STD9319 STDOFF-3.3X1.8R0.95H-SM
STD9320 STDOFF-3.3X1.8R0.95H-SM
STD9330 STDOFF-3.3X1.8R0.95H-SM

STD9313 STDOFF-3.8X2.5R-0.85H-1P65-TH
STD9322 STDOFF-3.8X2.5R-0.95H-1P65-TH
STD9316 STDOFF-3.8X2.5R-0.95H-1P65-TH
STD9317 STDOFF-3.8X2.5R-0.95H-1P65-TH
STD9324 STDOFF-3.8X2.5R-0.95H-1P65-TH
STD9325 STDOFF-3.8X2.5R-0.95H-1P65-TH

VCC_MAIN

TP939G		
TP939H	PPVCC_MAIN	26 34 51 61 68 72
TP939I		
TP939J		

VBUS USB

TP9390		
TP9391		
TP9392	PPVBUS_USB_CONN	
TP9393		
TP9394		
TP9395		

VBUS ORION

TP939C		
TP939D	PPVBUS_ORION_CONN	64 68
TP939E		
TP939F		

VBAT

TP939P		
TP939I		
TP939A		
TP939B	PPBATT_VCC	61 68 72
TP939G		
TP939H		

VCC_HIGH

TP939K		
TP939L	PPVCC_HIGH	61 68 72
TP939M		
TP939N		

SYNC_MASTER=J317_MLB_B SYNC_DATE=11/16/2018

PAGE TITLE

TEST: TPS/HOLES/FIDUCUALS

SMT TEST FIXTURE TP

POWER - ADAMS

TP9401	A	1	PP1V4_ADAMS1_VDDL	45 72
TP9402	A	1	PP3V3_ADAMS_LDO1	45 72
TP9403	A	1	PP3V0_JASPER_RX_AVDDH	45 72
TP9404	A	1	PP3V0_PENROSE	45 72
TP9405	A	1	PP3V3_JASPER_TX_AVDDH	45 72
TP9406	A	1	PP3V3_JAS_EXT_LDO_R2	47
TP9407	A	1	PP2V85_WIDE_RCAM1_AVDDH1	45 72
TP9408	A	1	PP2V85_SWIDE_RCAM2_AVDDH1	45 72
TP9409	A	1	PP1V215_RCAM_SWIDE_VDDL	45 72
TP940A	A	1	PP1V215_RCAM_WIDE_VDDL	45 72
TP940B	A	1	PP1V8_CAM_PMU1_IO_SW	45 72
TP940C	A	1	PN_TOF_VSPAD	47 50 69
TP940D	A	1	PN_TOF_VSPAD	47 50 69
TP940E	A	1	PP_TOF_VDDLAS	47 50 69
TP940F	A	1	PP_TOF_VDDLAS	47 50 69
TP940G	A	1	PP1V2_JASPER_DVDD	47 50

POWER - CAMERA (LI)

TP9411	A	1	PP1V215_FRONT_CAM_CONN	24
TP9412	A	1	PP1V8_CAM_FRONT_CONN	24
TP9413	A	1	PP2V90_FRONT_CAM_CONN	24

POWER - JULIET

TP9414	A	1	PP1V215_JULIET_DVDD_CONN	38
TP9415	A	1	PP1V8_JULIET_VDDIO_CONN	38
TP9416	A	1	PP2V85_JULIET_AVDD_CONN	38

POWER - CAMERA (IN)

TP9417	A	1	PP1V215_RCAM_WIDE_VDDL_CONN	48
TP9418	A	1	PP1V8_RCAM_WIDE_VDDIO_CONN	48
TP9419	A	1	PP2V85_RCAM_WIDE_AVDD_CONN	48

POWER - CAMERA (OH)

TP941A	A	1	PP1V215_RCAM_SWIDE_DVDD_CONN	49
TP941B	A	1	PP1V8_RCAM_SWIDE_VDDIO_CONN	49
TP941C	A	1	PP2V85_RCAM_SWIDE_AVDDH1_CONN	49

POWER - JASPER

TP941D	A	1	PP_TOF_VDDLAS_CONN	50
TP941E	A	1	PN_TOF_VSPAD_CONN	50
TP941F	A	1	PP1V8_CAM_TOF_VDDIO_CONN	50

CAMERA-STROBE/PENROSE

5.00V

TP9421	A	1	PPSTROBE_LED_COOL1_CONN	23 25 69	5.00V
TP9422	A	1	PPSTROBE_LED_WARM1_CONN	23 25 69	
TP9423	A	1	PPSTROBE_LED_COOL2_CONN	23 25 69	5.00V
TP9424	A	1	PPSTROBE_LED_WARM2_CONN	23 25 69	5.00V
TP9425	A	1	PPSTROBE_LED_COOL1_CONN	23 25 69	
TP9426	A	1	PPSTROBE_LED_WARM1_CONN	23 25 69	
TP9427	A	1	PPSTROBE_LED_COOL2_CONN	23 25 69	
TP9428	A	1	PPSTROBE_LED_WARM2_CONN	23 25 69	
TP9429	A	1	LED_DRIVER_NTC_CONN	23 25	
TP942A	A	1	PPSTROBE1_BST	25	
TP942B	A	1	PPSTROBE2_BST	25	
TP942C	A	1	PENROSE_VIS_IR_VOUT1_P	22 23	
TP942D	A	1	PENROSE_IR_VOUT2_P	22 23	
TP942E	A	1	GPIO_RCAM_PMU_TO_STROBE_DRIVER_HWEN	25 46	
TP942F	A	1	PP3V0_PENROSE_CONN	23	
TP942G	A	1	PP3V3_PENROSE	54 72	

CAMERA - LI

TP942H	A	1	ISP_CAM_FRONT_CLK_CONN	24
TP942I	A	1	ISP_CAM_FRONT_SCL_CONN	24
TP942J	A	1	ISP_CAM_FRONT_SDA_CONN	24
TP942K	A	1	ISP_CAM_FRONT_SHUTDOWN_L_CONN	24

CAMERA - IN

TP942L	A	1	AP_TO_WIDE_CLK_12MHZ_CONN	48
TP942M	A	1	I2C_RCAM1_WIDE_SCL_CONN	48
TP942N	A	1	I2C_RCAM1_WIDE_SDA_CONN	48
TP942O	A	1	ISP_TO_WIDE_SHUTDOWN_CONN_L	48
TP942Q	A	1	WIDE_TO_STROBE_DRIVER_STROBE_CONN	48

CAMERA - OH

TP942R	A	1	AP_TO_SWIDE_CLK_12MHZ_CONN	49
TP942S	A	1	I2C_RCAM2_SWIDE_SCL_CONN	49
TP942T	A	1	I2C_RCAM2_SWIDE_SDA_CONN	49
TP942U	A	1	ISP_TO_SWIDE_SHUTDOWN_CONN_L	49
TP942V	A	1	SWIDE_SYNC_CONN	49
TP942W	A	1	SWIDE_TO_STROBE_DRIVER_STROBE_CONN	49

CAMERA - JASPER

TP942X	A	1	CLK_RCAM_PMU_TO_TOF_12MHZ_CONN	50
TP942Y	A	1	I2C_JASPER_SCL_CONN	50
TP942Z	A	1	I2C_JASPER_SDA_CONN	50
TP943X	A	1	GPIO_PMU_TO_TOF_INT_CONN_L	50
TP943Y	A	1	TOF_FSYNC_CONN	50
TP943Z	A	1	GPIO_RCAM_PMU_TO_TOF_SHUTDOWN_CONN_L	50

TITUS/ROSALINE/JULIET

TP9431	A	1	PP_TITUS_DENSE_ANODE	37 38 69
TP9432	A	1	PP_TITUS_DENSE_ANODE	37 38 69
TP9433	A	1	PP_TITUS_SPARSE_ANODE	37 38 69
TP9434	A	1	PP_TITUS_SPARSE_ANODE	37 38 69
TP9435	A	1	PP_TITUS_A_ANODE	37 38 69
TP943G	A	1	PP_TITUS_A_ANODE	37 38 69
TP9437	A	1	PP_TITUS_B_ANODE	37 38 69
TP9438	A	1	PP_TITUS_B_ANODE	37 38 69
TP9439	A	1	PP_TITUS_CATHODE	37 38 69
TP943A	A	1	PP_TITUS_CATHODE	37 38 69
TP943B	A	1	PP_ROSALINE_ANODE	37 39 69
TP943C	A	1	PP_ROSALINE_ANODE	37 39 69
TP943D	A	1	GPIO_RIGEL_TO_SOC_IRQ	7 37
TP943E	A	1	RIGEL_TESTMODE_EN	37
TP943F	A	1	JULIET_PMU_TO_RIGEL_STROBE_CONN	38
TP943H	A	1	I2C3_ISP_BI_MAMA_BEAR_SDA_CONN	38
TP943I	A	1	I2C3_ISP_TO_MAMA_BEAR_SCL_CONN	38
TP943J	A	1	MAMA_BEAR_BI_RIGEL_STATUS_CONN	38
TP943K	A	1	TITUS_TO_AOP_B2B_DETECT_CONN	38
TP943L	A	1	ISP_JULIET_SCL_CONN	38
TP943M	A	1	ISP_JULIET_SDA_CONN	38
TP943N	A	1	AP_TO_JULIET_CLK_CONN	38
TP943O	A	1	AP_TO_JULIET_SHUTDOWN_L_CONN	38
TP943P	A	1	I2C0_AOP_TO_PROX_ALS_YOGI_SCL_CONN	39
TP943Q	A	1	I2C0_AOP_BI_PROX_ALS_YOGI_SDA_CONN	39
TP943R	A	1	PP3V0_YOGI_PROX_ALS_CONN	39
TP943S	A	1	YOGI_TO_RIGEL_STATUS_CONN	39
TP943T	A	1	PROX_BI_AP_AOP_INT_CONN_L	39
TP943U	A	1	ALS_C4_TO_SOC_INT_CONN_L	39
TP943V	A	1	ALS_C3_TO_SOC_INT_CONN_L	39
TP943W	A	1	TITUS_TO_RIGEL_VCSEL_NTC_CONN	38

DMIC GATING

TP9461	A	1	GPM_DMIC_DISABLE_L	52
TP9463	A	1	SLG_TO_AOP_DMIC_DISABLE_WARN_L	9 52

WILL I2C

TP9464	A	1	I2C3_RCAM_PMU_SCL	4 46
TP9465	A	1	I2C3_RCAM_PMU_SDA	4 46

PENROSE ADC I2C

TP9466	A	1	I2C_SCL_1V8	4 6
TP9467	A	1	I2C3_SDA_1V8	4 6

CAM SYNC

TP9451	A	1	FRONT_CAM_SYNC_ACE	32 34
TP9452	A	1	GPIO_FCAM_JULIET_TO_ACE_SYNC	24 32 38
TP9453	A	1	GPIO_RCAM_PMU_TO_TOF_PMU_EN	46 47
TP9454	A	1	WIDE_SYNC_CONN	48
TP9455	A	1	REAR_CAM_SYNC_ACE	32 34

SYNC_MASTER:TP NEW PAGE SYNC_DATE:02/21/2019

PAGE TITLE

TEST: TPS ADDITIONAL

EE CHARACTERIZATION PROBE POINT

SOC

PP9504 P4MM SM	1	ADC_SOC_TO_PMU_ANALOGMUX_OUT	5 59
PP9505 P4MM SM	1	ADC_SOC_TO_PMU_VDD_CPU_R	12
PP9506 P4MM SM	1	ADC_SOC_TO_PMU_VDD_GPU_R	12
PP9507 P4MM SM	1	ADC_SOC_TO_PMU_VDD_SOC_R	10

FOR SEG

PP9503 P4MM SM	1	PPVDD_S1_SOC	57 68 72
PP950E P4MM SM	1	PPVDD_S1_FIXED	53 68 72
PP950K P4MM SM	1	PPVDD_ECPU	60 68 72

ACE/REDRIVER

PP9510 P4MM SM	1	ACE_UART_RX	34
PP9511 P4MM SM	1	ACE_UART_TX	34

FH SPEAKER I2S

PP9521 P4MM SM	1	I2S2_SOC_TO_SPKRAMP_FH_BCLK	PLACE_NEAR=U3450.A4:50MM	6 30 31
PP9522 P4MM SM	1	I2S2_SOC_TO_SPKRAMP_FH_LRCK	PLACE_NEAR=U3450.A3:50MM	6 30 31
PP9523 P4MM SM	1	I2S2_SOC_TO_SPKRAMP_FH_DOUT	PLACE_NEAR=U3450.A1:50MM	6 30 31
PP9524 P4MM SM	1	I2S2_SPKRAMP_FH_TO_SOC_DOUT	PLACE_NEAR=U0600.U3:50MM	6 30 31

CN SPEAKER I2S

PP9525 P4MM SM	1	I2S1_SOC_TO_SPKRBST_CN_MCLK	PLACE_NEAR=U3000.C5:50MM	6 26
PP9526 P4MM SM	1	I2S1_SOC_TO_SPKRAMP_CN_BCLK	PLACE_NEAR=U3250.A4:50MM	6 28 29
PP9527 P4MM SM	1	I2S1_SOC_TO_SPKRAMP_CN_LRCK	PLACE_NEAR=U3250.A3:50MM	6 28 29
PP9528 P4MM SM	1	I2S1_SOC_TO_SPKRAMP_CN_DOUT	PLACE_NEAR=U3250.A1:50MM	
PP9529 P4MM SM	1	I2S1_SPKRAMP_CN_TO_SOC_DOUT	PLACE_NEAR=U0600.BC32:50MM	
PP952D P4MM SM	1	GPIO_BST_MASTER_TO_SOC_IRQ_L		6 26
PP952E P4MM SM	1	GPIO_BST_SLAVE_TO_SOC_IRQ_L		6 26
PP952F P2MM-NSM SM	1	BST_CLK_SYNC		26
PP952G P2MM-NSM SM	1	BST_SYNC_R		26

PENROSE

PP952A P4MM SM	1	I2S3_SOC_TO_PENROSE_BCLK	PLACE_NEAR=R2661.2:50MM	6 22
PP952B P4MM SM	1	I2S3_SOC_TO_PENROSE_LRCK	PLACE_NEAR=R2660.2:50MM	6 22
PP952C P4MM SM	1	I2S3_PENROSE_TO_SOC_DOUT	PLACE_NEAR=U0600.BD39:50MM	6 22
PP952H P4MM SM	1	I2S3_SOC_TO_PENROSE_MCLK	PLACE_NEAR=R2664.2:50MM	6 22

ORION

PP953B P4MM SM	1	GPIO_AOP_TO_ORION_HWEN	9 56
PP953C P4MM SM	1	ORION_CONN_STATUS	56

SENSOR SPI LINES

PP9544 P3MM SM	1	SPI_SENSORS_SCLK	PLACE_NEAR=U2150.2:10MM	9 18 70
PP9545 P3MM SM	1	SPI_SENSORS_MISO	PLACE_NEAR=U0600.AC3:10MM	9 18
PP9546 P3MM SM	1	SPI_SENSORS_MOSI	PLACE_NEAR=U2150.3:10MM	9 18 70
PP9547 P3MM SM	1	SPI_SENSORS_SCLK	PLACE_NEAR=U2120.4:10MM	9 18 70
PP9549 P3MM SM	1	SPI_SENSORS_MOSI	PLACE_NEAR=U2120.3:10MM	9 18 70

PMU/CHARGER

PP95G1 P4MM SM	1	GPIO_PMU_TO_SOC_IRQ_L	9 59
PP95G7 P4MM SM	1	USB_VBUS_DETECT	5 61
PP95G2 P4MM SM	1	NUB_SPMI_SCLK	9
PP95G3 P4MM SM	1	NUB_SPMI_SDATA	9 59
PP95G4 P4MM SM	1	ISP_SPMI_APOLLO_SCLK	7 55
PP95G5 P4MM SM	1	ISP_SPMI_APOLLO_SDATA	7 55
PP9539 P4MM SM	1	SYS_ALIVE	16 17 59
PP95G0 P4MM SM	1	GPIO_ROSALINE_TO_AOP_IRQ_L	9 39

ACE/REDRIVER

PP95G8 P4MM SM	1	ACE_TO_REDRIVER_EN	34 35

GRAPE

PP9580 P3MM SM	1	SPI_SOC_TO_GRAPE_SCLK	6 19
PP9581 P3MM SM	1	SPI_SOC_TO_GRAPE_MISO	6 19
PP9582 P3MM SM	1	SPI_SOC_TO_GRAPE_MOSI	6 19
PP9583 P3MM SM	1	SPI_SOC_TO_GRAPE_CS_L	6 19
PP9584 P3MM SM	1	GPIO_SOC_TO_GRAPE_RESET_L	6 19 20
PP9585 P3MM SM	1	GPIO_GRAPE_TO_AOP_IRQ_L	9 19
PP9586 P3MM SM	1	KONA_S_TO_LANAI_M_RESET_DET_L	19 20
PP9587 P3MM SM	1	PSE_SYNC	19 20
PP9588 P3MM SM	1	KMSI_MISO	19 20
PP9589 P3MM SM	1	KMSI_MOSI	19 20
PP958A P3MM SM	1	KMSI_STRB_IN	19 20
PP958B P3MM SM	1	KMSI_STRB_OUT	19 20
PP958C P3MM SM	1	LANAI_BOOST_ATEST	19
PP958D P3MM SM	1	TESTPOINT_KONA_S_UART_TX	20
PP958E P3MM SM	1	TESTPOINT_KONA_S_UART_RX	20
PP9593 P2MM SM		LANAI_BOOT0_M	19
PP9594 P2MM SM		LANAI_BOOT1_M	19
PP9595 P3MM SM	1	KONA_BOOT0_S	20
PP9596 P3MM SM	1	KONA_BOOT1_S	20
PP958H P3MM SM	1	SWD_KONA_SWDIO	20
PP958J P3MM SM	1	SWD_KONA_SWCLK	20
PP958J P3MM SM	1	GPIO12_KONA_LDO_ADJ	19 20
PP958K P3MM SM	1	GPIO13_KONA_LDO_EN	19 20
PP958L P3MM SM	1	GPIO_GRAPE_TO_AOP_TIME_SYNC	9 19
PP958M P3MM SM	1	CLK_LANAI_M_24MHZ	19
PP958N P3MM SM	1	GPIO_SOC_TO_GRAPE_BSYNC0	19 20 40
PP958P P3MM SM	1	GPIO_SOC_TO_GRAPE_BSYNC1	19 20 40
PP958X P3MM SM	1	UART_AOP_TO_GRAPE_TX	9 19
PP958Y P3MM SM	1	UART_GRAPE_TO_AOP_TX	9 19
PP958Z P3MM SM	1	UART_DEBUG_TO_GRAPE_TX	19 34
PP958Q P3MM SM	1	SPI_LANAI_M_TO_KONA_S_MISO	19 20
PP958T P3MM SM	1	SPI_LANAI_M_TO_KONA_S_SCLK	19 20
PP958U P3MM SM	1	SPI_LANAI_M_TO_KONA_S_CS_L	19 20
PP958W P3MM SM	1	SPI_LANAI_M_TO_KONA_S_MOSI	19 20

GRAPE POWER

PP958R P3MM SM	1	PP3V3_GRAPE_FILT	19 20
PP958S P3MM SM	1	PP1V8_GRAPE_XTAL_FILT	19 20
PP958V P3MM SM	1	PP1V8_GRAPE_AON_RC	19 20

DMIC SECURED

PP9590 P3MM SM	1	DMIC1_MIC_SD	9 52
PP9591 P3MM SM	1	DMIC2_MIC_SD	9 52
PP9592 P3MM SM	1	DMIC3_MIC_SD	9 52

WIFI(SEE MORE ON PAGE 49)

PP95BL P4MM SM	1	GPIO_SOC_TO_BT_TO_GRAPE_TS_SYNC	6 19 20 42 66

WLAN PCIE TPS

PP95E0 P2MM SM	1	PLACE_NEAR=U0600.BF11:100MM	PCIE_WLAN_TO_SOC_TX_P	8 66
PP95E1 P2MM SM	1	PLACE_NEAR=U0600.BE11:100MM	PCIE_WLAN_TO_SOC_TX_N	8 66
PP95E2 P2MM SM	1	PLACE_NEAR=U_WLAN_W:99:20MM	PCIE_SOC_TO_WLAN_TX_P	8 66
PP95E3 P2MM SM	1	PLACE_NEAR=U_WLAN_W:30:20MM	PCIE_SOC_TO_WLAN_TX_N	8 66
PP95E4 P2MM SM	1	PLACE_NEAR=U_WLAN_W:95:20MM	PCIE_SOC_TO_WLAN_REFCLK_P	8 66
PP95E5 P2MM SM	1	PLACE_NEAR=U_WLAN_W:26:20MM	PCIE_SOC_TO_WLAN_REFCLK_N	8 66

NAND

PP95D6 P3MM SM	1	PLACE_NEAR=U1800.E8:50MM	PCIE_SOC_TO_NAND1_RESET_L	8 16 17
PP95DD P3MM SM	1	PLACE_NEAR=U1900.E8:50MM	PCIE_SOC_TO_NAND2_RESET_L	8 17
PP95DE P2MM SM	1	PLACE_NEAR=U1800.J4:50MM	NAND1_ANI1_VREF	16
PP95DF P3MM SM	1	PLACE_NEAR=U1800.G12:50MM	NAND1_ANI0_VREF	16
PP95DG P3MM SM	1	PLACE_NEAR=U1900.J4:50MM	NAND2_ANI1_VREF	17
PP95DH P3MM SM	1	PLACE_NEAR=U1900.G12:50MM	NAND2_ANI0_VREF	17
PP95DI P3MM SM	1	PLACE_NEAR=U1900.C4:50MM	GPIO_SOC_TO_NAND_FW_STRAP	6 16 17
PP95DJ P3MM SM	1	PLACE_NEAR=U1900.L4:50MM	GPIO_SOC_TO_NAND_RESET_L	6 16 17

IR CAMERA - JULIET

PP9550 P2MM SM	1	MIPI_PEARL_TO_SOC_CLK_P NO_XNET_CONNECTION=1	7 38
PP9551 P2MM SM	1	MIPI_PEARL_TO_SOC_CLK_N NO_XNET_CONNECTION=1	7 38
PP9552 P2MM SM	1	MIPI_PEARL_SOC_DATA_P<0> NO_XNET_CONNECTION=1	7 38
PP9553 P2MM SM	1	MIPI_PEARL_SOC_DATA_N<0> NO_XNET_CONNECTION=1	7 38
PP9554 P2MM SM	1	MIPI_PEARL_SOC_DATA_P<1> NO_XNET_CONNECTION=1	7 38
PP9555 P2MM SM	1	MIPI_PEARL_SOC_DATA_N<1> NO_XNET_CONNECTION=1	7 38
PP9556 P2MM SM		CLK_SOC_TO_PEARL_12MHZ NO_XNET_CONNECTION=1	7 37 38

CAMERA - FRONT

PP9560 P2MM SM	1	LPDP_SOC_TO_FCAM2_AUX NO_XNET_CONNECTION=1	PLACE_NEAR=U0600.AU8:100MM	7 24
PP9562 P2MM SM	1	LPDP_FCAM2_TO_SOC_DATA_P<0> NO_XNET_CONNECTION=1	PLACE_NEAR=U0600.AU6:100MM	7 24
PP9563 P2MM SM	1	LPDP_FCAM2_TO_SOC_DATA_N<0> NO_XNET_CONNECTION=1	PLACE_NEAR=U0600.AU5:100MM	7 24
PP9564 P2MM SM	1	LPDP_FCAM2_TO_SOC_DATA_P<1> NO_XNET_CONNECTION=1	PLACE_NEAR=U0600.AU1:100MM	7 24
PP9565 P2MM SM	1	LPDP_FCAM2_TO_SOC_DATA_N<1> NO_XNET_CONNECTION=1	PLACE_NEAR=U0600.AU2:100MM	7 24

LPDPRX TPS

PP95F0 P2MM SM	1	LPDP_RCAM1_TO_SOC_DATA_P<0>	PLACE_NEAR=U0600.AT4:150MM	7 48
PP95F1 P2MM SM	1	LPDP_RCAM1_TO_SOC_DATA_N<0>	PLACE_NEAR=U0600.AT5:150MM	7 48
PP95F2 P2MM SM	1	LPDP_RCAM1_TO_SOC_DATA_P<1>	PLACE_NEAR=U0600.AT1:150MM	7 48
PP95F3 P2MM SM	1	LPDP_RCAM1_TO_SOC_DATA_N<1>	PLACE_NEAR=U0600.AT2:150MM	7 48
PP95F4 P2MM SM	1	LPDP_SOC_TO_RCAM1_AUX	PLACE_NEAR=U0600.AT8:150MM	7 48
PP95F5 P2MM SM	1	LPDP_SWIDE_TO_SOC_DATA_P<0>	PLACE_NEAR=U0600.AV4:150MM	7 49
PP95F6 P2MM SM	1	LPDP_SWIDE_TO_SOC_DATA_N<0>	PLACE_NEAR=U0600.AV5:150MM	7 49
PP95F7 P2MM SM	1	LPDP_SWIDE_TO_SOC_DATA_P<1>	PLACE_NEAR=U0600.AV1:150MM	7 49
PP95F8 P2MM SM	1	LPDP_SWIDE_TO_SOC_DATA_N<1>	PLACE_NEAR=U0600.AV2:150MM	7 49
PP95F9 P2MM SM	1	LPDP_SOC_TO_SWIDE_AUX	PLACE_NEAR=U0600.AT7:150MM	7 49
PP95FA P2MM SM	1	LPDP_JASPER_TO_SOC_DATA_P	PLACE_NEAR=U0600.AW4:150MM	7 50
PP95FB P2MM SM	1	LPDP_JASPER_TO_SOC_DATA_N	PLACE_NEAR=U0600.AW5:150MM	7 50
PP95FC P2MM SM	1	LPDP_SOC_TO_JASPER_AUX	PLACE_NEAR=U0600.AU7:150MM	7 50

SYNC_MASTER=J317_MLB_B SYNC_DATE=11/16/2018

PAGE TITLE

TEST: EE TP/PP

EE DC RESISTANCE TABLE

DC RESISTANCE FAI REQUIRED MEASUREMENTS			
FROM PIN (REFDES.PN)	TO PIN (RFFDES.PN)	VALUE (MILLIOHM) (OPTIONAL)	TOLERANCE (+/-) (OPTIONAL)
U8100.K3	L8100.1	?	?
U8100.M3	L8101.1	?	?
U8100.P3	L8102.1	?	?
U8100.T3	L8103.1	?	?
L8103.2	U0600.AM28	?	?
U8100.A2	L8110.1	?	?
U8100.C4	L8111.1	?	?
U8100.C6	L8112.1	?	?
U8100.A8	L8113.1	?	?
L8112.2	U0600.AF15	?	?
L8120.1	U8100.V7	?	?
L8121.1	U8100.V9	?	?
L8121.2	U0600.Y14	?	?
L8130.1	U8100.V11	?	?
L8130.2	U7600.6	?	?
L8130.2	U2701.3	?	?
L8130.2	U7700.B6	?	?
L8130.2	U7602.6	?	?
L8130.2	U8000.A4	?	?
L8130.2	U0600.N12	?	?
L8130.2	U8600.3	?	?
U8600.5	U0600.AE39	?	?
U8600.5	U0702.A1	?	?
U8600.5	U1800.E2	?	?
U8600.5	U1900.E2	?	?
U7700.H3	L7740.1	?	?
U7700.K3	L7741.1	?	?
U7700.M3	L7742.1	?	?
L7742.2	U7700.L12	?	?
L7742.2	U0600.C49	?	?
U7700.F3	L7750.1	?	?
L7750.2	U0600.AY39	?	?
U7700.C3	L7760.1	?	?
L7760.2	U1800.L12	?	?
L7760.2	U1900.G4	?	?
U8100.V3	L8170.1	?	?
U8100.B12	L8480.1	?	?
L8480.2	U0600.AE17	?	?
J8900.3	Q8580.5	?	?
Q8580.1	U2900.A2	?	?
Q8580.1	U2950.A2	?	?
Q8580.1	U4100.F1	?	?
Q8581.1	U7700.D12	?	?
Q8580.1	U8100.W1	?	?
Q8580.1	U4600.3	?	?
U4600.5	L4601.1	?	?
L4601.2	J4520.1	?	?
Q8580.1	U3200.B1	?	?
Q8580.1	L3000.2	?	?
L3000.1	U3000.A2	?	?
Q8580.1	U3300.B1	?	?
Q8580.1	L3001.2	?	?
L3001.1	U3000.F2	?	?
Q8580.1	U3400.B1	?	?
Q8580.1	L3002.2	?	?
L3002.1	U3001.A2	?	?
Q8580.1	U3500.B1	?	?
Q8580.1	L3003.2	?	?
L3003.1	U3001.F2	?	?
Q8580.1	L3600.1	?	?
L3600.2	U3620.5	?	?
Q8580.1	L8425.1	?	?
L8425.2	U8100.C17	?	?
Q8580.1	L8455.1	?	?
L8455.2	U8100.B17	?	?
Q8580.1	L8701.1	?	?
L8701.2	U8700.7	?	?
Q8580.1	U2350.A2	?	?
Q8580.1	L8710.1	?	?
L8710.2	U8710.5	?	?
Q8580.1	Q2201.7	?	?
Q2201.1	R2208.1	?	?
R2208.2	L2201.1	?	?
L2201.2	Q2202.3	?	?
U8500.L7	L8570.1	?	?
U8500.E5	L8571.1	?	?
L8570.2	U8500.L10	?	?
L8571.2	U8500.A10	?	?
R8000.1	U8000.C1	?	?
U3800.M3	U8500.L13	?	?
U3620.7	U3800.N14	?	?
U3800.M15	J3700.43	?	?
U3800.M17	J3700.45	?	?
U8710.7	U8000.E3	?	?
U8000.F6	Q8051.3	?	?
Q8051.2	FL8950.1	?	?
FL8950.2	J8902.10	?	?
U8100.J18	R8995.2	?	?
U7700.C13	R4311.1	?	?
R4311.2	J4300.6	?	?
U8100.L18	U0600.AW32	?	?
U8100.K18	U3900.10	?	?

DC RESISTANCE FAI REQUIRED MEASUREMENTS			
FROM PIN (REFDES.PN)	TO PIN (RFFDES.PN)	VALUE (MILLIOHM) (OPTIONAL)	TOLERANCE (+/-) (OPTIONAL)
U8100.M18	J8901.4	?	?
U7700.J13	FL2803.1	?	?
FL2803.2	J2800.1	?	?
U7700.L13	U1900.R8	?	?
U7700.L13	U1800.G6	?	?
U8100.P18	L2204.1	?	?
L2204.2	U2200.E12	?	?
L2204.2	U2301.R1	?	?
U8100.W15	U0600.AC10	?	?
U7700.N10	U0600.AV15	?	?
U8100.U14	J8901.8	?	?
U6100.E7	FL6503.1	?	?
FL6503.2	J6500.17	?	?
U6100.C7	FL6506.1	?	?
FL6506.2	J6500.26	?	?
U6100.A4	U2610.D1	?	?
U6100.A4	U2600.C2	?	?
U6100.A4	U2650.C2	?	?
U7700.E13	FL2800.1	?	?
FL2800.2	J2800.17	?	?
U7700.N11	XW4270.1	?	?
XW4270.2	J4230.19	?	?
U7700.F13	FL4272.1	?	?
FL4272.2	J4230.14	?	?
U7700.G13	J4200.2	?	?
U3200.D2	J3200.5	?	?
U3200.C2	J3200.4	?	?
U3250.D2	J3200.1	?	?
U3250.C2	J3200.3	?	?
U3300.D2	J3300.4	?	?
U3300.C2	J3300.5	?	?
U3350.D2	J3300.3	?	?
U3350.C2	J3300.1	?	?
U3400.D2	J3400.3	?	?
U3400.C2	J3400.1	?	?
U3450.D2	J3400.4	?	?
U3450.C2	J3400.5	?	?
U3500.D2	J3500.4	?	?
U3500.C2	J3500.5	?	?
U3550.D2	J3500.3	?	?
U3550.C2	J3500.1	?	?

SYNC_MASTER=J317_MLB_B SYNC_DATE=11/16/2018

PAGE TITLE

TEST: DCR TABLE

POWER CONNECTIONS

ATHENA APOLLO BUCKS:

ATHENA_BUCK0 (ACTIVE)
68 57 PPVDD_CPU (MAKE_BASE=TRUE) — PPVDD_CPU 12 57

ATHENA_BUCK1 (SW_CONTROL)
68 57 PPVDD_GPU (MAKE_BASE=TRUE) — PPVDD_GPU 12 57

ATHENA_BUCK2 (SLEEP1)
70 68 57 PPVDD_S1_SOC (MAKE_BASE=TRUE) — PPVDD_S1_SOC 10

ATHENA_BUCK3 (SLEEP3)
68 57 PP1V8_S3 (MAKE_BASE=TRUE)
- PP1V8_S3 10
- PP1V8_S3 9 32 34
- PP1V8_S3 56
- PP1V8_S3 9 11
- PP1V8_S3 23 40 59
- PP1V8_S3 9 41 59 64
- PP1V8_S3 62
- PP1V8_S3 45 46 54 58
- PP1V8_S3 9 20 65
- PP1V8_S3 64
- PP1V8_S3 18 23 27

BUCK3 SWITCHES

ATHENA_BUCK3_SW1 (ACTIVE)
68 65 58 55 PP1V8_SW1 (MAKE_BASE=TRUE)
- PP1V8_SW1 26 28 29 30 31
- PP1V8_SW1 62
- PP1V8_SW1 61
- PP1V8_SW1 58

ATHENA_BUCK3_SW2 (SLEEP2)
68 58 PP1V8_S2_GRAPE (MAKE_BASE=TRUE) — PP1V8_S2_GRAPE 9 19 20

APOLLO_BUCK3_SW1 (ACTIVE)
68 54 7 PP1V8_SW1_CAM (MAKE_BASE=TRUE)
- PP1V8_SW1_CAM 4 MA(MAX) 24
- PP1V8_SW1_CAM 123 MA(MAX)
- PP1V8_SW1_CAM 35 MA(MAX) 37 38 39

APOLLO_BUCK3_SW3 (SLEEP2)
68 54 PP1V8_S3_SW3 (MAKE_BASE=TRUE)
- PP1V8_S3_SW3 18
- PP1V8_S3_SW3 18
- PP1V8_S3_SW3 18

BUCK3_EXT_SW1 (ACTIVE)
68 62 PP1V8_EXT_SW1 (MAKE_BASE=TRUE)
- PP1V8_EXT_SW1 11
- PP1V8_EXT_SW1 11
- PP1V8_EXT_SW1 11
- PP1V8_EXT_SW1 11
- PP1V8_EXT_SW1 5 9 16 17
- PP1V8_EXT_SW1 6
- PP1V8_EXT_SW1 4 6 8 59
- PP1V8_EXT_SW1 11
- PP1V8_EXT_SW1 22

BUCK3_S2_EXT_SW2 (SLEEP2)
68 62 51 PP1V8_S2_EXT_SW2 (MAKE_BASE=TRUE)
- PP1V8_S2_EXT_SW2 66
- PP1V8_S2_EXT_SW2 66

APOLLO_BUCK4 (SLEEP3)
68 53 PP1V1_S3 (MAKE_BASE=TRUE)
- PP1V1_S3 54
- PP1V1_S3 54
- PP1V1_S3 10

APOLLO_BUCK4_SW1 (SPARE)
54 PP1V1_SW1_SPARE (MAKE_BASE=TRUE)

APOLLO_BUCK5 (SLEEP1)
70 68 53 PPVDD_S1_FIXED (MAKE_BASE=TRUE)
- PPVDD_S1_FIXED 13
- PPVDD_S1_FIXED 13
- PPVDD_S1_FIXED 13
- PPVDD_S1_FIXED 13
- PPVDD_S1_FIXED 13
- PPVDD_S1_FIXED 13
- PPVDD_S1_FIXED 13
- PPVDD_S1_FIXED 13
- PPVDD_S1_FIXED 13
- PPVDD_S1_FIXED 13
- PPVDD_S1_FIXED 13
- PPVDD_S1_FIXED 13

APOLLO_BUCK6 (ACTIVE)
68 53 PP2V63_OTP (MAKE_BASE=TRUE) — PP2V63_OTP 16 17

ATHENA_BUCK7 (ACTIVE)
68 57 PPVDD_CPU_SRAM (MAKE_BASE=TRUE) — PPVDD_CPU_SRAM 10 57

ATHENA_BUCK8 (SW_CONTROL)
68 60 PPVDD_GPU_SRAM (MAKE_BASE=TRUE) — PPVDD_GPU_SRAM 10 60

ATHENA_BUCK9 (SLEEP1)
68 60 PPVDD_S1_DCS (MAKE_BASE=TRUE) — PPVDD_S1_DCS 10

APOLLO_BUCK10 (SLEEP1)
68 53 PPVDD_S1_QL (MAKE_BASE=TRUE) — PPVDD_S1_QL 5 10

ATHENA_BUCK11 (ACTIVE)
70 68 60 PPVDD_ECPU (MAKE_BASE=TRUE) — PPVDD_ECPU 12 60

APOLLO_BUCK12 (SW CONTROL)
68 53 PP1V4_CAMERA (MAKE_BASE=TRUE) — PP1V4_CAMERA 54

ATHENA APOLLO LDOS:

ATHENA_LDO1 (SLEEP 2)
68 58 PP3V3_S2_ACE (MAKE_BASE=TRUE) — PP3V3_S2_ACE 32 34

ATHENA_LDO2 (SPARE)
72 58 ATHENA_LDO2_SPARE — 72 58 ATHENA_LDO2_SPARE (MAKE_BASE=TRUE)

ATHENA_LDO3 (SLEEP2)
68 58 PP2V95_S2_THROTTLE (MAKE_BASE=TRUE) — PP2V95_S2_THROTTLE 64

APOLLO_LDO4 (SW CONTROL)
68 54 PP3V0_ALS (MAKE_BASE=TRUE) — PP3V0_ALS 39

ATHENA_LDO5 (SLEEP2)
68 58 PP3V3_S2_REDRIVER (MAKE_BASE=TRUE) — PP3V3_S2_REDRIVER 34 35

ATHENA_LDO6 (SPARE)
72 58 ATHENA_LDO6_SPARE — 72 58 ATHENA_LDO6_SPARE (MAKE_BASE=TRUE)

ATHENA_LDO7 (ACTIVE)
68 58 PP3V3_USB (MAKE_BASE=TRUE) — PP3V3_USB 5 11

ATHENA_LDO8 (SLEEP2)
68 58 PP3V3_S2_SCORPIUS (MAKE_BASE=TRUE) — PP3V3_S2_SCORPIUS 64

APOLLO_LDO9 (SW CONTROL)
68 54 PP1V215_FRONT_CAM (MAKE_BASE=TRUE) — PP1V215_FRONT_CAM 24

APOLLO_LDO10 (ACTIVE)
68 54 PP0V9_NAND (MAKE_BASE=TRUE) — PP0V9_NAND 16 17

ATHENA_LDO11 (SPARE)
68 58 ATHENA_LDO11_SPARE (MAKE_BASE=TRUE) — ATHENA_LDO11_SPARE 1147

ATHENA_LDO13 (SLEEP2)
68 58 PP3V3_S2_GRAPE (MAKE_BASE=TRUE) — PP3V3_S2_GRAPE 19

ATHENA_LDO14 (ACTIVE)
68 58 PP1V2_SOC (MAKE_BASE=TRUE)
- PP1V2_SOC 11
- PP1V2_SOC 10 11
- PP1V2_SOC 11
- PP1V2_SOC 11

APOLLO_LDO15 (SLEEP2)
68 54 PP0V775_S2_AOP (MAKE_BASE=TRUE) — PP0V775_S2_AOP 10

ATHENA_LDO16 (SLEEP2)
68 58 PP1V8_S2_LDO_SCORPIUS (MAKE_BASE=TRUE) — PP1V8_S2_LDO_SCORPIUS 64

APOLLO_LDO17 (ACTIVE)
69 54 PP3V3_PENROSE (MAKE_BASE=TRUE) — PP3V3_PENROSE 22

3.3V

APOLLO_LDO18 (SPARE)
72 54 PP1V215_SPARE_LDO18 — 72 54 PP1V215_SPARE_LDO18 (MAKE_BASE=TRUE) — 1146

APOLLO_LDO19 (SPARE)
72 54 PP3V0_SPARE_LDO19 — 72 54 PP3V0_SPARE_LDO19 (MAKE_BASE=TRUE)

APOLLO_LDO20 (SPARE)
72 54 PP1V8_SPARE_LDO20 — 72 54 PP1V8_SPARE_LDO20 (MAKE_BASE=TRUE)

APOLLO_LDO21 (SW CONTROL)
68 54 PP2V90_FRONT_CAM (MAKE_BASE=TRUE) — PP2V90_FRONT_CAM 43 MA(MAX) 24

APOLLO_LDO22 (SW CONTROL)
68 54 PP1V215_PEARL (MAKE_BASE=TRUE) — PP1V215_PEARL 110 MA(MAX) 38

APOLLO_LDO23 (SW CONTROL)
68 54 PP2V85_PEARL (MAKE_BASE=TRUE) — PP2V85_PEARL 18 MA(MAX) 38

APOLLO_LDO24 (SW CONTROL)
68 54 PP3V1_PEARL (MAKE_BASE=TRUE) — PP3V1_PEARL 25 MA(MAX) 38

APOLLO_LDO26 (SPARE)
68 54 APOLLO_LDO26_SPARE (MAKE_BASE=TRUE) — APOLLO_LDO26_SPARE 1147

APOLLO_LDO27 (SPARE)
72 54 APOLLO_LDO27_SPARE — 72 54 APOLLO_LDO27_SPARE (MAKE_BASE=TRUE) — 1146

ADAMS:

ADAMS_BUCK0 (SW CONTROL)
69 45 PP1V4_ADAMS1_VDDL (MAKE_BASE=TRUE) — PP1V4_ADAMS1_VDDL 45 47

ADAMS_LDO1 (SW CONTROL)
69 45 PP3V3_ADAMS_LDO1 (MAKE_BASE=TRUE)
- PP3V3_ADAMS_LDO1 47
- PP3V3_ADAMS_LDO1 47

3.3V

ADAMS_LDO2 (SW CONTROL)
69 45 PP3V0_JASPER_RX_AVDDH (MAKE_BASE=TRUE) — PP3V0_JASPER_RX_AVDDH 50

ADAMS_LDO3 (SW CONTROL)
69 45 PP3V0_PENROSE (MAKE_BASE=TRUE) — PP3V0_PENROSE 23

ADAMS_LDO4 (SW CONTROL)
69 45 PP3V3_JASPER_TX_AVDDH (MAKE_BASE=TRUE) — PP3V3_JASPER_TX_AVDDH 50

ADAMS_LDO5 (SPARE)
72 45 ADAMS_LDO5_SPARE (MAKE_BASE=TRUE) — ADAMS_LDO5_SPARE 45 72

ADAMS_LDO6 (SW CONTROL)
69 45 PP2V85_WIDE_RCAM1_AVDDH1 (MAKE_BASE=TRUE) — PP2V85_WIDE_RCAM1_AVDDH1 48

ADAMS_LDO7 (SW CONTROL)
69 45 PP2V85_SWIDE_RCAM2_AVDDH1 (MAKE_BASE=TRUE) — PP2V85_SWIDE_RCAM2_AVDDH1 49

ADAMS_LDO8 (SW CONTROL)
69 45 PP1V215_RCAM_SWIDE_VDDL (MAKE_BASE=TRUE) — PP1V215_RCAM_SWIDE_VDDL 49

ADAMS_LDO9 (SW CONTROL)
69 45 PP1V215_RCAM_WIDE_VDDL (MAKE_BASE=TRUE) — PP1V215_RCAM_WIDE_VDDL 48

ADAMS_LDO10 (SPARE)
45 ADAMS_LDO10_SPARE (MAKE_BASE=TRUE) — ADAMS_LDO10_SPARE 1147

ADAMS_SW1 (SW CONTROL)
69 45 PP1V8_CAM_PMU1_IO_SW (MAKE_BASE=TRUE)
- PP1V8_CAM_PMU1_IO_SW 46
- PP1V8_CAM_PMU1_IO_SW 48
- PP1V8_CAM_PMU1_IO_SW 49
- PP1V8_CAM_PMU1_IO_SW 47 50

CHARGER MAIN
68 61 51 34 26 PPVCC_MAIN (MAKE_BASE=TRUE)
- PPVCC_MAIN 57
- PPVCC_MAIN 57
- PPVCC_MAIN 57
- PPVCC_MAIN 53 57 60
- PPVCC_MAIN 58
- PPVCC_MAIN 32
- PPVCC_MAIN 41
- PPVCC_MAIN 60
- PPVCC_MAIN 37
- PPVCC_MAIN 66
- PPVCC_MAIN 66
- PPVCC_MAIN 25
- PPVCC_MAIN 60 62 65
- PPVCC_MAIN 19 20
- PPVCC_MAIN 28 29 30 31
- PPVCC_MAIN 63 64
- PPVCC_MAIN 63
- PPVCC_MAIN 45
- PPVCC_MAIN 47

CHARGER HIGH
68 61 PPVCC_HIGH (MAKE_BASE=TRUE)
- PPVCC_HIGH 54 58
- PPVCC_HIGH 37
- PPVCC_HIGH 45

BATTERY
68 61 PPBATT_VCC (MAKE_BASE=TRUE) — PPBATT_VCC 64

USB POWER INPUT
68 PPVBUS_PROT (MAKE_BASE=TRUE) — PPVBUS_PROT 34 56 61

ATHENA_ON_BUF
68 58 PP1V8_ALWAYS (MAKE_BASE=TRUE) — PP1V8_ALWAYS 6 59 61

BACKLIGHT BOOST
68 66 PPLED_OUT (MAKE_BASE=TRUE) — PPLED_OUT 41

SYNC_MASTER=J317_MLB_B — SYNC_DATE=11/16/2018

PAGE TITLE

ALIASES: POWER