1. ALL RESISTANCE VALUES ARE IN OHMS, 0.1 WATT +/- 5%.
2. ALL CAPACITANCE VALUES ARE IN MICROFARADS.
3. ALL CRYSTALS & OSCILLATOR VALUES ARE IN HERTZ.

J217: MLB-B

LAST_MODIFICATION=Mon Oct 1 10:33:31 2018

REV	ECN	DESCRIPTION OF REVISION	CK APPD / DATE
5	0014262036	ENGINEERING RELEASED	2018-10-01

	PAGE	CSA	CONTENTS	SYNC	DATE
	1	1	TABLE OF CONTENTS		
	2	2	BLOCK DIAGRAM	J207B_MLB_B	03/25/2018
	3	4	BOM TABLES	J211_MLB_B	07/05/2018
4	5		SOC: MISC & ALIASES	J207B_MLB_B	07/30/2018
	5	6	SOC: JTAG,USB,XTAL	J211_MLB_B	07/05/2018
	6	7	SOC: PCIE	J211_MLB_B	07/05/2018
	7	8	SOC: MIPI	J211/MLB_B_6.14.0	09/18/2018
	8	9	SOC: LPDP	J211_MLB_B	07/05/2018
	9	10	SOC: SERIAL	J211_MLB_B	07/05/2018
	10	11	SOC: GPIO & UART	J211_MLB_B	07/05/2018
	11	12	SOC: AOP	J211_MLB_B	07/05/2018
	12	13	SOC: POWER (1/3)	J211_MLB_B	07/05/2018
	13	14	SOC: POWER (2/3)	J211_MLB_B	07/05/2018
	14	15	SOC: POWER (3/3)	J211_MLB_B	07/05/2018
15	16		SOC: BOTTOM SIDE DECAPS	J211_MLB_B_5.4.0	08/23/2018
16	17		NAND: S4E NAND	J211_MLB_B	07/05/2018
17	21		SENSOR: KOBOL, PHOS2	J211_MLB_B	07/05/2018
	18	22	TOUCH: KONA MASTER	J207B_MLB_B	03/25/2018
	19	23	TOUCH: KONA SLAVE	J207_MLB_B_ARUBA	03/05/2018
	20	24	TOUCH: GRAPE CONN	J207B_MLB_B	03/25/2018
	21	25	CAMERA: MIPI BRIDGE	J211_MLB_B_4.1.0	07/29/2018
	22	27	FLEX CONNS: CORNER 3	J207B_MLB_B	03/25/2018
	23	28	CAMERA: FRONT	J211_MLB_B	07/05/2018
24	30		AUDIO: CLIFDEN, BELFIELD	J211_MLB_B	07/05/2018
	25	31	FLEX CONNS: C4 & DMIC	J207B_MLB_B	03/25/2018
	26	32	AUDIO: SPEAKER AMPS (CN)	J211_MLB_B	07/05/2018
	27	35	IO: HYDRA	J211_MLB_B	07/05/2018
	28	37	IO: HOTBAR,SIM,XBAR	J207B_MLB_B	03/25/2018
	29	45	DISPLAY CONN	J207B_MLB_B	03/25/2018
	30	46	DISPLAY: EDP SUPPORT	J207B_MLB_B	03/25/2018
	31	47	SENSOR: MESA	J211_MLB_B	07/05/2018
	32	49	J217+J218 WiFi+BT_GNSS	WIFI_MLB_0.22.0	09/26/2018
	33	50	J217+J218: Diet Coke Primary Module	WIFI_MLB_0.22.0	09/26/2018
	34	51	J218: Remote FEMs	WIFI_MLB_0.22.0	09/26/2018
35	52		J218: Front End	WIFI_MLB_0.22.0	09/26/2018
36	80		ORION & J217-J218 UNIQUE	J207_MLB_B_ARUBA	03/05/2018
37	81		POWER: ATLAS (1/3)	MLB_B_5.1.0	08/15/2018
	38	82	POWER: ATLAS (2/3)	J211_MLB_B	07/05/2018
	39	83	POWER: ATLAS (3/3)	J211_MLB_B	07/05/2018
	40	85	POWER: CHARGER	J211_MLB_B	07/05/2018
	41	86	POWER: EXTERNAL SWITCHES	J211_MLB_B	07/05/2018
	42	88	POWER: USB PD	J211_MLB_B	07/05/2018
	43	89	POWER: BATTERY & ORION CONN	J207B_MLB_B	03/25/2018
44	90		SOC: DEBUG	J211_MLB_B	07/05/2018
	45	91	ALIASES: WLAN/BT	J211_MLB_B	07/05/2018
	46	92	BASEBAND UNIQUE	J207B_MLB_B	03/25/2018
	47	93	TEST: TPS/HOLES/FIDUCUALS	J211_MLB_B	07/05/2018
	48	95	TEST: EE TP/PP	J211_MLB_B	07/05/2018
	49	99	POWER: ALIASES	J211_MLB_B	07/05/2018
50	101		ANTENNA DIAGRAM	RADIO_MLB_0.11.0	10/01/2018

	PAGE	CSA	CONTENTS	SYNC	DATE
	51	102	BOM TABLES	RADIO_MLB_0.11.0	10/01/2018
	52	103	BBPMU: CONTROL	RADIO_MLB_0.11.0	10/01/2018
	53	104	BBPMU: RAILS	RADIO_MLB_0.11.0	10/01/2018
54	105		BB: INTERFACE	RADIO_MLB_0.11.0	10/01/2018
	55	106	BB: DDR PWR & JTAG	RADIO_MLB_0.11.0	10/01/2018
	56	107	BB: DIGITAL PWR	RADIO_MLB_0.11.0	10/01/2018
	57	108	XCVR: TX & GNSS	RADIO_MLB_0.11.0	10/01/2018
	58	109	XCVR: INTERFACE & PWR	RADIO_MLB_0.11.0	10/01/2018
	59	110	XCVR: PRX DRX	RADIO_MLB_0.11.0	10/01/2018
	60	111	HW CONFIG OPTIONS	RADIO_MLB_0.11.0	10/01/2018
	61	112	ET	RADIO_MLB_0.11.0	10/01/2018
	62	113	LB SPAD	RADIO_MLB_0.11.0	10/01/2018
	63	114	HB SPAD	RADIO_MLB_0.11.0	10/01/2018
	64	115	UHB LMB SPAD	RADIO_MLB_0.11.0	10/01/2018
65	116		LB DIVERSITY RECEIVE LNA	RADIO_MLB_0.11.0	10/01/2018
66	117		HB DIVERSITY RECEIVE LNA	RADIO_MLB_0.11.0	10/01/2018
67	118		LOWER ANTENNA & COUPLER	RADIO_MLB_0.11.0	10/01/2018
	68	119	UPPER ANTENNA FEEDS	RADIO_MLB_0.11.0	10/01/2018
	69	120	TEST POINTS	RADIO_MLB_0.11.0	10/01/2018
	70	121	VENUS	RADIO_MLB_0.11.0	10/01/2018
	71	122	SIM: ESIM	RADIO_MLB_0.11.0	10/01/2018
	72	123	18.8 TRIPLEXER & ANT1 & 2	RADIO_MLB_0.11.0	10/01/2018

SCH AND BOARD P/N

PART#	QTY	DESCRIPTION	REFERENCE DESIGNATOR(S)	CRITICAL	BOM OPTION
051-04064	1	SCHEM,MLB-B,NY,J217	SCH1	CRITICAL	
1820-01531		PCBF,MLB-B,NY,J217	PCB1	CRITICAL	

TABLE OF CONTENTS

SYNC_MASTER=J207_MLB_B_ARUBA SYNC_DATE=03/05/2018

DRAWING TITLE

SCHEM,MLB-B,NY,J218

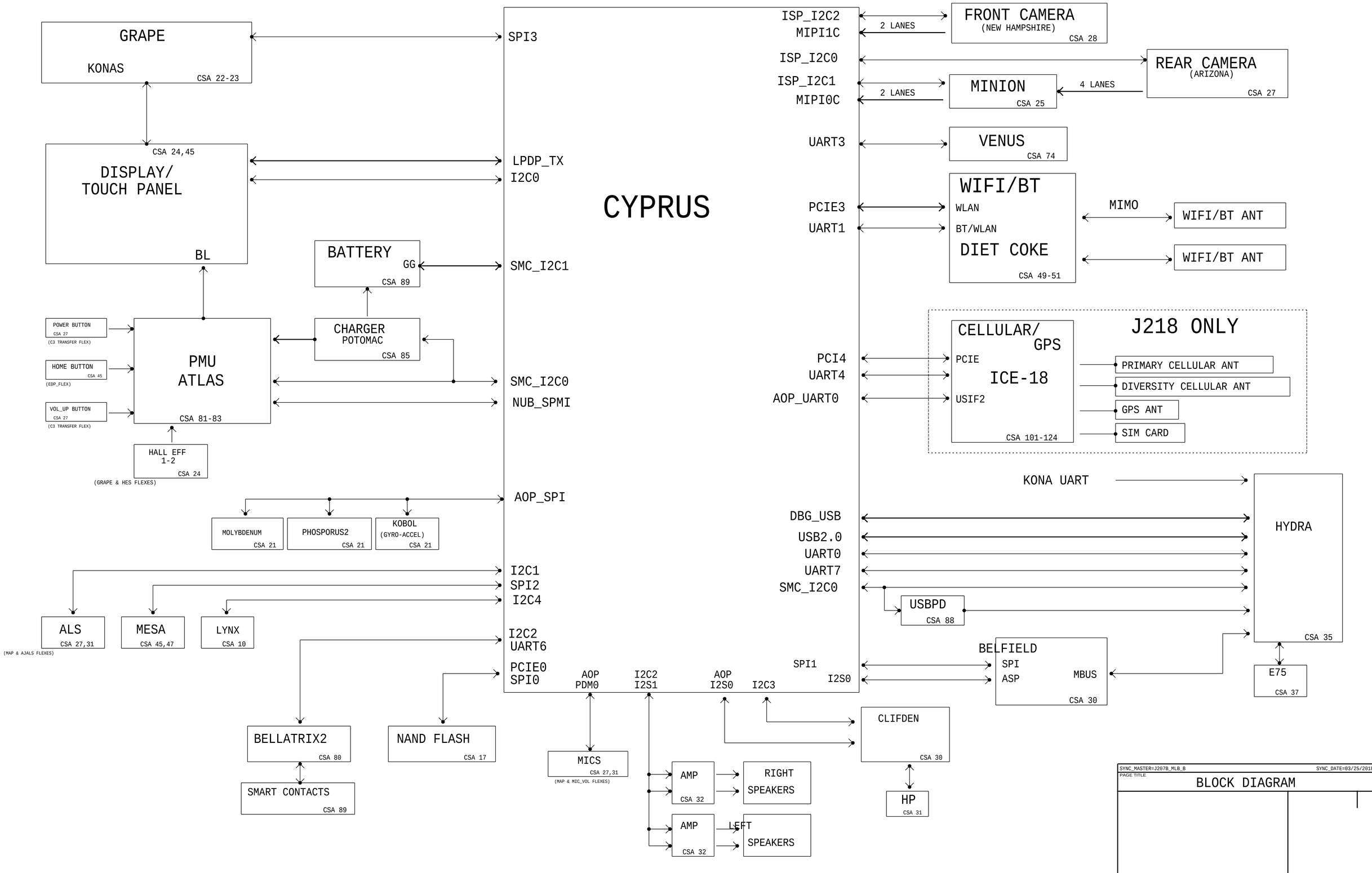
CYPRUS
GRAPE
KONAS
CSA 22-23
SPI3
CSA 24,45
DISPLAY/
TOUCH PANEL
BL
LPDP_TX
I2C0
BATTERY
GG
CSA 89
SMC_I2C1
POWER BUTTON
CSA 27
(C3 TRANSFER FLEX)
HOME BUTTON
CSA 45
(EDP_FLEX)
VOL_UP BUTTON
CSA 27
(C3 TRANSFER FLEX)
PMU
ATLAS
CSA 81-83
CHARGER
POTOMAC
CSA 85
SMC_I2C0
NUB_SPMI
HALL EFF
1-2
CSA 24
(GRAPE & HES FLEXES)
AOP_SPI
MOLYBDENUM
CSA 21
PHOSPORUS2
CSA 21
KOBOL
(GYRO-ACCEL)
CSA 21
I2C1
SPI2
I2C4
ALS
CSA 27,31
(MAP & AJALS FLEXES)
MESA
CSA 45,47
LYNX
CSA 10
I2C2
UART6
PCIE0
SPI0
BELLATRIX2
CSA 80
SMART CONTACTS
CSA 89
NAND FLASH
CSA 17
AOP
PDM0
MICS
CSA 27,31
(MAP & MIC_VOL FLEXES)
I2C2
I2S1
AOP
I2S0
I2C3
AMP
CSA 32
RIGHT
SPEAKERS
AMP
CSA 32
LEFT
SPEAKERS
ISP_I2C2
MIPI1C
2 LANES
FRONT CAMERA
(NEW HAMPSHIRE)
CSA 28
ISP_I2C0
REAR CAMERA
(ARIZONA)
CSA 27
ISP_I2C1
MIPI0C
2 LANES
MINION
CSA 25
4 LANES
UART3
VENUS
CSA 74
PCIE3
UART1
WIFI/BT
WLAN
BT/WLAN
DIET COKE
CSA 49-51
MIMO
WIFI/BT ANT
WIFI/BT ANT
J218 ONLY
PCI4
UART4
AOP_UART0
CELLULAR/
GPS
PCIE
ICE-18
USIF2
CSA 101-124
PRIMARY CELLULAR ANT
DIVERSITY CELLULAR ANT
GPS ANT
SIM CARD
KONA UART
DBG_USB
USB2.0
UART0
UART7
SMC_I2C0
HYDRA
CSA 35
USBPD
CSA 88
SPI1
I2S0
BELFIELD
SPI
ASP
MBUS
CSA 30
E75
CSA 37
CLIFDEN
CSA 30
HP
CSA 31
SYNC_MASTER=J207B_MLB_B
SYNC_DATE=03/25/2018
PAGE TITLE
BLOCK DIAGRAM

CKPLUS WAIVE TABLE

CKPLUS RULE EXCEPTIONS	REQUIRED
SCHEMATIC DEFINED CONSTRAINTS (YES/NO)	NO

ALTERNATES

	PART NUMBER	ALTERNATE FOR PART NUMBER	BOM OPTION	REF DES	COMMENTS:
	371S0730	371S00172			D82P0
155S00200		155S00400		FL2860	
	155S00194	155S00400			FL2860
	128S00067	128S00094			C81C0-2
	128S00069	128S00094			C81C0-2
	155S0755	155S00341			FL2700-2,FL4540,FL4710
	131S00172	131S00164			220PF,16V,01005
131S00173		131S00164		C2743,C2801,	..
	376S00159	376S00311			Q8061
	377S0116	377S00132			DZ3540
	138S00116	138S00071			C810D-E,...
	138S00117	138S00071			C810D-E,...
	138S00143	138S00144			C81A0-4,...
	138S00163	138S00144			C81A0-4,...
138S00138		138S00139		C133A-B,...	
	138S00164	138S00139			C133A-B,...
	138S00084	138S00060			C8563-69,...
	152S01037	152S00887			L8101-03,...
	132S00229	132S00010			C8555-57
152S00963		152S00885		L8190,A0	
	372S0194	372S0187			Q3790,Q8990
	376S00319	376S00104			Q2201
	376S00182	376S00126			Q8580
	155S0664	155S00018			FL2742,48,...
152S00964		152S00888		L8121,41	
	152S01003	152S00888			L8121,41

NOMAN'S UPDATED LIST

	131S00299	131S00118			
	132S00232	132S00014			
138S00148		138S00149			
	138S00150	138S00149			
	138S00151	138S00149			
	138S00049	138S0831			
	138S00086	138S0884			
	155S0660	155S0513			
197S00120		197S00118			
	371S0685	371S00176			
	376S1245	376S1102			

SOC

PART#	QTY	DESCRIPTION	REFERENCE DESIGNATOR(S)	CRITICAL	BOM OPTION
339S00544	1	POP,CYPRUS+3GB 18NM,B1,M,DEV,CSP1262	U0600	CRITICAL	

PART NUMBER	ALTERNATE FOR PART NUMBER	BOM OPTION	REF DES	COMMENTS:
339S00545	339S00544	U0600		HYNIX
339S00546	339S00544	U0600		SAMSUNG

NAND

BEST FLASH CONFIGURATIONS (64GB)

PART#	QTY	DESCRIPTION	REFERENCE DESIGNATOR(S)	CRITICAL	BOM OPTION
335S00286	1	NAND,3DV3,64GBT,S4E,256G,SD,SLGA110	U1700	CRITICAL	BEST

PART NUMBER	ALTERNATE FOR PART NUMBER	BOM OPTION	REF DES	COMMENTS:
335S00359	335S00286		U1700	TOSHIBA

ULTIMATE FLASH CONFIGURATIONS (128GB)

PART#	QTY	DESCRIPTION	REFERENCE DESIGNATOR(S)	CRITICAL	BOM OPTION
335S00357	1	NAND,3DV3,128GBT,S4E,256G,T,SLGA110	U1700	CRITICAL	ULTIMATE

PART NUMBER	ALTERNATE FOR PART NUMBER	BOM OPTION	REF DES	COMMENTS:
335S00246	335S00357	U1700	WD	

SUPREME FLASH CONFIGURATIONS (256GB)

PART#	QTY	DESCRIPTION	REFERENCE DESIGNATOR(S)	CRITICAL	BOM OPTION
335S00247	1	NAND,3DV3,256GBT,S4E,256G,SD,SLGA110	U1700	CRITICAL	SUPREME

PART NUMBER	ALTERNATE FOR PART NUMBER	BOM OPTION	REF DES	COMMENTS:
335S00358	335S00247	U1700	TOSHIBA	

EXTREME FLASH CONFIGURATIONS (512GB)

PART#	QTY	DESCRIPTION	REFERENCE DESIGNATOR(S)	CRITICAL	BOM OPTION
335S00339	1	NAND,3DV4,512GBT,S4E,512G,SD,SLGA110	U1700	CRITICAL	EXTREME

PART NUMBER	ALTERNATE FOR PART NUMBER	BOM OPTION	REF DES	COMMENTS:
335S00343	335S00339	U1700	HYNIX	

CCG2

PART#	QTY	DESCRIPTION	REFERENCE DESIGNATOR(S)	CRITICAL	BOM OPTION
341S01186	1	PRGM ASSY,IC,CCG2,FW,CYPRESS,V0.3,CSP20	U8809	CRITICAL	

KOBOL

PART#	QTY	DESCRIPTION	REFERENCE DESIGNATOR(S)	CRITICAL	BOM OPTION
338S00367	1	IC,KOBOL,BMI282AA,LGA16	U2150	CRITICAL	KOBOL

SYNC_MASTER=J211_MLB_B SYNC_DATE=07/05/2018

PAGE TITLE

BOM TABLES

BOOT CONFIG ID

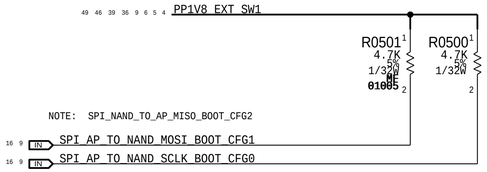

BOOT_CFG[2:0]	MODE
000	SPI0 NOR
001	SPI0 NOR TEST
(PRODUCTION) ---> 010	SPI0 NAND
CURRENT SETTING (PROTO) ---> 011	SPI0 NAND TEST
100	SPI0 NOR (40MHZ)
101	SPI0 NOR (40MHZ) TEST
110	SPI0 NOR (6MHZ)
111	SPI0 NOR (6MHZ) TEST

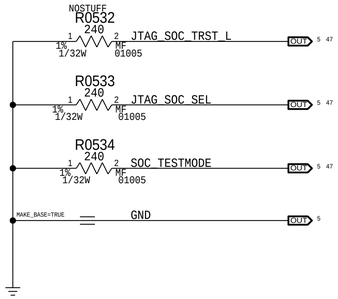

BOARD REVISION

NOTE: STUFFING RESISTOR MEANS 1

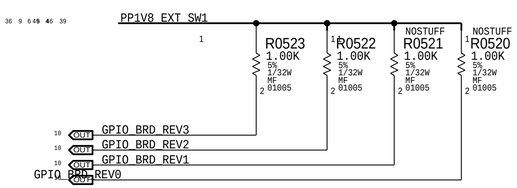

BRD_REV[3-0]	
1111	P1 - NO RCAM SUPPORT
1110	P1 - RCAM SUPPORT
1101	P2 (SKIPPED)
CURRENT SETTING ---> 1100	EVT
1011 TBD	
1010	TBD

S/W READ FLOW

1. SET GPIO AS INPUT
2. DISABLE PU AND ENABLE PD
3. READ

I2C0

DEVICE	8-BIT	7-BIT
TCON(HIBISCUS)	0X18 - 0X27	
TCON MICRO	0XAC	0X56
TCON TEMP	0X48 - 0X4F	

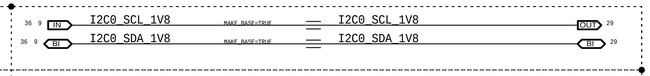

I2C1

DEVICE	8-BIT	7-BIT
ALS - C4	0X52	0X29
ALS - C3	0X72	0X39

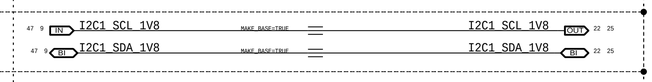

I2C2

DEVICE	8-BIT	7-BIT
SKR AMP CN R	0X72	0X39
SKR AMP CN L	0X74	0X3A
BELLATRIX	0X26	0X13

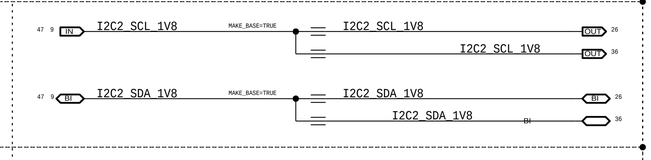

I2C3

DEVICE	8-BIT	7-BIT
CODEC	0X90	0X48
HYDRA	0X34	0X1A

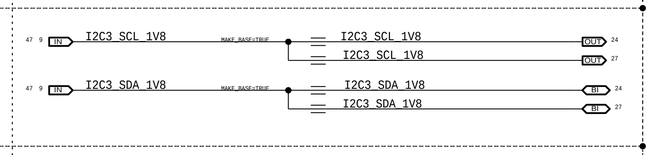

I2C4

DEVICE	8-BIT	7-BIT
LYNX	0XXX	0XXX

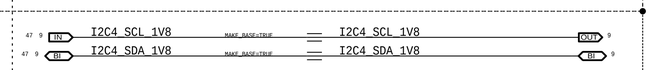

AOP I2C M0

NOT USED

AOP I2C M1

NOT USED

ISP I2C0

DEVICE	8-BIT	7-BIT
RCAM	0X20	0X10

ISP I2C1

DEVICE	8-BIT	7-BIT
MINION	0X??	0X??

ISP I2C2

DEVICE	8-BIT	7-BIT
FCAM	0X20	0X10

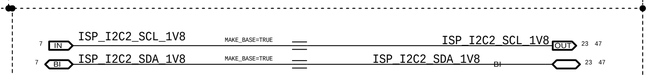

ISP I2C3

NOT USED

SMC I2C0

DEVICE	8-BIT	7-BIT
ATLAS	0X78	0X3C
POTOMAC	0XEA	0X75
USBPD	0X24	0X12

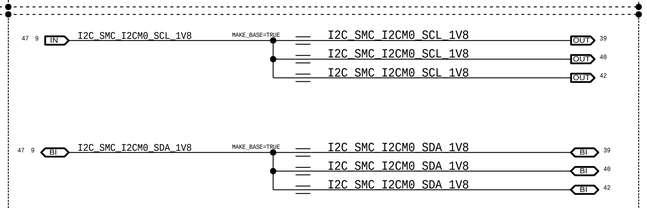

SMC I2C1

DEVICE	8-BIT	7-BIT
GASGAUGE	0XAA	0X55

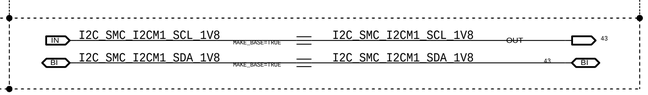

SYNC_MASTER=J207B_MLB_B SYNC_DATE=07/30/2018

PAGE TITLE

SOC: MISC & ALIASES

SOC - USB, JTAG, XTAL

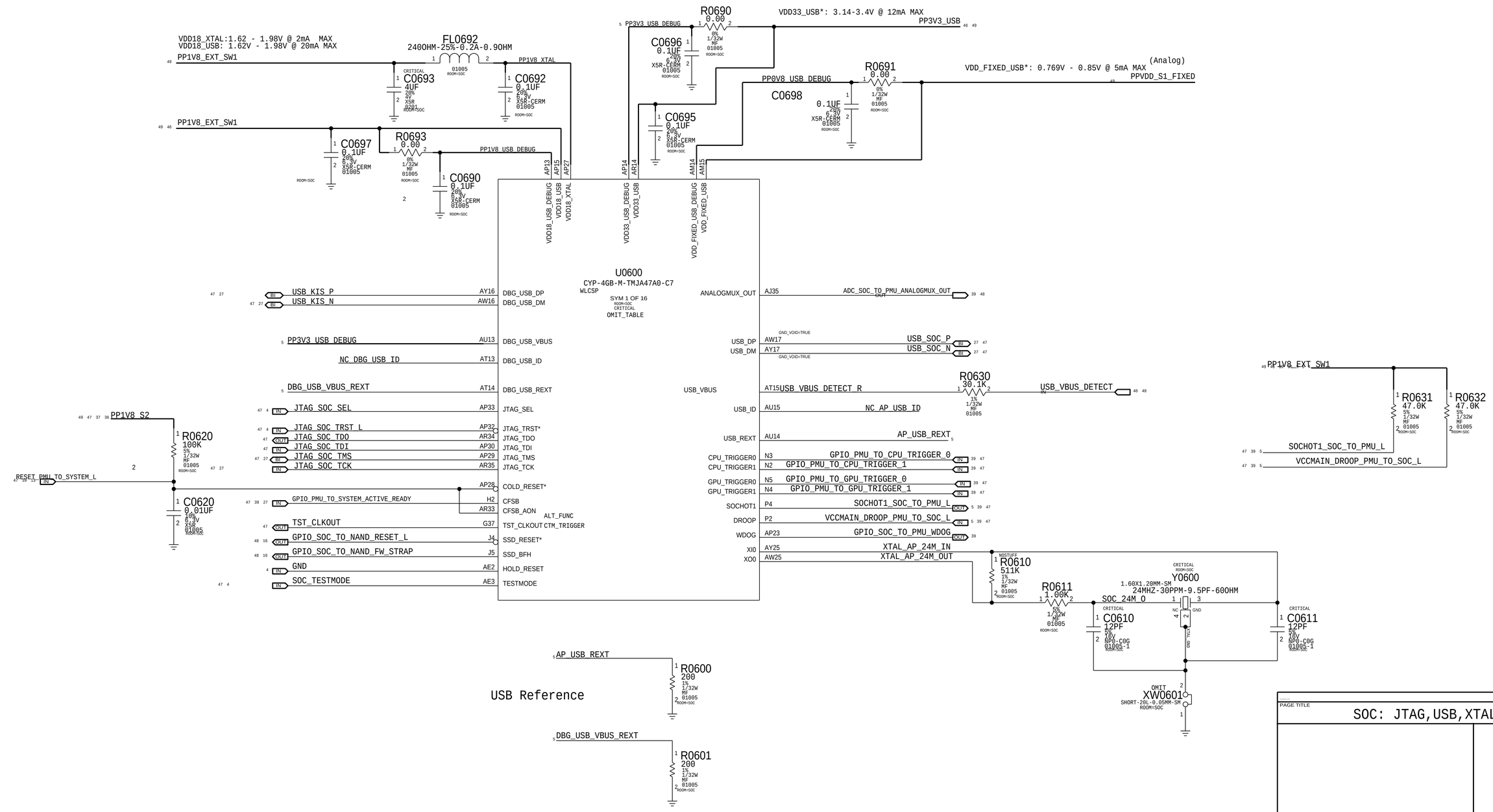

PAGE TITLE

SOC: JTAG,USB,XTAL

SOC - PCIE

VDD12_PCIE:1.14V - 1.26V @ 60mA MAX
VDD12_PCIE_REFBUF:1.08V - 1.26V @ 20mA MAX

PP1V2_SOC — C0799 2.2UF 20% 6.3V X5R-CERM 0201 ROOM=SOC (CRITICAL)
R0795 0.00 0% 1/32W MF 01005 ROOM=SOC — PP1V2_SOC_PCIE_REFBUF — C0798 0.1UF 20% 6.3V X5R-CERM 01005 ROOM=SOC

VDD_FIXED_PCIE:0.769V - 0.85V @ 60mA MAX
VDD_FIXED_PCIE_REFBUF:0.769V - 0.85V @ 50mA MAX
PPVDD_S1_FIXED — C0791 2.2UF 20% 6.3V X5R-CERM 0201 (CRITICAL)
C0793 0.1UF 20% 6.3V X5R-CERM 01005 ROOM=SOC
R0794 0.00 0% 1/32W MF 01005 ROOM=SOC — PP0V8_SOC_FIXED_PCIE_REFBUF — C0794 0.1UF 20% 6.3V X5R-CERM 01005 ROOM=SOC

U0600
CYP-4GB-M-TMJA47A0-C7
WLCSP
SYM 2 OF 16

VDD12_PCIE: AM29, AM31
VDD12_PCIE_REFBUF: AL26, AK27
VDD_FIXED_PCIE0: AL28
VDD_FIXED_PCIE1: AL30
VDD_FIXED_PCIE_REFBUF: AL27

PCIE LINK 0

PCIE_NAND1_TO_SOC_CLKREQ_L (BI)	U37	PCIE_CLKREQ0*	
PCIE_SOC_TO_NAND1_REFCLK_P (OUT)	AW19	PCIE_REF_CLK0_P	
PCIE_SOC_TO_NAND1_REFCLK_N (OUT)	AY19	PCIE_REF_CLK0_N	
PCIE_NAND1_TO_SOC_TX_P (IN)	AY27	PCIE_RX0_P	
PCIE_NAND1_TO_SOC_TX_N (IN)	AW27	PCIE_RX0_N	
PCIE_SOC_TO_NAND1_TX_P (OUT) — C0700 0.22UF 10% CER-X5R 01005 6.3V (CRITICAL, GND_VOID=TRUE)	AU26	PCIE_TX0_P	
PCIE_SOC_TO_NAND1_TX_N (OUT) — C0701 0.22UF 10% CER-X5R 01005 6.3V (CRITICAL, GND_VOID=TRUE)	AV26	PCIE_TX0_N	
PCIE_SOC_TO_NAND1_RESET_L (OUT)	T36	PCIE_PERST0*	

NAND LINK

PCIE LINK 3

PCIE_CLKREQ3*	U34	PCIE_WLAN_TO_SOC_CLKREQ_L (BI)	
PCIE_REF_CLK3_P	AY22	PCIE_SOC_TO_WLAN_REFCLK_P (OUT)	
PCIE_REF_CLK3_N	AW22	PCIE_SOC_TO_WLAN_REFCLK_N (OUT)	
PCIE_RX3_P	AY33	PCIE_WLAN_TO_SOC_TX_P (IN)	
PCIE_RX3_N	AW33	PCIE_WLAN_TO_SOC_TX_N (IN)	
PCIE_TX3_P	AU32	PCIE_SOC_TO_WLAN_TX_C_P — C0702 0.1UF 20% X5R-CERM 01005 6.3V (CRITICAL, GND_VOID=TRUE) — PCIE_SOC_TO_WLAN_TX_P (OUT)	
PCIE_TX3_N	AV32	PCIE_SOC_TO_WLAN_TX_C_N — C0703 0.1UF 20% X5R-CERM 01005 6.3V (CRITICAL, GND_VOID=TRUE) — PCIE_SOC_TO_WLAN_TX_N (OUT)	
PCIE_PERST3*	R37	PCIE_SOC_TO_WLAN_RESET_L (OUT)	

LINK3

NC_PCIE1_CLKREQ1_L	U36	PCIE_CLKREQ1* (Input)	PCIE_CLKREQ2* U35 — NC_PCIE2_CLKREQ2_L
NC_PCIE1_REF_CLK_P	AW20	PCIE_REF_CLK1_P	PCIE_REF_CLK2_P AW21 — NC_PCIE2_REF_CLK_P
NC_PCIE1_REF_CLK_N	AY20	PCIE_REF_CLK1_N	PCIE_REF_CLK2_N AY21 — NC_PCIE2_REF_CLK_N
NC_PCIE1_RX1_P	AY29	PCIE_RX1_P	PCIE_RX2_P AY31 — NC_PCIE2_RX1_P
NC_PCIE1_RX1_N	AW29	PCIE_RX1_N	PCIE_RX2_N AW31 — NC_PCIE2_RX1_N
NC_PCIE1_TX1_P	AU28	PCIE_TX1_P	PCIE_TX2_P AU30 — NC_PCIE2_TX1_P
NC_PCIE1_TX1_N	AV28	PCIE_TX1_N	PCIE_TX2_N AV30 — NC_PCIE2_TX1_N
NC_PCIE1_PERST1_L	T35	PCIE_PERST1*	PCIE_PERST2* T34 — NC_PCIE2_PERST2_L

LINK1 LINK2

PCIE_RCAL_POS AT31 — R0740 200 1% 1/32W MF 01005 ROOM=SOC — PCIE_RCAL_NEG AR31 — C0740 10PF 5% 16V CERM 01005 ROOM=SOC (CRITICAL)

PCIE_RCAL_P			
PCIE_RCAL_N			
PCIE_CLKREQ4*	T37	PCIE_BB_TO_SOC_CLKREQ_L (BI)	
PCIE_REF_CLK4_P	AY23	PCIE_SOC_TO_BB_REFCLK_P (OUT)	
PCIE_REF_CLK4_N	AW23	PCIE_SOC_TO_BB_REFCLK_N (OUT)	
PCIE_RX4_P	AY35	PCIE_BB_TO_SOC_TX_P (IN)	
PCIE_RX4_N	AW35	PCIE_BB_TO_SOC_TX_N (IN)	
PCIE_TX4_P	AU34	PCIE_SOC_TO_BB_TX_C_P (OUT)	
PCIE_TX4_N	AV34	PCIE_SOC_TO_BB_TX_C_N (OUT)	
PCIE_PERST4*	R35	PCIE_SOC_TO_BB_RESET_L (OUT)	

LINK4

PCIE LINK 4

PCIe BB CLKREQ PU on BB domain
PCIe Clock Request Pull-Ups

PP1V8_EXT_SW1 — R0700 100K 5% 1/32W MF 01005 ROOM=SOC — R0730 1/32W MF 01005 ROOM=SOC
PCIE_NAND1_TO_SOC_CLKREQ_L
PCIE_WLAN_TO_SOC_CLKREQ_L

PCIe Reset Pull-Downs

PCIE_SOC_TO_WLAN_RESET_L
PCIE_SOC_TO_NAND1_RESET_L
R0701 100K 5% 1/32W MF 01005 ROOM=SOC — R0731 100K 5% 1/32W MF 01005 ROOM=SOC

SYNC_MASTER=J211_MLB_B SYNC_DATE=07/05/2018
PAGE TITLE
SOC: PCIE

SOC - MIPI

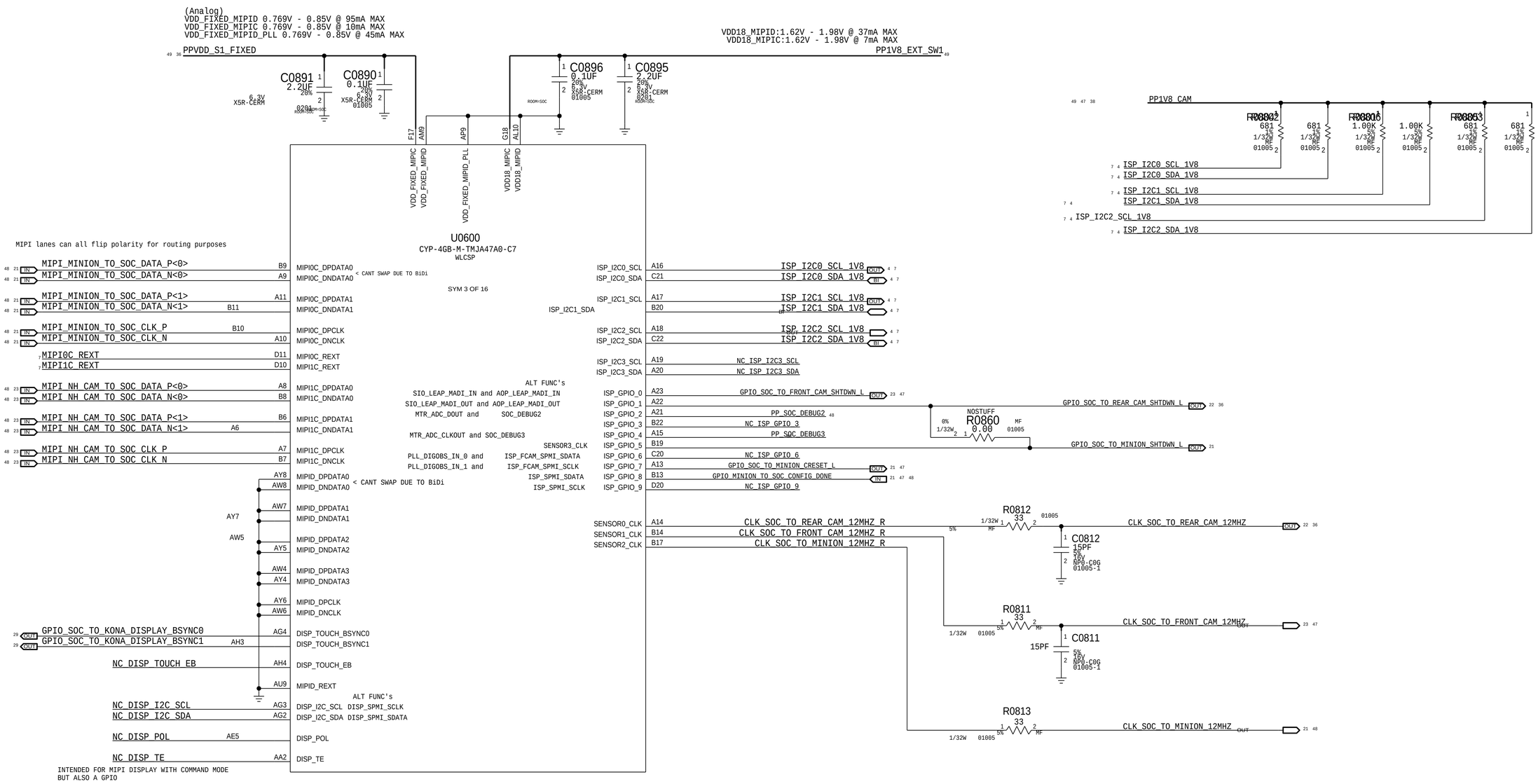

MIPI Reference

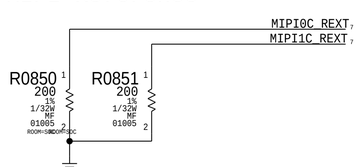

SYNC_MASTER=J211/MLB_B_6.14.0 SYNC_DATE=09/18/2018

PAGE TITLE

SOC: MIPI

SOC - LPDP

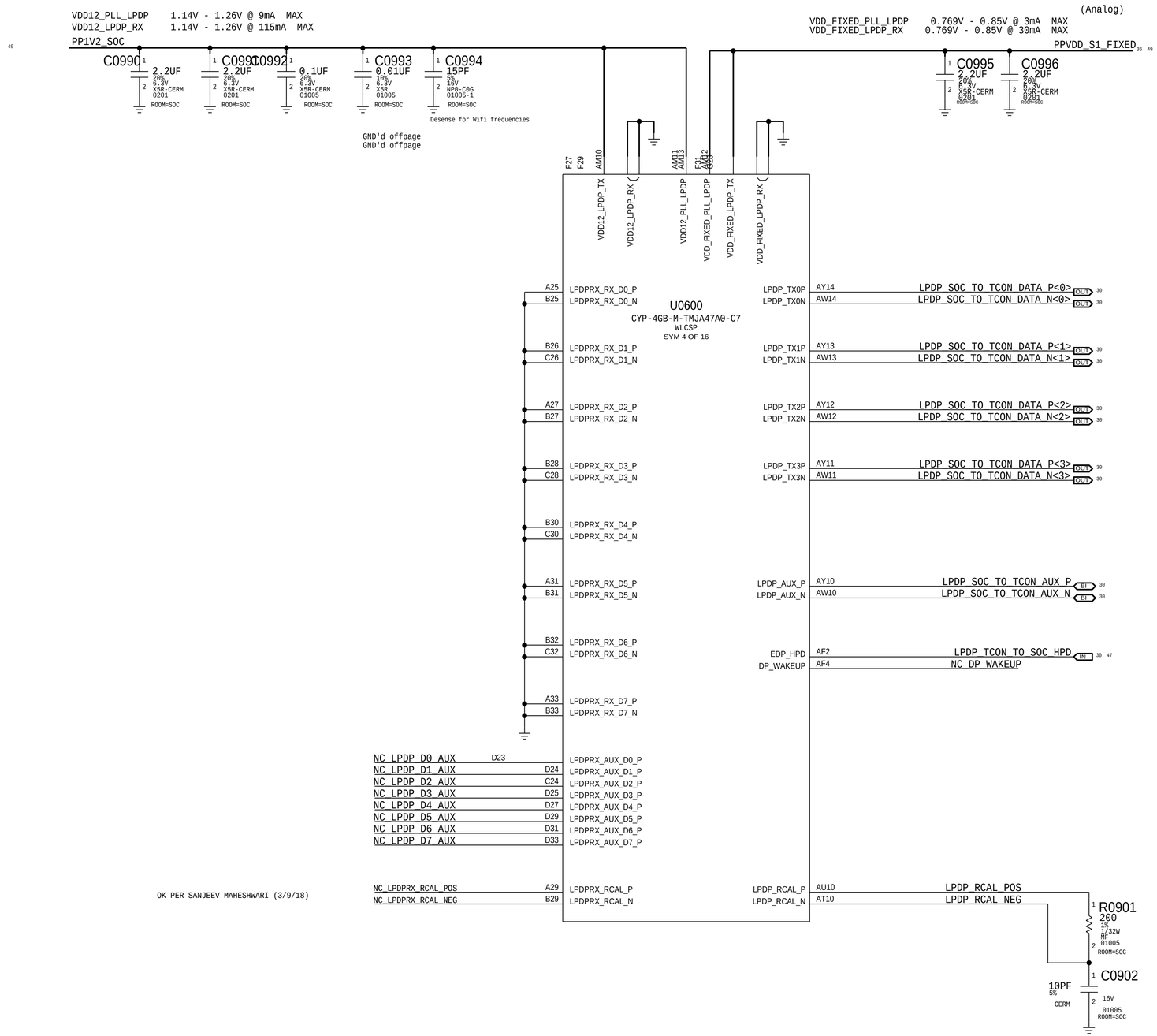

OK PER SANJEEV MAHESHWARI (3/9/18)

PAGE TITLE

SOC: LPDP

SOC - SERIAL INTERFACES

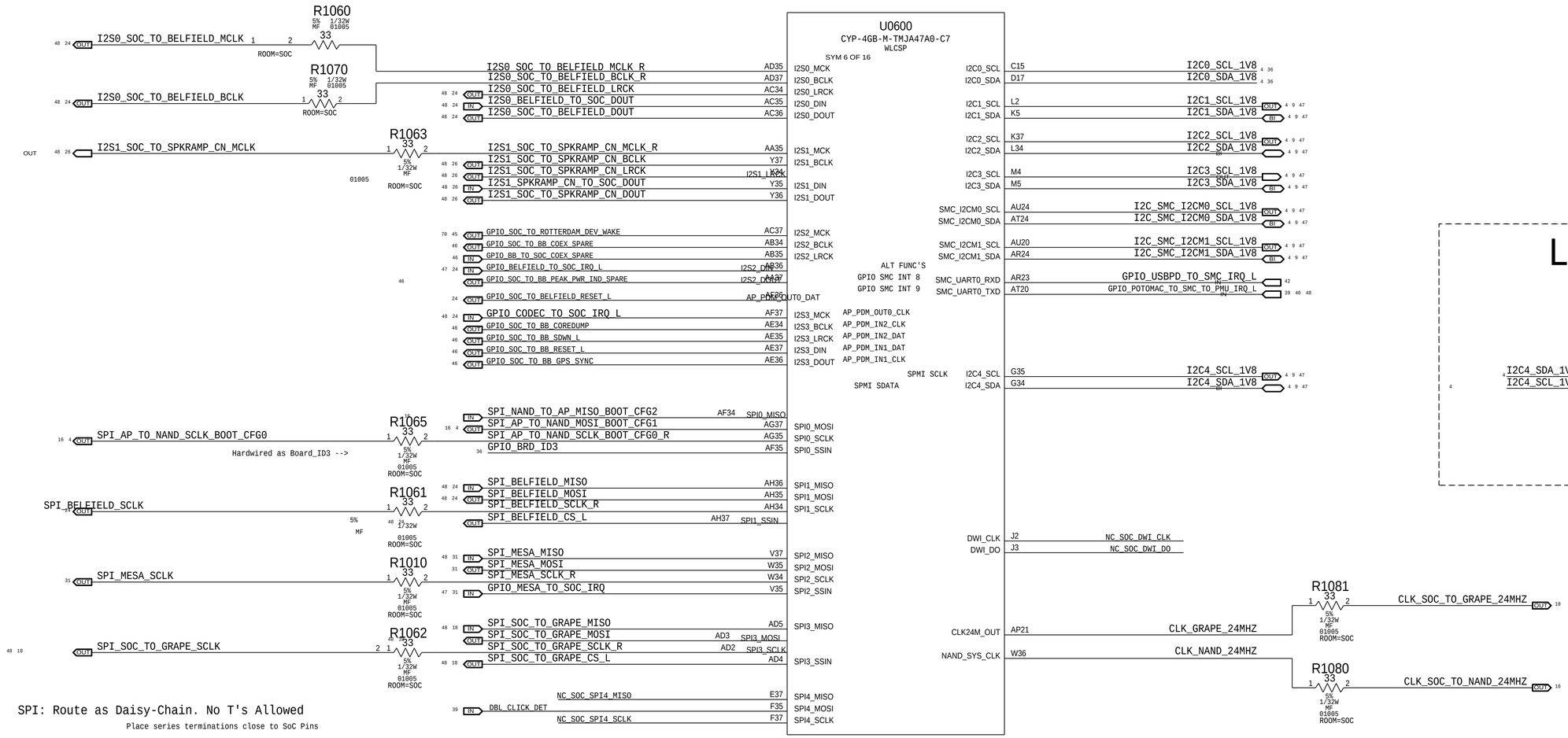

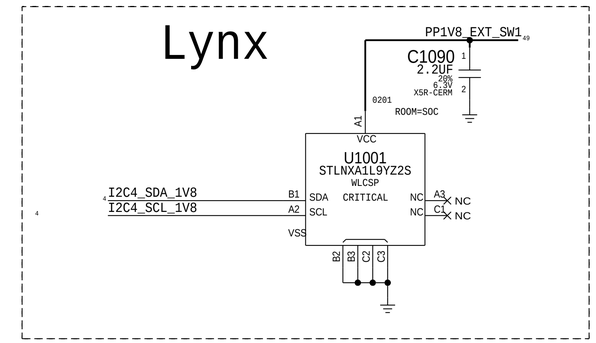

SMC I2C PULL-UPS

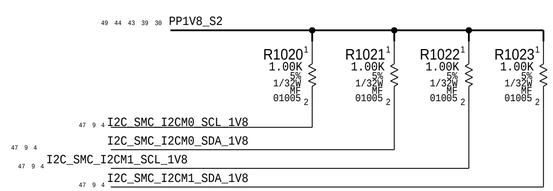

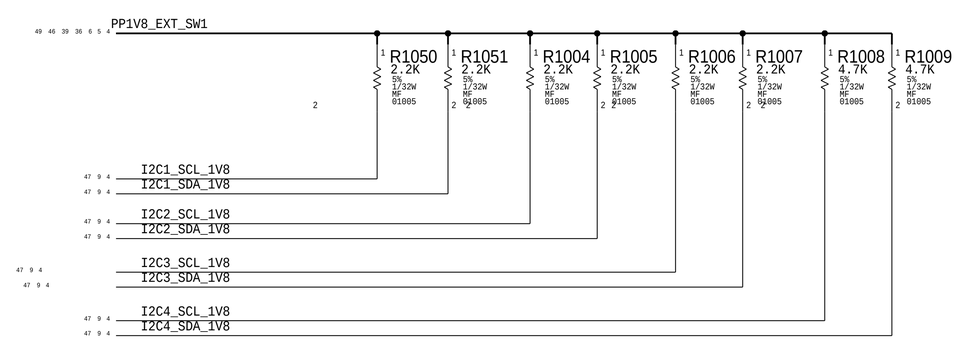

PAGE TITLE

SOC: SERIAL

SOC - GPIO INTERFACES

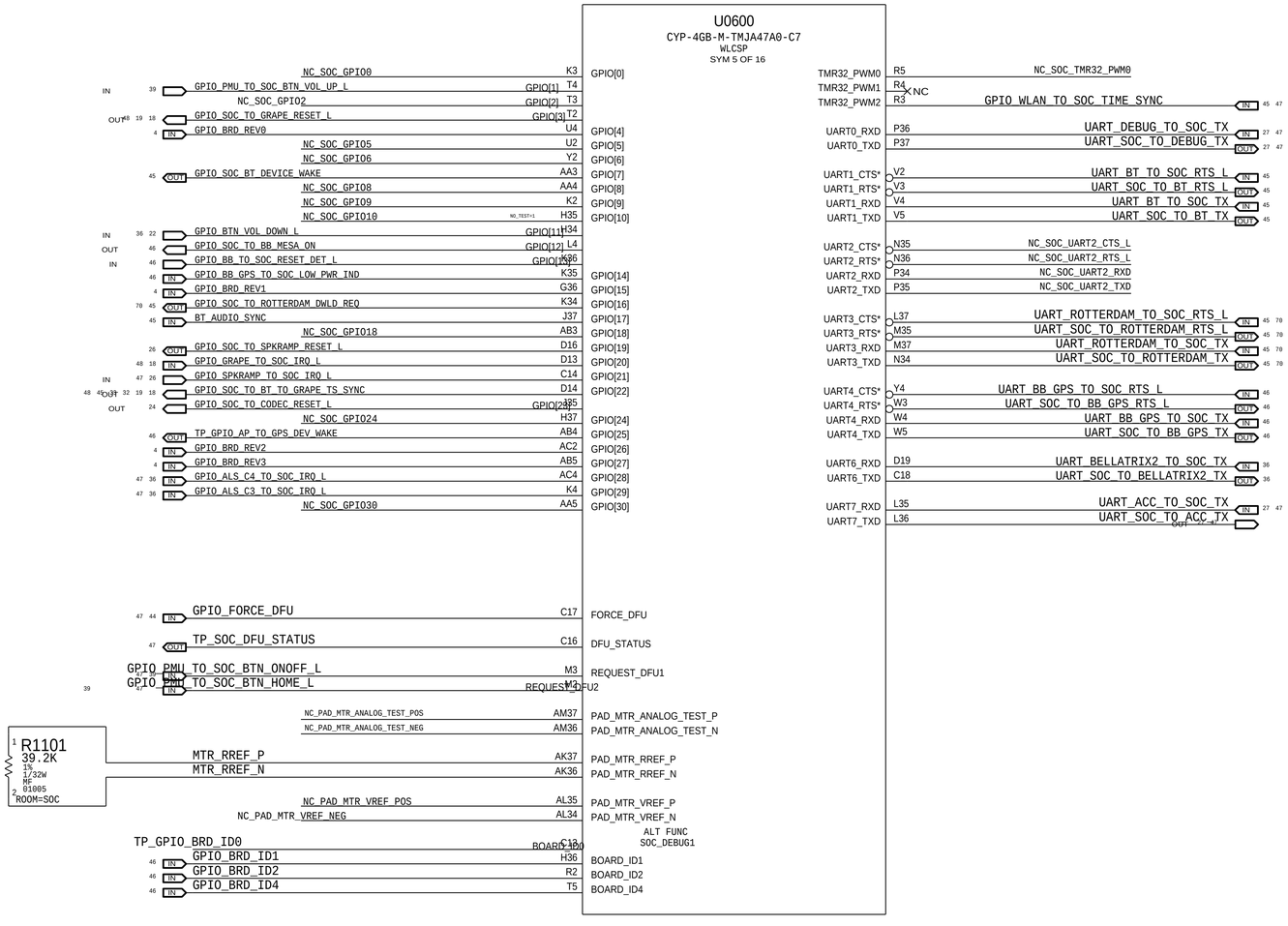

PAGE TITLE

SOC: GPIO & UART

SOC - AOP

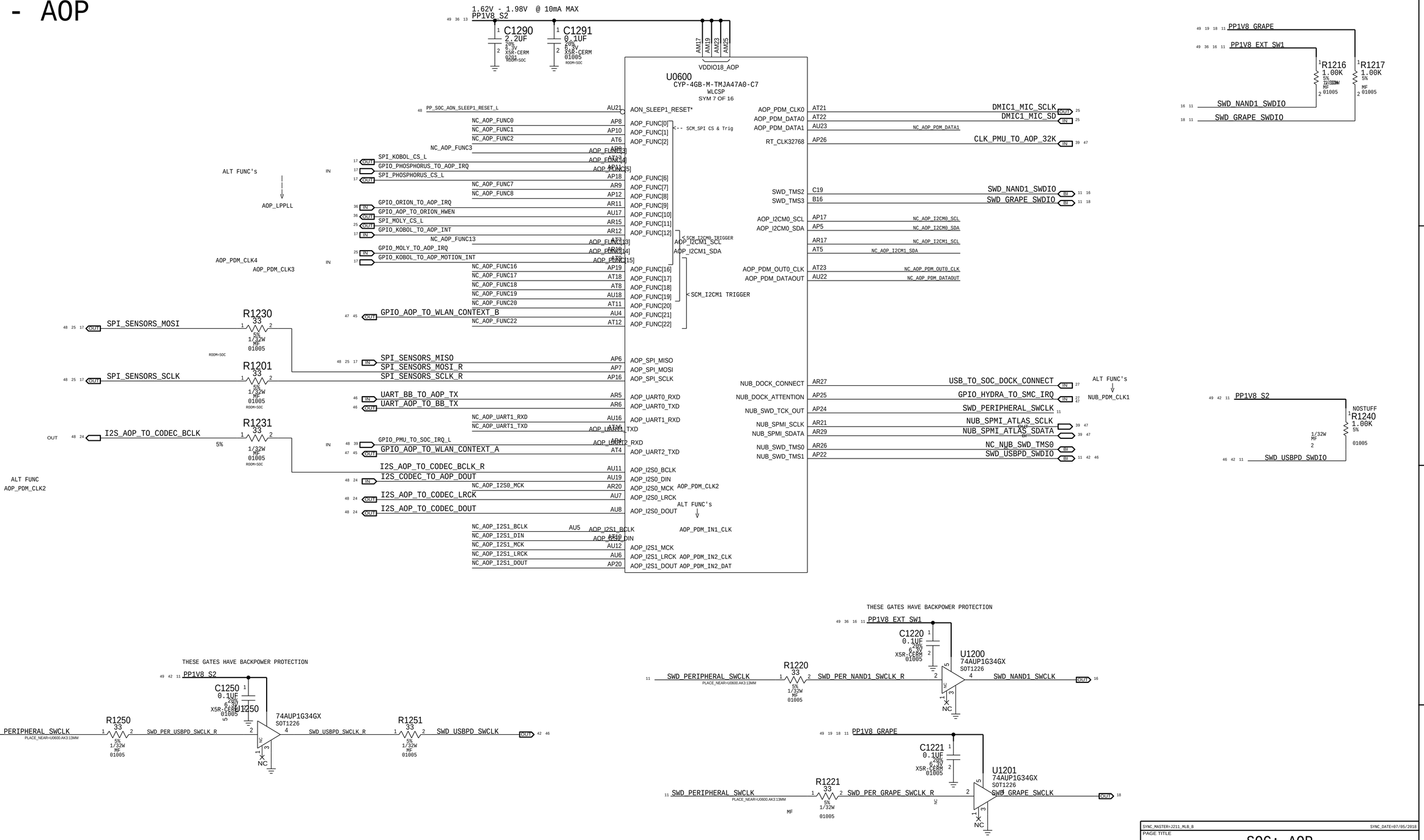

SYNC_MASTER=J211_MLB_B SYNC_DATE=07/05/2018

PAGE TITLE

SOC: AOP

SOC - CPU, GPU & SOC RAILS

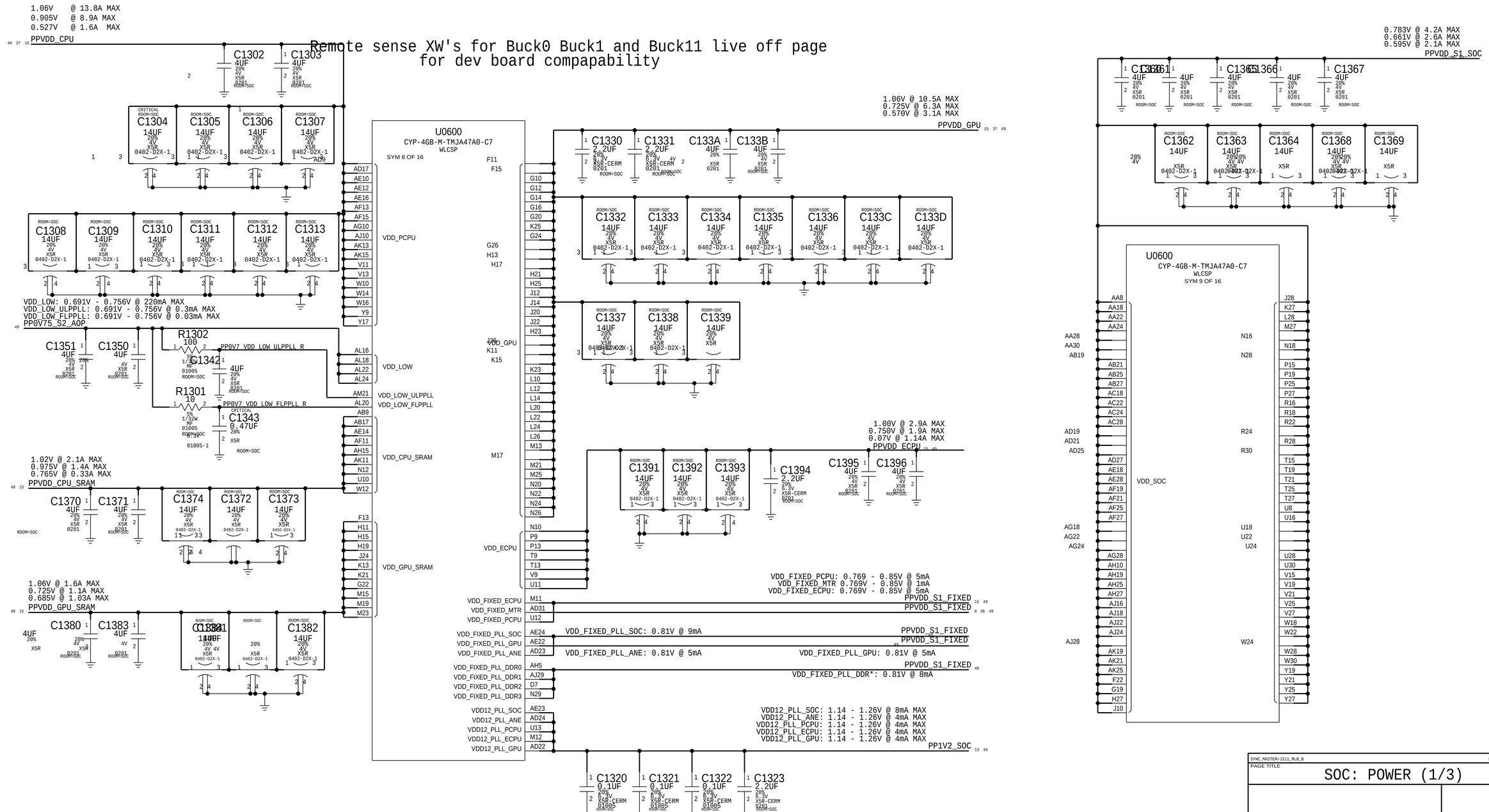

SYNC_MASTER=J211_MLB_B SYNC_DATE=07/05/2018

PAGE TITLE

SOC: POWER (1/3)

SOC - CPU, GPU & SOC RAILS

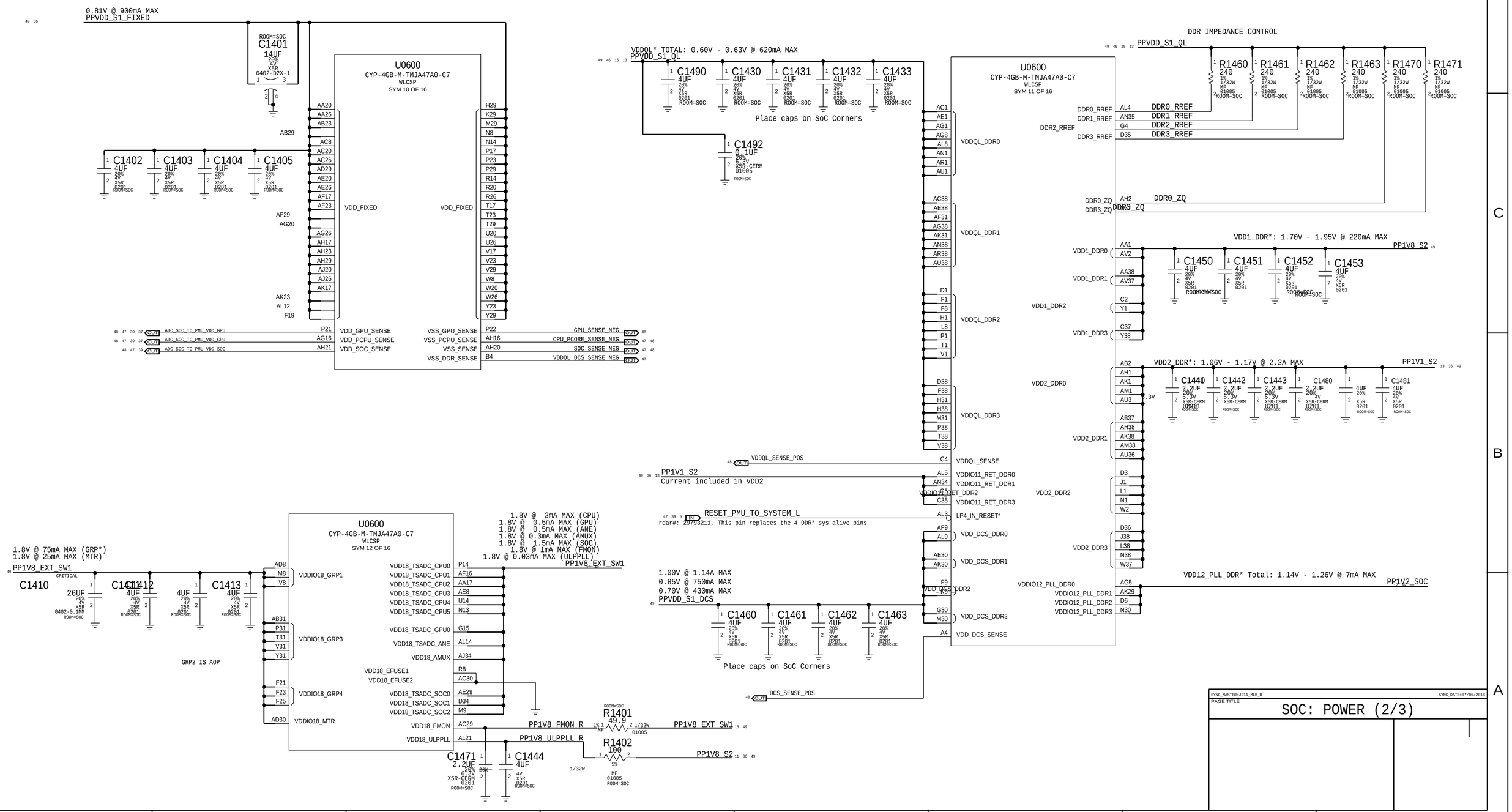

SYNC_MASTER=J211_MLB_B SYNC_DATE=07/05/2018

PAGE TITLE

SOC: POWER (2/3)

SOC - POWER SUPPLIES

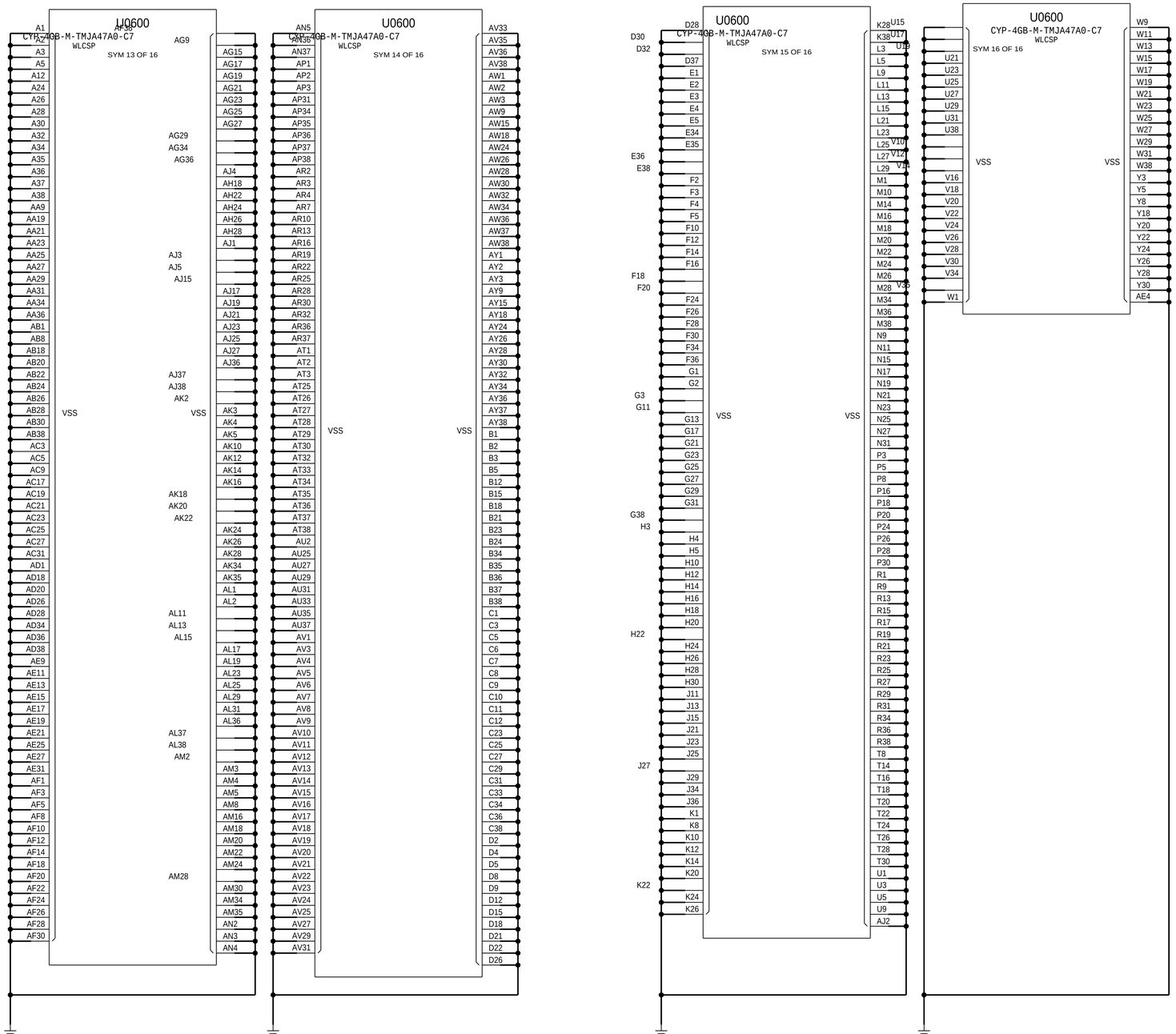

PAGE TITLE

SOC: POWER (3/3)

BOTTOM SIDE SOC CAPS

0.1UF = 132S00238 (0201, 0.11MM)

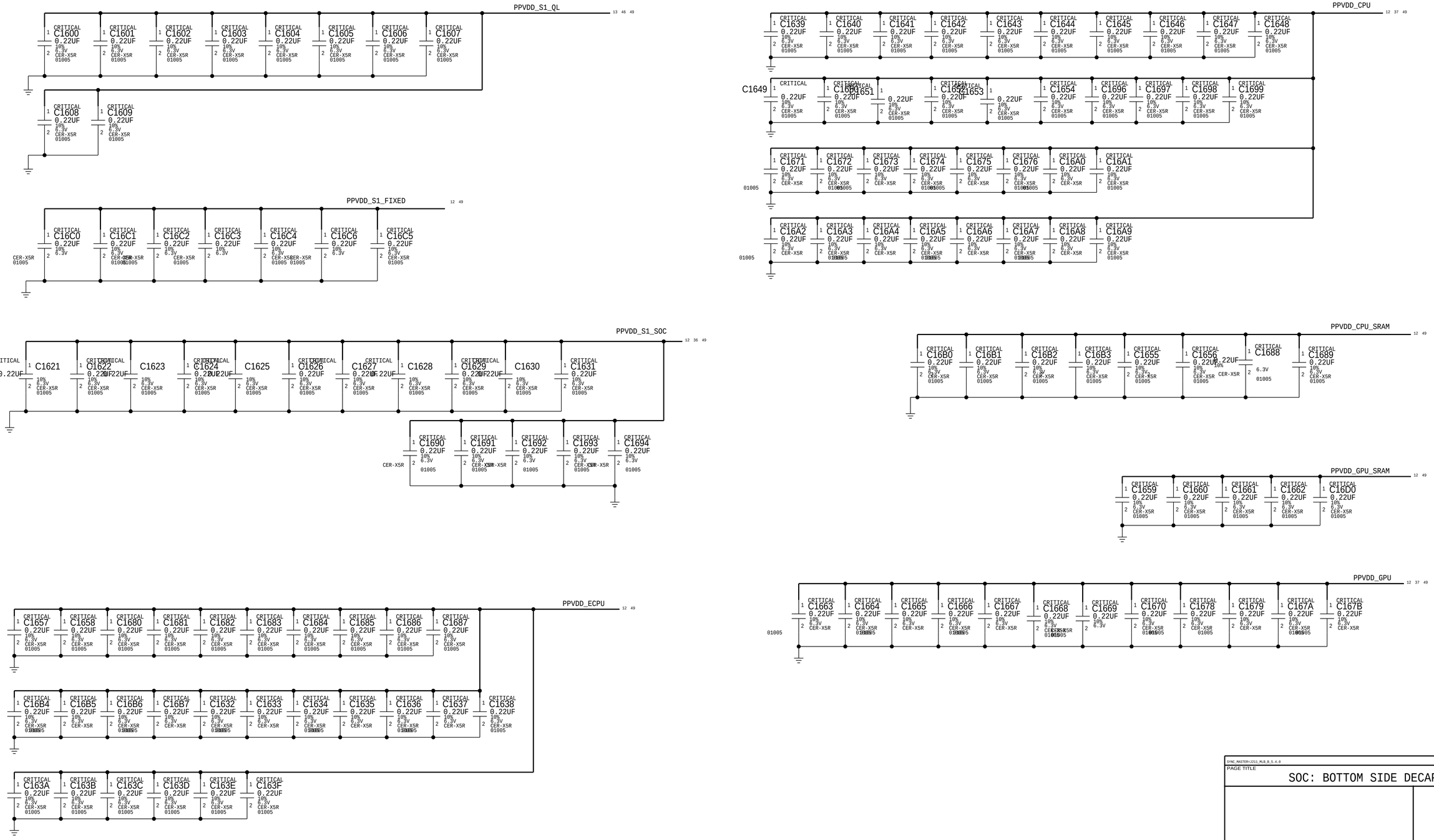

SYNC_MASTER=J251_MLB_8_5_4_0 SYNC_DATE=08/23/2018

PAGE TITLE

SOC: BOTTOM SIDE DECAPS

S4E NAND

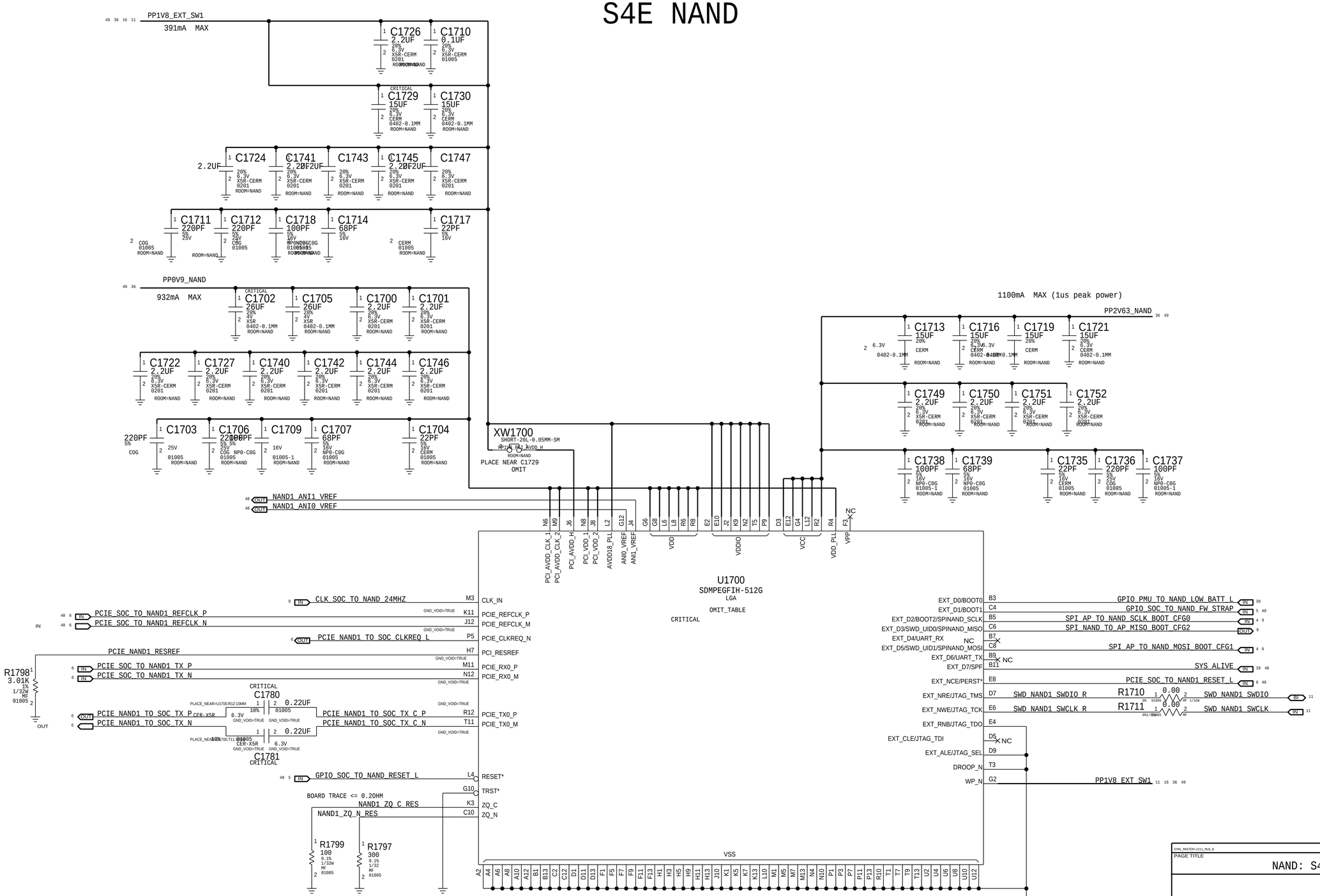

PAGE TITLE

NAND: S4E NAND

SENSORS

PART NUMBER	ALTERNATE FOR PART NUMBER	BOM OPTION	REF DES	COMMENTS:
155S00016	155S0686		FL2120,ECT	RDAR://PROBLEM/15809407

KOBOL - ACCEL & GYRO

APN: 338S00367

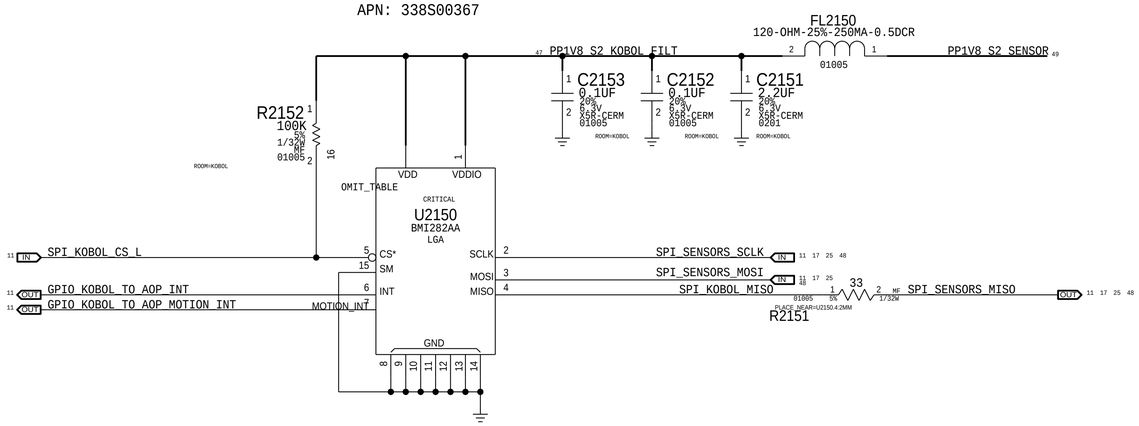

PHOSPHORUS2

BOSCH APN: 338S00334

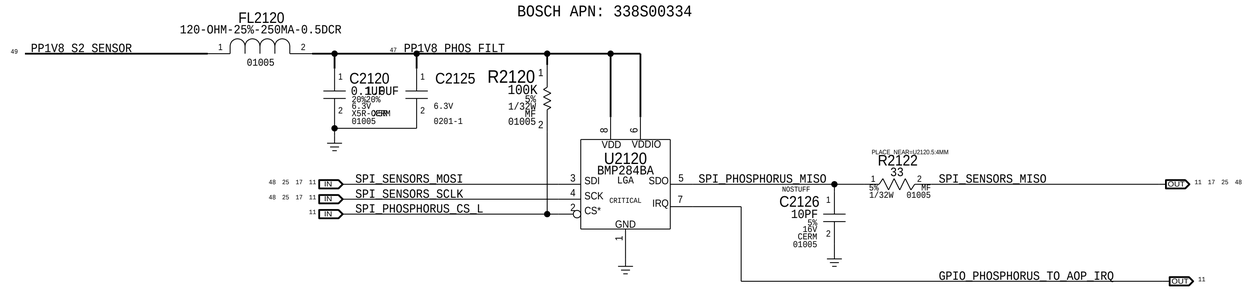

PAGE TITLE

SENSOR: KOBOL, PHOS2

KONA MASTER

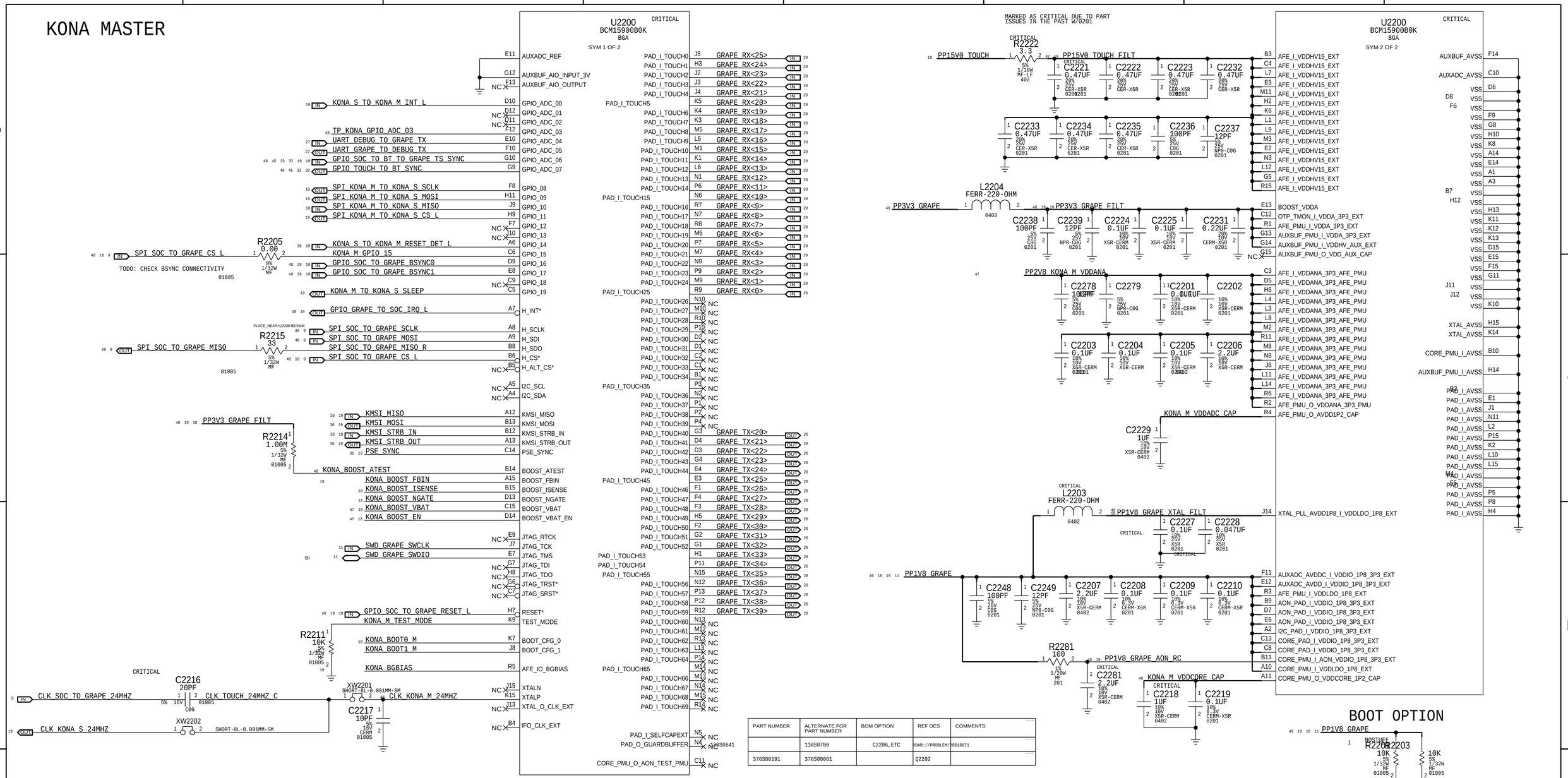

PART NUMBER	ALTERNATE FOR PART NUMBER	BOM OPTION	REF DES	COMMENTS:
	138S0700	C2206,ETC	RDAR://PROBLEM/29618071	
376S00191	376S00061		Q2202	
371S00118	371S00175		D2201	
371S00117	371S00175		D2201	

KONA: SLAVE

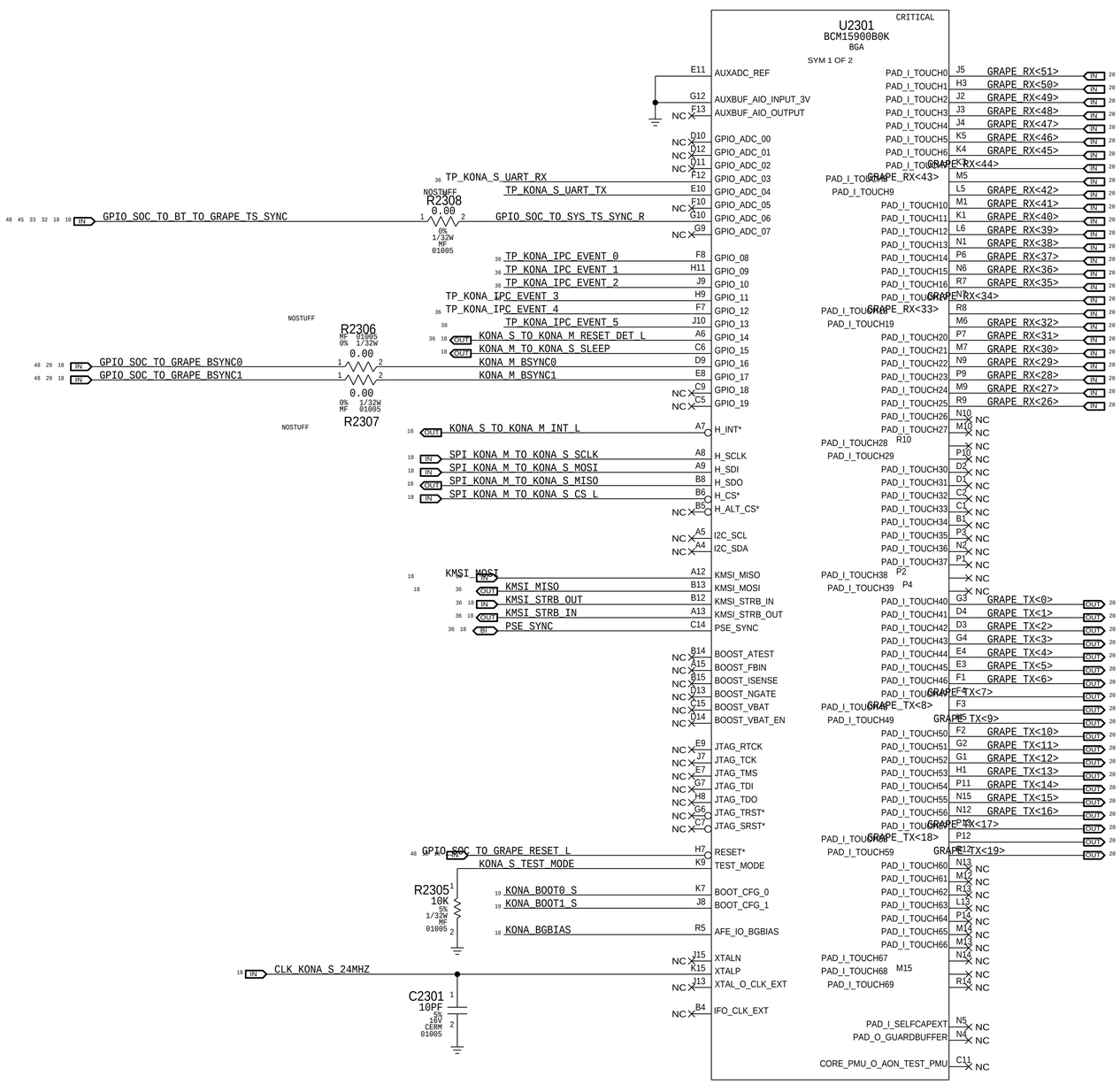

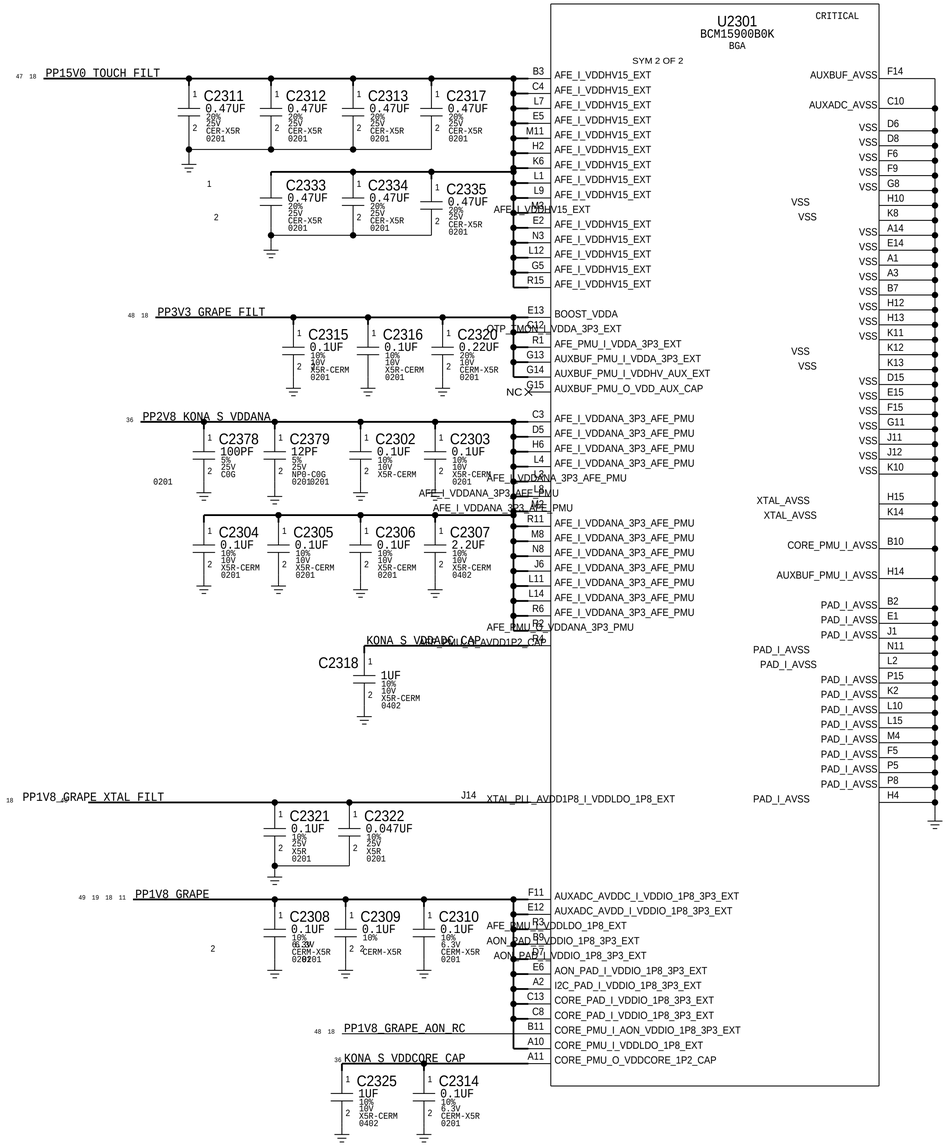

BOOT OPTION

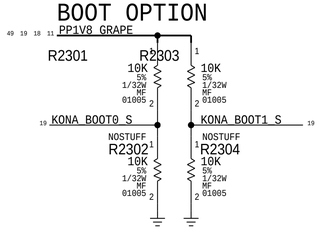

SYNC_MASTER=J207_MLB_B_ARUBA SYNC_DATE=03/05/2018

PAGE TITLE

TOUCH: KONA SLAVE

TOUCH FLEX CONNECTOR (SENSE)

MATCHES J207_GRAPE_FLEX 051-01606_3.0.0

MLB: 516S00063
FLEX: 516S00064

MOUNTING PINS CAN BE USED FOR ELECTRICAL CONNECTIONS

J2400
505066-5422
F-ST-SM

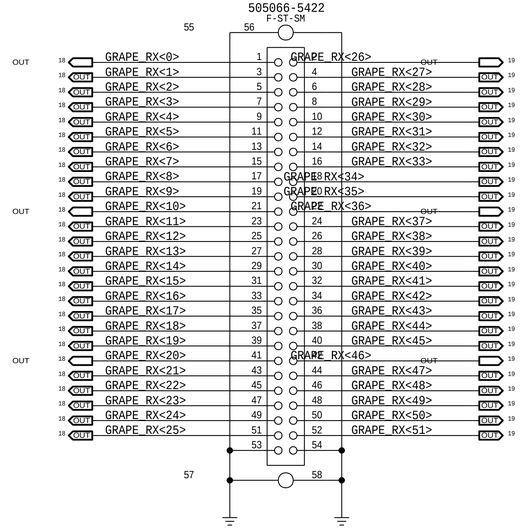

TOUCH FLEX CONNECTOR (DRIVE)

MATCHES J207_GRAPE_FLEX 051-01606_3.0.0

MLB: 516S00224
FLEX: 516S00225

MOUNTING PINS CAN BE USED FOR ELECTRICAL CONNECTIONS

J2401
505066-4222
F-ST-SM

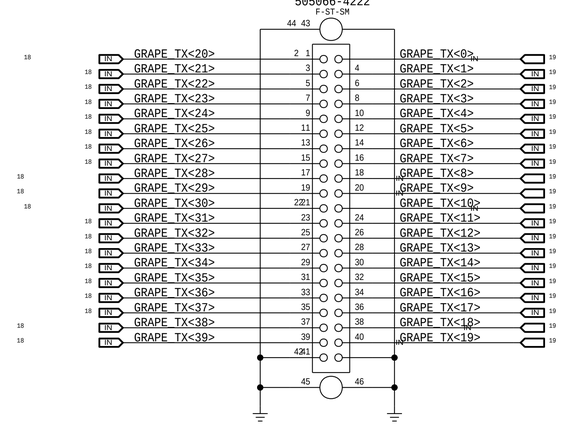

SYNC_MASTER=J207B_MLB_B SYNC_DATE=03/25/2018

PAGE TITLE

TOUCH: GRAPE CONN

MINION

VCCIO: NOM 1.8V
VCC: NOM 1.2V (1.25V CAMERA RAIL IS ACCEPTABLE)
VCCAUX: NOM 2.5V (2.6V CAMERA RAIL IS ACCEPTABLE)

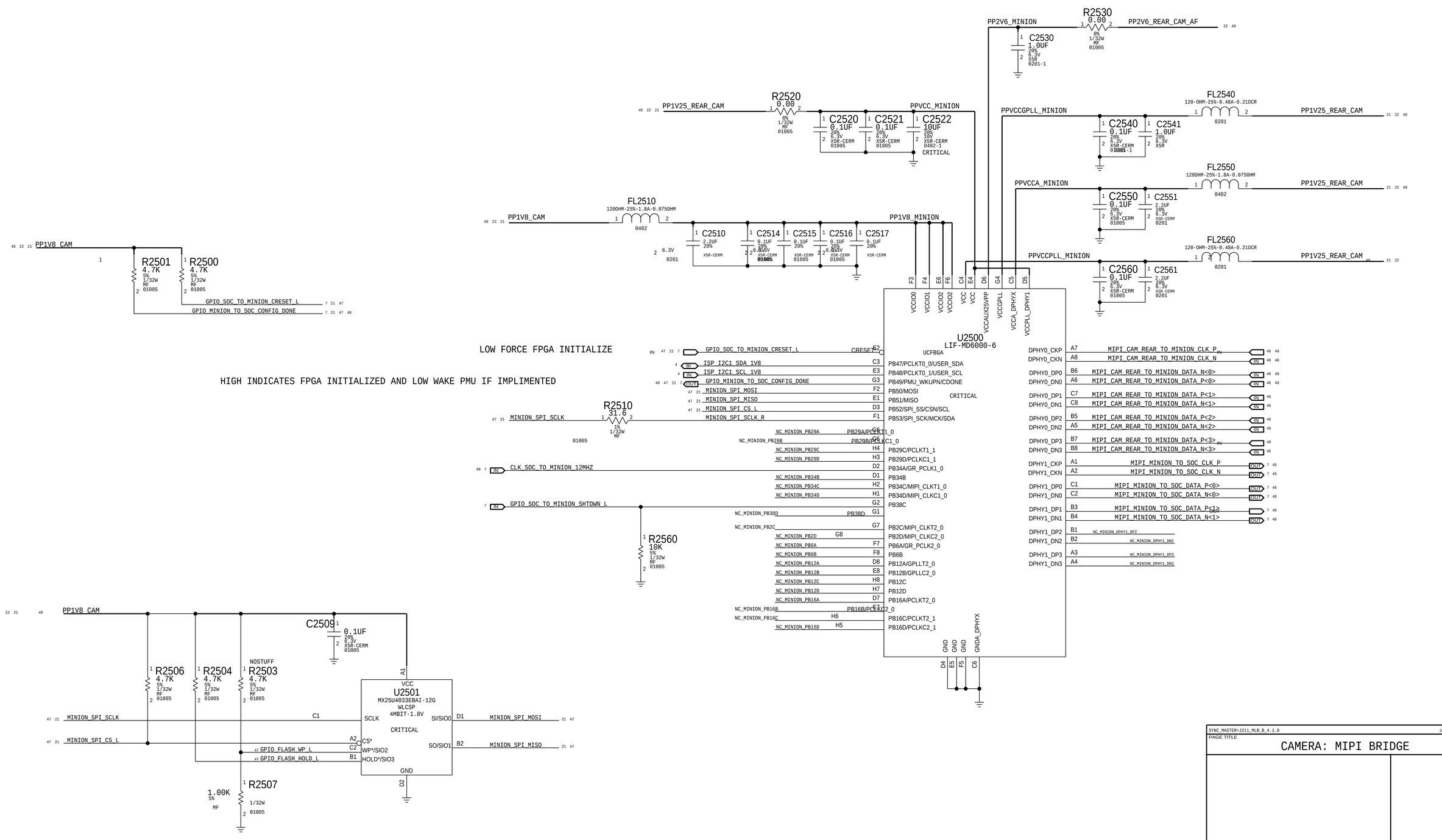

SYNC_MASTER=J211_MLB_B_4.1.0 SYNC_DATE=07/29/2018

PAGE TITLE

CAMERA: MIPI BRIDGE

CORNER3 XFER FLEX B2B

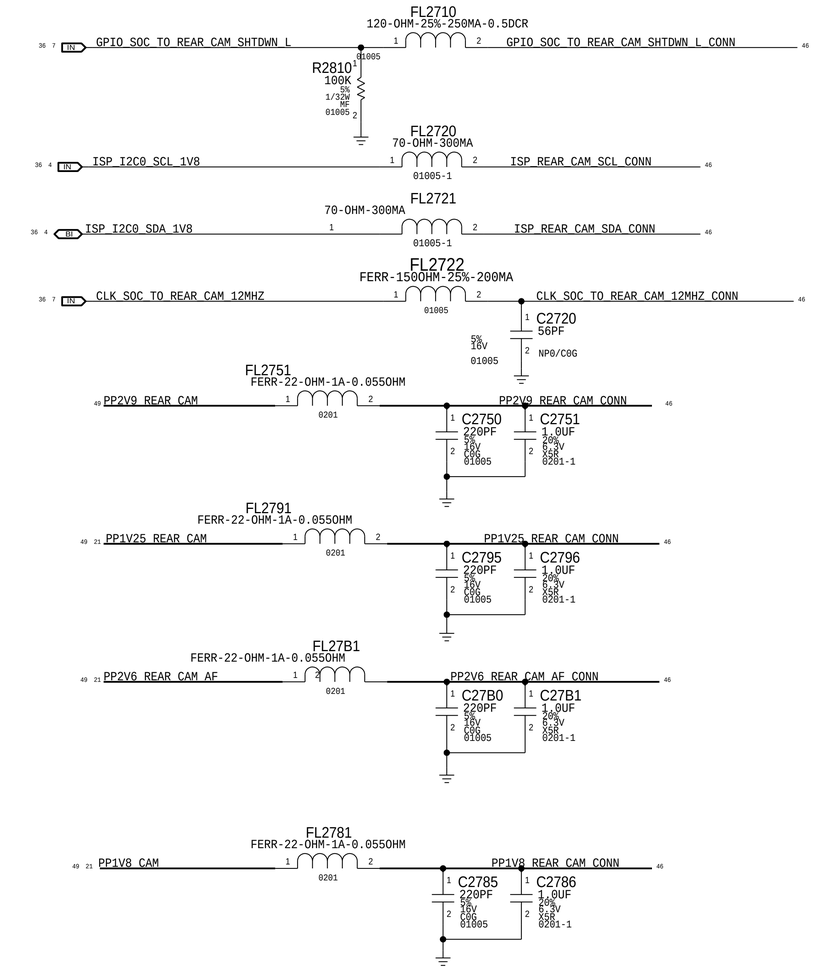

ALS FILTERS

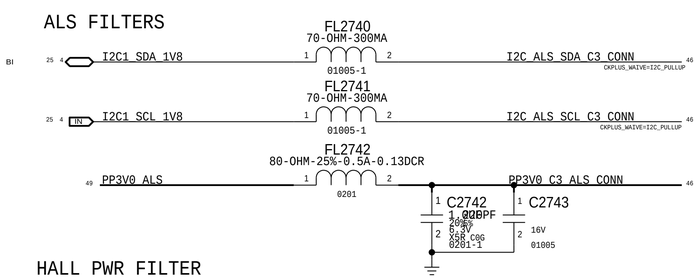

HALL PWR FILTER

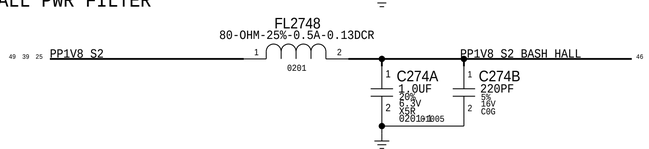

BUTTON FILTERS/ESD

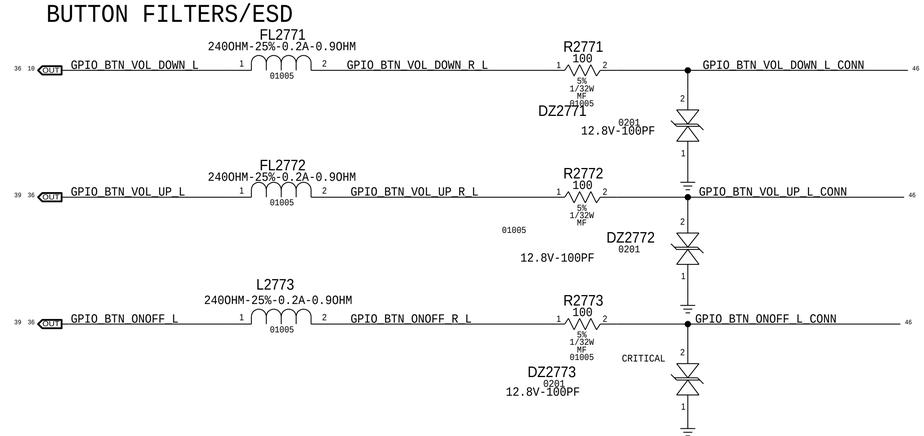

SYNC_MASTER=J207B_MLB_B SYNC_DATE=03/25/2018

PAGE TITLE

FLEX CONNS: CORNER 3

FRONT CAMERA (NH)

POWER FILTERS

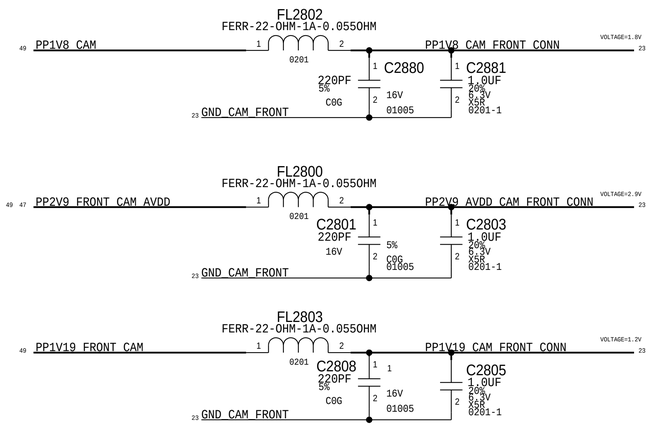

FRONT CAMERA CONNECTOR

MATCHES J120_FRONT_CAM_FLEX_051-01272_2.0.0

FLEX SIDE: 516S00194
MLB SIDE: 516S00193

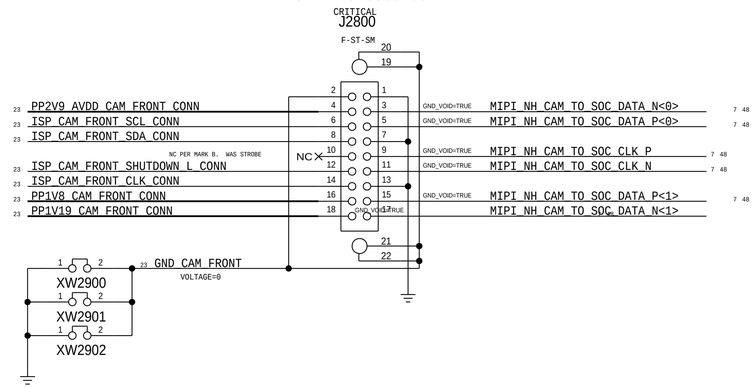

IO FILTERS

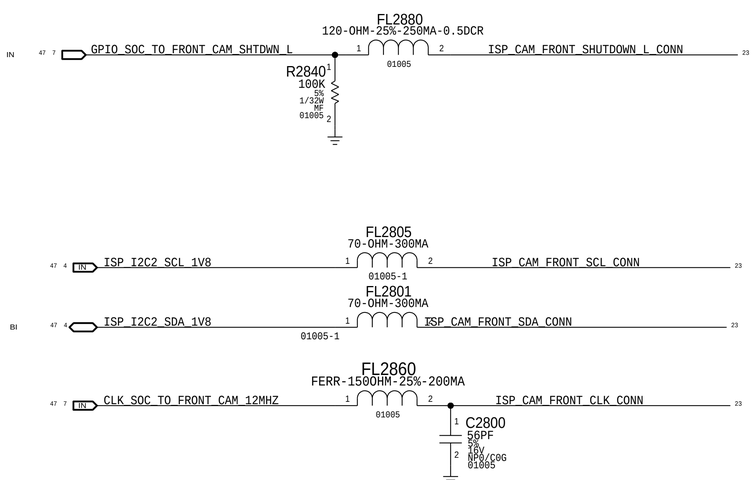

PART NUMBER	ALTERNATE FOR PART NUMBER	BOM OPTION	REF DES	COMMENTS:

SYNC_MASTER=J211_MLB_B SYNC_DATE=07/05/2018

PAGE TITLE

CAMERA: FRONT

PART NUMBER	ALTERNATE FOR PART NUMBER	BOM OPTION	REF DES	COMMENTS:
155S00338	155S00402			L3000-5

CLIFDEN

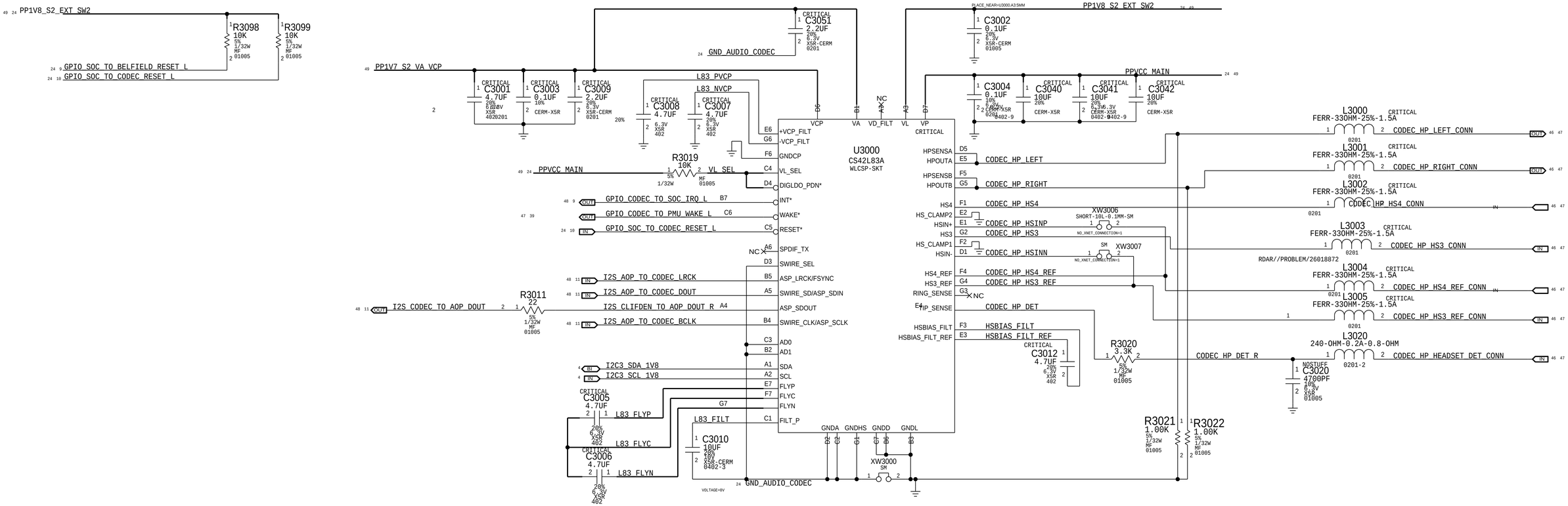

BELFIELD

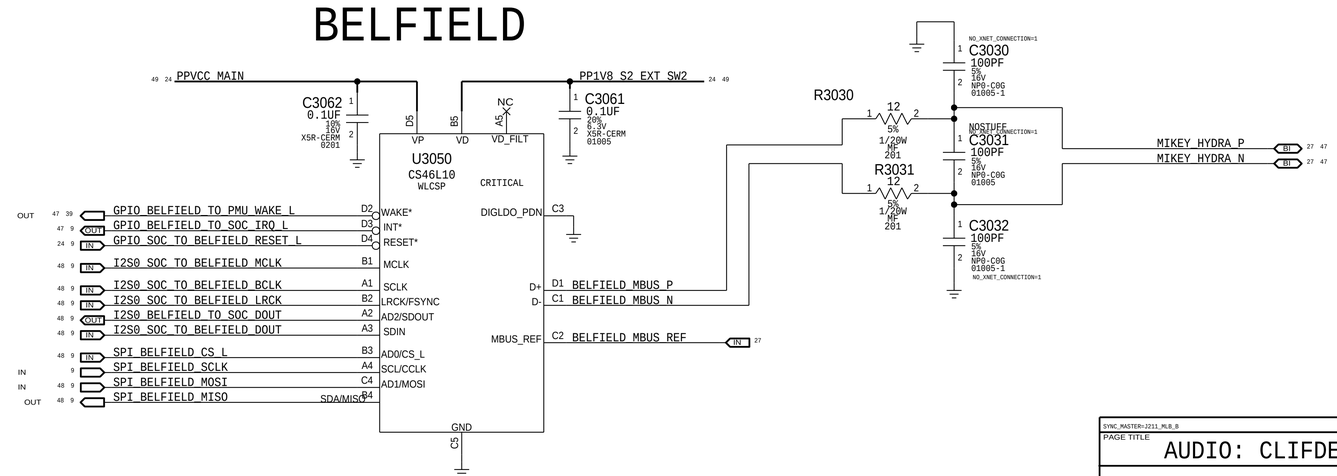

SYNC_MASTER=J211_MLB_B SYNC_DATE=07/05/2018

PAGE TITLE

AUDIO: CLIFDEN, BELFIELD

CORNER 4 + DMIC FLEX FILTERS

MOLYBDENUM SPI FILTERS

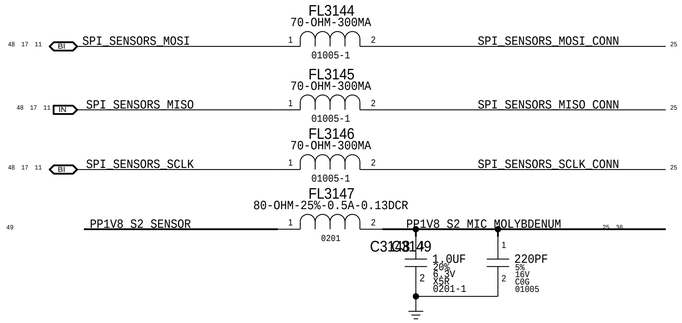

ALS FILTERS

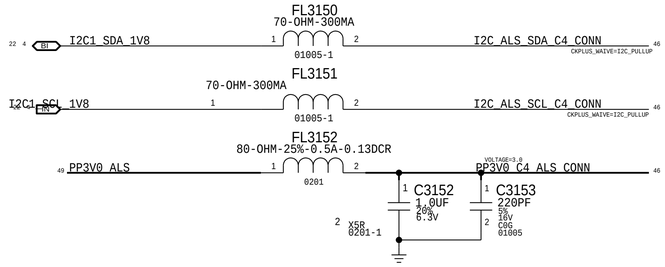

HALL FILTER

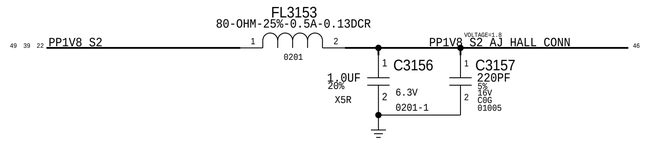

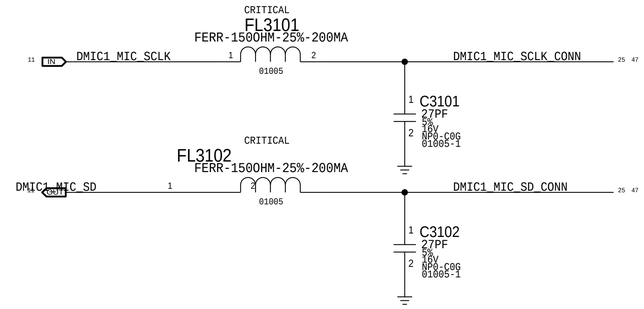

MIC FLEX B2B

MATCHES J207_MIC_FLEX_051-01915_0.5.0

MLB APN: 516S1278

FLEX APN: 516S1280

CRITICAL

J3100

24-5857-016-201-829

F-ST-SM

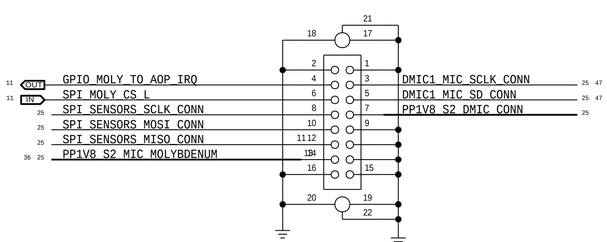

ROUTING	SEED BOOT	LOCATION	DATA ASSERTS ON	DATA LATCHED ON
MIC1	DMIC1	HIGH	CENTER SPLINE	CLK RISING EDGE	CLK FALLING EDGE
MIC2	DMIC1	LOW	REAR	CLK FALLING EDGE	CLK RISING EDGE

SYNC_MASTER=J207B_MLB_B SYNC_DATE=03/25/2018

PAGE TITLE

FLEX CONNS: C4 & DMIC

CN RIGHT SPEAKER AMP

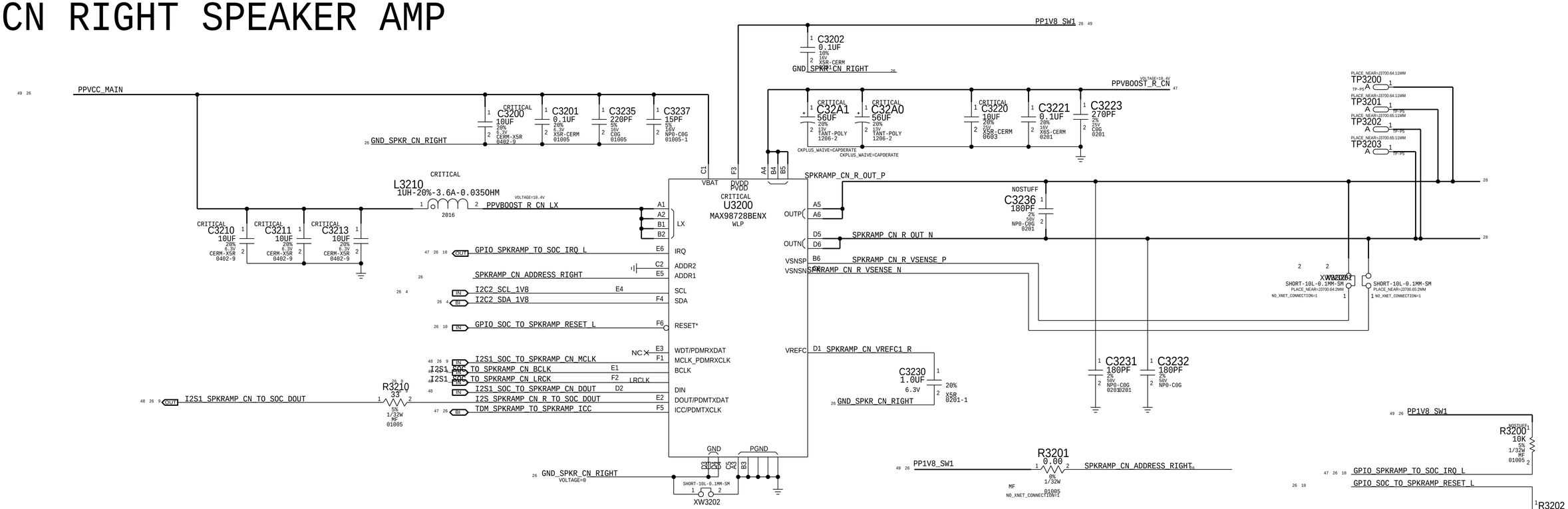

CN LEFT SPEAKER AMP

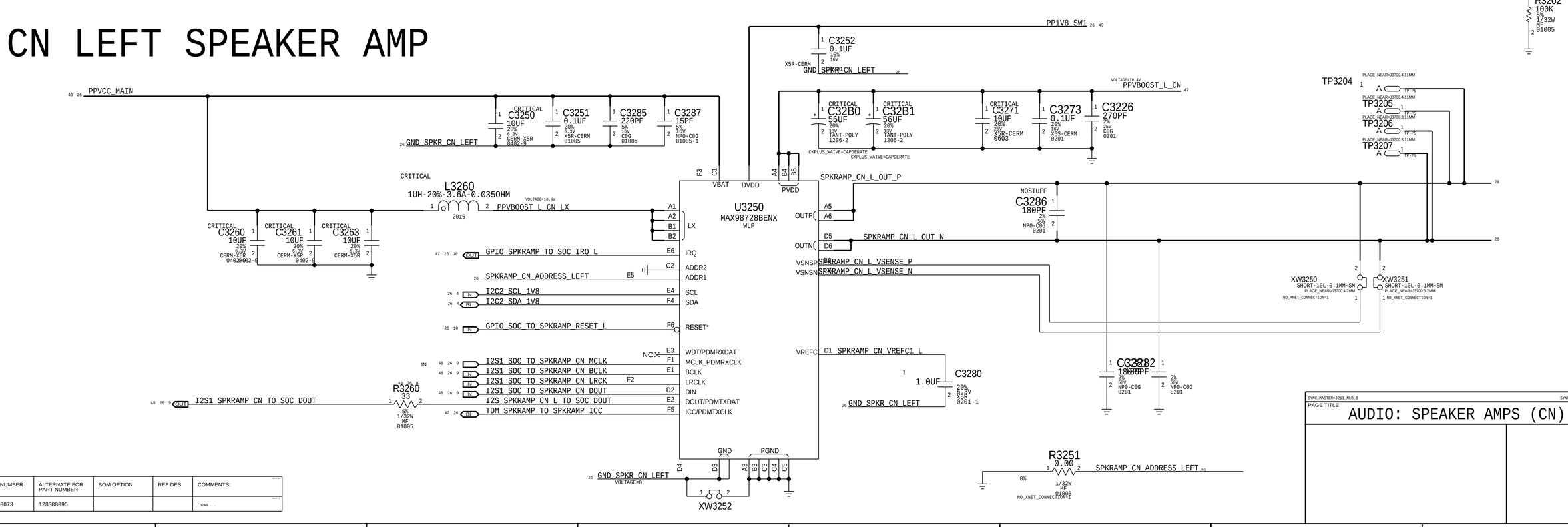

PART NUMBER	ALTERNATE FOR PART NUMBER	BOM OPTION	REF DES	COMMENTS:
128S00073	128S00095			C32A0 ...

SYNC_MASTER=J211_MLB_B SYNC_DATE=07/05/2018

PAGE TITLE

AUDIO: SPEAKER AMPS (CN)

HYDRA

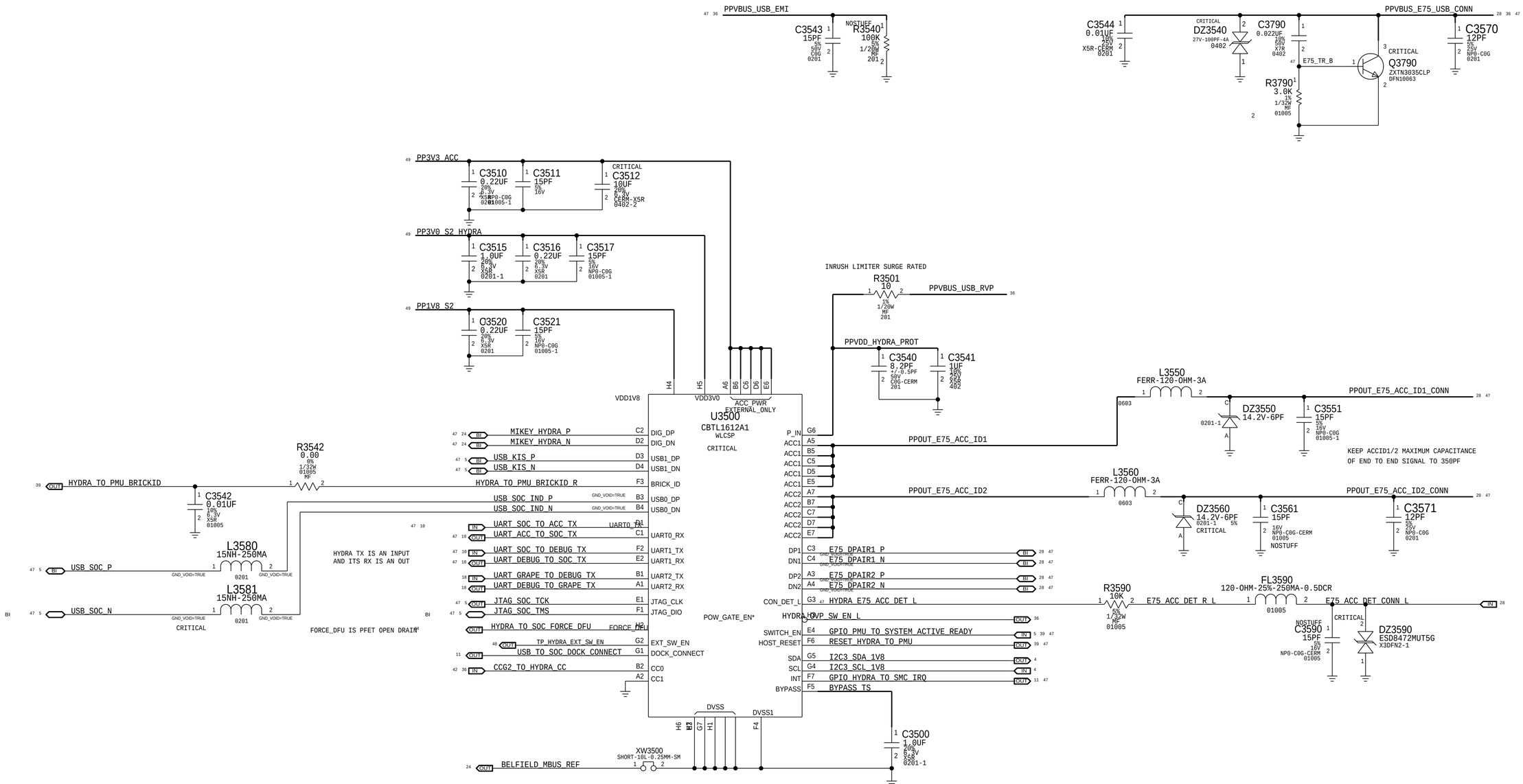

SYNC_MASTER=J211_MLB_B SYNC_DATE=07/05/2018

PAGE TITLE

IO: HYDRA

HOTBAR CONNECTOR TO I/0 FLEX

TO BE MATCHED TO J217_IO_FLEX

MLB APN: 998-01935
FLEX APN: 998-01936

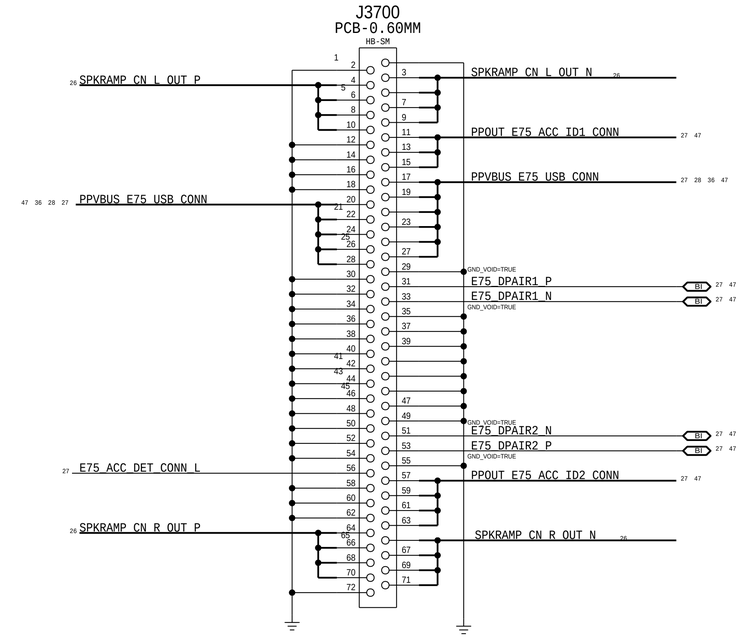

SYNC_MASTER=J207B_MLB_B SYNC_DATE=03/25/2018

PAGE TITLE

IO: HOTBAR,SIM,XBAR

EDP FLEX FILTERS AND CONNECTORS

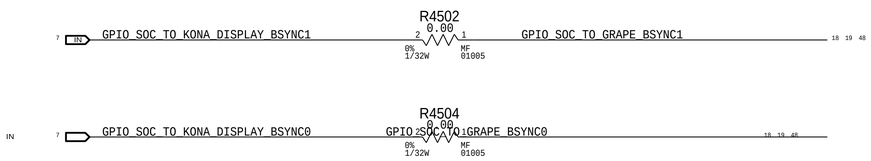

TCON I2C FILTERS

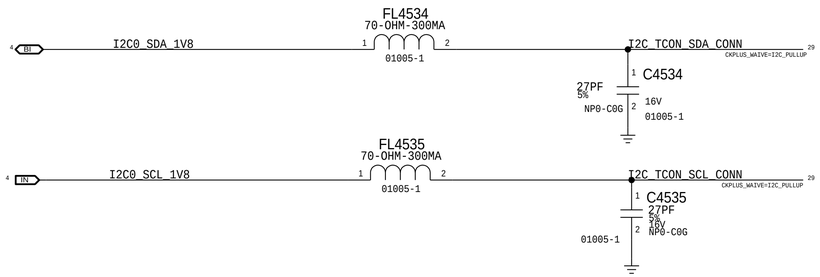

MATCHES J207_EDP_FLEX_051-01615_2.0.0
APN (FLEX):516S1282
APN (MLB):516S1281

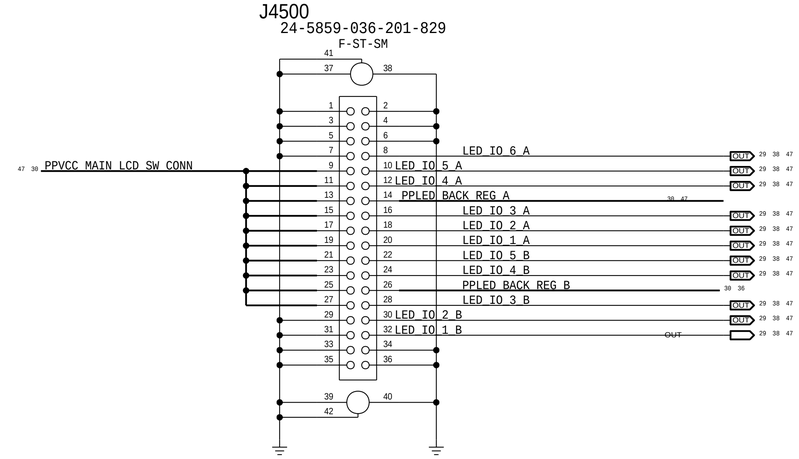

MATCHES J207_EDP_FLEX_051-01615_2.0.0
APN (FLEX): 516S1282
APN (MLB): 516S1281

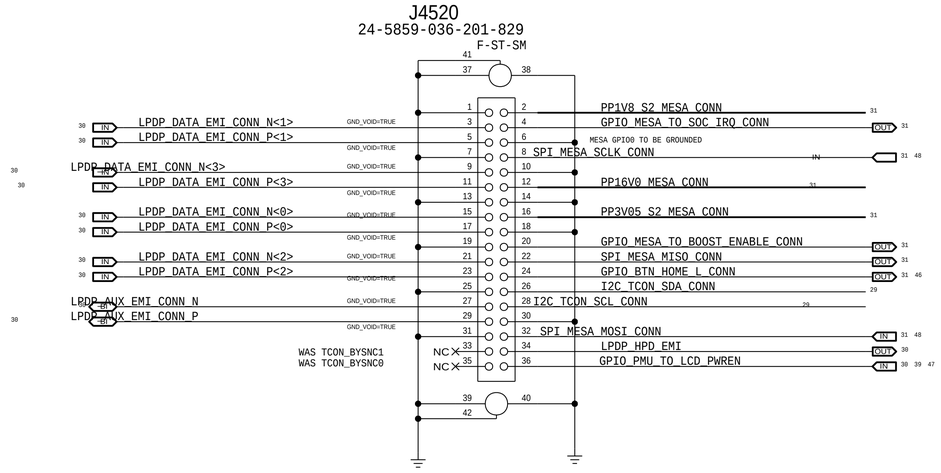

DISPLAY ID
---
0 - X1452 (OXIDE DISPLAY)
1 - X1449 (A-SI DISPLAY)

LED DRIVER FILTERS

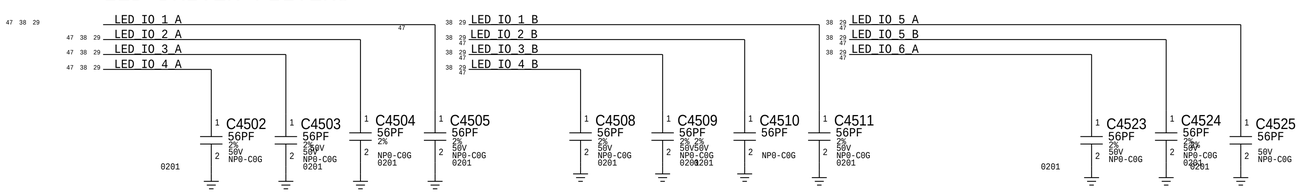

SYNC_MASTER=J207B_MLB_B SYNC_DATE=03/25/2018

PAGE TITLE

DISPLAY CONN

EDP CONNECTOR SUPPORT

PART NUMBER	ALTERNATE FOR PART NUMBER	BOM OPTION	REF DES	COMMENTS:
155S0914	155S0897		L4602,ETC	RADAR://PROBLEM/21527410

DISPLAY PWR SWITCH

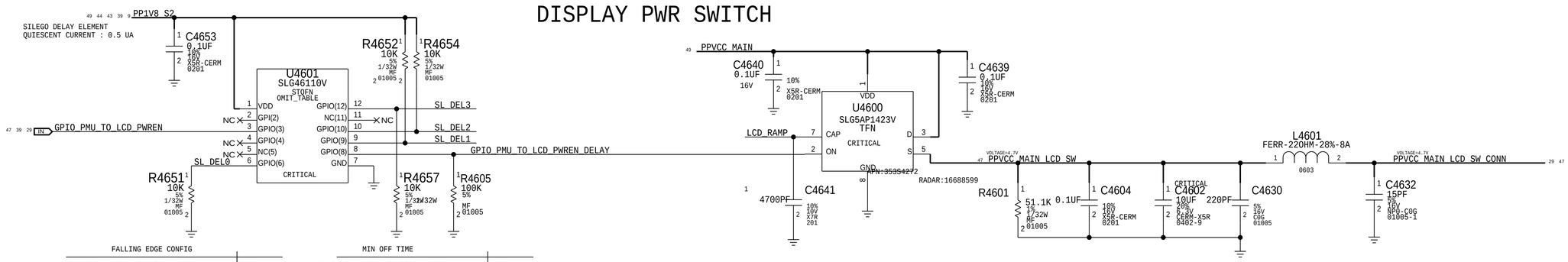

FALLING EDGE CONFIG		MIN OFF TIME	
SL_DEL0 - LOW , SL_DEL1 - LOW	N/A	SL_DEL2 - LOW , SL_DEL3 - LOW	N/A
SL_DEL0 - LOW , SL_DEL1 - HIGH	50 MS	SL_DEL2 - LOW , SL_DEL3 - HIGH	50 MS
SL_DEL0 - HIGH, SL_DEL1 - LOW	75 MS	SL_DEL2 - HIGH, SL_DEL3 - LOW	100 MS
SL_DEL0 - HIGH, SL_DEL1 - HIGH	100 MS	SL_DEL2 - HIGH, SL_DEL3 - HIGH	150 MS

PART#	QTY	DESCRIPTION	REFERENCE DESIGNATOR(S)	CRITICAL	BOM OPTION
343S00293	1	DISP. DELAY SAK, SLG4AP41158	U4601	CRITICAL	

HIBISCUS HPD VOLTAGE IS 1.8V COMPATIBLE, VOLTAGE DIVIDER REMOVED
VOLTAGE DIVIDER REFERENCE IN PREVIOUS PLATFORMS; RDAR://PROBLEM/15390794

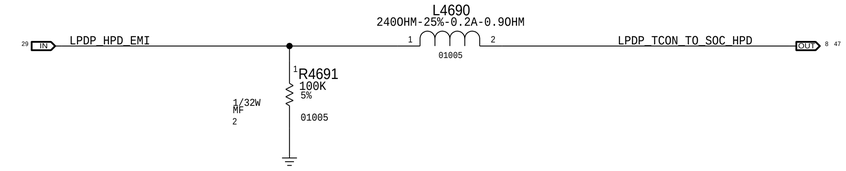

LPDP-AC COUPLING & CMC

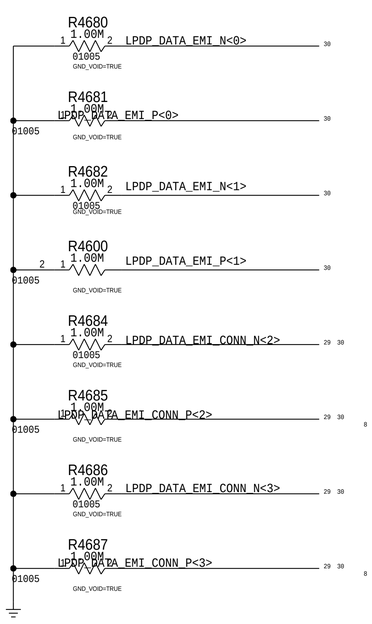

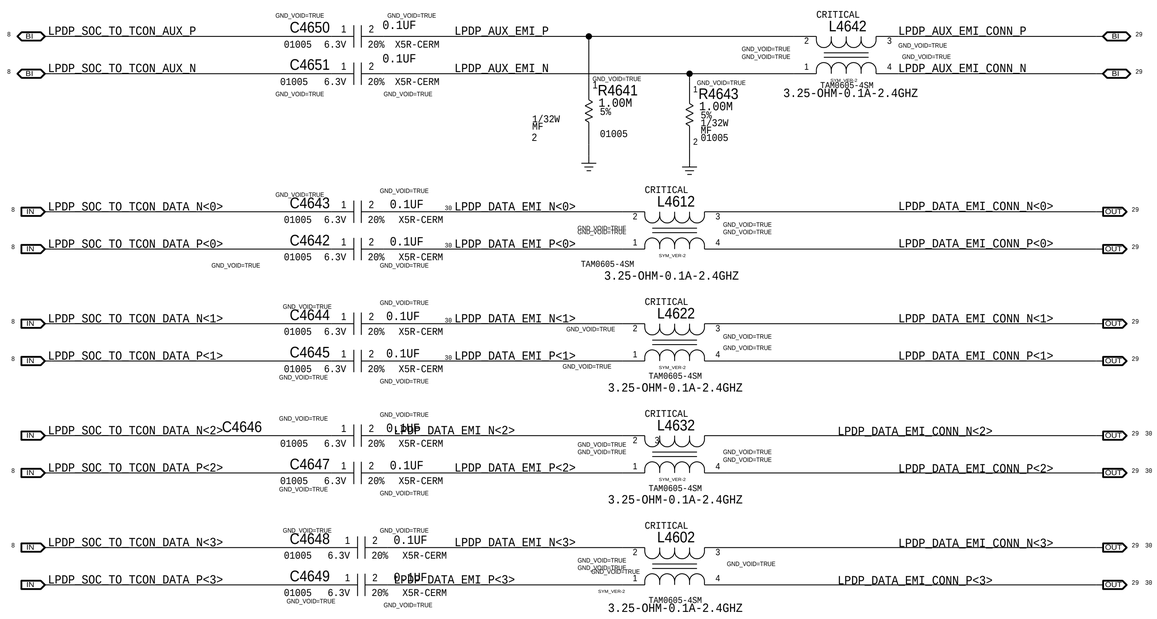

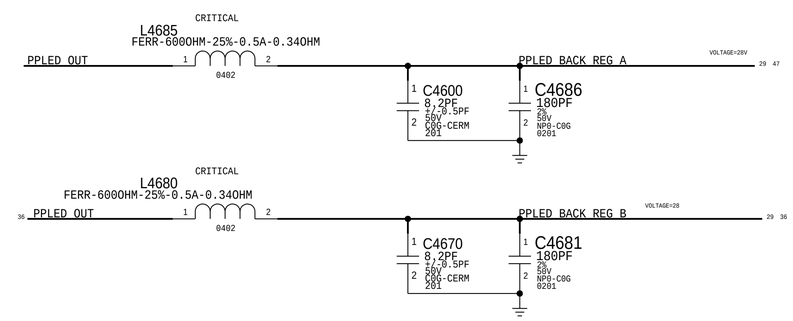

SYNC_MASTER=J207B_MLB_B SYNC_DATE=03/25/2018

PAGE TITLE

DISPLAY: EDP SUPPORT

PART NUMBER	ALTERNATE FOR PART NUMBER	BOM OPTION	REF DES	COMMENTS:
132S00088	132S0639		C4746, ETC	RDAR://PROBLEM/26928883

MESA & HOME BUTTON

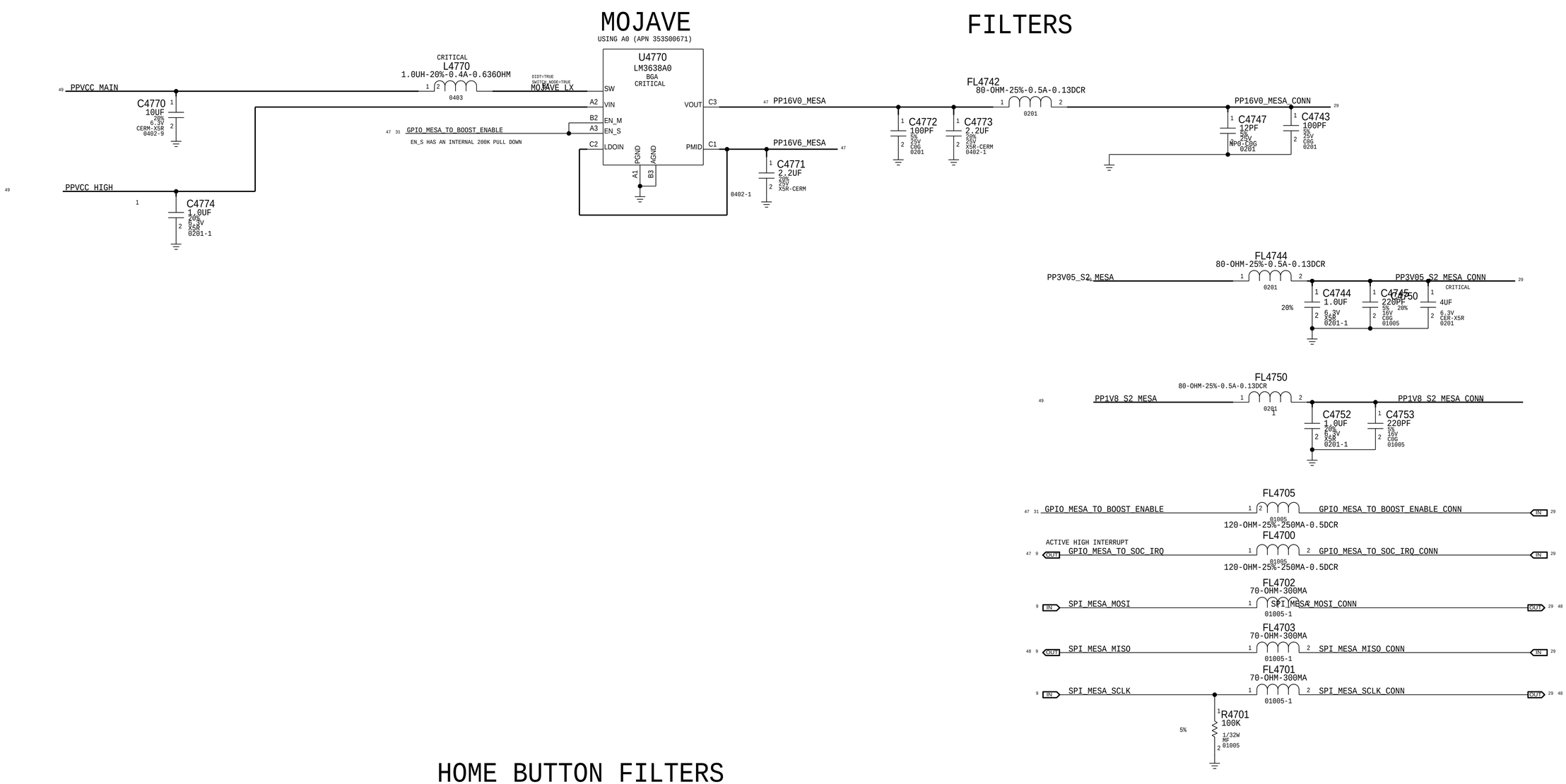

HOME BUTTON FILTERS

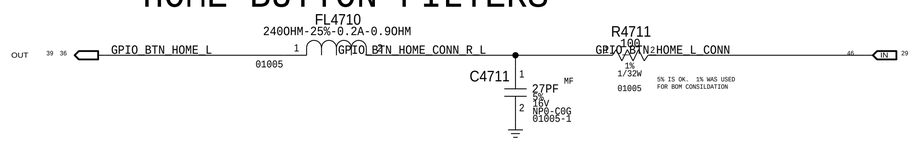

SYNC_MASTER=J211_MLB_B SYNC_DATE=07/05/2018

PAGE TITLE

SENSOR: MESA

WLAN SYMBOL IO PORTS

POWER

53 46 45 34 33 70 69 61 IO — PPVCC_MAIN VOLTAGE=3.8

45 PP1V8_S2_EXT_SW2 VOLTAGE=1.8

CONTROL

45 33 IO — GPIO_PMU_TO_WLAN_REG_ON

45 33 IO — GPIO_PMU_TO_BT_REG_ON

45 33 IO — GPIO_SOC_BT_DEVICE_WAKE

CLOCKS

45 33 IO — CLK_PMU_TO_WLAN_32K

GPIO_WLAN_TO_SOC_TIME_SYNC

WLAN PCIE

45 33 IO — PCIE_SOC_TO_WLAN_REFCLK_P

45 33 IO — PCIE_SOC_TO_WLAN_REFCLK_N

45 33 IO — PCIE_SOC_TO_WLAN_TX_P

45 33 IO — PCIE_SOC_TO_WLAN_TX_N

45 33 IO — PCIE_WLAN_TO_SOC_TX_C_P

45 33 IO — PCIE_WLAN_TO_SOC_TX_C_N

IO 45 33 — PCIE_SOC_TO_WLAN_RESET_L

IO 45 33 — PCIE_WLAN_TO_SOC_CLKREQ_L

IO 45 33 — GPIO_WLAN_TO_PMU_HOST_WAKE

BLWLAN UART

45 33 IO — UART_SOC_TO_BT_TX

45 33 IO — UART_BT_TO_SOC_TX

45 33 IO — UART_SOC_TO_BT_RTS_L

45 33 IO — UART_BT_TO_SOC_RTS_L

AOP

IO 45 33 — GPIO_AOP_TO_WLAN_CONTEXT_A

IO 45 33 — GPIO_AOP_TO_WLAN_CONTEXT_B

COEX

46 33 IO — UART_COEX_BB_TO_WLAN_TXD

46 33 IO — UART_COEX_WLAN_TO_BB_TXD

RF

35 34 IO — 50_DRX_LAA_LNA2_OUT

35 34 IO — 50_PRX_LAA_LNA1_OUT

RFFE

58 34 IO — PP_1V8_XCVR_TO_FE_RX_RFFE_IO

58 34 32 IO — XCVR_RX_RFFE_CLK_WLAN

58 34 32 IO — XCVR_RX_RFFE_DATA_WLAN

58 34 IO — PP_1V8_XCVR_TO_FE_RX_RFFE_IO

58 34 32 IO — XCVR_RX_RFFE_CLK_WLAN

58 34 32 IO — XCVR_RX_RFFE_DATA_WLAN

PENCIL

1045 33 19 18 48 IO — GPIO_SOC_TO_BT_TO_GRAPE_TS_SYNC

48 45 33 18 IO — GPIO_TOUCH_TO_BT_SYNC

45 33 IO — NC_BT_TO_SCORPIUS_TX_IND

45 33 IO — NC_GPIO_WLAN_TO_SCORPIUS_TX_IND

SYNC_MASTER=WIFI_MLB_0.22.0 SYNC_DATE=09/26/2018

PAGE TITLE

J217+J218 WiFi+BT_GNSS

J217+J218: DIET COKE PRIMARY MODULE

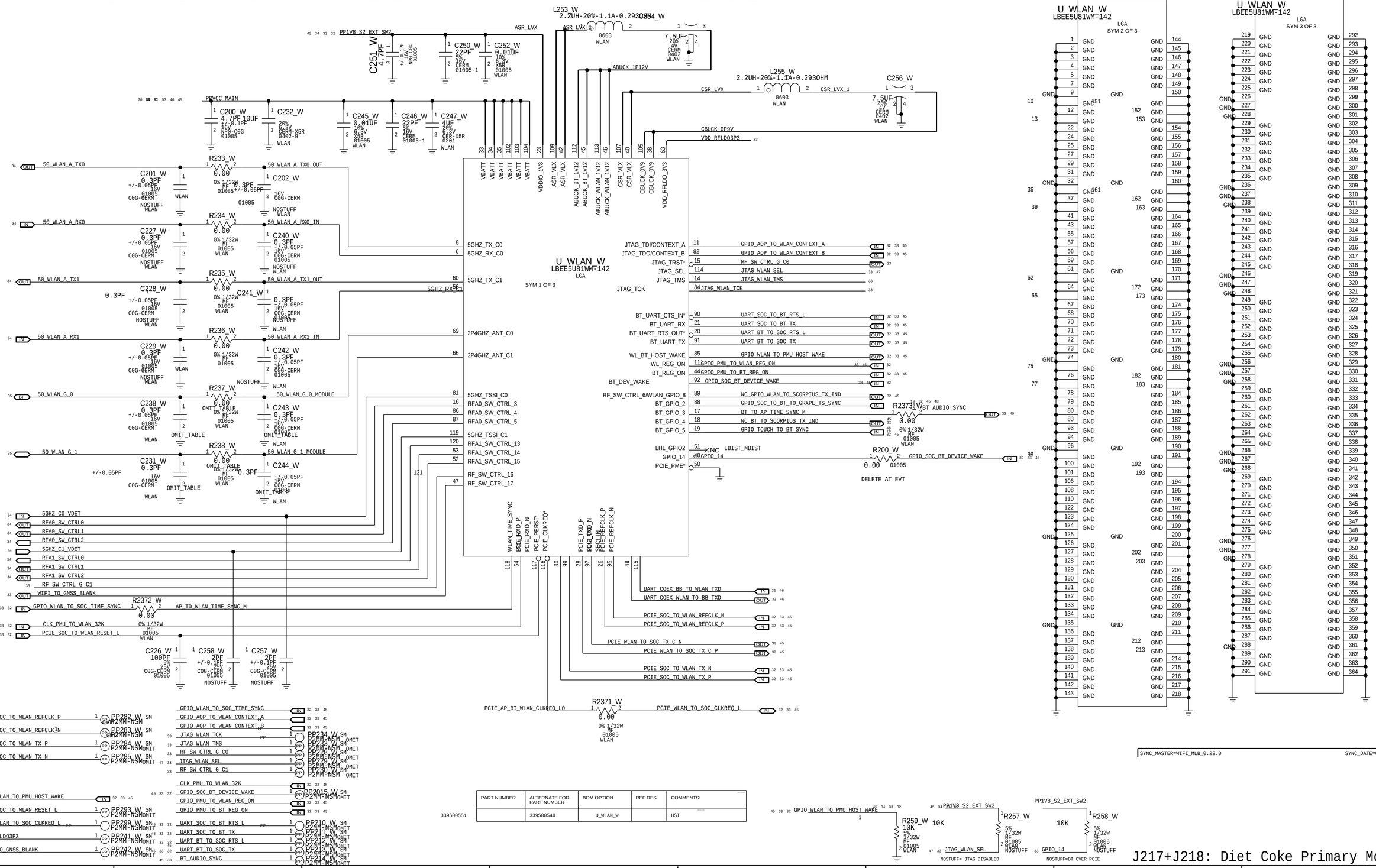

PART NUMBER	ALTERNATE FOR PART NUMBER	BOM OPTION	REF DES	COMMENTS:
339S00551	339S00540	U_WLAN_W		USI

J217+J218: Diet Coke Primary Module

J218: DIET COKE REMOTE FEMS

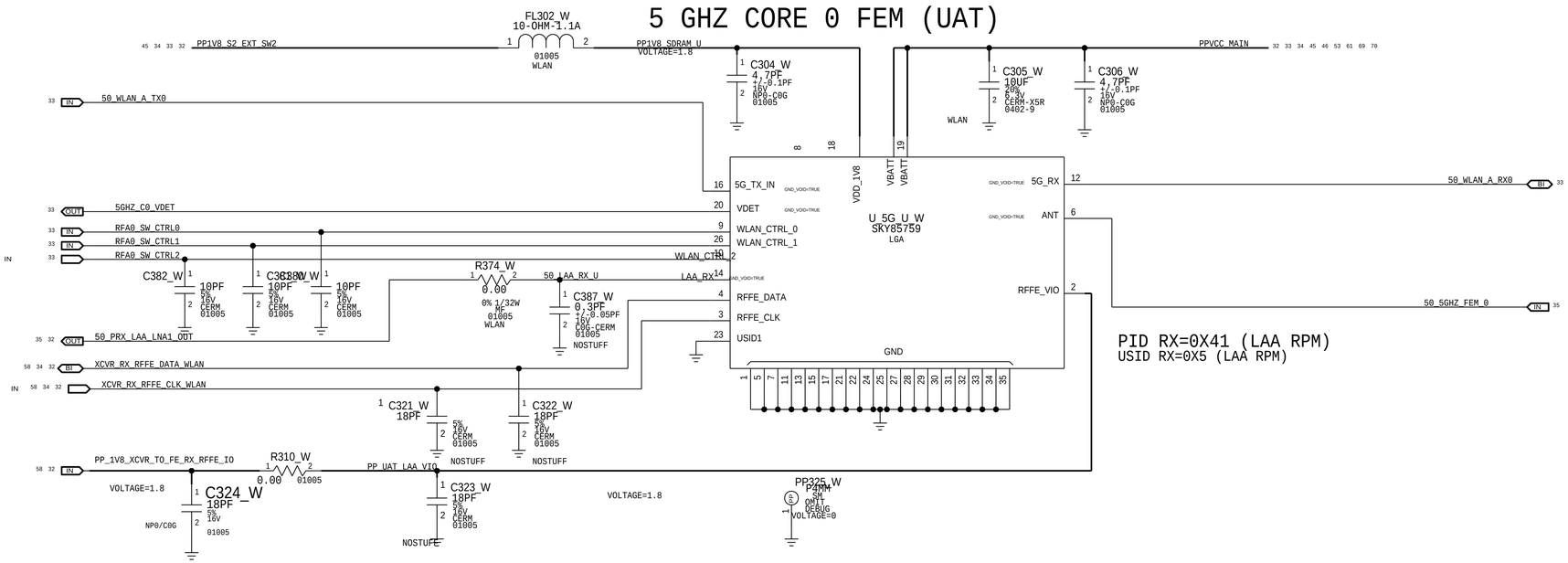

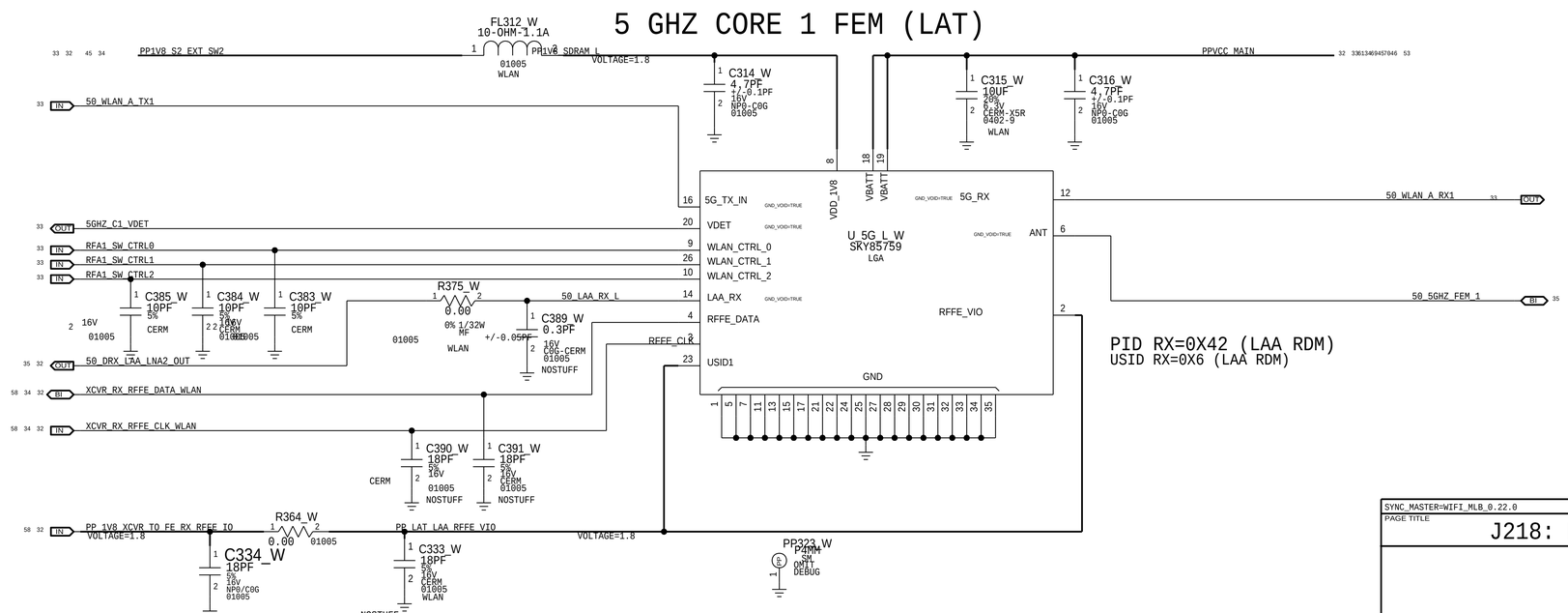

SYNC_MASTER=WIFI_MLB_0.22.0 SYNC_DATE=09/26/2018

PAGE TITLE

J218: Remote FEMs

J218: FRONT END

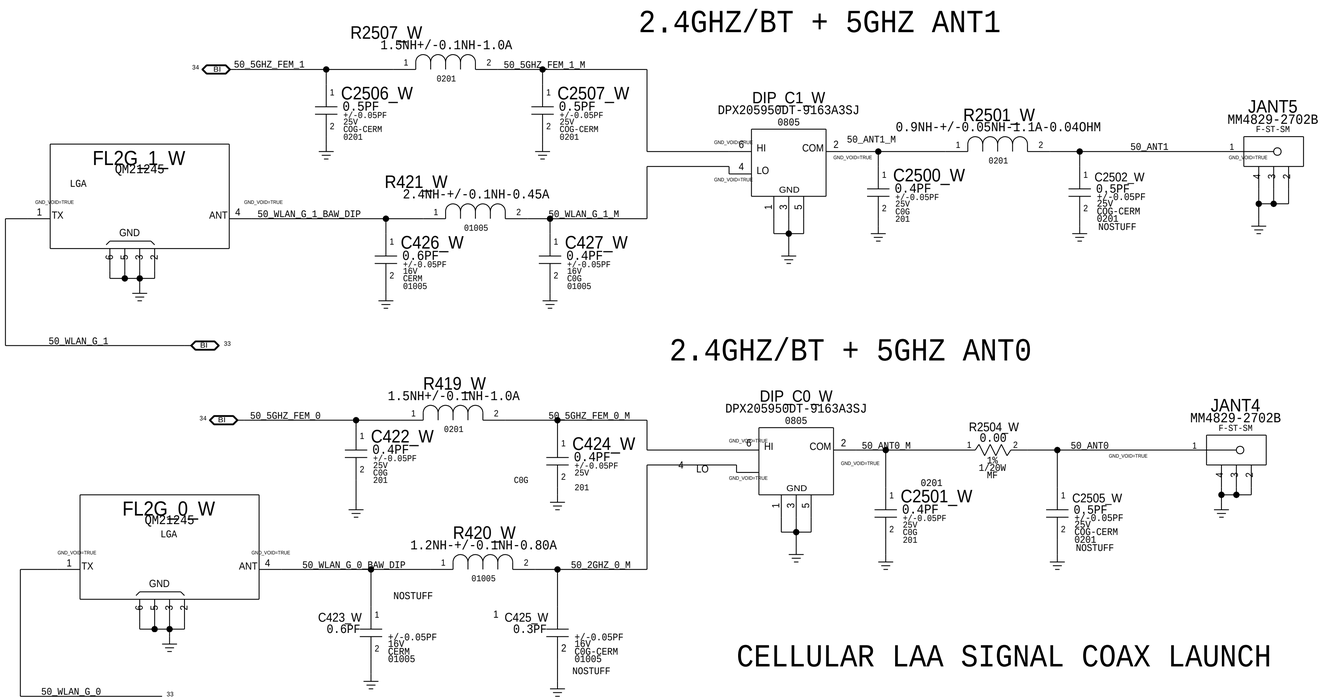

PART#	QTY	DESCRIPTION	REFERENCE DESIGNATOR(S)	BOM OPTION
131S00030	1	CAP,CER,C0G,HQ,0.7PF,,0201	C243_W	
152S2021	1	NOSTUFF	C238_W NOSTUFF	
152S00421	1	IND,FILM,1.4NH,,UH-Q,01005	R237_W	
152S00423	1	IND,,FILM,1.6NH,+/-0.1NH,,01005	R238_W	
131S00030	1	CAP,CER,C0G,0.4PF,16V,01005	C244_W	
131S0893	1	CAP,CER,C0G,0.2PF,01005,HQ	C231_W	

SYNC_MASTER=WIFI_MLB_0.22.0 SYNC_DATE=09/26/2018

PAGE TITLE

J218: Front End

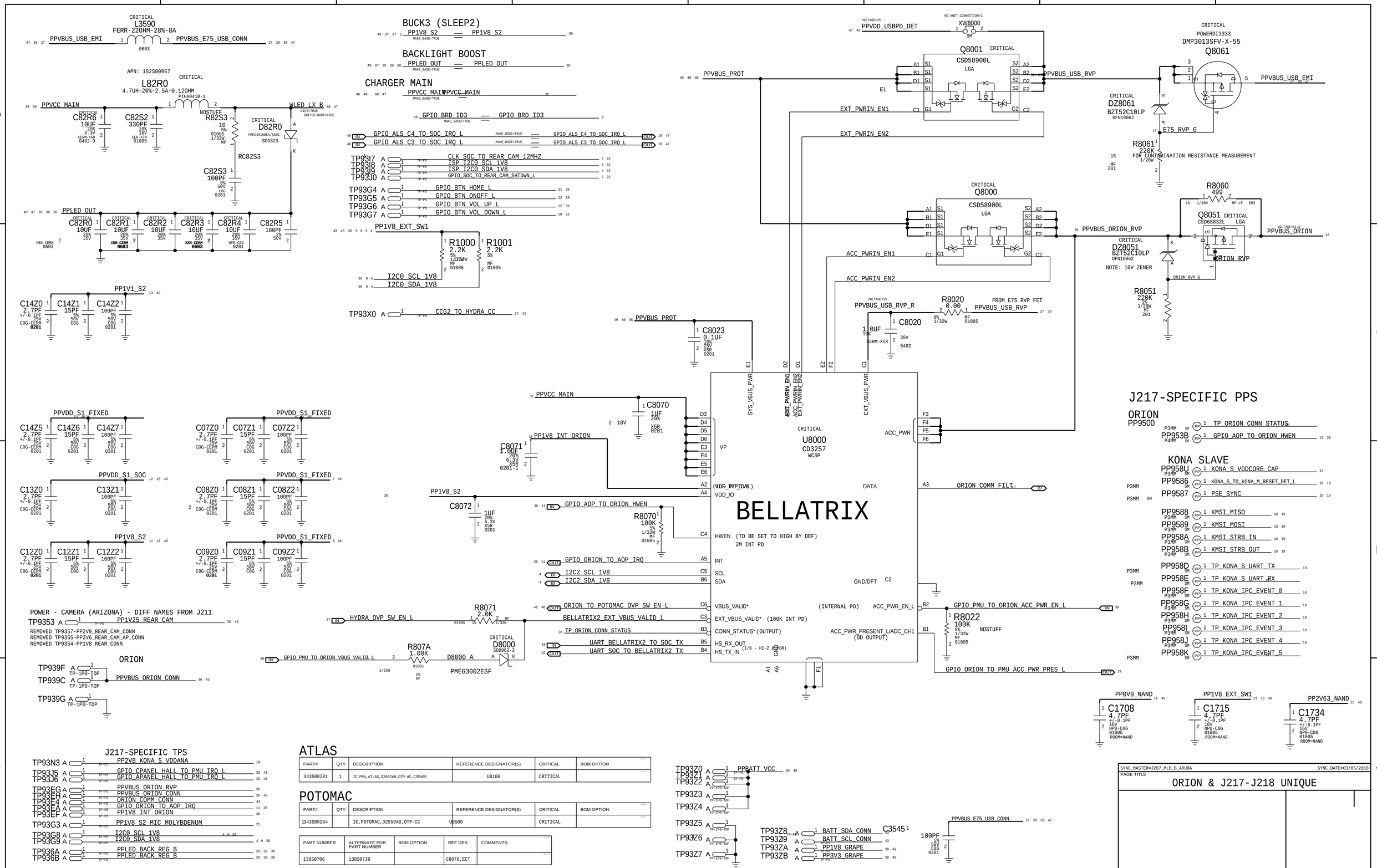
BUCK3 (SLEEP2)
BACKLIGHT BOOST
CHARGER MAIN
L3590
FERR-220HM-28%-8A
PPVBUS_USB_EMI
PPVBUS_E75_USB_CONN
L82R0
4.7UH-20%-2.5A-0.12OHM
PPVCC_MAIN
WLED_LX_B
D82R0
PMEG4010BEA/SOD323
PPLED_OUT
PP1V8_EXT_SW1
R1000 2.2K
R1001 2.2K
I2C0_SCL_1V8
I2C0_SDA_1V8
CCG2_TO_HYDRA_CC
PP1V1_S2
PPVDD_S1_FIXED
PPVDD_S1_SOC
PP1V8_S2
PPVDD_USBPD_DET
XW8000
Q8001 CSD58900L LGA
PPVBUS_PROT
PPVBUS_USB_RVP
EXT_PWRIN_EN1
EXT_PWRIN_EN2
Q8061 DMP3013SFV-X-55
PPVBUS_USB_EMI
DZ8061 BZT52C10LP
E75_RVP_G
R8061 220K
FOR CONTAMINATION RESISTANCE MEASUREMENT
Q8000 CSD58900L LGA
PPVBUS_ORION_RVP
ACC_PWRIN_EN1
ACC_PWRIN_EN2
R8060 499
Q8051 CSD68832L LGA
VOLTAGE=14.5
PPVBUS_ORION
DZ8051 BZT52C10LP
NOTE: 10V ZENER
R8051 220K
ORION_RVP_G
PPVBUS_USB_RVP_R
R8020 0.00
FROM E75 RVP FET
PPVBUS_USB_RVP
C8020 10UF
C8023 0.1UF
PPVCC_MAIN
C8070 1UF
PP1V8_INT_ORION
C8071 1.0UF
C8072 1UF
R8070 100K
GPIO_AOP_TO_ORION_HWEN
GPIO_ORION_TO_AOP_IRQ
I2C2_SCL_1V8
I2C2_SDA_1V8
U8000 CD3257 WCSP
BELLATRIX
SYS_VBUS_PWR
EXT_VBUS_PWR
ACC_PWR
ORION_COMM_FILT
HWEN (TO BE SET TO HIGH BY DEF)
2M INT PD
INT
SCL
SDA
VBUS_VALID*
EXT_VBUS_VALID* (100K INT PD)
CONN_STATUS*(OUTPUT)
HS_RX_OUT
HS_TX_IN
ACC_PWR_EN_L
ACC_PWR_PRESENT_L/ADC_CH1
(OD OUTPUT)
GPIO_PMU_TO_ORION_ACC_PWR_EN_L
R8022 100K
GPIO_ORION_TO_PMU_ACC_PWR_PRES_L
J217-SPECIFIC PPS
ORION
PP9500
TP_ORION_CONN_STATUS
GPIO_AOP_TO_ORION_HWEN
KONA SLAVE
KONA_S_VDDCORE_CAP
KONA_S_TO_KONA_M_RESET_DET_L
PSE_SYNC
KMSI_MISO
KMSI_MOSI
KMSI_STRB_IN
KMSI_STRB_OUT
TP_KONA_S_UART_TX
TP_KONA_S_UART_RX
TP_KONA_IPC_EVENT_0
TP_KONA_IPC_EVENT_1
TP_KONA_IPC_EVENT_2
TP_KONA_IPC_EVENT_3
TP_KONA_IPC_EVENT_4
TP_KONA_IPC_EVENT_5
PP0V9_NAND
C1708 4.7PF
PP1V8_EXT_SW1
C1715 4.7PF
PP2V63_NAND
C1734 4.7PF
POWER - CAMERA (ARIZONA) - DIFF NAMES FROM J211
TP9353 PP1V25_REAR_CAM
REMOVED TP9357-PP2V9_REAR_CAM_CONN
REMOVED TP9355-PP2V6_REAR_CAM_AP_CONN
REMOVED TP9354-PP1V8_REAR_CONN
ORION
TP939F
TP939C
PPVBUS_ORION_CONN
TP939G
HYDRA_OVP_SW_EN_L
R8071 2.0K
ORION_TO_POTOMAC_OVP_SW_EN_L
BELLATRIX2_EXT_VBUS_VALID_L
TP_ORION_CONN_STATUS
UART_BELLATRIX2_TO_SOC_TX
UART_SOC_TO_BELLATRIX2_TO_TX
GPIO_PMU_TO_ORION_VBUS_VALID_L
R807A 1.00K
D8000 PMEG3002ESF
J217-SPECIFIC TPS
PP2V8_KONA_S_VDDANA
GPIO_CPANEL_HALL_TO_PMU_IRQ_L
GPIO_APANEL_HALL_TO_PMU_IRQ_L
PPVBUS_ORION_RVP
PPVBUS_ORION_CONN
ORION_COMM_CONN
GPIO_ORION_TO_AOP_IRQ
PP1V8_INT_ORION
PP1V8_S2_MIC_MOLYBDENUM
I2C0_SCL_1V8
I2C0_SDA_1V8
PPLED_BACK_REG_B
PPBATT_VCC
BATT_SDA_CONN
BATT_SCL_CONN
PP1V8_GRAPE
PP3V3_GRAPE
C3545
PPVBUS_E75_USB_CONN
ATLAS
PART# | QTY | DESCRIPTION | REFERENCE DESIGNATOR(S) | CRITICAL | BOM OPTION
343S00281 | 1 | IC,PMU,ATLAS,D2652A0,OTP-AC,CSP400 | U8100 | CRITICAL
POTOMAC
PART# | QTY | DESCRIPTION | REFERENCE DESIGNATOR(S) | CRITICAL | BOM OPTION
1343S00264 | IC,POTOMAC,D2559A0,OTP-CC | U8500 | CRITICAL
PART NUMBER | ALTERNATE FOR PART NUMBER | BOM OPTION | REF DES | COMMENTS:
138S0706 | 138S0739 | C8070,ECT
SYNC_MASTER=J207_MLB_B_ARUBA
SYNC_DATE=03/05/2018
PAGE TITLE
ORION & J217-J218 UNIQUE

ATLAS BUCKS

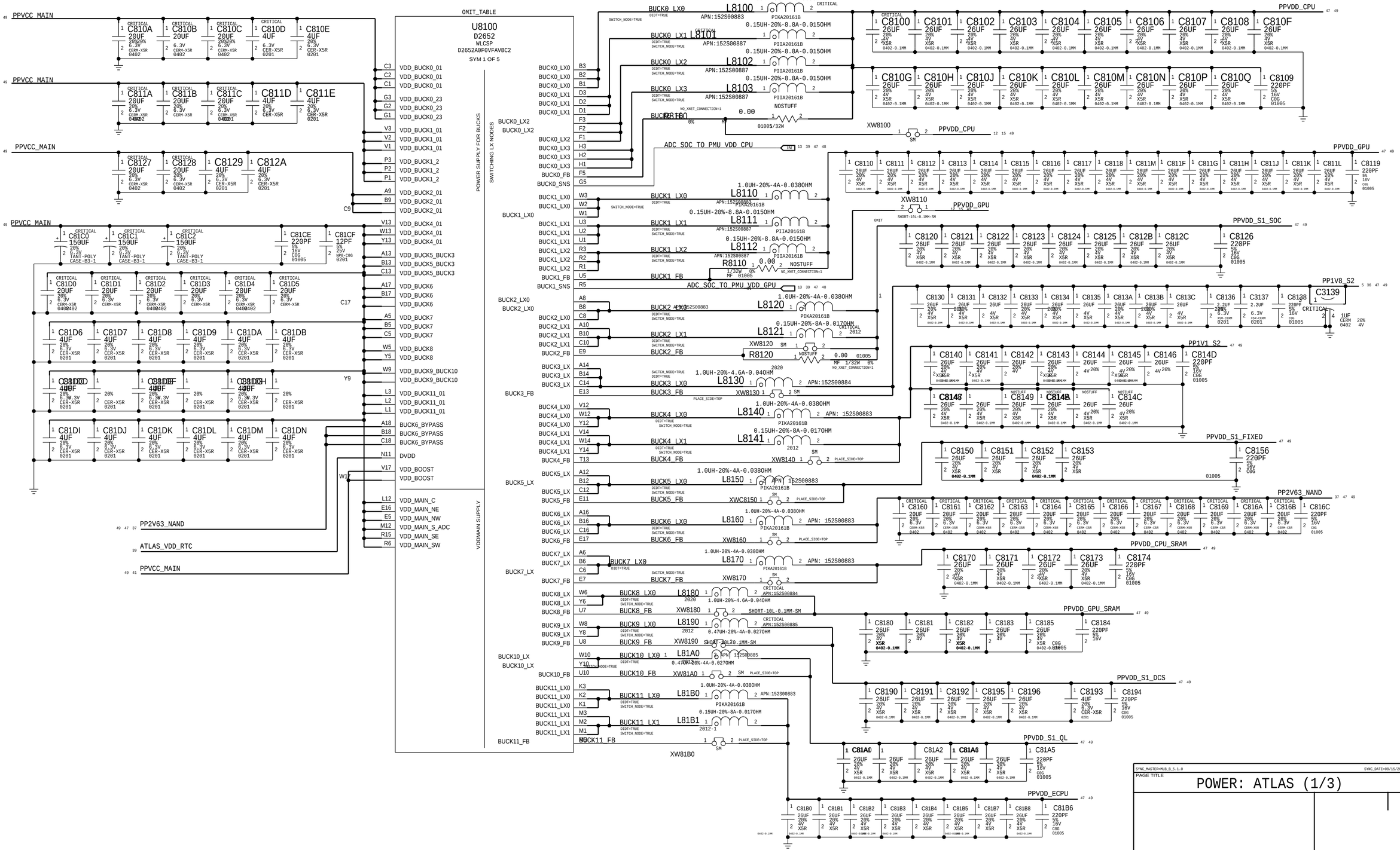
U8100
D2652
WLCSP
D2652A0F0VFAVBC2
SYM 1 OF 5
OMIT_TABLE
POWER SUPPLY FOR BUCKS
SWITCHING LX NODES
VDDMAIN SUPPLY
PPVCC_MAIN
PP2V63_NAND
ATLAS_VDD_RTC
PPVDD_CPU
PPVDD_GPU
PPVDD_S1_S0C
PP1V8_S2
PP1V1_S2
PPVDD_S1_FIXED
PP2V63_NAND
PPVDD_CPU_SRAM
PPVDD_GPU_SRAM
PPVDD_S1_DCS
PPVDD_S1_QL
PPVDD_ECPU
ADC_S0C_TO_PMU_VDD_CPU
ADC_S0C_TO_PMU_VDD_GPU
XW8100
XW8110
XW8120
XW8130
XW8140
XW8160
XW8170
XW8180
XW8190
XW81A0
XW81B0
L8100
L8101
L8102
L8103
L8110
L8111
L8112
L8120
L8121
L8130
L8140
L8141
L8150
L8160
L8170
L8180
L8190
L81A0
L81B0
L81B1
R8110
R8120
R8130
R8140
R8150
R8160
R8170
R8180
R8190
R81A0
R81B0
C3139
SYNC_MASTER=M1_B_5.1.0
SYNC_DATE=08/15/2018
PAGE TITLE
POWER: ATLAS (1/3)

ATLAS LDOS (2/3)

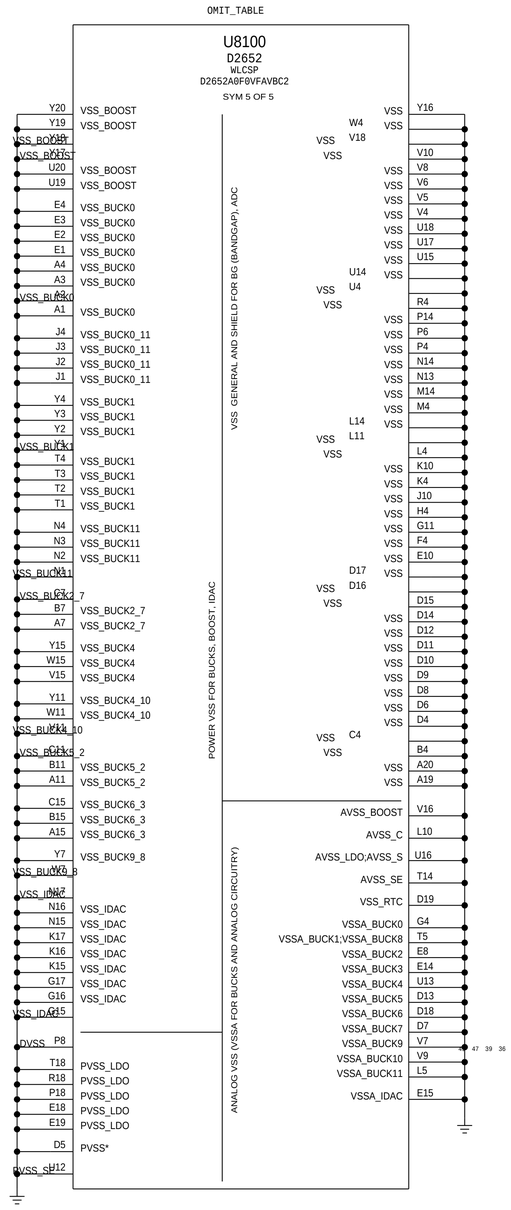

LDO INPUTS

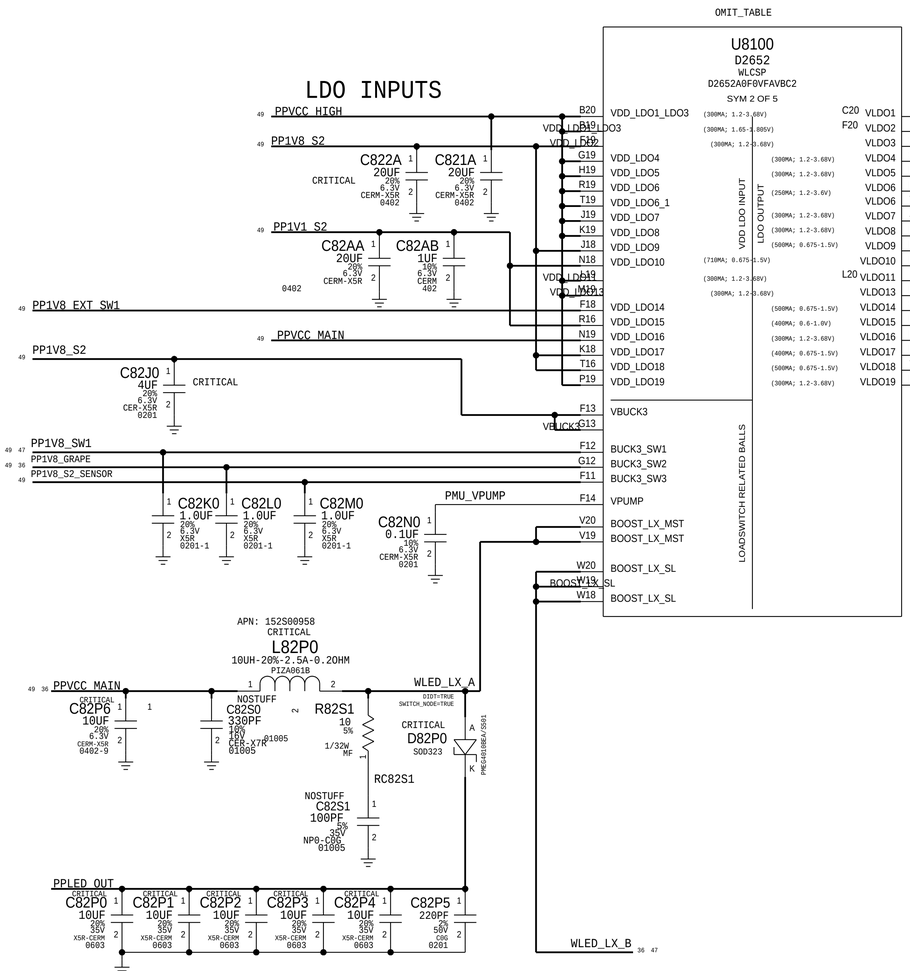

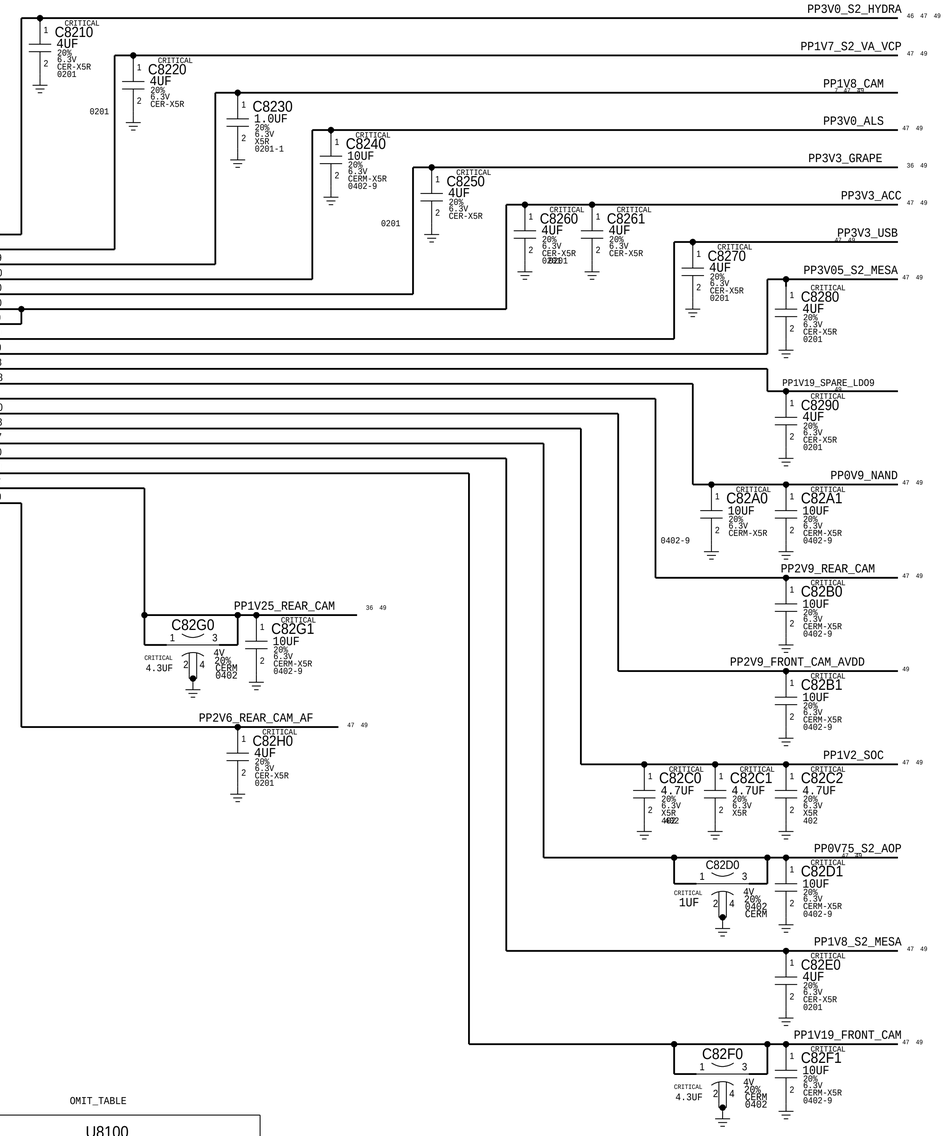

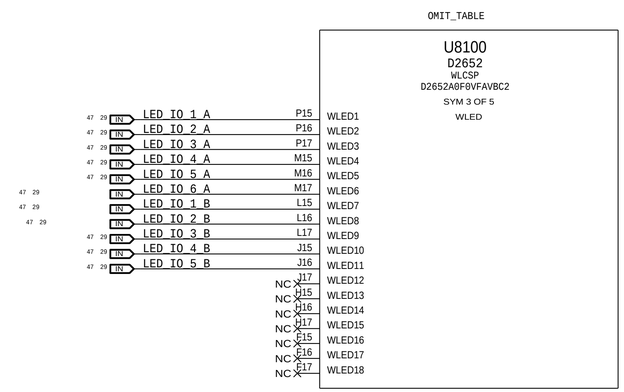

PART NUMBER	ALTERNATE FOR PART NUMBER	BOM OPTION	REF DES	COMMENTS:
138S0703	138S0648		C8233,ECT	ALT FOR 4.7UF,6.3V,0402

SYNC_MASTER=J211_MLB_B SYNC_DATE=07/05/2018

PAGE TITLE

POWER: ATLAS (2/3)

ATLAS (3/3)

PART NUMBER	ALTERNATE FOR PART NUMBER	BOM OPTION	REF DES	COMMENTS:
118S0764	118S0717		R8340	RDAR://PROBLEM/83803 67
107S0150	107S0208		R8321-R8328	RDAR://PROBLEM/83803 67

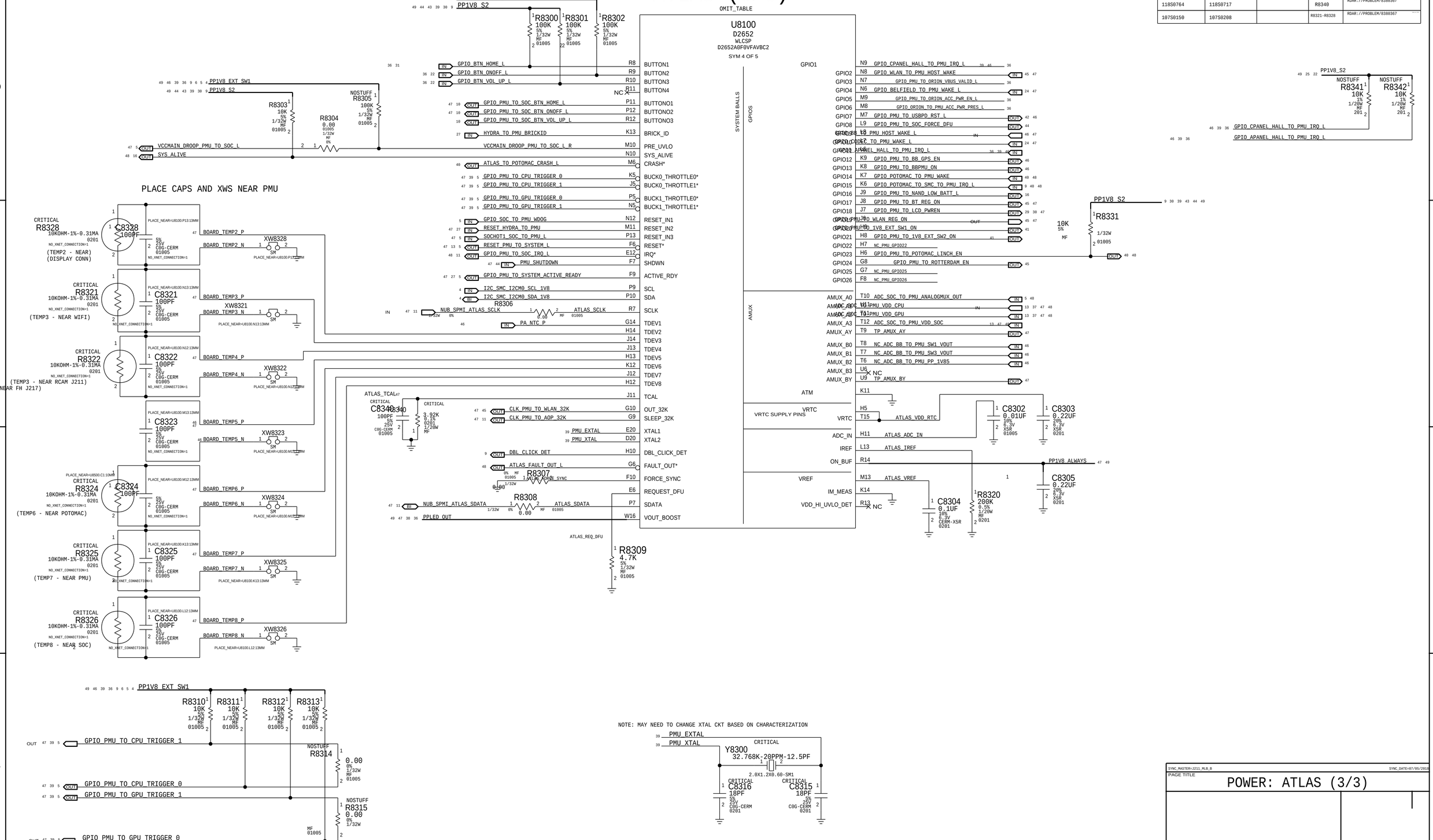

SYNC_MASTER=J211_MLB_B SYNC_DATE=07/05/2018

PAGE TITLE

POWER: ATLAS (3/3)

POTOMAC/RENO

PART NUMBER	ALTERNATE FOR PART NUMBER	BOM OPTION	REF DES	COMMENTS:
376S00071	376S00070		Q8581,ECT	RDAR://PROBLEM/28277540

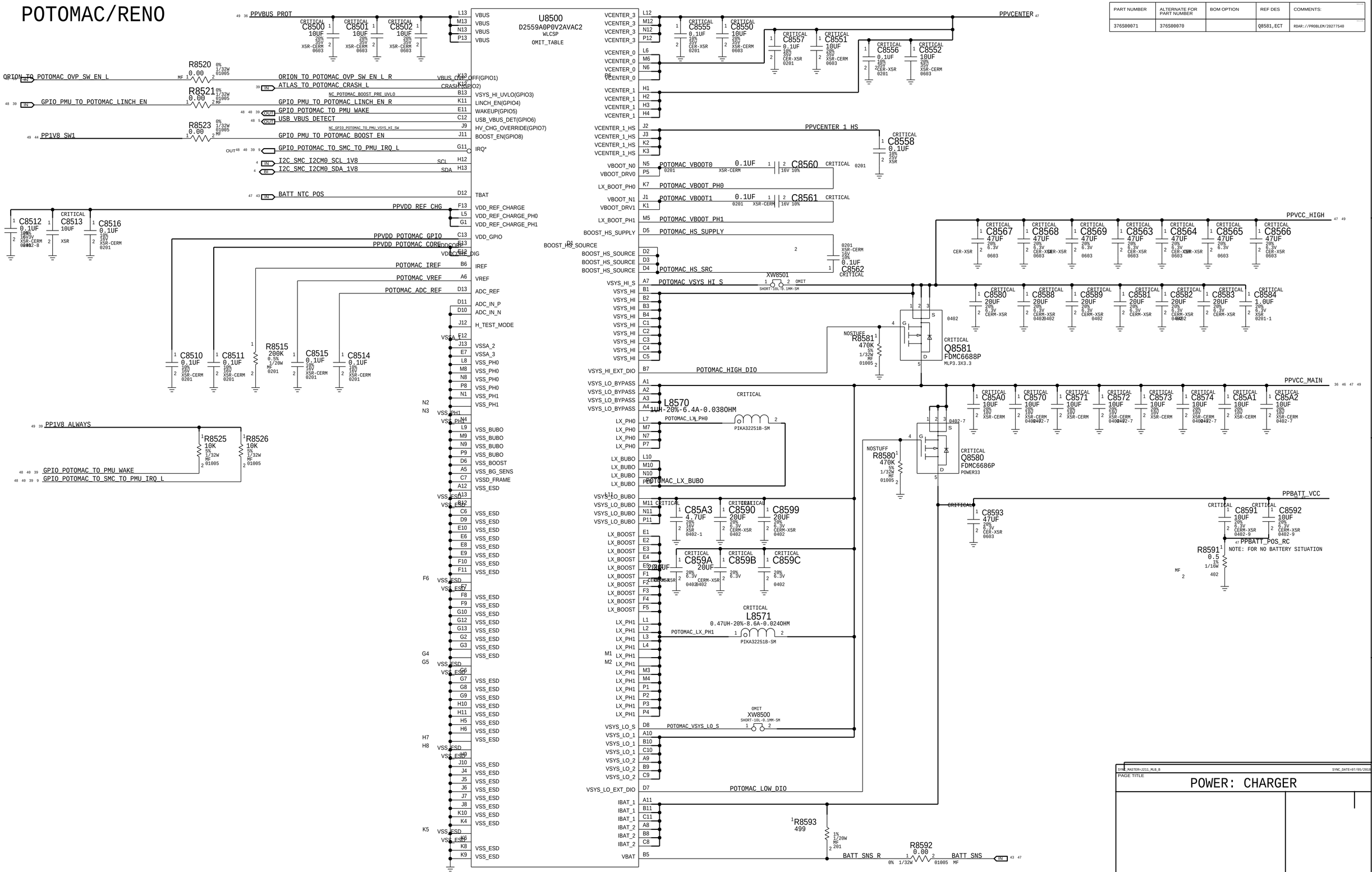

SYNC_MASTER=J211_MLB_B SYNC_DATE=07/05/2018

PAGE TITLE

POWER: CHARGER

EXTERNAL POWER SWITCHES

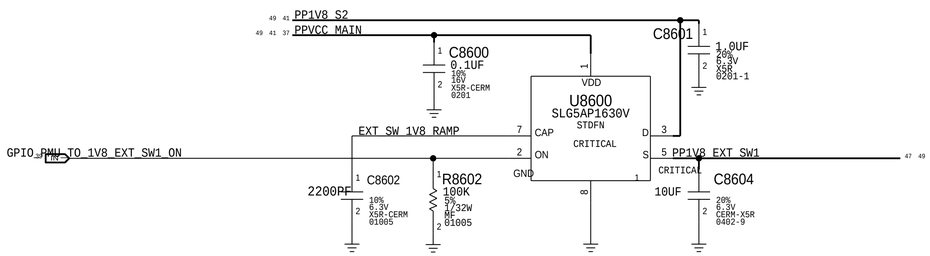

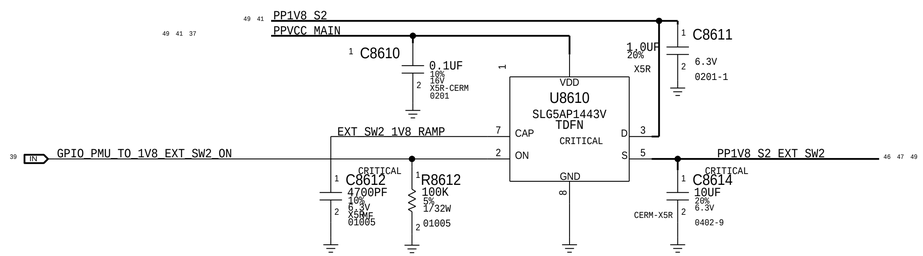

SYNC_MASTER=J251_MLB_B SYNC_DATE=07/05/2016

PAGE TITLE

POWER: EXTERNAL SWITCHES

USBPD

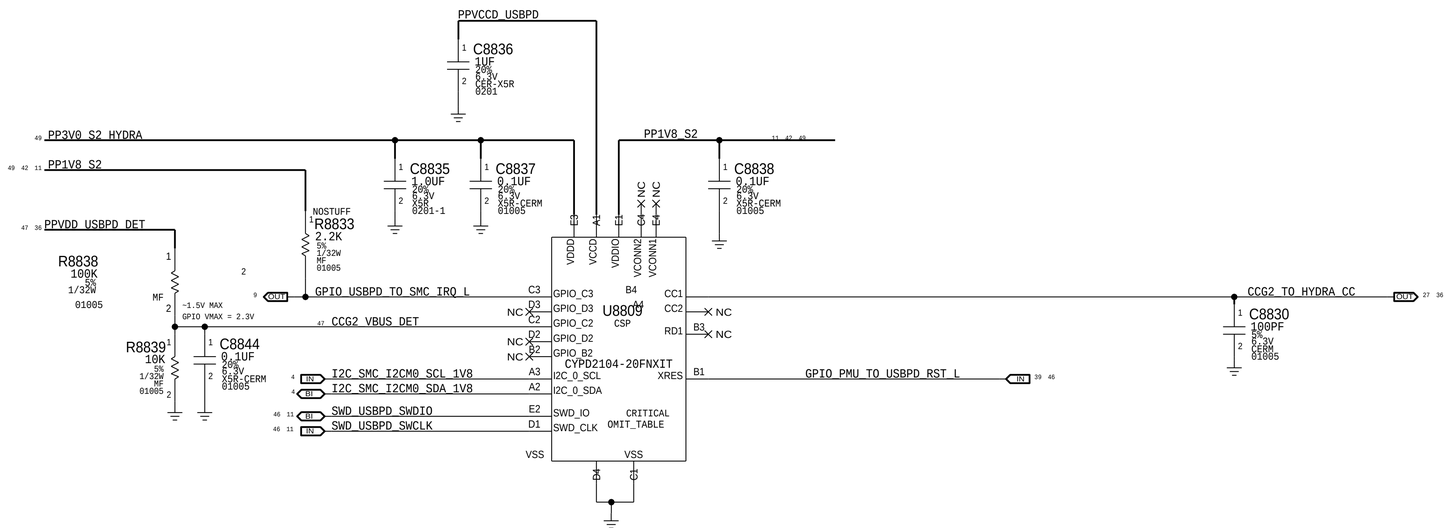

SYNC_MASTER=J211_MLB_B SYNC_DATE=07/05/2018

PAGE TITLE

POWER: USB PD

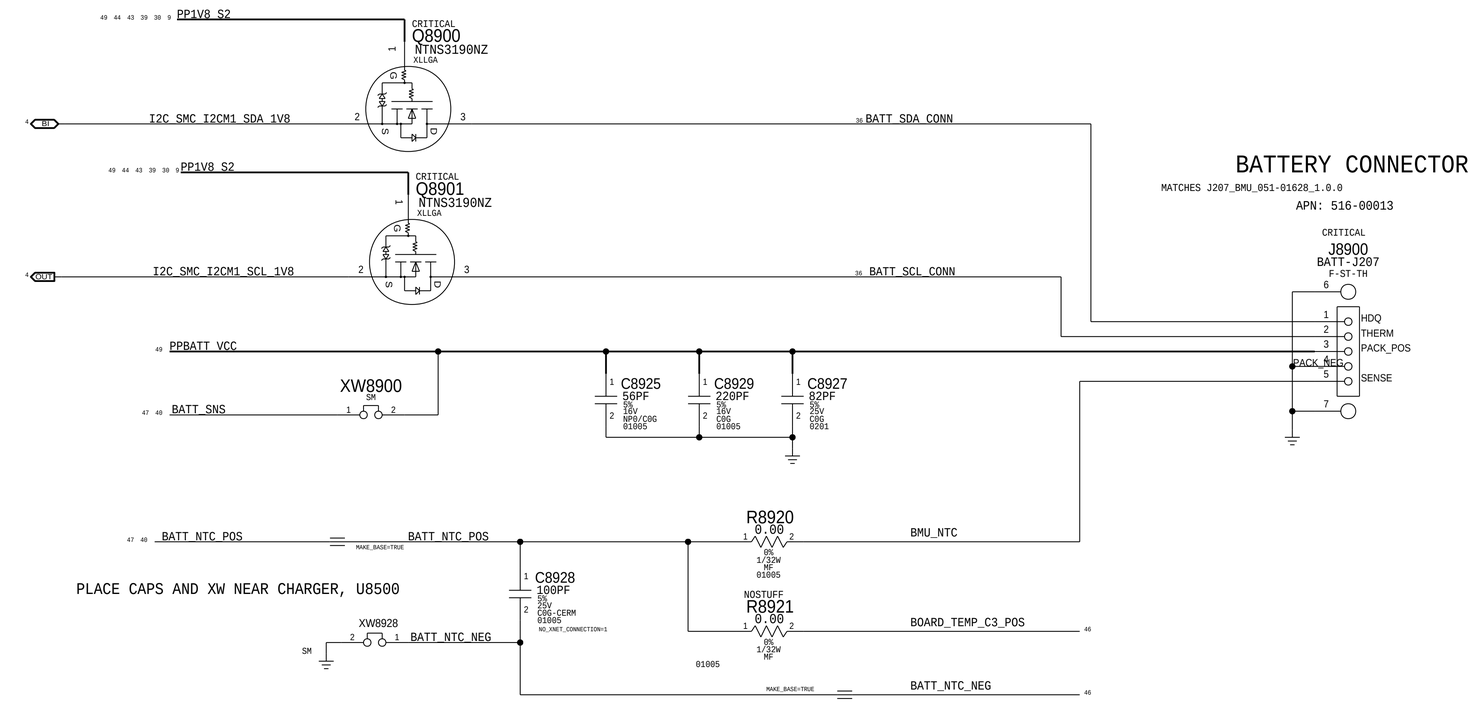

SYNC_MASTER=J207B_MLB_B SYNC_DATE=03/25/2018

PAGE TITLE

POWER: BATTERY & ORION CONN

DEBUG RESET ACCESS

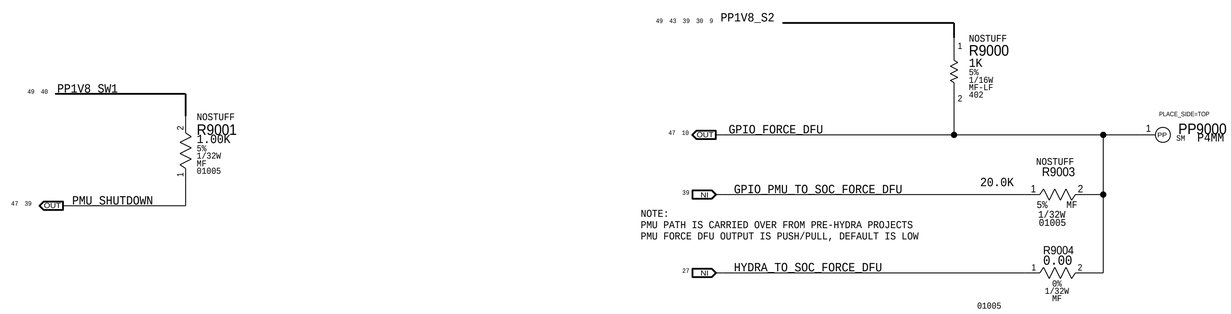

SYNC_MASTER=J251_MLB_B SYNC_DATE=07/05/2018

PAGE TITLE

SOC: DEBUG

WLAN/BT ALIASES

WLAN

POWER

49	PPVCC_MAIN		PPVCC_MAIN	32 33 34 46 53 61 69 70
49	PP1V8_S2_EXT_SW2		PP1V8_S2_EXT_SW2	32 33 34

GPIOS

47 39	IN	GPIO_PMU_TO_WLAN_REG_ON	MAKE_BASE=TRUE	GPIO_PMU_TO_WLAN_REG_ON	OUT 32 33
47 39	OUT	GPIO_WLAN_TO_PMU_HOST_WAKE	MAKE_BASE=TRUE	GPIO_WLAN_TO_PMU_HOST_WAKE	IN 32 33
CLK_PMU_TO_WLAN_32K	IN		MAKE_BASE=TRUE	CLK_PMU_TO_WLAN_32K	OUT 32 33
47 11	IN	GPIO_AOP_TO_WLAN_CONTEXT_A	MAKE_BASE=TRUE	GPIO_AOP_TO_WLAN_CONTEXT_A	OUT 32 33
47 11	IN	GPIO_AOP_TO_WLAN_CONTEXT_B	MAKE_BASE=TRUE	GPIO_AOP_TO_WLAN_CONTEXT_B	OUT 32 33
47 10	OUT	GPIO_WLAN_TO_SOC_TIME_SYNC	MAKE_BASE=TRUE	GPIO_WLAN_TO_SOC_TIME_SYNC	IN 32 33
		NC_GPIO_WLAN_TO_SCORPIUS_TX_IND	MAKE_BASE=TRUE	NC_GPIO_WLAN_TO_SCORPIUS_TX_IND	IN 32 33

UART (SHARED WITH BT)

PCIE

PCIE_SOC_TO_WLAN_REFCLK_P	IN		MAKE_BASE=TRUE	PCIE_SOC_TO_WLAN_REFCLK_P	OUT 32 33
6	IN	PCIE_SOC_TO_WLAN_REFCLK_N	MAKE_BASE=TRUE	PCIE_SOC_TO_WLAN_REFCLK_N	OUT 32 33
6	IN	PCIE_SOC_TO_WLAN_TX_P	MAKE_BASE=TRUE	PCIE_SOC_TO_WLAN_TX_P	OUT 32 33
6	IN	PCIE_SOC_TO_WLAN_TX_N	MAKE_BASE=TRUE	PCIE_SOC_TO_WLAN_TX_N	OUT 32 33
45		PCIE_WLAN_TO_SOC_TX_C_P	MAKE_BASE=TRUE	PCIE_WLAN_TO_SOC_TX_C_P	IN 32 33
45		PCIE_WLAN_TO_SOC_TX_C_N	MAKE_BASE=TRUE	PCIE_WLAN_TO_SOC_TX_C_N	IN 32 33
48 6	OUT	PCIE_WLAN_TO_SOC_CLKREQ_L	MAKE_BASE=TRUE	PCIE_WLAN_TO_SOC_CLKREQ_L	IN 32 33
48 6	IN	PCIE_SOC_TO_WLAN_RESET_L	MAKE_BASE=TRUE	PCIE_SOC_TO_WLAN_RESET_L	OUT 32 33

GND_VOID=TRUE

48 6 PCIE_WLAN_TO_SOC_TX_P — C9160 (1, 2) 0.1UF X5R-CERM 20% 6.3V 01005 — PCIE_WLAN_TO_SOC_TX_C_P

48 6 PCIE_WLAN_TO_SOC_TX_N — C9161 (1, 2) 0.1UF 20% 6.3V X5R-CERM 01005 — PCIE_WLAN_TO_SOC_TX_C_N 45

GND_VOID=TRUE

BLUETOOTH

SOC GPIOS

DIETCOKE COMBINES BT AND WLAN WAKE TO PMU

47 39	IN	GPIO_PMU_TO_BT_REG_ON	MAKE_BASE=TRUE	GPIO_PMU_TO_BT_REG_ON	OUT 32 33
10	IN	GPIO_SOC_BT_DEVICE_WAKE	MAKE_BASE=TRUE	GPIO_SOC_BT_DEVICE_WAKE	OUT 32 33

UART

10	IN	UART_SOC_TO_BT_TX	MAKE_BASE=TRUE	UART_SOC_TO_BT_TX	OUT 32 33
10	IN	UART_SOC_TO_BT_RTS_L	MAKE_BASE=TRUE	UART_SOC_TO_BT_RTS_L	OUT 32 33
UART_BT_TO_SOC_TX	OUT		MAKE_BASE=TRUE	UART_BT_TO_SOC_TX	IN 32 33
10	OUT	UART_BT_TO_SOC_RTS_L	MAKE_BASE=TRUE	UART_BT_TO_SOC_RTS_L	IN 32 33
48 45 33 32 19 18 10	IN	GPIO_SOC_TO_BT_TO_GRAPE_TS_SYNC	MAKE_BASE=TRUE	GPIO_SOC_TO_BT_TO_GRAPE_TS_SYNC	OUT 10 18 19 32 33 45 48
48 45 33 32 18	IN	GPIO_TOUCH_TO_BT_SYNC	MAKE_BASE=TRUE	GPIO_TOUCH_TO_BT_SYNC	OUT 18 32 33 45 48
		NC_BT_TO_SCORPIUS_TX_IND	MAKE_BASE=TRUE	NC_BT_TO_SCORPIUS_TX_IND	IN 32 33
10	OUT	BT_AUDIO_SYNC	MAKE_BASE=TRUE	BT_AUDIO_SYNC	IN 33

ROTTERDAM

POWER

PPVCC_MAIN = PP_VDD_MAIN (VCCMAIN ROTTERDAM CONNECTED THROUGH RADIO PPVCC_MAIN ALIAS)

49		PP1V8_S2_EXT_SW2		PP1V8_S2_EXT_SW2	70

GPIOS

70 45 9	IN	GPIO_SOC_TO_ROTTERDAM_DEV_WAKE	MAKE_BASE=TRUE	GPIO_SOC_TO_ROTTERDAM_DEV_WAKE	OUT 9 45 70
70 45 10	IN	GPIO_SOC_TO_ROTTERDAM_DWLD_REQ	MAKE_BASE=TRUE	GPIO_SOC_TO_ROTTERDAM_DWLD_REQ	OUT 10 45 70
39	IN	GPIO_PMU_TO_ROTTERDAM_EN	MAKE_BASE=TRUE	GPIO_PMU_TO_ROTTERDAM_EN	OUT 70

UART

70 45 10	IN	UART_SOC_TO_ROTTERDAM_TX	MAKE_BASE=TRUE	UART_SOC_TO_ROTTERDAM_TX	OUT 10 45 70
70 45 10	OUT	UART_ROTTERDAM_TO_SOC_TX	MAKE_BASE=TRUE	UART_ROTTERDAM_TO_SOC_TX	IN 10 45 70
70 45 10	IN	UART_SOC_TO_ROTTERDAM_RTS_L	MAKE_BASE=TRUE	UART_SOC_TO_ROTTERDAM_RTS_L	OUT 10 45 70
70 45 10	OUT	UART_ROTTERDAM_TO_SOC_RTS_L	MAKE_BASE=TRUE	UART_ROTTERDAM_TO_SOC_RTS_L	IN 10 45 70

CONFIDENTIAL AND PROPRIETARY APPLE SYSTEM DESIGN. FOR REFERENCE PURPOSE ONLY - NOT A CHANGE REQUEST

SYNC_MASTER=J211_MLB_B SYNC_DATE=07/05/2018

PAGE TITLE

ALIASES: WLAN/BT

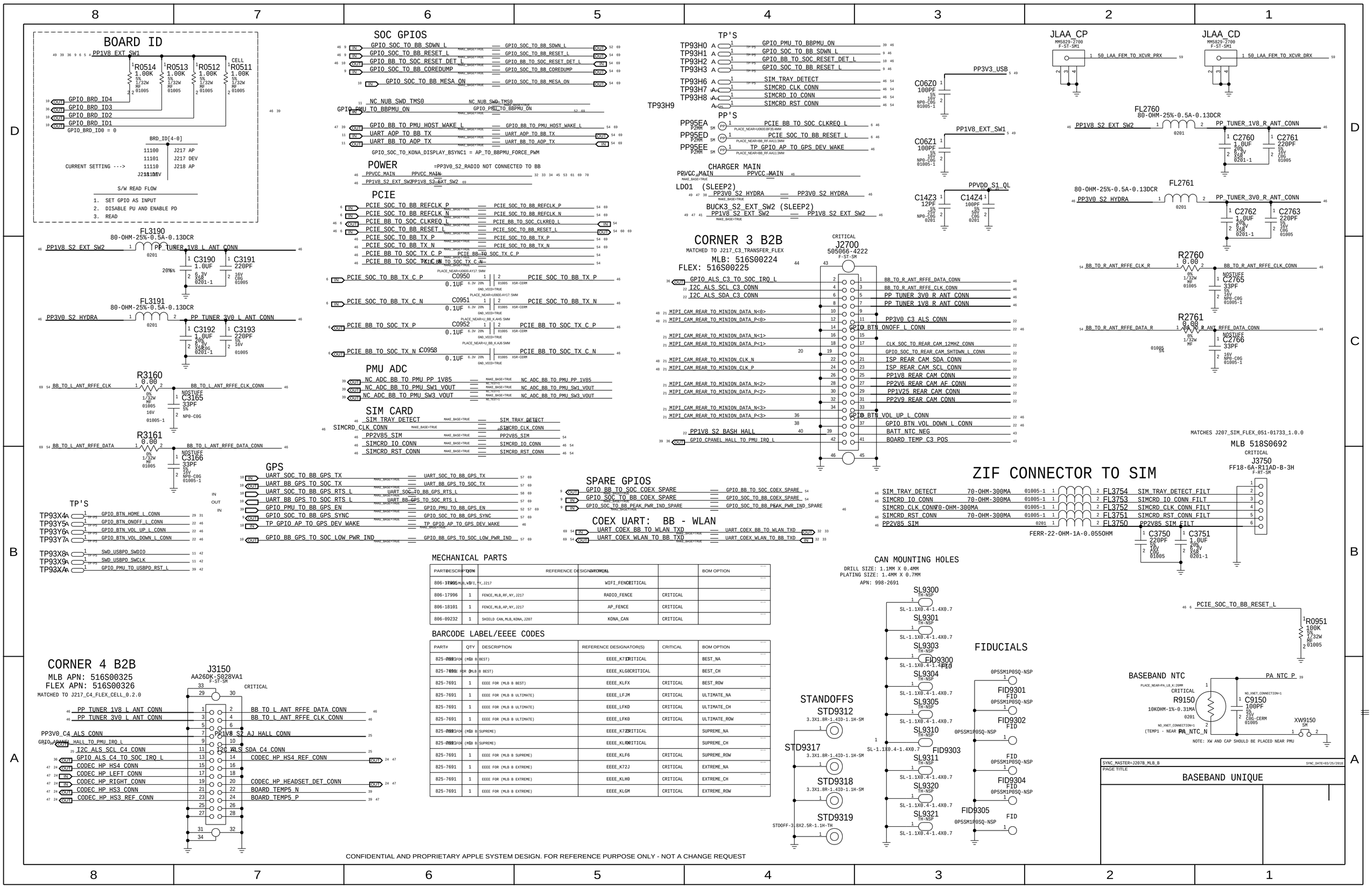
BOARD ID
PP1V8_EXT_SW1
R0514 1.00K 5% 1/32W MF 01005
R0513 1.00K 5% 1/32W MF 01005
R0512 1.00K 5% 1/32W MF 01005
CELL R0511 1.00K 5% 1/32W MF 01005
GPIO_BRD_ID4
GPIO_BRD_ID3
GPIO_BRD_ID2
GPIO_BRD_ID1
GPIO_BRD_ID0 = 0
BRD_ID[4-0]
11100 J217 AP
11101 J217 DEV
11110 J218 AP
CURRENT SETTING ---> J218 DEV
S/W READ FLOW
1. SET GPIO AS INPUT
2. DISABLE PU AND ENABLE PD
3. READ
SOC GPIOS
GPIO_SOC_TO_BB_SDWN_L
GPIO_SOC_TO_BB_RESET_L
GPIO_BB_TO_SOC_RESET_DET_L
GPIO_SOC_TO_BB_COREDUMP
GPIO_SOC_TO_BB_MESA_ON
NC_NUB_SWD_TMS0
GPIO_PMU_TO_BBPMU_ON
GPIO_BB_TO_PMU_HOST_WAKE_L
UART_AOP_TO_BB_TX
UART_BB_TO_AOP_TX
GPIO_SOC_TO_KONA_DISPLAY_BSYNC1 = AP_TO_BBPMU_FORCE_PWM
POWER
=PP3V0_S2_RADIO NOT CONNECTED TO BB
PPVCC_MAIN
PP1V8_S2_EXT_SW2
PCIE
PCIE_SOC_TO_BB_REFCLK_P
PCIE_SOC_TO_BB_REFCLK_N
PCIE_BB_TO_SOC_CLKREQ_L
PCIE_SOC_TO_BB_RESET_L
PCIE_SOC_TO_BB_TX_P
PCIE_SOC_TO_BB_TX_N
PCIE_BB_TO_SOC_TX_C_P
PCIE_BB_TO_SOC_TX_C_N
FL3190 80-OHM-25%-0.5A-0.13DCR
PP1V8_S2_EXT_SW2
PP_TUNER_1V8_L_ANT_CONN
C3190 1.0UF 20% 6.3V X5R 0201-1
C3191 220PF 5% 16V C0G 01005
FL3191 80-OHM-25%-0.5A-0.13DCR
PP3V0_S2_HYDRA
PP_TUNER_3V0_L_ANT_CONN
C3192 1.0UF 20% 6.3V X5R C0G 0201-1
C3193 220PF 5% 16V 01005
R3160 0.00 0% 1/32W MF 01005 16V 01005-1
BB_TO_L_ANT_RFFE_CLK
BB_TO_L_ANT_RFFE_CLK_CONN
C3165 33PF 5% 16V NP0-C0G 01005-1
R3161 0.00 0% 1/32W MF 01005
BB_TO_L_ANT_RFFE_DATA
BB_TO_L_ANT_RFFE_DATA_CONN
C3166 33PF 5% 16V NP0-C0G 01005-1
C0950 0.1UF 6.3V 20% 01005 X5R-CERM
C0951 0.1UF 6.3V 20% 01005 X5R-CERM
C0952 0.1UF 6.3V 20% 01005 X5R-CERM
C0953 0.1UF 6.3V 20% 01005 X5R-CERM
PMU ADC
NC_ADC_BB_TO_PMU_PP_1V85
NC_ADC_BB_TO_PMU_SW1_VOUT
NC_ADC_BB_TO_PMU_SW3_VOUT
SIM CARD
SIM_TRAY_DETECT
SIMCRD_CLK_CONN
PP2V85_SIM
SIMCRD_IO_CONN
SIMCRD_RST_CONN
TP'S
TP93H0
TP93H1
TP93H2
TP93H3
TP93H6
TP93H7
TP93H8
TP93H9
GPIO_PMU_TO_BBPMU_ON
GPIO_SOC_TO_BB_SDWN_L
GPIO_BB_TO_SOC_RESET_DET_L
GPIO_SOC_TO_BB_RESET_L
SIM_TRAY_DETECT
SIMCRD_CLK_CONN
SIMCRD_IO_CONN
SIMCRD_RST_CONN
PP'S
PP95EA PCIE_BB_TO_SOC_CLKREQ_L
PP95ED PCIE_SOC_TO_BB_RESET_L
PP95EE TP_GPIO_AP_TO_GPS_DEV_WAKE
CHARGER MAIN
PPVCC_MAIN
LDO1 (SLEEP2)
PP3V0_S2_HYDRA
BUCK3_S2_EXT_SW2 (SLEEP2)
PP1V8_S2_EXT_SW2
CORNER 3 B2B
MATCHED TO J217_C3_TRANSFER_FLEX
MLB: 516S00224
FLEX: 516S00225
J2700 505066-4222 F-ST-SM
GPIO_ALS_C3_TO_SOC_IRQ_L
I2C_ALS_SCL_C3_CONN
I2C_ALS_SDA_C3_CONN
MIPI_CAM_REAR_TO_MINION_DATA_N<0>
MIPI_CAM_REAR_TO_MINION_DATA_P<0>
MIPI_CAM_REAR_TO_MINION_DATA_N<1>
MIPI_CAM_REAR_TO_MINION_DATA_P<1>
MIPI_CAM_REAR_TO_MINION_CLK_N
MIPI_CAM_REAR_TO_MINION_CLK_P
MIPI_CAM_REAR_TO_MINION_DATA_N<2>
MIPI_CAM_REAR_TO_MINION_DATA_P<2>
MIPI_CAM_REAR_TO_MINION_DATA_N<3>
MIPI_CAM_REAR_TO_MINION_DATA_P<3>
PP1V8_S2_BASH_HALL
GPIO_CPANEL_HALL_TO_PMU_IRQ_L
BB_TO_R_ANT_RFFE_DATA_CONN
BB_TO_R_ANT_RFFE_CLK_CONN
PP_TUNER_3V0_R_ANT_CONN
PP_TUNER_1V8_R_ANT_CONN
PP3V0_C3_ALS_CONN
GPIO_BTN_ONOFF_L_CONN
CLK_SOC_TO_REAR_CAM_12MHZ_CONN
GPIO_SOC_TO_REAR_CAM_SHTDWN_L_CONN
ISP_REAR_CAM_SDA_CONN
ISP_REAR_CAM_SCL_CONN
PP1V8_REAR_CAM_CONN
PP2V6_REAR_CAM_AF_CONN
PP1V25_REAR_CAM_CONN
PP2V9_REAR_CAM_CONN
GPIO_BTN_VOL_UP_L_CONN
GPIO_BTN_VOL_DOWN_L_CONN
BATT_NTC_NEG
BOARD_TEMP_C3_POS
PP3V3_USB
C06Z0 100PF 5% 16V NP0-C0G 01005-1
PP1V8_EXT_SW1
C06Z1 100PF 5% 16V NP0-C0G 01005-1
PPVDD_S1_QL
C14Z3 12PF 5% 25V NP0-C0G 0201
C14Z4 100PF 5% 50V C0G 0201
JLAA_CP
JLAA_CD
50_LAA_FEM_TO_XCVR_PRX
50_LAA_FEM_TO_XCVR_DRX
FL2760 80-OHM-25%-0.5A-0.13DCR
PP1V8_S2_EXT_SW2
PP_TUNER_1V8_R_ANT_CONN
C2760 1.0UF 20% 6.3V X5R 0201-1
C2761 220PF 5% 16V C0G 01005
FL2761 80-OHM-25%-0.5A-0.13DCR
PP3V0_S2_HYDRA
PP_TUNER_3V0_R_ANT_CONN
C2762 1.0UF 20% 6.3V X5R 0201-1
C2763 220PF 5% 16V C0G 01005
R2760 0.00 0% 1/32W MF 01005
BB_TO_R_ANT_RFFE_CLK_R
BB_TO_R_ANT_RFFE_CLK_CONN
NOSTUFF C2765 33PF 5% 16V NP0-C0G 01005-1
R2761 0.00 0% 1/32W MF 01005
BB_TO_R_ANT_RFFE_DATA_R
BB_TO_R_ANT_RFFE_DATA_CONN
NOSTUFF C2766 33PF 5% 16V NP0-C0G 01005-1
MATCHES J207_SIM_FLEX_051-01733_1.0.0
MLB 518S0692
J3750 FF18-6A-R11AD-B-3H F-RT-SM
ZIF CONNECTOR TO SIM
SIM_TRAY_DETECT
SIMCRD_IO_CONN
SIMCRD_CLK_CONN
SIMCRD_RST_CONN
PP2V85_SIM
70-OHM-300MA 01005-1
FL3754 SIM_TRAY_DETECT_FILT
FL3753 SIMCRD_IO_CONN_FILT
FL3752 SIMCRD_CLK_CONN_FILT
FL3751 SIMCRD_RST_CONN_FILT
FL3750 PP2V85_SIM_FILT
FERR-22-OHM-1A-0.055OHM
C3750 220PF 5% 16V C0G 01005
C3751 1.0UF 20% 6.3V X5R 0201-1
GPS
UART_SOC_TO_BB_GPS_TX
UART_BB_GPS_TO_SOC_TX
UART_SOC_TO_BB_GPS_RTS_L
UART_BB_GPS_TO_SOC_RTS_L
GPIO_PMU_TO_BB_GPS_EN
GPIO_SOC_TO_BB_GPS_SYNC
TP_GPIO_AP_TO_GPS_DEV_WAKE
GPIO_BB_GPS_TO_SOC_LOW_PWR_IND
SPARE GPIOS
GPIO_BB_TO_SOC_COEX_SPARE
GPIO_SOC_TO_BB_COEX_SPARE
GPIO_SOC_TO_BB_PEAK_PWR_IND_SPARE
COEX UART: BB - WLAN
UART_COEX_BB_TO_WLAN_TXD
UART_COEX_WLAN_TO_BB_TXD
TP'S
TP93X4
TP93Y5
TP93Y6
TP93Y7
TP93X8
TP93X9
TP93XA
GPIO_BTN_HOME_L_CONN
GPIO_BTN_ONOFF_L_CONN
GPIO_BTN_VOL_UP_L_CONN
GPIO_BTN_VOL_DOWN_L_CONN
SWD_USBPD_SWDIO
SWD_USBPD_SWCLK
GPIO_PMU_TO_USBPD_RST_L
MECHANICAL PARTS
BARCODE LABEL/EEEE CODES
CAN MOUNTING HOLES
DRILL SIZE: 1.1MM X 0.4MM
PLATING SIZE: 1.4MM X 0.7MM
APN: 998-2691
SL9300 TH-NSP
SL9301 TH-NSP
SL9303 TH-NSP
SL9304 TH-NSP
SL9305 TH-NSP
SL9310 TH-NSP
SL9311 TH-NSP
SL9320 TH-NSP
SL9321 TH-NSP
SL-1.1X0.4-1.4X0.7
FID9300
FID9303
FIDUCIALS
0P5SM1P0SQ-NSP
FID9301
FID9302
FID9304
FID9305
STANDOFFS
STD9312 3.3X1.8R-1.4ID-1.1H-SM
STD9317 3.3X1.8R-1.4ID-1.1H-SM
STD9318 3.3X1.8R-1.4ID-1.1H-SM
STD9319 STDOFF-3.8X2.5R-1.1H-TH
R0951 100K 5% 1/32W MF 01005
PCIE_SOC_TO_BB_RESET_L
BASEBAND NTC
PA_NTC_P
R9150 10KOHM-1%-0.31MA 0201
C9150 100PF 5% 25V C0G-CERM 01005
XW9150 SM
NOTE: XW AND CAP SHOULD BE PLACED NEAR PMU
J3150 AA26DK-S028VA1 F-ST-SM
CORNER 4 B2B
MLB APN: 516S00325
FLEX APN: 516S00326
MATCHED TO J217_C4_FLEX_CELL_0.2.0
PP_TUNER_1V8_L_ANT_CONN
PP_TUNER_3V0_L_ANT_CONN
PP3V0_C4_ALS_CONN
GPIO_APANEL_HALL_TO_PMU_IRQ_L
I2C_ALS_SCL_C4_CONN
GPIO_ALS_C4_TO_SOC_IRQ_L
CODEC_HP_HS4_CONN
CODEC_HP_LEFT_CONN
CODEC_HP_RIGHT_CONN
CODEC_HP_HS3_CONN
CODEC_HP_HS3_REF_CONN
BB_TO_L_ANT_RFFE_DATA_CONN
BB_TO_L_ANT_RFFE_CLK_CONN
PP1V8_S2_AJ_HALL_CONN
I2C_ALS_SDA_C4_CONN
CODEC_HP_HS4_REF_CONN
CODEC_HP_HEADSET_DET_CONN
BOARD_TEMP5_N
BOARD_TEMP5_P
SYNC_MASTER=J207B_MLB_B
SYNC_DATE=03/25/2019
PAGE TITLE
BASEBAND UNIQUE
CONFIDENTIAL AND PROPRIETARY APPLE SYSTEM DESIGN. FOR REFERENCE PURPOSE ONLY - NOT A CHANGE REQUEST

SMT TEST FIXTURE TP

POWER - BUCKS

TP9301	PPVDD_CPU	37 49
TP9302	PPVDD_GPU	37 49
TP9303	PPVDD_S1_SOC	37 49
TP9304	PP1V8_S2	5 36 37 49
TP9305	PP1V8_SW1	38 49
TP9306	PP1V8_EXT_SW1	41 49
TP9307	PP1V8_CAM	7 38 49
TP9308	PP1V8_S2_EXT_SW2	41 46 49
TP9311	PP1V1_S2	37 49
TP9313	PPVDD_S1_FIXED	37 49
TP9316	PP2V63_NAND	37 49
TP9319	PPVDD_CPU_SRAM	37 49
TP9320	PPVDD_GPU_SRAM	37 49
TP9321	PPVDD_ECPU	37 49
TP938C	PPVDD_S1_DCS	37 49
TP938D	PPVDD_S1_QL	37 49

POWER - LDOS

TP9322	PP3V0_S2_HYDRA	38 46 49
TP9323	PP1V7_S2_VA_VCP	38 49
TP9324	PP2V6_REAR_CAM_AF	38 49
TP9325	PP3V0_ALS	38 49
TP9327	PP3V3_ACC	38 49
TP9328	PP3V3_USB	38 49
TP9329	PP3V05_S2_MESA	38 49
TP9330	PP1V19_FRONT_CAM	38 49
TP9331	PP0V9_NAND	38 49
TP9333	PP2V9_REAR_CAM	38 49
TP9334	PP1V2_SOC	38 49
TP9335	PP0V75_S2_AOP	38 49
TP9336	PP1V8_S2_MESA	38 49

POWER - OTHER

TP934Q	PPVCENTER	40
TP934R	"PPVBUS" PROT	49
TP9342	PPVCC_HIGH	40 49
TP9343	PP1V8_ALWAYS	39 49
TP9345	PPLED_OUT	36 38 39 49
TP9346	PPVCC_MAIN	36 40 46 47 49
TP9347	PPVCC_MAIN	36 40 46 47 49
TP9348	PPBATT_POS_RC	40
TP934A	PP16V0_MESA	31

POWER - CAMERA (NH)

TP9352	PP2V9_FRONT_CAM_AVDD	23 49

POWER - DISPLAY

TP9360	PPVCC_MAIN_LCD_SW_CONN	29 30
TP9361	PPVCC_MAIN_LCD_SW	30

POWER - BACKLIGHT

TP9362	PPLED_BACK_REG_A	29 30 47
TP9368	PPLED_BACK_REG_A	29 30 47
TP9363	LED_IO_1_A	29 38
TP9364	LED_IO_2_A	29 38
TP9365	LED_IO_3_A	29 38
TP9366	LED_IO_4_A	29 38
TP9367	LED_IO_5_A	29 38
TP9374	LED_IO_6_A	29 38
TP9369	LED_IO_1_B	29 38
TP937Q	LED_IO_2_B	29 38
TP937R	LED_IO_3_B	29 38
TP9372	LED_IO_4_B	29 38
TP9373	LED_IO_5_B	29 38
TP9375	WLED_LX_A	38
TP9376	WLED_LX_B	36 38

BATTERY

TP9381	BATT_NTC_POS	40 43
TP9382	BATT_SNS	40 43

HYDRA

TP938A	GPIO_HYDRA_TO_SMC_IRQ	11 27
TP938B	RESET_HYDRA_TO_PMU	27 39

USBPD

TP938E	PPVDD_USBPD_DET	36 42
TP938F	CCG2_VBUS_DET	42

TP9390	PLACE_NEAR=J3700.19:20MM	TP-1P0-TOP
TP9391	PLACE_NEAR=J3700.19:20MM	TP-1P0-TOP
TP9392	PLACE_NEAR=J3700.19:20MM	TP-1P0-TOP; PPVBUS_USB_EMI 27 36 47
TP9394	PLACE_NEAR=J3700.9:30MM	TP-1P0-TOP
TP9396	PLACE_NEAR=J8900.4:15MM	TP-1P0-TOP
TP9397	PLACE_NEAR=J8900.4:15MM	TP-1P0-TOP
TP9398	PLACE_NEAR=J8900.4:15MM	TP-1P0-TOP

PMU

TP93A0	GPIO_WLAN_TO_PMU_HOST_WAKE 39 45
TP93A2	GPIO_BB_TO_PMU_HOST_WAKE_L 39 46
TP93A3	ATLAS_TCAL 39
TP93A5	BOARD_TEMP2_P 39
TP93A6	BOARD_TEMP3_P 39
TP93A7	BOARD_TEMP4_P 39
TP93A8	BOARD_TEMP5_P 39 46
TP93A9	BOARD_TEMP6_P 39
TP93B0	BOARD_TEMP7_P 39
TP93B1	BOARD_TEMP8_P 39
TP93B4	TP_AMUX_AY 39
TP93B5	TP_AMUX_BY 39
TP93B7	NUB_SPMI_ATLAS_SDATA 11 39
TP93B8	NUB_SPMI_ATLAS_SCLK 11 39
TP93B9	GPIO_PMU_TO_CPU_TRIGGER_0 5 39
TP93BA	GPIO_PMU_TO_CPU_TRIGGER_1 5 39
TP93BB	VCCMAIN_DROOP_PMU_TO_SOC_L 5 39
TP93BC	SOCHOT1_SOC_TO_PMU_L 5 39
TP93BD	PMU_SHUTDOWN 39 44
TP93BE	GPIO_PMU_TO_GPU_TRIGGER_0 5 39
TP93BF	GPIO_PMU_TO_GPU_TRIGGER_1 5 39
TP93BI	GPIO_PMU_TO_SOC_BTN_HOME_L 10 39
TP93BJ	GPIO_PMU_TO_SOC_BTN_ONOFF_L 10 39

SOC - JTAG/RESET

TP93C1	JTAG_SOC_SEL 4 5
TP93C2	JTAG_SOC_TCK 5 27
TP93C3	JTAG_SOC_TMS 5 27
TP93C4	JTAG_SOC_TDI 5
TP93C5	JTAG_SOC_TRST_L 4 5
TP93C6	JTAG_SOC_TDO 5
TP93C7	SOC_TESTMODE 4 5
TP93C8	RESET_PMU_TO_SYSTEM_L 5 13 39
TP93C9	GPIO_FORCE_DFU 10 44
TP93CA	TP_SOC_DFU_STATUS 10
TP93CB	TST_CLKOUT 5
TP93CC	GPIO_PMU_TO_SYSTEM_ACTIVE_READY 5 27 39

SOC - UART

TP93D0	UART_SOC_TO_DEBUG_TX 10 27
TP93D1	UART_DEBUG_TO_SOC_TX 10 27

SOC - USB

TP93D2	USB_SOC_N 5 27
TP93D3	USB_SOC_P 5 27

E75

TP93D4	HYDRA_E75_ACC_DET_L 27
TP93D5	PPVBUS_E75_USB_CONN 27 28 36
TP93D6	PPOUT_E75_ACC_ID1_CONN 27 28 47
TP93D7	PPOUT_E75_ACC_ID2_CONN 27 28 47
TP93D8	E75_DPAIR1_N 27 28
TP93D9	E75_DPAIR1_P 27 28
TP93E0	E75_DPAIR2_N 27 28
TP93E1	E75_DPAIR2_P 27 28
TP93EB	PPVBUS_USB_EMI 27 36 47
TP93E2	E75_RVP_G 36
TP93E3	E75_TR_B 27
TP93EC	PPOUT_E75_ACC_ID1_CONN 27 28 47
TP93ED	PPOUT_E75_ACC_ID2_CONN 27 28 47

AUDIO - HEADPHONE

TP93E5	CODEC_HP_HEADSET_DET_CONN 24 46
TP93E6	CODEC_HP_HS3_CONN 24 46
TP93E7	CODEC_HP_HS3_REF_CONN 24 46
TP93E8	CODEC_HP_HS4_CONN 24 46
TP93E9	CODEC_HP_HS4_REF_CONN 24 46
TP93F0	CODEC_HP_LEFT_CONN 24 46
TP93F1	CODEC_HP_RIGHT_CONN 24 46

AUDIO - SPEAKER AMPS

TP93F2	PPVBOOST_R_CN 26
TP93F3	PPVBOOST_L_CN 26
TP93FA	GPIO_SPKRAMP_TO_SOC_IRQ_L 10 26
TP93FB	TDM_SPKRAMP_TO_SPKRAMP_I2C 26

AUDIO - CODEC

TP93F6	GPIO_CODEC_TO_PMU_WAKE_L 24 39
TP93F8	MIKEY_HYDRA_P 24 27
TP93F9	MIKEY_HYDRA_N 24 27

POWER - SENSORS

TP93G0	PP1V8_S2_KOBOL_FILT 17
TP93G2	PP1V8_PHOS_FILT 17

I2C

TP93GG	I2C1_SCL_1V8 4 9
TP93GH	I2C1_SDA_1V8 4 9
TP93GC	I2C2_SCL_1V8 4 9
TP93GD	I2C2_SDA_1V8 4 9
TP93GE	I2C3_SCL_1V8 4 9
TP93GF	I2C3_SDA_1V8 4 9
TP93HE	I2C4_SCL_1V8 4 9
TP93HF	I2C4_SDA_1V8 4 9

WIFI/BT

TP93I0	GPIO_PMU_TO_BT_REG_ON 39 45
TP93I1	GPIO_PMU_TO_WLAN_REG_ON 39 45
TP93I2	CLK_PMU_TO_WLAN_32K 39 45
TP93IB	GPIO_WLAN_TO_SOC_TIME_SYNC 10 45
TP93IC	JTAG_WLAN_SEL 33
TP93IE	GPIO_AOP_TO_WLAN_CONTEXT_A 11 45
TP93IF	GPIO_AOP_TO_WLAN_CONTEXT_B 11 45

CAMERA - NH

TP93I3	CLK_SOC_TO_FRONT_CAM_12MHZ 7 23
TP93I4	ISP_I2C2_SCL_1V8 4 23
TP93I5	ISP_I2C2_SDA_1V8 4 23
TP93I6	GPIO_SOC_TO_FRONT_CAM_SHTDWN_L 7 23

CAMERA - ARIZONA

TP93J3	GPIO_SOC_TO_MINION_CRESET_L 7 21
TP93J4	MINION_SPI_MOSI 21
TP93J2	MINION_SPI_MISO 21
TP93JA	MINION_SPI_SCLK 21
TP93JD	MINION_SPI_CS_L 21
TP93JE	GPIO_FLASH_WP_L 21
TP93JF	GPIO_FLASH_HOLD_L 21
TP93JG	GPIO_MINION_TO_SOC_CONFIG_DONE 7 21 48

MESA

TP93J1	GPIO_MESA_TO_SOC_IRQ 9 31
TP93JC	PP16V0_MESA 31
TP93JD	GPIO_MESA_TO_BOOST_ENABLE 31

ALS

TP93J7	GPIO_ALS_C4_TO_SOC_IRQ_L 10 36
TP93J8	GPIO_ALS_C3_TO_SOC_IRQ_L 10 36

DISPLAY

TP93J9	LPDP_TCON_TO_SOC_HPD 8 30
TP93K0	GPIO_PMU_TO_LCD_PWREN 29 30 39

AOP

TP93K1	CLK_PMU_TO_AOP_32K 11 39

AUDIO - DIGITAL MICS

TP93K2	DMIC1_MIC_SCLK_CONN 25
TP93K3	DMIC1_MIC_SD_CONN 25

AUDIO- BELFIELD

TP93R0	GPIO_BELFIELD_TO_PMU_WAKE_L 24 39
TP93R1	GPIO_BELFIELD_TO_SOC_IRQ_L 9 24

TOUCH

TP93N1	PP15V0_TOUCH_FILT 18 19
TP93N2	PP2V8_KONA_M_VDDANA 18
TP93N4	KONA_BOOST_VBAT 18
TP93N5	KONA_BOOST_EN 18

SOC - ACC UART

TP93N8	UART_SOC_TO_ACC_TX 10 27
TP93N9	UART_ACC_TO_SOC_TX 10 27

SOC - GND

TP93NA	SOC_SENSE_NEG 13 48
TP93NB	CPU_PCORE_SENSE_NEG 13 48
TP93NF	VDDQL_DCS_SENSE_NEG 13

SOC - POWER

TP93NC	ADC_SOC_TO_PMU_VDD_CPU 13 37 39 48
TP93ND	ADC_SOC_TO_PMU_VDD_GPU 13 37 39 48
TP93NE	ADC_SOC_TO_PMU_VDD_SOC 13 39 48

PLACE VSS SENSE TEST POINTS NEAR BY

SMC I2C

TP93GK	I2C_SMC_I2CM0_SCL_1V8 4 9
TP93GL	I2C_SMC_I2CM0_SDA_1V8 4 9
TP93GM	I2C_SMC_I2CM1_SCL_1V8 4 9
TP93GN	I2C_SMC_I2CM1_SDA_1V8 4 9

USB

TP93HC	PLACE_NEAR=U3512.5:1MM	USB_KIS_P 5 27
TP93HD	PLACE_NEAR=U3512.4:1MM	USB_KIS_N 5 27

TP93GO, TP93GP, TP93GQ, TP93GR, TP93GS, TP93GT, TP93GU, TP93GV

SYNC_MASTER=J211_MLB_8 SYNC_DATE=07/05/2018

PAGE TITLE

TEST: TPS/HOLES/FIDUCUALS

EE CHARACTERIZATION PP/TP

SOC

PP9504 P3MM SM (PP) 1 ADC_SOC_TO_PMU_ANALOGMUX_OUT 5 39

PP950C P3MM SM (PP) 1 VDDQL_SENSE_POS 13

PP9505 P3MM SM (PP) 1 ADC_SOC_TO_PMU_VDD_SOC 13 39 47
PP9506 P3MM SM (PP) 1 SOC_SENSE_NEG 13 47

PP9507 P3MM SM (PP) 1 ADC_SOC_TO_PMU_VDD_GPU 13 37 39 47
PP9508 P3MM SM (PP) 1 GPU_SENSE_NEG 13

PP9509 P3MM SM (PP) 1 DCS_SENSE_POS 13

PP950A P3MM SM (PP) 1 ADC_SOC_TO_PMU_VDD_CPU 13 37 39 47
PP950B P3MM SM (PP) 1 CPU_PCORE_SENSE_NEG 13 47

PP950E P3MM SM (PP) 1 PP_SOC_DEBUG2 7
PP950F P3MM SM (PP) 1 PP_SOC_DEBUG3 7

PP950G P2MM SM (PP) 1 PP_SOC_AON_SLEEP1_RESET_L 11

HYDRA

PUT BACK PLACE_SIDE:TOP FOR CHINA BUILD

PP9503 P2MM SM (PP) 1 TP_HYDRA_EXT_SW_EN 27

CODEC I2S

PP9510 P2MM SM (PP) 1 I2S_AOP_TO_CODEC_BCLK 11 24
PP9511 P2MM SM 1 I2S_AOP_TO_CODEC_LRCK 11 24
PP9512 P2MM SM (PP) 1 I2S_AOP_TO_CODEC_DOUT 11 24
PP9513 P2MM SM (PP) 1 I2S_CODEC_TO_AOP_DOUT 11 24

BELFIELD I2S

PP9514 P2MM SM (PP) 1 I2S0_SOC_TO_BELFIELD_BCLK 9 24
PP9515 P2MM SM (PP) 1 I2S0_SOC_TO_BELFIELD_LRCK 9 24
PP9516 P2MM SM 1 I2S0_SOC_TO_BELFIELD_DOUT 9 24
PP9517 P2MM SM (PP) 1 I2S0_BELFIELD_TO_SOC_DOUT 9 24
PP9518 P2MM SM (PP) 1 I2S0_SOC_TO_BELFIELD_MCLK 9 24

CN SPEAKER I2S

PP9525 P2MM SM (PP) 1 I2S1_SOC_TO_SPKRAMP_CN_MCLK 9 26
PP9526 P2MM SM (PP) 1 I2S1_SOC_TO_SPKRAMP_CN_BCLK 9 26
PP9527 P2MM SM (PP) 1 I2S1_SOC_TO_SPKRAMP_CN_LRCK 9 26
PP9528 P2MM SM (PP) 1 I2S1_SOC_TO_SPKRAMP_CN_DOUT 9 26
PP9529 P2MM SM (PP) 1 I2S1_SPKRAMP_CN_TO_SOC_DOUT 9 26

POTOMAC

PP9539 P2MM SM (PP) 1 SYS_ALIVE 16 39

AUDIO

PP953A P2MM SM (PP) 1 GPIO_CODEC_TO_SOC_IRQ_L 9 24

BELFIELD SPI LINES

P3MM

PP9540 SM (PP) 1 SPI_BELFIELD_CS_L 9 24

PP9542 P3MM SM (PP) 1 SPI_BELFIELD_MOSI 9 24
PP9543 P3MM SM (PP) 1 SPI_BELFIELD_MISO 9 24

SENSOR SPI LINES

PP9544 P3MM SM (PP) 1 SPI_SENSORS_SCLK PLACE_NEAR=U2150.2:10MM 11 17 25 48
PP9545 P3MM SM (PP) 1 SPI_SENSORS_MISO PLACE_NEAR=U2150.3:10MM 11 17 25 48
PP9546 P3MM SM (PP) 1 SPI_SENSORS_MOSI PLACE_NEAR=U2150.3:10MM 11 17 25 48
PP9547 P3MM SM (PP) 1 SPI_SENSORS_SCLK PLACE_NEAR=U2120.4:10MM 11 17 25 48
PP9548 P3MM SM (PP) 1 SPI_SENSORS_SCLK PLACE_NEAR=U2140.A3:10MM 11 17 25 48
PP9549 P3MM SM (PP) 1 SPI_SENSORS_MOSI PLACE_NEAR=U2120.3:10MM 11 17 25 48
PP954A P3MM SM (PP) 1 SPI_SENSORS_MOSI PLACE_NEAR=U2140.A4:10MM 11 17 25 48

MESA SPI LINES

P3MM

PP954B SM (PP) 1 SPI_MESA_MISO 9 31
PP954C P3MM SM (PP) 1 SPI_MESA_MOSI_CONN 29 31
PP954D P3MM SM (PP) 1 SPI_MESA_SCLK_CONN 29 31

CAMERA - FRONT

PP9560 P2MM SM (PP) 1 MIPI_NH_CAM_TO_SOC_CLK_P 7 23
NO_XNET_CONNECTION=1
PP9561 P2MM SM (PP) 1 MIPI_NH_CAM_TO_SOC_CLK_N 7 23
NO_XNET_CONNECTION=1
PP9562 MIPI_NH_CAM_TO_SOC_DATA_P<0> 7 23
NO_XNET_CONNECTION=1
PP9563 P2MM SM (PP) 1 MIPI_NH_CAM_TO_SOC_DATA_N<0> 7 23
NO_XNET_CONNECTION=1
PP9564 P2MM SM (PP) 1 MIPI_NH_CAM_TO_SOC_DATA_P<1> 7 23
NO_XNET_CONNECTION=1
PP9565 P2MM SM (PP) 1 MIPI_NH_CAM_TO_SOC_DATA_N<1> 7 23
NO_XNET_CONNECTION=1

CAMERA - REAR & MINION

PP9566 P2MM SM (PP) 1 MIPI_MINION_TO_SOC_CLK_P 7 21
NO_XNET_CONNECTION=1
PP9567 P2MM SM 1 MIPI_MINION_TO_SOC_CLK_N 7 21
NO_XNET_CONNECTION=1
PP9568 P2MM SM (PP) MIPI_MINION_TO_SOC_DATA_P<0> 7 21
NO_XNET_CONNECTION=1
PP9569 P2MM SM (PP) 1 MIPI_MINION_TO_SOC_DATA_N<0> 7 21
NO_XNET_CONNECTION=1
PP956G P2MM SM (PP) 1 MIPI_MINION_TO_SOC_DATA_P<1> 7 21
NO_XNET_CONNECTION=1
PP956H P2MM SM (PP) 1 MIPI_MINION_TO_SOC_DATA_N<1> 7 21
NO_XNET_CONNECTION=1

PP956A P2MM SM (PP) 1 MIPI_CAM_REAR_TO_MINION_CLK_P 21 46
NO_XNET_CONNECTION=1
PP956B SM (PP) 1 MIPI_CAM_REAR_TO_MINION_CLK_N 21 46
NO_XNET_CONNECTION=1
PP956C P2MM SM (PP) 1 MIPI_CAM_REAR_TO_MINION_DATA_P<0> 21 46
NO_XNET_CONNECTION=1
PP956D P2MM SM (PP) 1 MIPI_CAM_REAR_TO_MINION_DATA_N<0> 21 46
NO_XNET_CONNECTION=1

PP956E P2MM SM (PP) 1 GPIO_MINION_TO_SOC_CONFIG_DONE 7 21 47
NO_XNET_CONNECTION=1
PP956F P2MM SM (PP) 1 CLK_SOC_TO_MINION_12MHZ 7 21
NO_XNET_CONNECTION=1

GRAPE

PP9580 P3MM SM (PP) 1 SPI_SOC_TO_GRAPE_SCLK 9 18
PP9581 P3MM SM (PP) 1 SPI_SOC_TO_GRAPE_MISO 9 18
PP9582 P3MM SM (PP) 1 SPI_SOC_TO_GRAPE_MOSI 9 18
PP9583 P3MM SM (PP) 1 SPI_SOC_TO_GRAPE_CS_L 9 18
PP9584 P3MM SM (PP) 1 GPIO_SOC_TO_GRAPE_RESET_L 10 18 19
PP9585 P3MM SM (PP) 1 GPIO_GRAPE_TO_SOC_IRQ_L 10 18

PP958C P3MM SM (PP) 1 KONA_BOOST_ATEST 18

PP958L P3MM SM (PP) 1 TP_KONA_GPIO_ADC_03 18
PP958M P3MM SM (PP) 1 CLK_KONA_M_24MHZ 18
PP958N P3MM SM (PP) 1 GPIO_SOC_TO_GRAPE_BSYNC0 18 19 29
PP958P P3MM SM (PP) 1 GPIO_SOC_TO_GRAPE_BSYNC1 18 19 29

GRAPE POWER

PP958R P3MM SM (PP) 1 PP3V3_GRAPE_FILT 19 18
PP958S P3MM SM (PP) PP1V8_GRAPE_XTAL_FILT 18 19
PP958T P3MM SM (PP) 1 KONA_M_VDDCORE_CAP 18

PP958V P3MM SM (PP) 1 PP1V8_GRAPE_AON_RC 18 19

NAND PCIE TPS

PP95D4 P2MM SM (PP) 1 PLACE_NEAR=U1700.K11:3MM PCIE_SOC_TO_NAND1_REFCLK_P 6 16
PP95D5 P2MM SM (PP) 1 PLACE_NEAR=U1700.112:3MM PCIE_SOC_TO_NAND1_REFCLK_N 6 16
PP95D6 P2MM SM (PP) 1 PLACE_NEAR=U1700.F8:20MM PCIE_SOC_TO_NAND1_RESET_L
PP95D7 P2MM SM (PP) 1 PLACE_NEAR=U1700.14:20MM NAND1_ANI1_VREF 16
PP95D8 P2MM SM (PP) 1 PLACE_NEAR=U1700.G12:20MM NAND1_ANI0_VREF 16

PP95DI P2MM SM (PP) 1 PLACE_NEAR=U1800.C4:20MM GPIO_SOC_TO_NAND_FW_STRAP 5 16
PP95DJ P2MM SM (PP) 1 PLACE_NEAR=U1800.L4:20MM GPIO_SOC_TO_NAND_RESET_L 5 16

PMU/POTOMAC

PP95G1 P2MM SM (PP) 1 GPIO_PMU_TO_SOC_IRQ_L 11 39
PP95G2 P2MM SM (PP) 1 GPIO_POTOMAC_TO_PMU_WAKE 39 40
PP95G3 P2MM SM (PP) 1 GPIO_POTOMAC_TO_SMC_TO_PMU_IRQ_L 9 39 40
PP95G4 P2MM SM (PP) 1 ORION_TO_POTOMAC_OVP_SW_EN_L 36 40
PP95G5 P2MM SM 1 GPIO_PMU_TO_POTOMAC_LINCH_EN 39 40
PP95G6 P2MM SM (PP) 1 ATLAS_FAULT_OUT_L 39
PP95G7 P2MM SM (PP) 1 USB_VBUS_DETECT 5 40

WIFI

PP95BL P2MM SM (PP) 1 GPIO_SOC_TO_BT_TO_GRAPE_TS_SYNC 10 18 19 32 33 45
PP95BM P2MM SM (PP) 1 GPIO_TOUCH_TO_BT_SYNC 18 32 33 45

WLAN PCIE TPS

PP95E0 P2MM SM (PP) 1 PLACE_NEAR=U0600.BE11:3MM PCIE_WLAN_TO_SOC_TX_P 6 45
PP95E1 P2MM SM (PP) 1 PLACE_NEAR=U0600.BE11:3MM PCIE_WLAN_TO_SOC_TX_N 6 45
PP95E2 P2MM SM (PP) 1 PLACE_NEAR=U0600.BF39:4MM PCIE_WLAN_TO_SOC_CLKREQ_L 6 45

PP95E7 P2MM SM (PP) PLACE_NEAR=U4900.67:3MM PCIE_SOC_TO_WLAN_RESET_L 6 45

SYNC_MASTER=J211_MLB_8 SYNC_DATE=07/05/2018
PAGE TITLE
TEST: EE TP/PP

POWER CONNECTIONS

BUCK0 (ACTIVE)

47 37 PPVDD_CPU (MAKE_BASE=TRUE) — PPVDD_CPU 12 15 37

BUCK1 (SW CONTROL)

47 37 PPVDD_GPU (MAKE_BASE=TRUE) — PPVDD_GPU 12 15 37

BUCK2 (SLEEP1)

47 37 PPVDD_S1_SOC (MAKE_BASE=TRUE) — PPVDD_S1_SOC 12 15 36

BUCK3 (SLEEP2)

47 37 36 5 PP1V8_S2 (MAKE_BASE=TRUE)
- PP1V8_S2 13
- PP1V8_S2 27
- PP1V8_S2 22 25 39
- PP1V8_S2 41
- PP1V8_S2 38
- PP1V8_S2 38
- PP1V8_S2 11 13 36
- PP1V8_S2 9 30 39 43 44
- PP1V8_S2 11 42

BUCK3 INTERNAL SWITCHES

BUCK3_SW1 (ACTIVE)

47 38 PP1V8_SW1 (MAKE_BASE=TRUE)
- PP1V8_SW1 26
- PP1V8_SW1 40 44

BUCK3_SW2 (SW CONTROL)

38 36 PP1V8_GRAPE (MAKE_BASE=TRUE) — PP1V8_GRAPE 11 18 19

BUCK3_SW3 (SLEEP2)

38 PP1V8_S2_SENSOR (MAKE_BASE=TRUE)
- PP1V8_S2_SENSOR 17
- PP1V8_S2_SENSOR 17
- PP1V8_S2_SENSOR 25

BUCK3 EXTERNAL SWITCHES

BUCK3_EXT_SW1 (ACTIVE)

47 41 PP1V8_EXT_SW1 (MAKE_BASE=TRUE)
- PP1V8_EXT_SW1 13
- PP1V8_EXT_SW1 5
- PP1V8_EXT_SW1 7
- PP1V8_EXT_SW1 5 46
- PP1V8_EXT_SW1 11 16 36
- PP1V8_EXT_SW1 9
- PP1V8_EXT_SW1 4 5 6 9 36 39 46
- PP1V8_EXT_SW1 13
- PP1V8_EXT_SW1 38

BUCK3_S2_EXT_SW2 (SLEEP2)

47 46 41 PP1V8_S2_EXT_SW2 (MAKE_BASE=TRUE)
- PP1V8_S2_EXT_SW2 45
- PP1V8_S2_EXT_SW2 45
- PP1V8_S2_EXT_SW2 24
- PP1V8_S2_EXT_SW2 25

BUCK4 (SLEEP2)

47 37 PP1V1_S2 (MAKE_BASE=TRUE)
- PP1V1_S2 38
- PP1V1_S2 13 36

BUCK5 (SLEEP1)

47 37 PPVDD_S1_FIXED (MAKE_BASE=TRUE)
- PPVDD_S1_FIXED 13 36
- PPVDD_S1_FIXED 6 12 36
- PPVDD_S1_FIXED 7 36
- PPVDD_S1_FIXED 12 15
- PPVDD_S1_FIXED 5
- PPVDD_S1_FIXED 8 36
- PPVDD_S1_FIXED 12
- PPVDD_S1_FIXED 12
- PPVDD_S1_FIXED 12

BUCK6 (ACTIVE)

47 37 PP2V63_NAND (MAKE_BASE=TRUE) — PP2V63_NAND 16 36

BUCK7 (ACTIVE)

37 PPVDD_CPU_SRAM (MAKE_BASE=TRUE) — PPVDD_CPU_SRAM 12 15

BUCK8 (SW CONTROL)

47 37 PPVDD_GPU_SRAM (MAKE_BASE=TRUE) — PPVDD_GPU_SRAM 12 15

BUCK9 (SLEEP1)

37 PPVDD_S1_DCS (MAKE_BASE=TRUE) — PPVDD_S1_DCS 13

BUCK10 (SLEEP1)

47 37 PPVDD_S1_QL (MAKE_BASE=TRUE) — PPVDD_S1_QL 13 15 46

BUCK11 (ACTIVE)

37 PPVDD_ECPU (MAKE_BASE=TRUE) — PPVDD_ECPU 12 15

LDO1 (SLEEP2)

38 PP3V0_S2_HYDRA (MAKE_BASE=TRUE)
- PP3V0_S2_HYDRA 27
- PP3V0_S2_HYDRA 42

LDO2 (S2 - LDO MODE)

47 38 PP1V7_S2_VA_VCP (MAKE_BASE=TRUE) — PP1V7_S2_VA_VCP 24 38

LDO3 (SW CONTROL)

47 38 7 PP1V8_CAM (MAKE_BASE=TRUE)
- PP1V8_CAM 23
- PP1V8_CAM 21 22

LDO4 (SW CONTROL)

38 PP3V0_ALS (MAKE_BASE=TRUE)
- PP3V0_ALS 22
- PP3V0_ALS 25

LDO5 (ACTIVE)

38 36 PP3V3_GRAPE (MAKE_BASE=TRUE) — PP3V3_GRAPE 18

LDO6 (SW CONTROL)

47 38 PP3V3_ACC (MAKE_BASE=TRUE) — PP3V3_ACC 27

LDO7 (ACTIVE)

47 38 PP3V3_USB (MAKE_BASE=TRUE) — PP3V3_USB 5 46

LDO8 (SLEEP2)

47 38 PP3V05_S2_MESA (MAKE_BASE=TRUE) — PP3V05_S2_MESA 31

LDO9 (SPARE)

38 PP1V19_SPARE_LDO9 (MAKE_BASE=TRUE)

LDO10 (ACTIVE)

47 38 PP0V9_NAND (MAKE_BASE=TRUE) — PP0V9_NAND 16 36

LDO11 (SW CONTROL)

47 38 PP2V9_REAR_CAM (MAKE_BASE=TRUE) — PP2V9_REAR_CAM 22

LDO13 (SW CONTROL)

38 PP2V9_FRONT_CAM_AVDD (MAKE_BASE=TRUE) — PP2V9_FRONT_CAM_AVDD 23 47

LDO14 (ACTIVE)

47 38 PP1V2_SOC (MAKE_BASE=TRUE)
- PP1V2_SOC 8
- PP1V2_SOC 12 13
- PP1V2_SOC 6

LDO15 (SLEEP2)

47 38 PP0V75_S2_AOP (MAKE_BASE=TRUE) — PP0V75_S2_AOP 12

LDO16 (SLEEP2)

47 38 PP1V8_S2_MESA (MAKE_BASE=TRUE) — PP1V8_S2_MESA 31

LDO17 (SW CONTROL)

47 38 PP1V19_FRONT_CAM (MAKE_BASE=TRUE) — PP1V19_FRONT_CAM 23

LDO18 (SW CONTROL)

38 36 PP1V25_REAR_CAM (MAKE_BASE=TRUE) — PP1V25_REAR_CAM 21 22

LDO19 (SW CONTROL)

47 PP2V6_REAR_CAM_AF (MAKE_BASE=TRUE) — PP2V6_REAR_CAM_AF 21 22

CHARGER MAIN

47 46 40 36 PPVCC_MAIN (MAKE_BASE=TRUE)
- PPVCC_MAIN 37
- PPVCC_MAIN 37
- PPVCC_MAIN 37
- PPVCC_MAIN 37
- PPVCC_MAIN 24
- PPVCC_MAIN 30
- PPVCC_MAIN 36 38
- PPVCC_MAIN 31
- PPVCC_MAIN 45
- PPVCC_MAIN 38
- PPVCC_MAIN 37 41
- PPVCC_MAIN 18
- PPVCC_MAIN 26

CHARGER HIGH

47 40 PPVCC_HIGH (MAKE_BASE=TRUE)
- PPVCC_HIGH 38
- PPVCC_HIGH 31

BATTERY

40 36 PPBATT_VCC (MAKE_BASE=TRUE) — PPBATT_VCC 43

USB POWER INPUT

47 PPVBUS_PROT (MAKE_BASE=TRUE) — PPVBUS_PROT 36 40

PMU_ON_BUF

47 39 PP1V8_ALWAYS (MAKE_BASE=TRUE) — PP1V8_ALWAYS 39 40

BACKLIGHT BOOST

47 39 38 36 PPLED_OUT (MAKE_BASE=TRUE) — PPLED_OUT 30

SYNC_MASTER=J211_ML8_B SYNC_DATE=07/05/2018

PAGE TITLE

POWER: ALIASES

ICE18.8 RADIO

ANTENNA BLOCK DIAGRAM

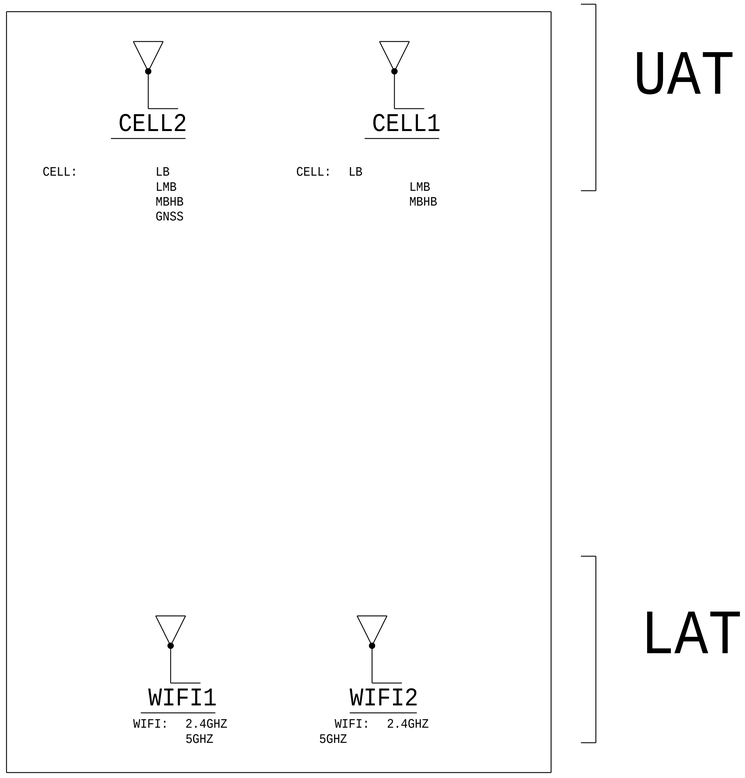

SYNC_MASTER=RADIO_MLB_0.11.0 SYNC_DATE=10/01/2018

PAGE TITLE

ANTENNA DIAGRAM

BOM TABLES

FERRITE ALTERNATES

PART NUMBER	ALTERNATE FOR PART NUMBER	BOM OPTION	REF DES	COMMENTS:
155S00131	155S00341	BOM_TABLE_ALTS	FL900_K	FERR BD, 240OHM
155S00414	155S0876	BOM_TABLE_ALTS	ALL	FERR BD, 100HM
155S00200	155S00400	BOM_TABLE_ALTS	ALL	FERR BD, 150OHM
155S00500	155S00400	BOM_TABLE_ALTS	ALL	FERR BD, 150OHM

ETIC CAP ALTERNATES

PART NUMBER	ALTERNATE FOR PART NUMBER	BOM OPTION	REF DES	COMMENTS:
138S00237	138S00167	BOM_TABLE_ALTS	C1204_K	CAP,2.2UF
138S00397	138S00167	BOM_TABLE_ALTS	C1205_K	CAP,2.2UF
138S00250	138S00167	BOM_TABLE_ALTS	C1206_K	CAP,2.2UF

CAP ALTERNATES

PART NUMBER	ALTERNATE FOR PART NUMBER	BOM OPTION	REF DES	COMMENTS:
138S00086	138S0884	BOM_TABLE_ALTS	ALL	CAP,20UF
138S00351	138S00103	BOM_TABLE_ALTS	ALL	CAP,4.7UF
138S00255	138S00133	BOM_TABLE_ALTS	ALL	CAP,0.47UF

EEPROM ALTERNATES

PART NUMBER	ALTERNATE FOR PART NUMBER	BOM OPTION	REF DES	COMMENTS:
335S00013	335S0894	BOM_TABLE_ALTS	EEPROM_K	EEPROM,8KBIT,I2C

XTAL ALTERNATES

PART NUMBER	ALTERNATE FOR PART NUMBER	BOM OPTION	REF DES	COMMENTS:
197S00250	197S00155	BOM_TABLE_ALTS	Y301_K	XTAL,38.4MHZ,TXC
197S00179	197S00155	BOM_TABLE_ALTS	Y301_K	XTAL,38.4MHZ,NDK

ROW SKU

PART#	QTY	DESCRIPTION	REFERENCE DESIGNATOR(S)	BOM OPTION
353S01345	1	IC,LB PAD,B28,SKY78170,DSBGA112	PA_LB_K	ROW
353S01301	1	IC,SKY13765,LB DSM,DSBGA20,B28	DSM_LB_K	ROW
337S00578	1	IC,ST33G1M2STL9ENL0,VINYL,BGA3X4	U_SIM	ROW
138S0831	1	CAP,CER,X5R,2.2UF,20%,6.3V,0201	C10_SIM	ROW
118S0636	1	RES,MF,1/32W,4.7K OHM,1%,01005,SMD	R12_SIM	ROW
117S0161	1	RES,MF,1/32W,0.0 OHM, 0%,01005,SMD	R13_SIM	ROW
117S0158	1	RES,MF,1/32W,100K OHM,5%,01005,SMD	R10_SIM	ROW

NA SKU

PART#	QTY	DESCRIPTION	REFERENCE DESIGNATOR(S)	BOM OPTION
353S01577	1	IC,LB PAD,B71,SKY78203,DSBGA112	PA_LB_K	NA
353S01472	1	IC,SKY13785,LB DSM,DSBGA20,B71	DSM_LB_K	NA
337S00578	1	IC,ST33G1M2STL9ENL0,VINYL,BGA3X4	U_SIM	NA
138S0831	1	CAP,CER,X5R,2.2UF,20%,6.3V,0201	C10_SIM	NA
118S0636	1	RES,MF,1/32W,4.7K OHM,1%,01005,SMD	R12_SIM	NA
117S0161	1	RES,MF,1/32W,0.0 OHM, 0%,01005,SMD	R13_SIM	NA
117S0158	1	RES,MF,1/32W,100K OHM,5%,01005,SMD	R10_SIM	NA

CHINA SKU

PART#	QTY	DESCRIPTION	REFERENCE DESIGNATOR(S)	BOM OPTION
353S01345	1	IC,LB PAD,B28,SKY78170,DSBGA112	PA_LB_K	CHINA
353S01301	1	IC,SKY13765,LB DSM,DSBGA20,B28	DSM_LB_K	CHINA
117S0158	1	RES,MF,1/32W,100K OHM,5%,01005,SMD	R11_SIM	CHINA

HWID

PART#	QTY	DESCRIPTION	REFERENCE DESIGNATOR(S)	BOM OPTION
118S0710	1	RES,1%,22.1K OHM,1/32W,01005	R311_K	ROW
117S0191	1	RES,5%,18.0K OHM,1/32W,01005	R311_K	NA

UPDATED FOR EVT BUILD

SYNC_MASTER=RADIO_MLB_0.11.0 SYNC_DATE=10/01/2018

PAGE TITLE

BOM TABLES

BBPMU: CONTROL

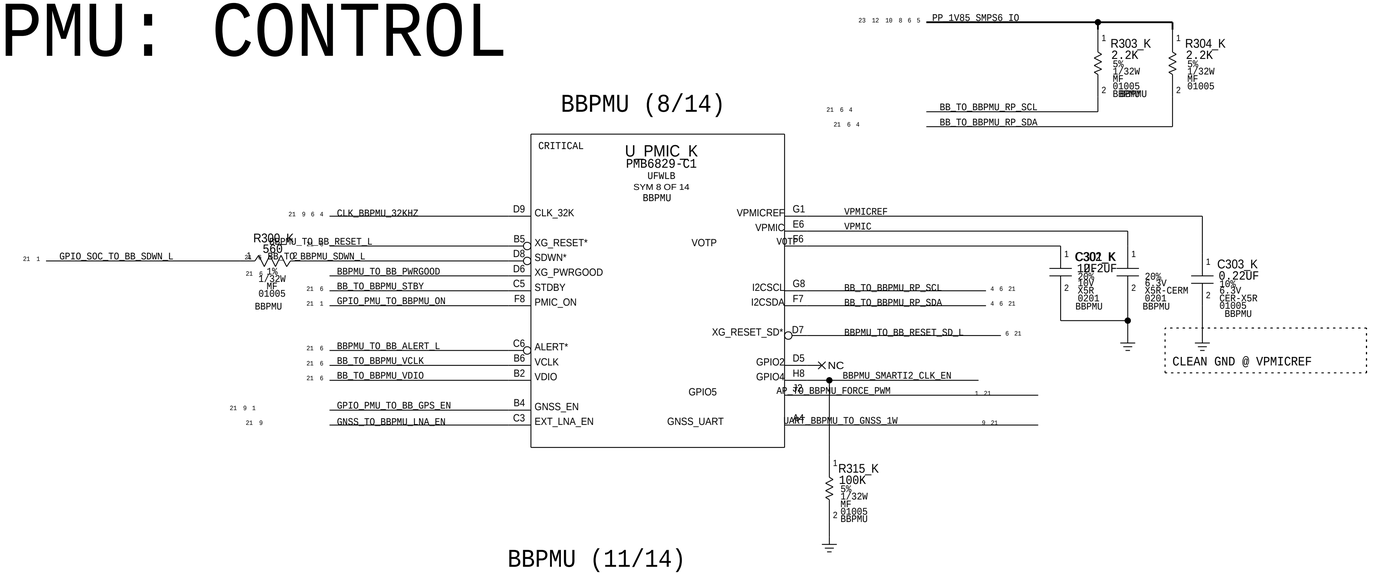

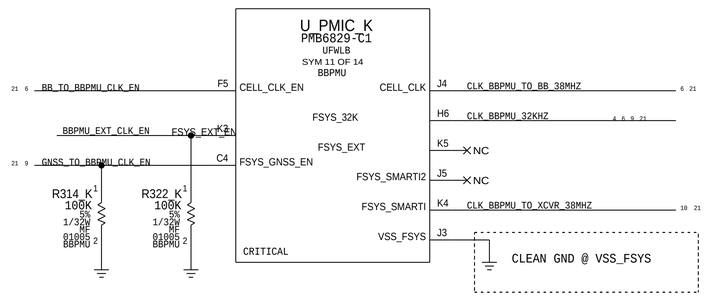

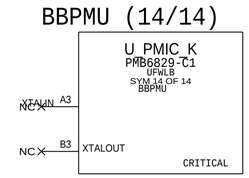

POR: 32K CLK GENERATED INTERNALLY
OPTIONAL PINS FOR EXTERNAL OSC

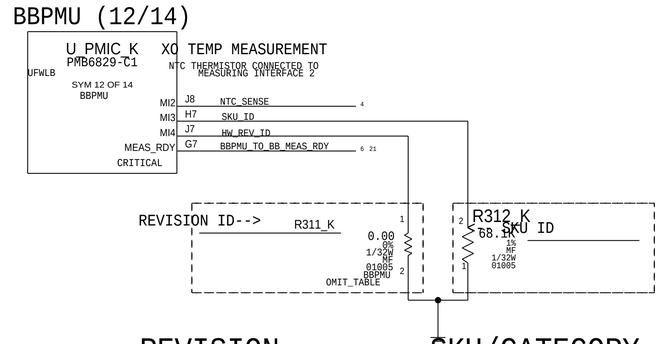

REVISION

R311_K	REVISION MLB
0.0	PROTO 1 - LOCAL - NA
1.2K	PROTO 1 - LOCAL - ROW
2.2K	PROTO 1 - FXLH - NA
3.3K	PROTO 1 - FXLH - ROW
4.7K	PROTO 2 - LOCAL - NA
6.8K	PROTO 2 - LOCAL - ROW
8.2K	PROTO 2 - FXLH - NA
10K	PROTO 2 - FXLH - ROW
12K	EVT - LOCAL - NA
15K	EVT - LOCAL - ROW
18K	EVT - FXLH - NA
22K	EVT - FXLH - ROW
27K	DVT - LOCAL - NA
33K	DVT - LOCAL - ROW
39K	DVT - FXLH - NA
47K	DVT - FXLH - ROW
56K	PVT - FXLH - NA
68K	PVT - FXLH - ROW
82K	DOE1 - NA
100K	DOE1 - ROW
120K	
150K	

SKU/CATEGORY

R312_K	HW REVISION	X-CODE
0.0	RFDEV JP	
1.2K	ICE 18.0 JP	X1344 (ICE 18.0)
2.2K	ICE 18.0 ROW	
3.3K	ICE 18.1 JP	X1049 (ICE 18.1)
4.7K	ICE 18.1 ROW	
6.8K	ICE 18.2 JP	X1210 (ICE 18.2)
8.2K	ICE 18.2 ROW	
10K	RFDEV ROW	
12K	ICE 18.5 JP	X1170
15K	ICE 18.6 JP	X1176
18K	ICE 18.7	X1482
22K	ICE 18.5 US	X1170
27K	ICE 18.6 US	X1176
33K	ICE 18.0 NA	X1344
39K	RFDEV NA	
47K	ICE 18.1 NA	X1049
56K	ICE 18.2 NA	X1210
68K	ICE 18.8	X1485
82K	KAROO INTERNAL	
100K	KAROO INTERNAL	
120K	KAROO INTERNAL	
150K		

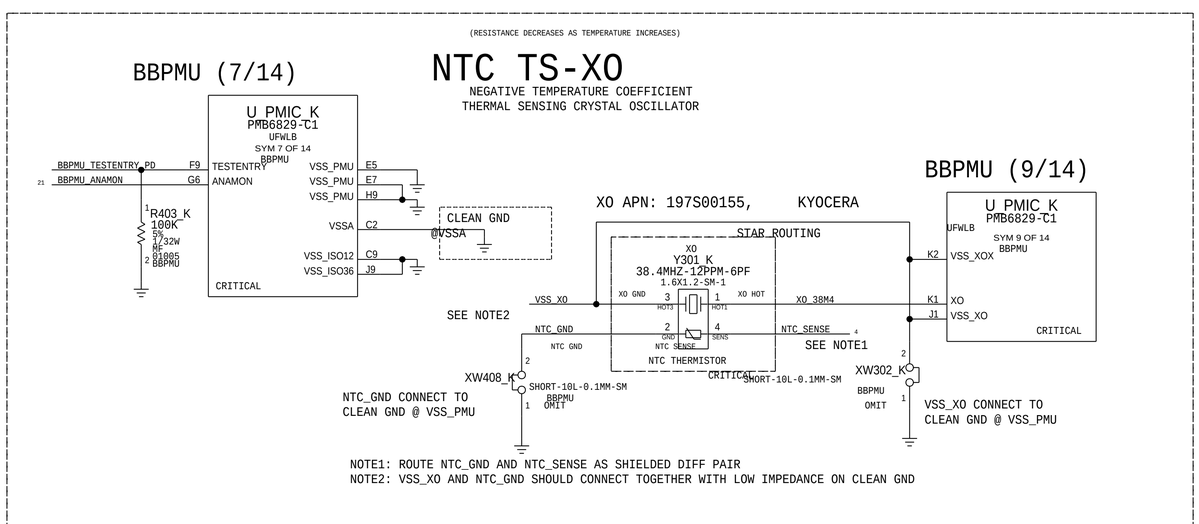

HWID TABLE RDAR://32880011
ADC TABLE RDAR://27081897

BBPMU ADC TABLES

SYNC_MASTER=RADIO_MLB_0.11.0 SYNC_DATE=10/01/2018
PAGE TITLE
BBPMU: CONTROL

BBPMU: RAILS

PROGRAMMABLE LDOS

BBPMU (10/14)

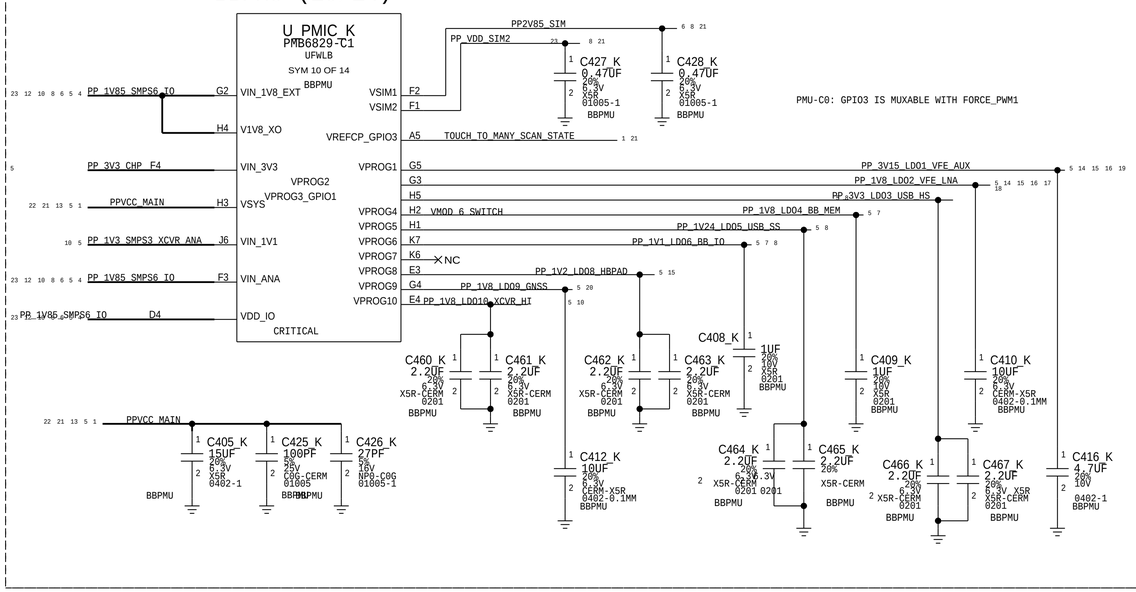

CHARGE PUMP

BBPMU (6/14)

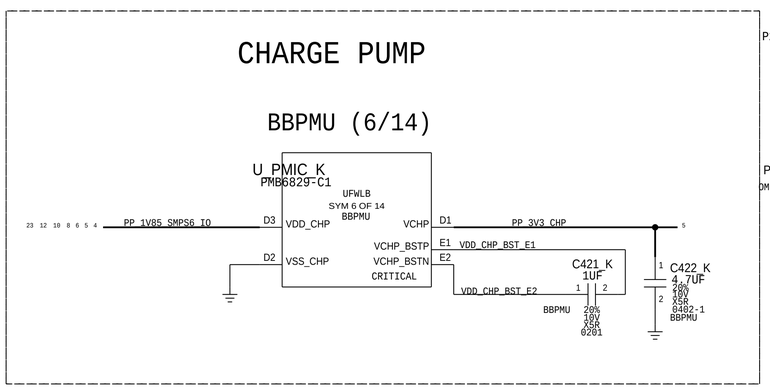

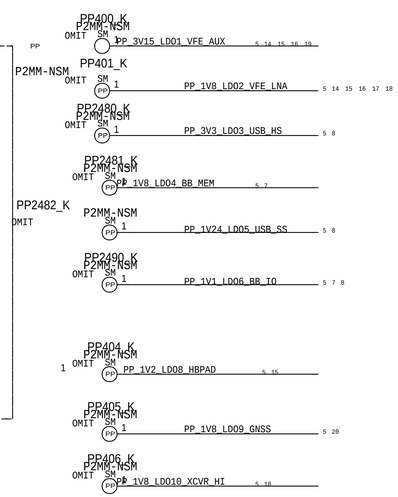

SWITCHERS

SMPS1/2/4 SHARED VDD_MAIN INTERNALLY
SMPS3/5/6 SHARED VDD_MAIN INTERNALLY

BBPMU (1/14) APN:152S00539 Z=0.8MM

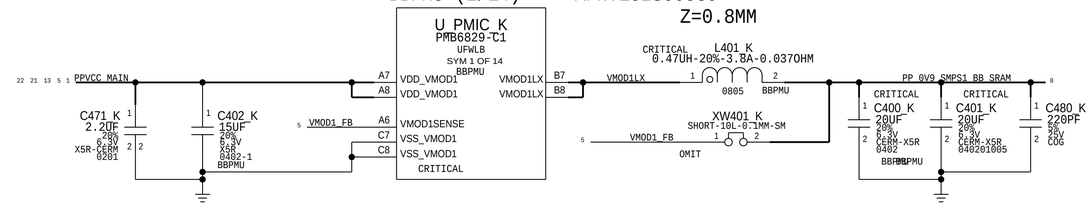

BBPMU (2/14) APN:152S00436 Z=0.8MM

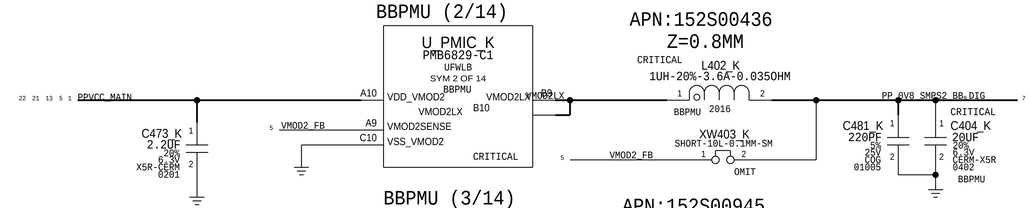

BBPMU (3/14) APN:152S00945 Z=0.7MM

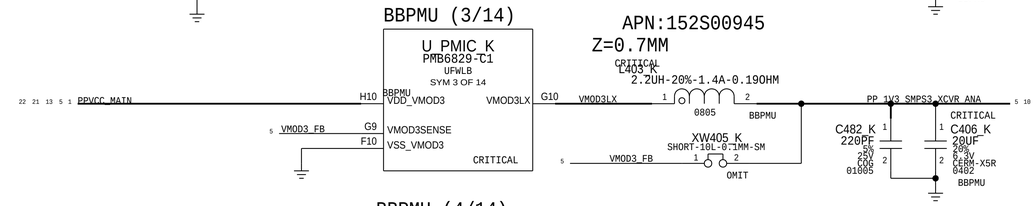

BBPMU (4/14) APN:152S00630 Z=0.65MM

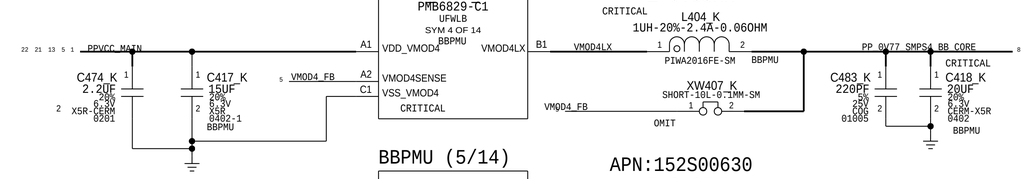

BBPMU (5/14) APN:152S00630 Z=0.65MM

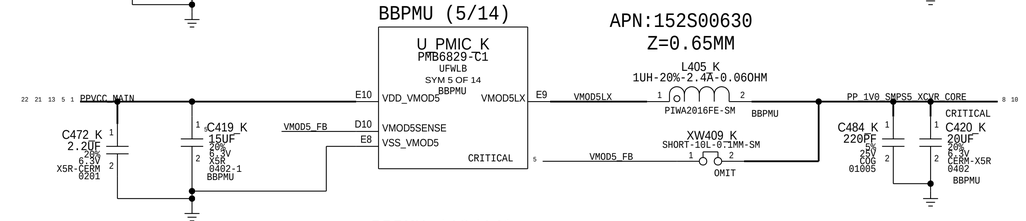

BBPMU (13/14) APN:152S00630 Z=0.65MM

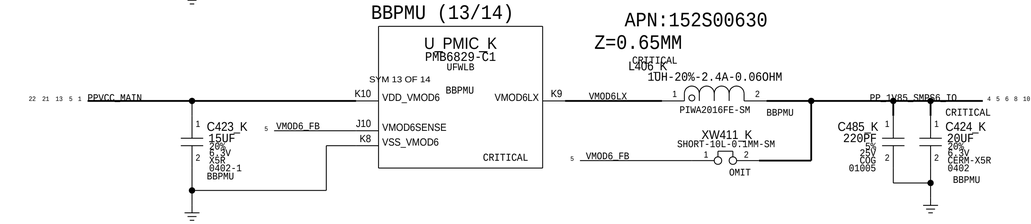

SYNC_MASTER=RADIO_MLB_0.11.0 SYNC_DATE=10/01/2018

PAGE TITLE

BBPMU: RAILS

BB: INTERFACE

XG756 (5/7)

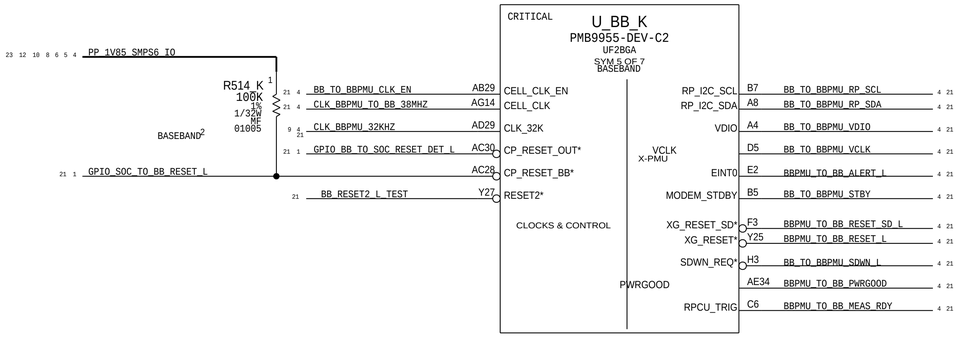

XG756 (7/7)

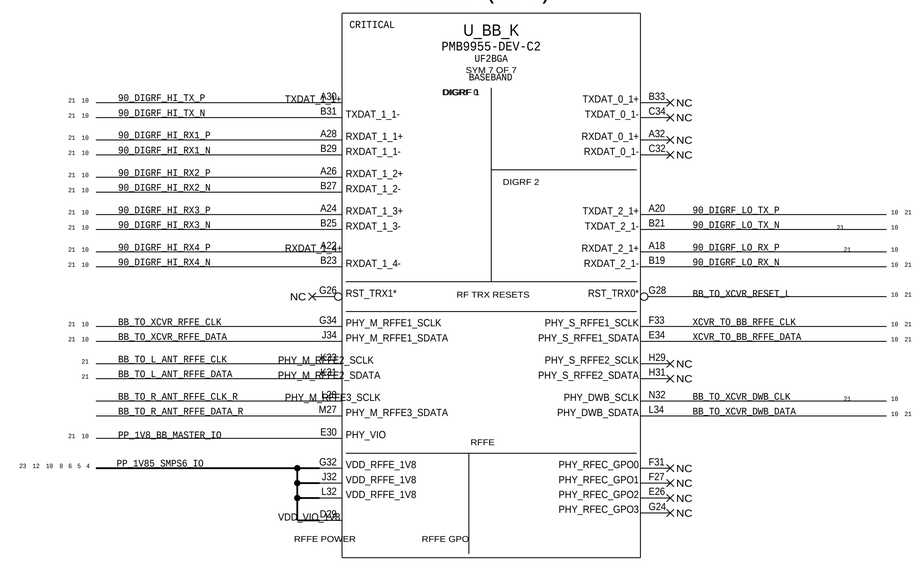

XG756 (1/7)

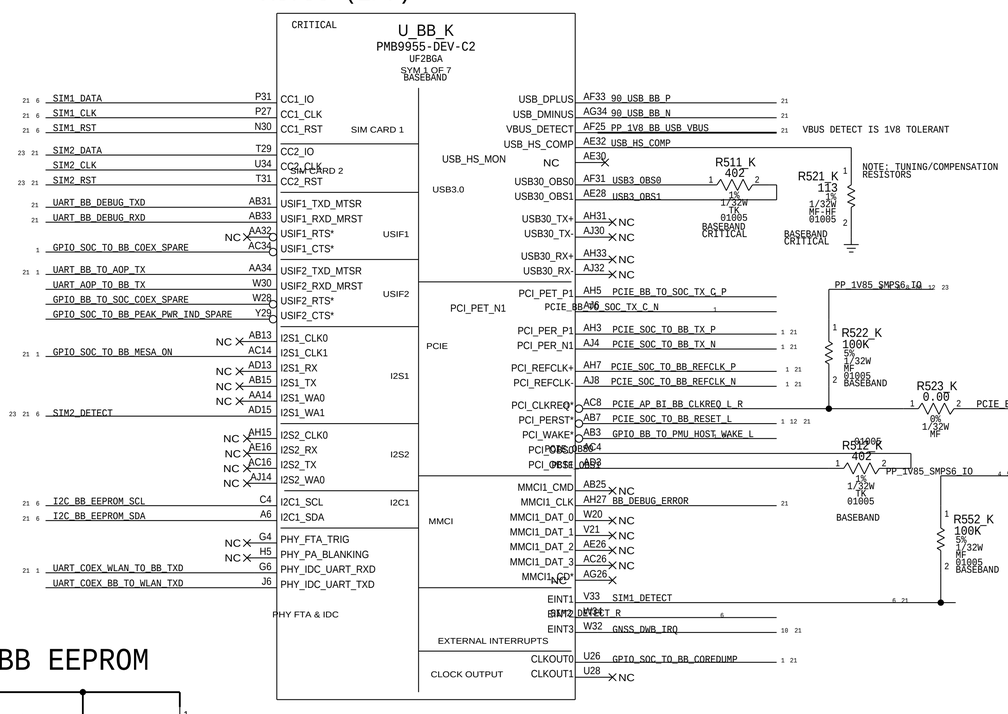

SIM RESISTORS

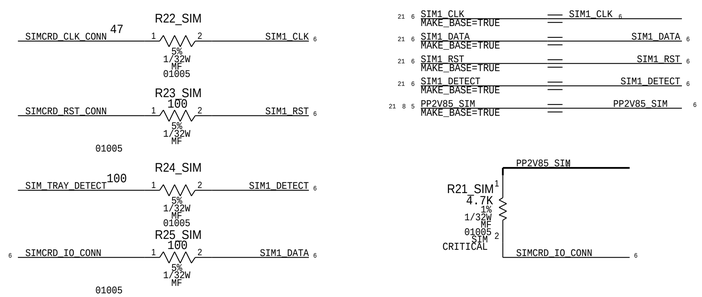

BB EEPROM

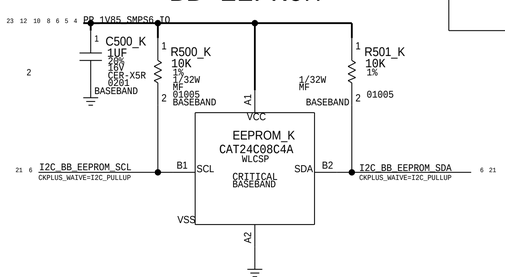

SIM2_DETECT TO EINT2

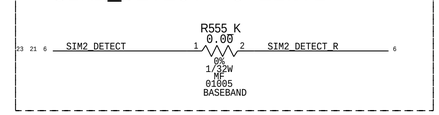

SYNC_MASTER=RADIO_MLB_0.11.0 SYNC_DATE=10/01/2018

PAGE TITLE

BB: INTERFACE

BB: DDR PWR & JTAG

HOOKS FOR DDR4 TESTING/CAL

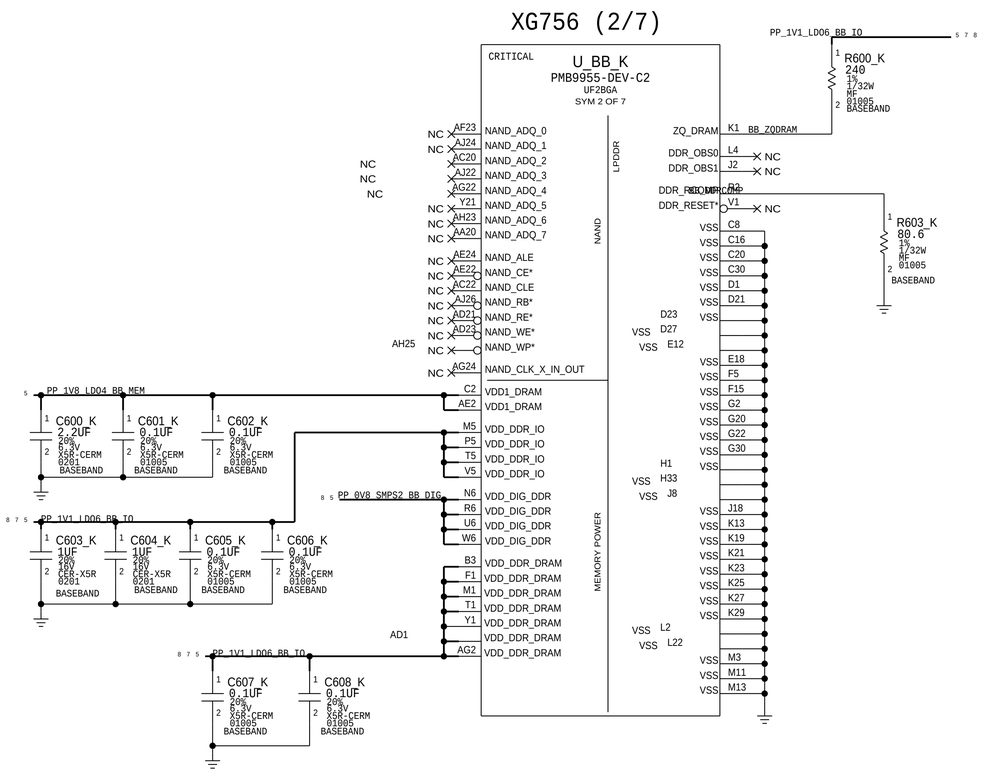

SWD, SEE PAGE 14

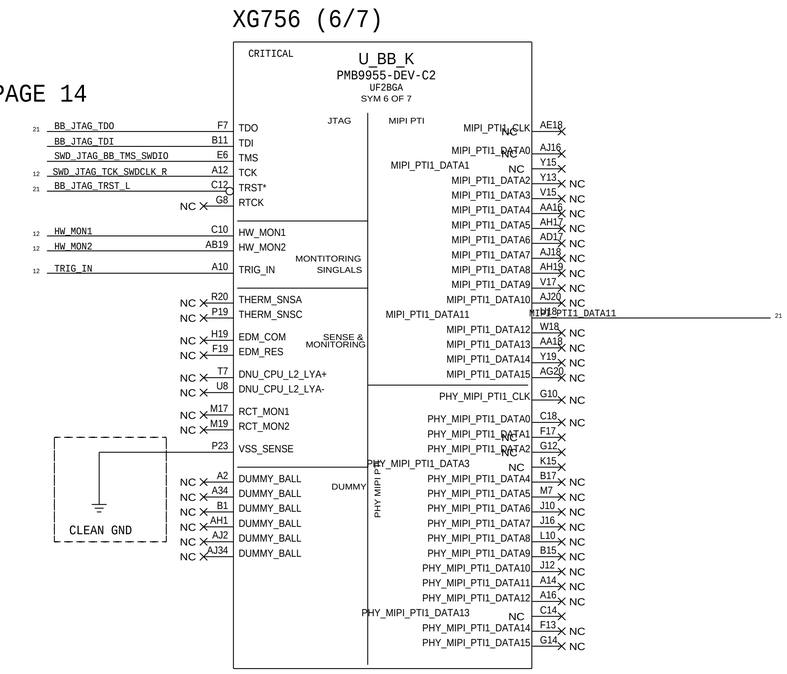

BB: DIGITAL PWR

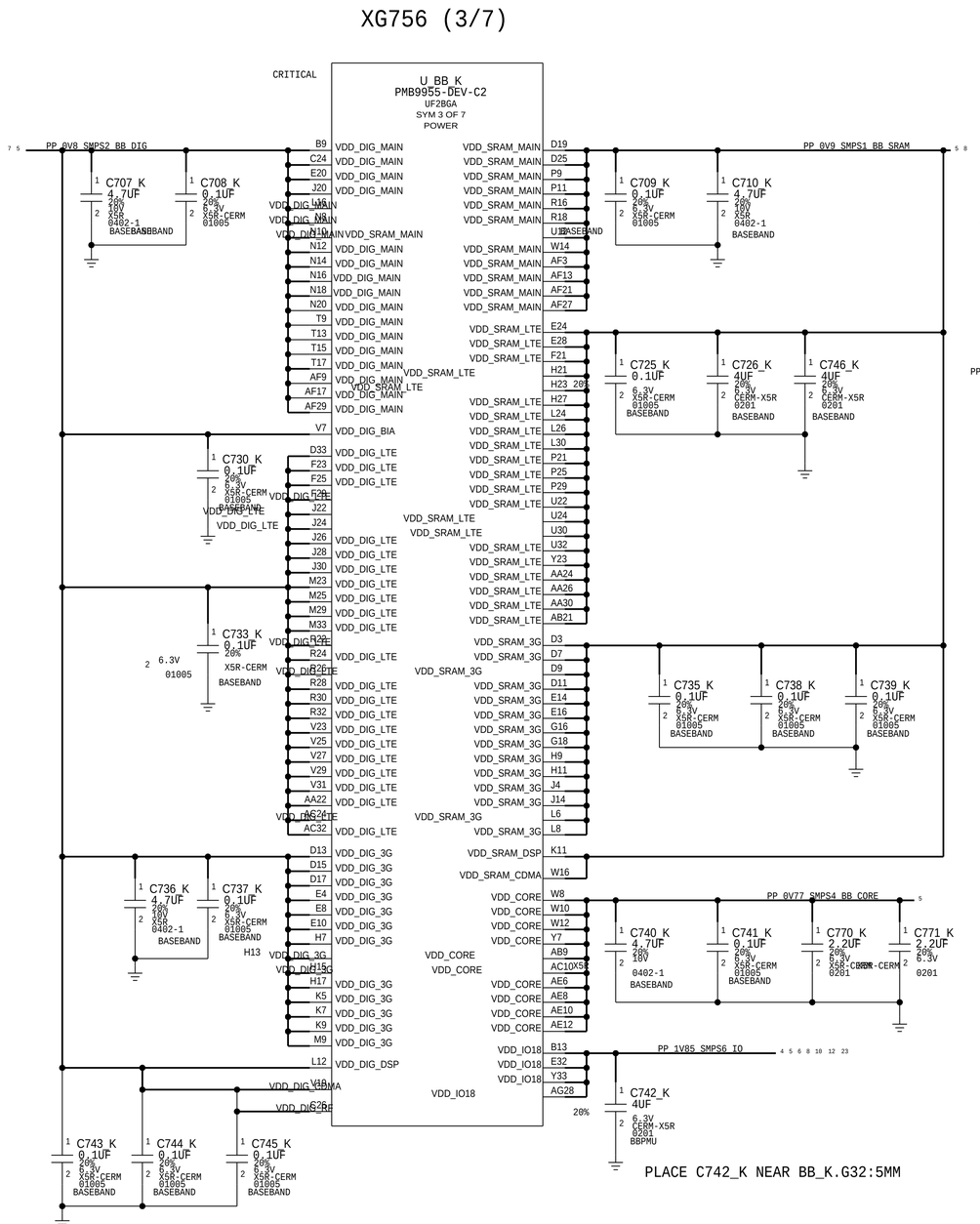

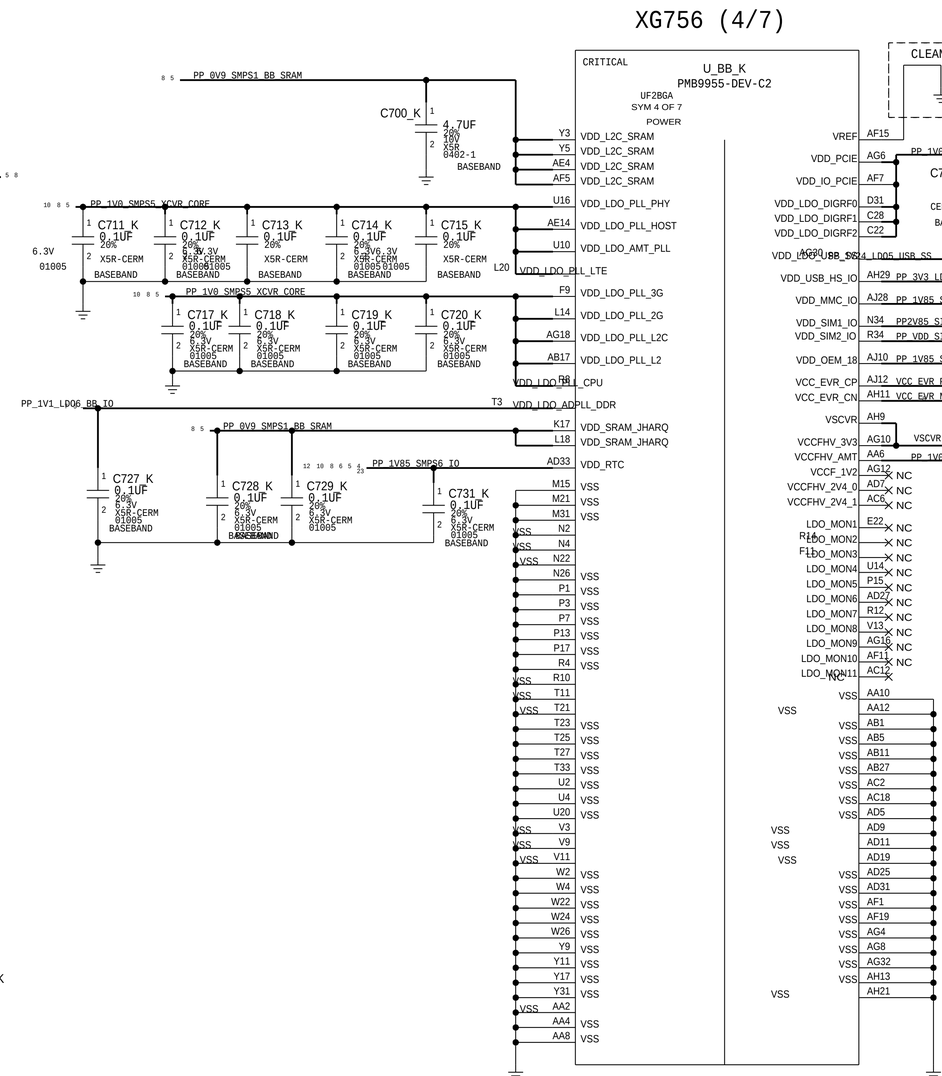

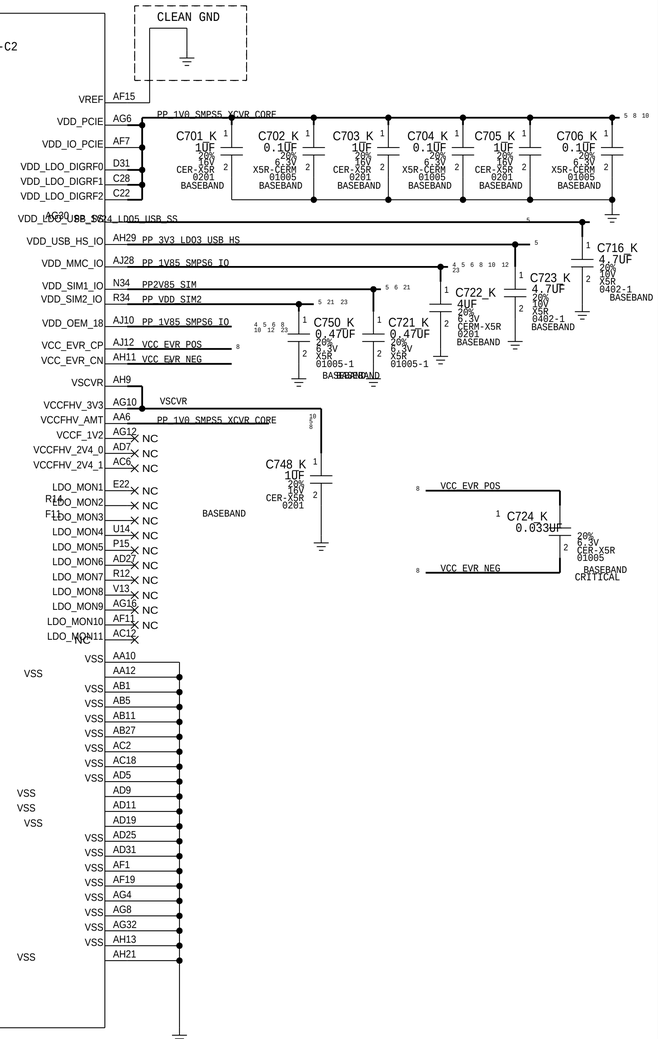

SYNC_MASTER=RADIO_MLB_0.11.0	SYNC_DATE=10/01/2018
PAGE TITLE	BB: DIGITAL PWR

XCVR: TRANSMIT & GNSS

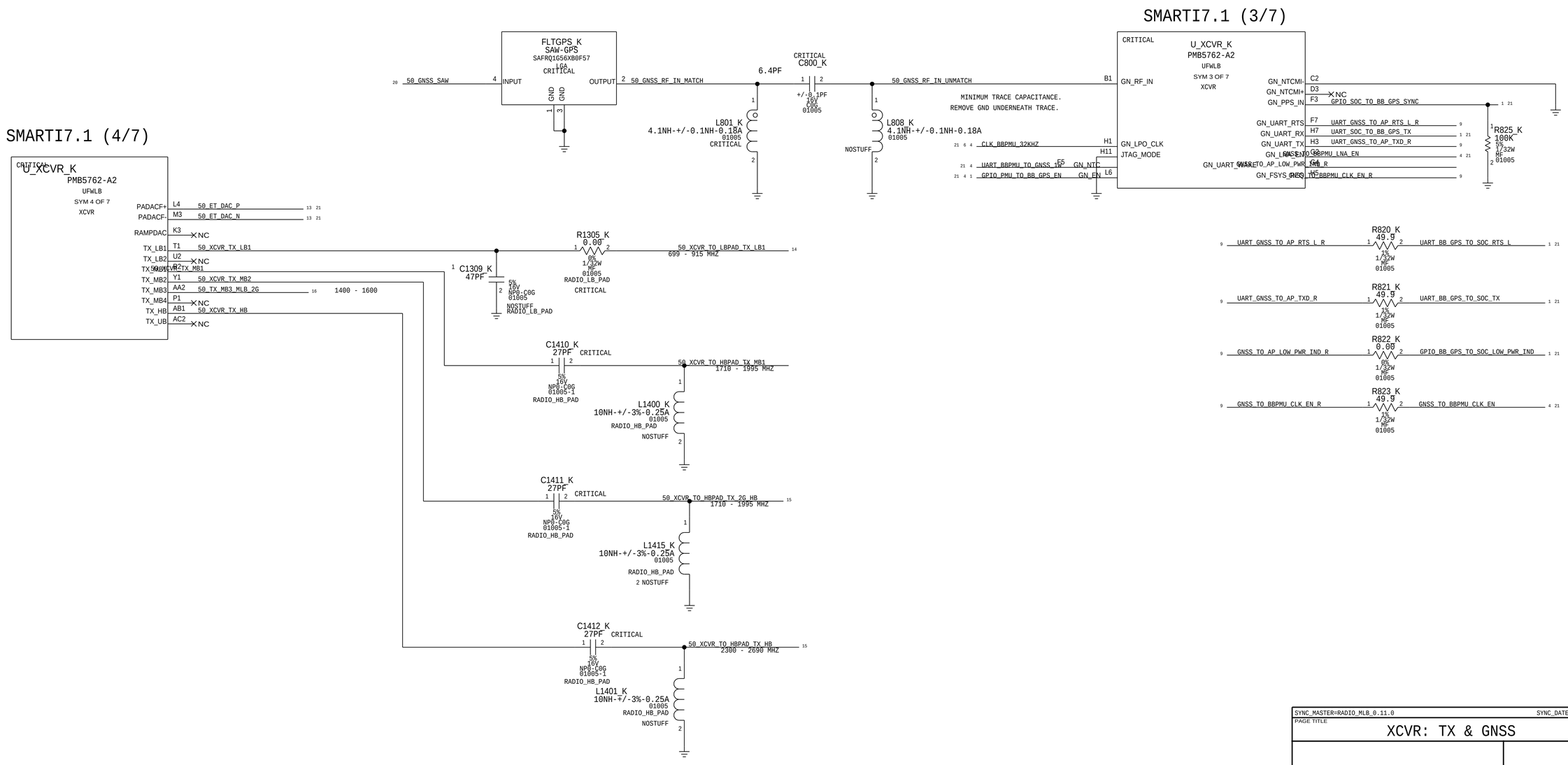

SYNC_MASTER=RADIO_MLB_0.11.0 SYNC_DATE=10/01/2018

PAGE TITLE

XCVR: TX & GNSS

XCVR: INTERFACE & PWR

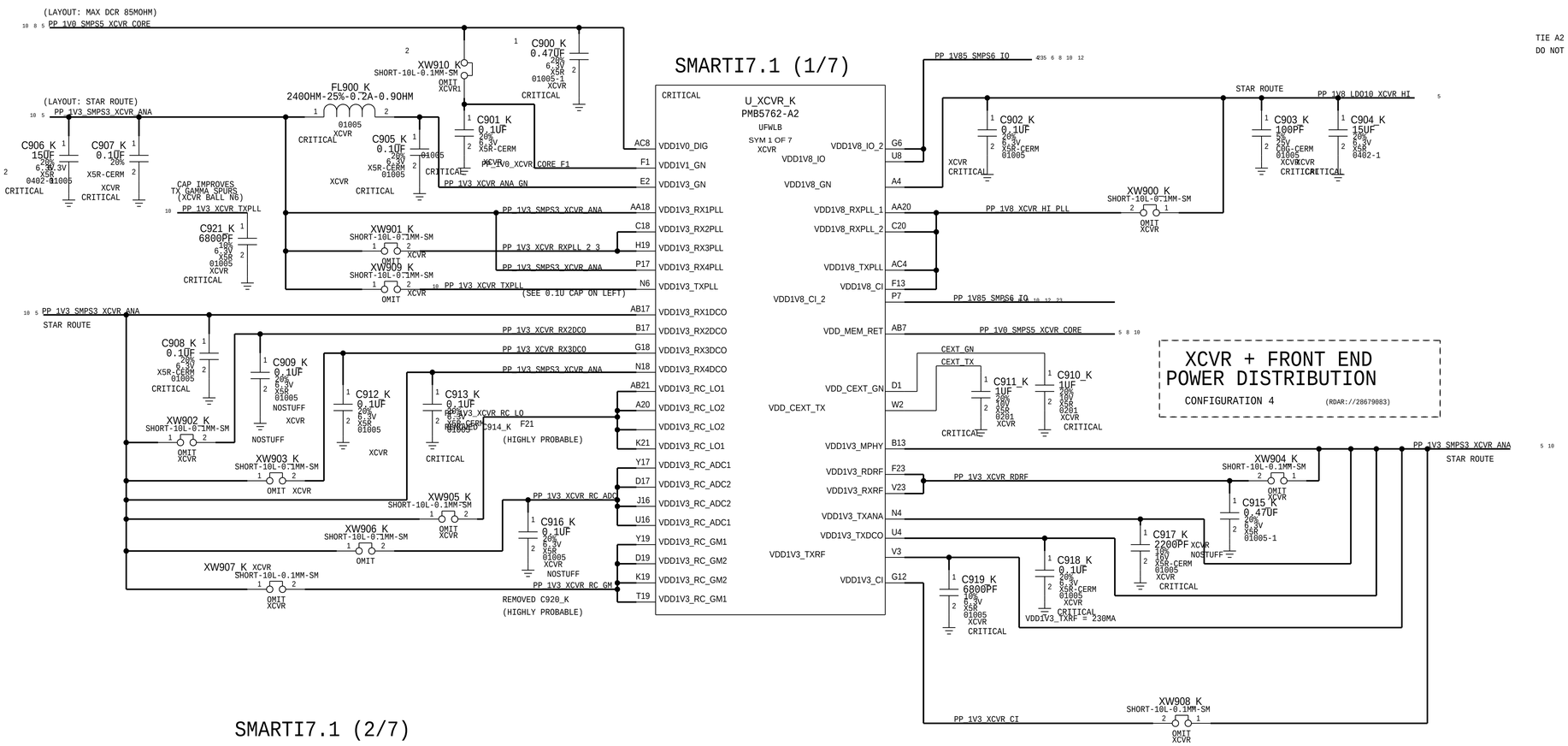

XCVR + FRONT END POWER DISTRIBUTION

CONFIGURATION 4 (RDAR://28679083)

SMARTI7.1 (7/7)

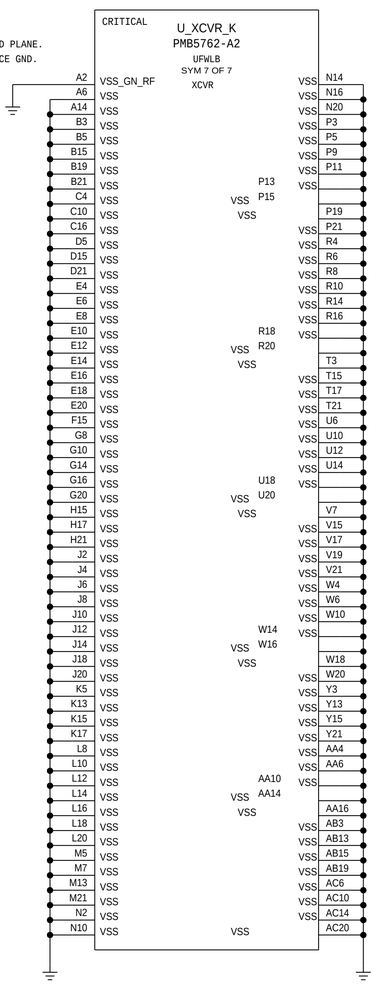

SMARTI7.1 (2/7)

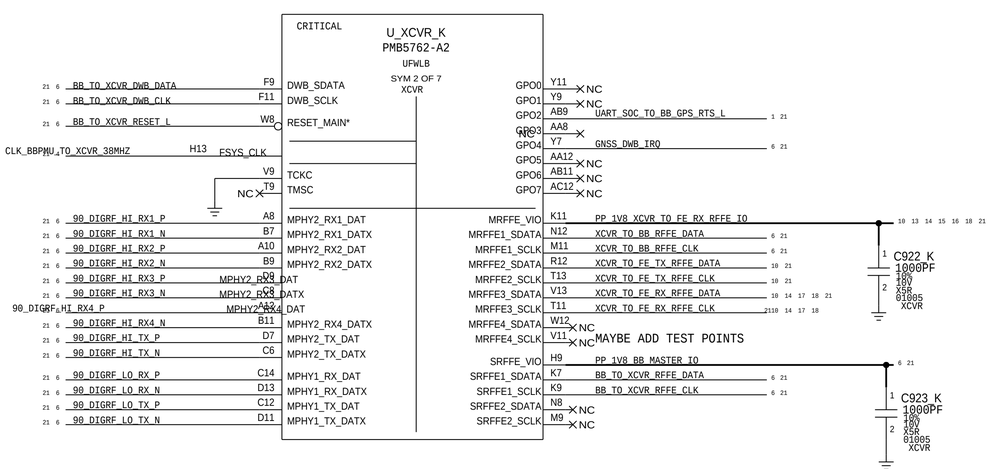

RFFE XCVR DAMPING RESISTORS

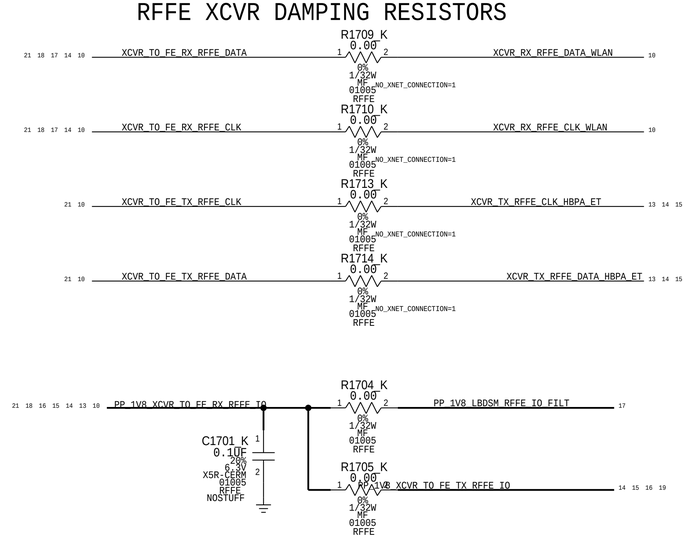

TO WIFI: XCVR TO UAT LAA FEM

PP_1V8_XCVR_TO_FE_RX_RFFE_IO — PP_1V8_XCVR_TO_FE_RX_RFFE_IO (MAKE_BASE=TRUE)
XCVR_RX_RFFE_CLK_WLAN — XCVR_RX_RFFE_CLK_WLAN (MAKE_BASE=TRUE)
XCVR_RX_RFFE_DATA_WLAN — XCVR_RX_RFFE_DATA_WLAN (MAKE_BASE=TRUE)

TO WIFI: XCVR TO LAT LAA FEM

PP_1V8_XCVR_TO_FE_RX_RFFE_IO — PP_1V8_XCVR_TO_FE_RX_RFFE_IO (MAKE_BASE=TRUE)
XCVR_RX_RFFE_CLK_WLAN — XCVR_RX_RFFE_CLK_WLAN (MAKE_BASE=TRUE)
XCVR_RX_RFFE_DATA_WLAN — XCVR_RX_RFFE_DATA_WLAN (MAKE_BASE=TRUE)

SYNC_MASTER=RADIO_MLB_0.11.0 SYNC_DATE=10/01/2018

PAGE TITLE

XCVR: INTERFACE & PWR

CONFIDENTIAL AND PROPRIETARY APPLE SYSTEM DESIGN. FOR REFERENCE PURPOSE ONLY - NOT A CHANGE REQUEST

XCVR: PRIMARY/DIVERSITY RX

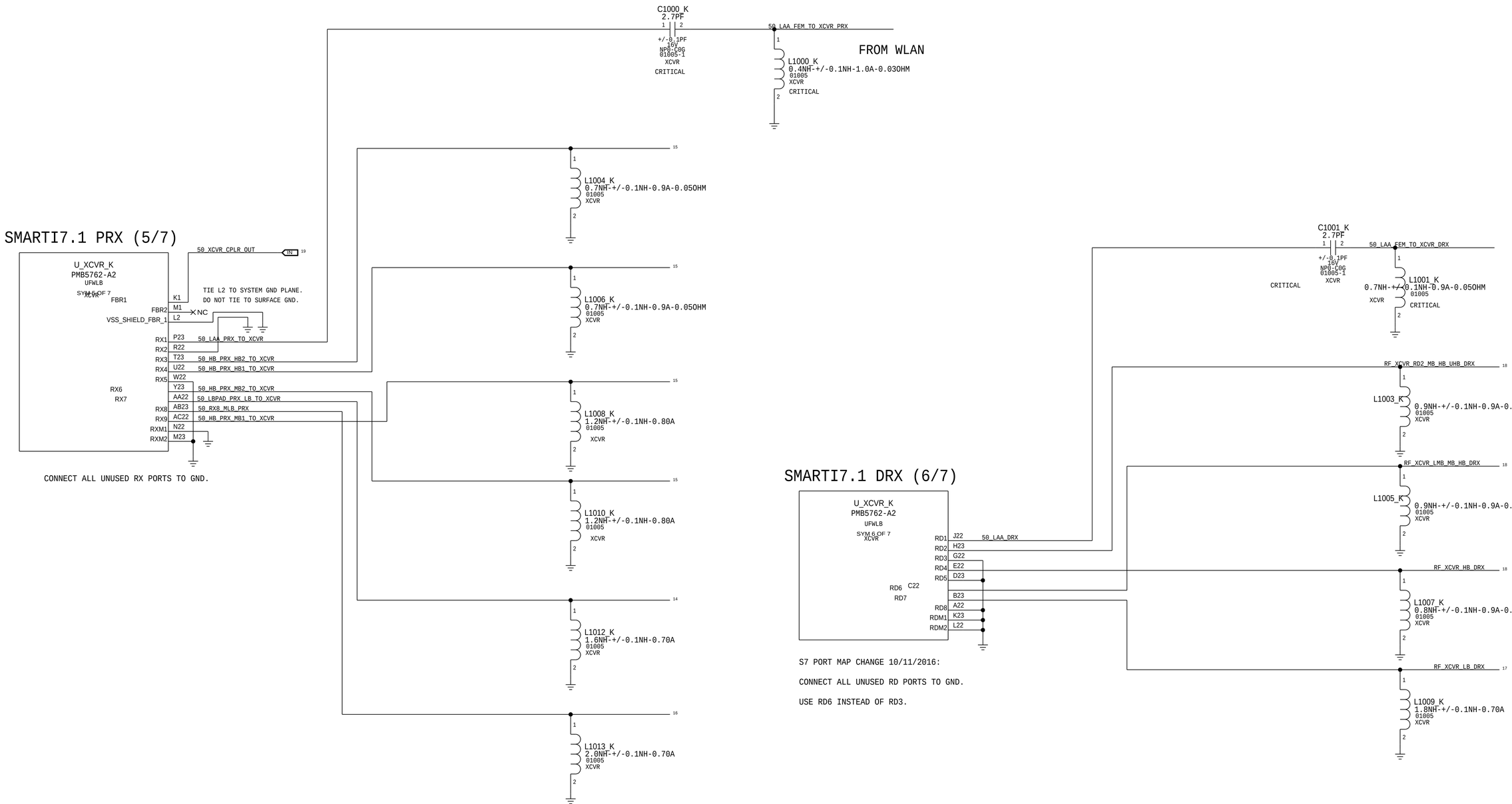

SYNC_MASTER=RADIO_MLB_0.11.0 SYNC_DATE=10/01/2018

PAGE TITLE

XCVR: PRX DRX

CONFIDENTIAL AND PROPRIETARY APPLE SYSTEM DESIGN. FOR REFERENCE PURPOSE ONLY - NOT A CHANGE REQUEST

HW CONFIG OPTIONS

BOOT

BOOTCFG

BOOTSTRAPS ARE INTERNALLY PULLED DOWN

	HW_MON1	HW_MON2	TRIG_IN
NAND	0	0	1
FLASHLESS	1	0	1
FLASHLESS WDOG DIS	1	1	0
NAND (NON-SECURE)	1	1	1

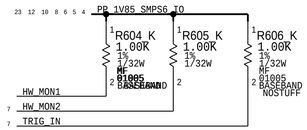

THESE DON'T CHANGE FOR KAROO CONFIG MLBS, DEV ONLY

PERST_L

PERST_L SIGNAL LOW WILL KEEP BB IN RESET.

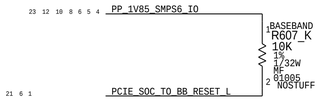

STUFF PU WHEN AP IS NOT CONNECTED
(KAROO CONFIG: USB BOOT)

SWD

SWD ENABLE

TO ENABLE SWD, STUFF R620_K

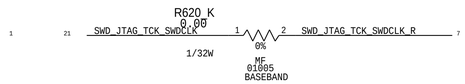

NOSTUFF WITH PROD FUSED BB

SYNC_MASTER=RADIO_MLB_0.11.0 SYNC_DATE=10/01/2018

PAGE TITLE

HW CONFIG OPTIONS

CONFIDENTIAL AND PROPRIETARY APPLE SYSTEM DESIGN. FOR REFERENCE PURPOSE ONLY - NOT A CHANGE REQUEST

ET MODULATOR

ALPES STX E1.0.1 MODULE

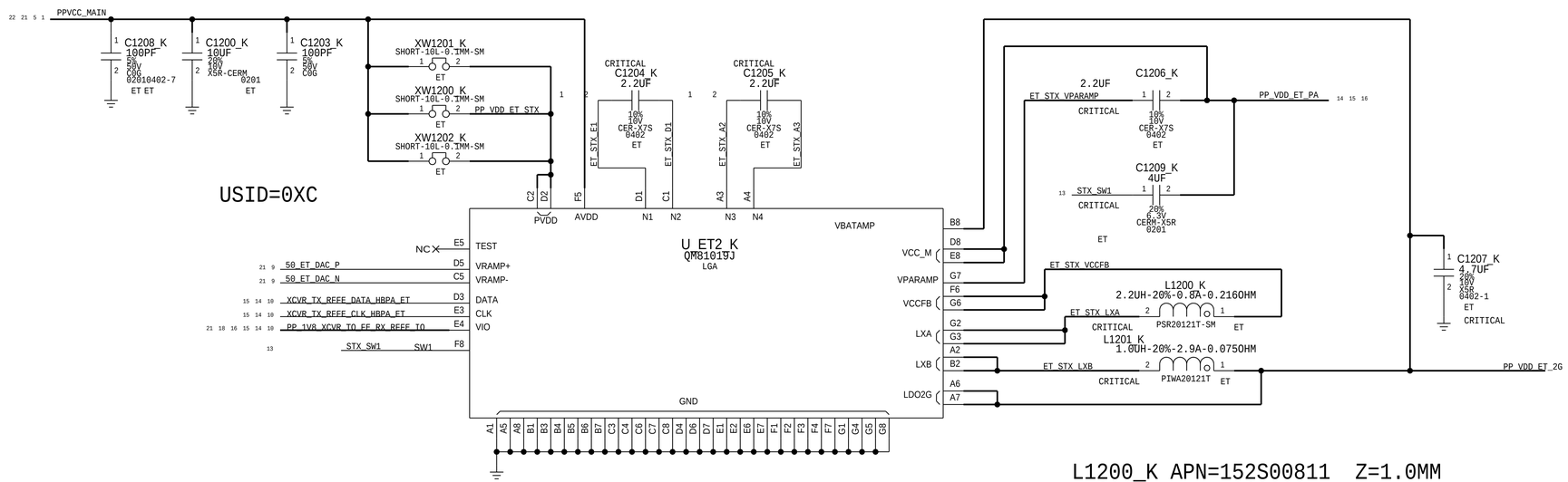

L1200_K APN=152S00811 Z=1.0MM
L1201_K APN=152S00814 Z=1.0MM

C1204_K, C1205_K, C1206_K: KYOCERA APN=138S00167
C1204_K, C1205_K, C1206_K ALTERNATE: MURATA APN=138S00237

SYNC_MASTER=RADIO_MLB_0.11.0 SYNC_DATE=10/01/2018

PAGE TITLE

ET

LB SPAD

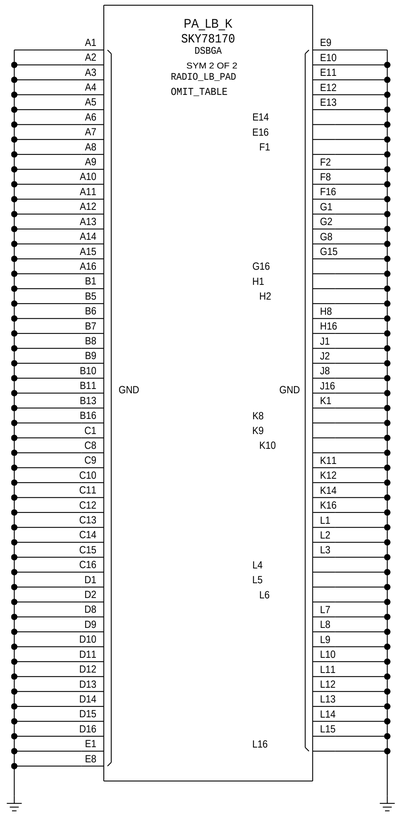

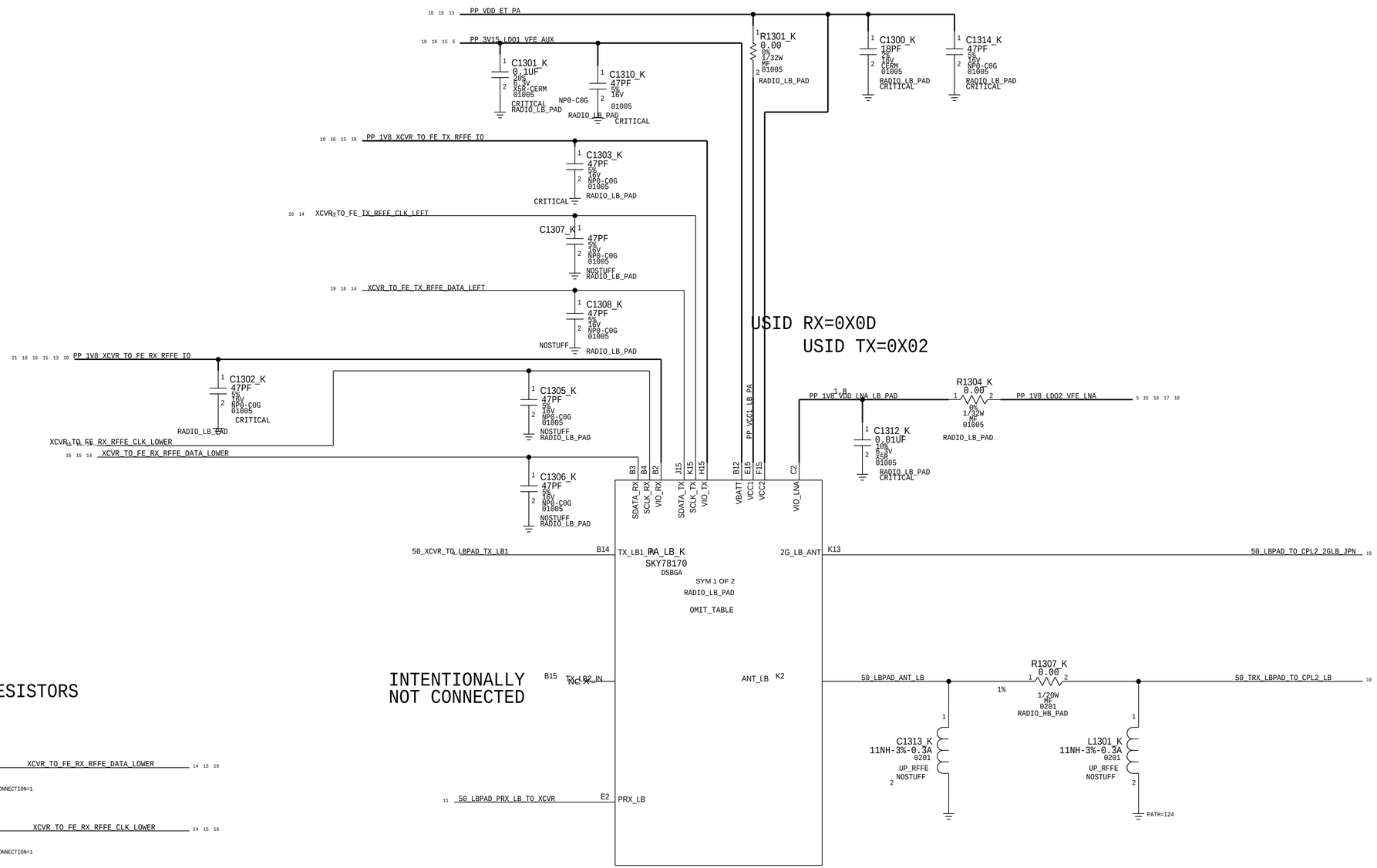

RFFE DAMPING RESISTORS

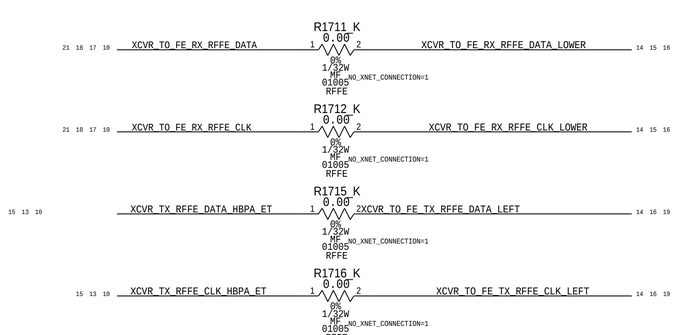

CONFIDENTIAL AND PROPRIETARY APPLE SYSTEM DESIGN. FOR REFERENCE PURPOSE ONLY - NOT A CHANGE REQUEST

SYNC_MASTER=RADIO_MLB_0.11.0 SYNC_DATE=10/01/2018

PAGE TITLE

LB SPAD

HB SPAD

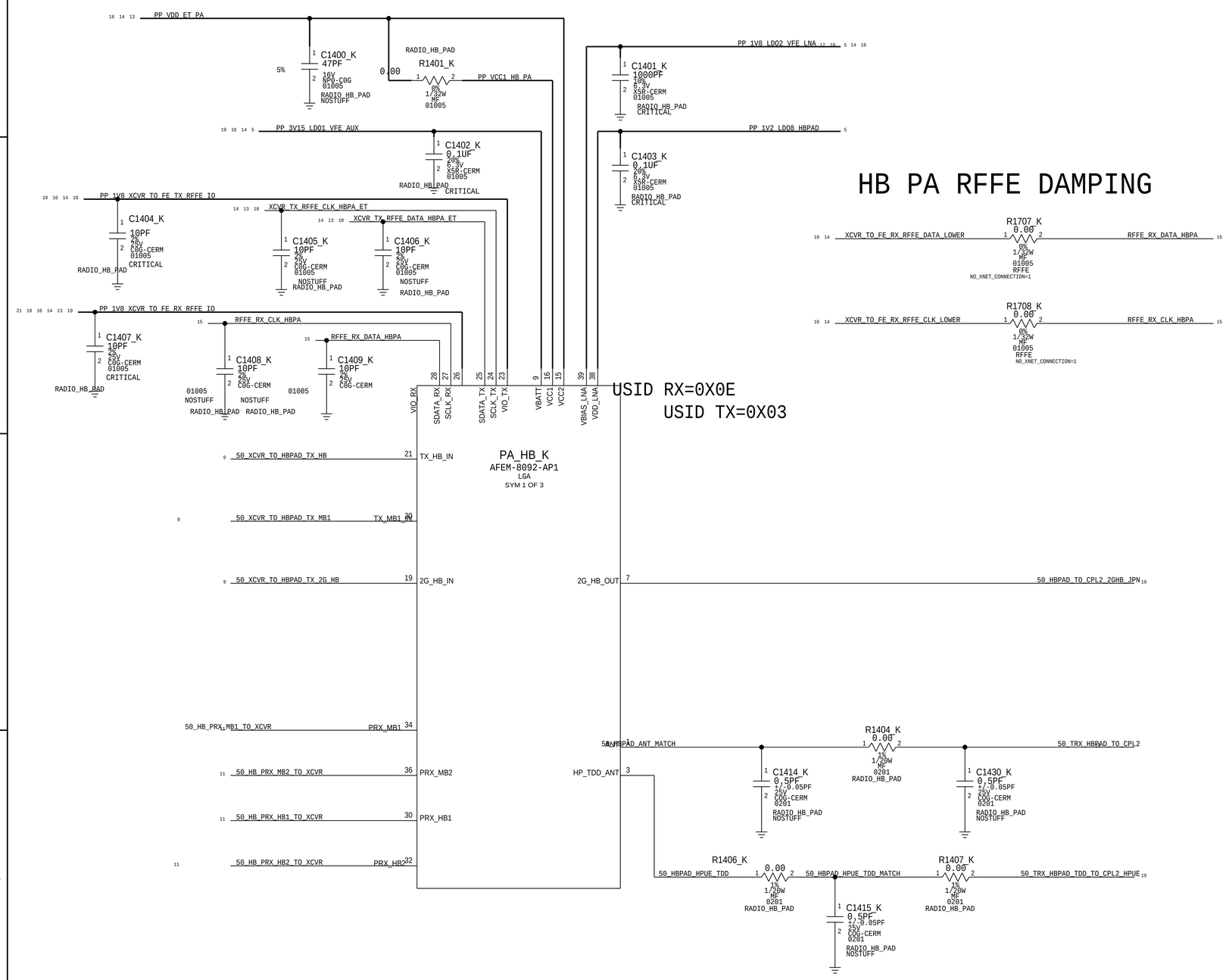

HB PA RFFE DAMPING

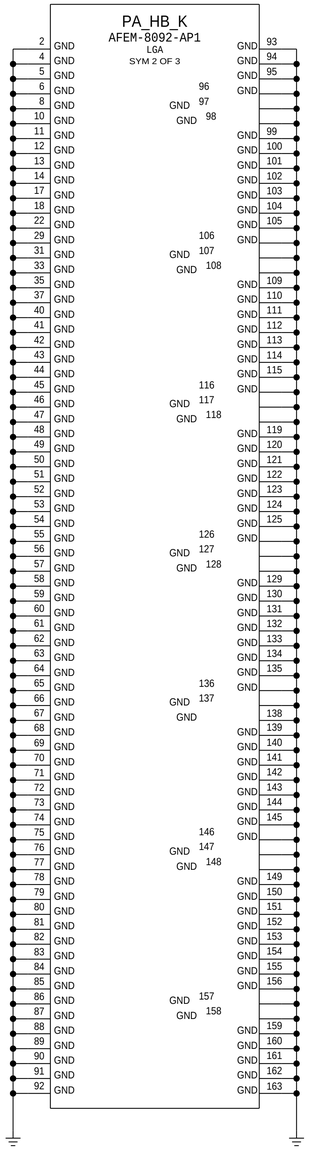

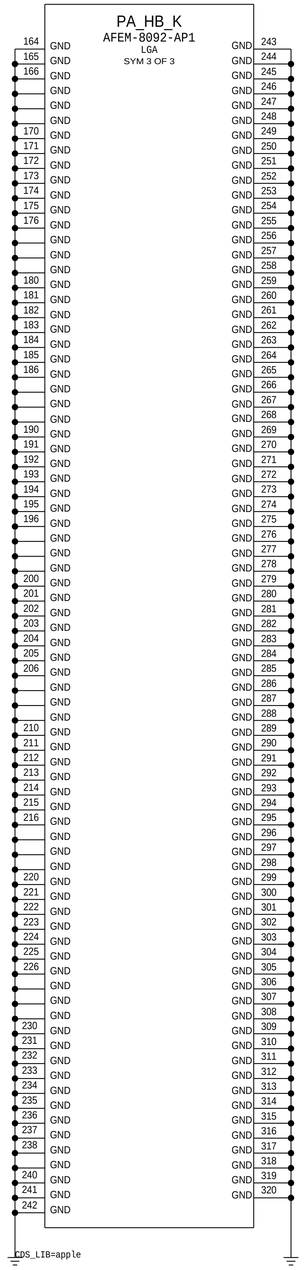

SYNC_MASTER=RADIO_MLB_0.11.0 SYNC_DATE=10/01/2018

PAGE TITLE

HB SPAD

UHB LMB SPAD

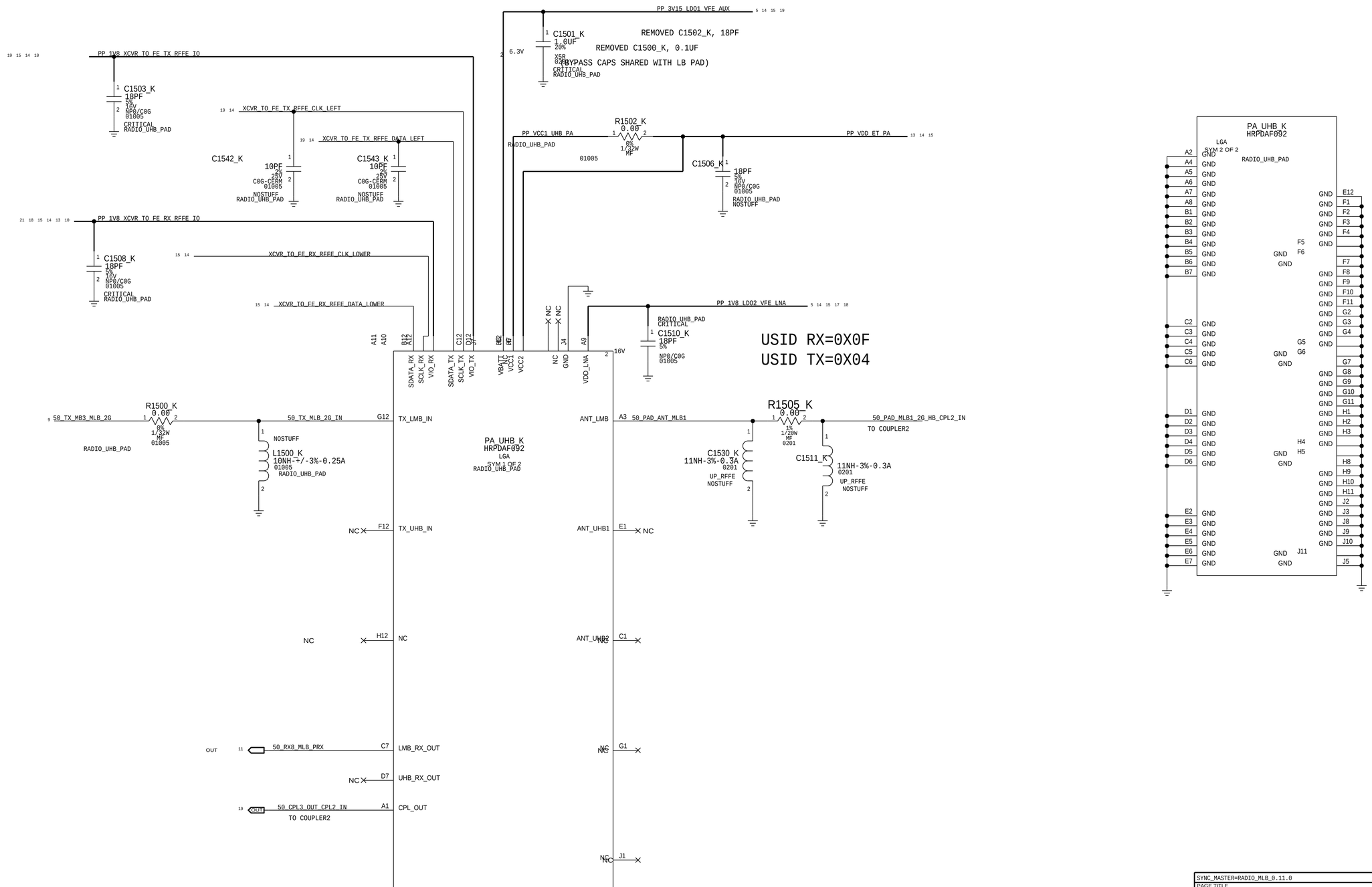

SYNC_MASTER=RADIO_MLB_0.11.0 SYNC_DATE=10/01/2018

PAGE TITLE

UHB LMB SPAD

CONFIDENTIAL AND PROPRIETARY APPLE SYSTEM DESIGN. FOR REFERENCE PURPOSE ONLY - NOT A CHANGE REQUEST

LB DIVERSITY RECEIVE LNA

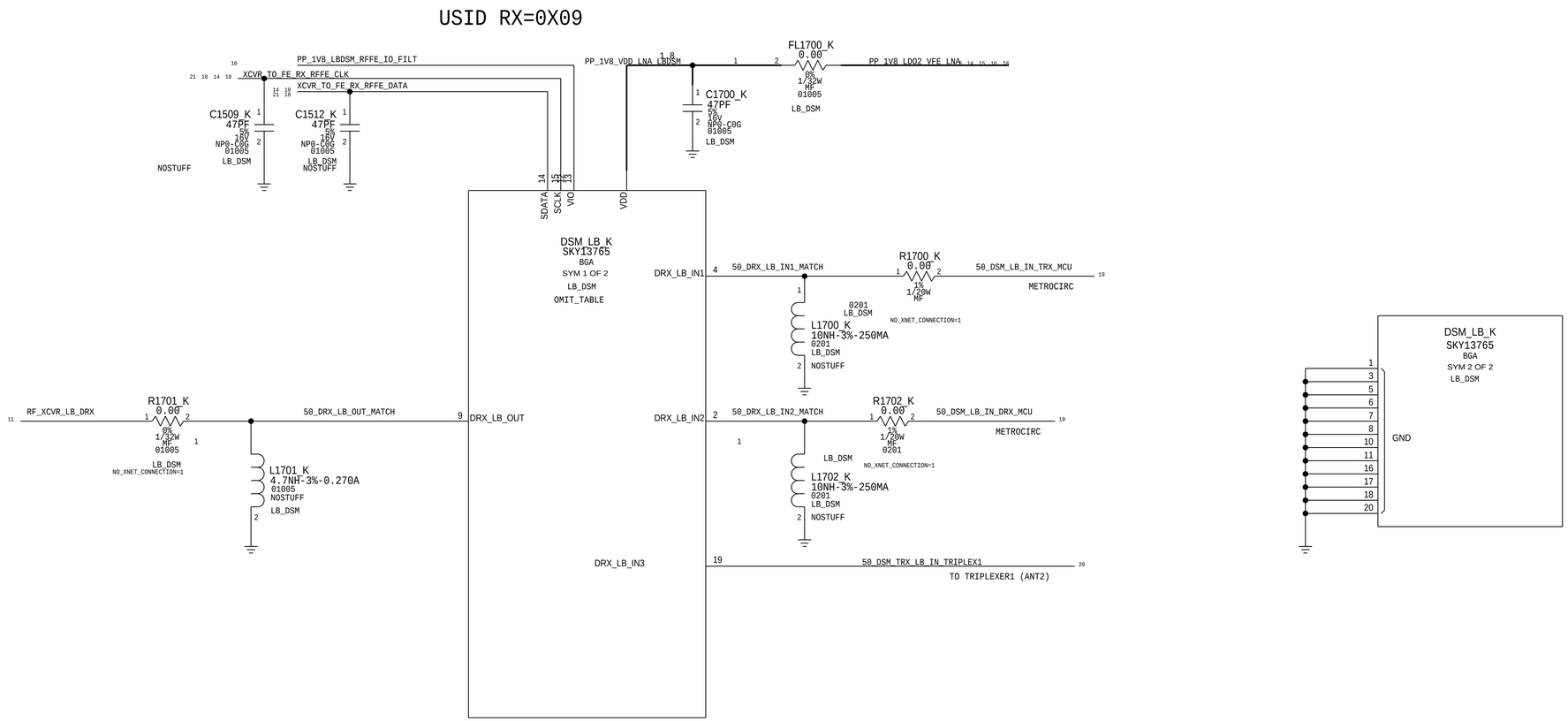

SYNC_MASTER=RADIO_MLB_0.11.0 SYNC_DATE=10/01/2018

PAGE TITLE

LB DIVERSITY RECEIVE LNA

CONFIDENTIAL AND PROPRIETARY APPLE SYSTEM DESIGN. FOR REFERENCE PURPOSE ONLY - NOT A CHANGE REQUEST

HB DIVERSITY RECEIVE LNA

DECOUPLING SHARED WITH LB DSM

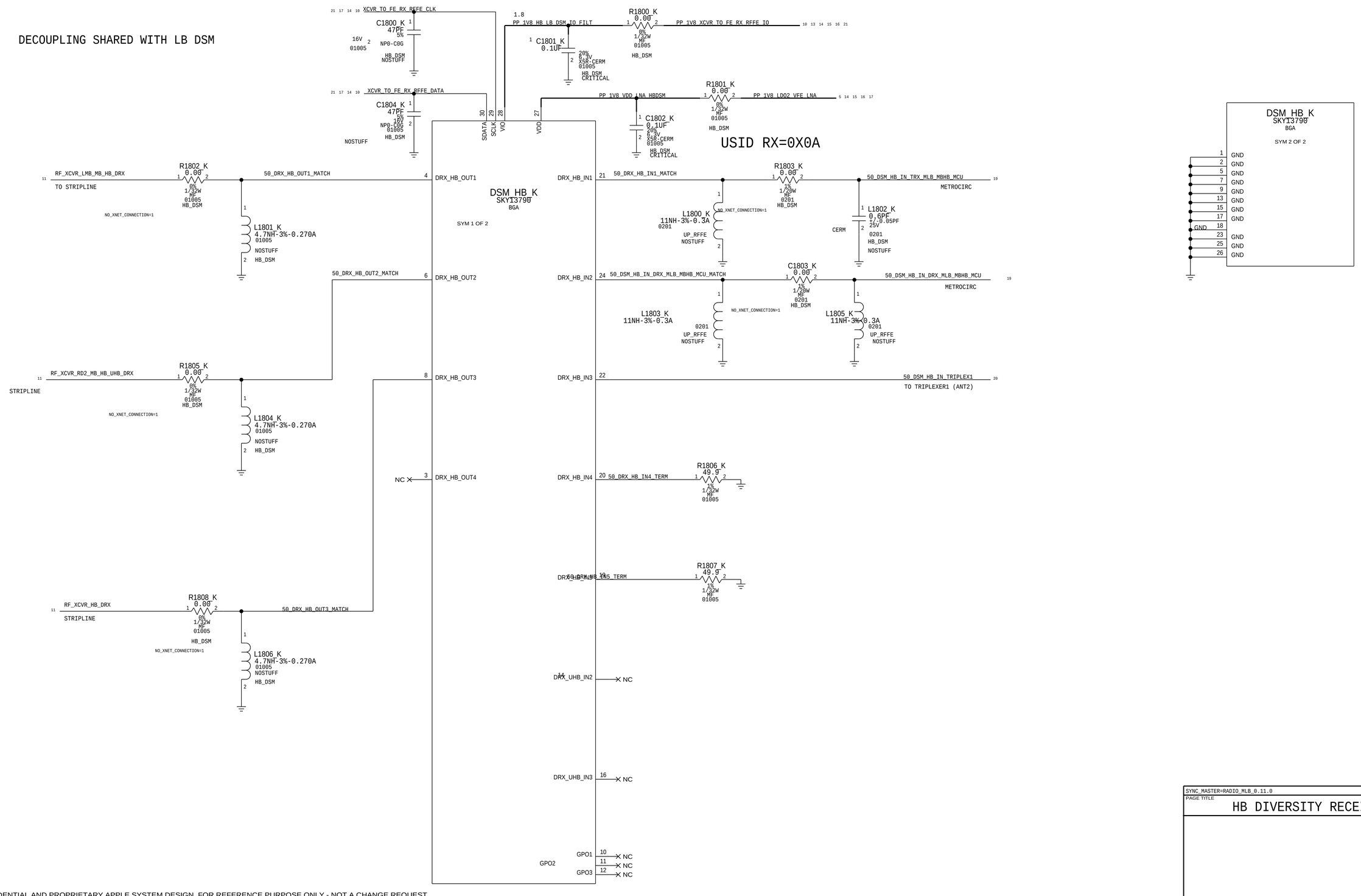

SYNC_MASTER=RADIO_MLB_0.11.0 SYNC_DATE=10/01/2018

PAGE TITLE

HB DIVERSITY RECEIVE LNA

CONFIDENTIAL AND PROPRIETARY APPLE SYSTEM DESIGN. FOR REFERENCE PURPOSE ONLY - NOT A CHANGE REQUEST

LOWER ANTENNA AND COUPLER

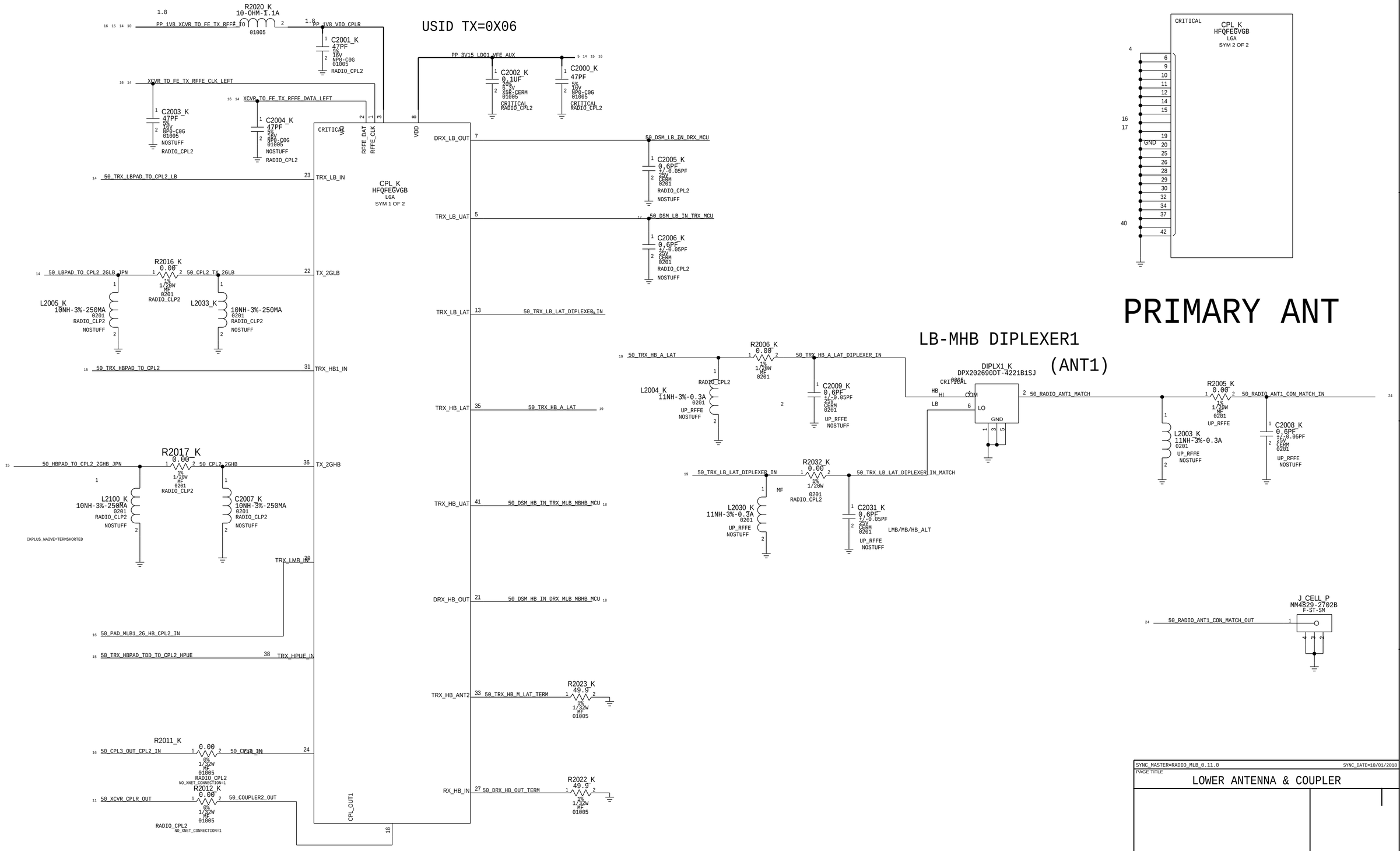

SYNC_MASTER=RADIO_MLB_0.11.0 SYNC_DATE=10/01/2018

PAGE TITLE

LOWER ANTENNA & COUPLER

CONFIDENTIAL AND PROPRIETARY APPLE SYSTEM DESIGN. FOR REFERENCE PURPOSE ONLY - NOT A CHANGE REQUEST

UPPER ANTENNA FEEDS

LB/MHB/GPS/2.4G WLAN QUADPLEXER

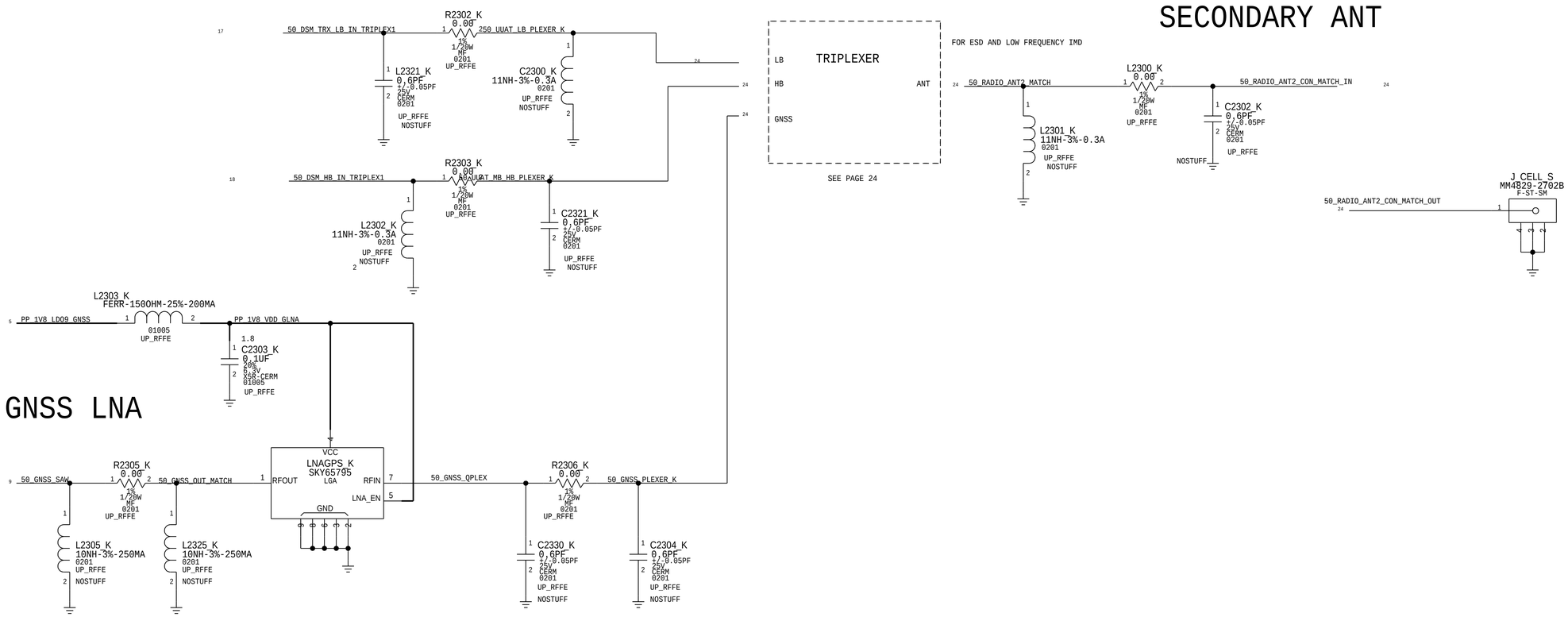

SYNC_MASTER=RADIO_MLB_0.11.0 SYNC_DATE=10/01/2018

PAGE TITLE

UPPER ANTENNA FEEDS

DEBUG: TEST POINTS

CLKS

PP2429_K	P4MM	CLK_BBPMU_TO_BB_38MHZ	4 6
PP2485_K	P4MM	CLK_BBPMU_TO_XCVR_38MHZ	4 10

DEBUG

PP2450_K	P4MM	BB_DEBUG_ERROR	6
PP2401_K	P4MM	BBPMU_TO_BB_MEAS_RDY	4 6
PP2701_K	P4MM	GPIO_SOC_TO_BB_COREDUMP	1 6

POWER-KEEPING

PP2700_K	P4MM	GPIO_BB_TO_SOC_RESET_DET_L	1 6
PP2497_K	P4MM	GPIO_SOC_TO_BB_SDWN_L	1 4
PP2410_K	P4MM	BB_TO_XCVR_RESET_L	6 10
PP24A9_K	P4MM	BB_TO_BBPMU_SDWN_L	4 6
PP2425_K	P4MM	BBPMU_TO_BB_RESET_L	4 6

COEXISTENCE

PP2412_K	P4MM	AP_TO_BBPMU_FORCE_PWM	1 4
PP2498_K	P4MM	TOUCH_TO_MANY_SCAN_STATE	1 5

ET

PP2434_K	P4MM	50_ET_DAC_P	9 13
PP2435_K	P4MM	50_ET_DAC_N	9 13

BBPMU

PP2710_K	P4MM	GNSS_TO_BBPMU_CLK_EN	4 9
PP2703_K	P4MM	BBPMU_TO_BB_PWRGOOD	4 6
PP2704_K	P4MM	CLK_BBPMU_32KHZ	4 6 9
PP2711_K	P4MM	BB_TO_BBPMU_STBY	4 6
PP2712_K	P4MM	BBPMU_TO_BB_RESET_SD_L	4 6
PP2709_K	P4MM	BB_TO_BBPMU_CLK_EN	4 6

SIM2

PP21A0_K	P4MM	SIM2_CLK	6 23
PP21A3_K	P4MM	SIM2_DATA	6 23
PP21A6_K	P4MM	SIM2_RST	6 23
PP21B0_K	P4MM	SIM2_DETECT	6 23
PP21B3_K	P4MM	PP_VDD_SIM2	5 8 23
PP21B5_K	P4MM	SIM2_DATA_R	23

GNSS

PP24E4_K	P4MM	GNSS_DWB_IRQ	6 10
PP24A6_K	P4MM	GPIO_SOC_TO_BB_GPS_SYNC	1 9
PP2419_K	P4MM	GNSS_TO_BBPMU_LNA_EN	4 9
PP24E9_K	P4MM	UART_BBPMU_TO_GNSS_1W	4 9
PP2705_K	P4MM	GPIO_BB_GPS_TO_SOC_LOW_PWR_IND	1 9

I2C

PP24E2_K	P4MM	I2C_BB_EEPROM_SDA	6
PP24E3_K	P4MM	I2C_BB_EEPROM_SCL	6
PP2713_K	P4MM	BB_TO_BBPMU_RP_SDA	4 6
PP2714_K	P4MM	BB_TO_BBPMU_RP_SCL	4 6

MISC

PP24E5_K	P4MM	BB_RESET2_L_TEST	6
PP24E6_K	P4MM	GPIO_SOC_TO_BB_MESA_ON	
PP2702_K	P4MM	MIPI_PTI1_DATA11	7

VDIO

PP24E7_K	P4MM	BBPMU_ANAMON	4
PP2411_K	P4MM	BB_TO_BBPMU_VDIO	6 4
PP2422_K	P4MM	BB_TO_BBPMU_VCLK	4 6
PP2409_K	P4MM	BBPMU_TO_BB_ALERT_L	4 6

AOP UART

PP24E5_K	P4MM	UART_BB_TO_AOP_TX	1 6
PP24E6_K	P4MM	UART_AOP_TO_BB_TX	1 6

PCIE

PP2442_K	P4MM	PCIE_SOC_TO_BB_TX_P	1 6
PP2443_K	P4MM	PCIE_SOC_TO_BB_TX_N	1 6
PP2444_K	P4MM	PCIE_SOC_TO_BB_REFCLK_P	1 6
PP2445_K	P4MM	PCIE_SOC_TO_BB_REFCLK_N	1 6
PP2706_K	P4MM	GPIO_BB_TO_PMU_HOST_WAKE_L	1 6
PP2707_K	P4MM	PCIE_AP_BI_BB_CLKREQ_L_R	6
PP2708_K	P4MM	PCIE_SOC_TO_BB_RESET_L	1 6 12

BB RFFE

PP2488_K	P4MM	BB_TO_L_ANT_RFFE_CLK	6
PP2489_K	P4MM	BB_TO_L_ANT_RFFE_DATA	6
PP24A7_K	P4MM	BB_TO_XCVR_DWB_CLK	6 10
PP24A8_K	P4MM	BB_TO_XCVR_DWB_DATA	6 10
PP24E0_K	P4MM	PP_1V8_BB_MASTER_IO	6 10

DIGRF

LO

PP24B0_K	P2MM-NSM	90_DIGRF_LO_TX_P	6 10
PP24B1_K	P2MM-NSM	90_DIGRF_LO_TX_N	6 10
PP24B2_K	P2MM-NSM	90_DIGRF_LO_RX_P	6 10
PP24B3_K	P2MM-NSM	90_DIGRF_LO_RX_N	6 10

HI

PP24B4_K	P2MM-NSM	90_DIGRF_HI_TX_P	6 10
PP24B5_K	P2MM-NSM	90_DIGRF_HI_TX_N	6 10
PP24B6_K	P2MM-NSM	90_DIGRF_HI_RX1_P	6 10
PP24B7_K	P2MM-NSM	90_DIGRF_HI_RX1_N	6 10
PP24D0_K	P2MM-NSM	90_DIGRF_HI_RX2_P	6 10
PP24D1_K	P2MM-NSM	90_DIGRF_HI_RX2_N	6 10
PP24D2_K	P2MM-NSM	90_DIGRF_HI_RX3_P	6 10
PP24D3_K	P2MM-NSM	90_DIGRF_HI_RX3_N	6 10
PP24D5_K	P2MM-NSM	90_DIGRF_HI_RX4_P	6 10
PP24D6_K	P2MM-NSM	90_DIGRF_HI_RX4_N	6 10

XCVR RFFE

PP24E8_K	P4MM	XCVR_TO_FE_RX_RFFE_IO	15 10 13 14 15
PP2467_K	P4MM	BB_TO_XCVR_RFFE_DATA	6 10
PP2468_K	P4MM	BB_TO_XCVR_RFFE_CLK	6 10
PP2469_K	P4MM	XCVR_TO_BB_RFFE_DATA	6 10
PP2470_K	P4MM	XCVR_TO_BB_RFFE_CLK	6 10
PP2471_K	P4MM	XCVR_TO_FE_TX_RFFE_DATA	10
PP2472_K	P4MM	XCVR_TO_FE_TX_RFFE_CLK	10
PP2473_K	P4MM	XCVR_TO_FE_RX_RFFE_DATA	10 14 17 18
PP2474_K	P4MM	XCVR_TO_FE_RX_RFFE_CLK	10 14 17 18

DEBUG CONNECTOR

MLB 516S1185
FLEX 516S1184

J_DEBUG
20-5857-036-001-829
F-ST-SM

22 21 13 5 1	PPVCC_MAIN	37	38
USB_BB_VBUS	1	2	90_USB_BB_P 6
	3	4	90_USB_BB_N 6
NC	5	6	PP2V85_SIM 5 6 8
4 1 GPIO_PMU_TO_BBPMU_ON	7	8	SIM1_RST 6
1 PP1V8_S2_EXT_SW2	9	10	SIM1_CLK 6
7 BB_JTAG_TDO	11	12	SIM1_DATA 6
7 BB_JTAG_TDI	13	14	NC
7 BB_JTAG_TRST_L	15	16	SIM1_DETECT 6
6 1 GPIO_SOC_TO_BB_RESET_L	17	18	NC
12 1 SWD_JTAG_TCK_SWDCLK	19	20	UART_SOC_TO_BB_GPS_TX 1 9
SWD_JTAG_BB_TMS_SWDIO	21	22	UART_BB_GPS_TO_SOC_RTS_L 1 9
22 21 13 5 1 PPVCC_MAIN	23	24	UART_BB_GPS_TO_SOC_TX 1 9
NC	25	26	UART_SOC_TO_BB_GPS_RTS_L 1 10
6 UART_BB_DEBUG_TXD	27	28	GPIO_PMU_TO_BB_GPS_EN 1 4 9
6 UART_BB_DEBUG_RXD	29	30	NC
NC	31	32	UART_COEX_BB_TO_WLAN_TXD 1 6
	33	34	UART_COEX_WLAN_TO_BB_TXD 1 6
NC	35	36	NC
	39	40	
	42		

USB_BB_VBUS 21

R2700_K
20K
1%
1/32W
MF
01005
2

PP_1V8_BB_USB_VBUS 6

R2701_K
16K
1%
1/32W
MF
01005
2

CONFIDENTIAL AND PROPRIETARY APPLE SYSTEM DESIGN. FOR REFERENCE PURPOSE ONLY - NOT A CHANGE REQUEST

SYNC_MASTER=RADIO_MLB_0.11.0 SYNC_DATE=10/01/2018

PAGE TITLE

TEST POINTS

VENUS

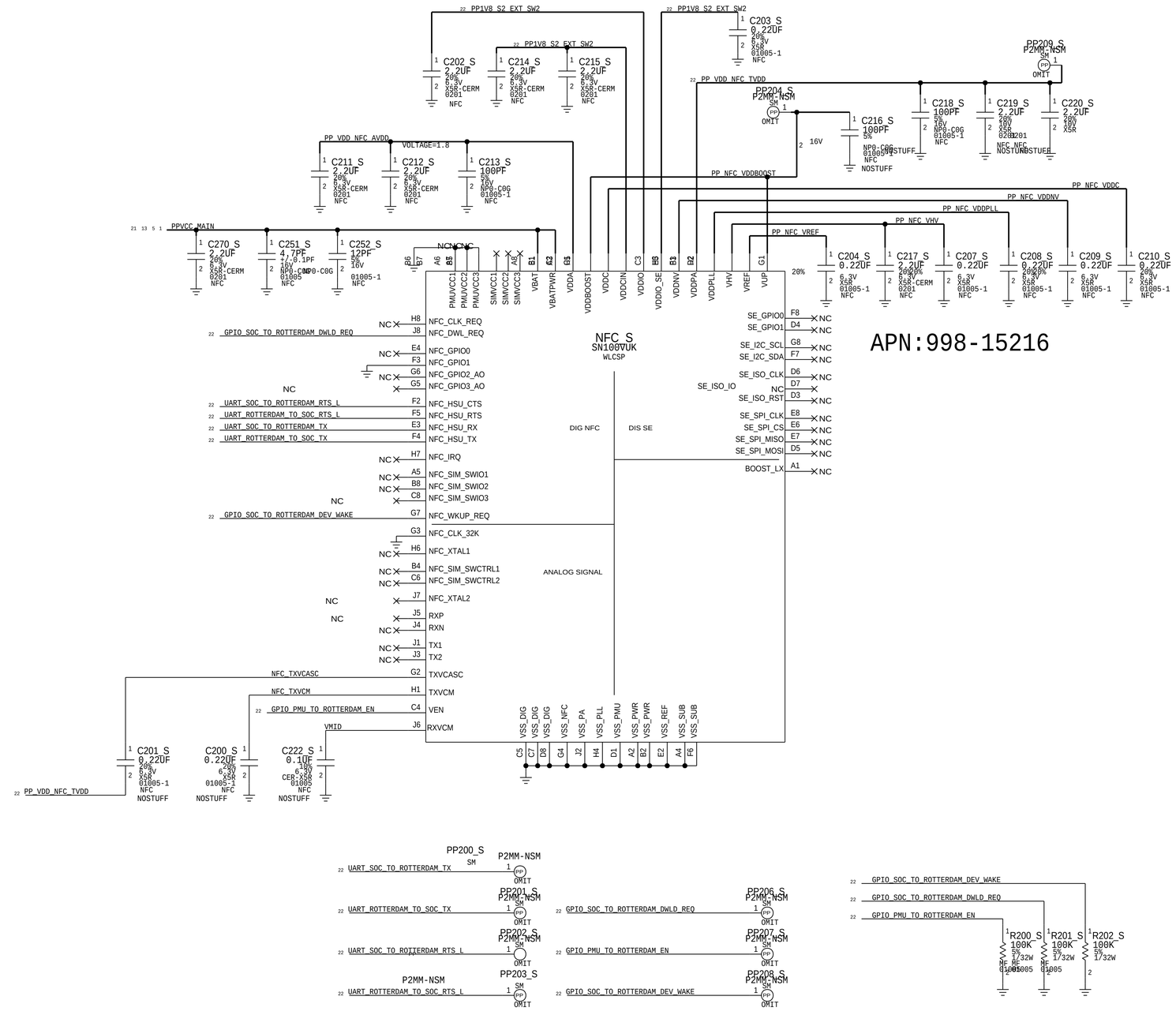

SYNC_MASTER=RADIO_MLB_0.11.0 SYNC_DATE=10/01/2018

PAGE TITLE

VENUS

ESIM

21 6 SIM2_CLK MAKE_BASE=TRUE — SIM2_CLK 23
21 6 SIM2_DATA MAKE_BASE=TRUE — SIM2_DATA 23
21 6 SIM2_RST MAKE_BASE=TRUE — SIM2_RST 23
21 6 SIM2_DETECT MAKE_BASE=TRUE — SIM2_DETECT
21 8 5 PP_VDD_SIM2 MAKE_BASE=TRUE — PP_VDD_SIM2
21 SIM2_DATA_R MAKE_BASE=TRUE — SIM2_DATA_R 23

VINYL
APN: 337S00578
NL0, BIRCH 4.0 DEV 2

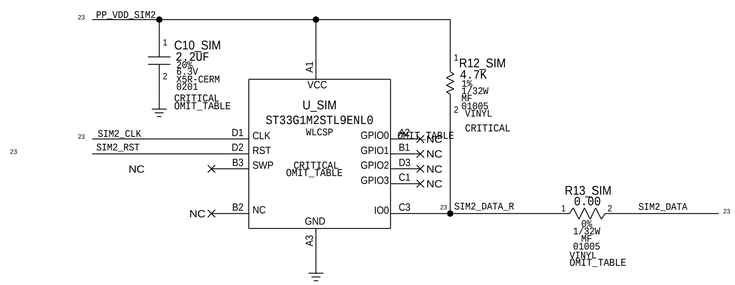

ESIM DETECT

ESIM = STUFF PU
NO ESIM = STUFF PD

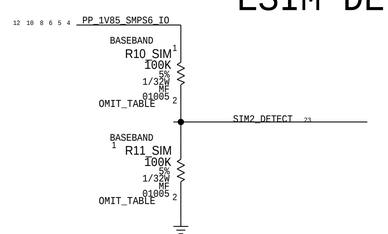

SYNC_MASTER=RADIO_MLB_0.11.0 SYNC_DATE=10/01/2018
PAGE TITLE
SIM: ESIM

ICE18.8 ONLY - TRIPLEXER & ANT1/2

LB/MHB/GPS TRIPLEXER

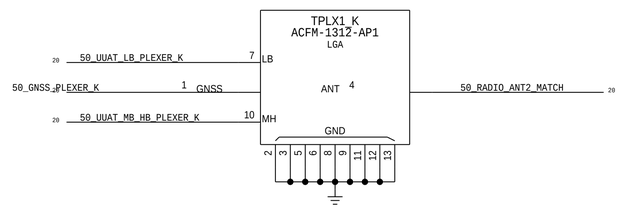

CKPLUS_WAIVE=TERMSHORTED

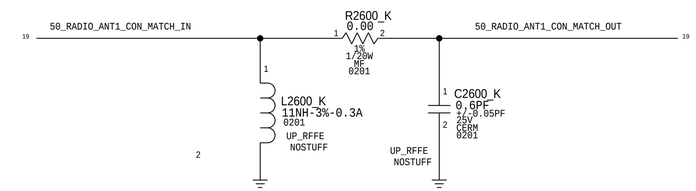

CKPLUS_WAIVE=TERMSHORTED

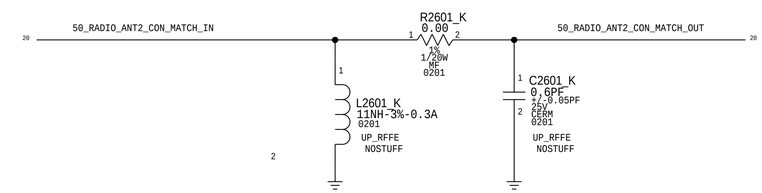

SYNC_MASTER=RADIO_MLB_0.11.0 SYNC_DATE=10/01/2018

PAGE TITLE

18.8 TRIPLEXER & ANT1 & 2