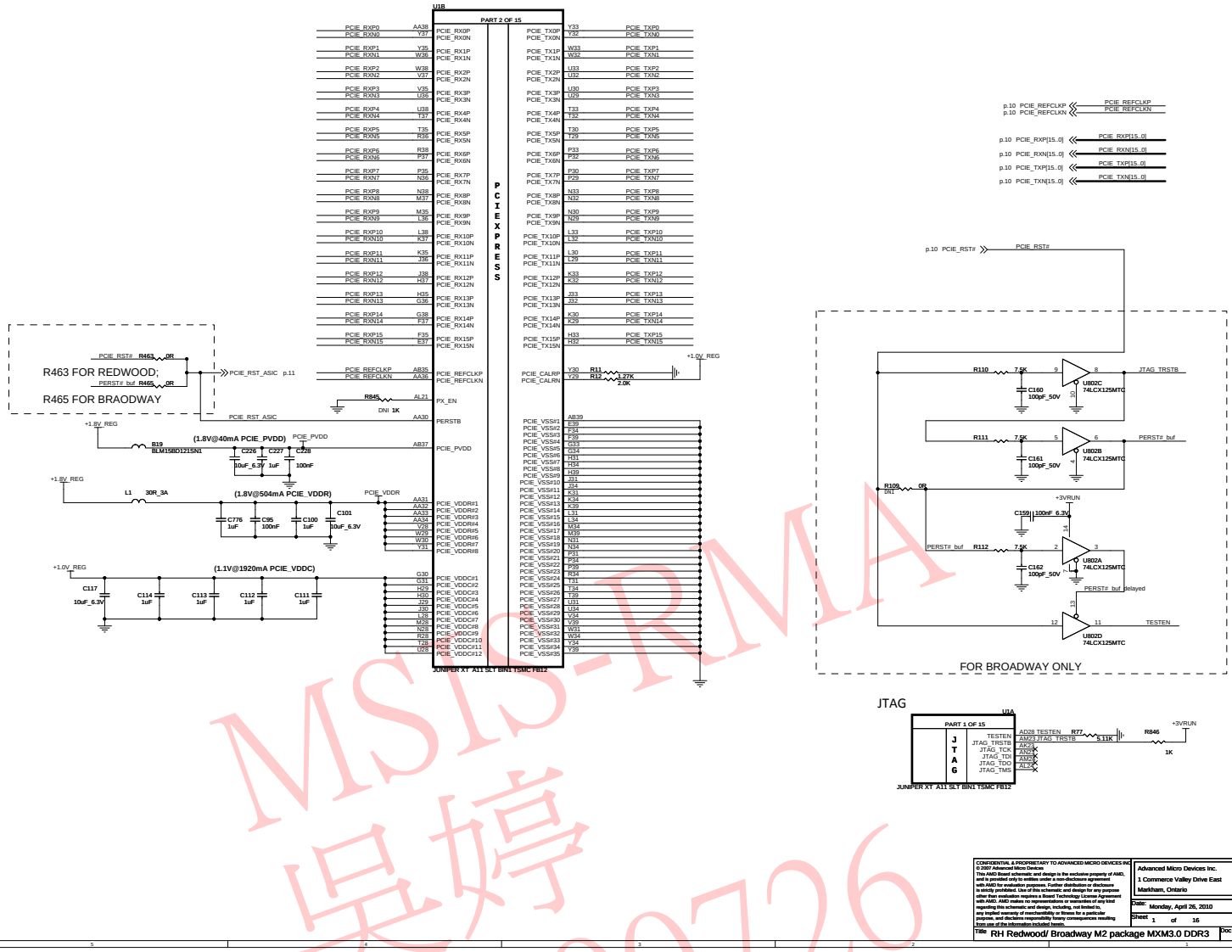

MSIS-RMA
吴婷
20100726

CONFIDENTIAL & PROPRIETARY TO ADVANCED MICRO DEVICES INC.
© 2007 Advanced Micro Devices
This AMD Board schematic and design is the exclusive property of AMD, and is provided only to entities under a non-disclosure agreement with AMD for evaluation purposes. Further distribution or disclosure is strictly prohibited. Use of this schematic and design for any purpose other than evaluation requires a Board Technology License Agreement with AMD. AMD makes no representations or warranties of any kind regarding this schematic and design, including, not limited to, any implied warranty of merchantibility or fitness for a particular purpose, and disclaims responsibility forany consequences resulting from use of the information included herein.

Advanced Micro Devices Inc.
1 Commerce Valley Drive East
Markham, Ontario

Date:	Monday, April 26, 2010
Rev	1
Sheet	1 of 16
Title	RH Redwood/ Broadway M2 package MXM3.0 DDR3
Doc No.	105-C110XX-00

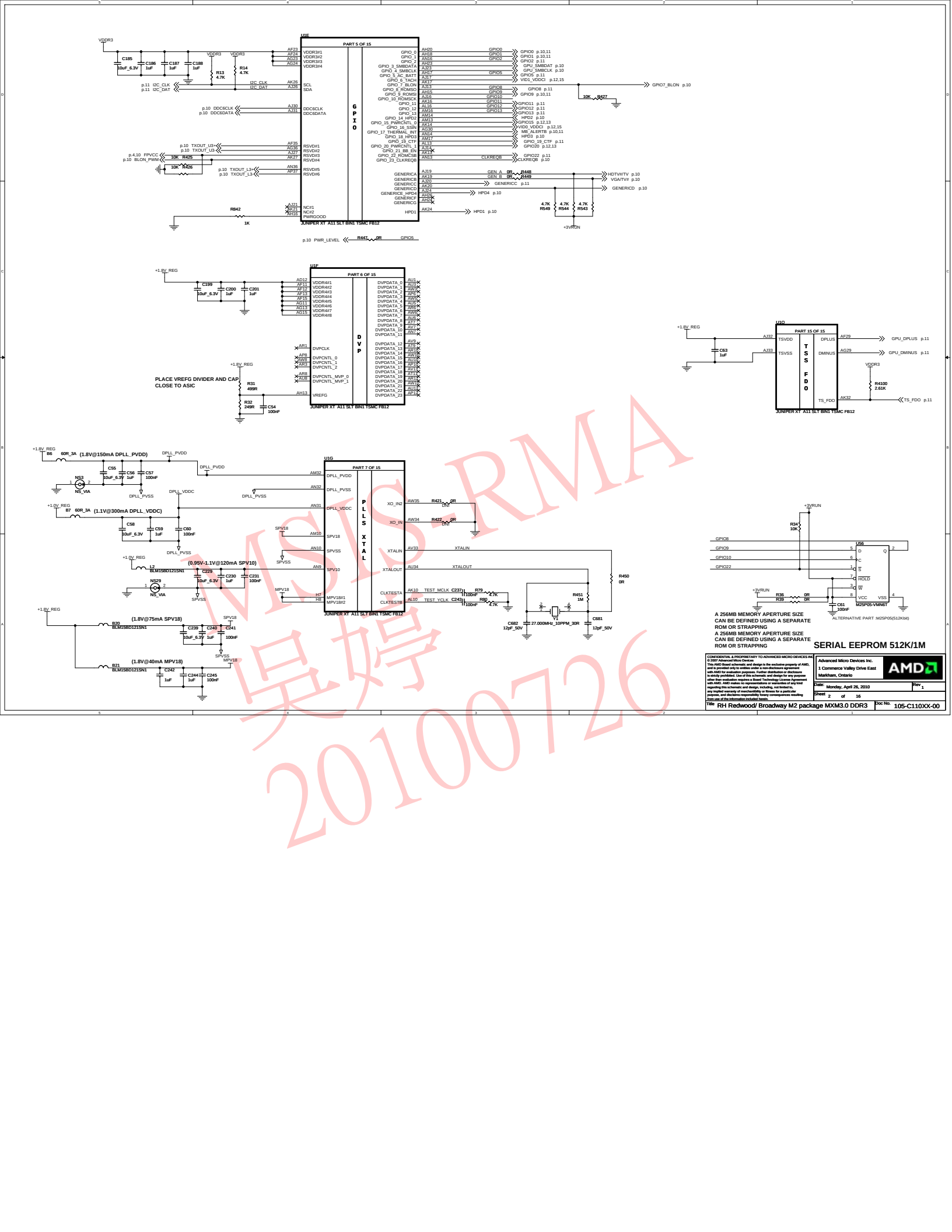

MSIS-RMA
吴婷
20100726

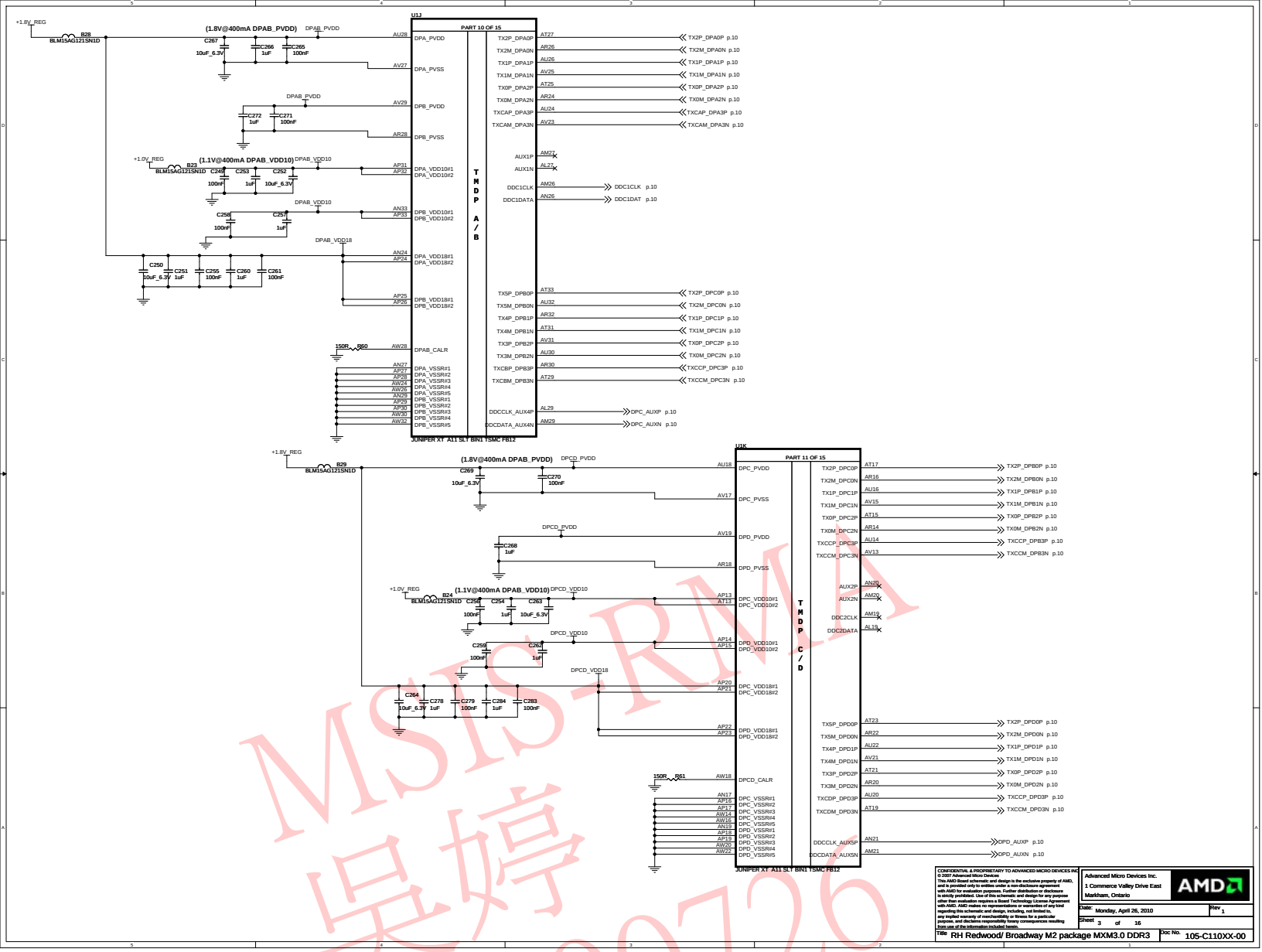

MSI S-RMA
吳婷
20100726

CONFIDENTIAL & PROPRIETARY TO ADVANCED MICRO DEVICES INC.
© 2007 Advanced Micro Devices
This AMD Board schematic and design is the exclusive property of AMD, and is provided only to entities under a non-disclosure agreement with AMD for evaluation purposes. Further distribution or disclosure is strictly prohibited. Use of this schematic and design for any purpose other than evaluation requires a Board Technology License Agreement with AMD. AMD makes no representations or warranties of any kind regarding this schematic and design, including, not limited to, any implied warranty of merchantibility or fitness for a particular purpose, and disclaims responsibility forany consequences resulting from use of the information included herein.

Advanced Micro Devices Inc.
1 Commerce Valley Drive East
Markham, Ontario

Date:	Monday, April 26, 2010
Rev	1
Sheet	3 of 16
Title	RH Redwood/ Broadway M2 package MXM3.0 DDR3
Doc No.	105-C110XX-00

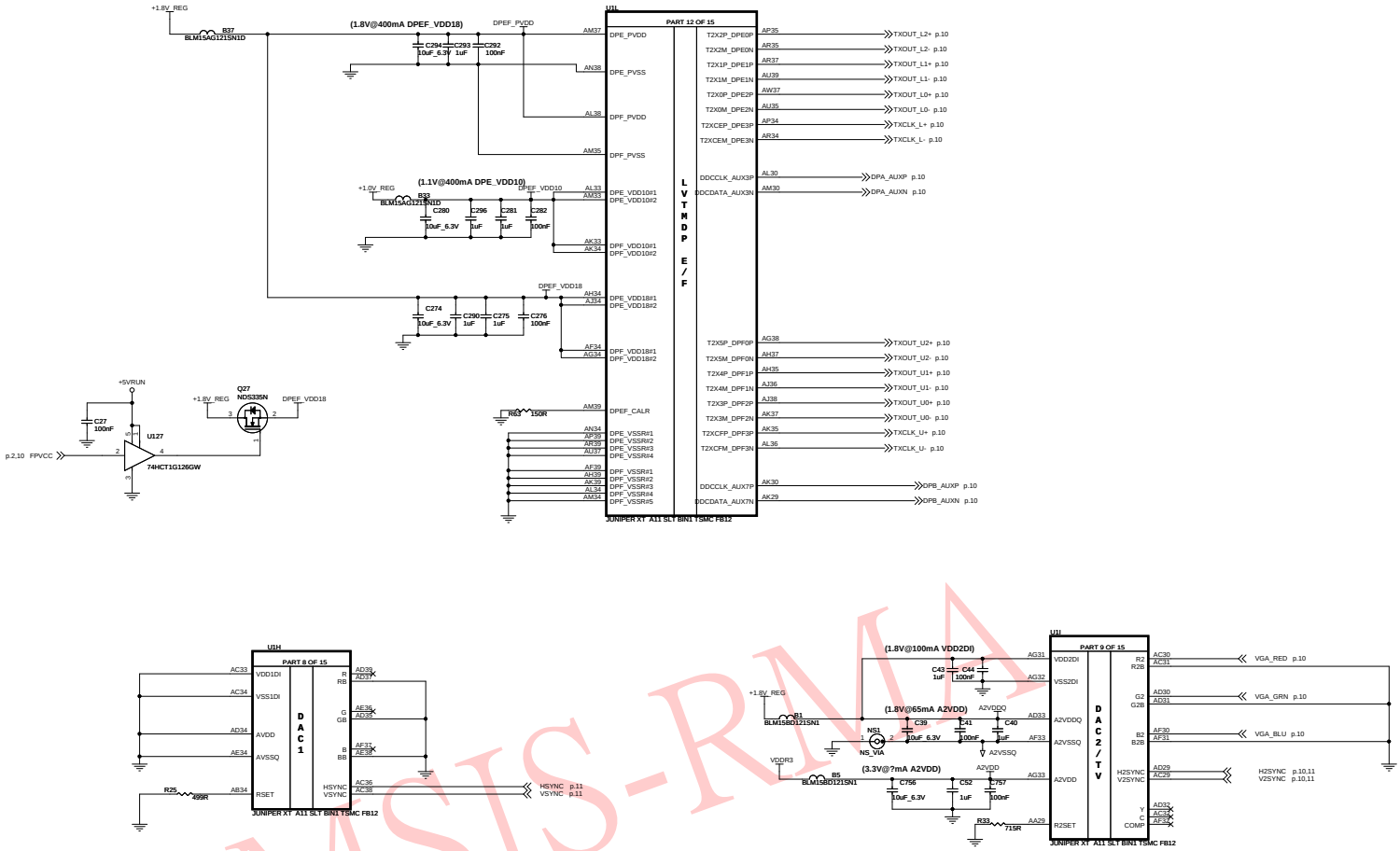

MSIS-RMA
吳婷
20100726

CONFIDENTIAL & PROPRIETARY TO ADVANCED MICRO DEVICES INC.
© 2007 Advanced Micro Devices
This AMD Board schematic and design is the exclusive property of AMD, and is provided only to entities under a non-disclosure agreement with AMD for evaluation purposes. Further distribution or disclosure is strictly prohibited. Use of this schematic and design for any purpose other than evaluation requires a Board Technology License Agreement with AMD. AMD makes no representations or warranties of any kind regarding this schematic and design, including, not limited to, any implied warranty of merchantibility or fitness for a particular purpose, and disclaims responsibility forany consequences resulting from use of the information included herein.

Advanced Micro Devices Inc.
1 Commerce Valley Drive East
Markham, Ontario

Date:	Monday, April 26, 2010
Rev	1
Sheet	4 of 16
Title	RH Redwood/ Broadway M2 package MXM3.0 DDR3
Doc No.	105-C110XX-00

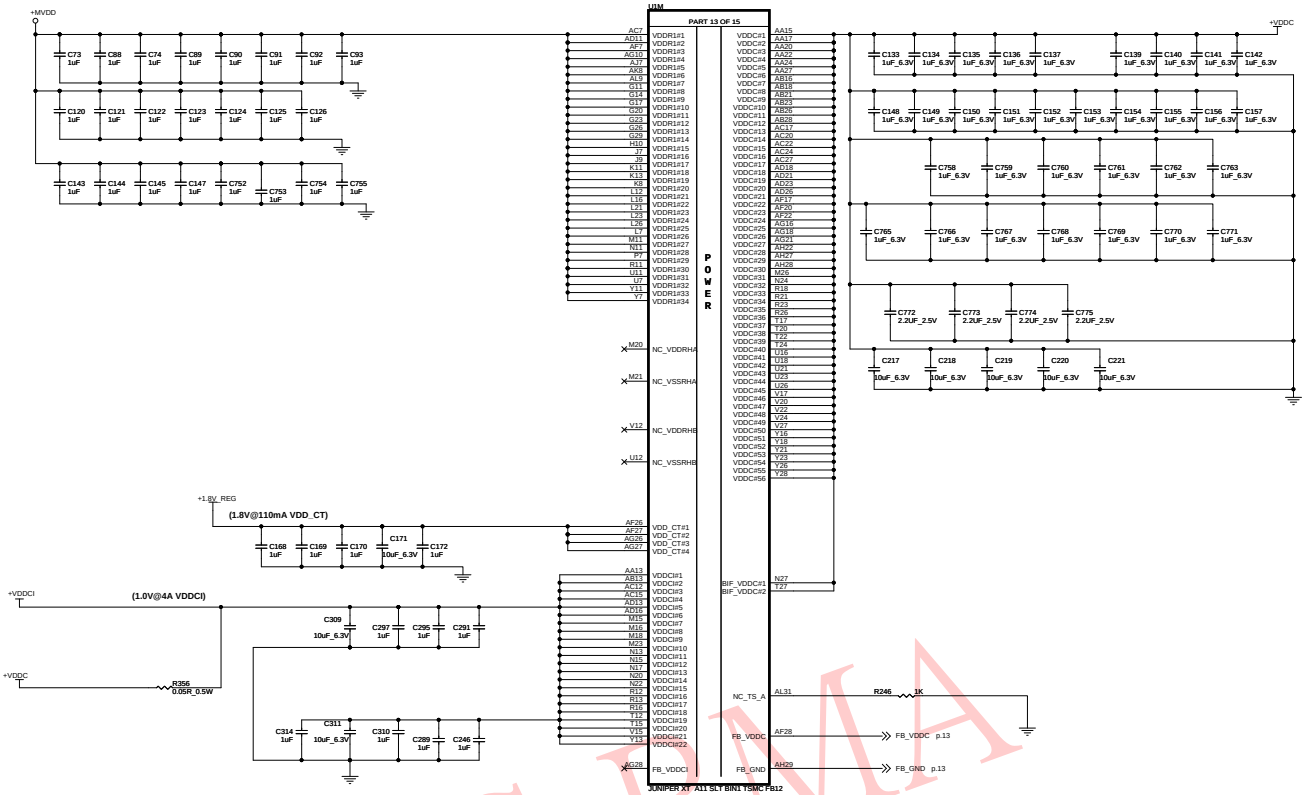

MSIS-RMA
吳婷
20100726

CONFIDENTIAL & PROPRIETARY TO ADVANCED MICRO DEVICES INC.
© 2007 Advanced Micro Devices
This AMD Board schematic and design is the exclusive property of AMD, and is provided only to entities under a non-disclosure agreement with AMD for evaluation purposes. Further distribution or disclosure is strictly prohibited. Use of this schematic and design for any purpose other than evaluation requires a Board Technology License Agreement with AMD. AMD makes no representations or warranties of any kind regarding this schematic and design, including, not limited to, any implied warranty of merchantibility or fitness for a particular purpose, and disclaims responsibility foany consequences resulting from use of the information included herein.

Advanced Micro Devices Inc.
1 Commerce Valley Drive East
Markham, Ontario

Date:	Monday, April 26, 2010
Rev	1
Sheet	5 of 16
Title	RH Redwood/ Broadway M2 package MXM3.0 DDR3
Doc No.	105-C110XX-00

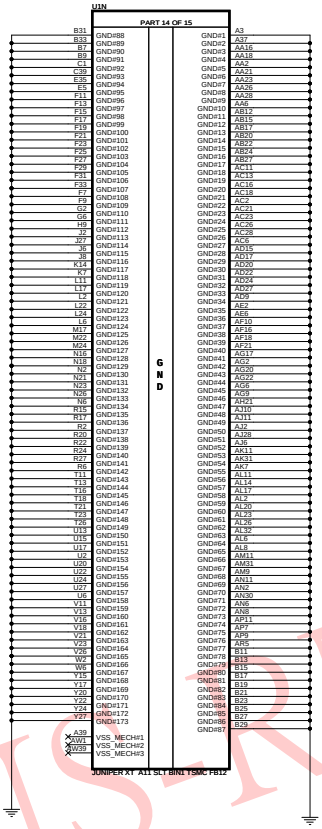

MSI-RMA
吳婷
20100726

CONFIDENTIAL & PROPRIETARY TO ADVANCED MICRO DEVICES INC
© 2007 Advanced Micro Devices
This AMD Board schematic and design is the exclusive property of AMD, and is provided only to entities under a non-disclosure agreement with AMD for evaluation purposes. Further distribution or disclosure is strictly prohibited. Use of this schematic and design for any purpose other than evaluation requires a Board Technology License Agreement with AMD. AMD makes no representations or warranties of any kind regarding this schematic and design, including, not limited to, any implied warranty of merchantibility or fitness for a particular purpose, and disclaims responsibility foany consequences resulting from use of the information included herein.

Advanced Micro Devices Inc.
1 Commerce Valley Drive East
Markham, Ontario

Date:	Monday, April 26, 2010
Rev	1
Sheet	6 of 16
Title	RH Redwood/ Broadway M2 package MXM3.0 DDR3
Doc No.	105-C110XX-00

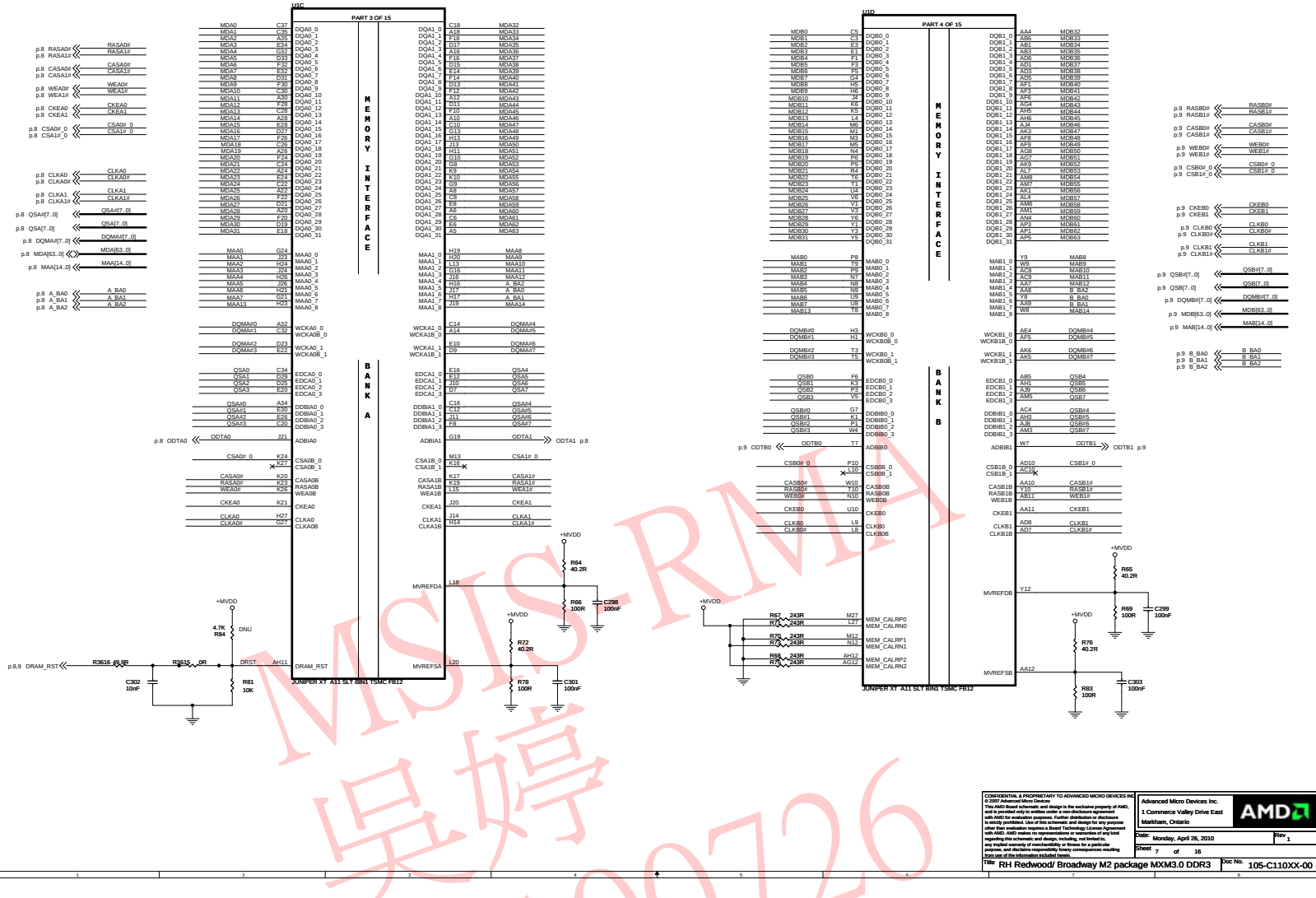

MSI-RMA
吳婷
20100726

CONFIDENTIAL & PROPRIETARY TO ADVANCED MICRO DEVICES INC.
© 2007 Advanced Micro Devices
This AMD Board schematic and design is the exclusive property of AMD, and is provided only to entities under a non-disclosure agreement with AMD for evaluation purposes. Further distribution or disclosure is strictly prohibited. Use of this schematic and design for any purpose other than evaluation requires a Board Technology License Agreement with AMD. AMD makes no representations or warranties of any kind regarding this schematic and design, including, not limited to, any implied warranty of merchantability or fitness for a particular purpose, and disclaims responsibility forany consequences resulting from use of the information included herein.

Advanced Micro Devices Inc.
1 Commerce Valley Drive East
Markham, Ontario

Date:	Monday, April 26, 2010
Rev	1
Sheet	7 of 16
Title	RH Redwood/ Broadway M2 package MXM3.0 DDR3
Doc No.	105-C110XX-00

CHANNEL A: 256MB/512MB DDR3

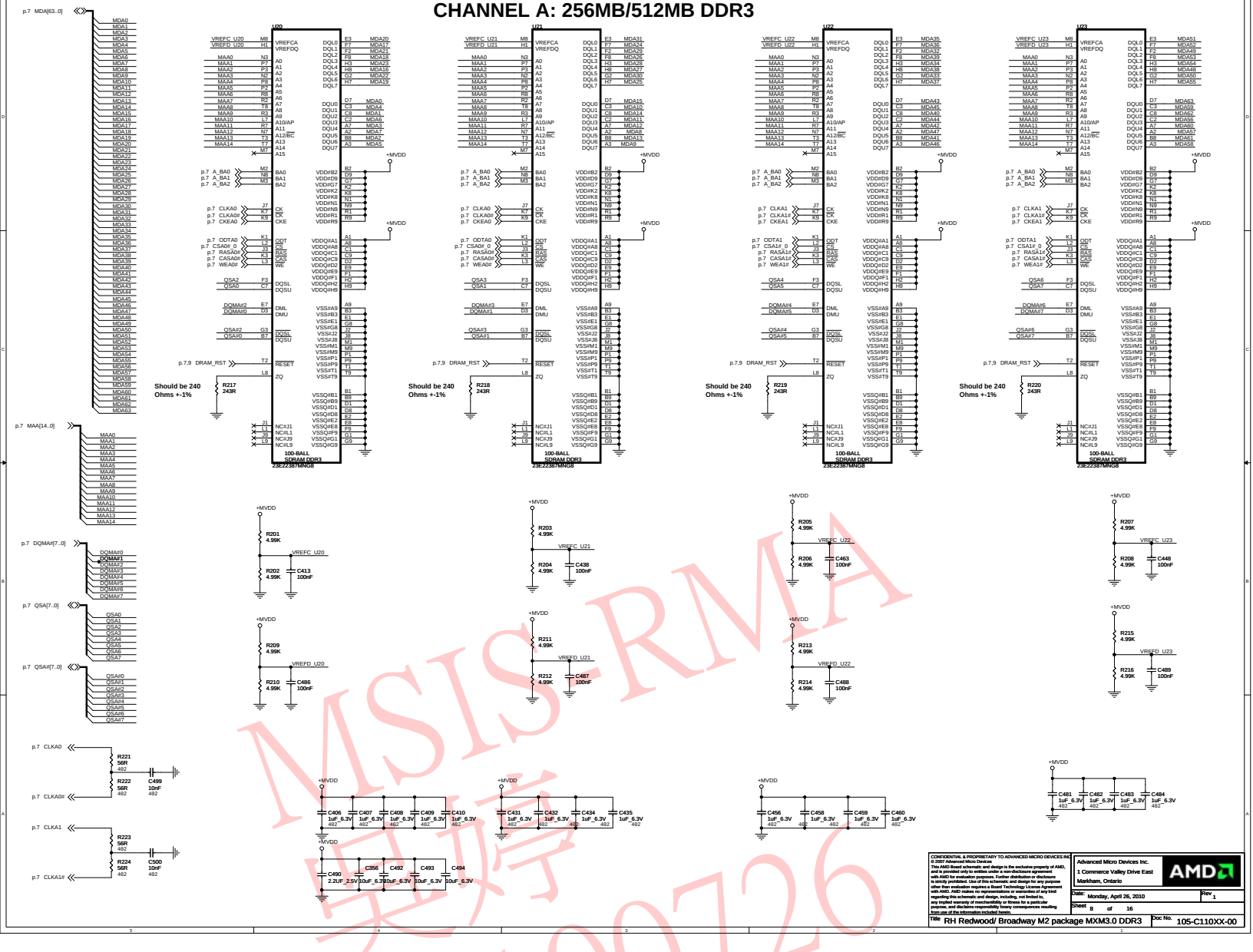

MSIS-RMA
吴婷
20100726

CONFIDENTIAL & PROPRIETARY TO ADVANCED MICRO DEVICES INC
© 2007 Advanced Micro Devices
This AMD Board schematic and design is the exclusive property of AMD, and is provided only to entities under a non-disclosure agreement with AMD for evaluation purposes. Further distribution or disclosure is strictly prohibited. Use of this schematic and design for any purpose other than evaluation requires a Board Technology License Agreement with AMD. AMD makes no representations or warranties of any kind regarding this schematic and design, including, not limited to, any implied warranty of merchantability or fitness for a particular purpose, and disclaims responsibility for any consequences resulting from use of the information included herein.

Advanced Micro Devices Inc.
1 Commerce Valley Drive East
Markham, Ontario

AMD

Date: Monday, April 26, 2010
Rev 1
Sheet 8 of 16
Title RH Redwood/ Broadway M2 package MXM3.0 DDR3
Doc No. 105-C110XX-00

CHANNEL B: 256MB/512MB DDR3

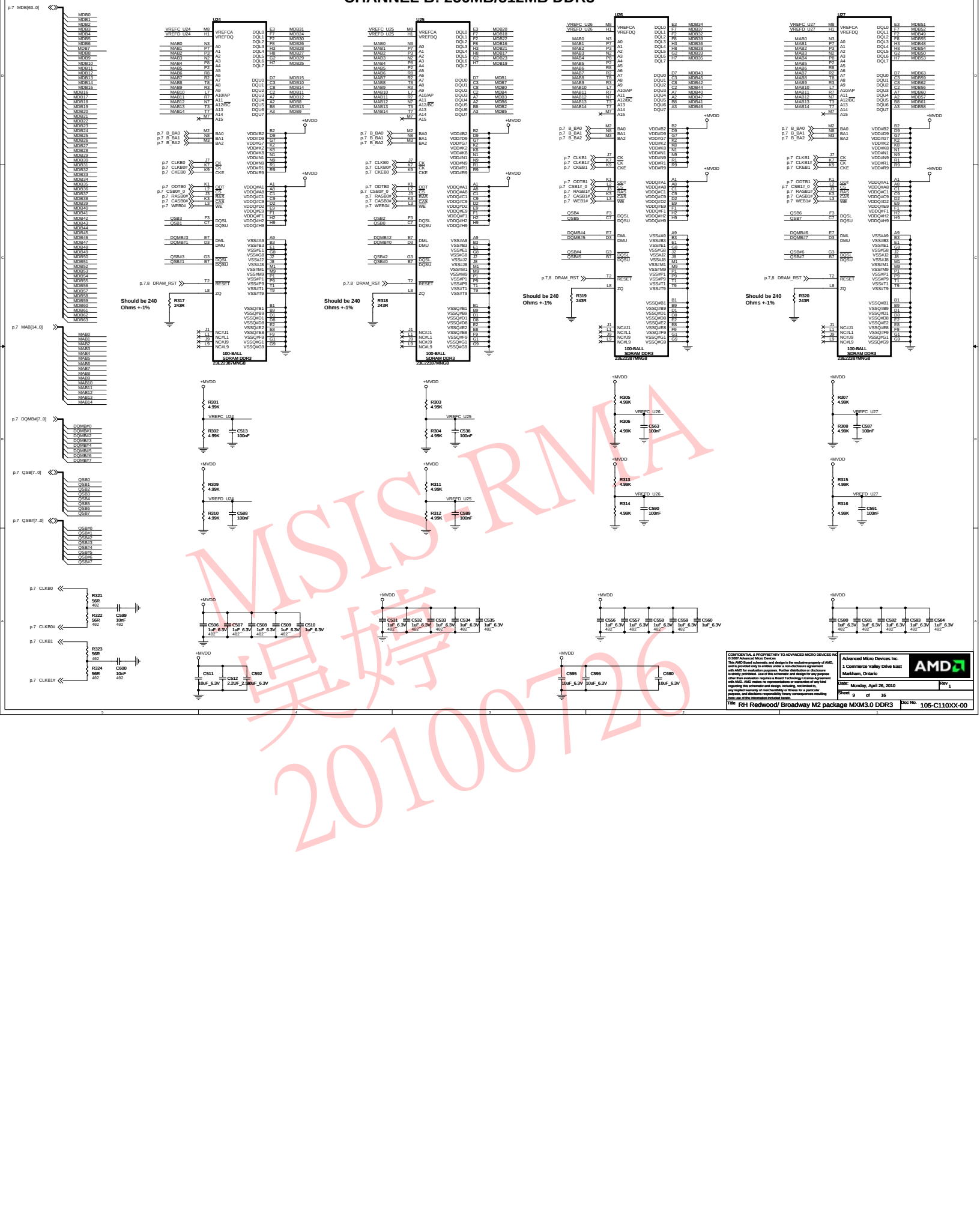

MSIS-RMA
吴婷
20100726

CONFIDENTIAL & PROPRIETARY TO ADVANCED MICRO DEVICES INC.
© 2007 Advanced Micro Devices
This AMD Board schematic and design is the exclusive property of AMD, and is provided only to entities under a non-disclosure agreement with AMD for evaluation purposes. Further distribution or disclosure is strictly prohibited. Use of this schematic and design for any purpose other than evaluation requires a Board Technology License Agreement with AMD. AMD makes no representations or warranties of any kind regarding this schematic and design, including, not limited to, any implied warranty of merchantability or fitness for a particular purpose, and disclaims responsibility foany consequences resulting from use of the information included herein.

Advanced Micro Devices Inc.
1 Commerce Valley Drive East
Markham, Ontario

Date:	Monday, April 26, 2010
Rev	1
Sheet	9 of 16
Title	RH Redwood/ Broadway M2 package MXM3.0 DDR3
Doc No.	105-C110XX-00

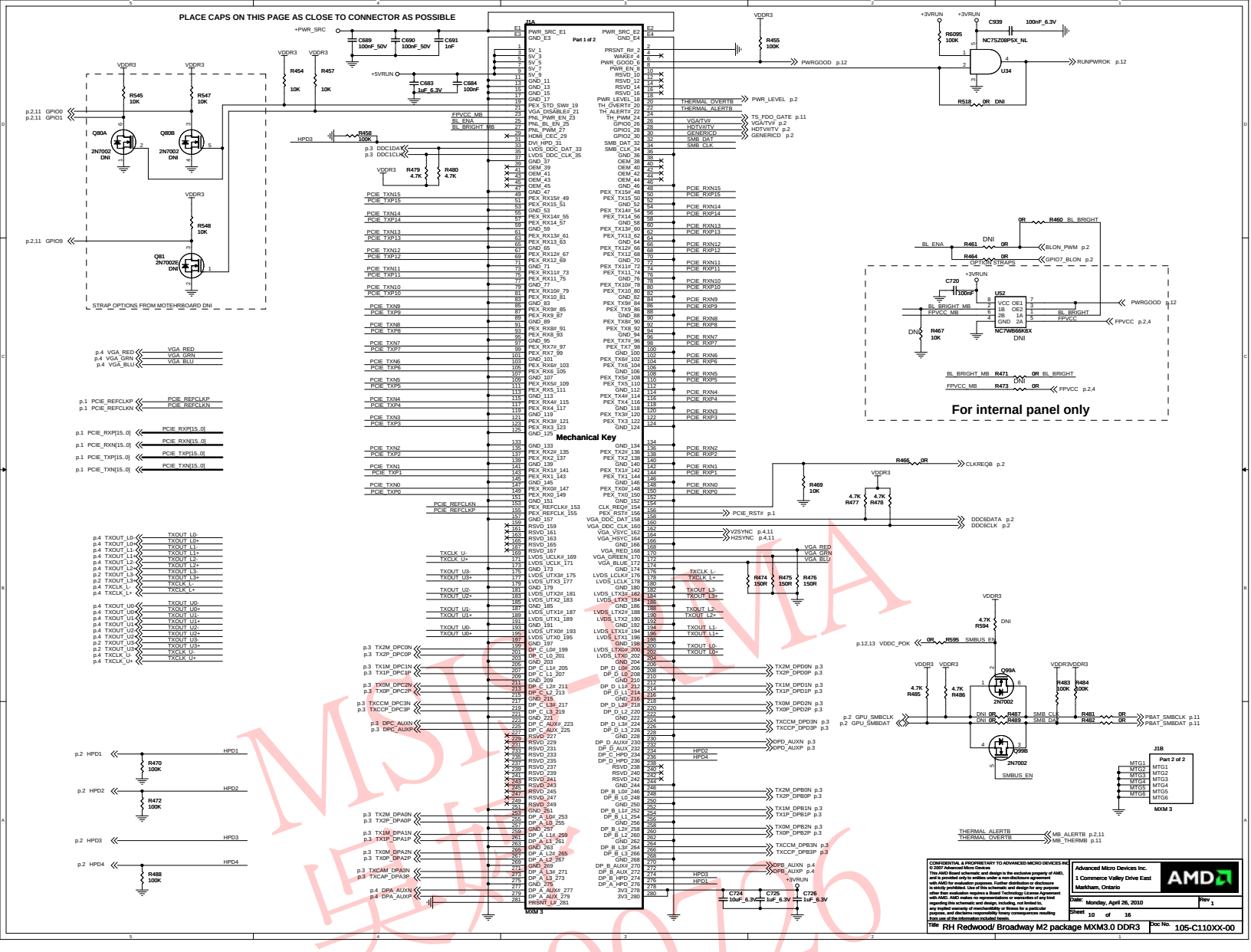

MSI-RMA 20100726

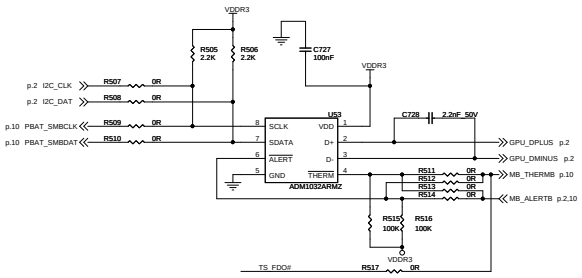

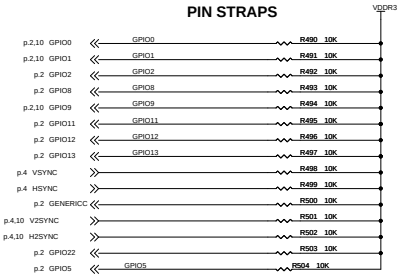

CONFIGURATION STRAPS

ALLOW FOR PULLUP PADS FOR THESE STRAPS AND IF THESE GPIOS ARE USED, THEY MUST NOT CONFLICT DURING RESET

RECOMMENDED SETTINGS
0= DO NOT INSTALL RESISTOR
1 = INSTALL 10K RESISTOR
X = DESIGN DEPENDANT
NA = NOT APPLICABLE

STRAPS	PIN	DESCRIPTION OF DEFAULT SETTINGS	
TX_PWRS_ENB	GPIO0	PCIE FULL TX OUTPUT SWING	1
TX_DEEMPH_EN	GPIO1	PCIE TRANSMITTER DE-EMPHASIS ENABLED	1
BIF_GEN2_EN_A	GPIO2	PCIE GNE2 ENABLED	1
BIF_CLK_PM_EN	GPIO8	BIF_CLK_PM_EN	0
BIF_VGA DIS	GPIO9	VGA ENABLED	0
BIF_RX_PLL_CALIB_BP	GPIO21	BIF_RX_PLL_CALIB_BP	0
BIOS_ROM_EN	GPIO_22_ROMCSB	ENABLE EXTERNAL BIOS ROM	1
ROMIDCFG(2:0)	GPIO[13:11]	SERIAL ROM TYPE OR MEMORY APERTURE SIZE SELECT	X X X
VIP_DEVICE_STRAP_ENA	V2SYNC	IGNORE VIP DEVICE STRAPS	0
SMS_EN_HARD	H2SYNC		0
CCBYPASS	GENERICC		0
AUD[1]	HSYNC	built-in HDMI connector	1
AUD[0]	VSYNC	Audio functiuon present	1
MEMORY CINFIG	[GPIO5,GPIO16]		
HYNIX	[0:1]		
SAMSUNG	[1:0]		

AMD RESERVED CONFIGURATION STRAPS

ALLOW FOR PULLUP PADS FOR THESE STRAPS AND IF THESE GPIOS ARE USED, THEY MUST NOT CONFLICT DURING RESET

H2SYNC GENERICC

PULLUP PADS ARE NOT REQUIRED FOR THESE STRAPS BUT IF THESE GPIOS ARE USED, THEY MUST NOT CONFLICT DURING RESET

GPIO_28_TDO GPIO21_BB_EN

If Critical Temperature is reached this will force the fan to run at full speed while power is removed from GPU & rest of the board.
This is an open collector signal. Active level is hard pull down to ground.

Critial Temperature Fault

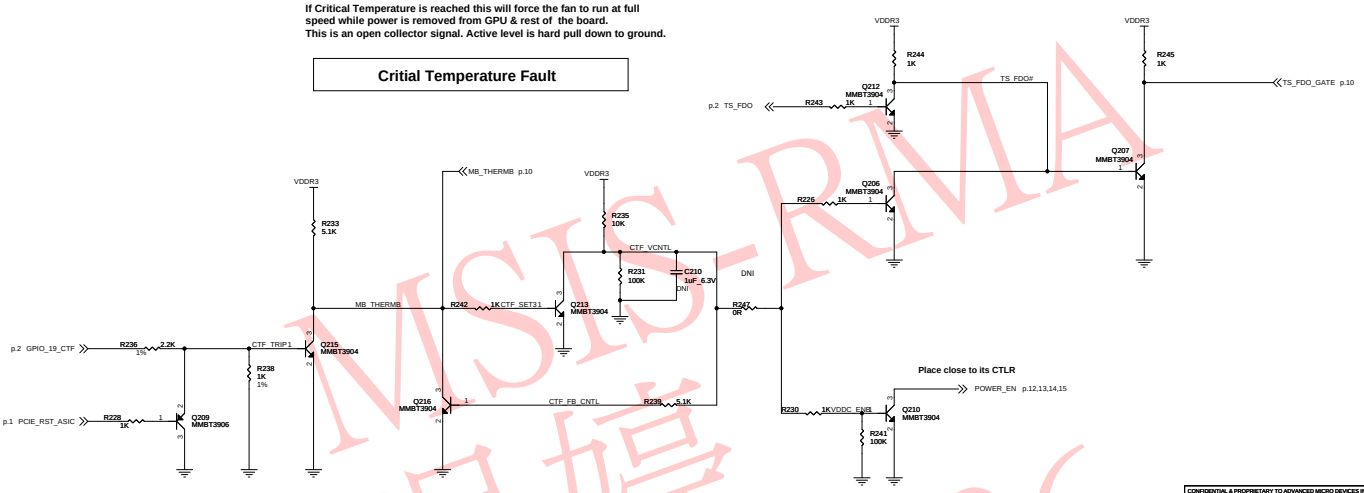

MSIC-RMA
吳婷
20100726

CONFIDENTIAL & PROPRIETARY TO ADVANCED MICRO DEVICES INC.
© 2007 Advanced Micro Devices
This AMD Board schematic and design is the exclusive property of AMD, and is provided only to entities under a non-disclosure agreement with AMD for evaluation purposes. Further distribution or disclosure is strictly prohibited. Use of this schematic and design for any purpose other than evaluation requires a Board Technology License Agreement with AMD. AMD makes no representations or warranties of any kind regarding this schematic and design, including, not limited to, any implied warranty of merchantibility or fitness for a particular purpose, and disclaims responsibility forany consequences resulting from use of the information included herein.

Advanced Micro Devices Inc.
1 Commerce Valley Drive East
Markham, Ontario

Date:	Monday, April 26, 2010
Rev	1
Sheet	11 of 16
Title	RH Redwood/ Broadway M2 package MXM3.0 DDR3
Doc No.	105-C110XX-00

LDO #1: Vin = 3.00V to 3.60V (3.3V +/- 9%) Vout = +1.8V +/- 2%; Iout = 0.8A (TBV) RMS MAX
PCB: 50 to 70mm sq. copper area for cooling

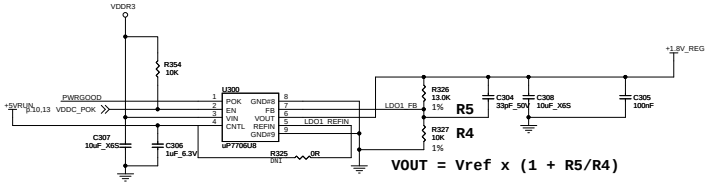

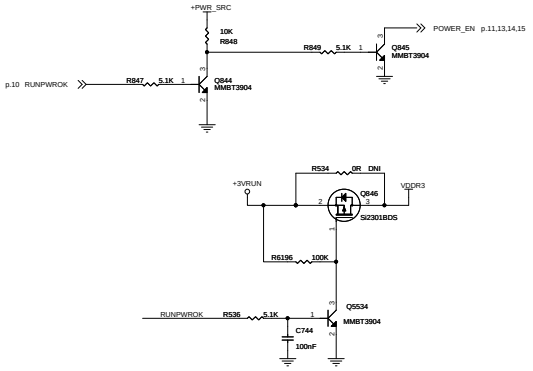

LDO #2: Vin = +1.32V to 1.84VMAX Vout = +1.0V +/- 2% Iout = 1.7A (TBV) RMS MAX
PCB: 50 to 70mm sq. copper area for cooling

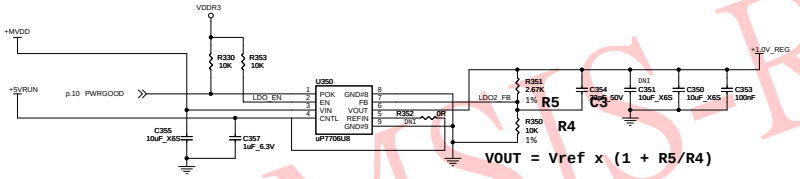

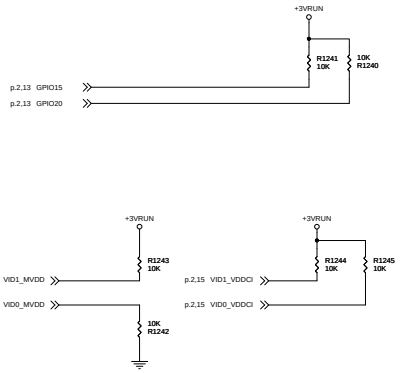

CONFIDENTIAL & PROPRIETARY TO ADVANCED MICRO DEVICES INC.
© 2007 Advanced Micro Devices
This AMD Board schematic and design is the exclusive property of AMD, and is provided only to entities under a non-disclosure agreement with AMD for evaluation purposes. Further distribution or disclosure is strictly prohibited. Use of this schematic and design for any purpose other than evaluation requires a Board Technology License Agreement with AMD. AMD makes no representations or warranties of any kind regarding this schematic and design, including, not limited to, any implied warranty of merchantibility or fitness for a particular purpose, and disclaims responsibility forany consequences resulting from use of the information included herein.

Advanced Micro Devices Inc.
1 Commerce Valley Drive East
Markham, Ontario

Date:	Monday, April 26, 2010
Rev	1
Sheet	12 of 16
Title	RH Redwood/ Broadway M2 package MXM3.0 DDR3
Doc No.	105-C110XX-00

MSTS-RMA
吴婷
20100726

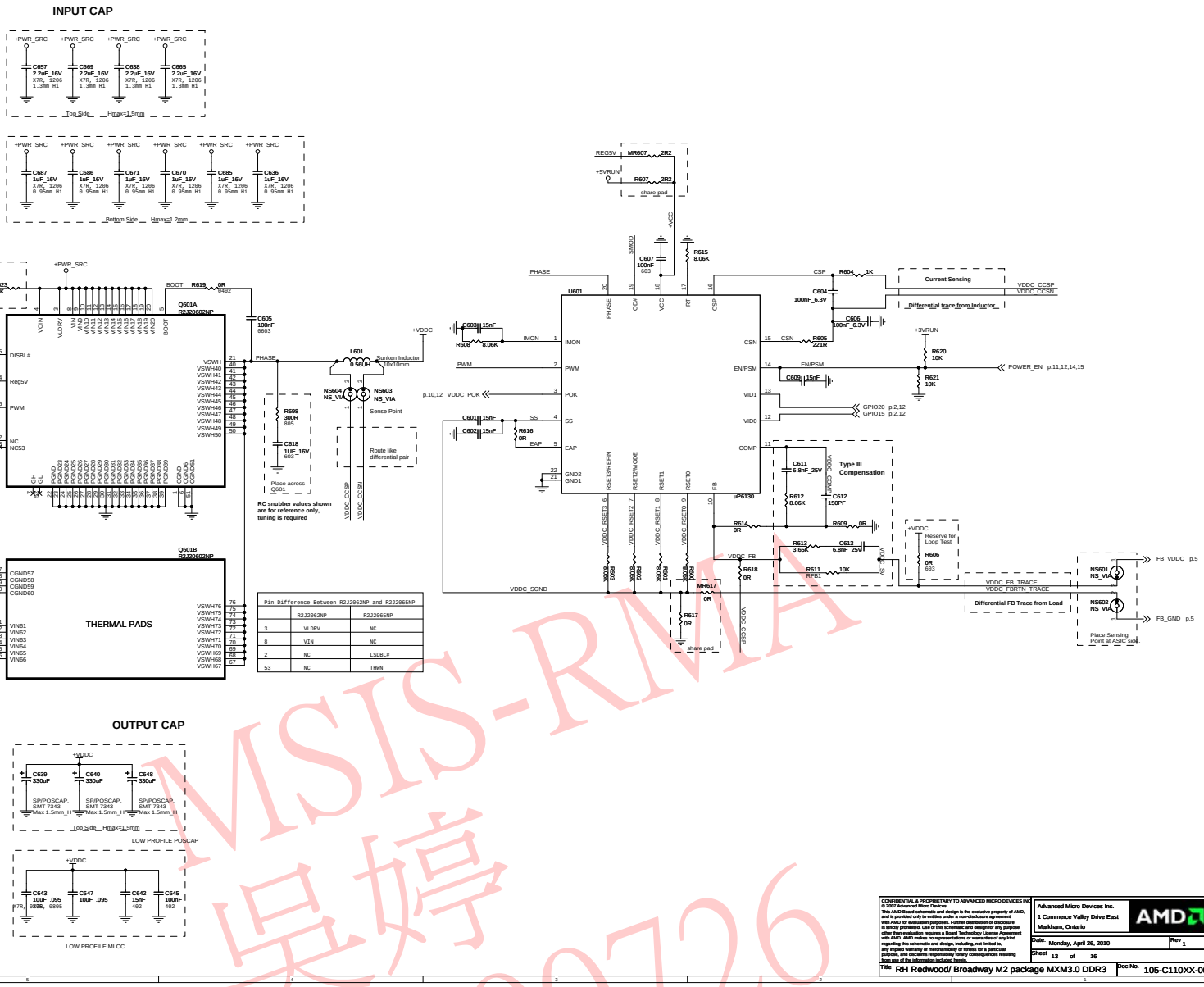

MSIS-RMA
吴婷
20100726

CONFIDENTIAL & PROPRIETARY TO ADVANCED MICRO DEVICES INC.
© 2007 Advanced Micro Devices
This AMD Board schematic and design is the exclusive property of AMD, and is provided only to entities under a non-disclosure agreement with AMD for evaluation purposes. Further distribution or disclosure is strictly prohibited. Use of this schematic and design for any purpose other than evaluation requires a Board Technology License Agreement with AMD. AMD makes no representations or warranties of any kind regarding this schematic and design, including, not limited to, any implied warranty of merchantibility or fitness for a particular purpose, and disclaims responsibility forany consequences resulting from use of the information included herein.

Advanced Micro Devices Inc.
1 Commerce Valley Drive East
Markham, Ontario

Date:	Monday, April 26, 2010
Rev	1
Sheet	13 of 16
Title	RH Redwood/ Broadway M2 package MXM3.0 DDR3
Doc No.	105-C110XX-00

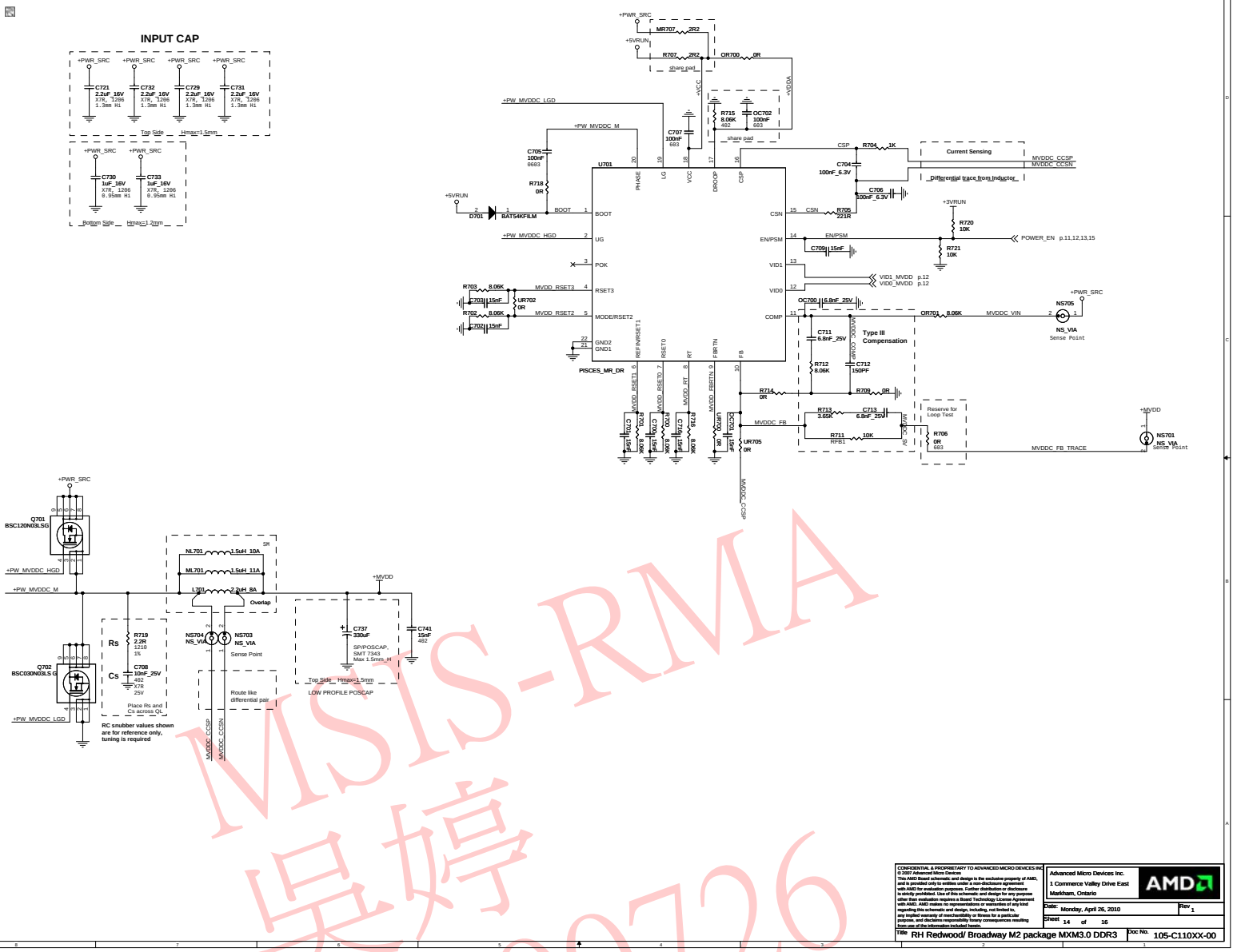

MSIS-RMA
吴婷
20100726

CONFIDENTIAL & PROPRIETARY TO ADVANCED MICRO DEVICES INC
© 2007 Advanced Micro Devices
This AMD Board schematic and design is the exclusive property of AMD, and is provided only to entities under a non-disclosure agreement with AMD for evaluation purposes. Further distribution or disclosure is strictly prohibited. Use of this schematic and design for any purpose other than evaluation requires a Board Technology License Agreement with AMD. AMD makes no representations or warranties of any kind regarding this schematic and design, including, not limited to, any implied warranty of merchantibility or fitness for a particular purpose, and disclaims responsibility foany consequences resulting from use of the information included herein.

Advanced Micro Devices Inc.
1 Commerce Valley Drive East
Markham, Ontario

Date:	Monday, April 26, 2010
Rev	1
Sheet	14 of 16
Title	RH Redwood/ Broadway M2 package MXM3.0 DDR3
Doc No.	105-C110XX-00

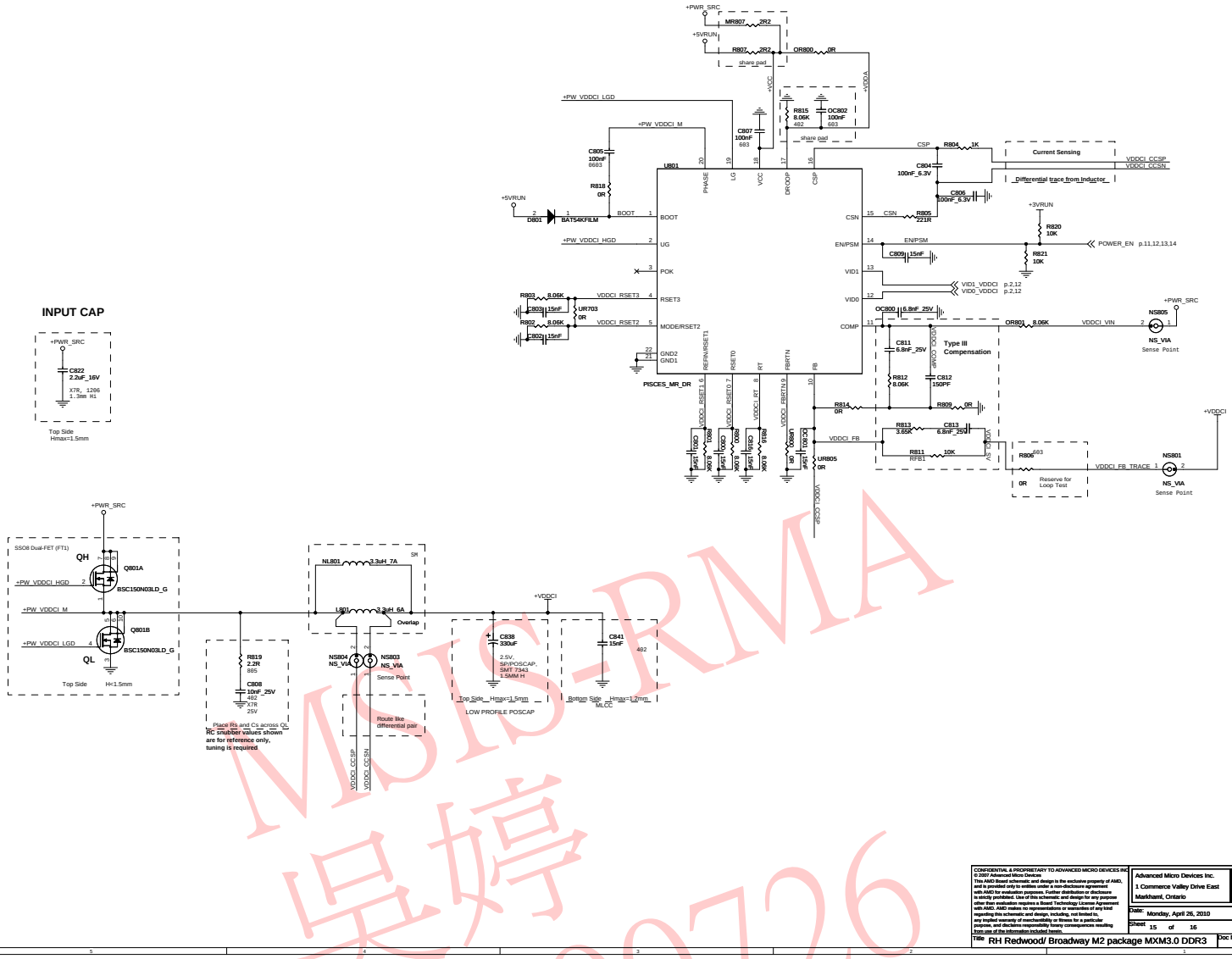

MSIS-RMA
吴婷
20100726

CONFIDENTIAL & PROPRIETARY TO ADVANCED MICRO DEVICES INC.
© 2007 Advanced Micro Devices
This AMD Board schematic and design is the exclusive property of AMD, and is provided only to entities under a non-disclosure agreement with AMD for evaluation purposes. Further distribution or disclosure is strictly prohibited. Use of this schematic and design for any purpose other than evaluation requires a Board Technology License Agreement with AMD. AMD makes no representations or warranties of any kind regarding this schematic and design, including, not limited to, any implied warranty of merchantibility or fitness for a particular purpose, and disclaims responsibility forany consequences resulting from use of the information included herein.

Advanced Micro Devices Inc.
1 Commerce Valley Drive East
Markham, Ontario

Date: Monday, April 26, 2010
Rev 1
Sheet 15 of 16
Title RH Redwood/ Broadway M2 package MXM3.0 DDR3
Doc No. 105-C110XX-00

Title	Schematic No.	Date:
RH Redwood/ Broadway M2 package MXM3.0 DDR3	105-C110XX-00	Monday, April 26, 2010

REVISION HISTORY

NOTE: This schematic represents the PCB, it does not represent any specific SKU.
For Stuffing options (component values, DNI's, ...) please consult the product specific BOM.
Please contact AMD representative to obtain latest BOM closest to the application desired.

Rev 1

Sch Rev	PCB Rev	Date	REVISION DESCRIPTION
0	00A	03/03/10	Create new SCHs based on C07601
1	00	04/27/10	Add pull-down resistor R427 and remove ML801

MSIS-RMA
吳婷
20100726