P690: GT218, DDR3 MEMORY 64MX16/32MX16

Page 1: P690 Overview

Page 2: PCI Express Interface

Page 3: Frame Buffer Interface

Page 4: DDR3 Memories

Page 5: DAC A Slim VGA

Page 6: DAC B VGA Header

Page 7: TMDS Interface

Page 8: DisplayPort Connector

Page 9: IFPC, IFPE Interface, Fan, Mechanical

Page 10: XTAL, ROM, SPDIF, JTAG

Page 11: Thermal Protection, IFP_IOVDD, Straps

Page 12: Power Supply I: FBVDD/Q, PEX_VDD, 5V, 3V3_F

Page 13: Power Supply II: PLLVDD, NVVDD

V183 2.0 pcb change list

Page 2：Add EC1802 for 12V_PEX use , G1.E15 pin NC

Page 3：Add R72

Page 5：ESD diose move to close connector side

Page 7：Add EMI suggestion

Page 8：Add HDMI function

Page 8：G1.H6 pin connector to GND

Page 9：G1.P6 D7 pin connector to GND

Page 10：Del JTAG、I2C SCH, U503 pin 3 connector to ROM_VCC

Page 12：Change FBVDDQ PWM sch , Add C99 for 3V3_PEX

Page 12：Change PEX_VDD、5V

Page 13：Change NVVDD PWM sch

Page 13：Del PEX_PLL sch

V183 2.3 pcb change list

Page 8：HDMI change to Link C

Page 13：Reserve GPIO 5 GPIO 6 sch

MSIS-RMA
羅覺林
20091201

SKU	VARIANT	NVPN	ASSEMBLY
B	BASE	600-10690-BASE-000	BASE LEVEL GENERIC SCHEMATIC ONLY, COMMON & NO_STUFF ASSEMBLY NOTES AND BOM NOT FINAL
1	SKU0000	600-10690-0000-000	GT218-300, 550/1375/800, 512MB/64bit, 64Mx16 DDR3, DVI-DL+DP+VGA, DT
2	<UNDEFINED>	<UNDEFINED>	<UNDEFINED>
3	<UNDEFINED>	<UNDEFINED>	<UNDEFINED>
4	<UNDEFINED>	<UNDEFINED>	<UNDEFINED>
5	<UNDEFINED>	<UNDEFINED>	<UNDEFINED>
6	<UNDEFINED>	<UNDEFINED>	<UNDEFINED>
7	<UNDEFINED>	<UNDEFINED>	<UNDEFINED>
8	<UNDEFINED>	<UNDEFINED>	<UNDEFINED>
9	<UNDEFINED>	<UNDEFINED>	<UNDEFINED>
10	<UNDEFINED>	<UNDEFINED>	<UNDEFINED>
11	<UNDEFINED>	<UNDEFINED>	<UNDEFINED>
12	<UNDEFINED>	<UNDEFINED>	<UNDEFINED>
13	<UNDEFINED>	<UNDEFINED>	<UNDEFINED>
14	<UNDEFINED>	<UNDEFINED>	<UNDEFINED>
15	<UNDEFINED>	<UNDEFINED>	<UNDEFINED>

ASSEMBLY	BASE LEVEL GENERIC SCHEMATIC ONLY, COMMON & NO_STUFF ASSEMBLY NOTES AND BOM NOT FINAL
PAGE DETAIL	P690 Overview

ALL NVIDIA DESIGN SPECIFICATIONS, REFERENCE SPECIFICATIONS, REFERENCE BOARDS, FILES, DRAWINGS, DIAGNOSTICS, LISTS AND OTHER DOCUMENTS OR INFORMATION (TOGETHER AND SEPARATELY, 'MATERIALS') ARE BEING PROVIDED 'AS IS'. THE MATERIALS MAY CONTAIN KNOWN AND UNKNOWN VIOLATIONS OR DEVIATIONS OF INDUSTRY STANDARDS AND SPECIFICATIONS. NVIDIA MAKES NO WARRANTIES, EXPRESSED, IMPLIED, STATUTORY OR OTHERWISE WITH RESPECT TO THE MATERIALS OR OTHERWISE, AND EXPRESSLY DISCLAIMS ALL IMPLIED WARRANTIES INCLUDING, WITHOUT LIMITATION, THE WARRANTIES OF DESIGN, OF NONINFRINGEMENT, MERCHANTABILITY OR FITNESS FOR A PARTICULAR PURPOSE, OR ARISING FROM A COURSE OF DEALING, TRADE USAGE, TRADE PRACTICE, OR INDUSTRY STANDARDS.

NVIDIA CORPORATION
2701 SAN TOMAS EXPRESSWAY
SANTA CLARA, CA 95050, USA

NV_PN	600-10690-BASE-000 A		
ID		PAGE	
NAME		DATE	01-DEC-2008

PCI Express Interface

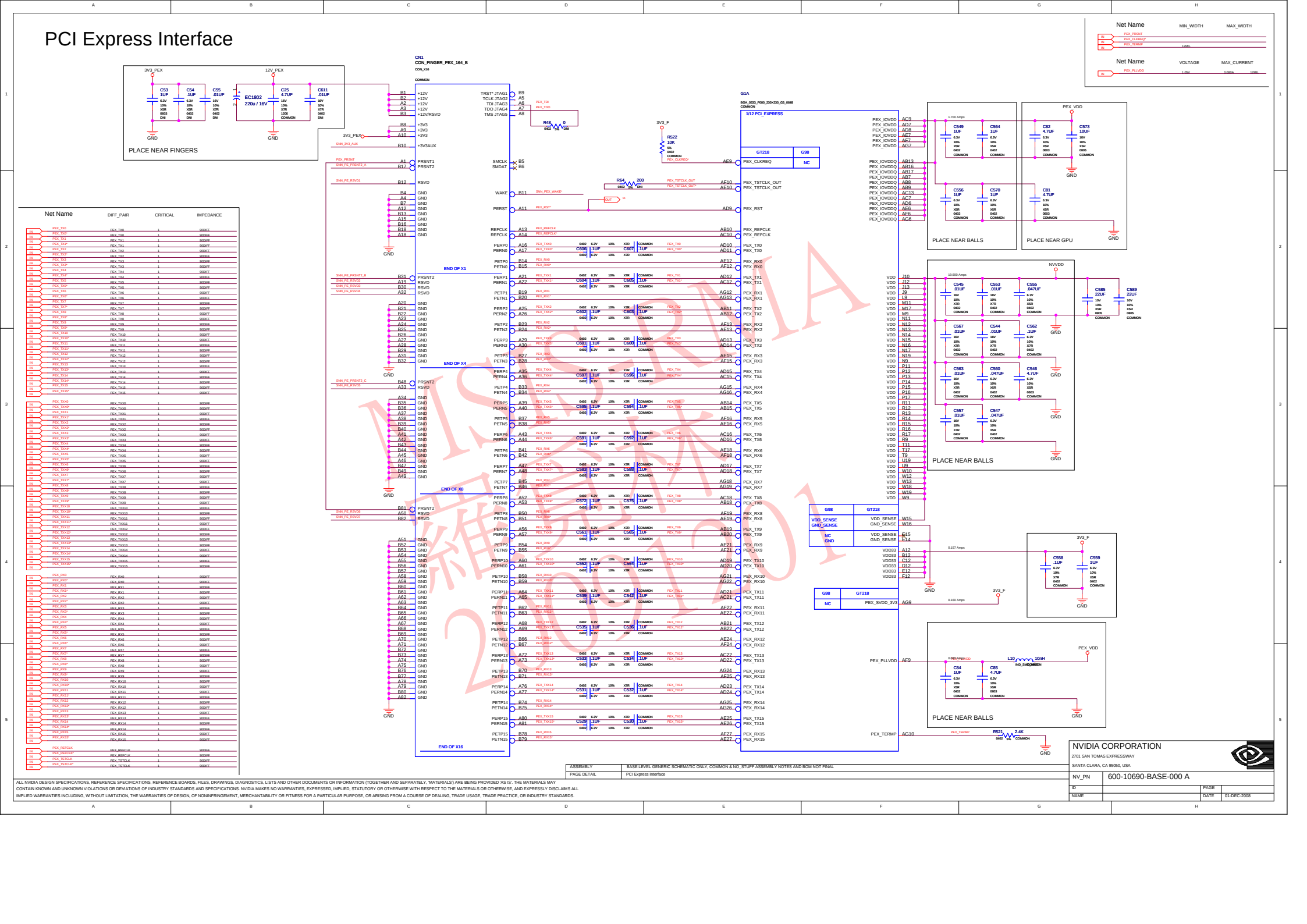

Net Name | DIFF_PAIR | CRITICAL | IMPEDANCE

PEX_TX0 PEX_TX0 1 90OHM
PEX_TX0* PEX_TX0 1 90OHM
PEX_TX1 PEX_TX1 1 90OHM
PEX_TX1* PEX_TX1 1 90OHM
PEX_TX2 PEX_TX2 1 90OHM
PEX_TX2* PEX_TX2 1 90OHM
PEX_TX3 PEX_TX3 1 90OHM
PEX_TX3* PEX_TX3 1 90OHM
PEX_TX4 PEX_TX4 1 90OHM
PEX_TX4* PEX_TX4 1 90OHM
PEX_TX5 PEX_TX5 1 90OHM
PEX_TX5* PEX_TX5 1 90OHM
PEX_TX6 PEX_TX6 1 90OHM
PEX_TX6* PEX_TX6 1 90OHM
PEX_TX7 PEX_TX7 1 90OHM
PEX_TX7* PEX_TX7 1 90OHM
PEX_TX8 PEX_TX8 1 90OHM
PEX_TX8* PEX_TX8 1 90OHM
PEX_TX9 PEX_TX9 1 90OHM
PEX_TX9* PEX_TX9 1 90OHM
PEX_TX10 PEX_TX10 1 90OHM
PEX_TX10* PEX_TX10 1 90OHM
PEX_TX11 PEX_TX11 1 90OHM
PEX_TX11* PEX_TX11 1 90OHM
PEX_TX12 PEX_TX12 1 90OHM
PEX_TX12* PEX_TX12 1 90OHM
PEX_TX13 PEX_TX13 1 90OHM
PEX_TX13* PEX_TX13 1 90OHM
PEX_TX14 PEX_TX14 1 90OHM
PEX_TX14* PEX_TX14 1 90OHM
PEX_TX15 PEX_TX15 1 90OHM
PEX_TX15* PEX_TX15 1 90OHM

PEX_TXX0 PEX_TXX0 1 90OHM
PEX_TXX0* PEX_TXX0 1 90OHM
PEX_TXX1 PEX_TXX1 1 90OHM
PEX_TXX1* PEX_TXX1 1 90OHM
PEX_TXX2 PEX_TXX2 1 90OHM
PEX_TXX2* PEX_TXX2 1 90OHM
PEX_TXX3 PEX_TXX3 1 90OHM
PEX_TXX3* PEX_TXX3 1 90OHM
PEX_TXX4 PEX_TXX4 1 90OHM
PEX_TXX4* PEX_TXX4 1 90OHM
PEX_TXX5 PEX_TXX5 1 90OHM
PEX_TXX5* PEX_TXX5 1 90OHM
PEX_TXX6 PEX_TXX6 1 90OHM
PEX_TXX6* PEX_TXX6 1 90OHM
PEX_TXX7 PEX_TXX7 1 90OHM
PEX_TXX7* PEX_TXX7 1 90OHM
PEX_TXX8 PEX_TXX8 1 90OHM
PEX_TXX8* PEX_TXX8 1 90OHM
PEX_TXX9 PEX_TXX9 1 90OHM
PEX_TXX9* PEX_TXX9 1 90OHM
PEX_TXX10 PEX_TXX10 1 90OHM
PEX_TXX10* PEX_TXX10 1 90OHM
PEX_TXX11 PEX_TXX11 1 90OHM
PEX_TXX11* PEX_TXX11 1 90OHM
PEX_TXX12 PEX_TXX12 1 90OHM
PEX_TXX12* PEX_TXX12 1 90OHM
PEX_TXX13 PEX_TXX13 1 90OHM
PEX_TXX13* PEX_TXX13 1 90OHM
PEX_TXX14 PEX_TXX14 1 90OHM
PEX_TXX14* PEX_TXX14 1 90OHM
PEX_TXX15 PEX_TXX15 1 90OHM
PEX_TXX15* PEX_TXX15 1 90OHM

PEX_RX0 PEX_RX0 1 90OHM
PEX_RX0* PEX_RX0 1 90OHM
PEX_RX1 PEX_RX1 1 90OHM
PEX_RX1* PEX_RX1 1 90OHM
PEX_RX2 PEX_RX2 1 90OHM
PEX_RX2* PEX_RX2 1 90OHM
PEX_RX3 PEX_RX3 1 90OHM
PEX_RX3* PEX_RX3 1 90OHM
PEX_RX4 PEX_RX4 1 90OHM
PEX_RX4* PEX_RX4 1 90OHM
PEX_RX5 PEX_RX5 1 90OHM
PEX_RX5* PEX_RX5 1 90OHM
PEX_RX6 PEX_RX6 1 90OHM
PEX_RX6* PEX_RX6 1 90OHM
PEX_RX7 PEX_RX7 1 90OHM
PEX_RX7* PEX_RX7 1 90OHM
PEX_RX8 PEX_RX8 1 90OHM
PEX_RX8* PEX_RX8 1 90OHM
PEX_RX9 PEX_RX9 1 90OHM
PEX_RX9* PEX_RX9 1 90OHM
PEX_RX10 PEX_RX10 1 90OHM
PEX_RX10* PEX_RX10 1 90OHM
PEX_RX11 PEX_RX11 1 90OHM
PEX_RX11* PEX_RX11 1 90OHM
PEX_RX12 PEX_RX12 1 90OHM
PEX_RX12* PEX_RX12 1 90OHM
PEX_RX13 PEX_RX13 1 90OHM
PEX_RX13* PEX_RX13 1 90OHM
PEX_RX14 PEX_RX14 1 90OHM
PEX_RX14* PEX_RX14 1 90OHM
PEX_RX15 PEX_RX15 1 90OHM
PEX_RX15* PEX_RX15 1 90OHM

PEX_REFCLK PEX_REFCLK 1 90OHM
PEX_REFCLK* PEX_REFCLK 1 90OHM
PEX_TSTCLK PEX_TSTCLK 1 90OHM
PEX_TSTCLK* PEX_TSTCLK 1 90OHM

Net Name | MIN_WIDTH | MAX_WIDTH
PEX_PRSNT
PEX_CLKREQ*
PEX_TERMP
12MIL

Net Name | VOLTAGE | MAX_CURRENT
PEX_PLLVDD 1.05V 0.080A 12MIL

ASSEMBLY	BASE LEVEL GENERIC SCHEMATIC ONLY, COMMON & NO_STUFF ASSEMBLY NOTES AND BOM NOT FINAL
PAGE DETAIL	PCI Express Interface

ALL NVIDIA DESIGN SPECIFICATIONS, REFERENCE SPECIFICATIONS, REFERENCE BOARDS, FILES, DRAWINGS, DIAGNOSTICS, LISTS AND OTHER DOCUMENTS OR INFORMATION (TOGETHER AND SEPARATELY, "MATERIALS") ARE BEING PROVIDED "AS IS". THE MATERIALS MAY CONTAIN KNOWN AND UNKNOWN VIOLATIONS OR DEVIATIONS OF INDUSTRY STANDARDS AND SPECIFICATIONS. NVIDIA MAKES NO WARRANTIES, EXPRESSED, IMPLIED, STATUTORY OR OTHERWISE WITH RESPECT TO THE MATERIALS OR OTHERWISE, AND EXPRESSLY DISCLAIMS ALL IMPLIED WARRANTIES INCLUDING, WITHOUT LIMITATION, THE WARRANTIES OF DESIGN, OF NONINFRINGEMENT, MERCHANTABILITY OR FITNESS FOR A PARTICULAR PURPOSE, OR ARISING FROM A COURSE OF DEALING, TRADE USAGE, TRADE PRACTICE, OR INDUSTRY STANDARDS.

NVIDIA CORPORATION
2701 SAN TOMAS EXPRESSWAY
SANTA CLARA, CA 95050, USA

NV_PN	600-10690-BASE-000 A		
ID		PAGE	
NAME		DATE	01-DEC-2008

NVIDIA CONFIDENTIAL 2008

Frame Buffer Interface

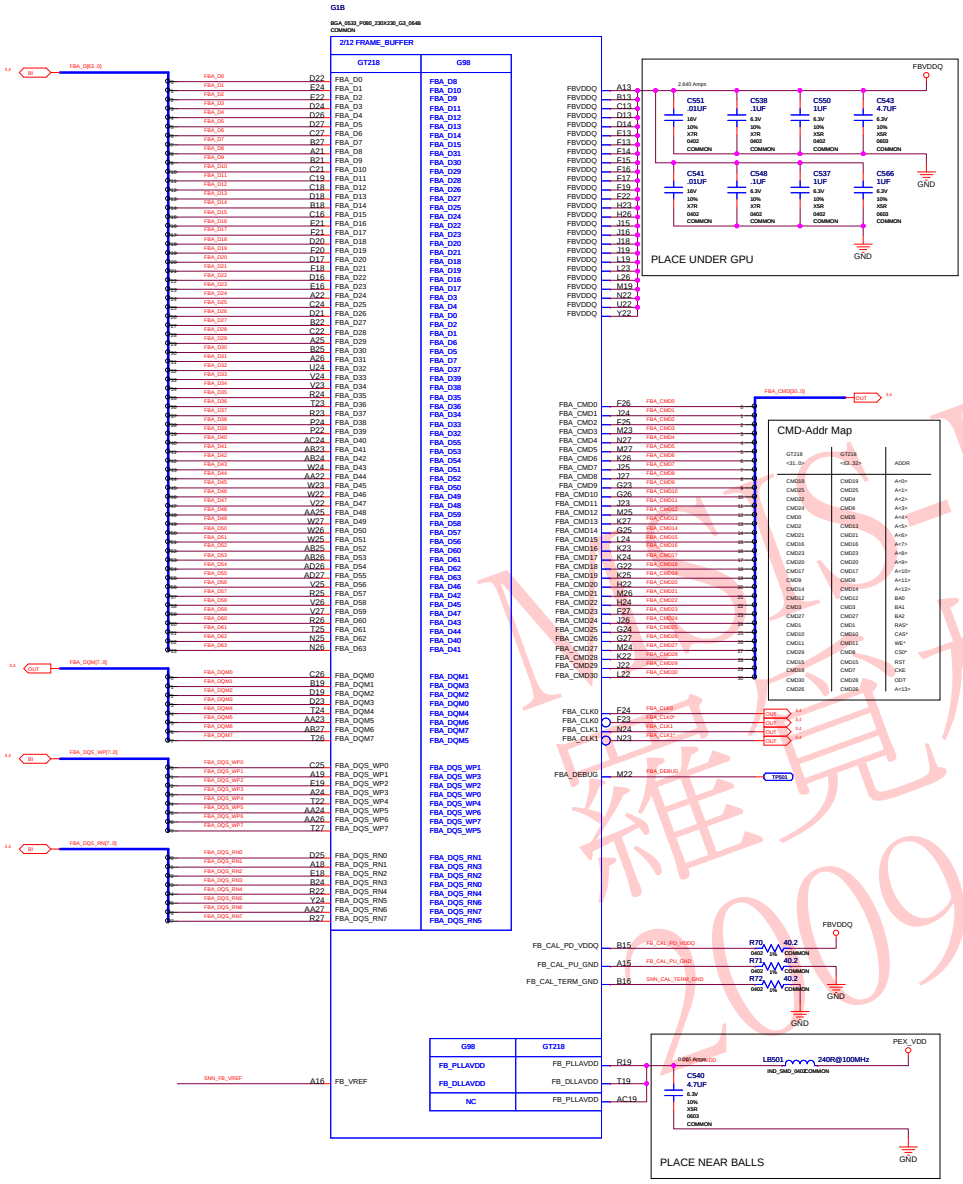

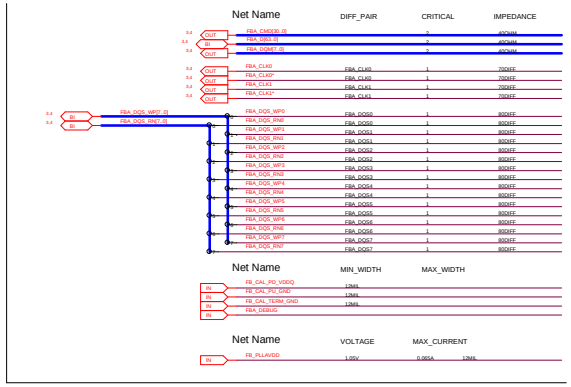

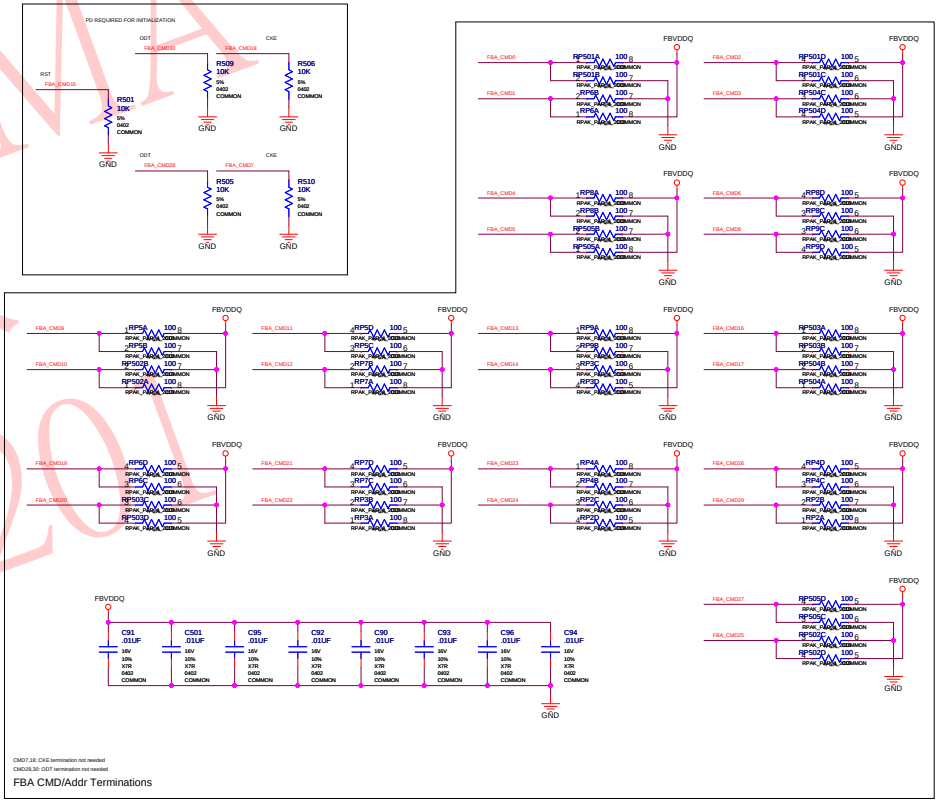

ASSEMBLY	BASE LEVEL GENERIC SCHEMATIC ONLY, COMMON & NO_STUFF ASSEMBLY NOTES AND BOM NOT FINAL
PAGE DETAIL	Frame Buffer Interface

ALL NVIDIA DESIGN SPECIFICATIONS, REFERENCE SPECIFICATIONS, REFERENCE BOARDS, FILES, DRAWINGS, DIAGNOSTICS, LISTS AND OTHER DOCUMENTS OR INFORMATION (TOGETHER AND SEPARATELY, "MATERIALS") ARE BEING PROVIDED 'AS IS'. THE MATERIALS MAY CONTAIN KNOWN AND UNKNOWN VIOLATIONS OR DEVIATIONS OF INDUSTRY STANDARDS AND SPECIFICATIONS. NVIDIA MAKES NO WARRANTIES, EXPRESSED, IMPLIED, STATUTORY OR OTHERWISE WITH RESPECT TO THE MATERIALS OR OTHERWISE, AND EXPRESSLY DISCLAIMS ALL IMPLIED WARRANTIES INCLUDING, WITHOUT LIMITATION, THE WARRANTIES OF DESIGN, OF NONINFRINGEMENT, MERCHANTABILITY OR FITNESS FOR A PARTICULAR PURPOSE, OR ARISING FROM A COURSE OF DEALING, TRADE USAGE, TRADE PRACTICE, OR INDUSTRY STANDARDS.

NVIDIA CORPORATION
2701 SAN TOMAS EXPRESSWAY
SANTA CLARA, CA 95050, USA

NV_PN	600-10690-BASE-000 A		
ID		PAGE	
NAME		DATE	01-DEC-2008

NVIDIA CONFIDENTIAL
20091201

DDR3 Memories

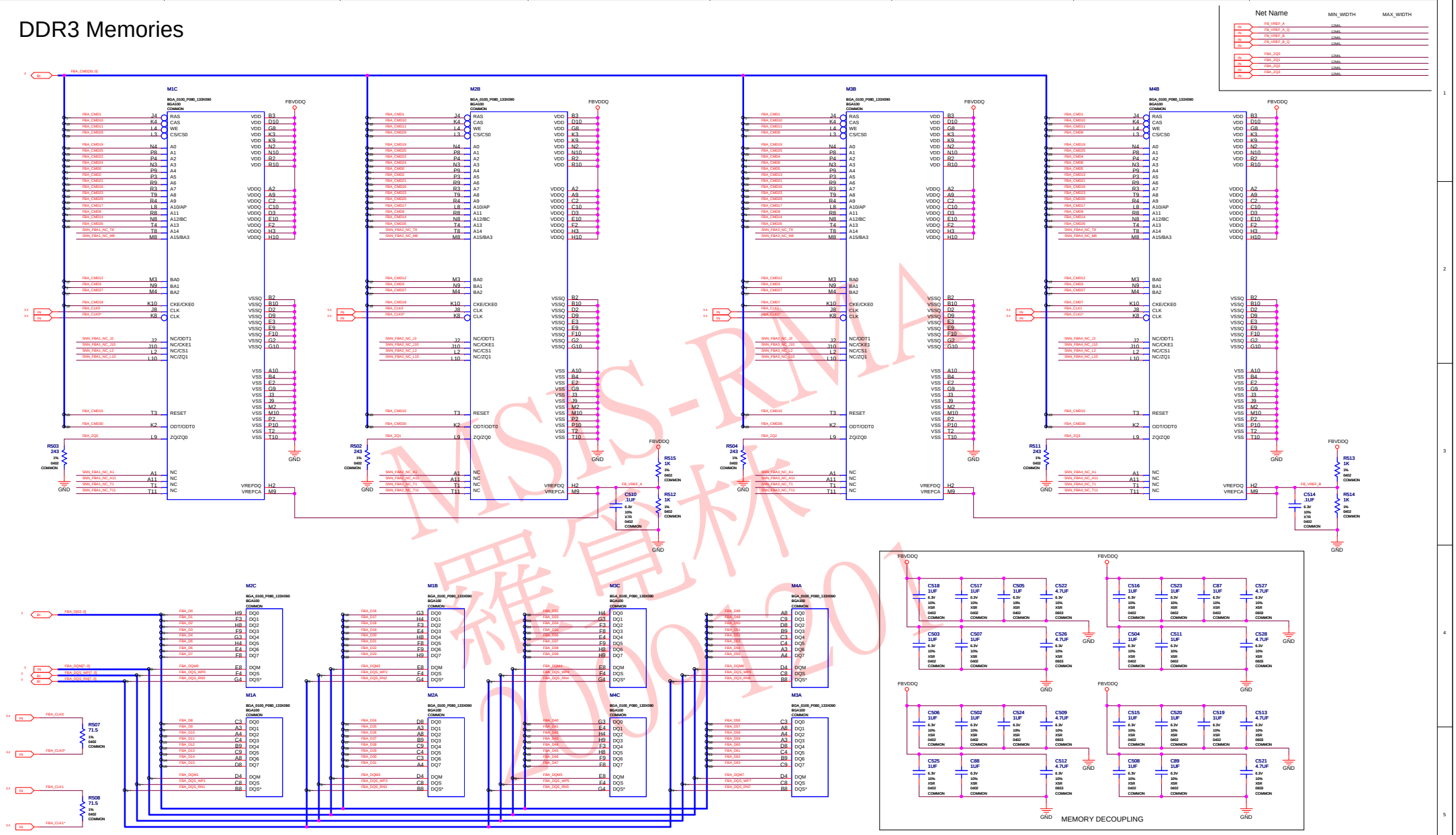

MSIS-RMA 罪宦林 2009.1.20

ASSEMBLY	BASE LEVEL GENERIC SCHEMATIC ONLY, COMMON & NO_STUFF ASSEMBLY NOTES AND BOM NOT FINAL
PAGE DETAIL	DDR3 Memories

NVIDIA CORPORATION
2701 SAN TOMAS EXPRESSWAY
SANTA CLARA, CA 95050, USA

NV_PN	600-10690-BASE-000 A		
ID		PAGE	
NAME		DATE	01-DEC-2008

ALL NVIDIA DESIGN SPECIFICATIONS, REFERENCE SPECIFICATIONS, REFERENCE BOARDS, FILES, DRAWINGS, DIAGNOSTICS, LISTS AND OTHER DOCUMENTS OR INFORMATION (TOGETHER AND SEPARATELY, 'MATERIALS') ARE BEING PROVIDED 'AS IS'. THE MATERIALS MAY CONTAIN KNOWN AND UNKNOWN VIOLATIONS OR DEVIATIONS OF INDUSTRY STANDARDS AND SPECIFICATIONS. NVIDIA MAKES NO WARRANTIES, EXPRESSED, IMPLIED, STATUTORY OR OTHERWISE WITH RESPECT TO THE MATERIALS OR OTHERWISE, AND EXPRESSLY DISCLAIMS ALL IMPLIED WARRANTIES INCLUDING, WITHOUT LIMITATION, THE WARRANTIES OF DESIGN, OF NONINFRINGEMENT, MERCHANTABILITY OR FITNESS FOR A PARTICULAR PURPOSE, OR ARISING FROM A COURSE OF DEALING, TRADE USAGE, TRADE PRACTICE, OR INDUSTRY STANDARDS.

DAC A Slim VGA

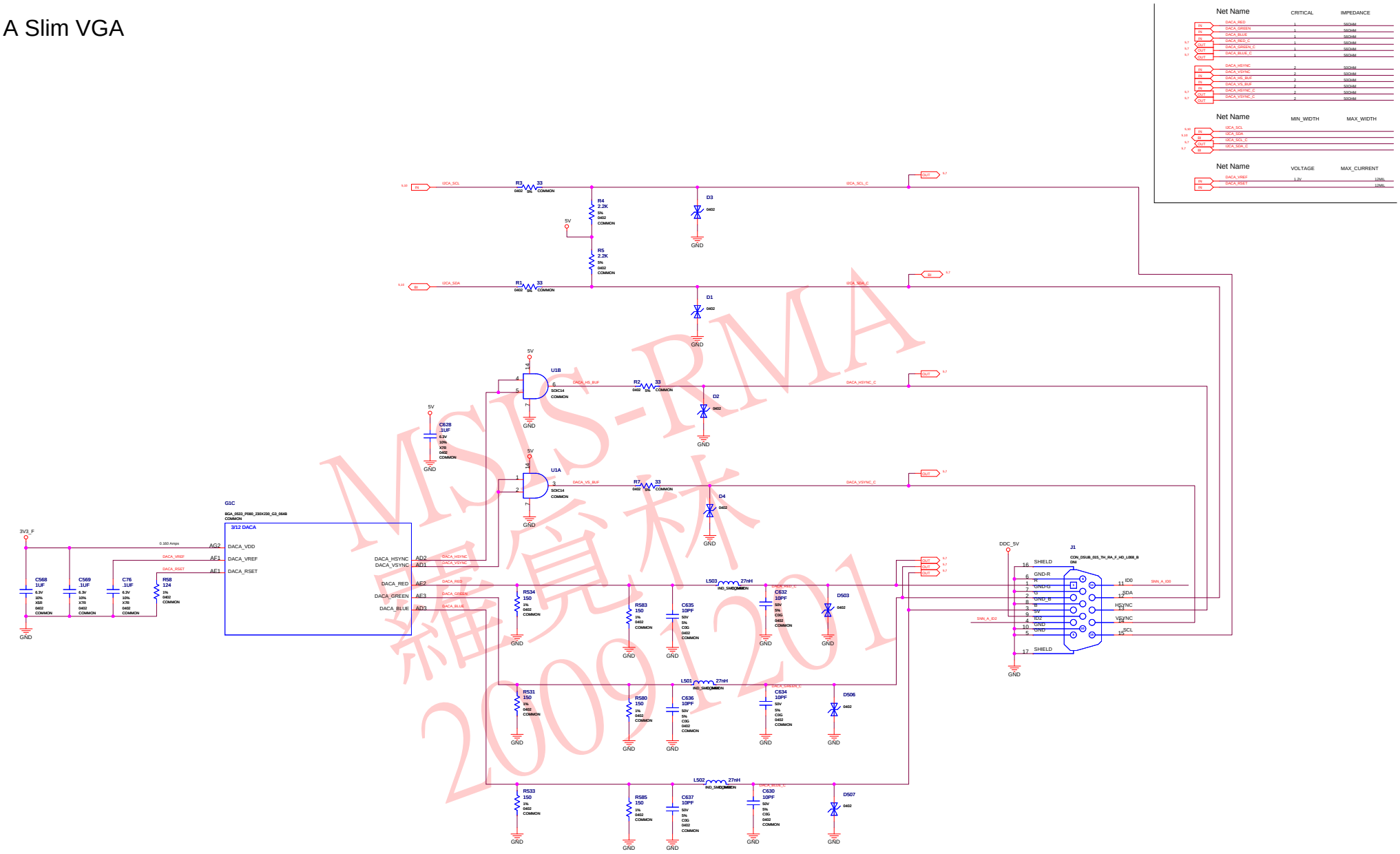

MSIS-RMA
2009121

ASSEMBLY	BASE LEVEL GENERIC SCHEMATIC ONLY, COMMON & NO_STUFF ASSEMBLY NOTES AND BOM NOT FINAL
PAGE DETAIL	DAC A Slim VGA

ALL NVIDIA DESIGN SPECIFICATIONS, REFERENCE SPECIFICATIONS, REFERENCE BOARDS, FILES, DRAWINGS, DIAGNOSTICS, LISTS AND OTHER DOCUMENTS OR INFORMATION (TOGETHER AND SEPARATELY, 'MATERIALS') ARE BEING PROVIDED 'AS IS'. THE MATERIALS MAY CONTAIN KNOWN AND UNKNOWN VIOLATIONS OR DEVIATIONS OF INDUSTRY STANDARDS AND SPECIFICATIONS. NVIDIA MAKES NO WARRANTIES, EXPRESSED, IMPLIED, STATUTORY OR OTHERWISE WITH RESPECT TO THE MATERIALS OR OTHERWISE, AND EXPRESSLY DISCLAIMS ALL IMPLIED WARRANTIES INCLUDING, WITHOUT LIMITATION, THE WARRANTIES OF DESIGN, OF NONINFRINGEMENT, MERCHANTABILITY OR FITNESS FOR A PARTICULAR PURPOSE, OR ARISING FROM A COURSE OF DEALING, TRADE USAGE, TRADE PRACTICE, OR INDUSTRY STANDARDS.

NVIDIA CORPORATION
2701 SAN TOMAS EXPRESSWAY
SANTA CLARA, CA 95050, USA

NV_PN	600-10690-BASE-000 A		
ID		PAGE	
NAME		DATE	01-DEC-2008

DAC B VGA Header

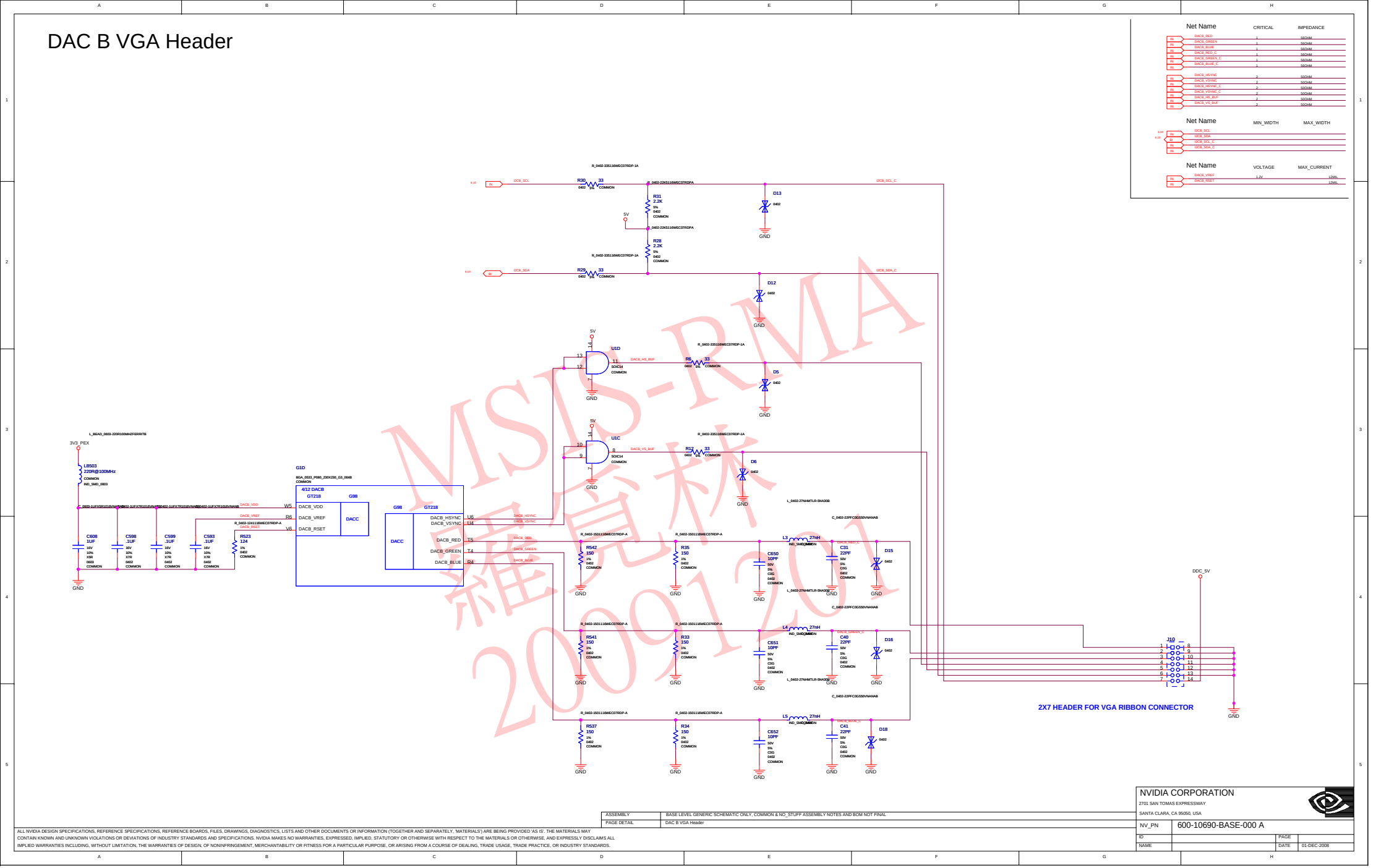

MSIS-RMA
羅宣林
20091201

ASSEMBLY	BASE LEVEL GENERIC SCHEMATIC ONLY, COMMON & NO_STUFF ASSEMBLY NOTES AND BOM NOT FINAL
PAGE DETAIL	DAC B VGA Header

ALL NVIDIA DESIGN SPECIFICATIONS, REFERENCE SPECIFICATIONS, REFERENCE BOARDS, FILES, DRAWINGS, DIAGNOSTICS, LISTS AND OTHER DOCUMENTS OR INFORMATION (TOGETHER AND SEPARATELY, 'MATERIALS') ARE BEING PROVIDED 'AS IS'. THE MATERIALS MAY CONTAIN KNOWN AND UNKNOWN VIOLATIONS OR DEVIATIONS OF INDUSTRY STANDARDS AND SPECIFICATIONS. NVIDIA MAKES NO WARRANTIES, EXPRESSED, IMPLIED, STATUTORY OR OTHERWISE WITH RESPECT TO THE MATERIALS OR OTHERWISE, AND EXPRESSLY DISCLAIMS ALL IMPLIED WARRANTIES INCLUDING, WITHOUT LIMITATION, THE WARRANTIES OF DESIGN, OF NONINFRINGEMENT, MERCHANTABILITY OR FITNESS FOR A PARTICULAR PURPOSE, OR ARISING FROM A COURSE OF DEALING, TRADE USAGE, TRADE PRACTICE, OR INDUSTRY STANDARDS.

NVIDIA CORPORATION
2701 SAN TOMAS EXPRESSWAY
SANTA CLARA, CA 95050, USA

NV_PN	600-10690-BASE-000 A		
ID		PAGE	
NAME		DATE	01-DEC-2008

TMDS Interface

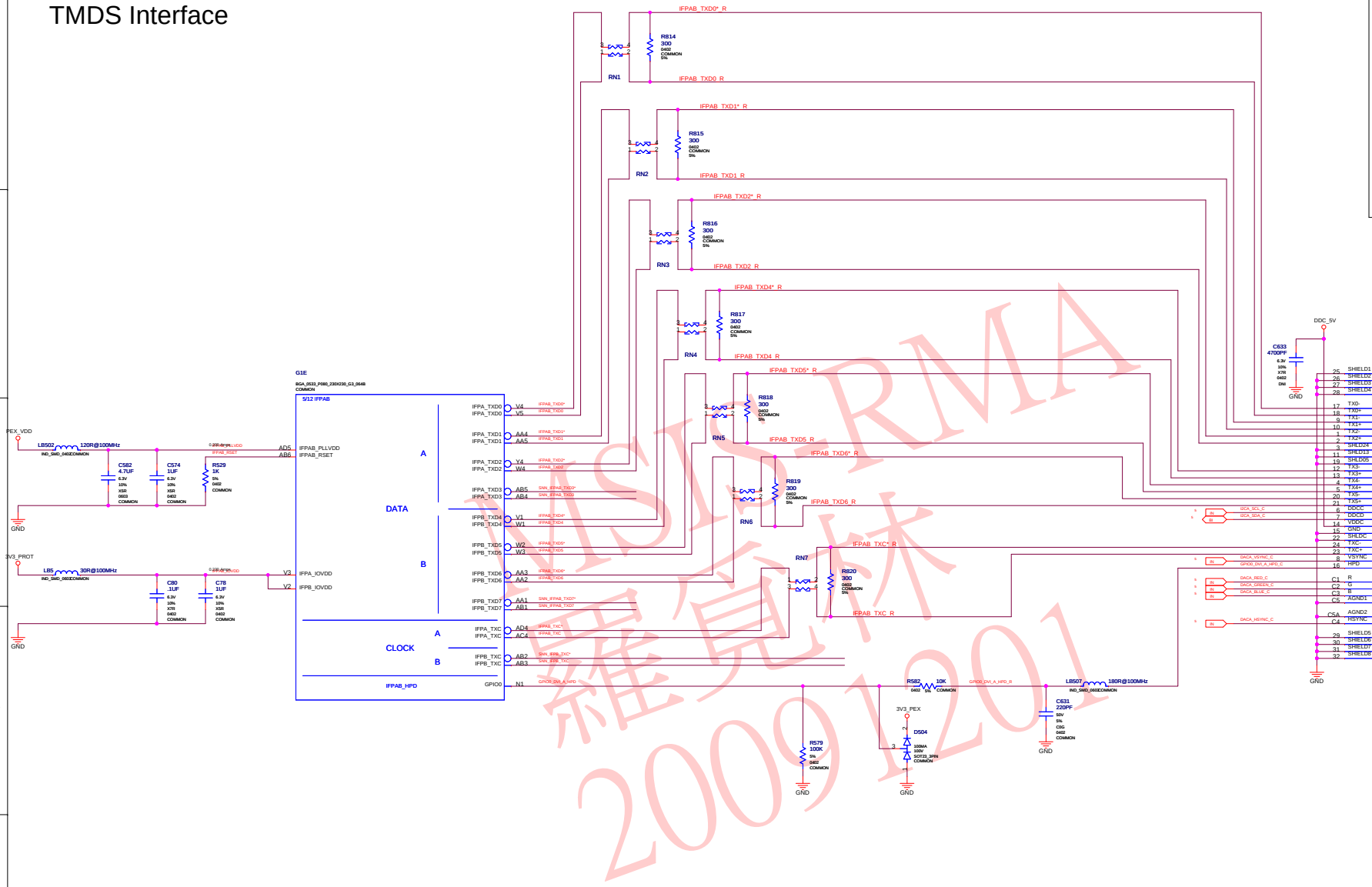

Net Name	DIFF_PAIR	CRITICAL	IMPEDANCE
IN IFPAB_TXD0*	IFPAB_TXD0	1	90DIFF
IN IFPAB_TXD0	IFPAB_TXD0	1	90DIFF
IN IFPAB_TXD1*	IFPAB_TXD1	1	90DIFF
IN IFPAB_TXD1	IFPAB_TXD1	1	90DIFF
IN IFPAB_TXD2*	IFPAB_TXD2	1	90DIFF
IN IFPAB_TXD2	IFPAB_TXD2	1	90DIFF
IN IFPAB_TXD4*	IFPAB_TXD4	1	90DIFF
IN IFPAB_TXD4	IFPAB_TXD4	1	90DIFF
IN IFPAB_TXD5*	IFPAB_TXD5	1	90DIFF
IN IFPAB_TXD5	IFPAB_TXD5	1	90DIFF
IN IFPAB_TXD6*	IFPAB_TXD6	1	90DIFF
IN IFPAB_TXD6	IFPAB_TXD6	1	90DIFF
IN IFPAB_TXC*	IFPAB_TXC	1	90DIFF
IN IFPAB_TXC	IFPAB_TXC	1	90DIFF

Net Name	MIN_WIDTH	MAX_WIDTH
IN GPIO0_DVI_A_HPD		
IN GPIO0_DVI_A_HPD_R		
IN GPIO0_DVI_A_HPD_C		

Net Name	VOLTAGE	MAX_CURRENT	
IN IFPAB_PLLVDD	1.05V	0.200A	10MIL
IN IFPAB_IOVDD	3.3V	0.230A	10MIL
IN IFPAB_RSET			12MIL

MSI-RMA 羅覓林 20091201

ASSEMBLY	BASE LEVEL GENERIC SCHEMATIC ONLY, COMMON & NO_STUFF ASSEMBLY NOTES AND BOM NOT FINAL
PAGE DETAIL	TMDS Interface

ALL NVIDIA DESIGN SPECIFICATIONS, REFERENCE SPECIFICATIONS, REFERENCE BOARDS, FILES, DRAWINGS, DIAGNOSTICS, LISTS AND OTHER DOCUMENTS OR INFORMATION (TOGETHER AND SEPARATELY, 'MATERIALS') ARE BEING PROVIDED 'AS IS'. THE MATERIALS MAY CONTAIN KNOWN AND UNKNOWN VIOLATIONS OR DEVIATIONS OF INDUSTRY STANDARDS AND SPECIFICATIONS. NVIDIA MAKES NO WARRANTIES, EXPRESSED, IMPLIED, STATUTORY OR OTHERWISE WITH RESPECT TO THE MATERIALS OR OTHERWISE, AND EXPRESSLY DISCLAIMS ALL IMPLIED WARRANTIES INCLUDING, WITHOUT LIMITATION, THE WARRANTIES OF DESIGN, OF NONINFRINGEMENT, MERCHANTABILITY OR FITNESS FOR A PARTICULAR PURPOSE, OR ARISING FROM A COURSE OF DEALING, TRADE USAGE, TRADE PRACTICE, OR INDUSTRY STANDARDS.

NVIDIA CORPORATION
2701 SAN TOMAS EXPRESSWAY
SANTA CLARA, CA 95050, USA

NV_PN	600-10690-BASE-000 A		
ID		PAGE	
NAME		DATE	01-DEC-2008

HDMI Connector

Net Name	MIN_WIDTH	MAX_WIDTH
GPIO_DP_HPD_C		
GPIO_DP_HPD_R		
GPIO19_IFPD_HPD		
IFPD_AUX_SEL		
DP_MODE*		
DP_MODE_C		

Net Name	VOLTAGE	MAX_CURRENT	
IFPD_PLLVDD	3.3V	0.200A	10MIL
IFPD_IOVDD	1.05V	0.250A	10MIL
IFPD_RSET			12MIL

Net Name	DIFF_PAIR	CRITICAL	IMPEDANCE
IFPD_AUX*	IFPD_AUX	1	90DIFF
IFPD_AUX	IFPD_AUX	1	90DIFF
IFPD_AUX_BYP*	IFPD_AUX_BYP	1	90DIFF
IFPD_AUX_BYP	IFPD_AUX_BYP	1	90DIFF
IFPD_AUX_C*	IFPD_AUX_C	1	90DIFF
IFPD_AUX_C	IFPD_AUX_C	1	90DIFF
IFPD_L3*	IFPD_L3	1	90DIFF
IFPD_L3	IFPD_L3	1	90DIFF
IFPD_L2*	IFPD_L2	1	90DIFF
IFPD_L2	IFPD_L2	1	90DIFF
IFPD_L1*	IFPD_L1	1	90DIFF
IFPD_L1	IFPD_L1	1	90DIFF
IFPD_L0*	IFPD_L0	1	90DIFF
IFPD_L0	IFPD_L0	1	90DIFF
IFPD_L3_C*	IFPD_L3_C	1	90DIFF
IFPD_L3_C	IFPD_L3_C	1	90DIFF
IFPD_L2_C*	IFPD_L2_C	1	90DIFF
IFPD_L2_C	IFPD_L2_C	1	90DIFF
IFPD_L1_C*	IFPD_L1_C	1	90DIFF
IFPD_L1_C	IFPD_L1_C	1	90DIFF
IFPD_L0_C*	IFPD_L0_C	1	90DIFF
IFPD_L0_C	IFPD_L0_C	1	90DIFF

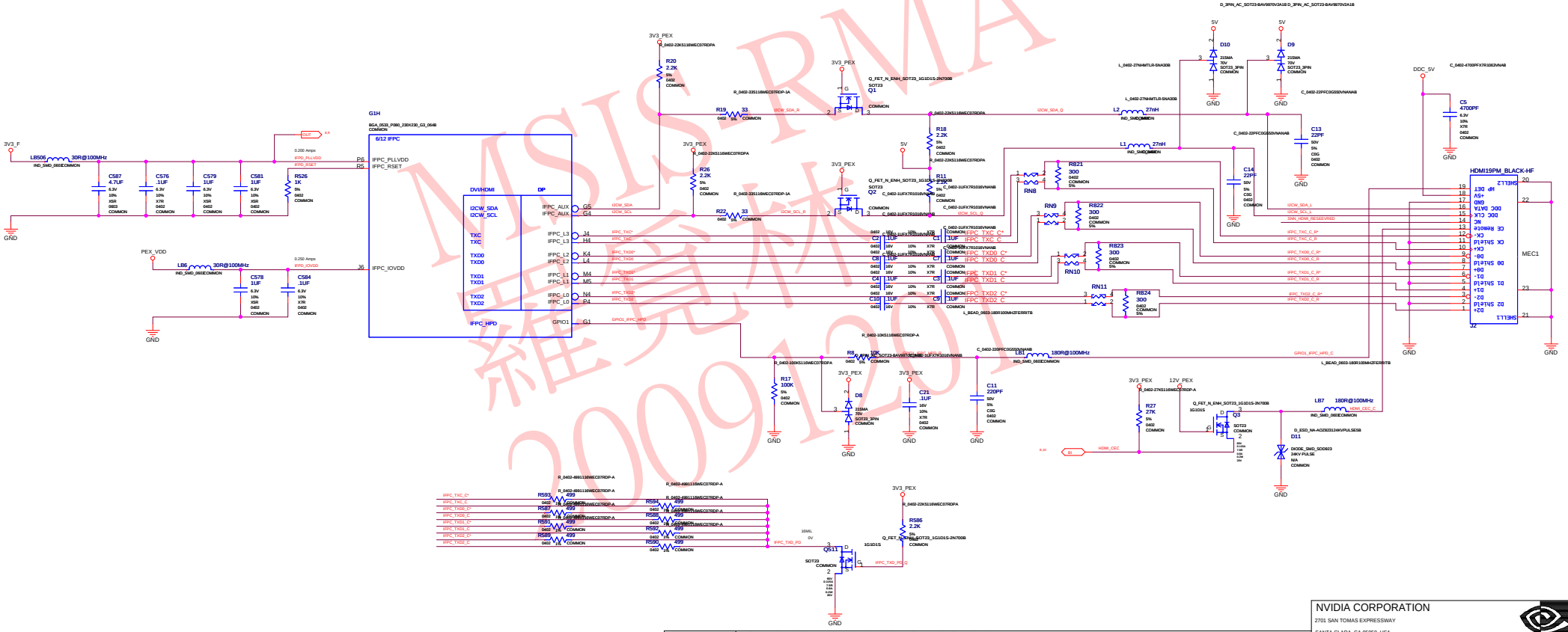

ASSEMBLY	BASE LEVEL GENERIC SCHEMATIC ONLY, COMMON & NO_STUFF ASSEMBLY NOTES AND BOM NOT FINAL
PAGE DETAIL	DisplayPort Connector

ALL NVIDIA DESIGN SPECIFICATIONS, REFERENCE SPECIFICATIONS, REFERENCE BOARDS, FILES, DRAWINGS, DIAGNOSTICS, LISTS AND OTHER DOCUMENTS OR INFORMATION (TOGETHER AND SEPARATELY, 'MATERIALS') ARE BEING PROVIDED 'AS IS'. THE MATERIALS MAY CONTAIN KNOWN AND UNKNOWN VIOLATIONS OR DEVIATIONS OF INDUSTRY STANDARDS AND SPECIFICATIONS. NVIDIA MAKES NO WARRANTIES, EXPRESSED, IMPLIED, STATUTORY OR OTHERWISE WITH RESPECT TO THE MATERIALS OR OTHERWISE, AND EXPRESSLY DISCLAIMS ALL IMPLIED WARRANTIES INCLUDING, WITHOUT LIMITATION, THE WARRANTIES OF DESIGN, OF NONINFRINGEMENT, MERCHANTABILITY OR FITNESS FOR A PARTICULAR PURPOSE, OR ARISING FROM A COURSE OF DEALING, TRADE USAGE, TRADE PRACTICE, OR INDUSTRY STANDARDS.

NVIDIA CORPORATION
2701 SAN TOMAS EXPRESSWAY
SANTA CLARA, CA 95050, USA

NV_PN	600-10690-BASE-000 A		
ID		PAGE	
NAME		DATE	01-DEC-2008

IFPC, IFPE Interface, Fan, Mechanical

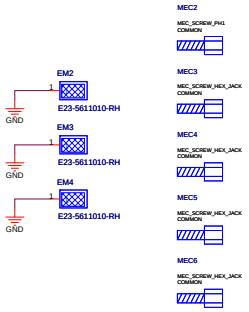

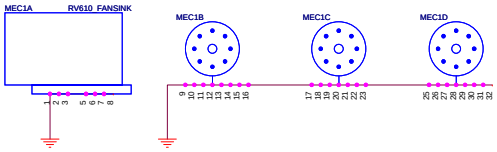

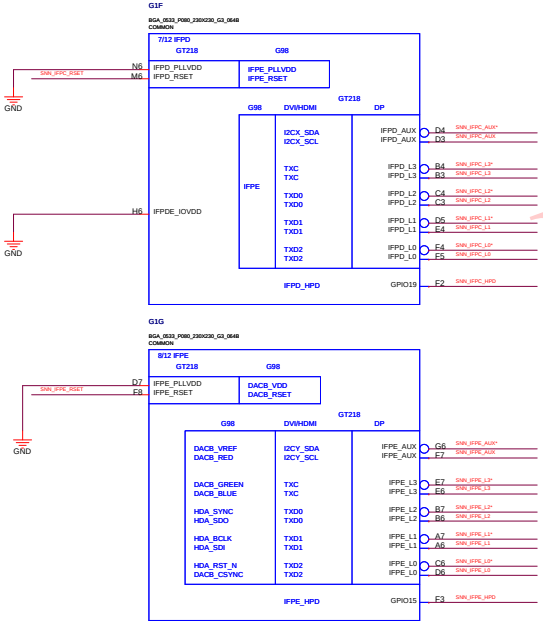

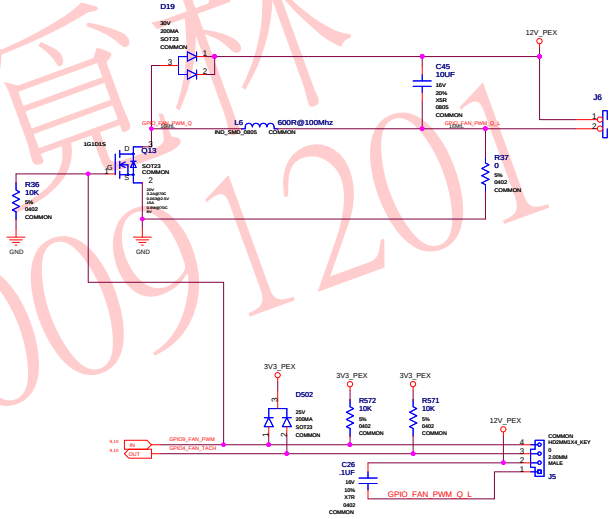

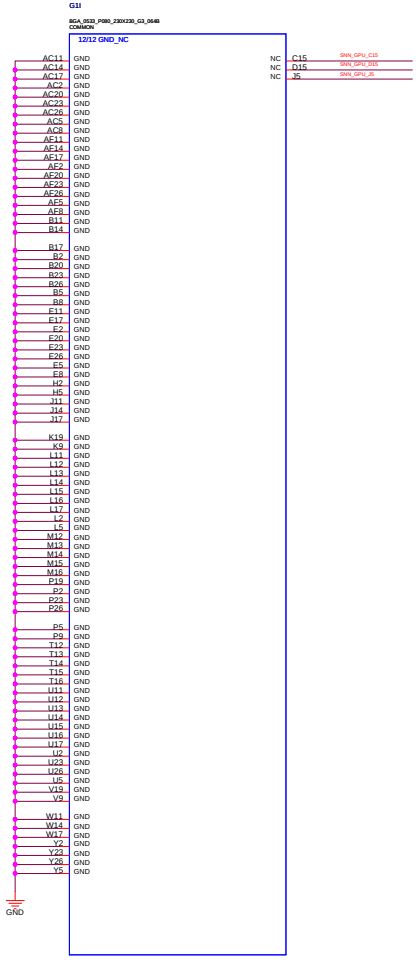

MSIS-RMA
羅宜林
20091201

Net Name	VOLTAGE	MAX_CURRENT
IFPC_PLLVDD	3.3V	0.200A
IFPC_IOVDD	1.05V	

Net Name	MIN_WIDTH	MAX_WIDTH
GPIO9_FAN_TACH		
GPIO9_FAN_PWM		

ASSEMBLY	BASE LEVEL GENERIC SCHEMATIC ONLY, COMMON & NO_STUFF ASSEMBLY NOTES AND BOM NOT FINAL
PAGE DETAIL	IFPC, IFPE Interface, Fan, Mechanical

ALL NVIDIA DESIGN SPECIFICATIONS, REFERENCE SPECIFICATIONS, REFERENCE BOARDS, FILES, DRAWINGS, DIAGNOSTICS, LISTS AND OTHER DOCUMENTS OR INFORMATION (TOGETHER AND SEPARATELY, 'MATERIALS') ARE BEING PROVIDED 'AS IS'. THE MATERIALS MAY CONTAIN KNOWN AND UNKNOWN VIOLATIONS OR DEVIATIONS OF INDUSTRY STANDARDS AND SPECIFICATIONS. NVIDIA MAKES NO WARRANTIES, EXPRESSED, IMPLIED, STATUTORY OR OTHERWISE WITH RESPECT TO THE MATERIALS OR OTHERWISE, AND EXPRESSLY DISCLAIMS ALL IMPLIED WARRANTIES INCLUDING, WITHOUT LIMITATION, THE WARRANTIES OF DESIGN, OF NONINFRINGEMENT, MERCHANTABILITY OR FITNESS FOR A PARTICULAR PURPOSE, OR ARISING FROM A COURSE OF DEALING, TRADE USAGE, TRADE PRACTICE, OR INDUSTRY STANDARDS.

NVIDIA CORPORATION
2701 SAN TOMAS EXPRESSWAY
SANTA CLARA, CA 95050, USA

NV_PN	600-10690-BASE-000 A		
ID		PAGE	
NAME		DATE	01-DEC-2008

XTAL, ROM, SPDIF, JTAG

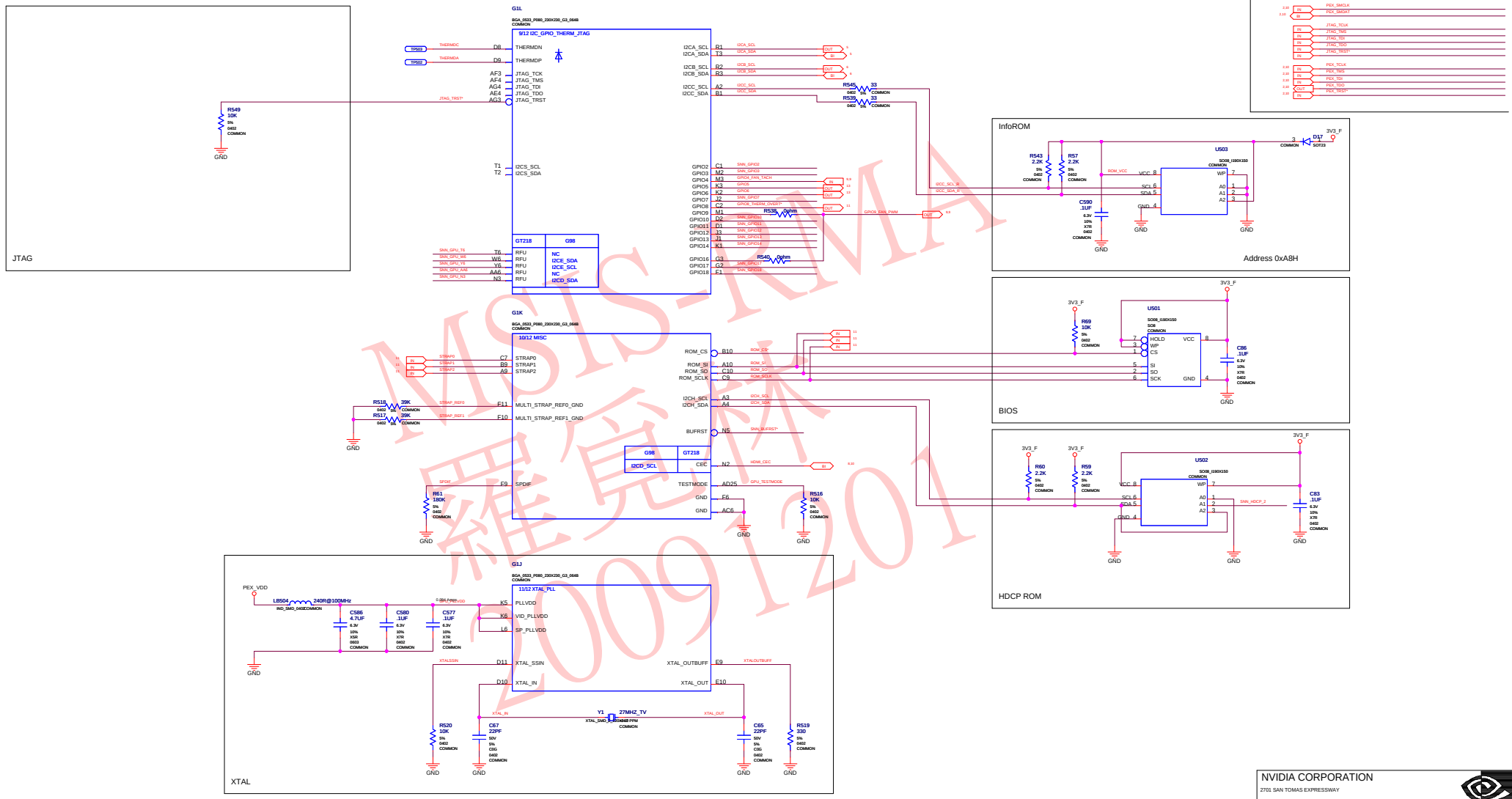

MSI-RMA 羅宏林 20091201

ASSEMBLY	BASE LEVEL GENERIC SCHEMATIC ONLY, COMMON & NO_STUFF ASSEMBLY NOTES AND BOM NOT FINAL
PAGE DETAIL	XTAL, ROM, SPDIF, JTAG

ALL NVIDIA DESIGN SPECIFICATIONS, REFERENCE SPECIFICATIONS, REFERENCE BOARDS, FILES, DRAWINGS, DIAGNOSTICS, LISTS AND OTHER DOCUMENTS OR INFORMATION (TOGETHER AND SEPARATELY, 'MATERIALS') ARE BEING PROVIDED 'AS IS'. THE MATERIALS MAY CONTAIN KNOWN AND UNKNOWN VIOLATIONS OR DEVIATIONS OF INDUSTRY STANDARDS AND SPECIFICATIONS. NVIDIA MAKES NO WARRANTIES, EXPRESSED, IMPLIED, STATUTORY OR OTHERWISE WITH RESPECT TO THE MATERIALS OR OTHERWISE, AND EXPRESSLY DISCLAIMS ALL IMPLIED WARRANTIES INCLUDING, WITHOUT LIMITATION, THE WARRANTIES OF DESIGN, OF NONINFRINGEMENT, MERCHANTABILITY OR FITNESS FOR A PARTICULAR PURPOSE, OR ARISING FROM A COURSE OF DEALING, TRADE USAGE, TRADE PRACTICE, OR INDUSTRY STANDARDS.

NVIDIA CORPORATION
2701 SAN TOMAS EXPRESSWAY
SANTA CLARA, CA 95050, USA

NV_PN	600-10690-BASE-000 A		
ID		PAGE	
NAME		DATE	01-DEC-2008

Thermal Protection, IFP_IOVDD, Straps

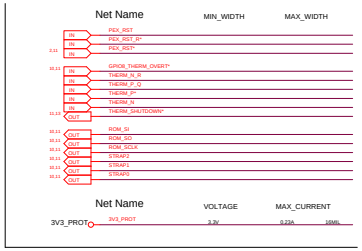

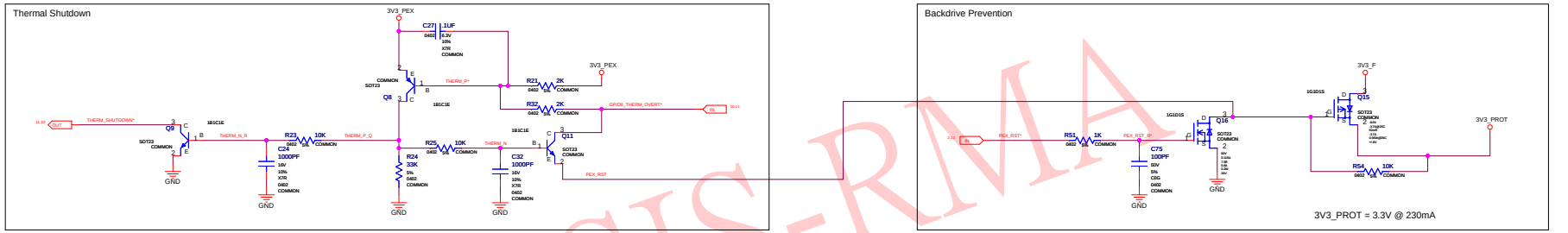

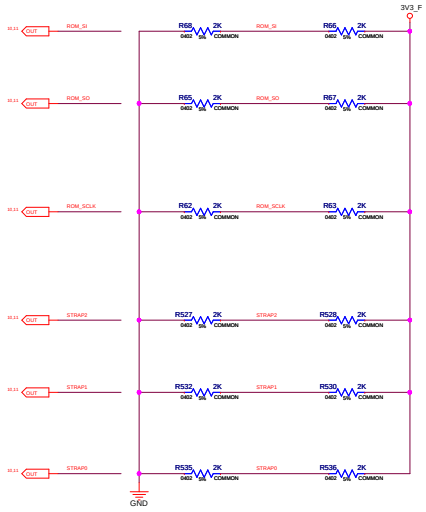

GT218 Straps MLS Mode

Bit	Signal	Values	
03:	RAMCFG[3]	0000	Elpida
		0001	Samsung, Micron
02:	RAMCFG[2]	0010	Qimonda
		0011	Hynix
01:	RAMCFG[1]	0100	Nanya
00:	RAMCFG[0]		
03:	XCLK_417	0	277 (Default)
02:	FB[0]	0	256M (Default)
01:	SMB_ALT_ADDR	0	0x9C
		1	0x6C
00:	VGA_DEVICE	0	Class code 302
		1	Class code 300
03:	PCI_DEVID_EXT	0	GT218-300-A1
02:	SUB_VENDOR	0	No BIOS
		1	BIOS
01:	SLOT_CLK_CFG	0	Disable
		1	Enable
00:	PEX_PLL_EN_TERM100	0	Disable
		1	Enable
03:	PCI_DEVID[3]	0000	GT218-300-A1
02:	PCI_DEVID[2]		
01:	PCI_DEVID[1]		
00:	PCI_DEVID[0]		
03:	3GIO_PADCFG_LUT_ADR[3]	0000	DSKTOP_DEFAULT
		0001	MOBILE_DEFAULT
02:	3GIO_PADCFG_LUT_ADR[2]	0010	MOBILE_NTHRS_LLAMP
		0011	MOBILE_NTHRS_LAMP
01:	3GIO_PADCFG_LUT_ADR[1]	0100	MOBILE_NTHRS_HAMP
		0101	MOBILE_NTHRS_HHAMP
00:	3GIO_PADCFG_LUT_ADR[0]	0110	MOBILE_NTHRS_HHHAMP
		0111	MOBILE_NTHRS_HHHHAMP
		1000	DSKTOP_HTHRS
		1001	MOBILE_HTHRS_NAMP
		1010	MOBILE_HTHRS_LLAMP
		1011	MOBILE_HTHRS_LAMP
		1100	MOBILE_HTHRS_HAMP
		1101	MOBILE_HTHRS_HHAMP
		1110	MOBILE_HTHRS_HHHAMP
		1111	MOBILE_HTHRS_HHHHAMP
03:	USER[3]	0000	Default
02:	USER[2]		
01:	USER[1]		
00:	USER[0]		

Multilevel Straps

5K to GND	0000
10K to GND	0001
15K to GND	0010
20K to GND	0011
25K to GND	0100
30K to GND	0101
35K to GND	0110
40K to GND	0111
5K to VCC	1000
10K to VCC	1001
15K to VCC	1010
20K to VCC	1011
25K to VCC	1100
30K to VCC	1101
35K to VCC	1110
40K to VCC	1111

GT218 Straps BU Mode

Bit	Signal	Values	
	PCI_DEVID_EXT	0	GT218-300-A1
	XCLK_417	0	277 (Default)
	3GIO_PADCFG_LUT_ADR[3]	0000	DSKTOP_DEFAULT
		0001	MOBILE_DEFAULT
		0010	MOBILE_NTHRS_LLAMP
		0011	MOBILE_NTHRS_LAMP
		0100	MOBILE_NTHRS_HAMP
		0101	MOBILE_NTHRS_HHAMP
		0110	MOBILE_NTHRS_HHHAMP
		0111	MOBILE_NTHRS_HHHHAMP
		1000	DSKTOP_HTHRS
		1001	MOBILE_HTHRS_NAMP
		1010	MOBILE_HTHRS_LLAMP
		1011	MOBILE_HTHRS_LAMP
		1100	MOBILE_HTHRS_HAMP
		1101	MOBILE_HTHRS_HHAMP
		1110	MOBILE_HTHRS_HHHAMP
		1111	MOBILE_HTHRS_HHHHAMP
	3GIO_PADCFG_LUT_ADR[2]		
	3GIO_PADCFG_LUT_ADR[1]		
	3GIO_PADCFG_LUT_ADR[0]		

GT218 Straps PM Mode

Bit	Signal	Values	
	PCI_DEVID_EXT	0	GT218-300-A1
	XCLK_417	0	277/277 OR 417/417
	PCI_DEVID[3]	0	GT218-300-A1
	RAMCFG[3]	0000	Elpida
		0001	Samsung, Micron
		0010	Qimonda
		0011	Hynix
		0100	Nanya
	RAMCFG[1]		
	RAMCFG[0]		

Mode	REF0/REF1
MLS	Stuff
BU	No stuff
PM	Stuff one

VSIS-RMA 羅宗林 20091001

ASSEMBLY	BASE LEVEL GENERIC SCHEMATIC ONLY, COMMON & NO_STUFF ASSEMBLY NOTES AND BOM NOT FINAL
PAGE DETAIL	Thermal Protection, IFP_IOVDD, Straps

ALL NVIDIA DESIGN SPECIFICATIONS, REFERENCE SPECIFICATIONS, REFERENCE BOARDS, FILES, DRAWINGS, DIAGNOSTICS, LISTS AND OTHER DOCUMENTS OR INFORMATION (TOGETHER AND SEPARATELY, "MATERIALS") ARE BEING PROVIDED 'AS IS'. THE MATERIALS MAY CONTAIN KNOWN AND UNKNOWN VIOLATIONS OR DEVIATIONS OF INDUSTRY STANDARDS AND SPECIFICATIONS. NVIDIA MAKES NO WARRANTIES, EXPRESSED, IMPLIED, STATUTORY OR OTHERWISE WITH RESPECT TO THE MATERIALS OR OTHERWISE, AND EXPRESSLY DISCLAIMS ALL IMPLIED WARRANTIES INCLUDING, WITHOUT LIMITATION, THE WARRANTIES OF DESIGN, OF NONINFRINGEMENT, MERCHANTABILITY OR FITNESS FOR A PARTICULAR PURPOSE, OR ARISING FROM A COURSE OF DEALING, TRADE USAGE, TRADE PRACTICE, OR INDUSTRY STANDARDS.

NVIDIA CORPORATION
2701 SAN TOMAS EXPRESSWAY
SANTA CLARA, CA 95050, USA

NV_PN	600-10690-BASE-000 A		
ID		PAGE	
NAME		DATE	01-DEC-2008

Power Supply I: FBVDD/Q, PEX_VDD, 5V, 3V3_F

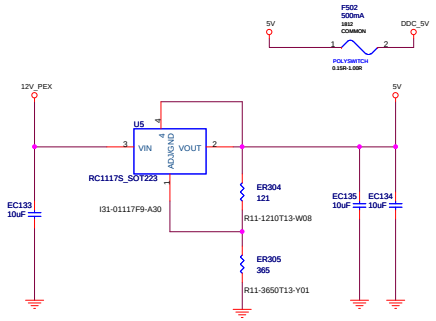

Vout=1.25V* [1+(ER305/ER304)]

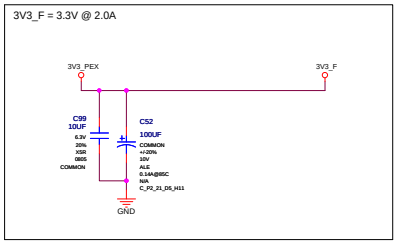

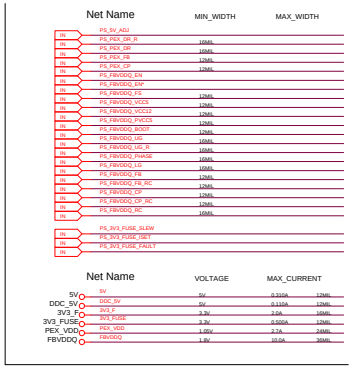

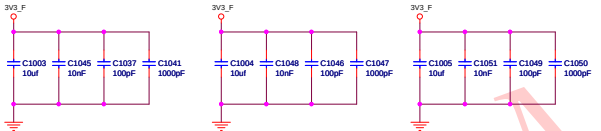

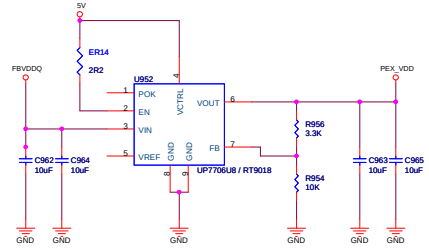

Vout=0.8V * (1+ R995 / R954)

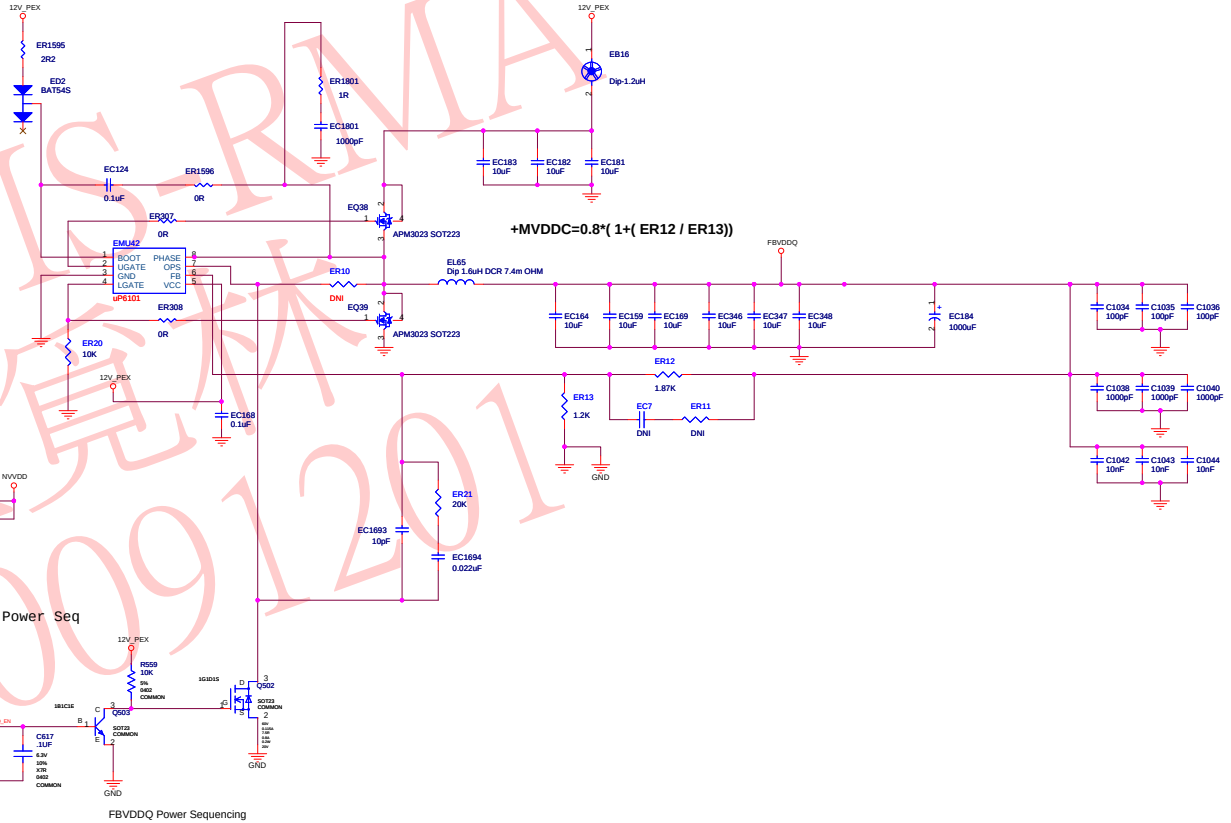

MSI-RMA 羅賓林 20091201

ASSEMBLY	BASE LEVEL GENERIC SCHEMATIC ONLY, COMMON & NO_STUFF ASSEMBLY NOTES AND BOM NOT FINAL
PAGE DETAIL	Power Supply I: FBVDD/Q, PEX_VDD, 5V, 3V3_F

ALL NVIDIA DESIGN SPECIFICATIONS, REFERENCE SPECIFICATIONS, REFERENCE BOARDS, FILES, DRAWINGS, DIAGNOSTICS, LISTS AND OTHER DOCUMENTS OR INFORMATION (TOGETHER AND SEPARATELY, 'MATERIALS') ARE BEING PROVIDED 'AS IS'. THE MATERIALS MAY CONTAIN KNOWN AND UNKNOWN VIOLATIONS OR DEVIATIONS OF INDUSTRY STANDARDS AND SPECIFICATIONS. NVIDIA MAKES NO WARRANTIES, EXPRESSED, IMPLIED, STATUTORY OR OTHERWISE WITH RESPECT TO THE MATERIALS OR OTHERWISE, AND EXPRESSLY DISCLAIMS ALL IMPLIED WARRANTIES INCLUDING, WITHOUT LIMITATION, THE WARRANTIES OF DESIGN, OF NONINFRINGEMENT, MERCHANTABILITY OR FITNESS FOR A PARTICULAR PURPOSE, OR ARISING FROM A COURSE OF DEALING, TRADE USAGE, TRADE PRACTICE, OR INDUSTRY STANDARDS.

NVIDIA CORPORATION
2701 SAN TOMAS EXPRESSWAY
SANTA CLARA, CA 95050, USA

NV_PN	600-10690-BASE-000 A
ID	
PAGE	
NAME	
DATE	01-DEC-2008

Power Supply II: PLLVDD, NVVDD

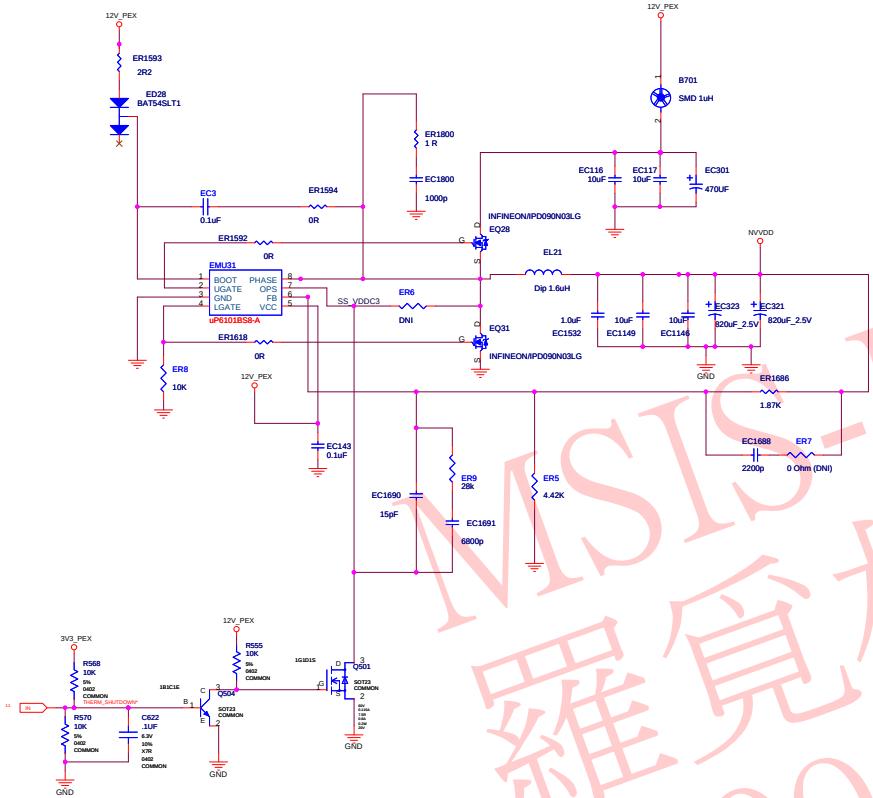

Net Name	MIN_WIDTH	MAX_WIDTH	CRITICAL
PS_NVVDD_EN*			
PS_NVVDD_FS	12MIL		
PS_NVVDD_VCC12	12MIL		
PS_NVVDD_VCC5	12MIL		
PS_NVVDD_PVCC5	12MIL		
PS_NVVDD_BOOT	12MIL		
PS_NVVDD_LDO			
PS_NVVDD_UG	16MIL		
PS_NVVDD_UG_R	16MIL		
PS_NVVDD_PHASE	16MIL		
PS_NVVDD_LG	16MIL		
PS_NVVDD_LG_D	16MIL		
PS_NVVDD_LG_R	16MIL		
PS_NVVDD_RC	16MIL		
PS_NVVDD_FB	12MIL		
PS_NVVDD_FB_RC	12MIL		
PS_NVVDD_CP	12MIL		
PS_NVVDD_CP_RC	12MIL		
NVVDD_SENSE			2
NVVDD_SENSE_R			2
GPIO5_NVVDDCTL			
PS_PEX_PLL_ADJ			

Net Name	VOLTAGE	MAX_CURRENT		POWER_NET
12V_PEX	12V_PEX	12V	5.5A	36MIL	TRUE
3V3_PEX	3V3_PEX	3.3V	3.0A	16MIL	TRUE
NVVDD	NVVDD	1.1V	17.5A	36MIL	

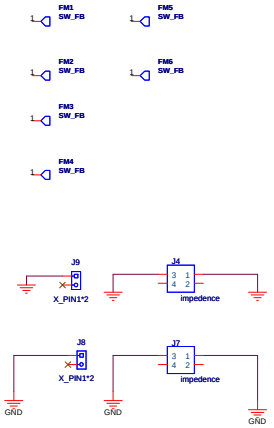

MSIS-RMA
羅覓林
20091201

ASSEMBLY	BASE LEVEL GENERIC SCHEMATIC ONLY, COMMON & NO_STUFF ASSEMBLY NOTES AND BOM NOT FINAL
PAGE DETAIL	Power Supply II: PLLVDD, NVVDD

ALL NVIDIA DESIGN SPECIFICATIONS, REFERENCE SPECIFICATIONS, REFERENCE BOARDS, FILES, DRAWINGS, DIAGNOSTICS, LISTS AND OTHER DOCUMENTS OR INFORMATION (TOGETHER AND SEPARATELY, 'MATERIALS') ARE BEING PROVIDED 'AS IS'. THE MATERIALS MAY CONTAIN KNOWN AND UNKNOWN VIOLATIONS OR DEVIATIONS OF INDUSTRY STANDARDS AND SPECIFICATIONS. NVIDIA MAKES NO WARRANTIES, EXPRESSED, IMPLIED, STATUTORY OR OTHERWISE WITH RESPECT TO THE MATERIALS OR OTHERWISE, AND EXPRESSLY DISCLAIMS ALL IMPLIED WARRANTIES INCLUDING, WITHOUT LIMITATION, THE WARRANTIES OF DESIGN, OF NONINFRINGEMENT, MERCHANTABILITY OR FITNESS FOR A PARTICULAR PURPOSE, OR ARISING FROM A COURSE OF DEALING, TRADE USAGE, TRADE PRACTICE, OR INDUSTRY STANDARDS.

NVIDIA CORPORATION
2701 SAN TOMAS EXPRESSWAY
SANTA CLARA, CA 95050, USA

NV_PN	600-10690-BASE-000 A		
ID		PAGE	
NAME		DATE	01-DEC-2008

Title: Basenet Report
Design: design
Date: Dec 1 21:48:15 2008

Base nets and synonyms for
design_lib.DESIGN(@design_lib.design(sch
_1))
Base Signal Location([Zone][dir])

3V3_F 12.2H
3V3_FUSE 12.2H
3V3_PEX 13.2G
3V3_PROT 11.1H
5V 12.2H
12V_PEX 13.2G
DACA_BLUE 5.1G< 5.4C
DACA_BLUE_C 5.1G> 5.4F> 7.3F<
DACA_GREEN 5.1G< 5.4C
DACA_GREEN_C 5.1G> 5.4F> 7.3F<
DACA_HSYNC 5.1G< 5.4C
DACA_HSYNC_C 5.1G> 5.3F> 7.4F<
DACA_HS_BUF 5.1G< 5.3D
DACA_RED 5.1G< 5.4C
DACA_RED_C 5.1G> 5.4F> 7.3F<
DACA_RSET 5.2G< 5.4B
DACA_VREF 5.2G< 5.4B
DACA_VSYNC 5.1G< 5.4C
DACA_VSYNC_C 5.1G> 5.3F> 7.3F<
DACA_VS_BUF 5.1G< 5.3D
DACB_BLUE 6.1G< 6.4C
DACB_BLUE_C 6.1G< 6.5E
DACB_GREEN 6.1G< 6.4C
DACB_GREEN_C 6.1G< 6.4E
DACB_HSYNC 6.1G< 6.4C
DACB_HSYNC_C 6.1G< 6.3E
DACB_HS_BUF 6.1G< 6.3D
DACB_RED 6.1G< 6.4C
DACB_RED_C 6.1G< 6.4E
DACB_RSET 6.2G< 6.4B
DACB_VREF 6.2G< 6.4B
DACB_VSYNC 6.1G< 6.4C
DACB_VSYNC_C 6.1G< 6.3E
DACB_VS_BUF 6.1G< 6.3D
DDC_5V 12.2H
DP_MODE* 8.1F< 8.2F
DP_MODE_C 8.1F< 8.3G
FBA_CLK0 3.1G> 3.4D> 4.2A<
4.2B< 4.4A<
FBA_CLK0* 3.1G> 3.4D> 4.2A<
4.2B< 4.5A<
FBA_CLK1 3.1G> 3.4D> 4.2D<
4.2F< 4.5A<
FBA_CLK1* 3.1G> 3.4D> 4.2D<
4.2F< 4.5A<
FBA_CMD<0> 3.2C 3.2G 4.1A 4.1C
FBA_CMD<30..0> 3.1G> 3.2D> 4.1A<>
FBA_CMD<1> 3.2C 3.2G 4.1A 4.1C
4.1E 4.1F
FBA_CMD<2> 3.2C 3.2H 4.1A 4.1C
FBA_CMD<3> 3.2C 3.2H 4.2A 4.2C
4.2E 4.2F
FBA_CMD<4> 3.2C 3.3G 4.1E 4.1F
FBA_CMD<5> 3.3C 3.3G 4.1E 4.1F
FBA_CMD<6> 3.3C 3.3H 4.1E 4.1F
FBA_CMD<7> 3.3C 3.3F 4.2E 4.2F
FBA_CMD<8> 3.3C 3.3H 4.1E 4.1F
FBA_CMD<9> 3.3C 3.3E 4.2A 4.2C
4.2E 4.2F
FBA_CMD<10> 3.3C 3.3E 4.1A 4.1C
4.1E 4.1F
FBA_CMD<11> 3.3C 3.3F 4.1A 4.1C
4.1E 4.1F
FBA_CMD<12> 3.3C 3.3F 4.2A 4.2C
4.2E 4.2F
FBA_CMD<13> 3.3C 3.3G 4.1E 4.1F
FBA_CMD<14> 3.3C 3.3G 4.2A 4.2C
4.2E 4.2F
FBA_CMD<15> 3.2E 3.3C 4.3A 4.3C
4.3E 4.3F
FBA_CMD<16> 3.3C 3.3H 4.2A 4.2C
4.2E 4.2F
FBA_CMD<17> 3.3C 3.3H 4.2A 4.2C
4.2E 4.2F
FBA_CMD<18> 3.2F 3.3C 4.2A 4.2C
FBA_CMD<19> 3.3C 3.4E 4.1A 4.1C
4.1E 4.1F
FBA_CMD<20> 3.3C 3.4E 4.2A 4.2C
4.2E 4.2F
FBA_CMD<21> 3.3C 3.4F 4.2A 4.2C
4.2E 4.2F
FBA_CMD<22> 3.3C 3.4F 4.1A 4.1C
FBA_CMD<23> 3.3C 3.4G 4.2A 4.2C
4.2E 4.2F
FBA_CMD<24> 3.3C 3.4G 4.1A 4.1C
FBA_CMD<25> 3.3C 3.4H 4.1A 4.1C
4.1E 4.1F

FBA_CMD<26> 3.3C 3.4H 4.2A 4.2C
4.2E 4.2F
FBA_CMD<27> 3.3C 3.4H 4.2A 4.2C
4.2E 4.2F
FBA_CMD<28> 3.3C 3.3E 4.3E 4.3F
FBA_CMD<29> 3.3C 3.4H 4.1A 4.1C
FBA_CMD<30> 3.2E 3.3C 4.3A 4.3C
FBA_D<0> 3.1B 4.4B
FBA_D<63..0> 3.1A<> 3.1G<> 4.4A<>
FBA_D<1> 3.1B 4.4B
FBA_D<2> 3.1B 4.4B
FBA_D<3> 3.1B 4.4B
FBA_D<4> 3.1B 4.4B
FBA_D<5> 3.1B 4.4B
FBA_D<6> 3.1B 4.4B
FBA_D<7> 3.1B 4.4B
FBA_D<8> 3.1B 4.4B
FBA_D<9> 3.1B 4.5B
FBA_D<10> 3.1B 4.5B
FBA_D<11> 3.2B 4.5B
FBA_D<12> 3.2B 4.5B
FBA_D<13> 3.2B 4.5B
FBA_D<14> 3.2B 4.5B
FBA_D<15> 3.2B 4.5B
FBA_D<16> 3.2B 4.4C
FBA_D<17> 3.2B 4.4C
FBA_D<18> 3.2B 4.4C
FBA_D<19> 3.2B 4.4C
FBA_D<20> 3.2B 4.4C
FBA_D<21> 3.2B 4.4C
FBA_D<22> 3.2B 4.4C
FBA_D<23> 3.2B 4.4C
FBA_D<24> 3.2B 4.4C
FBA_D<25> 3.2B 4.5C
FBA_D<26> 3.2B 4.5C
FBA_D<27> 3.2B 4.5C
FBA_D<28> 3.2B 4.5C
FBA_D<29> 3.2B 4.5C
FBA_D<30> 3.2B 4.5C
FBA_D<31> 3.2B 4.5C
FBA_D<32> 3.2B 4.4D
FBA_D<33> 3.2B 4.4D
FBA_D<34> 3.2B 4.4D
FBA_D<35> 3.2B 4.4D
FBA_D<36> 3.2B 4.4D
FBA_D<37> 3.2B 4.4D
FBA_D<38> 3.2B 4.4D
FBA_D<39> 3.2B 4.4D
FBA_D<40> 3.2B 4.4D
FBA_D<41> 3.3B 4.5D
FBA_D<42> 3.3B 4.5D
FBA_D<43> 3.3B 4.5D
FBA_D<44> 3.3B 4.5D
FBA_D<45> 3.3B 4.5D
FBA_D<46> 3.3B 4.5D
FBA_D<47> 3.3B 4.5D
FBA_D<48> 3.3B 4.4E
FBA_D<49> 3.3B 4.4E
FBA_D<50> 3.3B 4.4E
FBA_D<51> 3.3B 4.4E
FBA_D<52> 3.3B 4.4E
FBA_D<53> 3.3B 4.4E
FBA_D<54> 3.3B 4.4E
FBA_D<55> 3.3B 4.4E
FBA_D<56> 3.3B 4.4E
FBA_D<57> 3.3B 4.5E
FBA_D<58> 3.3B 4.5E
FBA_D<59> 3.3B 4.5E
FBA_D<60> 3.3B 4.5E
FBA_D<61> 3.3B 4.5E
FBA_D<62> 3.3B 4.5E
FBA_D<63> 3.3B 4.5E
FBA_DEBUG 3.2G< 3.4C
FBA_DQM<0> 3.3B 4.4B
FBA_DQM<7..0> 3.1G> 3.3A> 4.4A<
FBA_DQM<1> 3.3B 4.5B
FBA_DQM<2> 3.3B 4.4C
FBA_DQM<3> 3.3B 4.5C
FBA_DQM<4> 3.3B 4.4D
FBA_DQM<5> 3.4B 4.5D
FBA_DQM<6> 3.4B 4.4E
FBA_DQM<7> 3.4B 4.5E
FBA_DQS_RN<0> 3.1G 3.4B 4.4B
FBA_DQS_RN<7..0> 3.1G<> 3.4A<> 4.4A<>
FBA_DQS_RN<1> 3.1G 3.4B 4.5B
FBA_DQS_RN<2> 3.1G 3.4B 4.4C
FBA_DQS_RN<3> 3.1G 3.4B 4.5C
FBA_DQS_RN<4> 3.1G 3.4B 4.4D
FBA_DQS_RN<5> 3.1G 3.4B 4.5D
FBA_DQS_RN<6> 3.1G 3.4B 4.4E
FBA_DQS_RN<7> 3.1G 3.4B 4.5E
FBA_DQS_WP<0> 3.1G 3.4B 4.4B
FBA_DQS_WP<7..0> 3.1G<> 3.4A<> 4.4A<>
FBA_DQS_WP<1> 3.1G 3.4B 4.5B
FBA_DQS_WP<2> 3.1G 3.4B 4.4C
FBA_DQS_WP<3> 3.1G 3.4B 4.5C

FBA_DQS_WP<4> 3.1G 3.4B 4.4D
FBA_DQS_WP<5> 3.1G 3.4B 4.5D
FBA_DQS_WP<6> 3.1G 3.4B 4.4E
FBA_DQS_WP<7> 3.1G 3.4B 4.5E
FBA_ZQ0 4.1G< 4.3A
FBA_ZQ1 4.1G< 4.3C
FBA_ZQ2 4.1G< 4.3E
FBA_ZQ3 4.1G< 4.3F
FBVDDQ 12.2H
FB_CAL_PD_VDDQ 3.2G< 3.4C
FB_CAL_PU_GND 3.2G< 3.4C
FB_CAL_TERM_GND 3.2G<
FB_PLLAVDD 3.2G< 3.5C
FB_VREF_A 4.1G< 4.3D
FB_VREF_A_Q 4.1G<
FB_VREF_B 4.1G< 4.3H
FB_VREF_B_Q 4.1G<
GPIO0_DVI_A_HPD 7.1G< 7.4D
GPIO0_DVI_A_HPD_C 7.1G< 7.3F
GPIO0_DVI_A_HPD_R 7.1G< 7.4E
GPIO4_FAN_TACH 9.1G< 9.4D> 10.2E<
GPIO5_NVVDDCTL 10.2E> 13.1G< 13.5D<
GPIO5_NVVDDCTL_R 13.4E
GPIO8_THERM_OVERT* 10.2E> 11.1G< 11.2D<
GPIO9_FAN_PWM 9.1G> 9.4D< 10.2E>
GPIO19_IFPD_HPD 8.1F< 8.4D
GPIO_DP_HPD_C 8.1F< 8.4F
GPIO_DP_HPD_R 8.1F< 8.4E
GPU_PLLVDD 10.1F< 10.4C
GPU_TESTMODE 10.1G< 10.4E
I2CA_SCL 5.1G< 5.2C< 10.2E>
I2CA_SCL_C 5.1F> 5.1G> 7.3F<
I2CA_SDA 5.1G<> 5.2C<> 10.2E<>
I2CA_SDA_C 5.1G<> 5.2F<> 7.3F<>
I2CB_SCL 6.1G< 6.2C< 10.2E>
I2CB_SCL_C 6.1G< 6.2E
I2CB_SDA 6.1G<> 6.2C<> 10.2E<>
I2CB_SDA_C 6.1G< 6.2E
I2CC_SCL 10.1G< 10.2E
I2CC_SCL_R 10.1G< 10.2F
I2CC_SDA 10.1G< 10.2E
I2CC_SDA_R 10.1G< 10.2F
I2CH_SCL 10.1G< 10.3E
I2CH_SDA 10.1G< 10.3E
I2CS_SCL 10.1G< 10.2C
I2CS_SDA 10.1G< 10.2C
IFPAB_IOVDD 7.2G< 7.3C
IFPAB_PLLVDD 7.2G< 7.3C
IFPAB_RSET 7.2G< 7.3C
IFPAB_TXC 7.1G< 7.4D
IFPAB_TXC* 7.1G< 7.4D
IFPAB_TXD0 7.1G< 7.3D
IFPAB_TXD0* 7.1G< 7.3D
IFPAB_TXD1 7.1G< 7.3D
IFPAB_TXD1* 7.1G< 7.3D
IFPAB_TXD2 7.1G< 7.3D
IFPAB_TXD2* 7.1G< 7.3D
IFPAB_TXD4 7.1G< 7.3D
IFPAB_TXD4* 7.1G< 7.3D
IFPAB_TXD5 7.1G< 7.3D
IFPAB_TXD5* 7.1G< 7.3D
IFPAB_TXD6 7.1G< 7.3D
IFPAB_TXD6* 7.1G< 7.3D
IFPC_IOVDD 9.1G< 9.3B
IFPC_PLLVDD 9.1G< 9.2B
IFPD_AUX 8.1G< 8.4D
IFPD_AUX* 8.1G< 8.4D
IFPD_AUX_BYP 8.1G< 8.3D
IFPD_AUX_BYP* 8.1G< 8.2D
IFPD_AUX_C 8.1G< 8.4F
IFPD_AUX_C* 8.1G< 8.4F
IFPD_AUX_SEL 8.1F< 8.2D
IFPD_IOVDD 8.1F> 8.4C> 9.3A<
IFPD_L0 8.1G< 8.4D
IFPD_L0* 8.1G< 8.4D
IFPD_L0_C 8.1G< 8.4F
IFPD_L0_C* 8.1G< 8.4F
IFPD_L1 8.1G< 8.4D
IFPD_L1* 8.1G< 8.4D
IFPD_L1_C 8.1G< 8.4F
IFPD_L1_C* 8.1G< 8.4F
IFPD_L2 8.1G< 8.4D
IFPD_L2* 8.1G< 8.4D
IFPD_L2_C 8.1G< 8.4F
IFPD_L2_C* 8.1G< 8.4F
IFPD_L3 8.1G< 8.4D
IFPD_L3* 8.1G< 8.4D
IFPD_L3_C 8.1G< 8.4F
IFPD_L3_C* 8.1G< 8.4F
IFPD_PLLVDD 8.1F> 8.3C> 9.2A<
IFPD_RSET 8.1F< 8.4B
JTAG_TCLK 10.1G< 10.2C
JTAG_TDI 10.1G< 10.2C
JTAG_TDO 10.2C 10.2G<
JTAG_TMS 10.1G< 10.2C
JTAG_TRST* 10.2C 10.2G<

NVVDD 13.2G
NVVDD_SENSE 2.4G> 13.1G< 13.4G<
NVVDD_SENSE_R 13.1G> 13.4F
PEX_CLKREQ* 2.1E 2.1G<
PEX_PLL 13.2G
PEX_PLLVDD 2.1G< 2.5F
PEX_PRSNT 2.1C 2.1G<
PEX_REFCLK 2.2D 2.5A<
PEX_REFCLK* 2.2D 2.5A<
PEX_RST 11.1G< 11.3C
PEX_RST* 2.2D> 11.1G< 11.2E<
PEX_RST_R* 11.1G< 11.2F
PEX_RX0 2.2D 2.4A<
PEX_RX0* 2.2D 2.4A<
PEX_RX1 2.2D 2.4A<
PEX_RX1* 2.2D 2.4A<
PEX_RX2 2.2D 2.4A<
PEX_RX2* 2.3D 2.4A<
PEX_RX3 2.3D 2.4A<
PEX_RX3* 2.3D 2.4A<
PEX_RX4 2.3D 2.4A<
PEX_RX4* 2.3D 2.4A<
PEX_RX5 2.3D 2.4A<
PEX_RX5* 2.3D 2.4A<
PEX_RX6 2.3D 2.5A<
PEX_RX6* 2.3D 2.5A<
PEX_RX7 2.3D 2.5A<
PEX_RX7* 2.4D 2.5A<
PEX_RX8 2.4D 2.5A<
PEX_RX8* 2.4D 2.5A<
PEX_RX9 2.4D 2.5A<
PEX_RX9* 2.4D 2.5A<
PEX_RX10 2.4D 2.5A<
PEX_RX10* 2.4D 2.5A<
PEX_RX11 2.4D 2.5A<
PEX_RX11* 2.4D 2.5A<
PEX_RX12 2.4D 2.5A<
PEX_RX12* 2.5A< 2.5D
PEX_RX13 2.5A< 2.5D
PEX_RX13* 2.5A< 2.5D
PEX_RX14 2.5A< 2.5D
PEX_RX14* 2.5A< 2.5D
PEX_RX15 2.5A< 2.5D
PEX_RX15* 2.5A< 2.5D
PEX_SMCLK 2.1D> 10.1G< 10.3B<
PEX_SMDAT 2.2D<> 10.1G<>
10.3B<>
PEX_TCLK 2.1D> 10.2A< 10.2G<
PEX_TDI 2.1D> 10.2A< 10.2G<
PEX_TDO 2.1D< 10.2A> 10.2G>
PEX_TERMP 2.1G< 2.5F
PEX_TMS 2.1D> 10.2A< 10.2G<
PEX_TRST* 2.1D> 10.2A< 10.2G<
PEX_TSTCLK 2.5A<
PEX_TSTCLK* 2.5A<
PEX_TSTCLK_OUT 2.2E
PEX_TSTCLK_OUT* 2.2E
PEX_TX0 2.2A< 2.2E
PEX_TX0* 2.2A< 2.2E
PEX_TX1 2.2A< 2.2E
PEX_TX1* 2.2A< 2.2E
PEX_TX2 2.2A< 2.2E
PEX_TX2* 2.2A< 2.2E
PEX_TX3 2.2A< 2.3E
PEX_TX3* 2.2A< 2.3E
PEX_TX4 2.2A< 2.3E
PEX_TX4* 2.2A< 2.3E
PEX_TX5 2.2A< 2.3E
PEX_TX5* 2.2A< 2.3E
PEX_TX6 2.2A< 2.3E
PEX_TX6* 2.2A< 2.3E
PEX_TX7 2.2A< 2.3E
PEX_TX7* 2.2A< 2.3E
PEX_TX8 2.2A< 2.4E
PEX_TX8* 2.2A< 2.4E
PEX_TX9 2.3A< 2.4E
PEX_TX9* 2.3A< 2.4E
PEX_TX10 2.3A< 2.4E
PEX_TX10* 2.3A< 2.4E
PEX_TX11 2.3A< 2.4E
PEX_TX11* 2.3A< 2.4E
PEX_TX12 2.3A< 2.4E
PEX_TX12* 2.3A< 2.4E
PEX_TX13 2.3A< 2.5E
PEX_TX13* 2.3A< 2.5E
PEX_TX14 2.3A< 2.5E
PEX_TX14* 2.3A< 2.5E
PEX_TX15 2.3A< 2.5E
PEX_TX15* 2.3A< 2.5E
PEX_TXX0 2.2D 2.3A<
PEX_TXX0* 2.2D 2.3A<
PEX_TXX1 2.2D 2.3A<
PEX_TXX1* 2.2D 2.3A<
PEX_TXX2 2.2D 2.3A<
PEX_TXX2* 2.2D 2.3A<
PEX_TXX3 2.3A< 2.3D

PEX_TXX3* 2.3A< 2.3D
PEX_TXX4 2.3A< 2.3D
PEX_TXX4* 2.3A< 2.3D
PEX_TXX5 2.3A< 2.3D
PEX_TXX5* 2.3A< 2.3D
PEX_TXX6 2.3A< 2.3D
PEX_TXX6* 2.3A< 2.3D
PEX_TXX7 2.3A< 2.3D
PEX_TXX7* 2.3D 2.4A<
PEX_TXX8 2.4A< 2.4D
PEX_TXX8* 2.4A< 2.4D
PEX_TXX9 2.4A< 2.4D
PEX_TXX9* 2.4A< 2.4D
PEX_TXX10 2.4A< 2.4D
PEX_TXX10* 2.4A< 2.4D
PEX_TXX11 2.4A< 2.4D
PEX_TXX11* 2.4A< 2.4D
PEX_TXX12 2.4A< 2.4D
PEX_TXX12* 2.4A< 2.4D
PEX_TXX13 2.4A< 2.5D
PEX_TXX13* 2.4A< 2.5D
PEX_TXX14 2.4A< 2.5D
PEX_TXX14* 2.4A< 2.5D
PEX_TXX15 2.4A< 2.5D
PEX_TXX15* 2.4A< 2.5D
PEX_VDD 12.2H
PS_3V3_FUSE_FAULT 12.1G< 12.3F
PS_3V3_FUSE_ISET 12.1G< 12.3F
PS_3V3_FUSE_SLEW 12.1G< 12.3F
PS_5V_ADJ 12.1G< 12.2B
PS_FBVDDQ_BOOT 12.1G< 12.3E
PS_FBVDDQ_CP 12.1G< 12.4E
PS_FBVDDQ_CP_RC 12.1G< 12.4E
PS_FBVDDQ_EN 12.1G< 12.5C
PS_FBVDDQ_EN* 12.1G< 12.5C
PS_FBVDDQ_FB 12.1G< 12.4E
PS_FBVDDQ_FB_RC 12.1G< 12.4G
PS_FBVDDQ_FS 12.1G< 12.4D
PS_FBVDDQ_LG 12.1G< 12.4E
PS_FBVDDQ_PHASE 12.1G< 12.4E
PS_FBVDDQ_PVCCS 12.1G< 12.3E
PS_FBVDDQ_RC 12.1G< 12.4G
PS_FBVDDQ_UG 12.1G< 12.4E
PS_FBVDDQ_UG_R 12.1G< 12.3F
PS_FBVDDQ_VCC5 12.1G< 12.3D
PS_FBVDDQ_VCC12 12.1G< 12.3E
PS_NVDD_BOOT 13.1G< 13.3C
PS_NVDD_CP 13.1G< 13.3C
PS_NVDD_CP_RC 13.1G< 13.4D
PS_NVDD_EN* 13.1G< 13.4B
PS_NVDD_FB 13.1G< 13.3C
PS_NVDD_FB_RC 13.1G< 13.4F
PS_NVDD_FS 13.1G< 13.3C
PS_NVDD_LDO 13.1G< 13.3C
PS_NVDD_LG 13.1G< 13.3C
PS_NVDD_LG_D 13.1G< 13.3D
PS_NVDD_LG_R 13.1G< 13.4E
PS_NVDD_PHASE 13.1G< 13.3C
PS_NVDD_PVCCS 13.1G< 13.3C
PS_NVDD_RC 13.1G< 13.4F
PS_NVDD_UG 13.1G< 13.3C
PS_NVDD_UG_R 13.1G< 13.3E
PS_NVDD_VCC5 13.1G< 13.3C
PS_NVDD_VCC12 13.1G< 13.3C
PS_PEX_CP 12.1G< 12.4C
PS_PEX_DR 12.1G< 12.3D
PS_PEX_DR_R 12.1G< 12.3B
PS_PEX_FB 12.1G< 12.4D
PS_PEX_PLL_ADJ 13.1E 13.2G<
ROM_CS* 10.1G< 10.3E
ROM_SCLK 10.3E< 11.1G> 11.4A>
11.4B
ROM_SI 10.3E< 11.1G> 11.3A>
11.3B
ROM_SO 10.3E< 11.1G> 11.3A>
11.3B
ROM_VCC 10.2F
SNN_3V3_AUX 2.1C
SNN_AOZ_7 12.3G
SNN_A_ID0 5.4G
SNN_A_ID2 5.4F
SNN_BUFRST* 10.3E
SNN_CAL_TERM_GND 3.4C
SNN_CEC 10.4E
SNN_DP_CEC 8.4G
SNN_FBA1_NC_A1 4.3A
SNN_FBA1_NC_A11 4.3A
SNN_FBA1_NC_J2 4.2A
SNN_FBA1_NC_J10 4.2A
SNN_FBA1_NC_L2 4.2A
SNN_FBA1_NC_L10 4.2A
SNN_FBA1_NC_M8 4.2A
SNN_FBA1_NC_T1 4.3A
SNN_FBA1_NC_T8 4.2A
SNN_FBA1_NC_T11 4.3A
SNN_FBA2_NC_A1 4.3A

SNN_FBA2_NC_A11 4.3C
SNN_FBA2_NC_J2 4.2C
SNN_FBA2_NC_J10 4.2C
SNN_FBA2_NC_L2 4.2C
SNN_FBA2_NC_L10 4.2C
SNN_FBA2_NC_M8 4.2C
SNN_FBA2_NC_T1 4.3C
SNN_FBA2_NC_T8 4.2C
SNN_FBA2_NC_T11 4.3C
SNN_FBA3_NC_A1 4.3E
SNN_FBA3_NC_A11 4.3E
SNN_FBA3_NC_J2 4.2E
SNN_FBA3_NC_J10 4.2E
SNN_FBA3_NC_L2 4.2E
SNN_FBA3_NC_L10 4.2E
SNN_FBA3_NC_M8 4.2E
SNN_FBA3_NC_T1 4.3E
SNN_FBA3_NC_T8 4.2E
SNN_FBA3_NC_T11 4.3E
SNN_FBA4_NC_A1 4.3F
SNN_FBA4_NC_A11 4.3F
SNN_FBA4_NC_J2 4.2F
SNN_FBA4_NC_J10 4.2F
SNN_FBA4_NC_L2 4.2F
SNN_FBA4_NC_L10 4.2F
SNN_FBA4_NC_M8 4.2F
SNN_FBA4_NC_T1 4.3F
SNN_FBA4_NC_T8 4.2F
SNN_FBA4_NC_T11 4.3F
SNN_FB_VREF 3.5B
SNN_GPIO2 10.2E
SNN_GPIO3 10.2E
SNN_GPIO6 10.2E
SNN_GPIO7 10.2E
SNN_GPIO10 10.2E
SNN_GPIO11 10.2E
SNN_GPIO12 10.2E
SNN_GPIO13 10.2E
SNN_GPIO14 10.2E
SNN_GPIO17 10.3E
SNN_GPIO18 10.3E
SNN_GPU_AA6 10.3C
SNN_GPU_C15 9.2H
SNN_GPU_D15 9.2H
SNN_GPU_J5 9.2H
SNN_GPU_N3 10.3C
SNN_GPU_T6 10.3C
SNN_GPU_W6 10.3C
SNN_GPU_Y6 10.3C
SNN_HDCP_2 10.4G
SNN_IFPAB_TXD3 7.3D
SNN_IFPAB_TXD3* 7.3D
SNN_IFPAB_TXD7 7.4D
SNN_IFPAB_TXD7* 7.3D
SNN_IFPB_TXC 7.4D
SNN_IFPB_TXC* 7.4D
SNN_IFPC_AUX 9.3C
SNN_IFPC_AUX* 9.2C
SNN_IFPC_HPD 9.3C
SNN_IFPC_L0 9.3C
SNN_IFPC_L0* 9.3C
SNN_IFPC_L1 9.3C
SNN_IFPC_L1* 9.3C
SNN_IFPC_L2 9.3C
SNN_IFPC_L2* 9.3C
SNN_IFPC_L3 9.3C
SNN_IFPC_L3* 9.3C
SNN_IFPC_RSET 9.2B
SNN_IFPE_AUX 9.4C
SNN_IFPE_AUX* 9.4C
SNN_IFPE_HPD 9.4C
SNN_IFPE_L0 9.4C
SNN_IFPE_L0* 9.4C
SNN_IFPE_L1 9.4C
SNN_IFPE_L1* 9.4C
SNN_IFPE_L2 9.4C
SNN_IFPE_L2* 9.4C
SNN_IFPE_L3 9.4C
SNN_IFPE_L3* 9.4C
SNN_IFPE_RSET 9.3B
SNN_PEX_WAKE* 2.2D
SNN_PE_PRSNT2_A 2.1C
SNN_PE_PRSNT2_B 2.2C
SNN_PE_PRSNT2_C 2.3C
SNN_PE_RSVD1 2.2C
SNN_PE_RSVD2 2.2C
SNN_PE_RSVD3 2.2C
SNN_PE_RSVD4 2.2C
SNN_PE_RSVD5 2.3C
SNN_PE_RSVD6 2.4C
SNN_PE_RSVD7 2.4C
SPDIF 10.1G< 10.4C
STRAP0 10.3C< 11.1G> 11.5A>
11.5B
STRAP1 10.3C< 11.1G> 11.4A>
11.4B

STRAP2 10.3C< 11.1G> 11.4A>
11.4B
STRAP_REF0 10.1G< 10.3C
STRAP_REF1 10.1G< 10.3C
THERMDA 10.1G< 10.2C
THERMDC 10.1C 10.1G<
THERM_N 11.1G< 11.2C
THERM_N_R 11.1G< 11.2B
THERM_P* 11.1G< 11.2C
THERM_P_Q 11.1G< 11.2B
THERM_SHUTDOWN* 11.1G> 11.2A> 13.4A<
XTALOUTBUFF 10.1F< 10.5E
XTALSSIN 10.1F< 10.5C
XTAL_IN 10.1F< 10.5C
XTAL_OUT 10.1F< 10.5D

NVIDIA-RMA 罗金林 20091201

NVIDIA CORPORATION
2701 SAN TOMAS EXPRESSWAY
SANTA CLARA, CA 95050, USA

NV_PN	600-10690-BASE-000 A
ID	
PAGE	
NAME	<ENGINEER>
DATE	01-DEC-2008

ASSEMBLY	BASE LEVEL GENERIC SCHEMATIC ONLY, COMMON & NO_STUFF ASSEMBLY NOTES AND BOM NOT FINAL
PAGE DETAIL	<edit here to insert page detail>

ALL NVIDIA DESIGN SPECIFICATIONS, REFERENCE SPECIFICATIONS, REFERENCE BOARDS, FILES, DRAWINGS, DIAGNOSTICS, LISTS AND OTHER DOCUMENTS OR INFORMATION (TOGETHER AND SEPARATELY, "MATERIALS") ARE BEING PROVIDED 'AS IS'. THE MATERIALS MAY CONTAIN KNOWN AND UNKNOWN VIOLATIONS OR DEVIATIONS OF INDUSTRY STANDARDS AND SPECIFICATIONS. NVIDIA MAKES NO WARRANTIES, EXPRESSED, IMPLIED, STATUTORY OR OTHERWISE WITH RESPECT TO THE MATERIALS OR OTHERWISE, AND EXPRESSLY DISCLAIMS ALL IMPLIED WARRANTIES INCLUDING, WITHOUT LIMITATION, THE WARRANTIES OF DESIGN, OF NONINFRINGEMENT, MERCHANTABILITY OR FITNESS FOR A PARTICULAR PURPOSE, OR ARISING FROM A COURSE OF DEALING, TRADE USAGE, TRADE PRACTICE, OR INDUSTRY STANDARDS.

Title: Cref Part
Report:
Design: design
Date: Dec 1
21:48:15 2008

BKT1 [9.3E]
C1 [8.4E]
C2 [8.4E]
C3 [8.4E]
C4 [8.4E]
C5 [5.5B]
C6 [5.5C]
C7 [8.5E]
C8 [12.2B]
C9 [8.4E]
C10 [8.4E]
C11 [8.4E]
C12 [8.4E]
C13 [8.5E]
C14 [6.4F]
C15 [12.3C]
C16 [12.4A]
C17 [8.4F]
C18 [12.3B]
C19 [12.3B]
C20 [12.4A]
C21 [12.2A]
C22 [12.4A]
C23 [12.4B]
C24 [11.3B]
C25 [2.1B]
C26 [9.4E]
C27 [11.2C]
C28 [13.2G]
C29 [8.2D]
C30 [8.3D]
C31 [6.4E]
C32 [11.3C]
C33 [13.4F]
C34 [13.2G]
C35 [13.3C]
C36 [12.3E]
C37 [13.2D]
C38 [6.4E]
C39 [13.2E]
C40 [12.3D]
C41 [12.4F]
C42 [13.3F]
C43 [12.3E]
C44 [13.2F]
C45 [13.2F]
C46 [6.5E]
C47 [13.2G]
C48 [13.2F]
C49 [13.2G]
C50 [13.4F]
C51 [12.4G]
C52 [12.2D]
C53 [2.1A]
C54 [2.1B]
C55 [2.1B]
C56 [12.3G]
C57 [13.4E]
C58 [10.3B]
C59 [13.4G]
C60 [12.2D]
C61 [12.4H]
C62 [12.4H]
C63 [12.4H]
C64 [12.4H]
C65 [10.5E]
C66 [13.3G]
C67 [10.5C]
C68 [13.1F]
C69 [13.1F]
C70 [5.3B]
C71 [13.1E]
C72 [5.2B]
C73 [5.2B]
C74 [5.3B]
C75 [11.3F]
C76 [5.4B]
C77 [8.4A]
C78 [7.3C]
C79 [8.4A]
C80 [7.3B]
C81 [2.2G]
C82 [2.1G]
C83 [10.4G]
C84 [2.5F]
C85 [2.5G]
C86 [10.3G]
C87 [4.4G]
C88 [4.5F]

C89 [4.5G]
C90 [3.5F]
C91 [3.5E]
C92 [3.5F]
C93 [3.5G]
C94 [3.5G]
C95 [3.5F]
C96 [3.5G]
C501 [3.5F]
C502 [4.5F]
C503 [4.4F]
C504 [4.4G]
C505 [4.4F]
C506 [4.5F]
C507 [4.4F]
C508 [4.5G]
C509 [4.5F]
C510 [4.3D]
C511 [8.4E]
C512 [4.5F]
C513 [4.5G]
C514 [4.3H]
C515 [4.5G]
C516 [4.4G]
C517 [4.4F]
C518 [4.4F]
C519 [4.5G]
C520 [4.5G]
C521 [4.5G]
C522 [4.4F]
C523 [4.4G]
C524 [4.5F]
C525 [4.5F]
C526 [4.4F]
C527 [4.4G]
C528 [4.4G]
C529 [2.5G]
C530 [2.5G]
C531 [2.5G]
C532 [2.5G]
C533 [2.5G]
C534 [2.5G]
C535 [2.4G]
C536 [2.4G]
C537 [3.2G]
C538 [3.1G]
C539 [2.4G]
C540 [3.5C]
C541 [3.2C]
C542 [2.4G]
C543 [3.1G]
C544 [2.3G]
C545 [2.2F]
C546 [2.3G]
C547 [2.3G]
C548 [3.2G]
C549 [2.1F]
C550 [3.1G]
C551 [3.1C]
C552 [2.4G]
C553 [2.2G]
C554 [2.4G]
C555 [2.2G]
C556 [2.2F]
C557 [2.3F]
C558 [2.4G]
C559 [2.4G]
C560 [2.3G]
C561 [2.4G]
C562 [2.3G]
C563 [2.3F]
C564 [2.1G]
C565 [2.4G]
C566 [3.2G]
C567 [2.3F]
C568 [5.4A]
C569 [5.4A]
C570 [2.2G]
C571 [6.4B]
C572 [2.4G]
C573 [2.1G]
C574 [7.3B]
C575 [2.4G]
C576 [8.4B]
C577 [10.4C]
C578 [8.4B]
C579 [8.4B]
C580 [10.4C]
C581 [8.4B]
C582 [7.3B]
C583 [2.3G]
C584 [8.4B]
C585 [8.2C]
C586 [10.4C]
C587 [8.4A]
C588 [2.3G]

C589 [8.3C]
C590 [10.2F]
C591 [2.3D]
C592 [2.3D]
C593 [10.2B]
C594 [2.3D]
C595 [2.3D]
C596 [2.3D]
C597 [2.3D]
C598 [8.2C]
C599 [8.3C]
C600 [2.3D]
C601 [2.3D]
C602 [2.2D]
C603 [2.2D]
C604 [2.2D]
C605 [2.2D]
C606 [2.2D]
C607 [2.2D]
C608 [13.3E]
C609 [12.4E]
C610 [6.5C]
C611 [2.1B]
C612 [13.4E]
C613 [13.4D]
C614 [13.3D]
C615 [12.4C]
C616 [12.5F]
C617 [12.5C]
C618 [12.5E]
C619 [12.5G]
C620 [6.5C]
C621 [12.3E]
C622 [13.4B]
C623 [8.3F]
C624 [12.3E]
C625 [12.3F]
C626 [12.3G]
C627 [12.3G]
C628 [5.3C]
C629 [6.5B]
C630 [5.5E]
C631 [7.4E]
C632 [5.4E]
C633 [7.2G]
C634 [5.4E]
CN1 [2.3C]
D1 [5.2E]
D2 [5.3E]
D3 [5.2E]
D4 [5.3E]
D5 [8.3E]
D6 [8.3E]
D7 [8.3G]
D8 [6.2E]
D9 [8.2F]
D10 [8.3F]
D11 [8.2E]
D12 [8.4E]
D13 [8.4E]
D14 [6.5E]
D15 [10.3B]
D16 [10.3B]
D17 [10.2G]
D501 [13.3D]
D502 [9.4E]
D503 [5.4E]
D504 [7.4E]
D505 [8.5E]
D506 [5.4E]
D507 [5.5E]
F501 [12.2G]
F502 [12.2B]
G1 [2.3F]
G1 [3.3C]
G1 [5.4C]
G1 [8.4C]
G1 [7.3D]
G1 [8.4C]
G1 [9.4C 9.3G 9.3C]
G1 [10.4D 10.2D 10.3D]
J1 [5.4G]
J2 [8.4G]
J3 [7.3G]
J4 [6.4G]
J5 [9.4F]
J6 [9.4E]
JS01 [10.2A]
L1 [6.4E]
L2 [8.4E]
L3 [8.5E]
L4 [12.4G]
L5 [12.3G]
L6 [13.3F]

L7 [13.3F]
L8 [13.3F]
L9 [13.4F]
L10 [2.5G]
L11 [2.5G]
L501 [5.4E]
L502 [5.5E]
L503 [5.4E]
LB1 [8.4F]
LB2 [12.2D]
LB3 [12.3A]
LB4 [12.3A]
LB5 [7.3B]
LB6 [8.4B]
LB501 [3.5D]
LB502 [7.3B]
LB503 [10.4B]
LB504 [10.4B]
LB505 [8.4A]
LB506 [8.3A]
LB507 [7.4F]
M1 [4.2B 4.4C 4.5B]
M2 [4.4B 4.5C 4.2C]
M3 [4.5E 4.2F 4.4D]
M4 [4.4E 4.2G 4.5D]
MEC1 [9.3D]
MEC2 [9.2F]
MEC3 [9.3F]
MEC4 [9.3F]
MEC5 [9.3F]
MEC6 [9.3F]
Q1 [8.3G]
Q2 [12.3B]
Q3 [8.3F]
Q4 [8.2E]
Q5 [8.3E]
Q6 [8.2D]
Q7 [8.3D]
Q8 [11.2C]
Q9 [11.2B]
Q10 [13.5E]
Q11 [11.2C]
Q12 [12.4F 12.3F]
Q13 [13.3E]
Q14 [13.3E]
Q15 [11.2G]
Q16 [11.2F]
Q501 [13.4B]
Q502 [12.5D]
Q503 [12.5C]
Q504 [13.4B]
R1 [5.2D]
R2 [5.3D]
R3 [5.2D]
R4 [5.2D]
R5 [5.3D]
R6 [5.2D]
R7 [5.3D]
R8 [5.3D]
R9 [8.2E]
R10 [8.3E]
R11 [8.3G]
R12 [8.2D]
R13 [8.2D]
R14 [8.2E]
R15 [8.3E]
R16 [8.2G]
R17 [8.2F]
R18 [12.2B]
R19 [12.2B]
R20 [6.2D]
R21 [11.2C]
R22 [6.2D]
R23 [11.2B]
R24 [11.3C]
R25 [11.2C]
R26 [8.3D]
R27 [8.3D]
R28 [13.5D]
R29 [13.4F]
R30 [6.4E]
R31 [13.4F]
R32 [11.2C]
R33 [13.4F]
R34 [13.4E]
R35 [13.4D]
R36 [13.3C]
R37 [13.4G]
R38 [12.3D]
R39 [12.4B]
R40 [13.2C]
R41 [6.4E]

R42 [12.3D]
R43 [6.5E]
R44 [13.3F]
R45 [12.4G]
R46 [13.4G]
R47 [12.2D]
R48 [2.1D]
R49 [13.2F]
R50 [13.1F]
R51 [11.2F]
R52 [10.3B]
R53 [10.3B]
R54 [11.3G]
R55 [10.2C]
R56 [10.2C]
R57 [10.2F]
R58 [5.4B]
R59 [10.4F]
R60 [10.4F]
R61 [10.4C]
R62 [11.4B]
R63 [11.4B]
R64 [2.2D]
R65 [11.3B]
R66 [11.3B]
R67 [11.3B]
R68 [11.3B]
R69 [10.3F]
R70 [3.4D]
R71 [3.4D]
R501 [3.3E]
R502 [4.3C]
R503 [4.3A]
R504 [4.3E]
R505 [3.3F]
R506 [3.2F]
R507 [4.5A]
R508 [4.5A]
R509 [3.2F]
R510 [3.3F]
R511 [4.3F]
R512 [4.3D]
R513 [4.3H]
R514 [4.3H]
R515 [4.3D]
R516 [10.4E]
R517 [10.3C]
R518 [10.3C]
R519 [10.5E]
R520 [10.5C]
R521 [2.5G]
R522 [2.1E]
R523 [9.2A]
R524 [6.4B]
R525 [9.3A]
R526 [8.4B]
R527 [11.4B]
R528 [11.4B]
R529 [7.3C]
R530 [11.4B]
R531 [5.4D]
R532 [11.4B]
R533 [5.5D]
R534 [5.4D]
R535 [11.5B]
R536 [11.5B]
R537 [6.4C]
R538 [10.2B]
R539 [10.2E]
R540 [6.4D]
R541 [6.5D]
R542 [10.2B]
R543 [10.2F]
R544 [10.2B]
R545 [10.2E]
R546 [10.2B]
R547 [10.2B]
R548 [10.2B]
R549 [10.2B]
R550 [13.3D]
R551 [13.3D]
R552 [13.4D]
R553 [12.3E]
R554 [13.3C]
R555 [13.4B]
R556 [12.4B]
R557 [12.5C]
R558 [13.4E]
R559 [12.5C]
R560 [12.4C]
R561 [12.4D]
R562 [12.5C]
R563 [12.5F]
R564 [12.3C]
R565 [12.5G]
R566 [12.5G]

R567 [12.5G]
R568 [13.4A]
R569 [12.3F]
R570 [13.4A]
R571 [9.4E]
R572 [9.4E]
R573 [12.3F]
R574 [8.4E]
R575 [12.4C]
R576 [8.4E]
R577 [9.3D]
R578 [8.3D]
R579 [7.4E]
R580 [5.4E]
R581 [6.2D]
R582 [7.4E]
R583 [5.4E]
R584 [6.3D]
R585 [5.5E]
RP1 [10.2B 10.2B 10.2B 10.2B]
RP2 [3.4H 3.4G 3.4H 3.4G]
RP3 [3.4F 3.4G 3.4G 3.4F]
RP4 [3.4H 3.4H 3.4G 3.4G]
RP5 [3.3F 3.3F 3.3F 3.3F]
RP6 [3.4F 3.3G 3.3G 3.4F]
RP7 [3.4F 3.4F 3.4F 3.4F]
RP8 [3.3G 3.3H 3.3G 3.3H]
RP9 [3.3G 3.3H 3.3G 3.3H]
RP501 [3.2G 3.2G 3.2H 3.2H]
RP502 [3.5H 3.5H 3.4F 3.4F]
RP503 [3.3H 3.4F 3.3H 3.4F]
RP504 [3.4H 3.3H 3.3H 3.4H]
RP505 [3.3G 3.4H 3.4H 3.3G]
TP501 [3.4D]
TP502 [10.2C]
TP503 [10.2C]
U1 [5.3D 5.3D]
U1 [6.3D 6.3D]
U2 [12.2B]
U3 [13.1E]
U501 [10.3G]
U502 [10.4G]
U503 [10.2G]
U504 [12.4D]
U505 [13.3C]
U506 [12.3G]
Y1 [10.5D]

MIS-RMA
羅鏡祥
20091201

ASSEMBLY	BASE LEVEL GENERIC SCHEMATIC ONLY, COMMON & NO_STUFF ASSEMBLY NOTES AND BOM NOT FINAL
PAGE DETAIL	<edit here to insert page detail>

ALL NVIDIA DESIGN SPECIFICATIONS, REFERENCE SPECIFICATIONS, REFERENCE BOARDS, FILES, DRAWINGS, DIAGNOSTICS, LISTS AND OTHER DOCUMENTS OR INFORMATION (TOGETHER AND SEPARATELY, 'MATERIALS') ARE BEING PROVIDED 'AS IS'. THE MATERIALS MAY CONTAIN KNOWN AND UNKNOWN VIOLATIONS OR DEVIATIONS OF INDUSTRY STANDARDS AND SPECIFICATIONS. NVIDIA MAKES NO WARRANTIES, EXPRESSED, IMPLIED, STATUTORY OR OTHERWISE WITH RESPECT TO THE MATERIALS OR OTHERWISE, AND EXPRESSLY DISCLAIMS ALL IMPLIED WARRANTIES INCLUDING, WITHOUT LIMITATION, THE WARRANTIES OF DESIGN, OF NONINFRINGEMENT, MERCHANTABILITY OR FITNESS FOR A PARTICULAR PURPOSE, OR ARISING FROM A COURSE OF DEALING, TRADE USAGE, TRADE PRACTICE, OR INDUSTRY STANDARDS.

NVIDIA CORPORATION
2701 SAN TOMAS EXPRESSWAY
SANTA CLARA, CA 95050, USA

NV_PN	600-10690-BASE-000 A		
ID		PAGE	
NAME	<ENGINEER>	DATE	01-DEC-2008