MS-V089 -- G73GT/G84, 128/256 MB 16x32 DDR3-136pin, DVI-I,SD/HDTV,VIVO,HDMI

SUMMARY:

1. Base on V069-100 to Modify HDMI change to internal support
2. BGA-136 DDRIII
3. RT-8805 Two Phase PWM for NVVDD
4. MS-11 for FBVDD

Table of Contents:

Page 1: TITLE
Page 2: PCIe INTERFACE
Page 3: FBA INTERFACE
Page 4: FB A1
Page 5: FBA DECOUPLING
Page 6: FB A2
Page 7: FBC INTERFACE
Page 8: FB C1
Page 9: FBC DECOUPLING
Page 10: FB C2
Page 11: MIOA/MIOB
Page 12: DACC
Page 13: DACA
Page 14: DACB
Page 15: VIDEO CAPTURE
Page 16: TMDS LINK A & B
Page 17: TMDS LINK C & D
Page 18: 4-Pin Video-In/SPDIF IN
Page 19: GPIO/ROM/HDCP ROM
Page 20: Straps/Mechanical
Page 21: Linear Power
Page 22: NVVDD with 8805
Page 23: FBVDD with MS-11 MS-V1

Rev History

OA

Page 3 Enable G23pin H_PLLVDD 1V2 for G84 only
Page 11 reserve G84 SLI circuit
Page 12,13,14 reserve DAC_Vref power for G84 DACA,B,C
Page 16 reserve 1V8 for G84 IFPAB_PLLVDD
Page 17 reserve 1V8 for G84 IFPCD_PLLVDD
Page 18 reserve 1V2 for G84 PLLVDD and VID_PLLVDD
Page 20 reserve MIOB_CTL3 new strap for G84 PCI_DEVID_4
Page 20 reserve ROM_SI pull-down resister required if MIOA VDDQ=2.5V for G84
Page 21add 1V8 power for G84
Page 22,23 Reserve MS-V1co-lay circuit

100

Page 3 H_PLLVDD 1V2 use 0ohm connect to PEX1V2
Page 3 Reserve G84 Dual Rank(Stacked Die) circuit FBA_CMD7----CS1 FBA_CMD27---BA2
Page 7 Reserve G84 Dual Rank(Stacked Die) circuit FBC_CMD7----CS1 FBC_CMD27---BA2
Page 7 Reserve I2CS citcuit for G84
Page 6,10 Enable FBAA2 and FBCC2 BA2 Pin this is for Stacked Die Function
Page 13 Modify RGB circuit
Page 15 Modify SAA7115 RESET circuit
Page 18 Modify Spidf circuit
Page 21 Modify Linear Power circuit
Page 22 NVVDD PWM Change to RT-8805 Two Phase
Page 22,23 Remove MS-V1co-lay circuit

110

Page 3 Connect FBVDD for G84
Page 18 Reverve other Spidf circuit
Page 22 Co-lay small chock for NVVDD

120

Remove all G73 co-lay circuit
Page 18 Spidf circuit add 100K R for fix noise

130

Change HDMI Conn to DVI-I

00029980 FOR RMA(丁德基) ONLY
MSI 顏鑫 CONFIDENTIAL RD(C)20111024002

Micro-Star International Co., LTD.		
SUMMARY		
Size Custom	Document Number MS-V089	Rev 120
Date: Tuesday, April 03, 2007	Sheet 1 of 23	

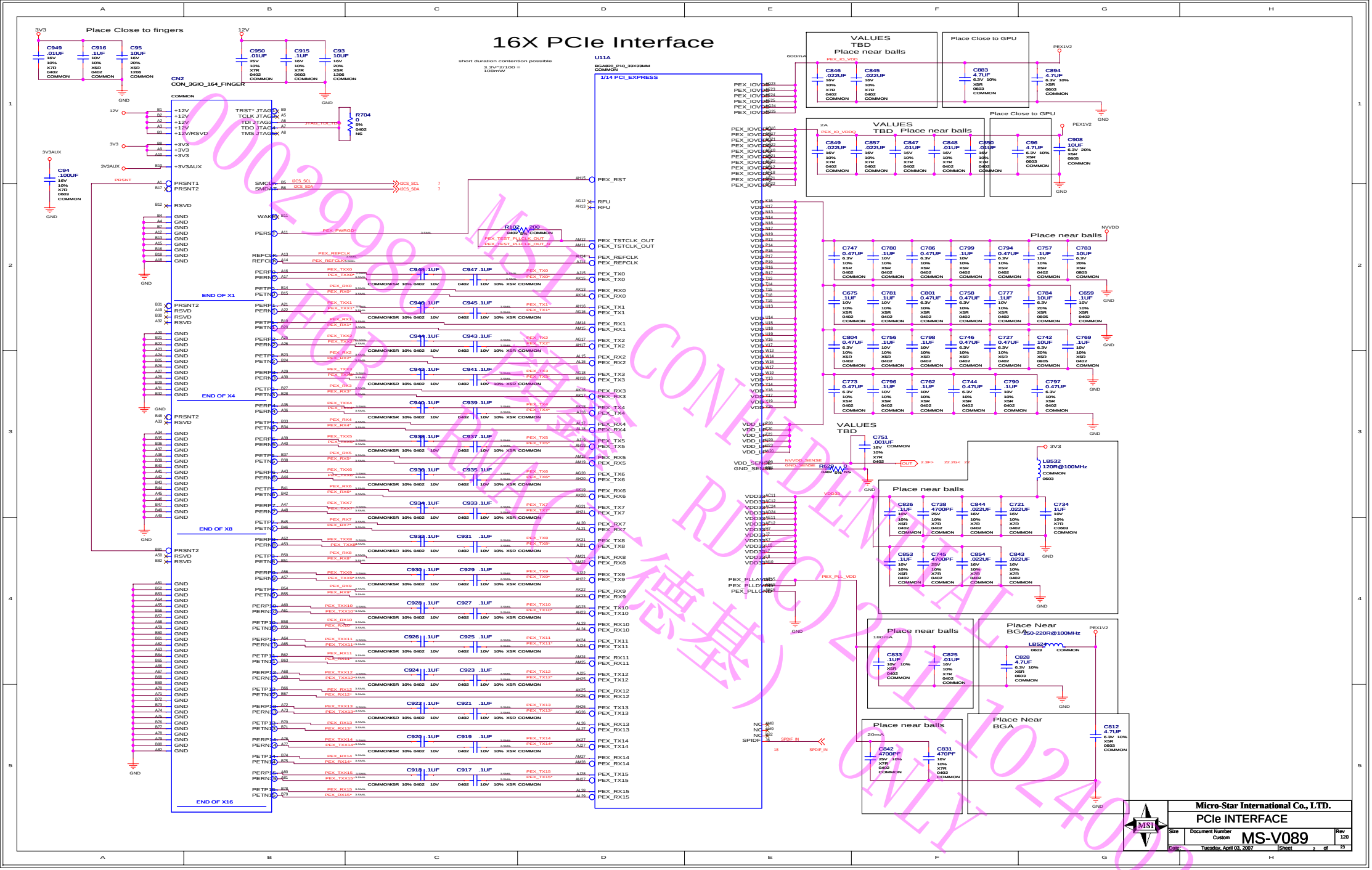
16X PCIe Interface
short duration contention possible
3.3V^2/100 = 108mW
U11A
BGA820_P10_33X33MM
COMMON
1/14 PCI_EXPRESS
CN2
CON_3GIO_164_FINGER
Place Close to fingers
VALUES
TBD
Place near balls
Place Close to GPU
Place near balls
Place Near BGA
Place Near BGA
END OF X1
END OF X4
END OF X8
END OF X16
Micro-Star International Co., LTD.
PCIe INTERFACE
Size
Document Number
Custom
MS-V089
Rev
120
Date:
Tuesday, April 03, 2007
Sheet
2
of
23

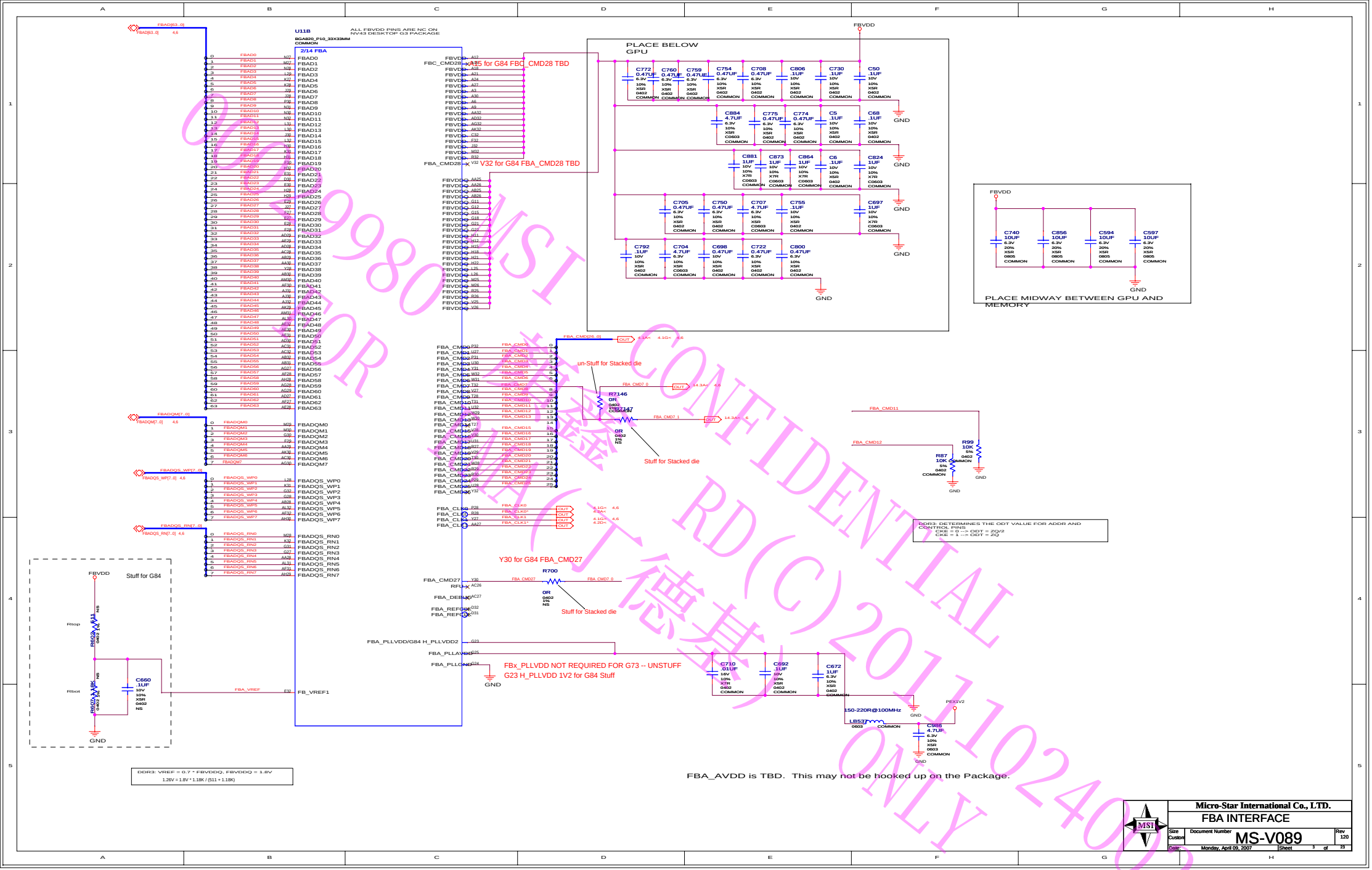

CONFIDENTIAL
RD(C)20111024002
ONLY

FrameBuffer: Partition A
16Mx32 BGA136 DDR3

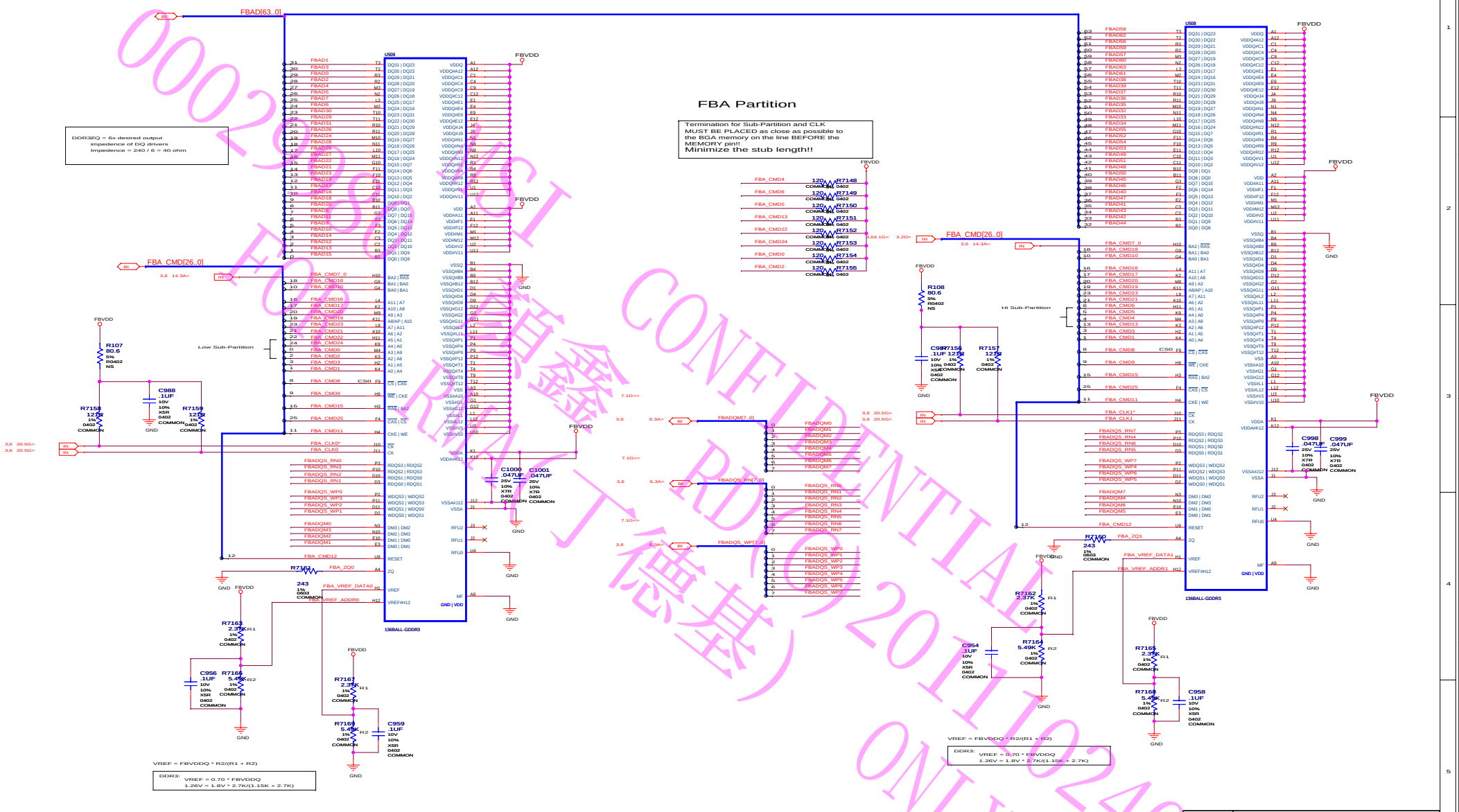

00029098 FOR RMA 用途 CONFIDENTIAL RD(C) 2011/10/24002 ONLY

Micro-Star International Co., LTD.		
FB A1		
Size: Custom	Document Number: MS-V089	Rev: 110
Date: Tuesday, April 03, 2007	Sheet 4 of 23	

FRAME BUFFER: PARTITION A DECOUPLING

Decoupling for FBA 0..31

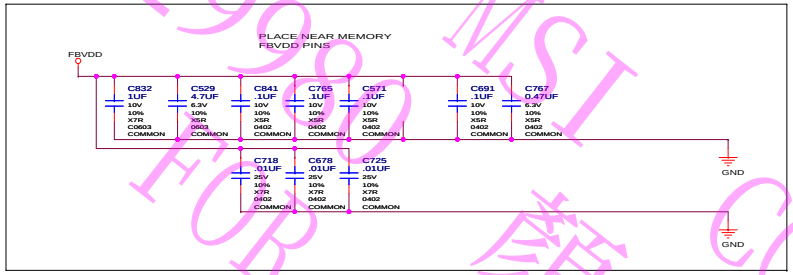

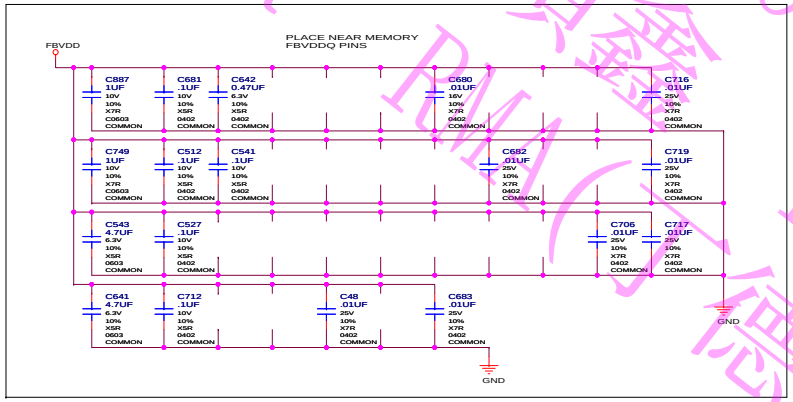

Decoupling for FBA 32..63

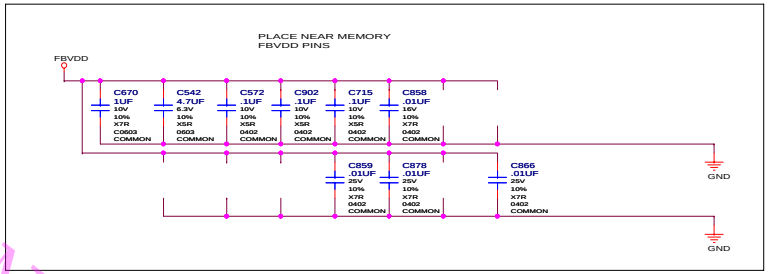

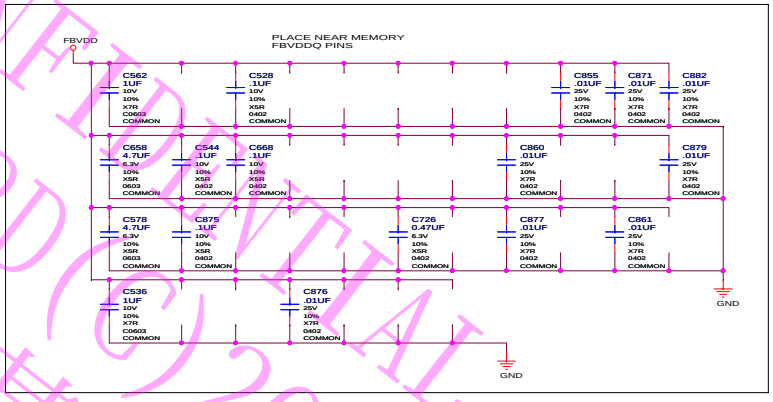

000299809 MSI CONFIDENTIAL
FOR RMA(含德基) ONLY
鎮鑫 ID(C)20111024002

Micro-Star International Co., LTD.		
FBA DECOUPLING		
Size: Custom	Document Number: MS-V089	Rev: 100
Date: Tuesday, April 03, 2007	Sheet 5 of 23	

FrameBuffer: Partition A
16Mx32 BGA136 DDR3

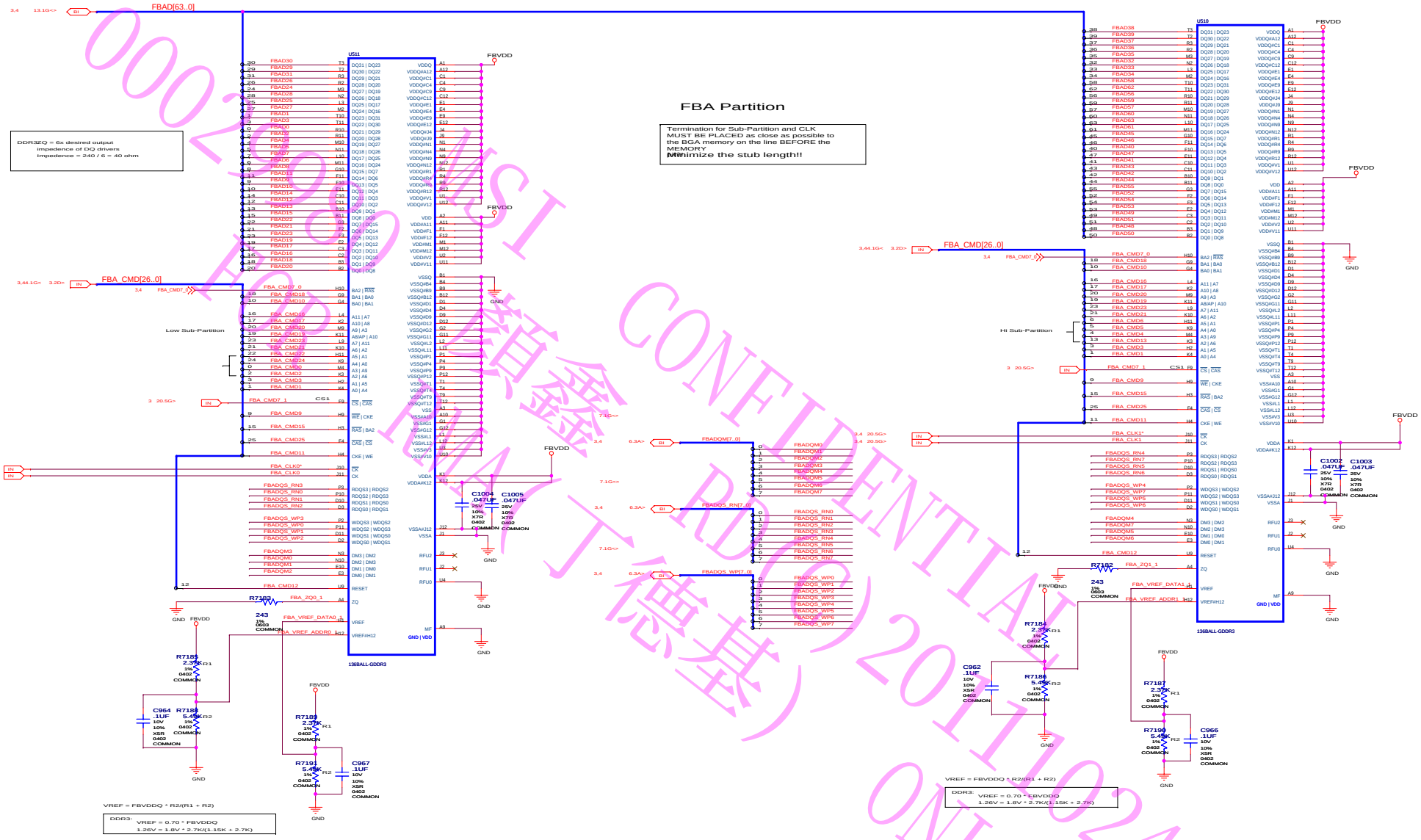

0002000 MSI
CONFIDENTIAL
RD(20)20110240 02
ONLY

Micro-Star International Co., LTD.

FB A2

Size	Document Number	Rev
Custom	MS-V089	110

Date: Tuesday, April 10, 2007 Sheet 6 of 23

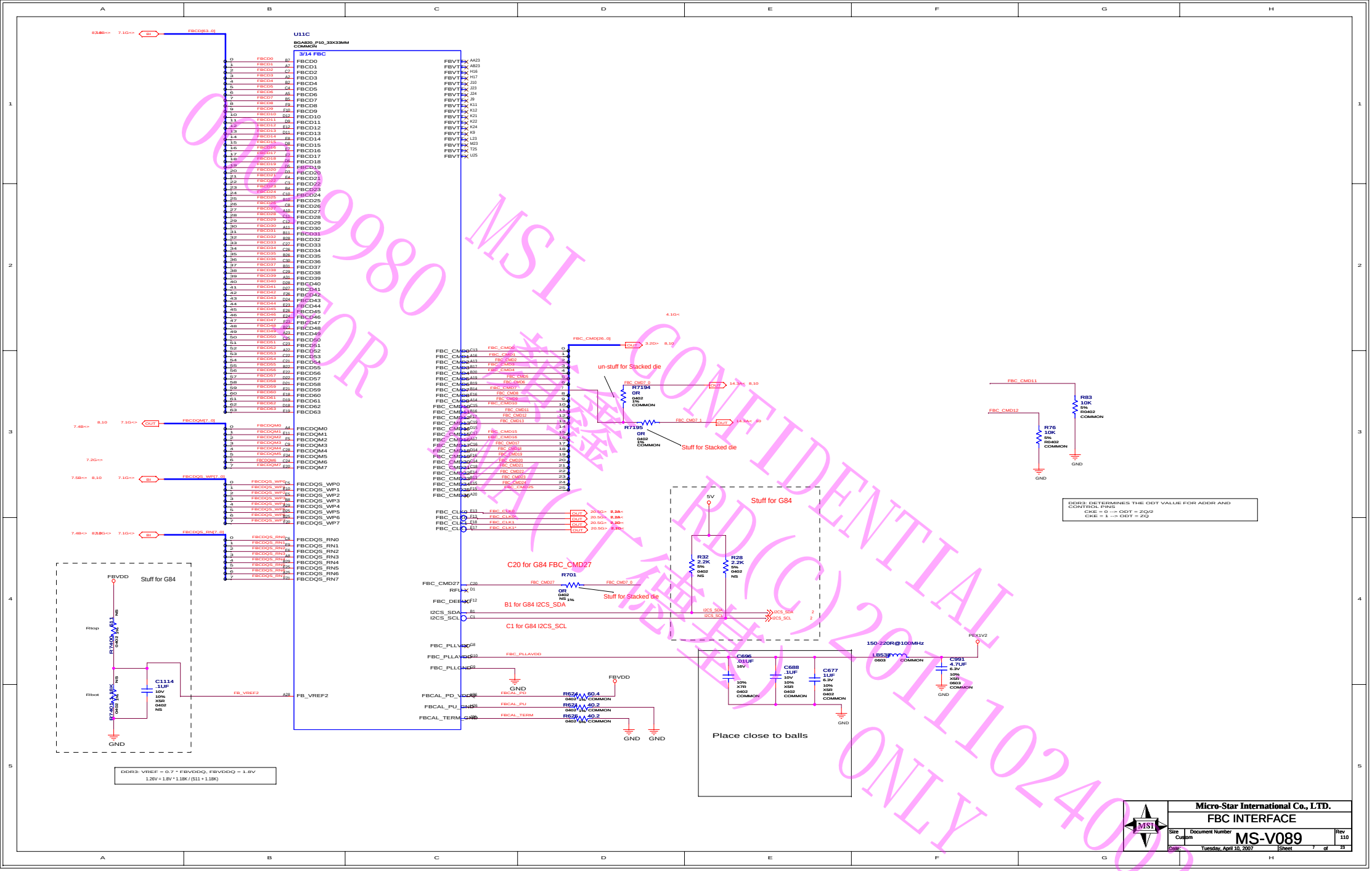

MSI CONFIDENTIAL
RD(C)20111024002
ONLY
MSI 華碩 MA(1)
06009980 FOR

FRAMEBUFFER: PARTITION
C 16Mx32 BGA136 DDR3

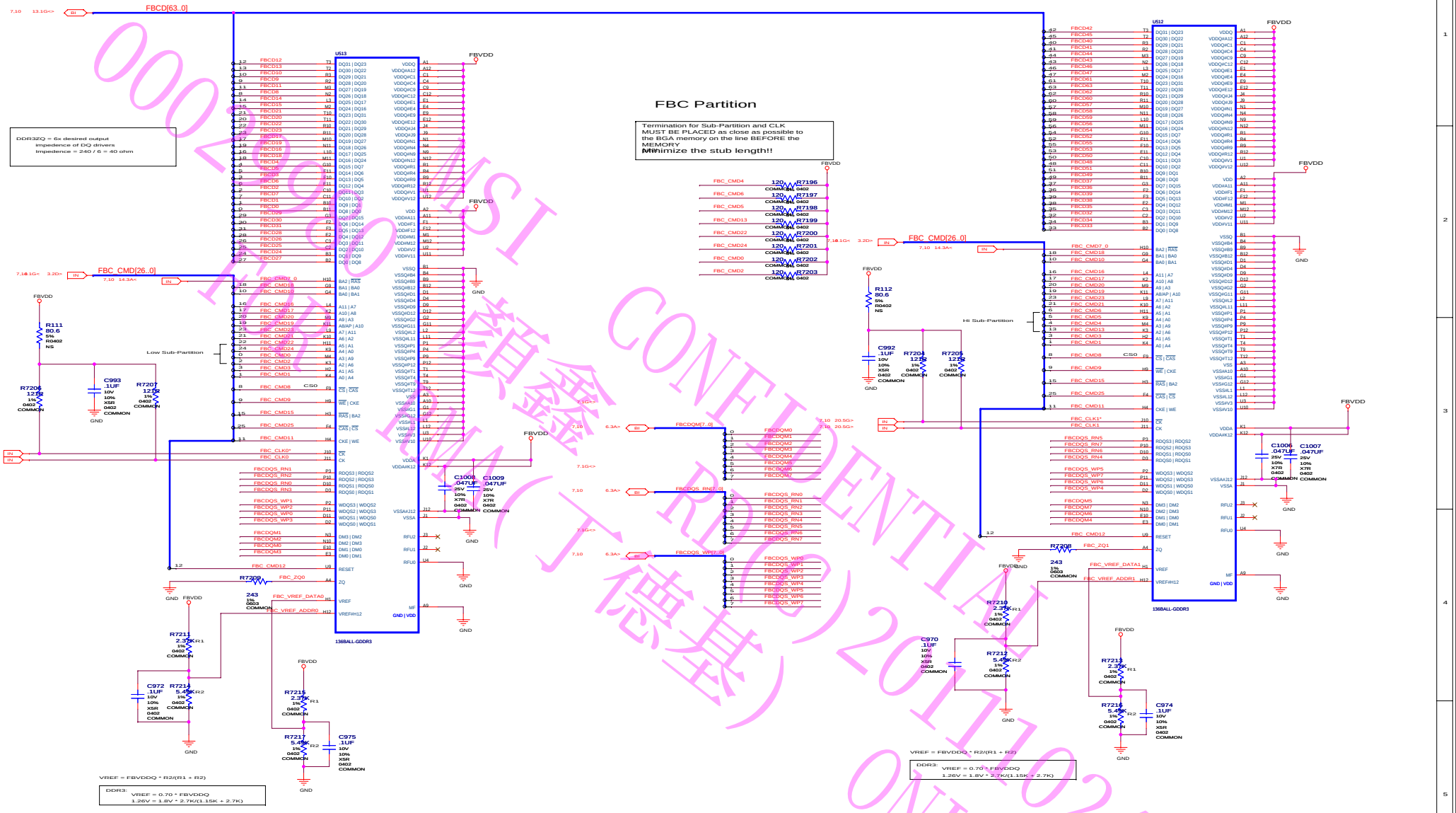

Micro-Star International Co., LTD.		
FB C1		
Size: Custom	Document Number: MS-V089	Rev: 120
Date: Tuesday, April 03, 2007	Sheet 8 of 23	

00029000 MSI CONFIDENTIAL
FOR MSI ONLY

FRAMEBUFFER: PARTITION C DECOUPLING

Decoupling for FBC 0..31

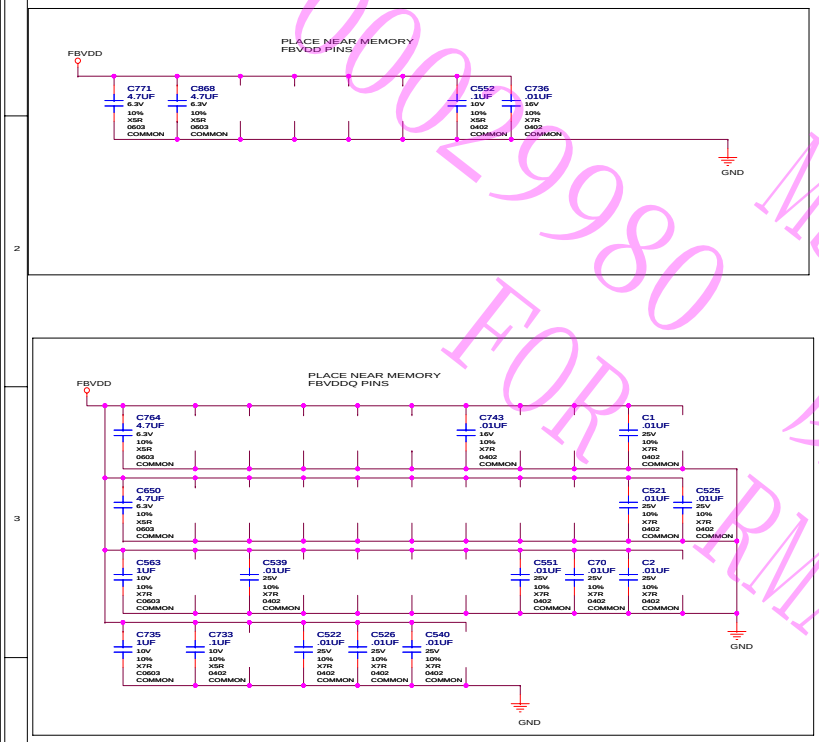

Decoupling for FBC 32..63

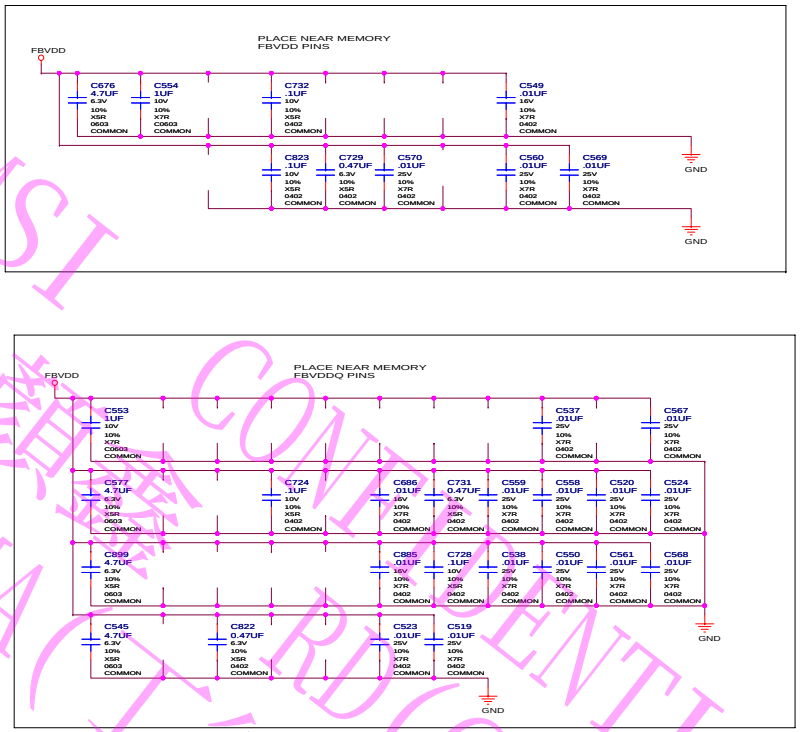

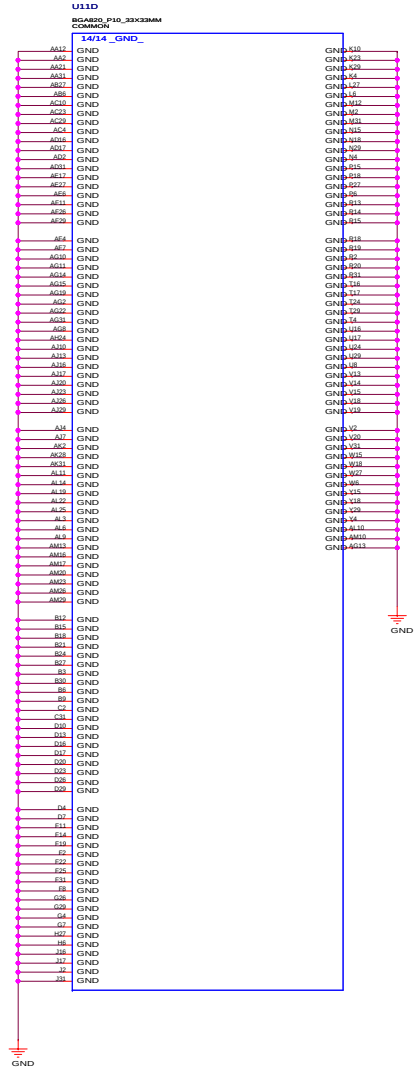

00029980 MSI CONFIDENTIAL
FOR RMA(丁德基) RD(C)20111024002
ONLY

Micro-Star International Co., LTD.		
FBC DECOUPLING		
Size: Custom	Document Number: MS-V089	Rev: 100
Date: Tuesday, April 03, 2007	Sheet 9 of 23	

FRAMEBUFFER: PARTITION
C 8Mx32 BGA136 DDR3

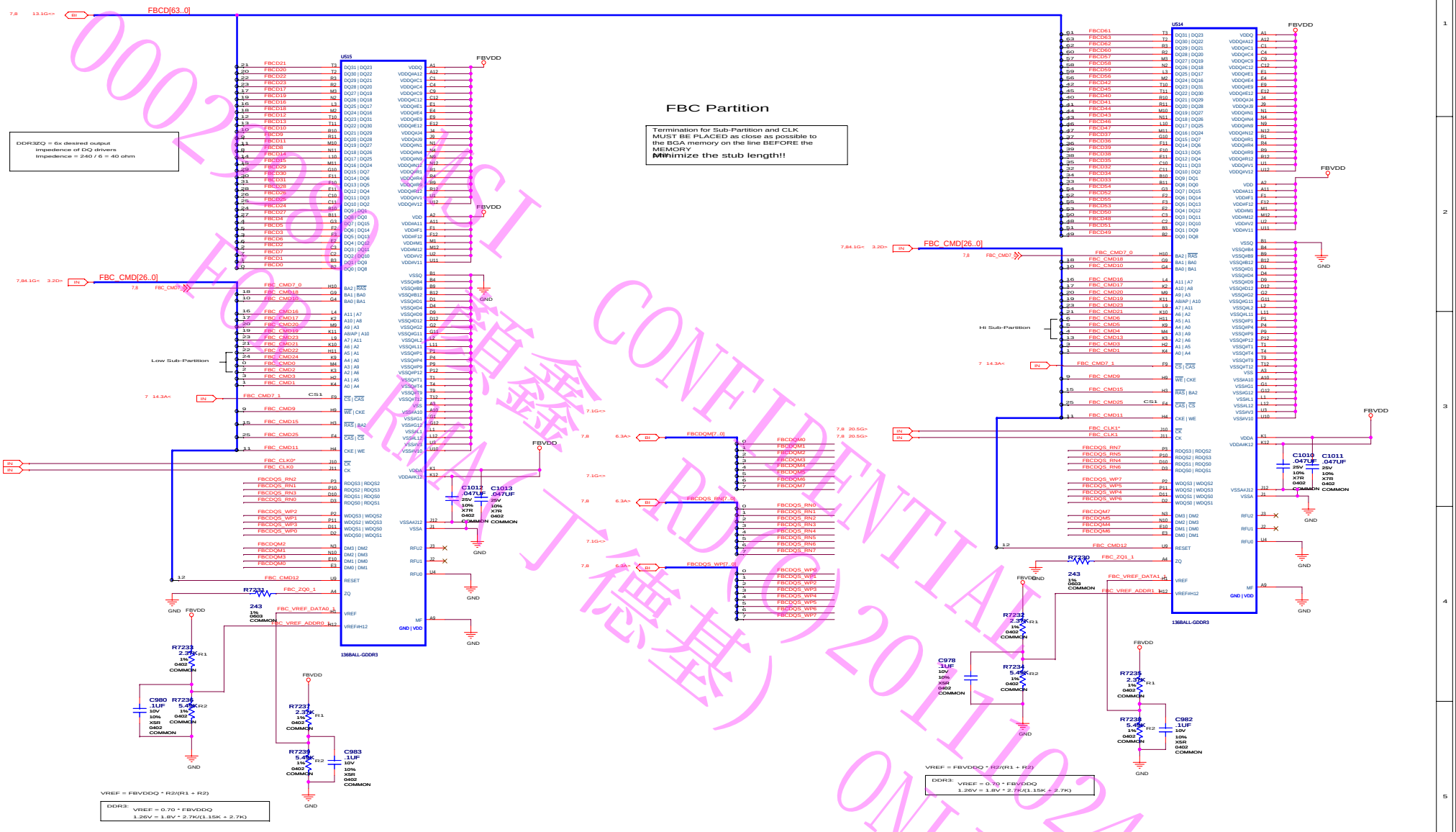

0002608 MSI CONFIDENTIAL
FOR RELEASE ONLY

Micro-Star International Co., LTD.	
FB C2	
Size: Custom	Document Number: MS-V089
Rev: 110	
Date: Tuesday, April 03, 2007	Sheet 10 of 23

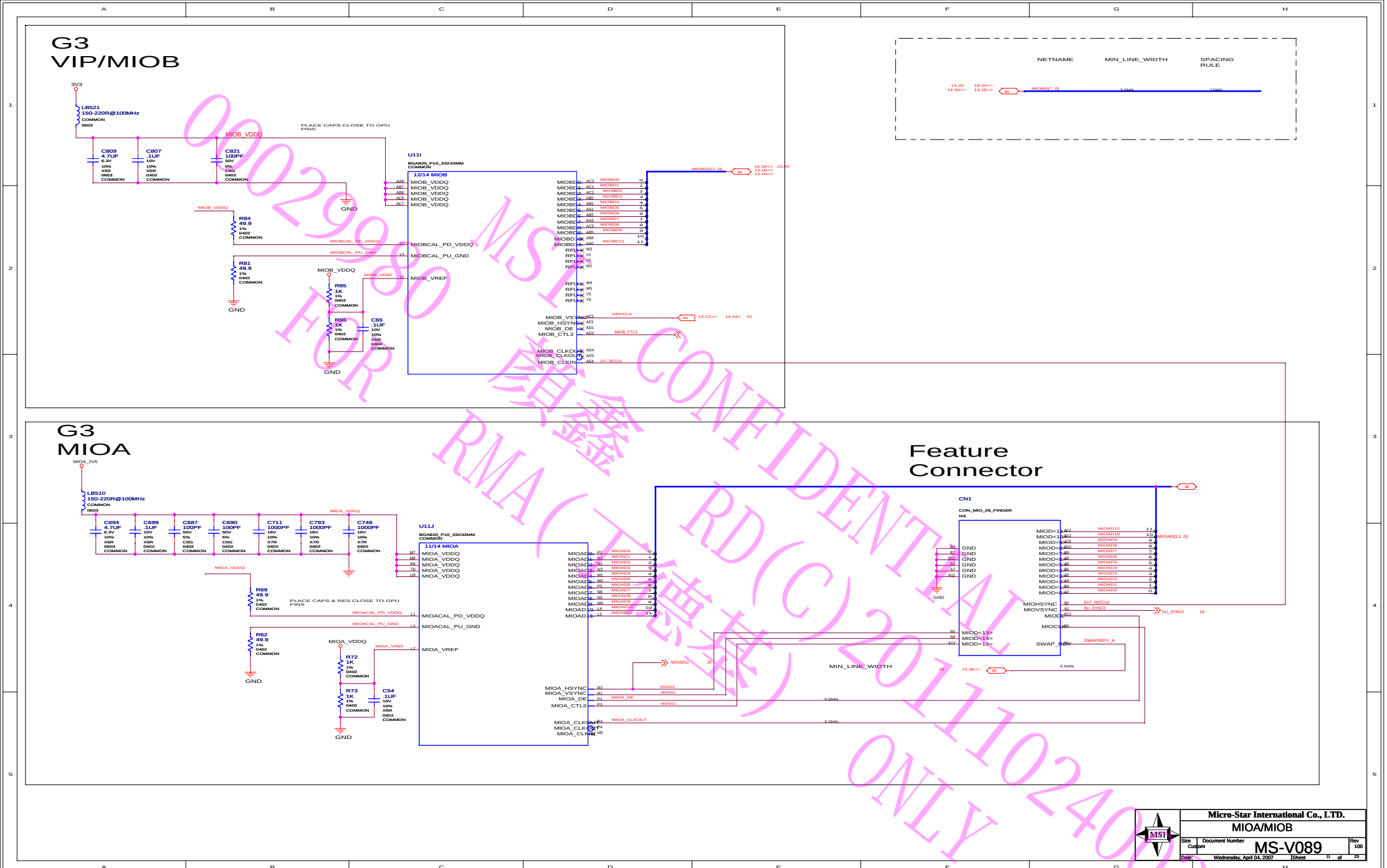

00029980
MSI CONFIDENTIAL
FOR RMA(C)(惠華) ONLY
RD(C)20111024002

Secondary Display (DACC), HDMI

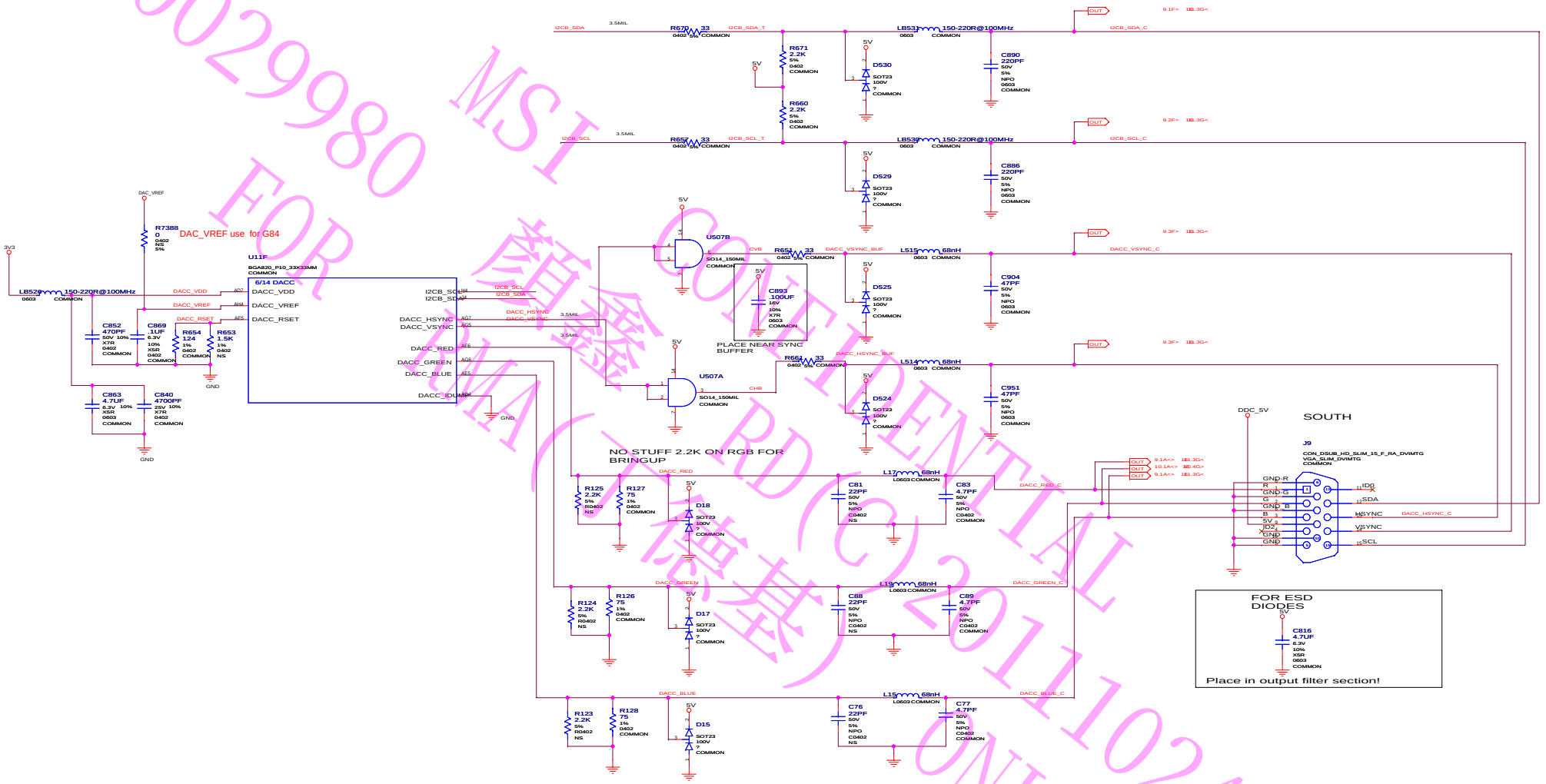

Micro-Star International Co., LTD.		
DACC		
Size: Custom	Document Number: MS-V089	Rev: 120
Date: Tuesday, April 10, 2007	Sheet 12 of 23	

00029980 FOR MSI 鼎鑫 MA(鼎基) CONFIDENTIAL RD(C)20111024002 ONLY

Primary Display (DACA), Slim DB15

DACA
RGB-FILTER

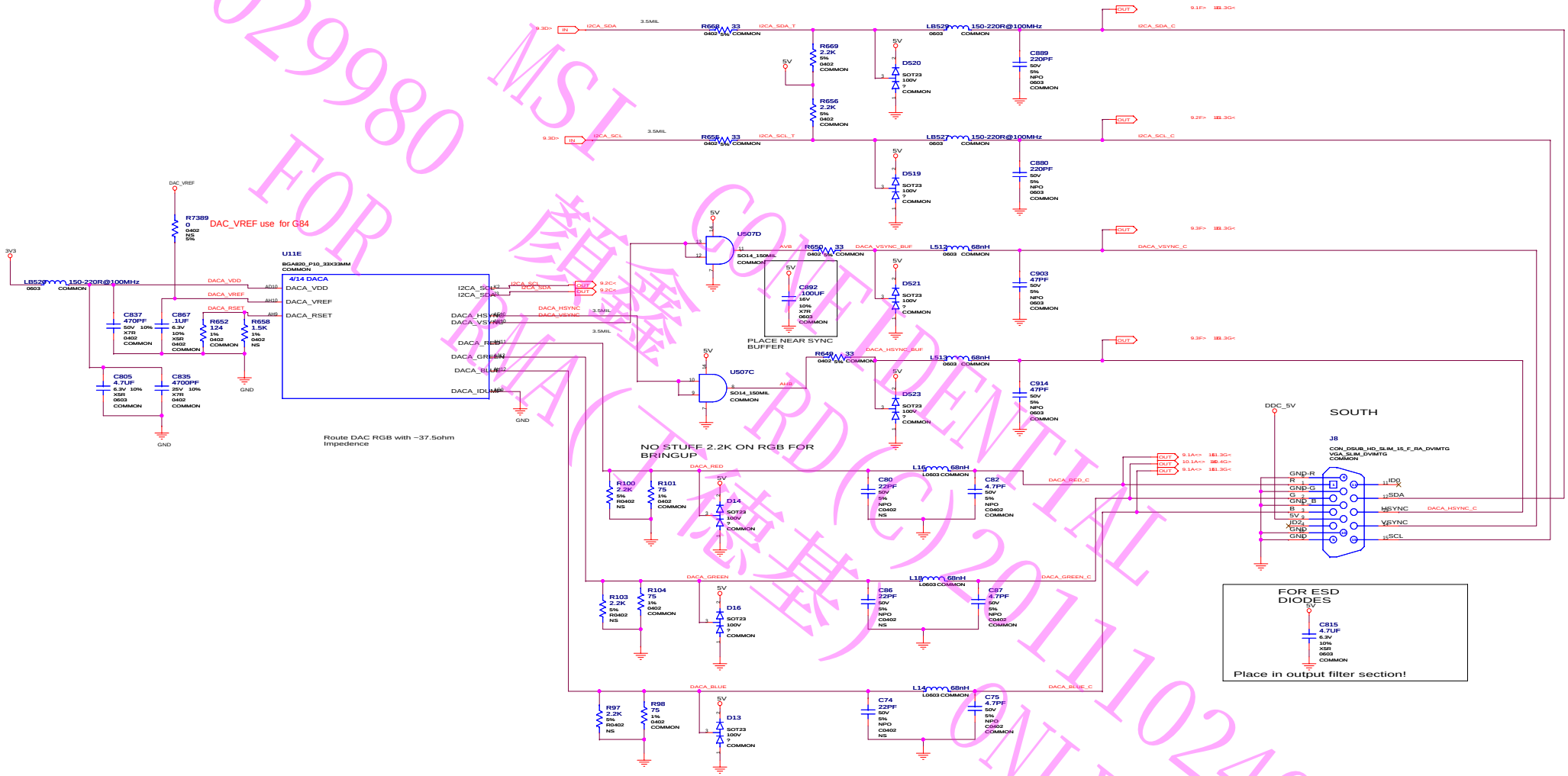

Micro-Star International Co., LTD.	
DACA	
Size: Custom	Document Number: MS-V089
Rev: 100	
Date: Tuesday, April 03, 2007	Sheet 13 of 23

00029980 FOR MSI 微星 CONFIDENTIAL RD(C)20111024002 ONLY

DACB .. MiniDIN VIDEO IN/OUT CONNECTOR /STEREO GLASSES

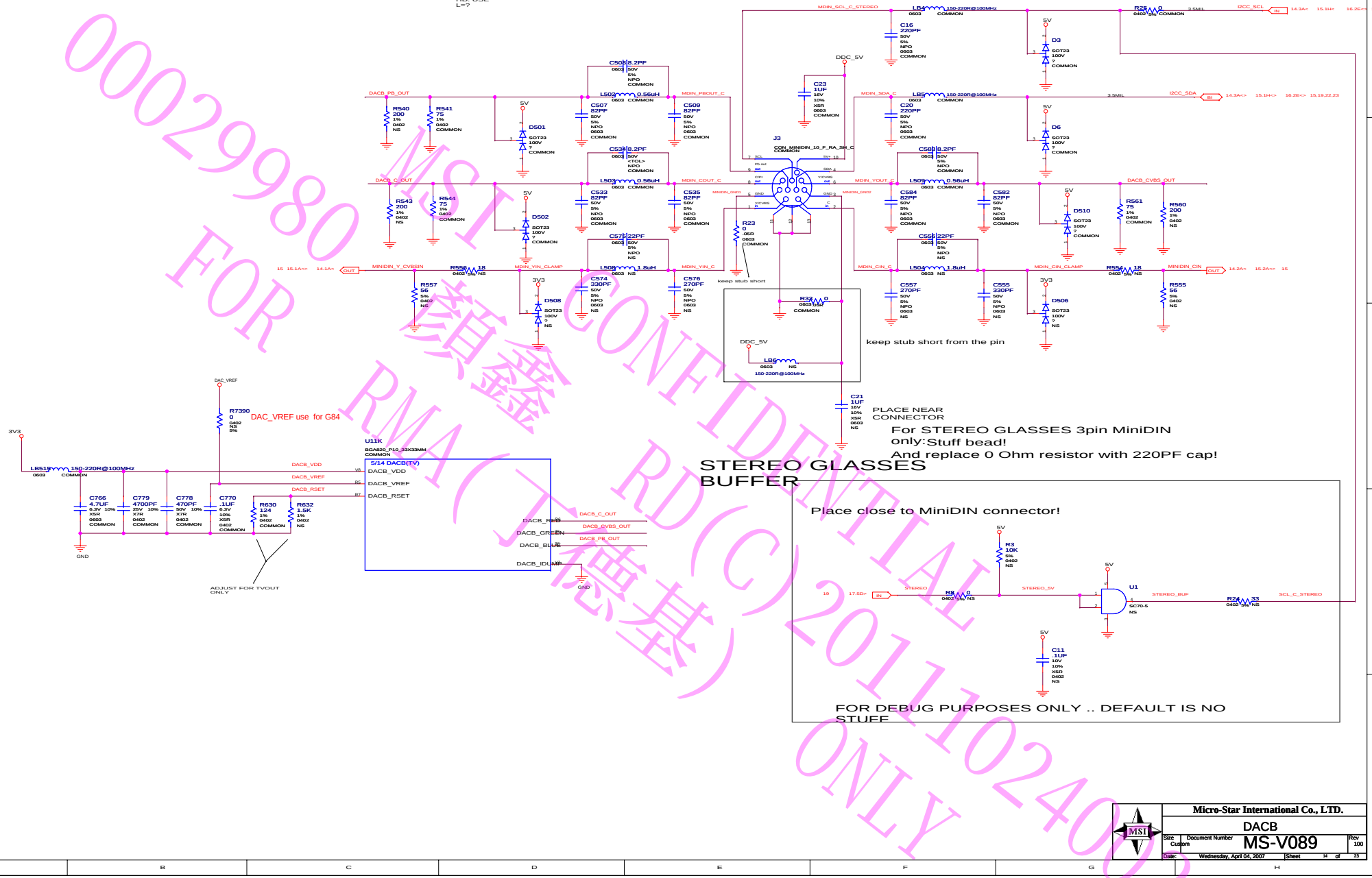

00029980 MSI CONFIDENTIAL
FOR RMA(丁德基) RD(C)20111024002 ONLY

Micro-Star International Co., LTD.		
DACB		
Size: Custom	Document Number: MS-V089	Rev: 100
Date: Wednesday, April 04, 2007	Sheet 14 of 23	

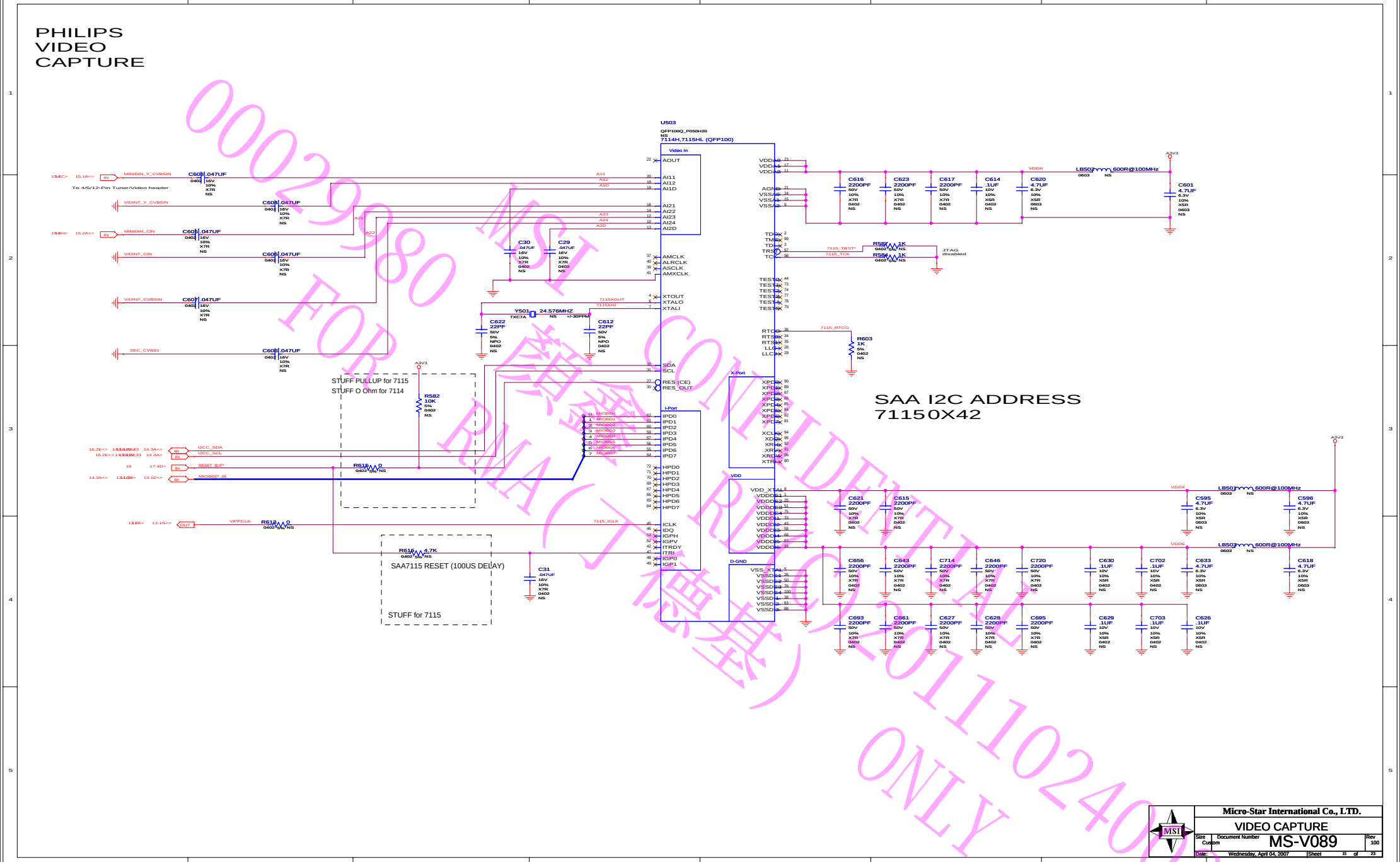
PHILIPS
VIDEO
CAPTURE
U503
QFP100Q_P050H20
NS
7114H,7115HL (QFP100)
Video In
AOUT
AI11
AI12
AI1D
AI21
AI22
AI23
AI24
AI2D
AMCLK
ALRCLK
ASCLK
AMXCLK
XTOUT
XTALO
XTALI
SDA
SCL
RES (CE)
RES_OUT
I-Port
IPD0
IPD1
IPD2
IPD3
IPD4
IPD5
IPD6
IPD7
HPD0
HPD1
HPD2
HPD3
HPD4
HPD5
HPD6
HPD7
ICLK
IDQ
IGPH
IGPV
ITRDY
ITRI
IGP0
IGP1
VDDA
AGND
VSSA
TDO
TMS
TDI
TRST
TCK
TEST
RTCO
RTSX
LLC
X-Port
XPD
XCLK
XD
XR
XRD
XTR
VDD
VDD_XTAL
VDDD
VDDE
VDDX
D-GND
VSS_XTAL
VSSD
MINIDIN_Y_CVBSIN
VIDINT_Y_CVBSIN
MINIDIN_CIN
VIDINT_CIN
VIDINT_CVBSIN
SEC_CVBS1
To 4/5/12-Pin Tuner/Video header
C603 .047UF
C604 .047UF
C605 .047UF
C606 .047UF
C607 .047UF
C608 .047UF
C30 .047UF
C29 .047UF
Y501 24.576MHZ
TXC7A
C622 22PF
C612 22PF
STUFF PULLUP for 7115
STUFF O Ohm for 7114
R582 10K
I2CC_SDA
I2CC_SCL
RESET_BUF*
MIOBD[7..0]
R616 0
VIPPCLK
R618 0
R616 4.7K
SAA7115 RESET (100US DELAY)
STUFF for 7115
C31 .047UF
7115XOUT
7115XIN
7115_ICLK
7115_TRST*
7115_TCK
7115_RTCO
R587 1K
R584 1K
JTAG disabled
R603 1K
C616 2200PF
C623 2200PF
C617 2200PF
C614 .1UF
C620 4.7UF
LB502 600R@100MHz
C601 4.7UF
C621 2200PF
C615 2200PF
C595 4.7UF
C596 4.7UF
C656 2200PF
C643 2200PF
C714 2200PF
C646 2200PF
C720 2200PF
C630 .1UF
C702 .1UF
C633 4.7UF
C618 4.7UF
C693 2200PF
C661 2200PF
C627 2200PF
C628 2200PF
C695 2200PF
C629 .1UF
C703 .1UF
C626 .1UF
SAA I2C ADDRESS
71150X42
A3V3
VDDA
VDDX
VDDE
MSI
CONFIDENTIAL
RDC(2011102402)
ONLY
Micro-Star International Co., LTD.
VIDEO CAPTURE
Size Custom
Document Number MS-V089
Rev 100
Date: Wednesday, April 04, 2007
Sheet 15 of 23

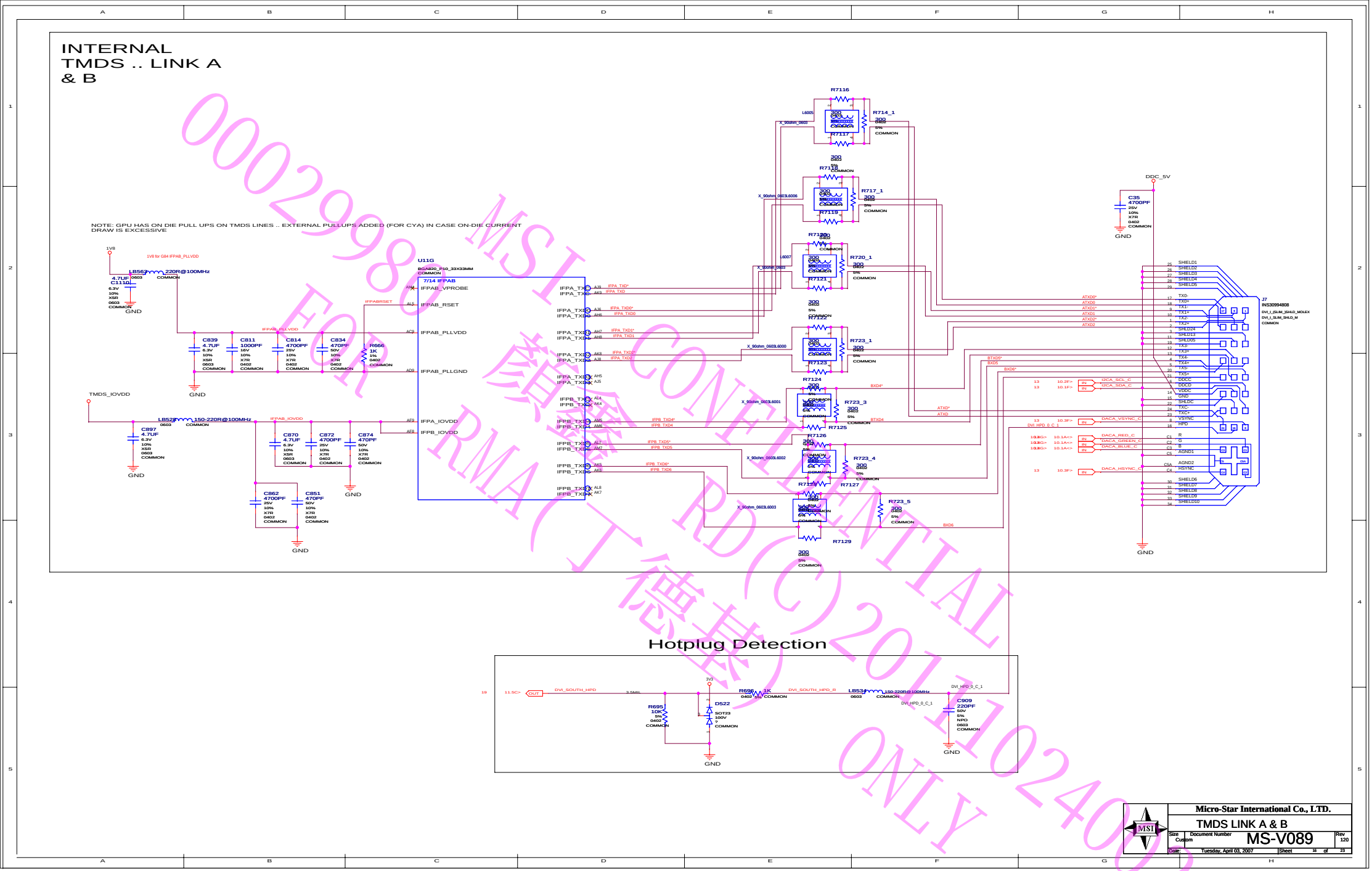

00029980 MSI CONFIDENTIAL
FOR RMA(丁德恭) RD(C)2011102402
ONLY

INTERNAL TMDS
.. LINK C & D

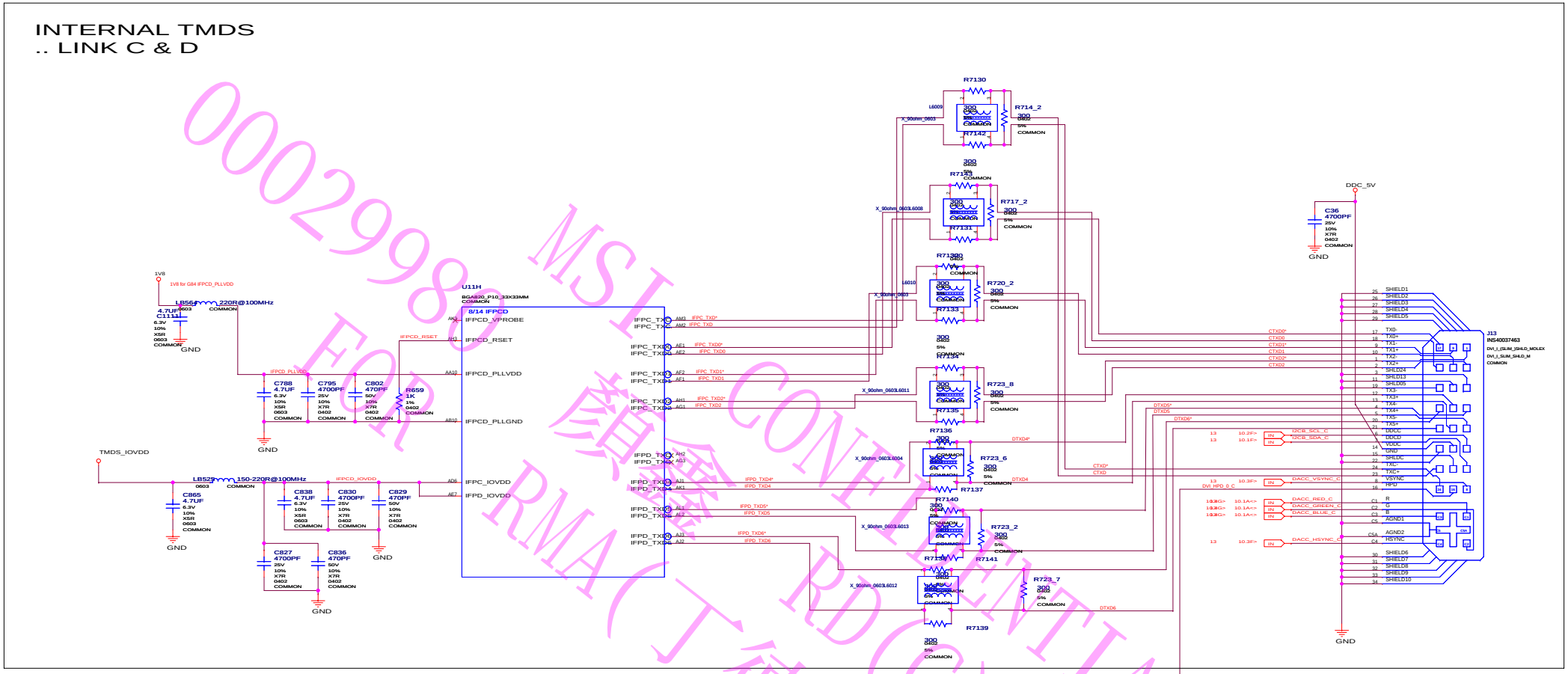

Hotplug Detection

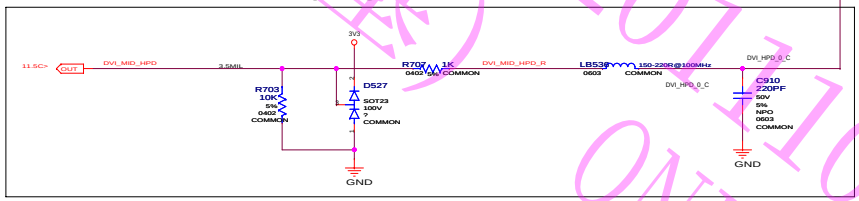

00029980 MSI CONFIDENTIAL
FOR RMA(丁德泰) RD(C)20111024002 ONLY

Micro-Star International Co., LTD.			
TMDS LINK C & D			
Size: Custom	Document Number: MS-V089		Rev: 120
Date: Tuesday, April 10, 2007	Sheet 17 of 23		

SPDIF IN

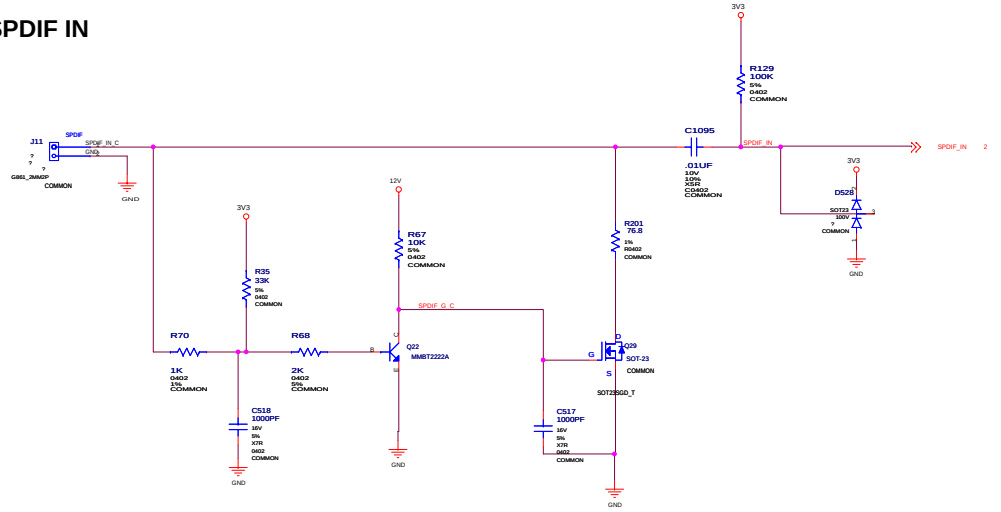

XTAL/PLLVDD

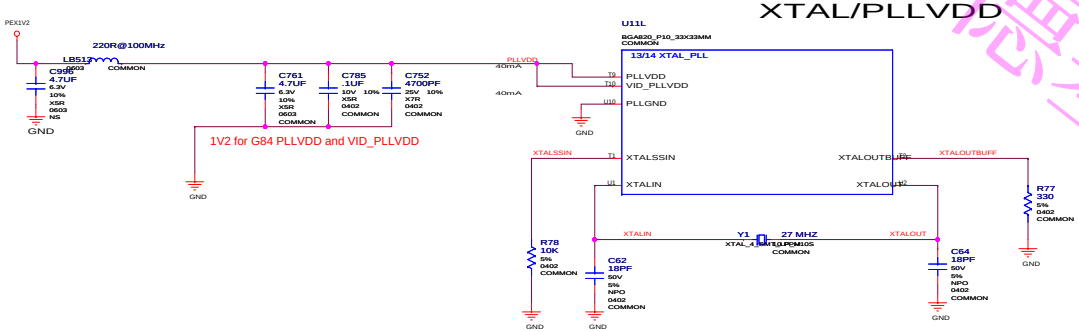

00029980 MSI 顏鑫 CONFIDENTIAL
FOR RMA(丁德基) RD(C)20111024002 ONLY

Micro-Star International Co., LTD.			
XTAL/SPDIF IN			
Size: Custom	Document Number: MS-V089		Rev: 110
Date: Tuesday, April 10, 2007	Sheet 18 of 23		

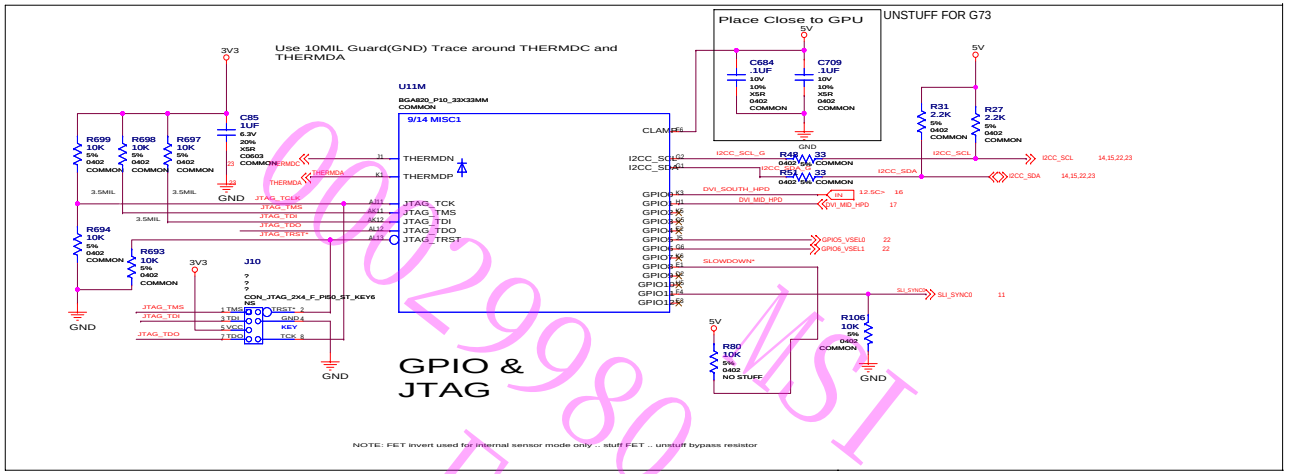

GPIO Assignment Table

GPIO	I/O	FUNCTION
0	IN	DVI MID HOTPLUG DET
1	IN	HDMI hotplug
2	IN	RESERVED
3	IN	RESERVED
4	IN	TUNER IRQ
5	OUT	NVVDD VOLTAGE SELECT 0
6	OUT	NVVDD VOLTAGE SELECT 1
7	Out	TPI INTERRUPT ENABLE
8	IN	RESERVED
9	OUT	PWM FAN
10	IN	INT from Sii1930
11	IN	TVRSET
12	IN	uC PROGRAMMING CONTROL

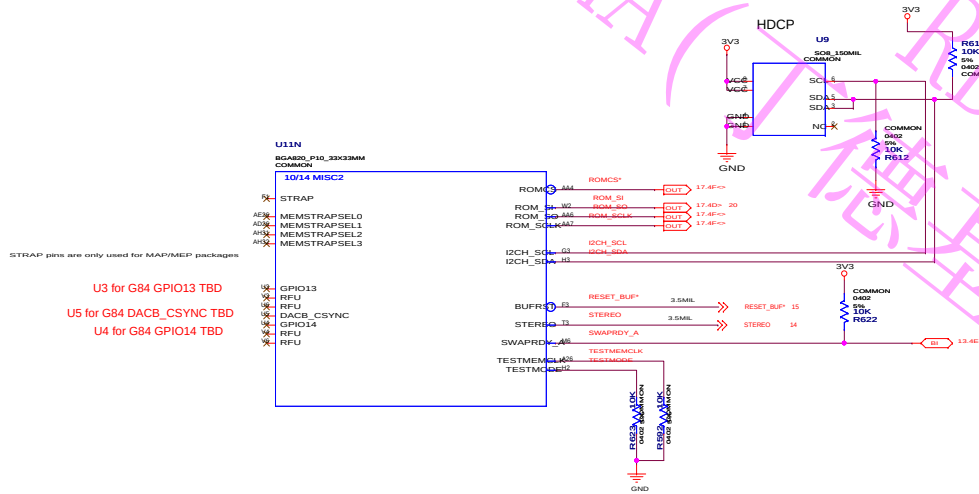

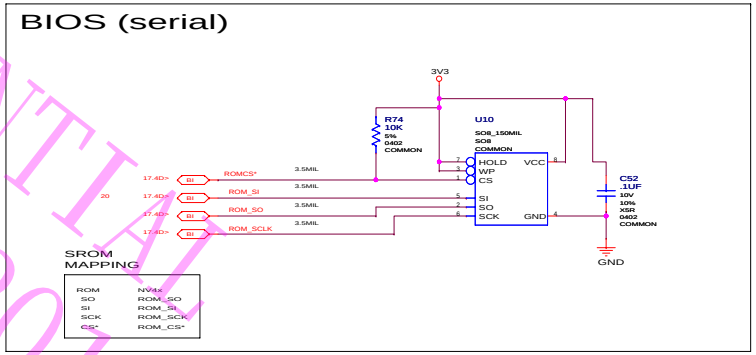

Micro-Star International Co., LTD.

GPIO/ROM/HDCP ROM

Size: Custom | Document Number: MS-V089 | Rev: 100

Date: Tuesday, April 03, 2007 | Sheet 19 of 23

00029980 MSI CONFIDENTIAL
FOR RMA(工程基) RD(C)20111024002 ONLY

BIOS, Straps, Misc

Straps

Assembly:
BIOS

Mechanical parts

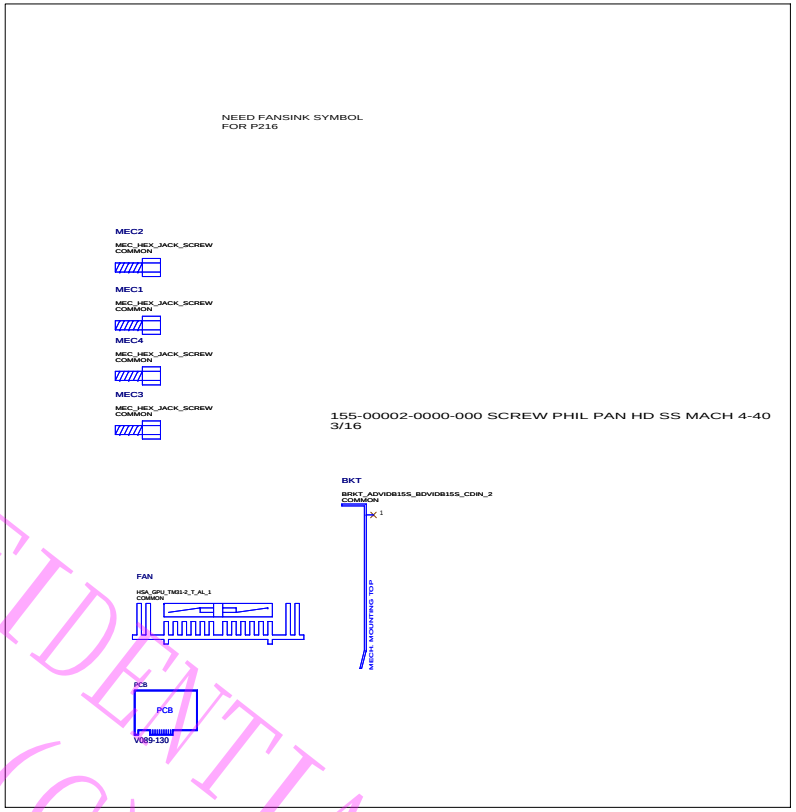

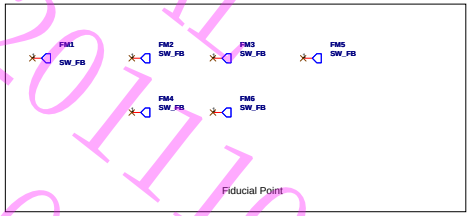

Micro-Star International Co., LTD.			
Straps/Mechanical			
Size: Custom	Document Number: MS-V089		Rev: 100
Date: Tuesday, April 10, 2007		Sheet 20 of 23	

00029980 MSI CONFIDENTIAL
FOR 資鑫 RD(C)20111024002
RMA(丁德基) ONLY

Power Supply TMDS/A3V3

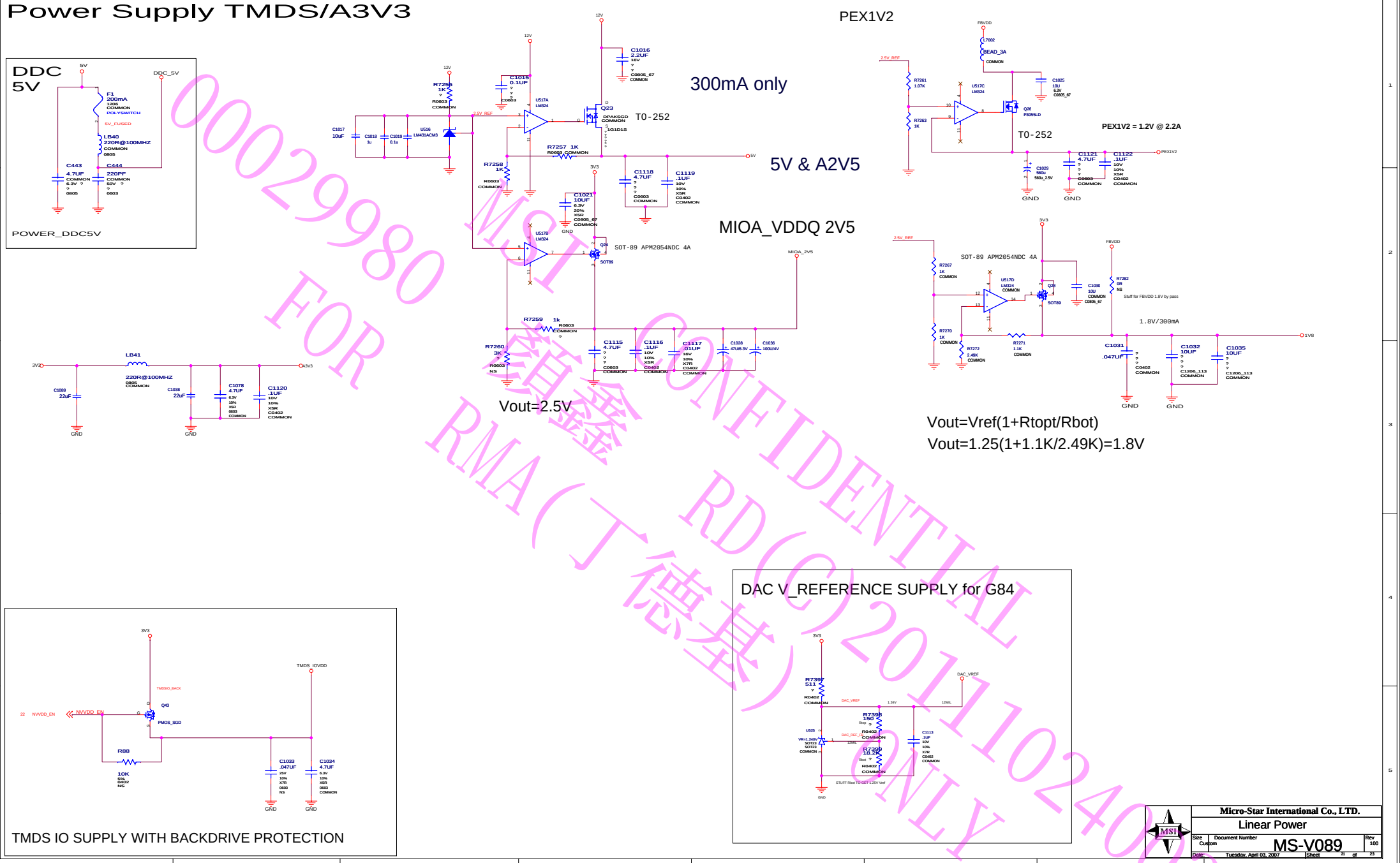

00029980 MSI CONFIDENTIAL
FOR 智鑫 RD(C)20111024002
RMA(丁德基) ONLY

Micro-Star International Co., LTD.		
Linear Power		
Size: Custom	Document Number: MS-V089	Rev: 100
Date: Tuesday, April 03, 2007	Sheet 21 of 23	

NVVDD with RT-8805 Two Phase PWM

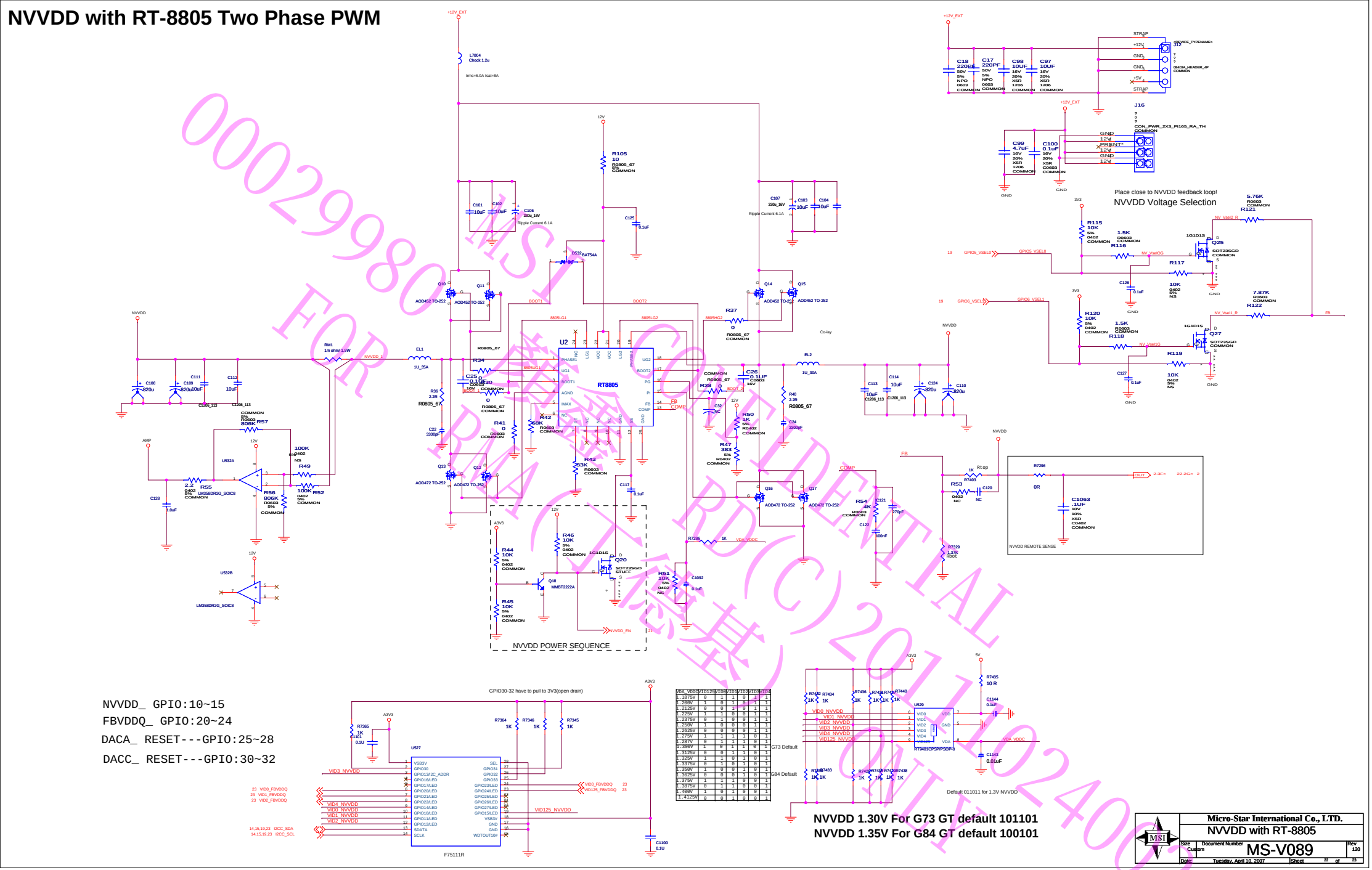

00029980 MSI CONFIDENTIAL FOR RMA (TEST) RD(C) 2011/024002 ONLY

FBVDD with MS-11

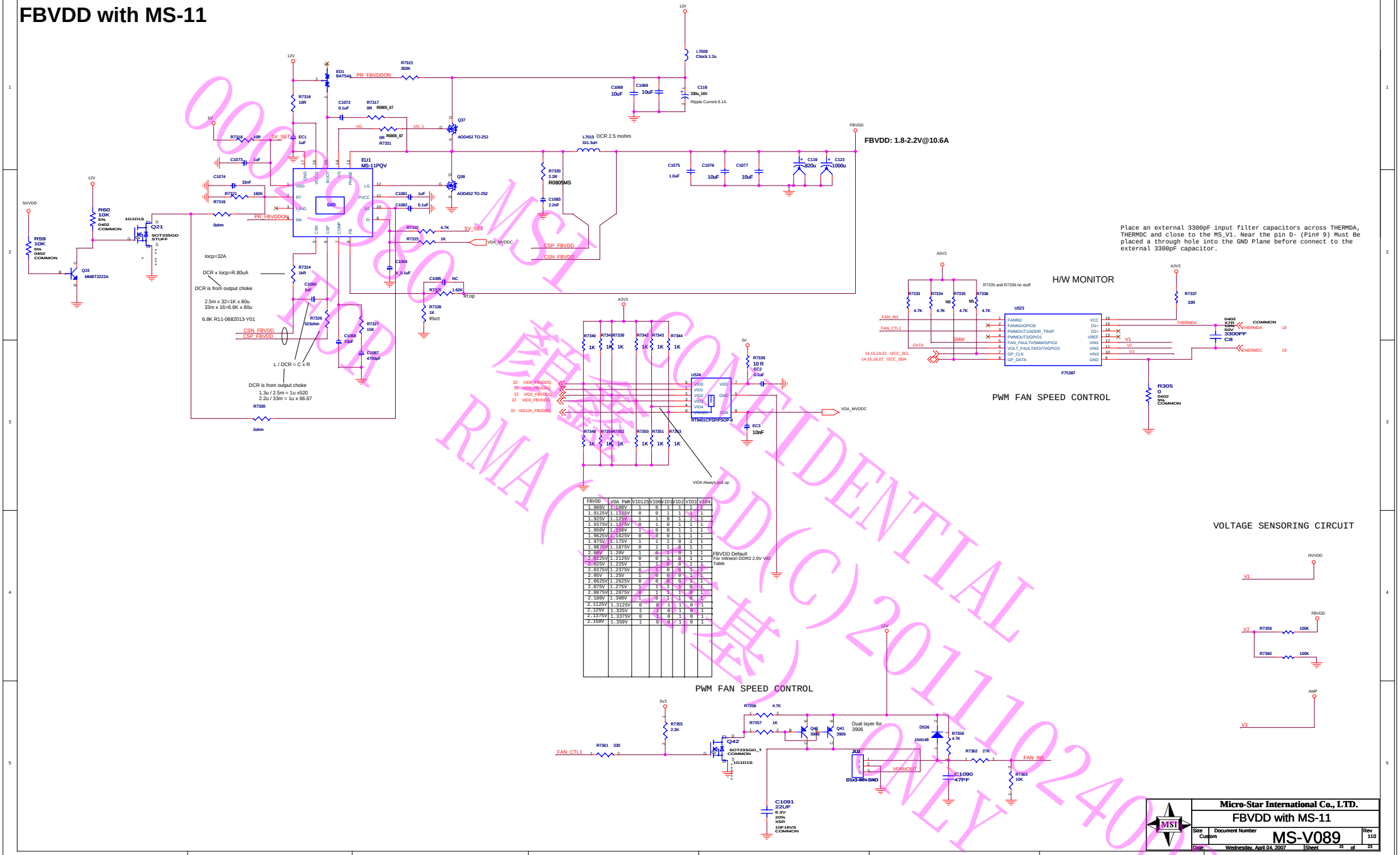

FBVDD	VDA PWR	VID125	VID0	VID1	VID2	VID3	VID4
1.900V	1.100V	1	0	1	1	1	1
1.9125V	1.1125V	0	0	1	1	1	1
1.925V	1.125V	1	1	0	1	1	1
1.9375V	1.1375V	0	1	0	1	1	1
1.950V	1.150V	1	0	0	1	1	1
1.9625V	1.1625V	0	0	0	1	1	1
1.975V	1.175V	1	1	1	0	1	1
1.9875V	1.1875V	0	1	1	0	1	1
2.00V	1.20V	1	0	1	0	1	1
2.0125V	1.2125V	0	0	1	0	1	1
2.025V	1.225V	1	1	0	0	1	1
2.0375V	1.2375V	0	1	0	0	1	1
2.05V	1.25V	1	0	0	0	1	1
2.0625V	1.2625V	0	0	0	0	1	1
2.075V	1.275V	1	1	1	1	0	1
2.0875V	1.2875V	0	1	1	1	0	1
2.100V	1.300V	1	0	1	1	0	1
2.1125V	1.3125V	0	0	1	1	0	1
2.125V	1.325V	1	1	0	1	0	1
2.1375V	1.3375V	0	1	0	1	0	1
2.150V	1.350V	1	0	0	1	0	1

FBVDD Default
For Infineon DDR3 2.0V VID Table

0009980 MSI CONFIDENTIAL
RMA (C) 2011102402

Micro-Star International Co., LTD.		
FBVDD with MS-11		
Size: Custom	Document Number: MS-V089	Rev: 110
Date: Wednesday, April 04, 2007	Sheet 23 of 23	