8885 (C69), 4/8Mx16 DDR, 32/64MB, LFH and RGB-TV-out, PCI

PCI DEVICE ID = 0X172 FOR GF4-MX420-XX.

MS-8878 BASE ON P73-A04 MODIFY

Page 1. Add CE1 and RE1 for EMI solution.
Add compability with M/B.
rename , C22 to C144,R4 to R111,R5 to R112,R6 to R113,U1 to U101
change NET name, U100.AH17 to BUF_PCIRST_ also at the R112 and C144.
Page 4. U300.9,U300.10,U300.1,U300.2 and U300.7 pin connect to GND.
Page 5. remove VGA2 function.
Page 9. Remove SAA7114H function and ADD AV-OUT & S_OUT conector.
remove L500,C500,C505,C506,C538,C539,C507,C508
Page 10. C613,C604,C605,C614,L600 and L601 change to DIP type,ADD C620 , Q1 change to AOS4800
Page 11. R704~R719,R726~R733,R745,R746 PAD size change to 0603 type and Add R747 10k ohm.
Add parallel bios function.
R746,R747 stuff (00)
Page 6 . Add Fan power function.

MS-8878 VER:310 MODIFY

Page 2. Add 74XCT74 buffer for PCI_RST function.
Page 5. Add 75ohm and bypass Cap. for TV-OUT function.
Page 9. Swap S-OUT.3 and S-OUT.4 net name.
Page 10. Change DIP type CAP. footprint.
Page 11. Change U1000.22 net name.

MS-8885 BASE ON MS-8878 VER:310

Page 2. Remove AGP interface.
Page 3. Add PCI interface & level shift IC (Insert page).
Page 7. Add LFH interface.
Page 10. Change AV_OUT & S_OUT connector to S-TV-out(9 pin).
Page 13. Add H/W monitor.
Page 14. Add Linear Power Supplies.

{Item}\t{Quantity}\t{Reference}\t{Value}\t{Assembly}\t{MAIN}\t{NVPN}\t{Source Package}\t{AVL1}\t{AVL2}\t{AVL3}\t{AVL4}\t{AVL5}
Item\tQuantity\tReference\tValue\tAssembly\tMAIN\tNVPN\tSource Package\tAVL1\tAVL2\tAVL3\tAVL4\tAVL5

	Micro-Star International Co., LTD.		
	MS-8885		
Size: C	Document Number: Custom TOP PAGE		Rev: 00A
Date: Friday, June 21, 2002		Sheet 1 of 14	

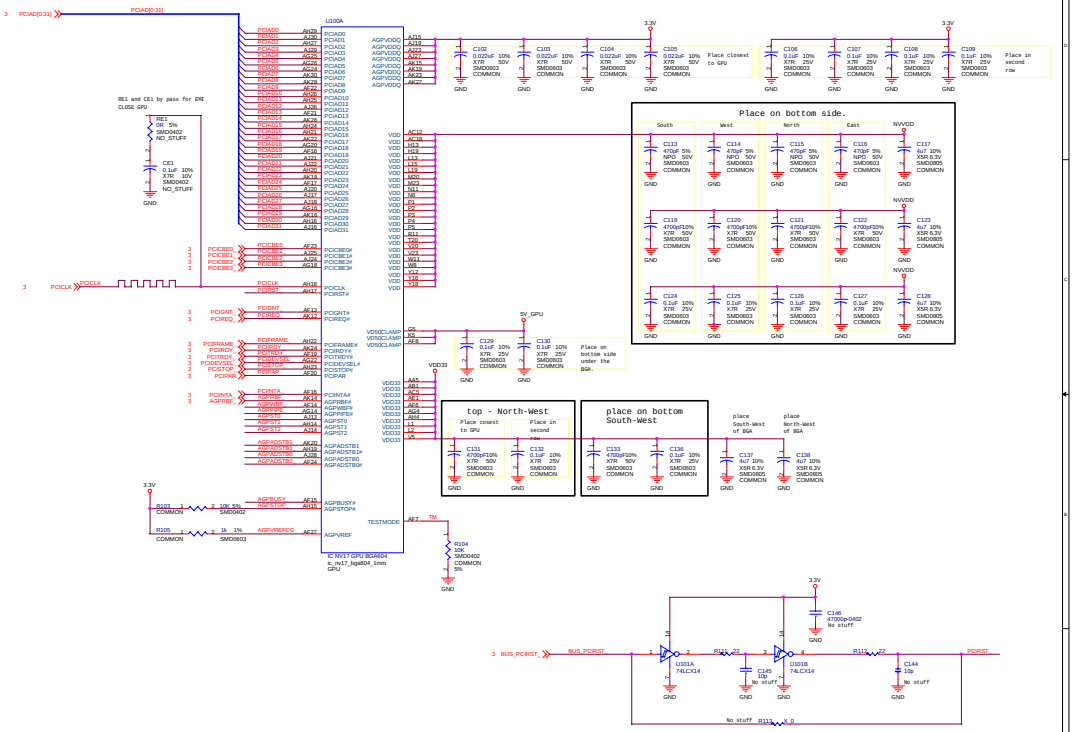

1. AGP interface, core decoupling

Micro-Star International Co., LTD.

MS-8885

Size	Document Number	Rev
Custom	NV17 HOST	00A

Date: Friday, June 21, 2002 Sheet 2 of 14

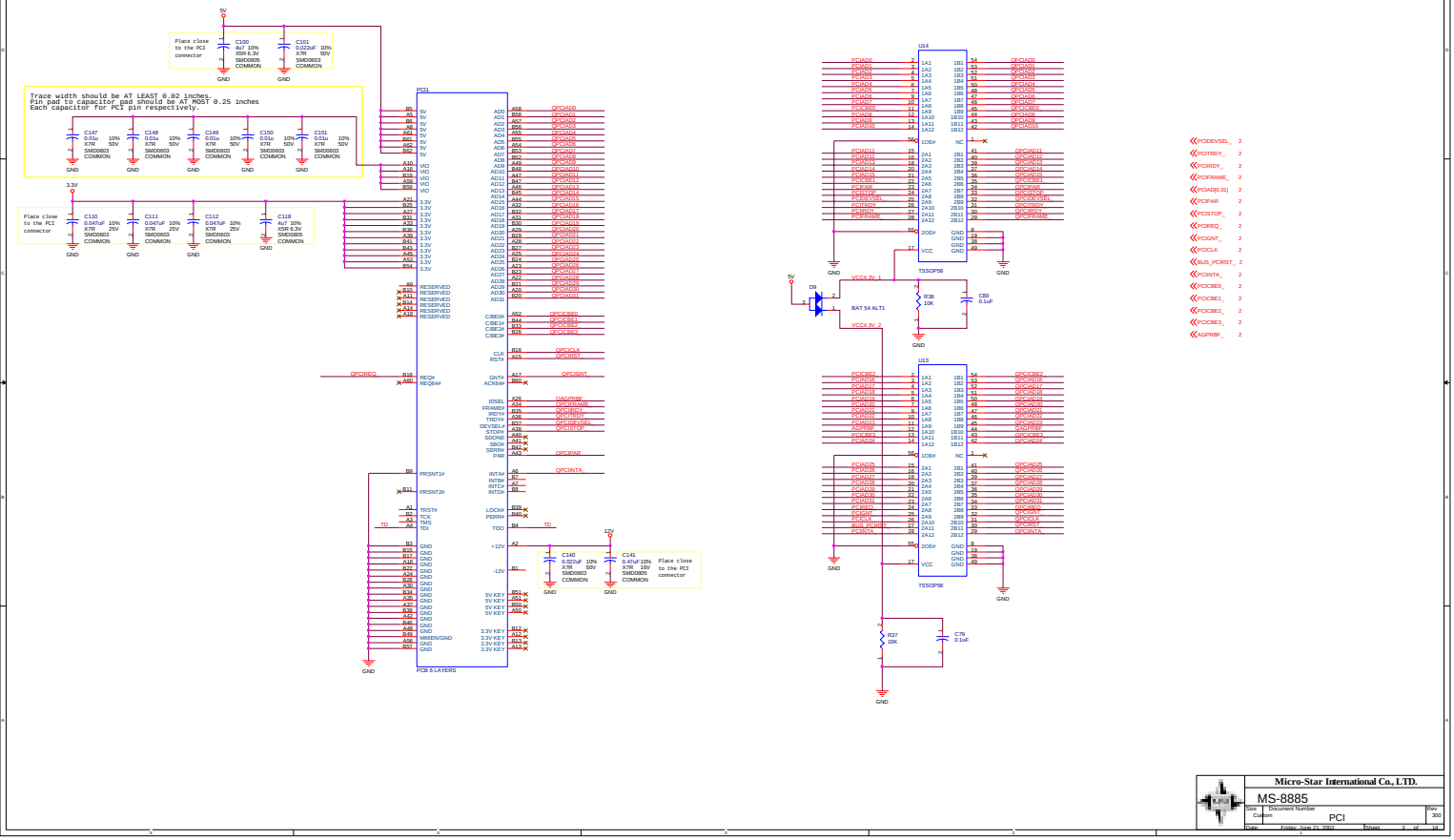

Micro-Star International Co., LTD.	
MS-8885	
Size: Custom	Document Number: PCI
Rev: 300	
Date: Friday, June 21, 2002	Sheet 3 of 14

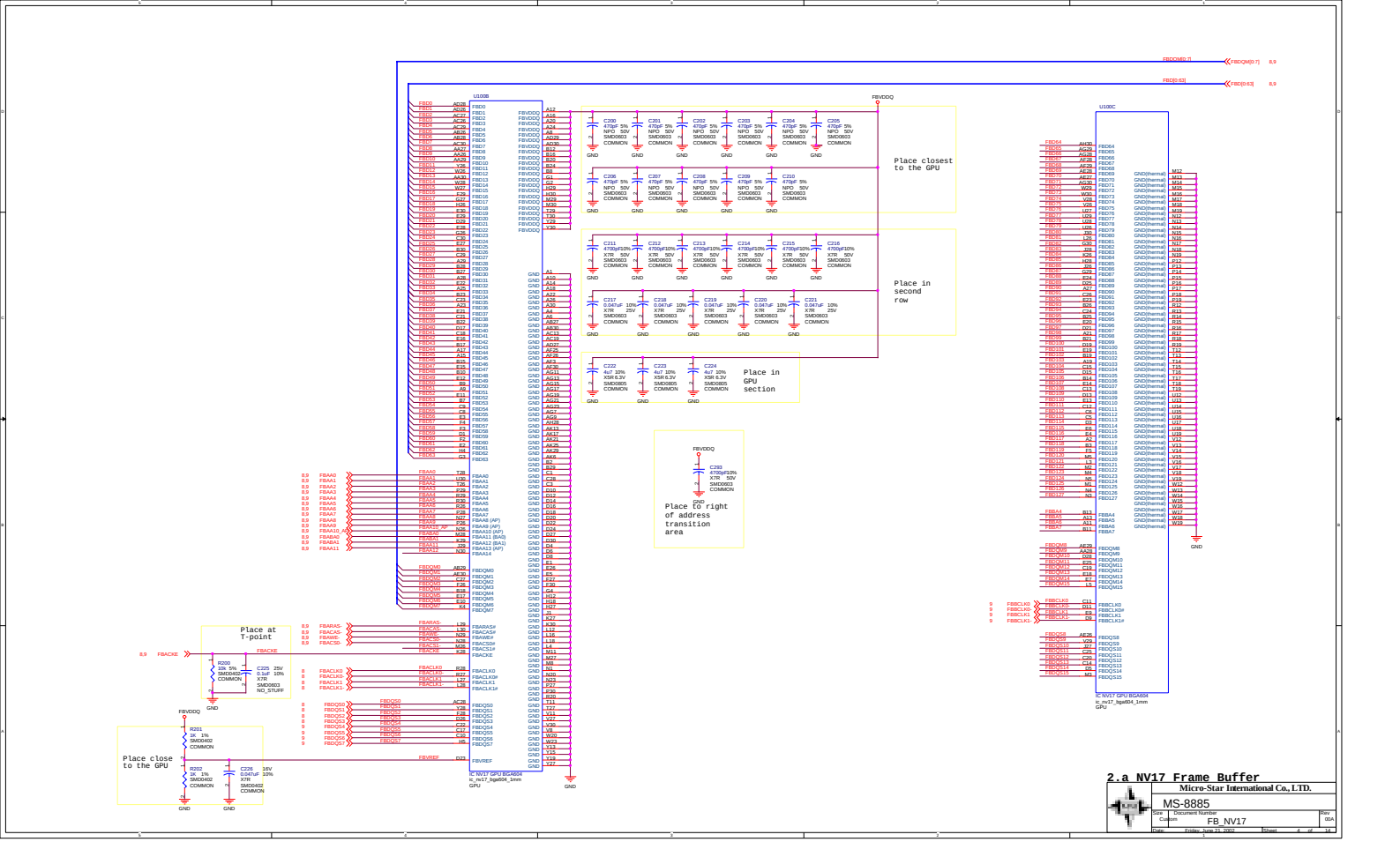
Place closest to the GPU
Place in second row
Place in GPU section
Place in right of address transition area
Place at T-point
Place close to the GPU
U100B
U100C
IC NV17 GPU BGA604
ic_nv17_bga604_1mm
GPU
2.a NV17 Frame Buffer
Micro-Star International Co., LTD.
MS-8885
Size: Custom
Document Number: FB_NV17
Rev: 00A
Date: Friday, June 21, 2002
Sheet: 4 of 14

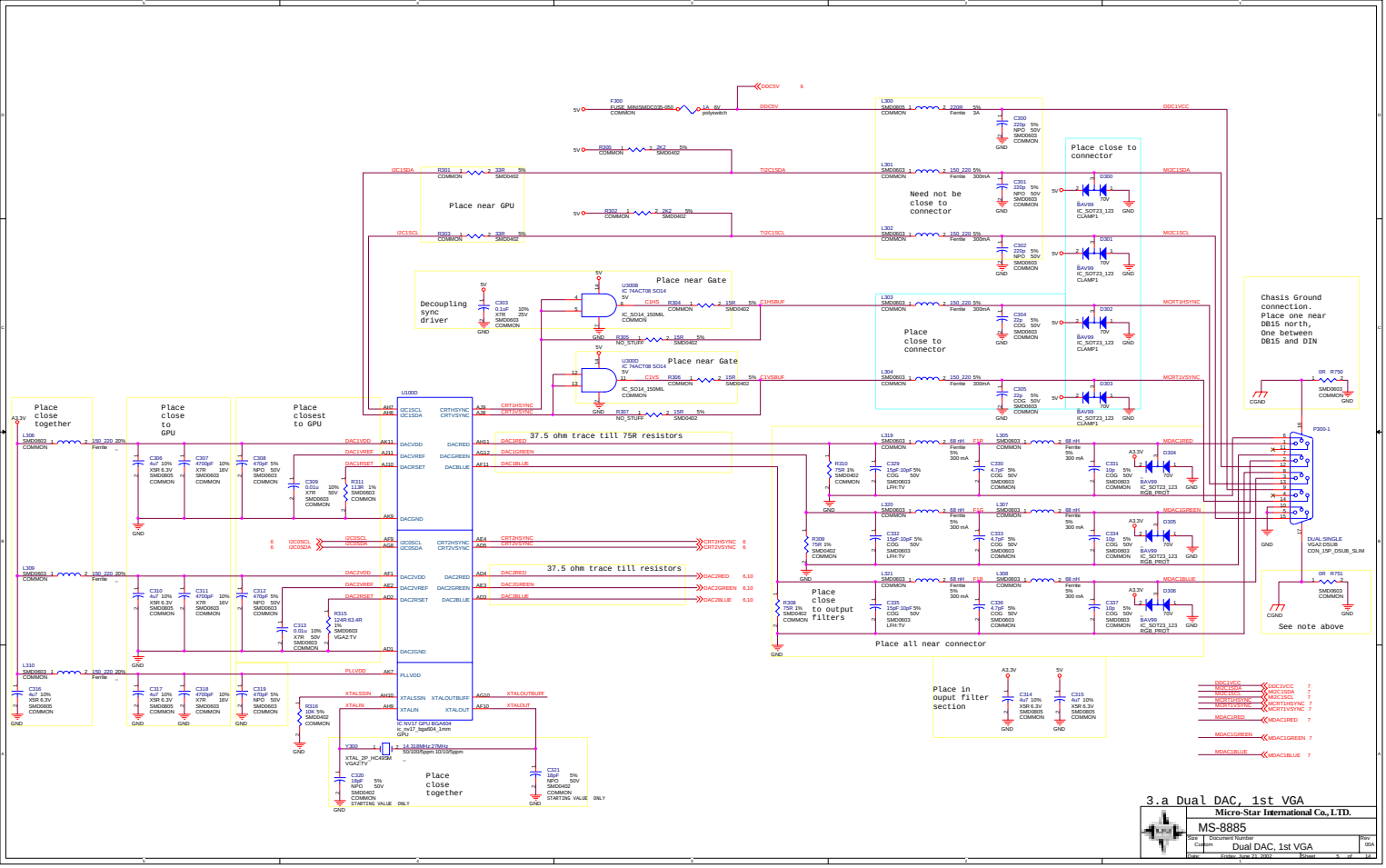

3.a Dual DAC, 1st VGA

Micro-Star International Co., LTD.

MS-8885

Size: Custom | Document Number: Dual DAC, 1st VGA | Rev: 00A

Date: Friday, June 21, 2002 | Sheet 5 of 14

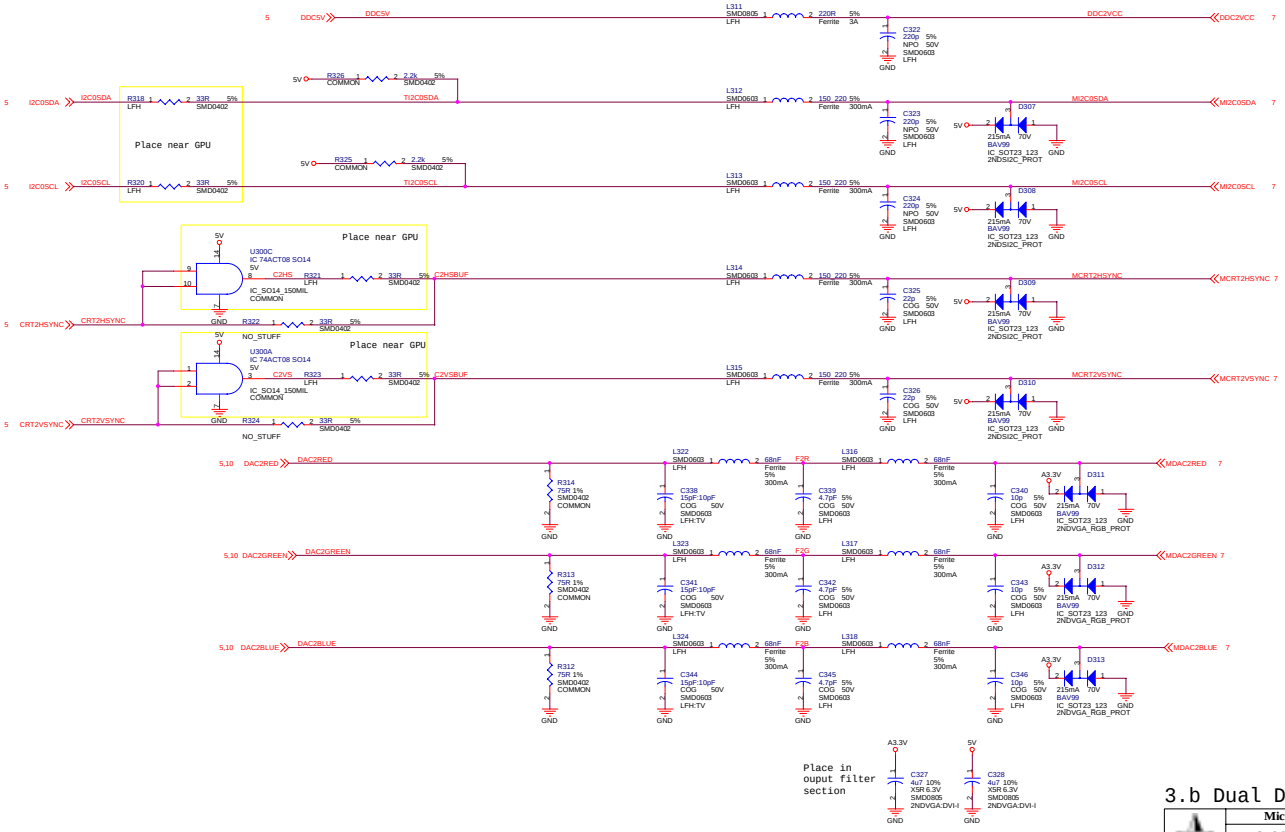

3.b Dual DAC, 2nd VGA

Micro-Star International Co., LTD.	
MS-8885	
Size: C	Document Number: Dual DAC, 2nd VGA
Rev: 00A	
Date: Friday, June 21, 2002	Sheet 6 of 14

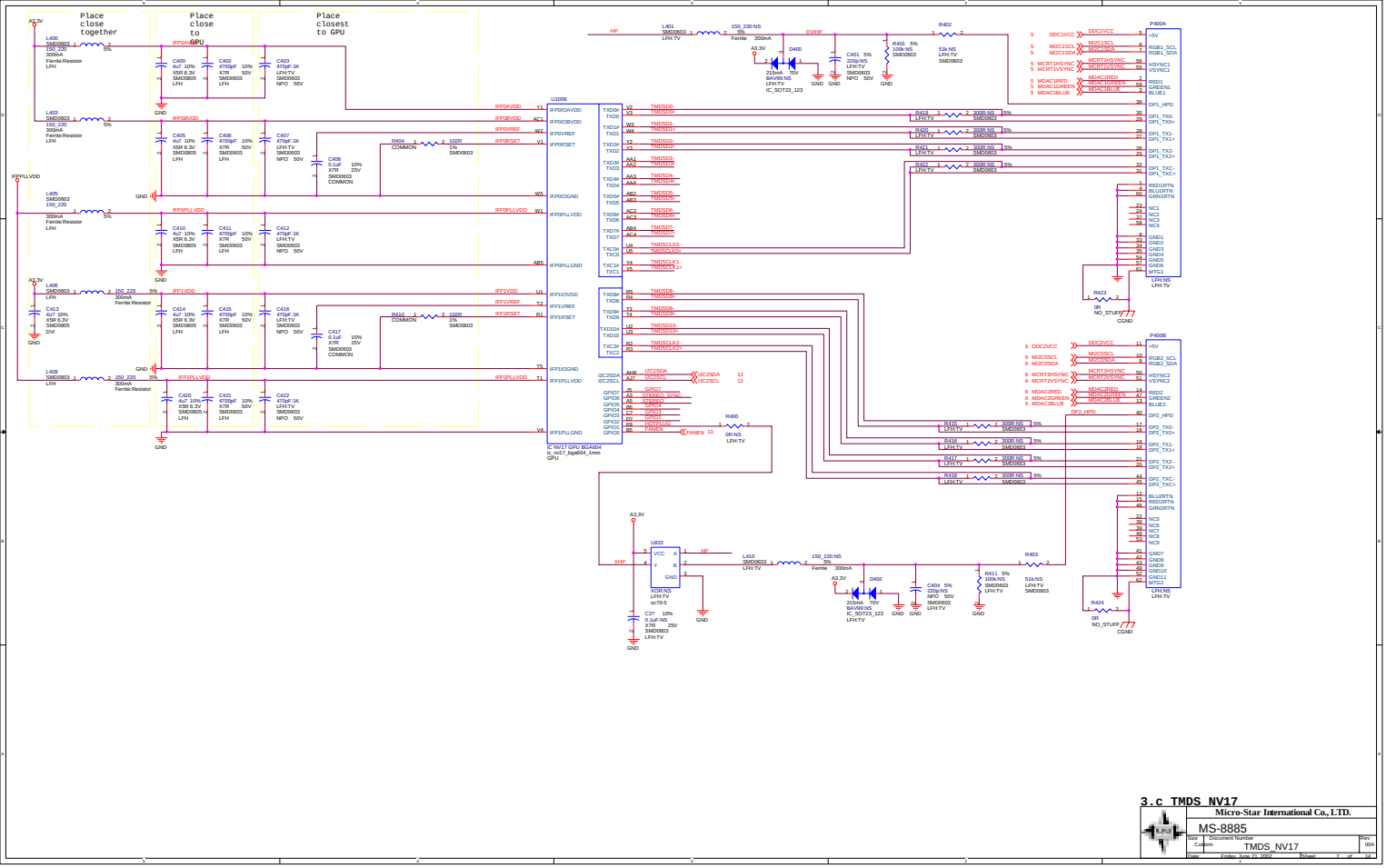
Place close together
Place close to GPU
Place closest to GPU
U100E
IC NV17 GPU BGA604
ic_nv17_bga604_1mm
GPU
P400A
P400B
3.c TMDS_NV17
Micro-Star International Co., LTD.
MS-8885
TMDS_NV17

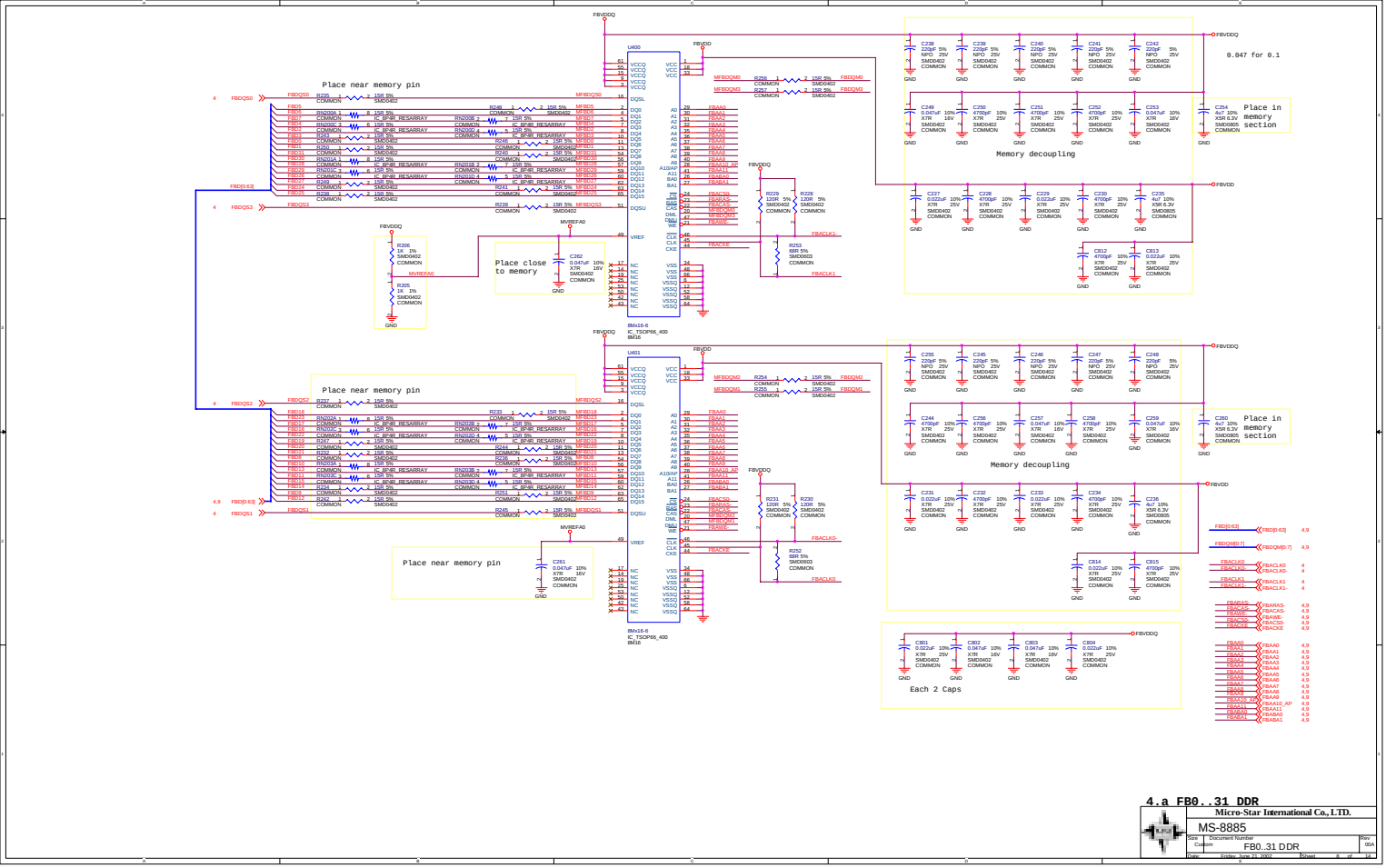

4.a FB0..31 DDR

Micro-Star International Co., LTD.

MS-8885

Size	Document Number	Rev
Custom	FB0..31 DDR	00A

Date: Friday, June 21, 2002 Sheet 8 of 14

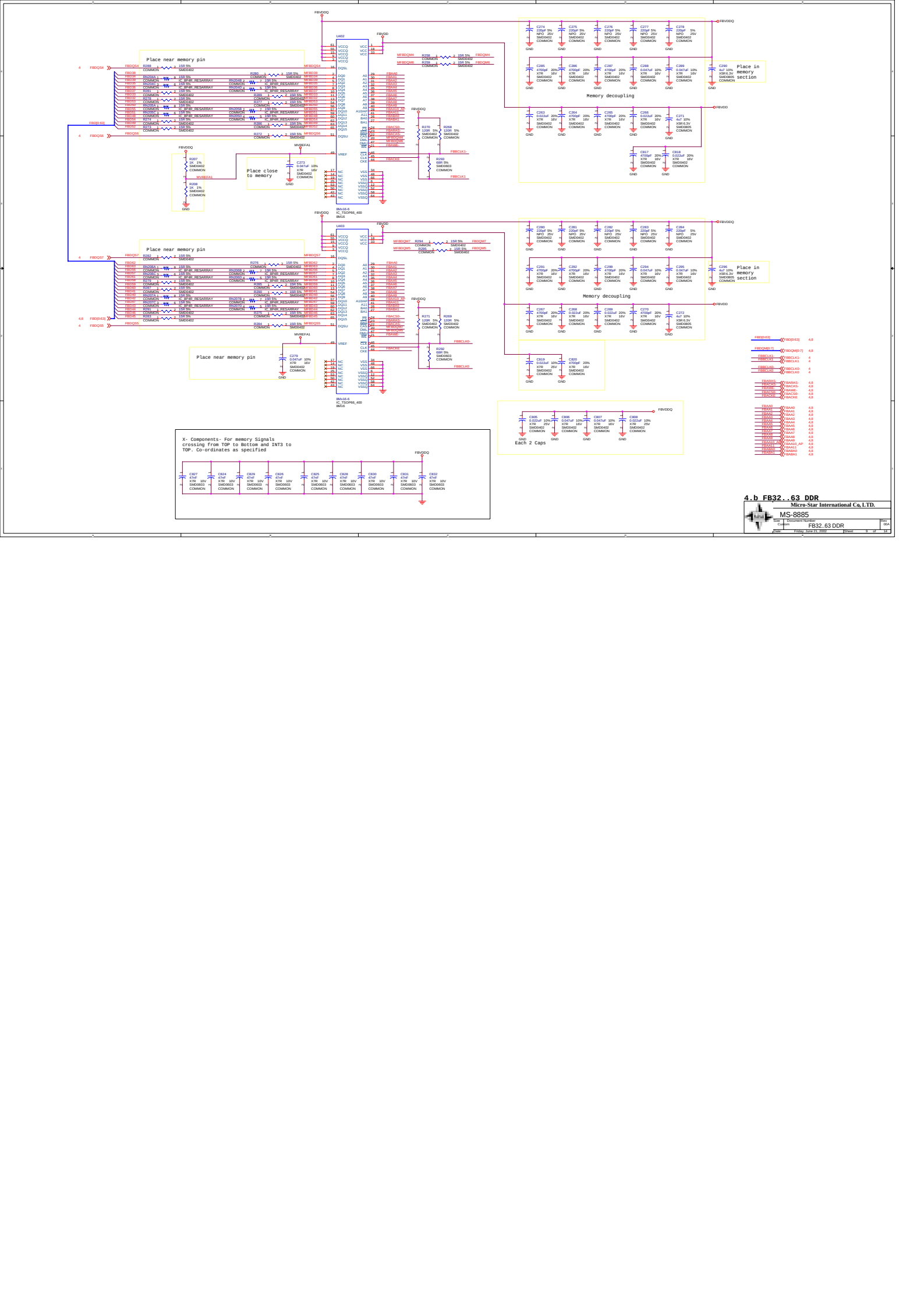
Place near memory pin
Place close to memory
Memory decoupling
Place in memory section
Each 2 Caps
X- Components- For memory Signals crossing from TOP to Bottom and INT3 to TOP. Co-ordinates as specified
4.b FB32..63 DDR
Micro-Star International Co, LTD.
MS-8885
FB32..63 DDR
Friday, June 21, 2002

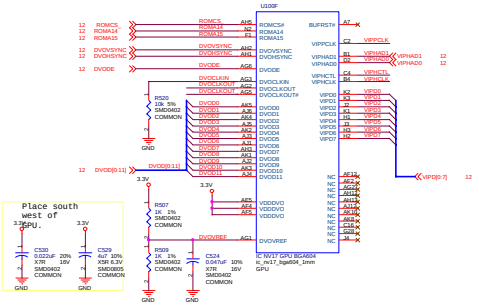

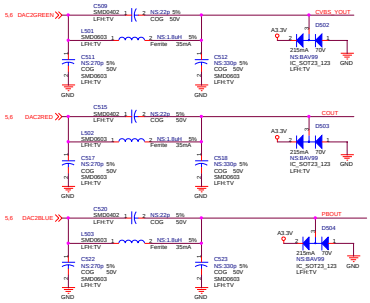

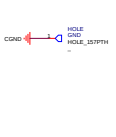

5. TV out,video capture,stereo

Micro-Star International Co., LTD.			
MS-8885			
Size: Custom	Document Number: TV out , video capture		Rev: 00A
Date: Friday, June 21, 2002	Sheet 10 of 14		

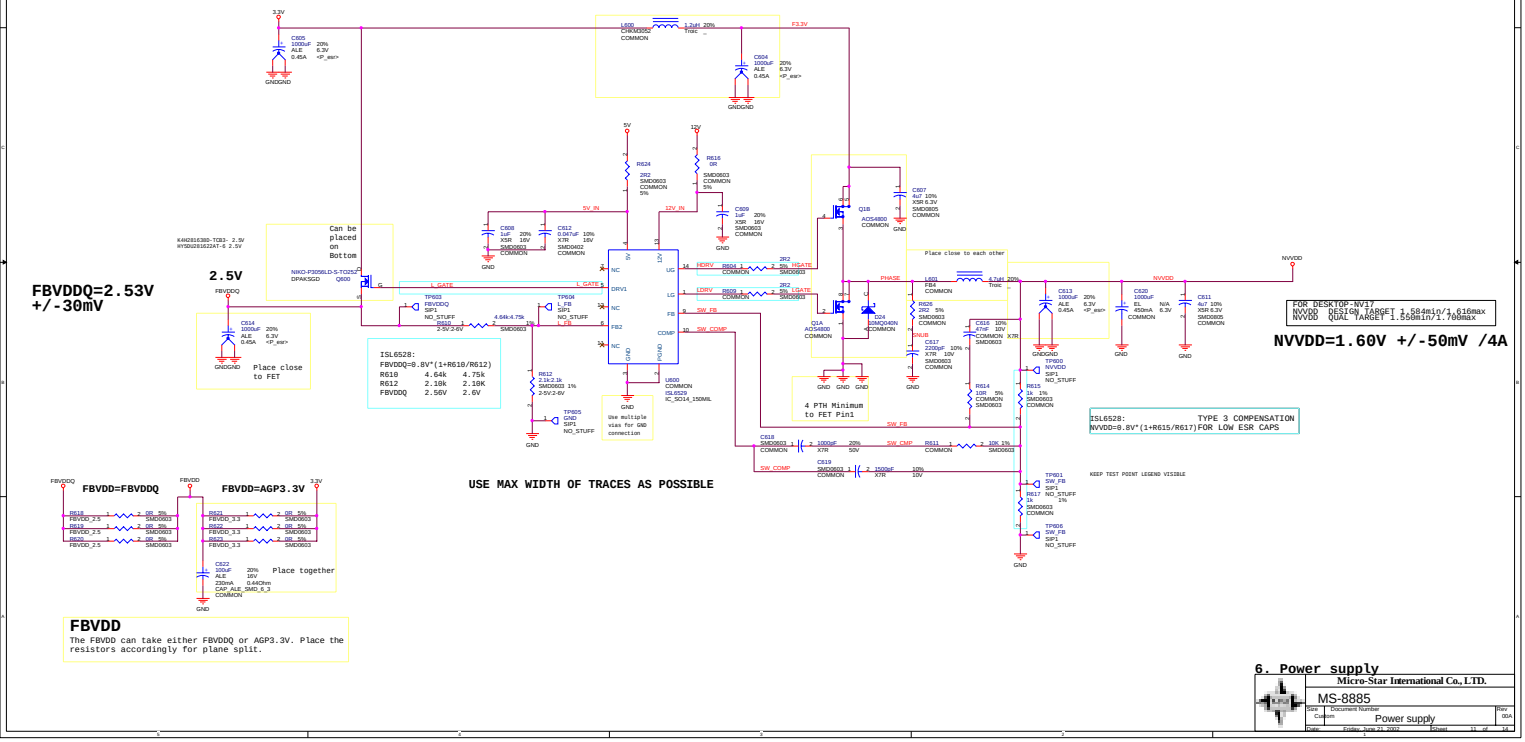

6. Power supply

Micro-Star International Co., LTD.

MS-8885

Size: Custom | Document Number: Power supply | Rev: 00A

Date: Friday, June 21, 2002 | Sheet 11 of 14

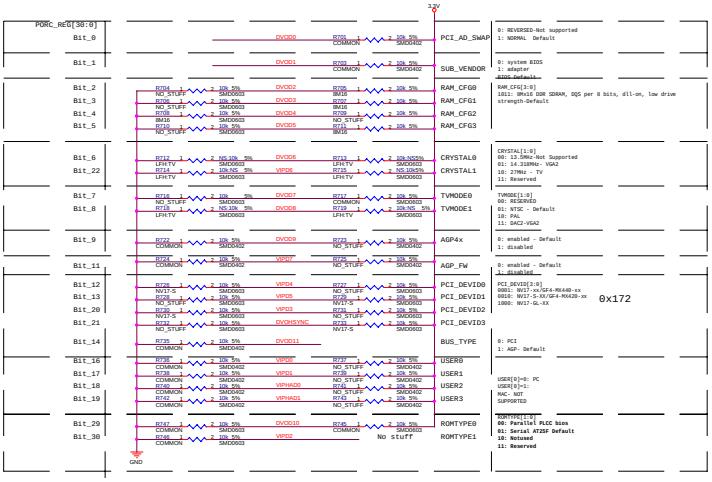

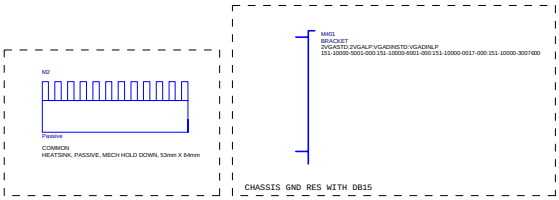

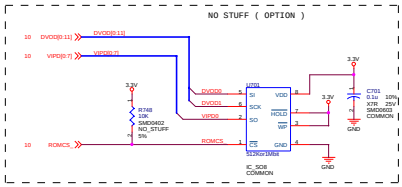

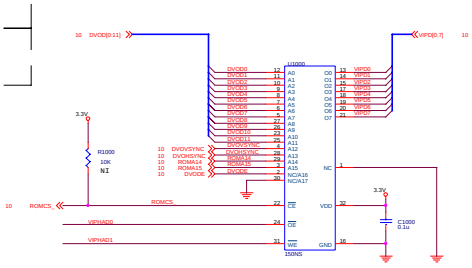

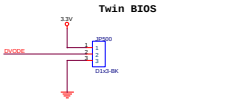

7. BIOS, Strapping, Mech

Micro-Star International Co., LTD.			
MS-8885			
Size: Custom	Document Number: BIOS, Strapping, Mech		Rev: 00A
Date: Friday, June 21, 2002		Sheet: 12 of 14	

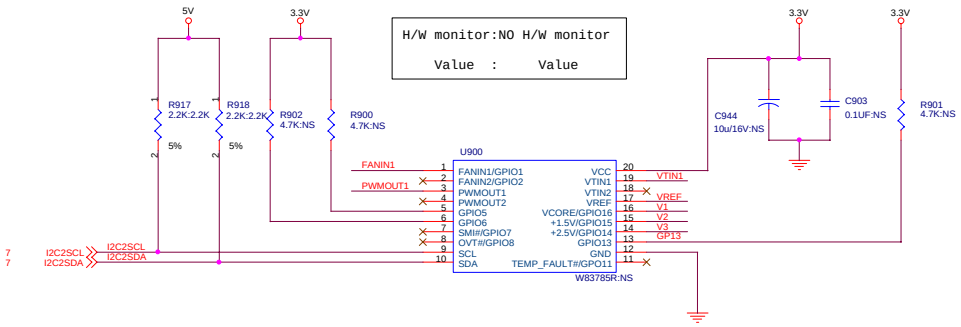

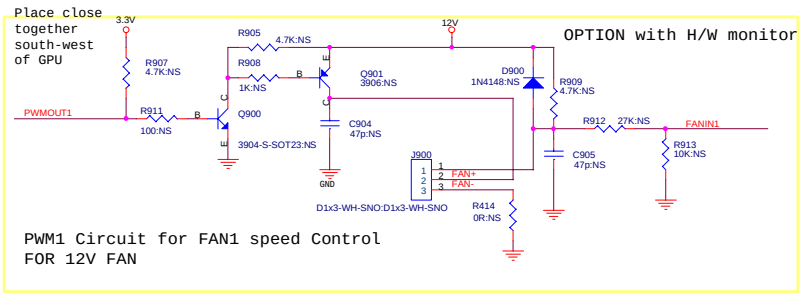

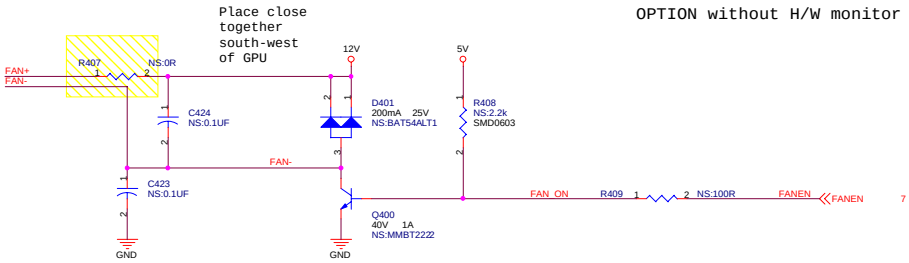

VOLTAGE SENSORING CIRCUIT

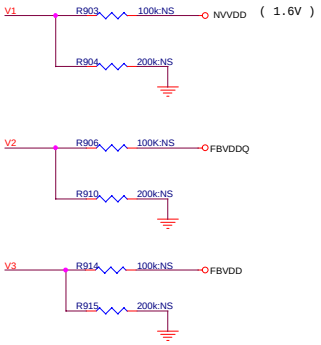

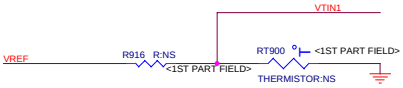

TEMPERATURE SENSORING CIRCUIT

Micro-Star International Co., LTD.		
MS-8885		
Size: B	Document Number: H/W Monitor	Rev: 300
Date: Friday, June 21, 2002	Sheet 13 of 14	

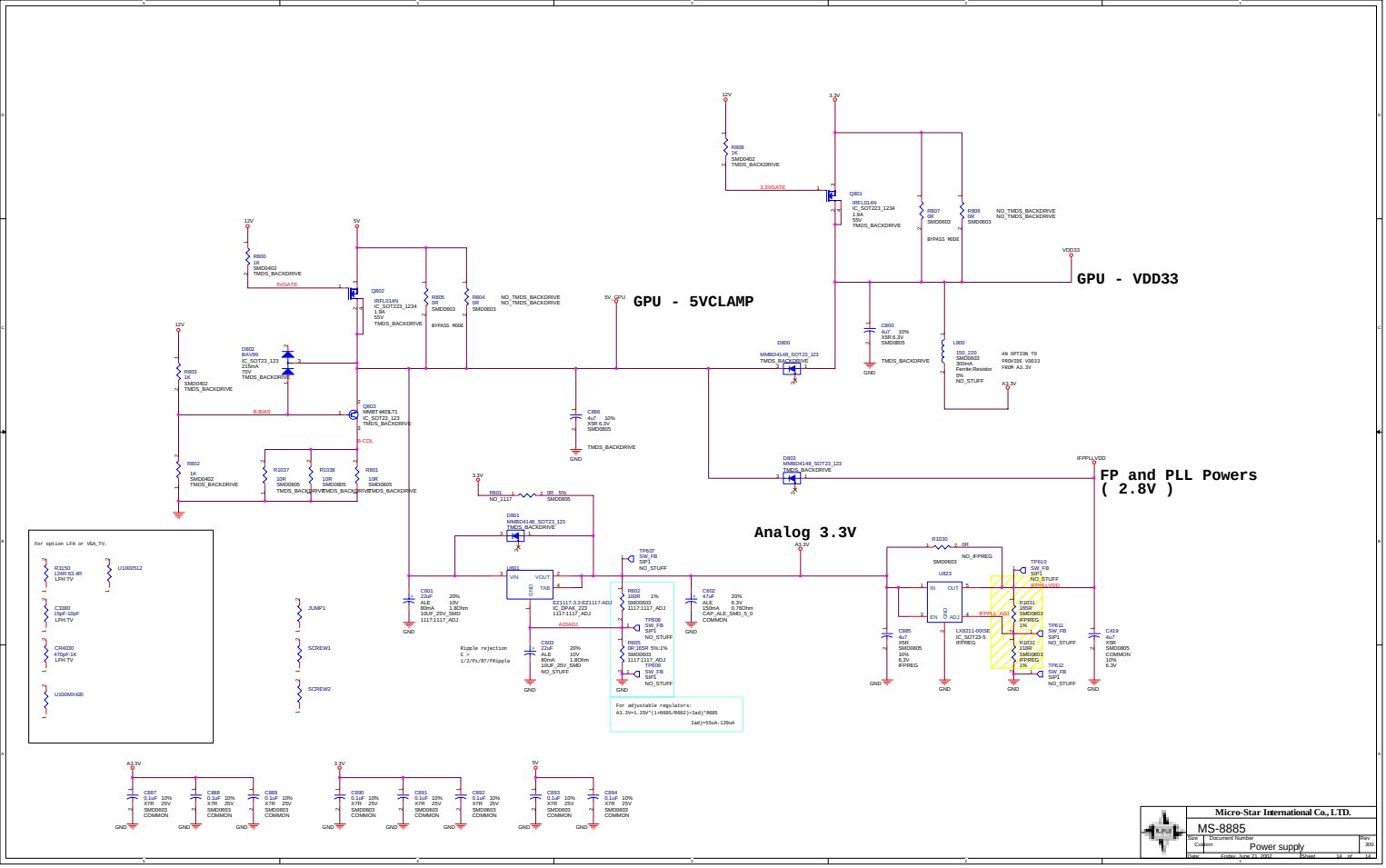
GPU - VDD33
GPU - 5VCLAMP
FP and PLL Powers
(2.8V)
Analog 3.3V
For option LFH or VGA_TV.
For adjustable regulators:
A3.3V=1.25V*(1+R885/R602)+Iadj*R885
Iadj=55uA-120uA
Ripple rejection
C =
1/2/PI/R7/Ripple
Micro-Star International Co., LTD.
MS-8885
Power supply
Date: Friday, June 21, 2002
Sheet 14 of 14