PG401 A02

4GB GDDR5, 256b, 128Mx32

Tall DVI-I + DP + DP + DP/HDMI + DP

TABLE OF CONTENTS

Page	Description
1	Table of Contents
2	Block Diagram
3	PCI Express
4	MEMORY: GPU Partition A/B
5	MEMORY: FBA[31:0]
6	MEMORY: FBA[63:32]
7	MEMORY: FBB[31:0]
8	MEMORY: FBB[63:32]
9	MEMORY: GPU Partition C/D
10	MEMORY: FBC[31:0]
11	MEMORY: FBC[63:32]
12	MEMORY: FBD[31:0]
13	MEMORY: FBD[63:32]
14	GPU PWR and GND
15	GPU Decoupling
16	DACA Interface
17	IFPAB DVI-I-DL
18	IFPEF with IFPE DP
19	IFPF DP
20	IFPC HDMI/DP
21	IFPD DP
22	MIOA/B Interface and Frame Lock
23	MISC1: Fan, Thermal, JTAG, GPIO, Stereo
24	MISC2: ROM, XTAL, Straps
25	PS: 5V, PEX_VDD
26	PS: FBVDD/Q
27	PS: NVVDD Controller
28	PS: NVVDD Phase 1,2
29	PS: NVVDD Phase 3,4
30	PS: NVVDD Phase 5, 6
31	PS: Dynamic Power Balance Logic
32	PS: Dynamic Power Balance Phases
33	PS: Inputs, Filtering, and Monitoring
34	PS: Shutdown
35	PS: 12V Current Steering PSI Control and LED
36	MECH: Bracket/Thermal
37	MICROCONTROLLER

MICRO-STAR INT'L CO.,LTD

MS-V317

Size: Custom | Document Description: Table of contents | Rev: 1.0

Date: Wednesday, August 20, 2014 | Sheet 1 of 37

NVIDIA CORPORATION

2701 SAN TOMAS EXPRESSWAY

SANTA CLARA, CA 95050, USA

ASSEMBLY	BASE LEVEL GENERIC SCHEMATIC ONLY
PAGE DETAIL	Table of Contents

NV_PN	600-1G401-BASE-QS1		
PCB REV	PG401-A02	PAGE	1 OF 37
BOM REV	A	DATE	04-AUG-2014

ALL NVIDIA DESIGN SPECIFICATIONS, REFERENCE SPECIFICATIONS, REFERENCE BOARDS, FILES, DRAWINGS, DIAGNOSTICS, LISTS AND OTHER DOCUMENTS OR INFORMATION (TOGETHER AND SEPARATELY, 'MATERIALS') ARE BEING PROVIDED 'AS IS'. THE MATERIALS MAY CONTAIN KNOWN AND UNKNOWN VIOLATIONS OR DEVIATIONS OF INDUSTRY STANDARDS AND SPECIFICATIONS. NVIDIA MAKES NO WARRANTIES, EXPRESSED, IMPLIED, STATUTORY OR OTHERWISE WITH RESPECT TO THE MATERIALS OR OTHERWISE, AND EXPRESSLY DISCLAIMS ALL IMPLIED WARRANTIES INCLUDING, WITHOUT LIMITATION, THE WARRANTIES OF DESIGN, OF NONINFRINGEMENT, MERCHANTABILITY OR FITNESS FOR A PARTICULAR PURPOSE, OR ARISING FROM A COURSE OF DEALING, TRADE USAGE, TRADE PRACTICE, OR INDUSTRY STANDARDS.

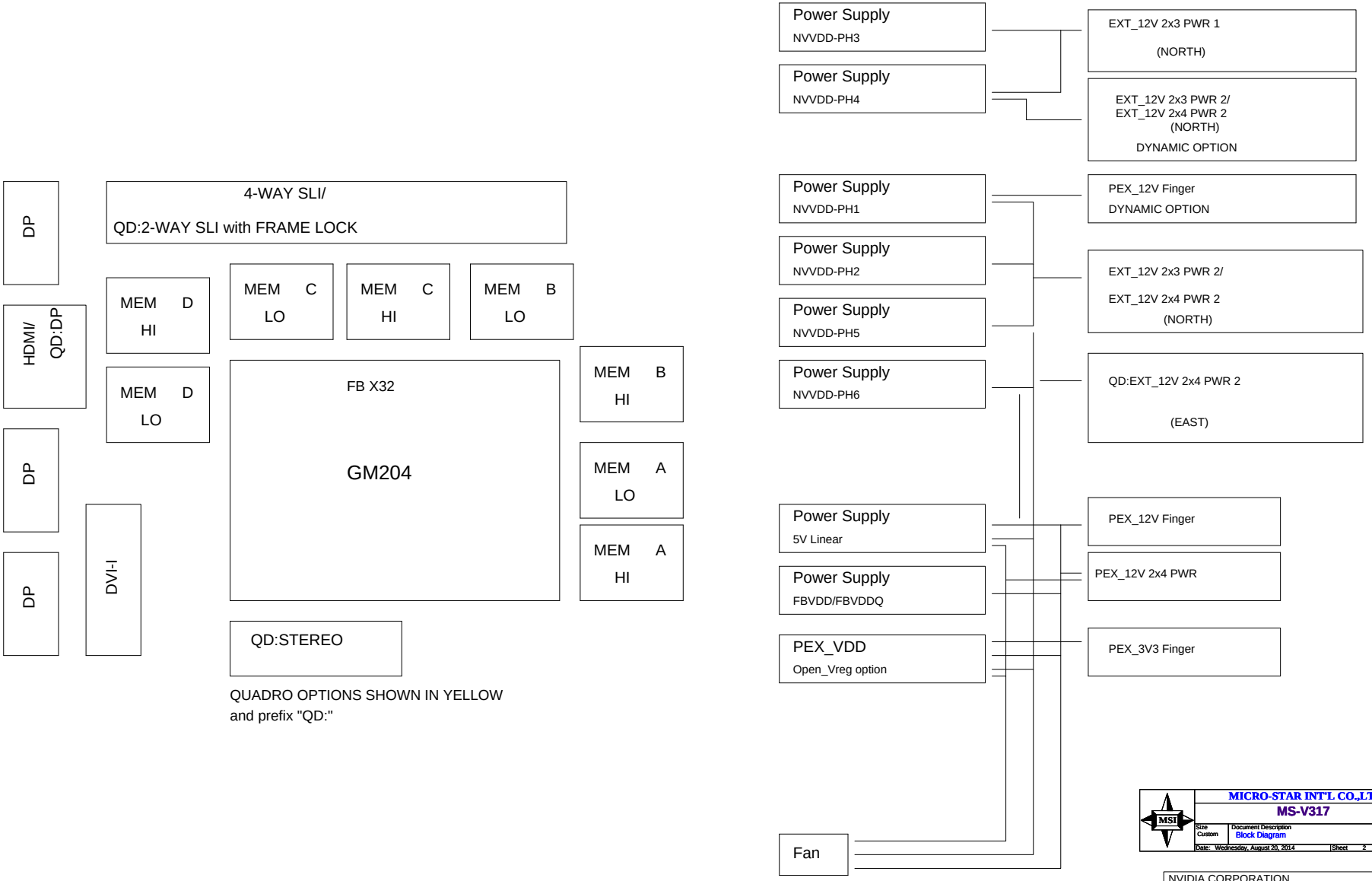

ASSEMBLY	BASE LEVEL GENERIC SCHEMATIC ONLY
PAGE DETAIL	Block Diagram

MICRO-STAR INT'L CO.,LTD
MS-V317

Size	Document Description	Rev
Custom	Block Diagram	1.0

Date: Wednesday, August 20, 2014 Sheet 2 of 37

NVIDIA CORPORATION
2701 SAN TOMAS EXPRESSWAY
SANTA CLARA, CA 95050, USA

NV_PN	600-1G401-BASE-QS1		
PCB REV	PG401-A02	PAGE	2 OF 37
BOM REV	A	DATE	04-AUG-2014

ALL NVIDIA DESIGN SPECIFICATIONS, REFERENCE SPECIFICATIONS, REFERENCE BOARDS, FILES, DRAWINGS, DIAGNOSTICS, LISTS AND OTHER DOCUMENTS OR INFORMATION (TOGETHER AND SEPARATELY, 'MATERIALS') ARE BEING PROVIDED 'AS IS'. THE MATERIALS MAY CONTAIN KNOWN AND UNKNOWN VIOLATIONS OR DEVIATIONS OF INDUSTRY STANDARDS AND SPECIFICATIONS. NVIDIA MAKES NO WARRANTIES, EXPRESSED, IMPLIED, STATUTORY OR OTHERWISE WITH RESPECT TO THE MATERIALS OR OTHERWISE, AND EXPRESSLY DISCLAIMS ALL IMPLIED WARRANTIES INCLUDING, WITHOUT LIMITATION, THE WARRANTIES OF DESIGN, OF NONINFRINGEMENT, MERCHANTABILITY OR FITNESS FOR A PARTICULAR PURPOSE, OR ARISING FROM A COURSE OF DEALING, TRADE USAGE, TRADE PRACTICE, OR INDUSTRY STANDARDS.

Page3: PCI Express

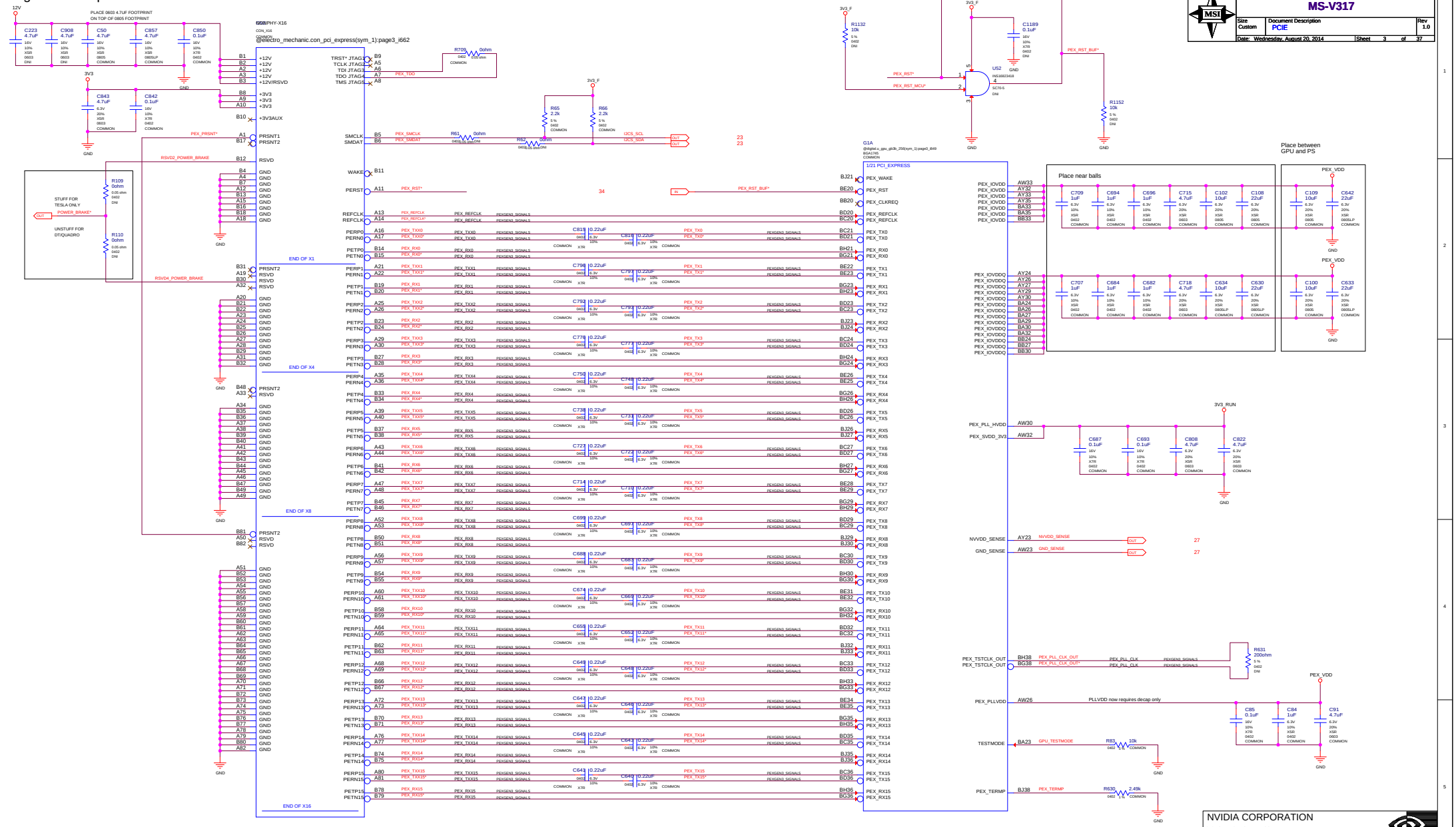

ALL NVIDIA DESIGN SPECIFICATIONS, REFERENCE SPECIFICATIONS, REFERENCE BOARDS, FILES, DRAWINGS, DIAGNOSTICS, LISTS AND OTHER DOCUMENTS OR INFORMATION (TOGETHER AND SEPARATELY, 'MATERIALS') ARE BEING PROVIDED 'AS IS'. THE MATERIALS MAY CONTAIN KNOWN AND UNKNOWN VIOLATIONS OR DEVIATIONS OF INDUSTRY STANDARDS AND SPECIFICATIONS. NVIDIA MAKES NO WARRANTIES, EXPRESSED, IMPLIED, STATUTORY OR OTHERWISE WITH RESPECT TO THE MATERIALS OR OTHERWISE, AND EXPRESSLY DISCLAIMS ALL IMPLIED WARRANTIES INCLUDING, WITHOUT LIMITATION, THE WARRANTIES OF DESIGN, OF NONINFRINGEMENT, MERCHANTABILITY OR FITNESS FOR A PARTICULAR PURPOSE, OR ARISING FROM A COURSE OF DEALING, TRADE USAGE, TRADE PRACTICE, OR INDUSTRY STANDARDS.

Page4: MEMORY: GPU Partition A/B

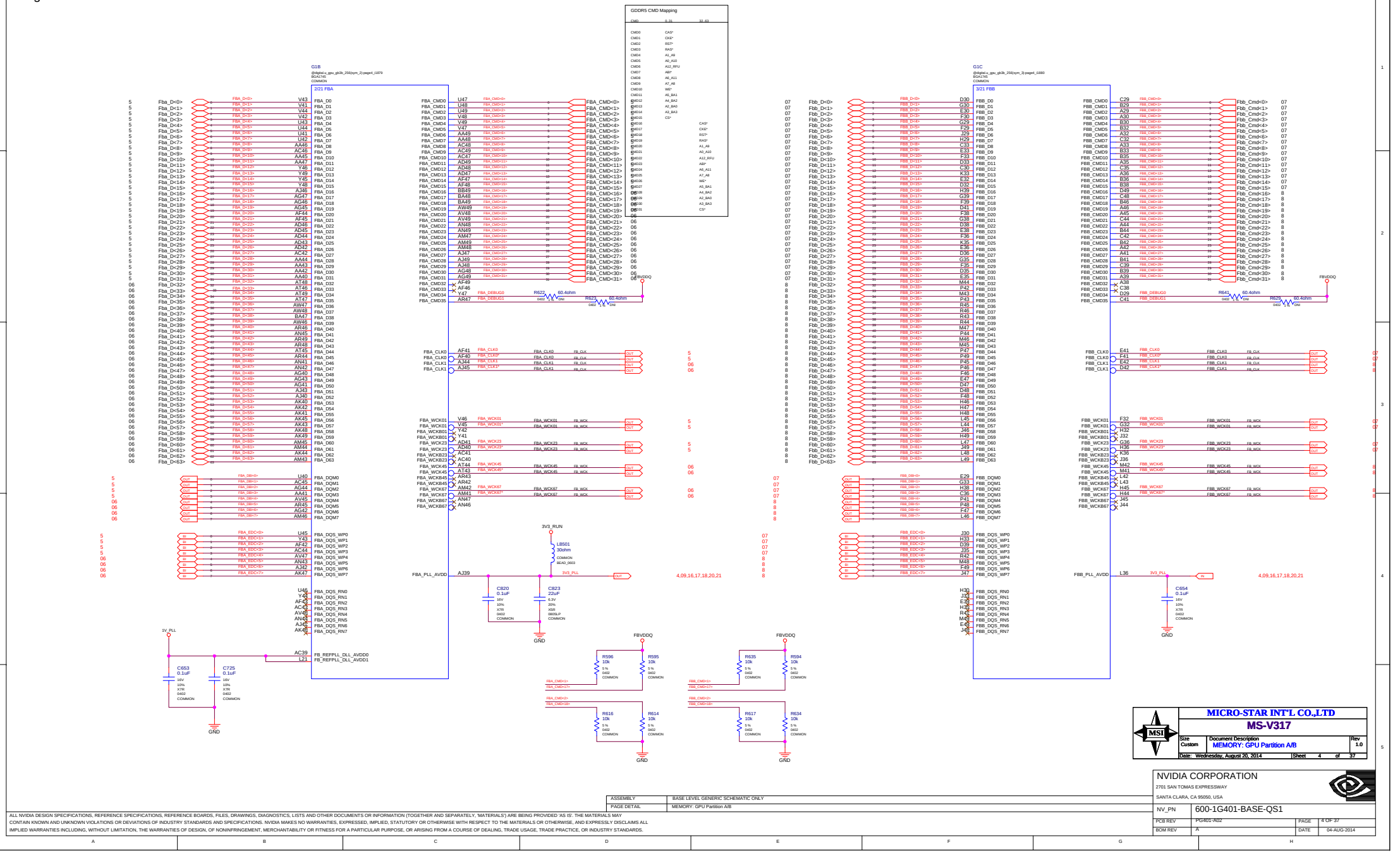

ALL NVIDIA DESIGN SPECIFICATIONS, REFERENCE SPECIFICATIONS, REFERENCE BOARDS, FILES, DRAWINGS, DIAGNOSTICS, LISTS AND OTHER DOCUMENTS OR INFORMATION (TOGETHER AND SEPARATELY, 'MATERIALS') ARE BEING PROVIDED 'AS IS'. THE MATERIALS MAY CONTAIN KNOWN AND UNKNOWN VIOLATIONS OR DEVIATIONS OF INDUSTRY STANDARDS AND SPECIFICATIONS. NVIDIA MAKES NO WARRANTIES, EXPRESSED, IMPLIED, STATUTORY OR OTHERWISE WITH RESPECT TO THE MATERIALS OR OTHERWISE, AND EXPRESSLY DISCLAIMS ALL IMPLIED WARRANTIES INCLUDING, WITHOUT LIMITATION, THE WARRANTIES OF DESIGN, OF NONINFRINGEMENT, MERCHANTABILITY OR FITNESS FOR A PARTICULAR PURPOSE, OR ARISING FROM A COURSE OF DEALING, TRADE USAGE, TRADE PRACTICE, OR INDUSTRY STANDARDS.

Page5: MEMORY: FBA Partition 31..0

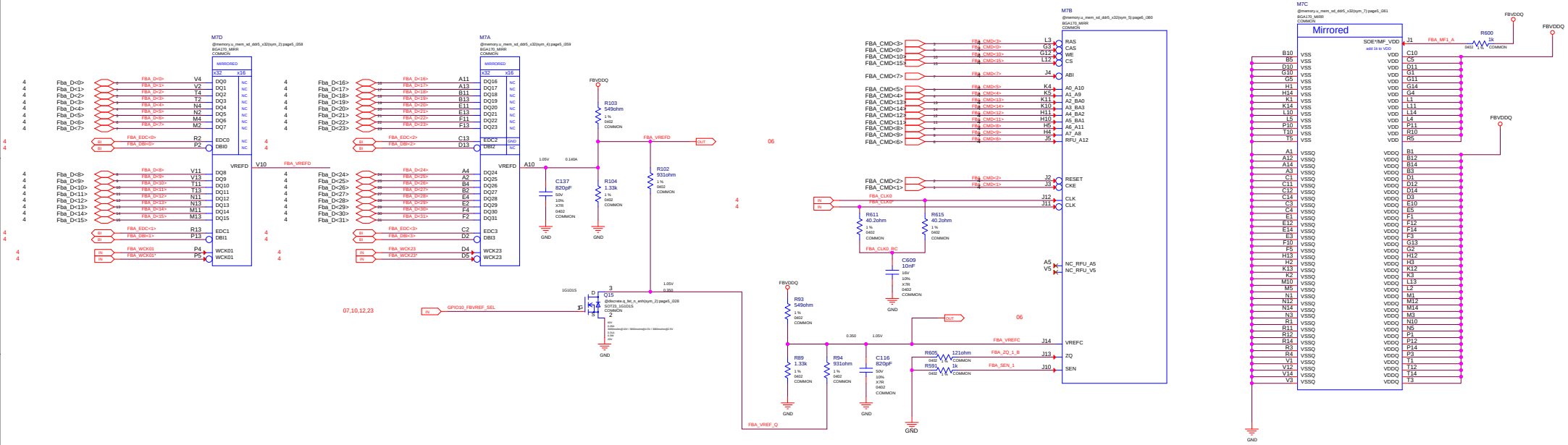

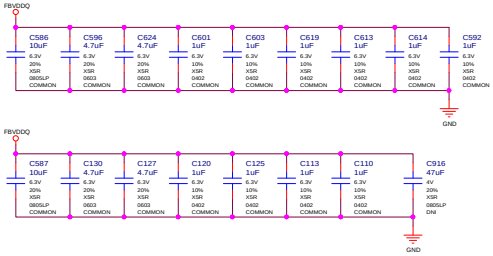

MICRO-STAR INT'L CO.,LTD	
MS-V317	
Size: Custom	Document Description: 5: MEMORY: FBA Partition 31..0
Rev: 10	
Date: Wednesday, August 20, 2014	Sheet 5 of 37

ASSEMBLY	BASE LEVEL GENERIC SCHEMATIC ONLY
PAGE DETAIL	MEMORY: FBA[31:0]

ALL NVIDIA DESIGN SPECIFICATIONS, REFERENCE SPECIFICATIONS, REFERENCE BOARDS, FILES, DRAWINGS, DIAGNOSTICS, LISTS AND OTHER DOCUMENTS OR INFORMATION (TOGETHER AND SEPARATELY, 'MATERIALS') ARE BEING PROVIDED 'AS IS'. THE MATERIALS MAY CONTAIN KNOWN AND UNKNOWN VIOLATIONS OR DEVIATIONS OF INDUSTRY STANDARDS AND SPECIFICATIONS. NVIDIA MAKES NO WARRANTIES, EXPRESSED, IMPLIED, STATUTORY OR OTHERWISE WITH RESPECT TO THE MATERIALS OR OTHERWISE, AND EXPRESSLY DISCLAIMS ALL IMPLIED WARRANTIES INCLUDING, WITHOUT LIMITATION, THE WARRANTIES OF DESIGN, OF NONINFRINGEMENT, MERCHANTABILITY OR FITNESS FOR A PARTICULAR PURPOSE, OR ARISING FROM A COURSE OF DEALING, TRADE USAGE, TRADE PRACTICE, OR INDUSTRY STANDARDS.

NVIDIA CORPORATION
2701 SAN TOMAS EXPRESSWAY
SANTA CLARA, CA 95050, USA

NV_PN	600-1G401-BASE-QS1		
PCB REV	PG401-A02	PAGE	5 OF 37
BOM REV	A	DATE	04-AUG-2014

Page6: MEMORY: FBA Partition 63..32

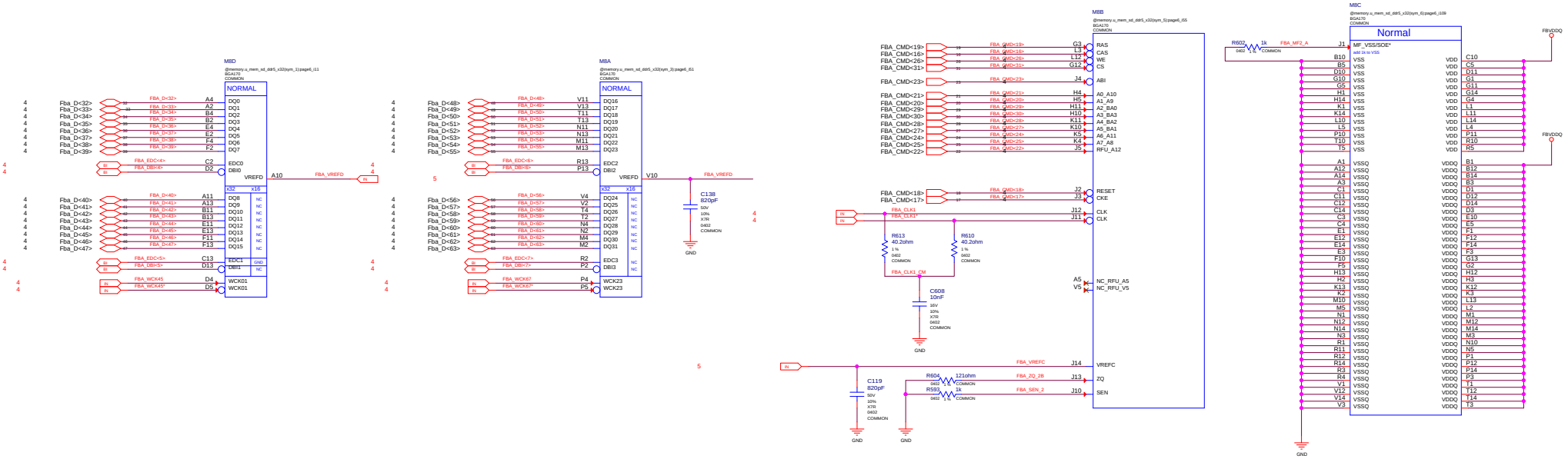

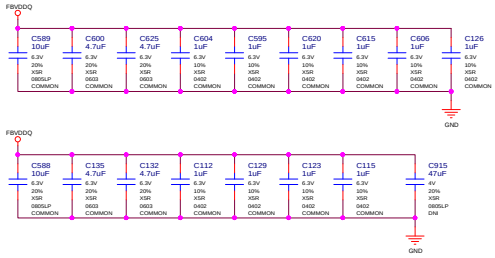

ASSEMBLY	BASE LEVEL GENERIC SCHEMATIC ONLY
PAGE DETAIL	MEMORY: FBA[63:32]

ALL NVIDIA DESIGN SPECIFICATIONS, REFERENCE SPECIFICATIONS, REFERENCE BOARDS, FILES, DRAWINGS, DIAGNOSTICS, LISTS AND OTHER DOCUMENTS OR INFORMATION (TOGETHER AND SEPARATELY, 'MATERIALS') ARE BEING PROVIDED 'AS IS'. THE MATERIALS MAY CONTAIN KNOWN AND UNKNOWN VIOLATIONS OR DEVIATIONS OF INDUSTRY STANDARDS AND SPECIFICATIONS. NVIDIA MAKES NO WARRANTIES, EXPRESSED, IMPLIED, STATUTORY OR OTHERWISE WITH RESPECT TO THE MATERIALS OR OTHERWISE, AND EXPRESSLY DISCLAIMS ALL IMPLIED WARRANTIES INCLUDING, WITHOUT LIMITATION, THE WARRANTIES OF DESIGN, OF NONINFRINGEMENT, MERCHANTABILITY OR FITNESS FOR A PARTICULAR PURPOSE, OR ARISING FROM A COURSE OF DEALING, TRADE USAGE, TRADE PRACTICE, OR INDUSTRY STANDARDS.

MICRO-STAR INT'L CO.,LTD

MS-V317

Size	Document Description	Rev
Custom	6: MEMORY: FBA Partition 63..32	1.0

Date: Wednesday, August 20, 2014 Sheet 06 of 37

NVIDIA CORPORATION

2701 SAN TOMAS EXPRESSWAY

SANTA CLARA, CA 95050, USA

NV_PN	600-1G401-BASE-QS1		
PCB REV	PG401-A02	PAGE	6 OF 37
BOM REV	A	DATE	04-AUG-2014

Page7: MEMORY: FBB Partition 31..0

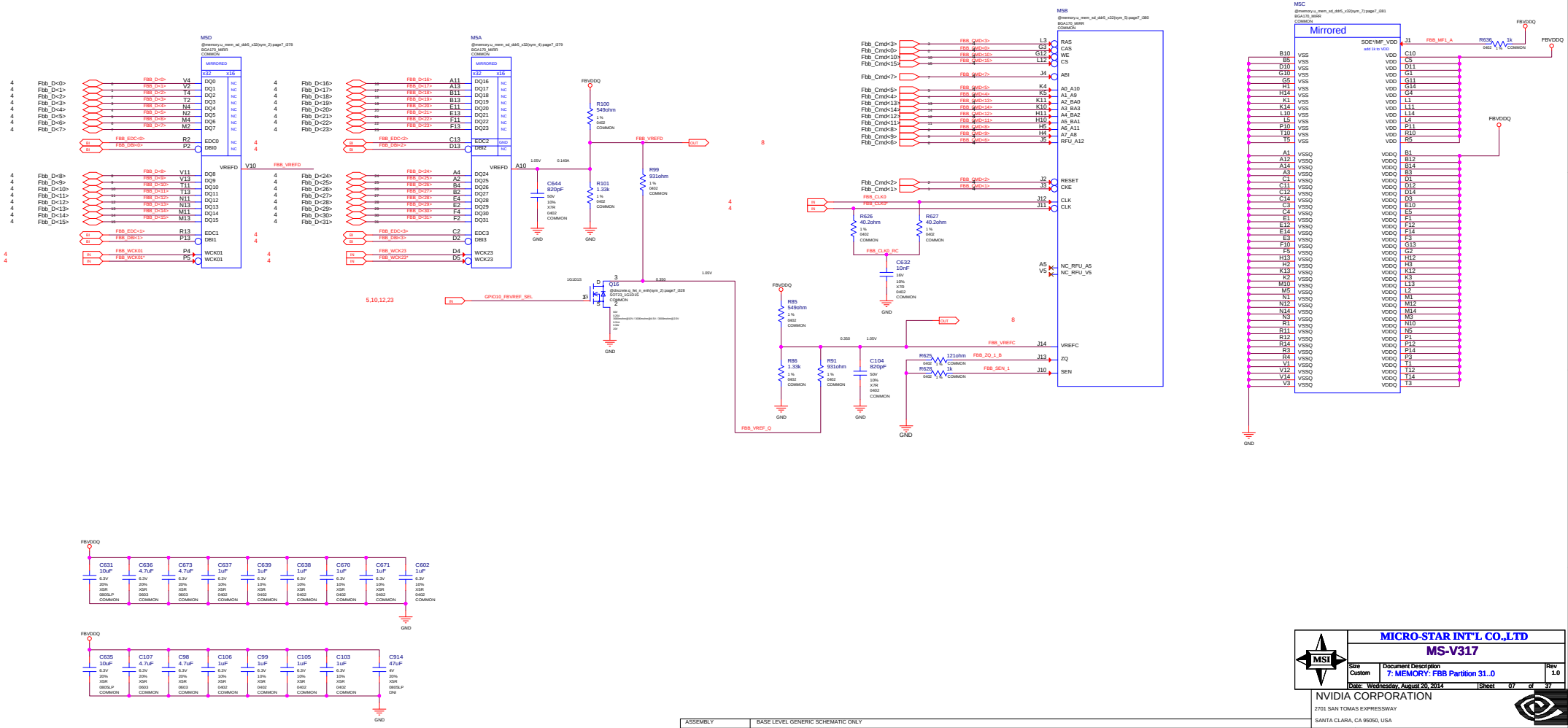

ASSEMBLY	BASE LEVEL GENERIC SCHEMATIC ONLY
PAGE DETAIL	MEMORY: FBB[31:0]

ALL NVIDIA DESIGN SPECIFICATIONS, REFERENCE SPECIFICATIONS, REFERENCE BOARDS, FILES, DRAWINGS, DIAGNOSTICS, LISTS AND OTHER DOCUMENTS OR INFORMATION (TOGETHER AND SEPARATELY, 'MATERIALS') ARE BEING PROVIDED 'AS IS'. THE MATERIALS MAY CONTAIN KNOWN AND UNKNOWN VIOLATIONS OR DEVIATIONS OF INDUSTRY STANDARDS AND SPECIFICATIONS. NVIDIA MAKES NO WARRANTIES, EXPRESSED, IMPLIED, STATUTORY OR OTHERWISE WITH RESPECT TO THE MATERIALS OR OTHERWISE, AND EXPRESSLY DISCLAIMS ALL IMPLIED WARRANTIES INCLUDING, WITHOUT LIMITATION, THE WARRANTIES OF DESIGN, OF NONINFRINGEMENT, MERCHANTABILITY OR FITNESS FOR A PARTICULAR PURPOSE, OR ARISING FROM A COURSE OF DEALING, TRADE USAGE, TRADE PRACTICE, OR INDUSTRY STANDARDS.

MICRO-STAR INT'L CO.,LTD

MS-V317

Size	Document Description	Rev
Custom	7: MEMORY: FBB Partition 31..0	1.0

Date: Wednesday, August 20, 2014 Sheet 07 of 37

NVIDIA CORPORATION

2701 SAN TOMAS EXPRESSWAY

SANTA CLARA, CA 95050, USA

NV_PN	600-1G401-BASE-QS1		
PCB REV	PG401-A02	PAGE	7 OF 37
BOM REV	A	DATE	04-AUG-2014

Page8: MEMORY: FBB Partition 63..32

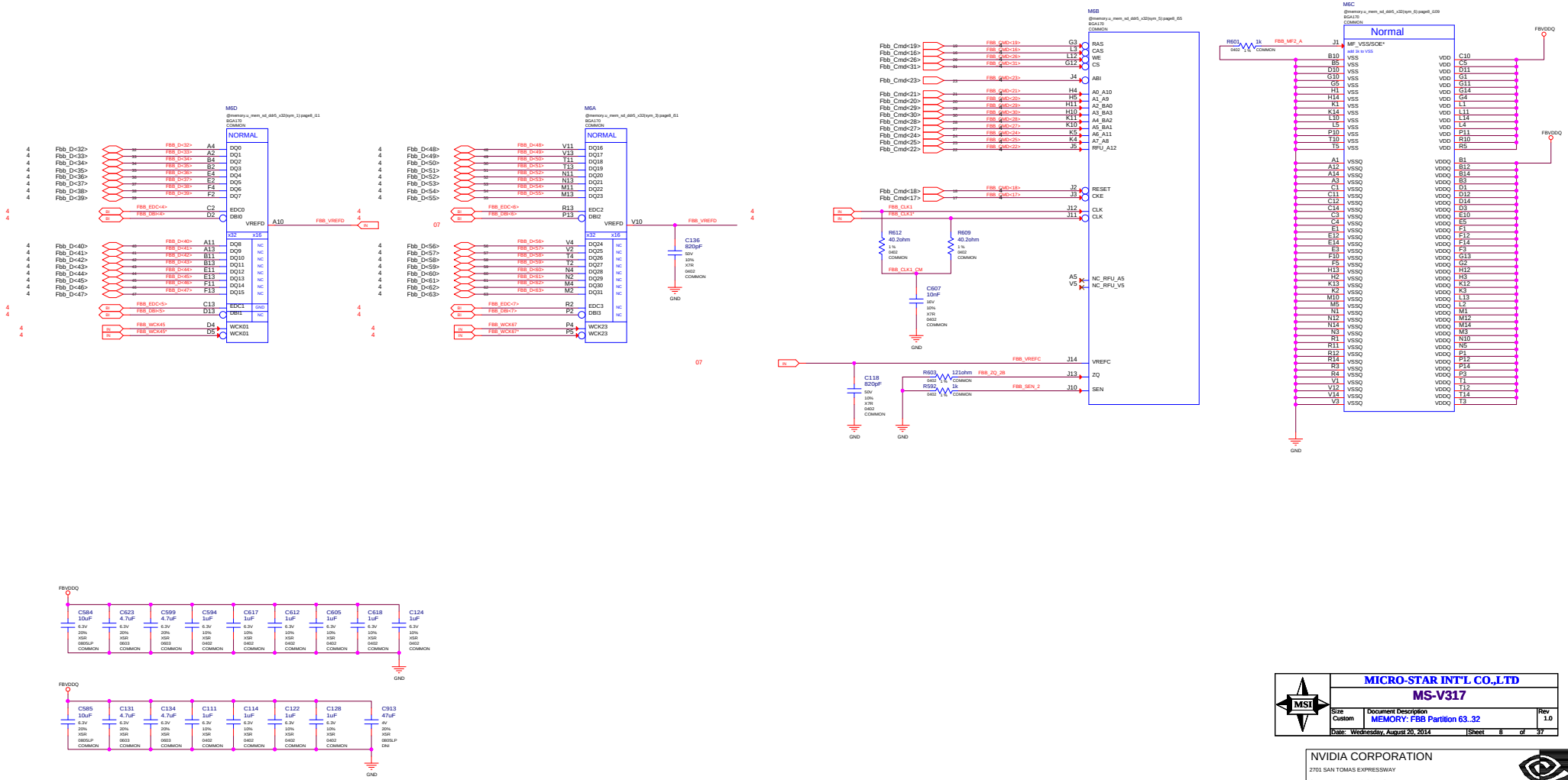

ASSEMBLY	BASE LEVEL GENERIC SCHEMATIC ONLY
PAGE DETAIL	MEMORY: FBB[63:32]

ALL NVIDIA DESIGN SPECIFICATIONS, REFERENCE SPECIFICATIONS, REFERENCE BOARDS, FILES, DRAWINGS, DIAGNOSTICS, LISTS AND OTHER DOCUMENTS OR INFORMATION (TOGETHER AND SEPARATELY, 'MATERIALS') ARE BEING PROVIDED 'AS IS'. THE MATERIALS MAY CONTAIN KNOWN AND UNKNOWN VIOLATIONS OR DEVIATIONS OF INDUSTRY STANDARDS AND SPECIFICATIONS. NVIDIA MAKES NO WARRANTIES, EXPRESSED, IMPLIED, STATUTORY OR OTHERWISE WITH RESPECT TO THE MATERIALS OR OTHERWISE, AND EXPRESSLY DISCLAIMS ALL IMPLIED WARRANTIES INCLUDING, WITHOUT LIMITATION, THE WARRANTIES OF DESIGN, OF NONINFRINGEMENT, MERCHANTABILITY OR FITNESS FOR A PARTICULAR PURPOSE, OR ARISING FROM A COURSE OF DEALING, TRADE USAGE, TRADE PRACTICE, OR INDUSTRY STANDARDS.

MICRO-STAR INT'L CO.,LTD

MS-V317

Size	Document Description	Rev
Custom	MEMORY: FBB Partition 63..32	1.0

Date: Wednesday, August 20, 2014 | Sheet 8 of 37

NVIDIA CORPORATION
2701 SAN TOMAS EXPRESSWAY
SANTA CLARA, CA 95050, USA

NV_PN	600-1G401-BASE-QS1		
PCB REV	PG401-A02	PAGE	8 OF 37
BOM REV	A	DATE	04-AUG-2014

Page9: MEMORY: GPU Partition C/D

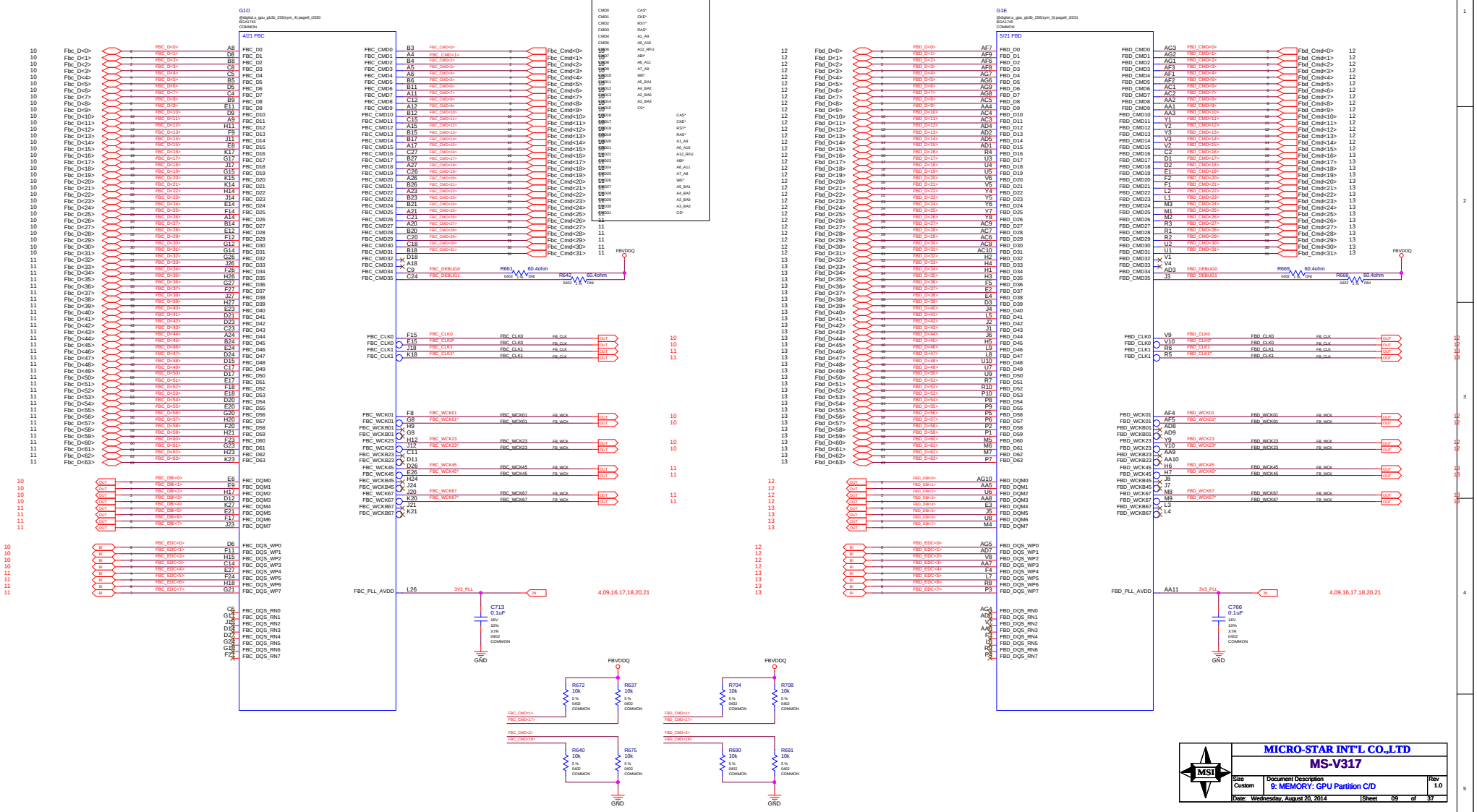

ASSEMBLY	BASE LEVEL GENERIC SCHEMATIC ONLY
PAGE DETAIL	MEMORY: GPU Partition C/D

MICRO-STAR INT'L CO.,LTD

MS-V317

Size	Document Description	Rev
Custom	9: MEMORY: GPU Partition C/D	1.0

Date: Wednesday, August 20, 2014 Sheet 09 of 37

ALL NVIDIA DESIGN SPECIFICATIONS, REFERENCE SPECIFICATIONS, REFERENCE BOARDS, FILES, DRAWINGS, DIAGNOSTICS, LISTS AND OTHER DOCUMENTS OR INFORMATION (TOGETHER AND SEPARATELY, 'MATERIALS') ARE BEING PROVIDED 'AS IS'. THE MATERIALS MAY CONTAIN KNOWN AND UNKNOWN VIOLATIONS OR DEVIATIONS OF INDUSTRY STANDARDS AND SPECIFICATIONS. NVIDIA MAKES NO WARRANTIES, EXPRESSED, IMPLIED, STATUTORY OR OTHERWISE WITH RESPECT TO THE MATERIALS OR OTHERWISE, AND EXPRESSLY DISCLAIMS ALL IMPLIED WARRANTIES INCLUDING, WITHOUT LIMITATION, THE WARRANTIES OF DESIGN, OF NONINFRINGEMENT, MERCHANTABILITY OR FITNESS FOR A PARTICULAR PURPOSE, OR ARISING FROM A COURSE OF DEALING, TRADE USAGE, TRADE PRACTICE, OR INDUSTRY STANDARDS.

NVIDIA CORPORATION
2701 SAN TOMAS EXPRESSWAY
SANTA CLARA, CA 95050, USA

NV_PN	600-1G401-BASE-QS1		
PCB REV	PG401-A02	PAGE	9 OF 37
BOM REV	A	DATE	04-AUG-2014

Page10: MEMORY: FBC Partition 31..0

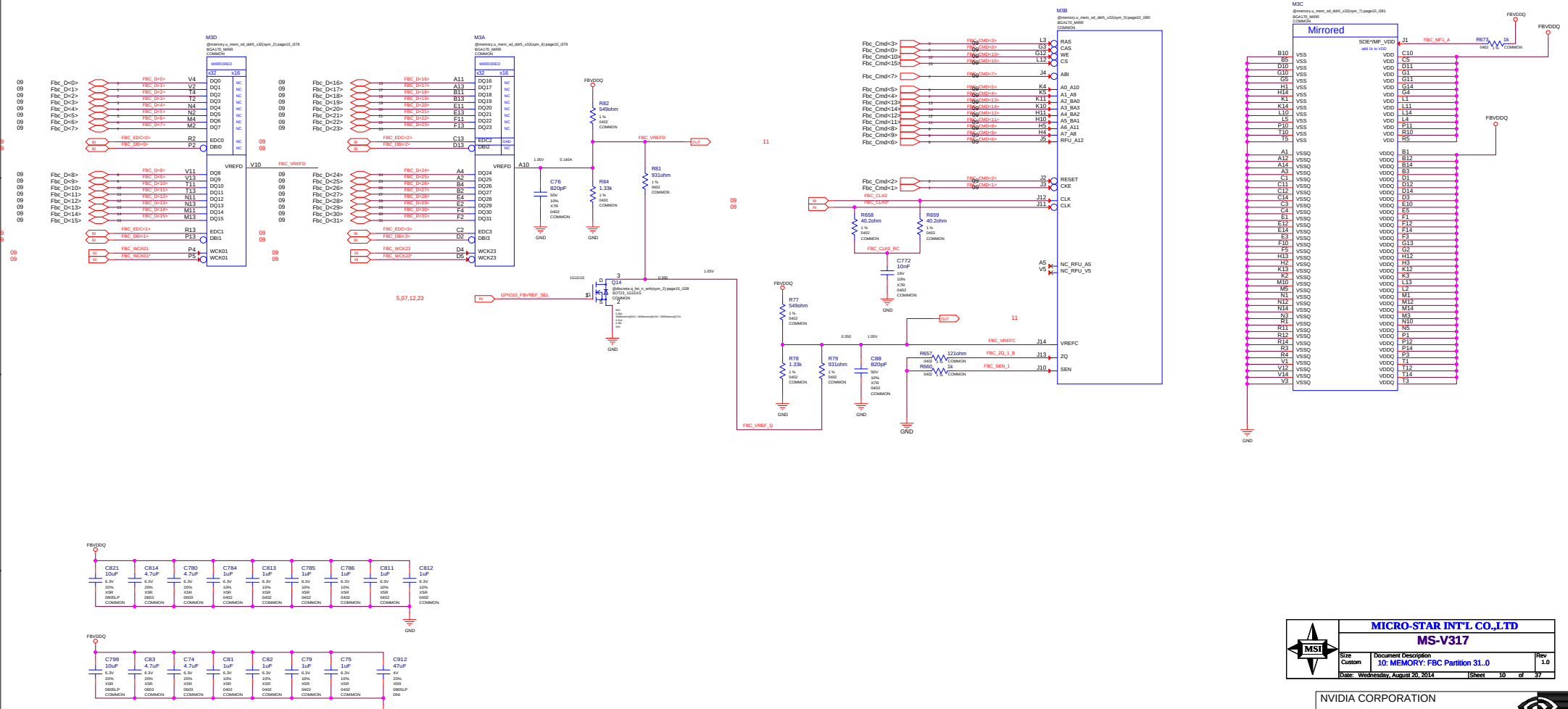

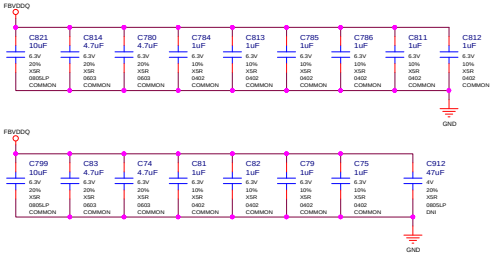

ASSEMBLY	BASE LEVEL GENERIC SCHEMATIC ONLY
PAGE DETAIL	MEMORY: FBC[31:0]

ALL NVIDIA DESIGN SPECIFICATIONS, REFERENCE SPECIFICATIONS, REFERENCE BOARDS, FILES, DRAWINGS, DIAGNOSTICS, LISTS AND OTHER DOCUMENTS OR INFORMATION (TOGETHER AND SEPARATELY, 'MATERIALS') ARE BEING PROVIDED 'AS IS'. THE MATERIALS MAY CONTAIN KNOWN AND UNKNOWN VIOLATIONS OR DEVIATIONS OF INDUSTRY STANDARDS AND SPECIFICATIONS. NVIDIA MAKES NO WARRANTIES, EXPRESSED, IMPLIED, STATUTORY OR OTHERWISE WITH RESPECT TO THE MATERIALS OR OTHERWISE, AND EXPRESSLY DISCLAIMS ALL IMPLIED WARRANTIES INCLUDING, WITHOUT LIMITATION, THE WARRANTIES OF DESIGN, OF NONINFRINGEMENT, MERCHANTABILITY OR FITNESS FOR A PARTICULAR PURPOSE, OR ARISING FROM A COURSE OF DEALING, TRADE USAGE, TRADE PRACTICE, OR INDUSTRY STANDARDS.

MICRO-STAR INT'L CO.,LTD

MS-V317

Size	Document Description	Rev
Custom	10: MEMORY: FBC Partition 31..0	1.0

Date: Wednesday, August 20, 2014 | Sheet 10 of 37

NVIDIA CORPORATION
2701 SAN TOMAS EXPRESSWAY
SANTA CLARA, CA 95050, USA

NV_PN	600-1G401-BASE-QS1		
PCB REV	PG401-A02	PAGE	10 OF 37
BOM REV	A	DATE	04-AUG-2014

Page11: MEMORY: FBC Partition 63..32

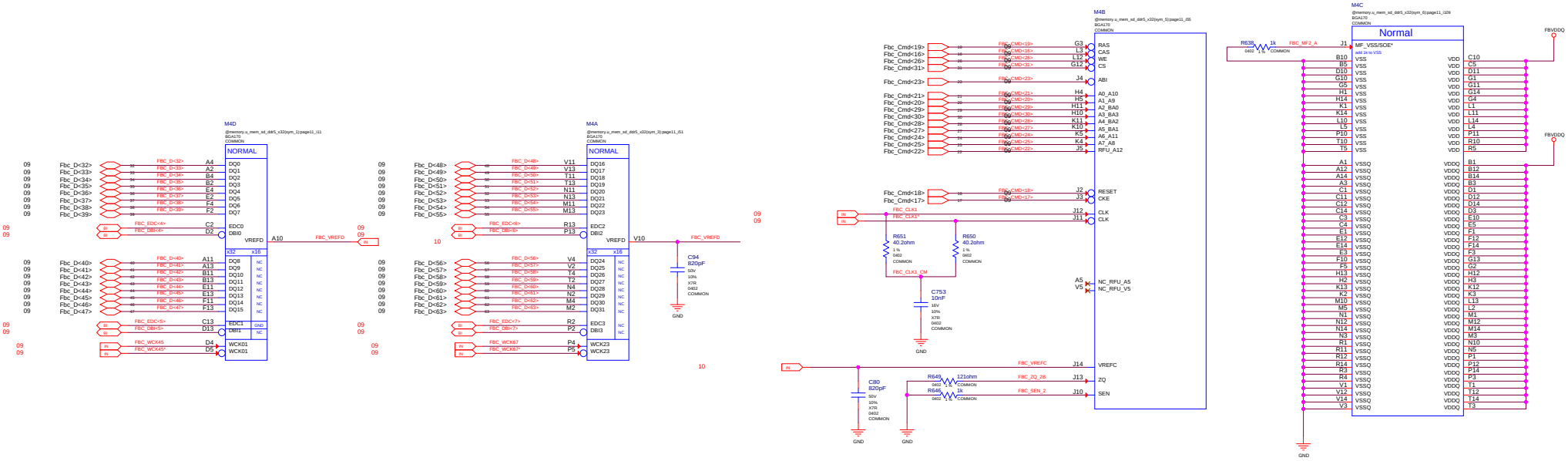

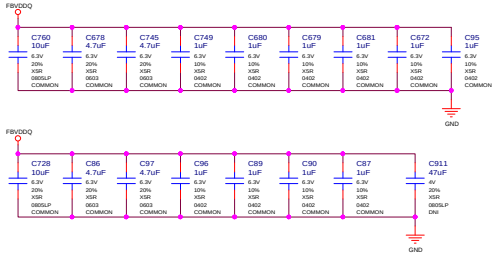

ASSEMBLY	BASE LEVEL GENERIC SCHEMATIC ONLY
PAGE DETAIL	MEMORY: FBC[63:32]

ALL NVIDIA DESIGN SPECIFICATIONS, REFERENCE SPECIFICATIONS, REFERENCE BOARDS, FILES, DRAWINGS, DIAGNOSTICS, LISTS AND OTHER DOCUMENTS OR INFORMATION (TOGETHER AND SEPARATELY, 'MATERIALS') ARE BEING PROVIDED 'AS IS'. THE MATERIALS MAY CONTAIN KNOWN AND UNKNOWN VIOLATIONS OR DEVIATIONS OF INDUSTRY STANDARDS AND SPECIFICATIONS. NVIDIA MAKES NO WARRANTIES, EXPRESSED, IMPLIED, STATUTORY OR OTHERWISE WITH RESPECT TO THE MATERIALS OR OTHERWISE, AND EXPRESSLY DISCLAIMS ALL IMPLIED WARRANTIES INCLUDING, WITHOUT LIMITATION, THE WARRANTIES OF DESIGN, OF NONINFRINGEMENT, MERCHANTABILITY OR FITNESS FOR A PARTICULAR PURPOSE, OR ARISING FROM A COURSE OF DEALING, TRADE USAGE, TRADE PRACTICE, OR INDUSTRY STANDARDS.

MICRO-STAR INT'L CO.,LTD	
MS-V317	
Size: Custom	Document Description: 11: MEMORY: FBC Partition 63..32
Rev: 1.0	
Date: Wednesday, August 20, 2014	Sheet 11 of 37

NVIDIA CORPORATION	
2701 SAN TOMAS EXPRESSWAY	
SANTA CLARA, CA 95050, USA	
NV_PN	600-1G401-BASE-QS1
PCB REV	PG401-A02
PAGE	11 OF 37
BOM REV	A
DATE	04-AUG-2014

Page12: MEMORY: FBD Partition 31..0

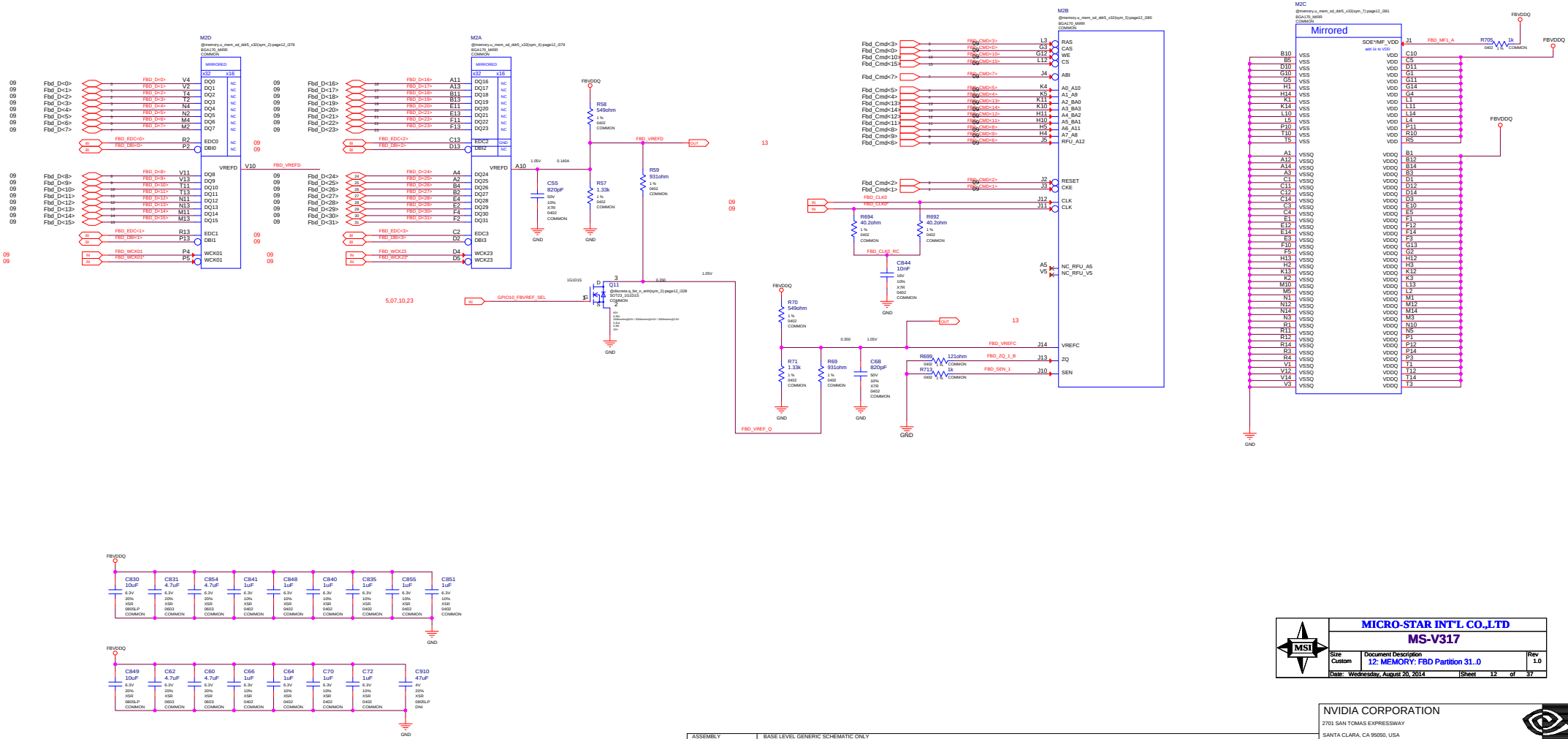

ASSEMBLY	BASE LEVEL GENERIC SCHEMATIC ONLY
PAGE DETAIL	MEMORY: FBD[31:0]

ALL NVIDIA DESIGN SPECIFICATIONS, REFERENCE SPECIFICATIONS, REFERENCE BOARDS, FILES, DRAWINGS, DIAGNOSTICS, LISTS AND OTHER DOCUMENTS OR INFORMATION (TOGETHER AND SEPARATELY, 'MATERIALS') ARE BEING PROVIDED 'AS IS'. THE MATERIALS MAY CONTAIN KNOWN AND UNKNOWN VIOLATIONS OR DEVIATIONS OF INDUSTRY STANDARDS AND SPECIFICATIONS. NVIDIA MAKES NO WARRANTIES, EXPRESSED, IMPLIED, STATUTORY OR OTHERWISE WITH RESPECT TO THE MATERIALS OR OTHERWISE, AND EXPRESSLY DISCLAIMS ALL IMPLIED WARRANTIES INCLUDING, WITHOUT LIMITATION, THE WARRANTIES OF DESIGN, OF NONINFRINGEMENT, MERCHANTABILITY OR FITNESS FOR A PARTICULAR PURPOSE, OR ARISING FROM A COURSE OF DEALING, TRADE USAGE, TRADE PRACTICE, OR INDUSTRY STANDARDS.

MICRO-STAR INT'L CO.,LTD

MS-V317

Size	Document Description	Rev
Custom	12: MEMORY: FBD Partition 31..0	1.0

Date: Wednesday, August 20, 2014 | Sheet 12 of 37

NVIDIA CORPORATION
2701 SAN TOMAS EXPRESSWAY
SANTA CLARA, CA 95050, USA

NV_PN	600-1G401-BASE-QS1		
PCB REV	PG401-A02	PAGE	12 OF 37
BOM REV	A	DATE	04-AUG-2014

Page13: MEMORY: FBD Partition 63..32

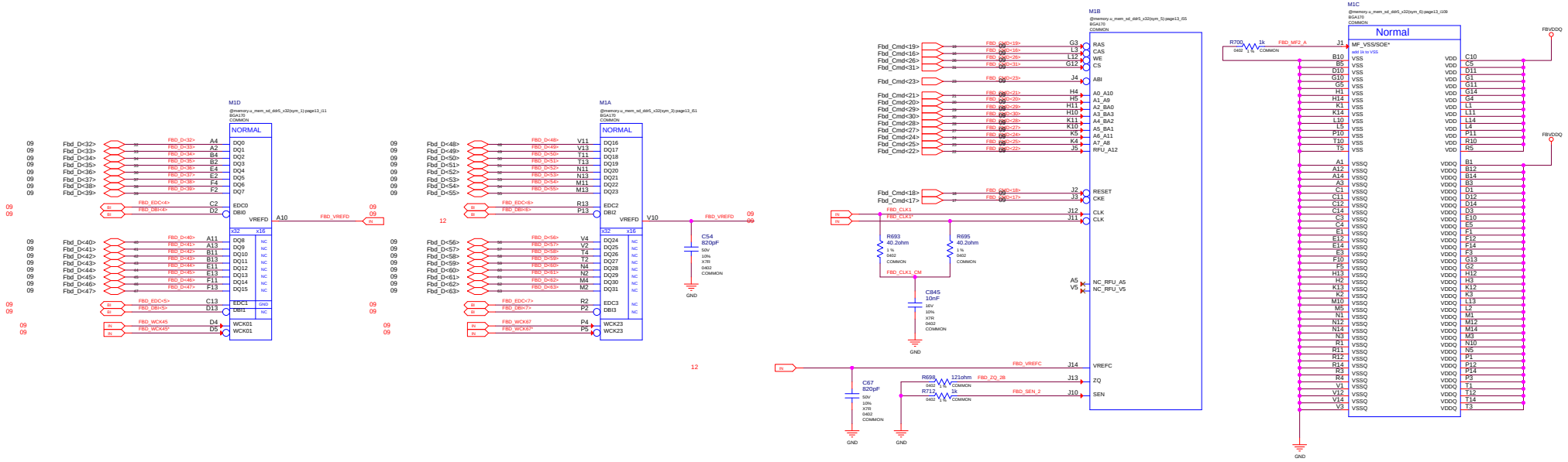

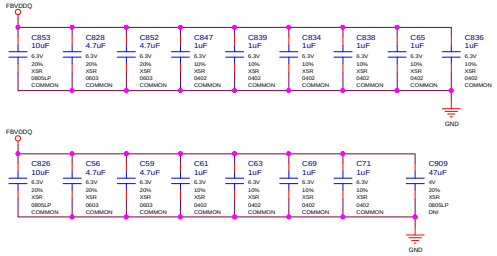

ASSEMBLY	BASE LEVEL GENERIC SCHEMATIC ONLY
PAGE DETAIL	MEMORY: FBD[63:32]

ALL NVIDIA DESIGN SPECIFICATIONS, REFERENCE SPECIFICATIONS, REFERENCE BOARDS, FILES, DRAWINGS, DIAGNOSTICS, LISTS AND OTHER DOCUMENTS OR INFORMATION (TOGETHER AND SEPARATELY, 'MATERIALS') ARE BEING PROVIDED 'AS IS'. THE MATERIALS MAY CONTAIN KNOWN AND UNKNOWN VIOLATIONS OR DEVIATIONS OF INDUSTRY STANDARDS AND SPECIFICATIONS. NVIDIA MAKES NO WARRANTIES, EXPRESSED, IMPLIED, STATUTORY OR OTHERWISE WITH RESPECT TO THE MATERIALS OR OTHERWISE, AND EXPRESSLY DISCLAIMS ALL IMPLIED WARRANTIES INCLUDING, WITHOUT LIMITATION, THE WARRANTIES OF DESIGN, OF NONINFRINGEMENT, MERCHANTABILITY OR FITNESS FOR A PARTICULAR PURPOSE, OR ARISING FROM A COURSE OF DEALING, TRADE USAGE, TRADE PRACTICE, OR INDUSTRY STANDARDS.

MICRO-STAR INT'L CO.,LTD

MS-V317

Size	Document Description	Rev
Custom	13. MEMORY: FBD Partition 63..32	1.0

Date: Wednesday, August 20, 2014 | Sheet 13 of 37

NVIDIA CORPORATION
2701 SAN TOMAS EXPRESSWAY
SANTA CLARA, CA 95050, USA

NV_PN	600-1G401-BASE-QS1		
PCB REV	PG401-A02	PAGE	13 OF 37
BOM REV	A	DATE	04-AUG-2014

Page14: GPU PWR and GND

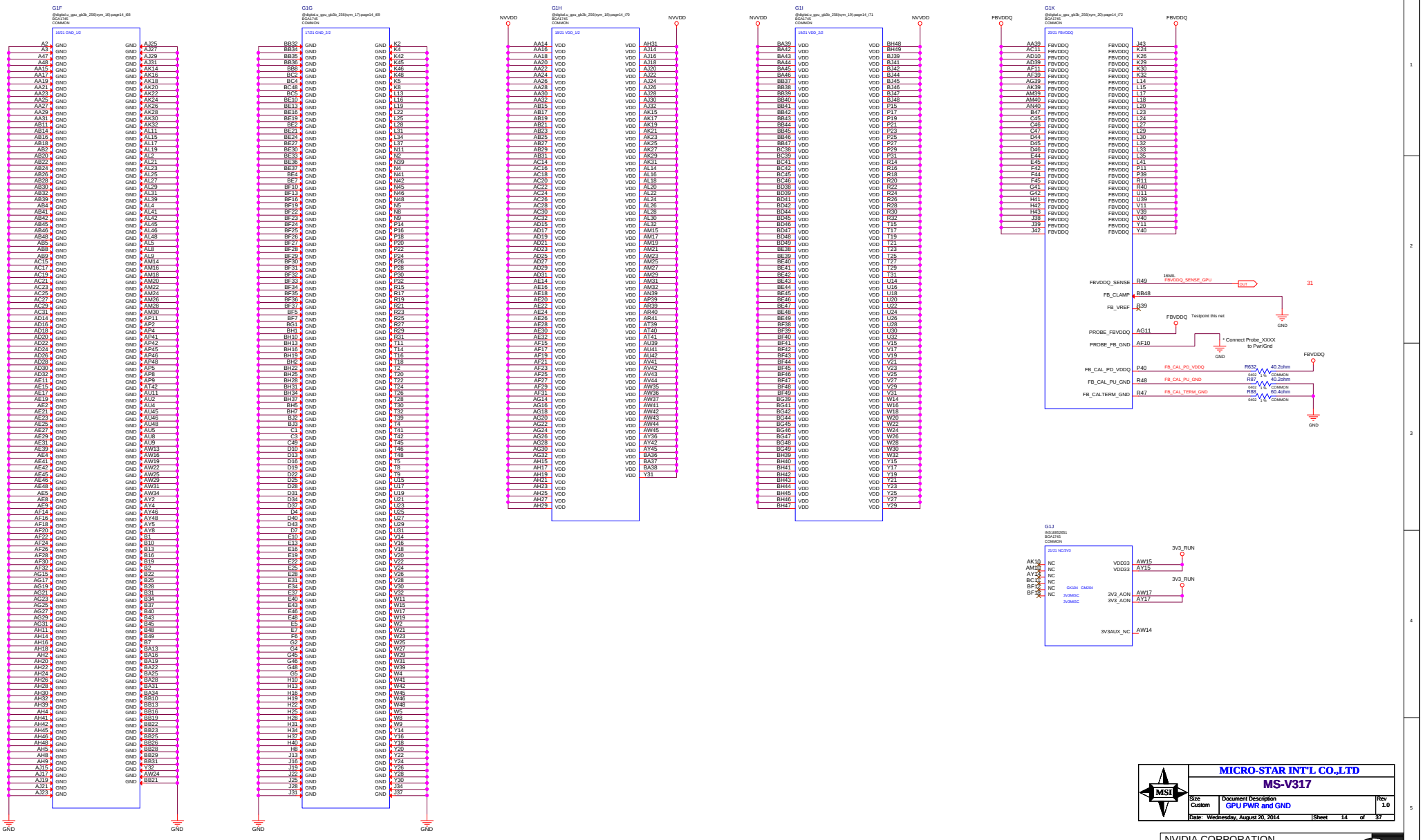

ASSEMBLY	BASE LEVEL GENERIC SCHEMATIC ONLY
PAGE DETAIL	GPU PWR and GND

MICRO-STAR INT'L CO.,LTD

MS-V317

Size	Document Description	Rev
Custom	GPU PWR and GND	1.0

Date: Wednesday, August 20, 2014 Sheet 14 of 37

NVIDIA CORPORATION
2701 SAN TOMAS EXPRESSWAY
SANTA CLARA, CA 95050, USA

NV_PN	600-1G401-BASE-QS1		
PCB REV	PG401-A02	PAGE	14 OF 37
BOM REV	A	DATE	04-AUG-2014

ALL NVIDIA DESIGN SPECIFICATIONS, REFERENCE SPECIFICATIONS, REFERENCE BOARDS, FILES, DRAWINGS, DIAGNOSTICS, LISTS AND OTHER DOCUMENTS OR INFORMATION (TOGETHER AND SEPARATELY, 'MATERIALS') ARE BEING PROVIDED 'AS IS'. THE MATERIALS MAY CONTAIN KNOWN AND UNKNOWN VIOLATIONS OR DEVIATIONS OF INDUSTRY STANDARDS AND SPECIFICATIONS. NVIDIA MAKES NO WARRANTIES, EXPRESSED, IMPLIED, STATUTORY OR OTHERWISE WITH RESPECT TO THE MATERIALS OR OTHERWISE, AND EXPRESSLY DISCLAIMS ALL IMPLIED WARRANTIES INCLUDING, WITHOUT LIMITATION, THE WARRANTIES OF DESIGN, OF NONINFRINGEMENT, MERCHANTABILITY OR FITNESS FOR A PARTICULAR PURPOSE, OR ARISING FROM A COURSE OF DEALING, TRADE USAGE, TRADE PRACTICE, OR INDUSTRY STANDARDS.

Page15: GPU Decoupling

Based on GB2-X GDDR5 FBVDDQ Decap Guideline

FBVDDQ

0.1uF, 0.47uF & 1uF, 0402 (Place Under GPU)

4.7uF, 0603 (Place Near GPU)

10uF, 0805 (Place Near GPU)

22uF, 0805 (Place Near GPU)

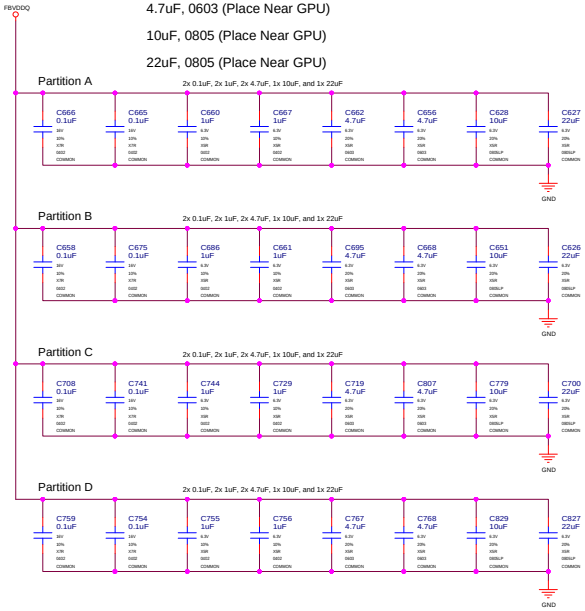

VDD33

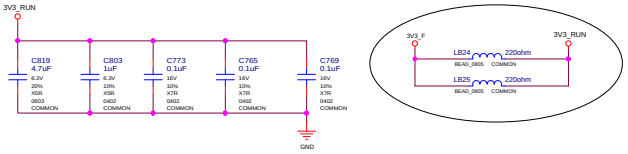

3V3_AON

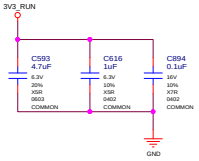

NVVDD Decoupling caps. Place under GPU.

NVVDD

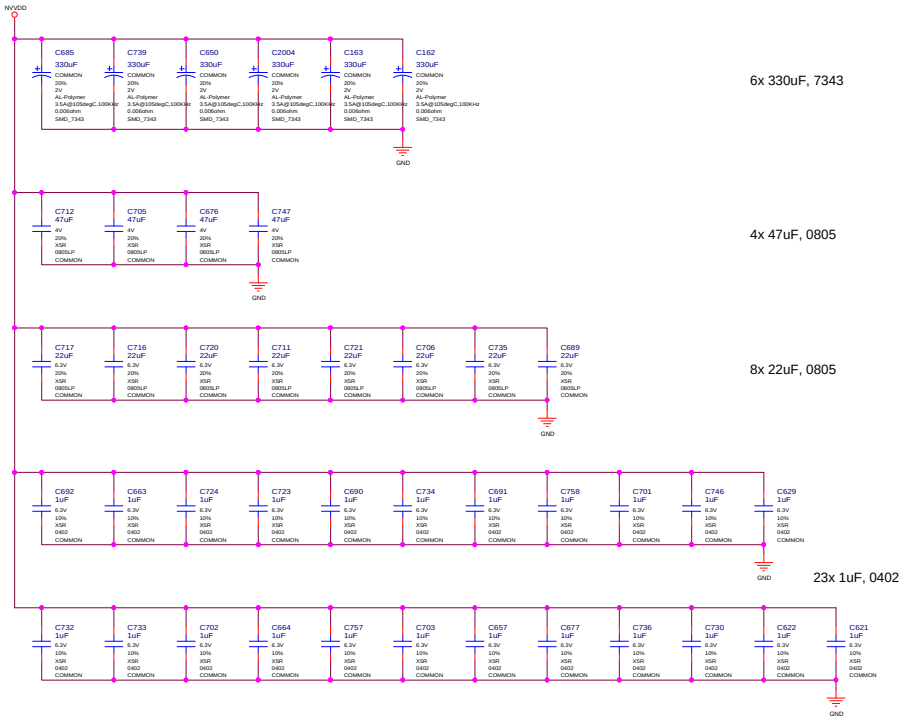

MICRO-STAR INT'L CO.,LTD	
MS-V317	
Size: Custom	Document Description: GPU Decoupling
Rev: 1.0	
Date: Wednesday, August 20, 2014	Sheet 15 of 37

ASSEMBLY	BASE LEVEL GENERIC SCHEMATIC ONLY
PAGE DETAIL	GPU Decoupling

ALL NVIDIA DESIGN SPECIFICATIONS, REFERENCE SPECIFICATIONS, REFERENCE BOARDS, FILES, DRAWINGS, DIAGNOSTICS, LISTS AND OTHER DOCUMENTS OR INFORMATION (TOGETHER AND SEPARATELY, 'MATERIALS') ARE BEING PROVIDED 'AS IS'. THE MATERIALS MAY CONTAIN KNOWN AND UNKNOWN VIOLATIONS OR DEVIATIONS OF INDUSTRY STANDARDS AND SPECIFICATIONS. NVIDIA MAKES NO WARRANTIES, EXPRESSED, IMPLIED, STATUTORY OR OTHERWISE WITH RESPECT TO THE MATERIALS OR OTHERWISE, AND EXPRESSLY DISCLAIMS ALL IMPLIED WARRANTIES INCLUDING, WITHOUT LIMITATION, THE WARRANTIES OF DESIGN, OF NONINFRINGEMENT, MERCHANTABILITY OR FITNESS FOR A PARTICULAR PURPOSE, OR ARISING FROM A COURSE OF DEALING, TRADE USAGE, TRADE PRACTICE, OR INDUSTRY STANDARDS.

NVIDIA CORPORATION
2701 SAN TOMAS EXPRESSWAY
SANTA CLARA, CA 95050, USA

NV_PN	600-1G401-BASE-QS1		
PCB REV	PG401-A02	PAGE	15 OF 37
BOM REV	A	DATE	04-AUG-2014

Page16: DACA Interface

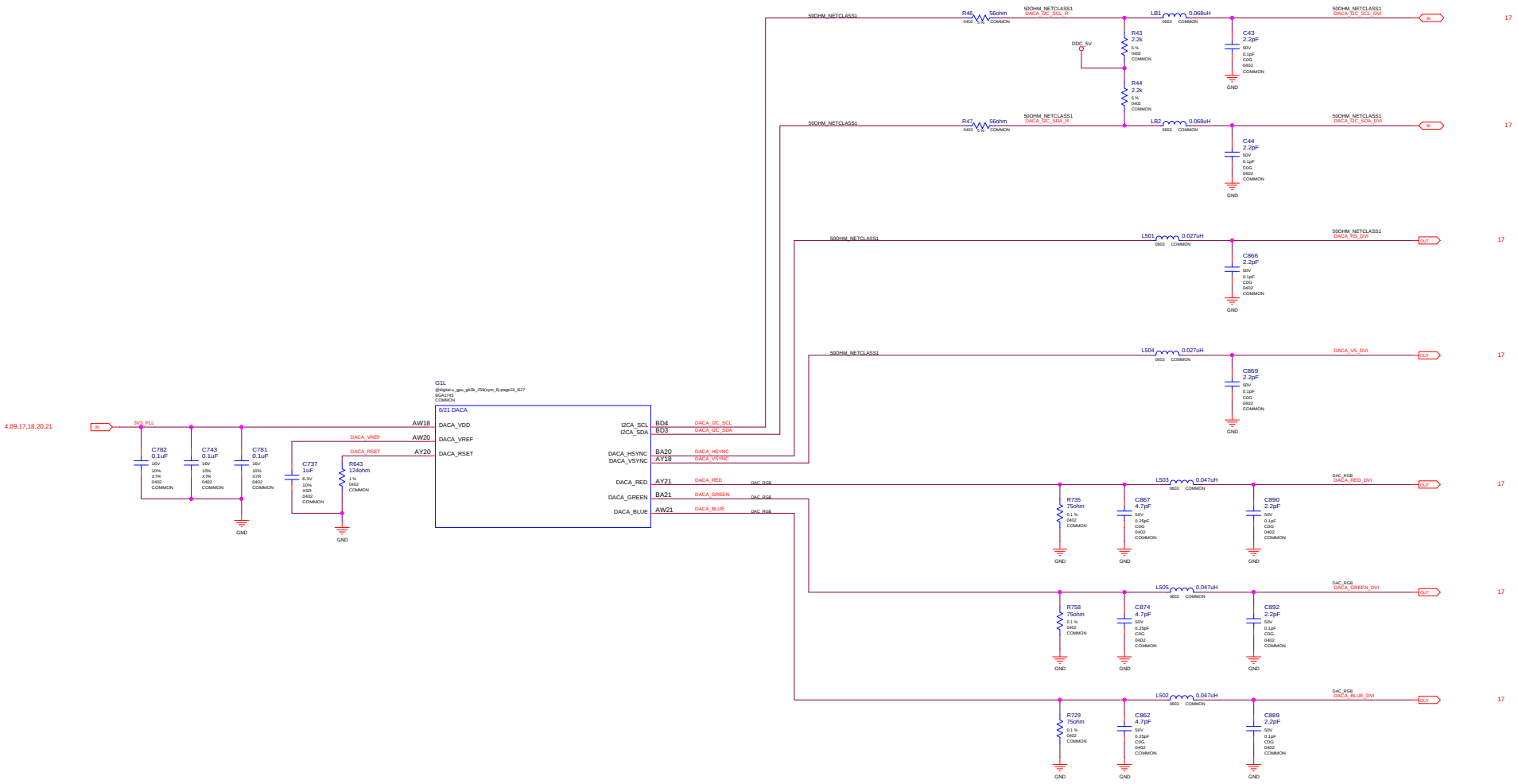

ASSEMBLY	BASE LEVEL GENERIC SCHEMATIC ONLY
PAGE DETAIL	DACA Interface

ALL NVIDIA DESIGN SPECIFICATIONS, REFERENCE SPECIFICATIONS, REFERENCE BOARDS, FILES, DRAWINGS, DIAGNOSTICS, LISTS AND OTHER DOCUMENTS OR INFORMATION (TOGETHER AND SEPARATELY, 'MATERIALS') ARE BEING PROVIDED 'AS IS'. THE MATERIALS MAY CONTAIN KNOWN AND UNKNOWN VIOLATIONS OR DEVIATIONS OF INDUSTRY STANDARDS AND SPECIFICATIONS. NVIDIA MAKES NO WARRANTIES, EXPRESSED, IMPLIED, STATUTORY OR OTHERWISE WITH RESPECT TO THE MATERIALS OR OTHERWISE, AND EXPRESSLY DISCLAIMS ALL IMPLIED WARRANTIES INCLUDING, WITHOUT LIMITATION, THE WARRANTIES OF DESIGN, OF NONINFRINGEMENT, MERCHANTABILITY OR FITNESS FOR A PARTICULAR PURPOSE, OR ARISING FROM A COURSE OF DEALING, TRADE USAGE, TRADE PRACTICE, OR INDUSTRY STANDARDS.

MICRO-STAR INT'L CO.,LTD

MS-V317

Size	Document Description	Rev
Custom	DACA Interface	1.0

Date: Wednesday, August 20, 2014 Sheet 16 of 37

NVIDIA CORPORATION
2701 SAN TOMAS EXPRESSWAY
SANTA CLARA, CA 95050, USA

NV_PN	600-1G401-BASE-QS1		
PCB REV	PG401-A02	PAGE	16 OF 37
BOM REV	A	DATE	04-AUG-2014

Page17: IFPAB DVI-I-DL

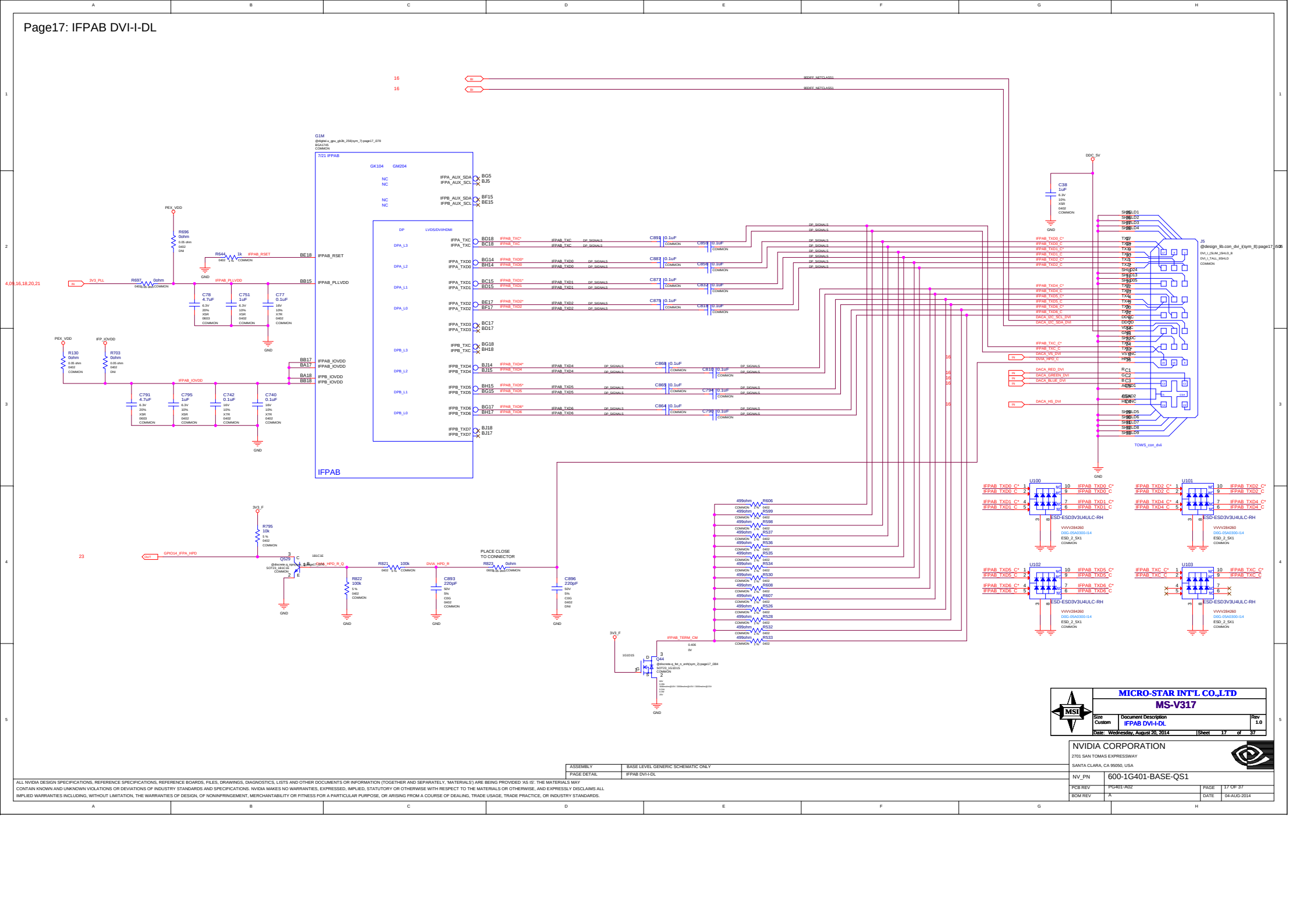

ASSEMBLY	BASE LEVEL GENERIC SCHEMATIC ONLY
PAGE DETAIL	IFPAB DVI-I-DL

ALL NVIDIA DESIGN SPECIFICATIONS, REFERENCE SPECIFICATIONS, REFERENCE BOARDS, FILES, DRAWINGS, DIAGNOSTICS, LISTS AND OTHER DOCUMENTS OR INFORMATION (TOGETHER AND SEPARATELY, 'MATERIALS') ARE BEING PROVIDED 'AS IS'. THE MATERIALS MAY CONTAIN KNOWN AND UNKNOWN VIOLATIONS OR DEVIATIONS OF INDUSTRY STANDARDS AND SPECIFICATIONS. NVIDIA MAKES NO WARRANTIES, EXPRESSED, IMPLIED, STATUTORY OR OTHERWISE WITH RESPECT TO THE MATERIALS OR OTHERWISE, AND EXPRESSLY DISCLAIMS ALL IMPLIED WARRANTIES INCLUDING, WITHOUT LIMITATION, THE WARRANTIES OF DESIGN, OF NONINFRINGEMENT, MERCHANTABILITY OR FITNESS FOR A PARTICULAR PURPOSE, OR ARISING FROM A COURSE OF DEALING, TRADE USAGE, TRADE PRACTICE, OR INDUSTRY STANDARDS.

MICRO-STAR INT'L CO.,LTD

MS-V317

Size	Document Description	Rev
Custom	IFPAB DVI-I-DL	1.0
Date: Wednesday, August 20, 2014	Sheet 17 of 37	

NVIDIA CORPORATION
2701 SAN TOMAS EXPRESSWAY
SANTA CLARA, CA 95050, USA

NV_PN	600-1G401-BASE-QS1		
PCB REV	PG401-A02	PAGE	17 OF 37
BOM REV	A	DATE	04-AUG-2014

Page18: IFPEF with IFPE DP

Two cases to be considered:

1. DP AUX to DP connector: AUX AC coupled
2. DP AUX to DP-DVI dongle: AUX pass through

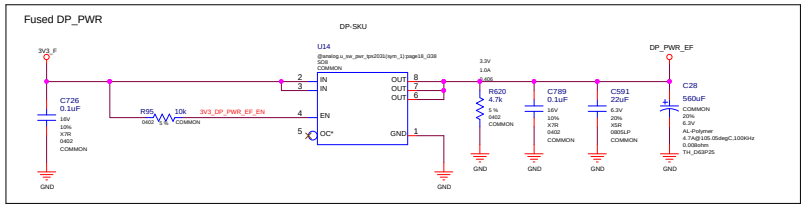

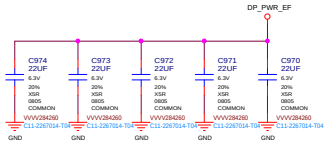

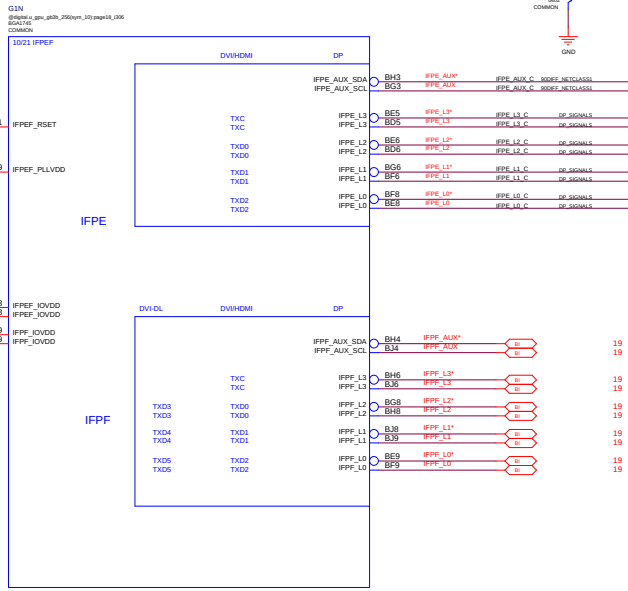

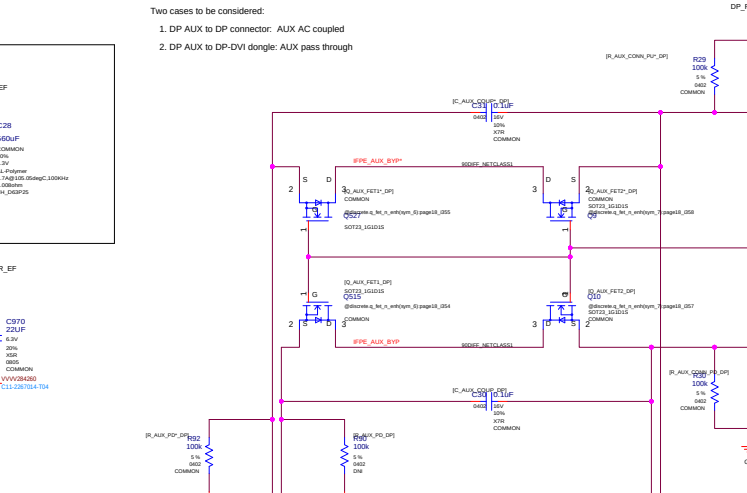

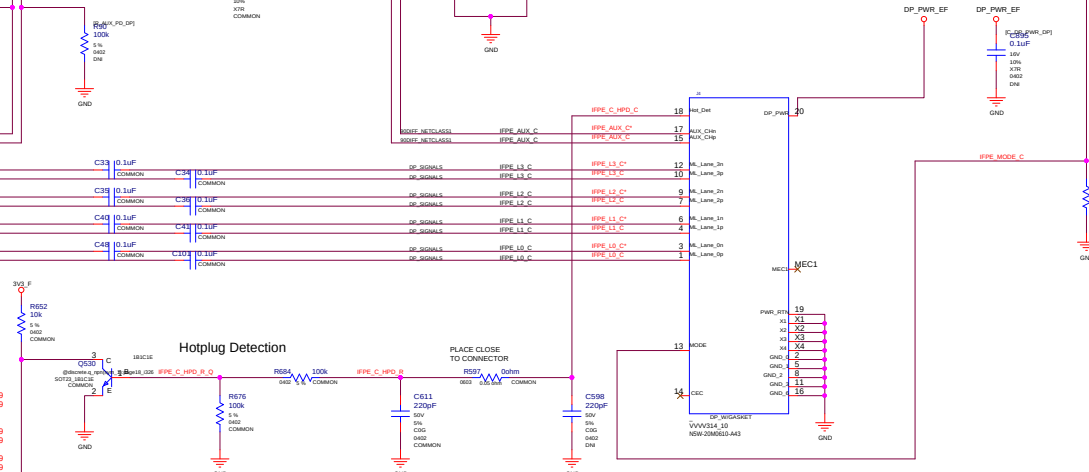

ASSEMBLY	BASE LEVEL GENERIC SCHEMATIC ONLY
PAGE DETAIL	IFPEF with IFPE DP

ALL NVIDIA DESIGN SPECIFICATIONS, REFERENCE SPECIFICATIONS, REFERENCE BOARDS, FILES, DRAWINGS, DIAGNOSTICS, LISTS AND OTHER DOCUMENTS OR INFORMATION (TOGETHER AND SEPARATELY, 'MATERIALS') ARE BEING PROVIDED 'AS IS'. THE MATERIALS MAY CONTAIN KNOWN AND UNKNOWN VIOLATIONS OR DEVIATIONS OF INDUSTRY STANDARDS AND SPECIFICATIONS. NVIDIA MAKES NO WARRANTIES, EXPRESSED, IMPLIED, STATUTORY OR OTHERWISE WITH RESPECT TO THE MATERIALS OR OTHERWISE, AND EXPRESSLY DISCLAIMS ALL IMPLIED WARRANTIES INCLUDING, WITHOUT LIMITATION, THE WARRANTIES OF DESIGN, OF NONINFRINGEMENT, MERCHANTABILITY OR FITNESS FOR A PARTICULAR PURPOSE, OR ARISING FROM A COURSE OF DEALING, TRADE USAGE, TRADE PRACTICE, OR INDUSTRY STANDARDS.

MICRO-STAR INT'L CO.,LTD

MS-V317

Size	Document Description	Rev
Custom	IFPEF with IFPE DP	1.0

Date: Wednesday, August 20, 2014 Sheet 18 of 37

NVIDIA CORPORATION
2701 SAN TOMAS EXPRESSWAY
SANTA CLARA, CA 95050, USA

NV_PN	600-1G401-BASE-QS1		
PCB REV	PG401-A02	PAGE	18 OF 37
BOM REV	A	DATE	04-AUG-2014

Page19: IFPF DP

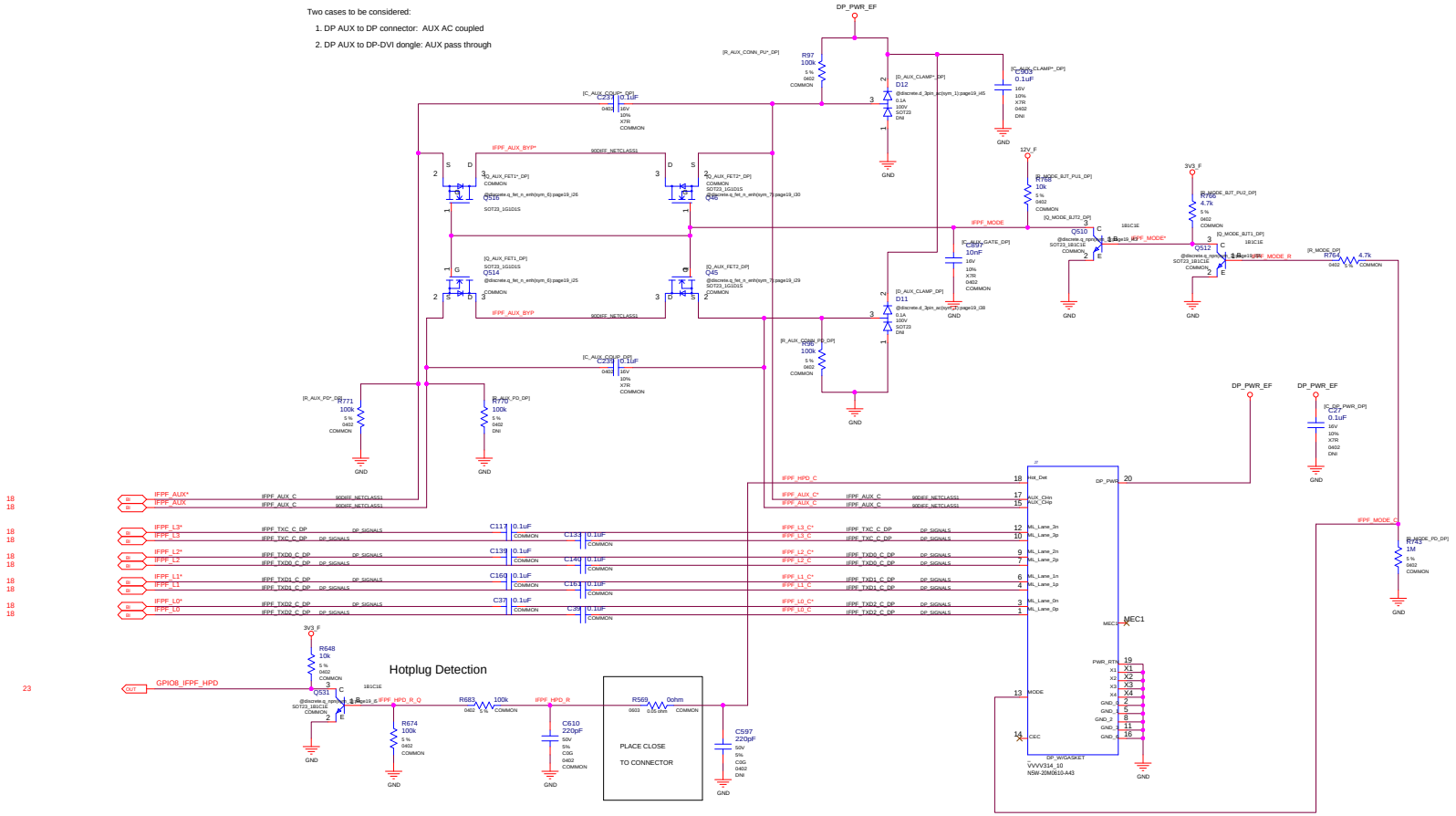

ASSEMBLY	BASE LEVEL GENERIC SCHEMATIC ONLY
PAGE DETAIL	IFPF DP

ALL NVIDIA DESIGN SPECIFICATIONS, REFERENCE SPECIFICATIONS, REFERENCE BOARDS, FILES, DRAWINGS, DIAGNOSTICS, LISTS AND OTHER DOCUMENTS OR INFORMATION (TOGETHER AND SEPARATELY, 'MATERIALS') ARE BEING PROVIDED 'AS IS'. THE MATERIALS MAY CONTAIN KNOWN AND UNKNOWN VIOLATIONS OR DEVIATIONS OF INDUSTRY STANDARDS AND SPECIFICATIONS. NVIDIA MAKES NO WARRANTIES, EXPRESSED, IMPLIED, STATUTORY OR OTHERWISE WITH RESPECT TO THE MATERIALS OR OTHERWISE, AND EXPRESSLY DISCLAIMS ALL IMPLIED WARRANTIES INCLUDING, WITHOUT LIMITATION, THE WARRANTIES OF DESIGN, OF NONINFRINGEMENT, MERCHANTABILITY OR FITNESS FOR A PARTICULAR PURPOSE, OR ARISING FROM A COURSE OF DEALING, TRADE USAGE, TRADE PRACTICE, OR INDUSTRY STANDARDS.

MICRO-STAR INT'L CO.,LTD

MS-V317

Size	Document Description	Rev
Custom	IFPF DP	1.0

Date: Wednesday, August 20, 2014 | Sheet 19 of 37

NVIDIA CORPORATION
2701 SAN TOMAS EXPRESSWAY
SANTA CLARA, CA 95050, USA

NV_PN	600-1G401-BASE-QS1		
PCB REV	PG401-A02	PAGE	19 OF 37
BOM REV	A	DATE	04-AUG-2014

Page20: IFPC HDMI

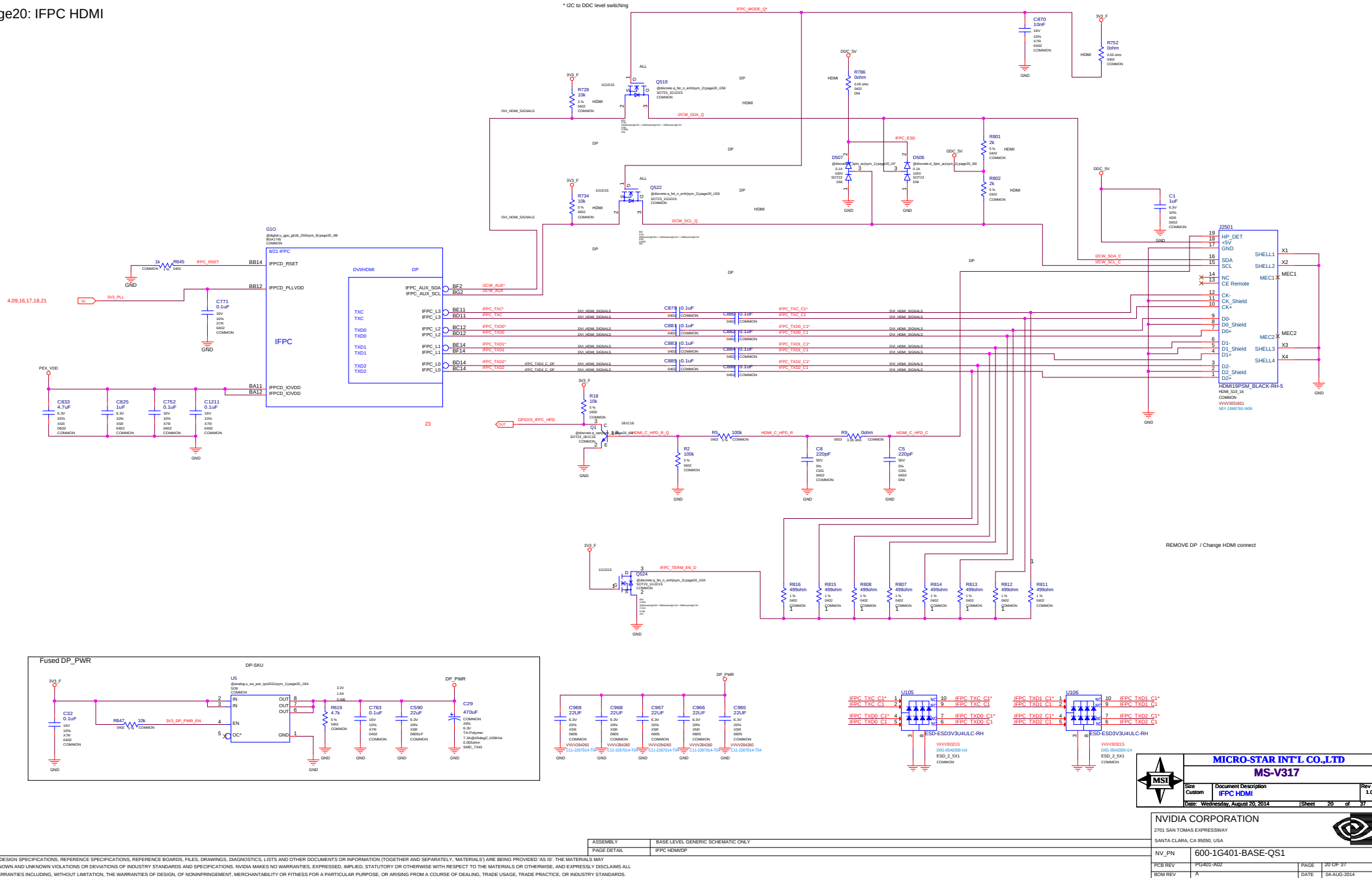

ASSEMBLY	BASE LEVEL GENERIC SCHEMATIC ONLY
PAGE DETAIL	IFPC HDMI/DP

ALL NVIDIA DESIGN SPECIFICATIONS, REFERENCE SPECIFICATIONS, REFERENCE BOARDS, FILES, DRAWINGS, DIAGNOSTICS, LISTS AND OTHER DOCUMENTS OR INFORMATION (TOGETHER AND SEPARATELY, 'MATERIALS') ARE BEING PROVIDED 'AS IS'. THE MATERIALS MAY CONTAIN KNOWN AND UNKNOWN VIOLATIONS OR DEVIATIONS OF INDUSTRY STANDARDS AND SPECIFICATIONS. NVIDIA MAKES NO WARRANTIES, EXPRESSED, IMPLIED, STATUTORY OR OTHERWISE WITH RESPECT TO THE MATERIALS OR OTHERWISE, AND EXPRESSLY DISCLAIMS ALL IMPLIED WARRANTIES INCLUDING, WITHOUT LIMITATION, THE WARRANTIES OF DESIGN, OF NONINFRINGEMENT, MERCHANTABILITY OR FITNESS FOR A PARTICULAR PURPOSE, OR ARISING FROM A COURSE OF DEALING, TRADE USAGE, TRADE PRACTICE, OR INDUSTRY STANDARDS.

Size	Custom
Document Description	IFPC HDMI
Rev	1.0
Date	Wednesday, August 20, 2014
Sheet	20 of 37

NV_PN	600-1G401-BASE-QS1
PCB REV	PG401-A02
PAGE	20 OF 37
BOM REV	A
DATE	04-AUG-2014

Page21: IFPD DP

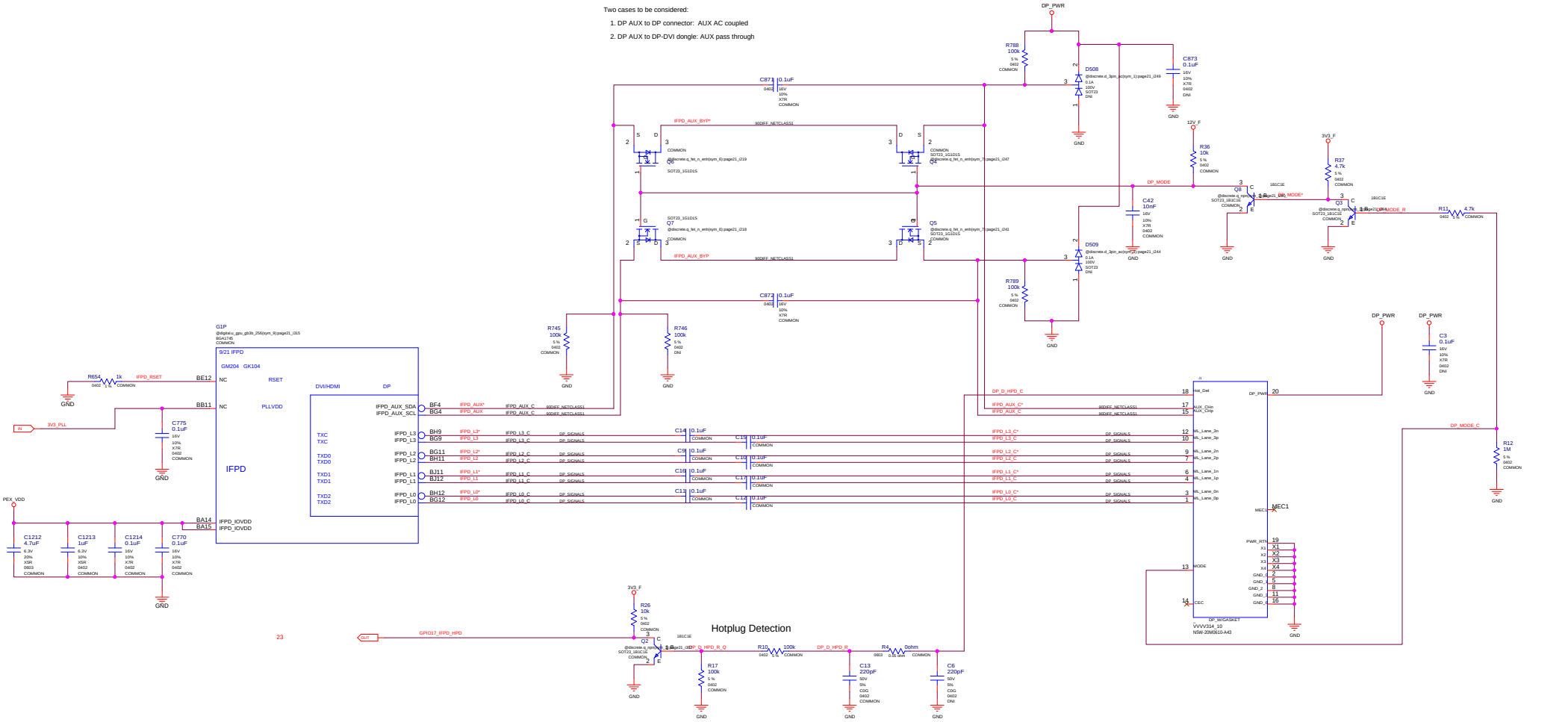

ASSEMBLY	BASE LEVEL GENERIC SCHEMATIC ONLY
PAGE DETAIL	IFPD DP

ALL NVIDIA DESIGN SPECIFICATIONS, REFERENCE SPECIFICATIONS, REFERENCE BOARDS, FILES, DRAWINGS, DIAGNOSTICS, LISTS AND OTHER DOCUMENTS OR INFORMATION (TOGETHER AND SEPARATELY, 'MATERIALS') ARE BEING PROVIDED 'AS IS'. THE MATERIALS MAY CONTAIN KNOWN AND UNKNOWN VIOLATIONS OR DEVIATIONS OF INDUSTRY STANDARDS AND SPECIFICATIONS. NVIDIA MAKES NO WARRANTIES, EXPRESSED, IMPLIED, STATUTORY OR OTHERWISE WITH RESPECT TO THE MATERIALS OR OTHERWISE, AND EXPRESSLY DISCLAIMS ALL IMPLIED WARRANTIES INCLUDING, WITHOUT LIMITATION, THE WARRANTIES OF DESIGN, OF NONINFRINGEMENT, MERCHANTABILITY OR FITNESS FOR A PARTICULAR PURPOSE, OR ARISING FROM A COURSE OF DEALING, TRADE USAGE, TRADE PRACTICE, OR INDUSTRY STANDARDS.

MICRO-STAR INT'L CO.,LTD

MS-V317

Size	Document Description	Rev
Custom	IFPD DP	1.0

Date: Wednesday, August 20, 2014 Sheet 21 of 37

NVIDIA CORPORATION
2701 SAN TOMAS EXPRESSWAY
SANTA CLARA, CA 95050, USA

NV_PN	600-1G401-BASE-QS1		
PCB REV	PG401-A02	PAGE	21 OF 37
BOM REV	A	DATE	04-AUG-2014

Page22: MIOA/B Interface and FRAME LOCK

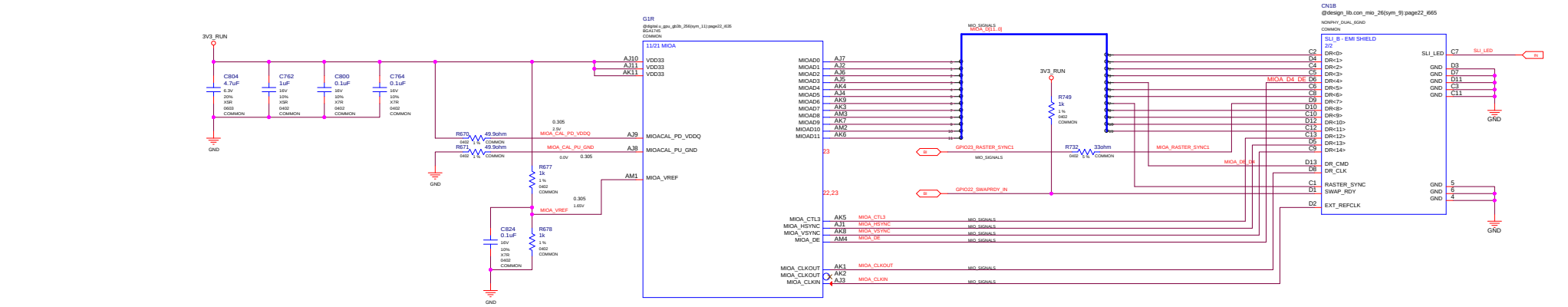

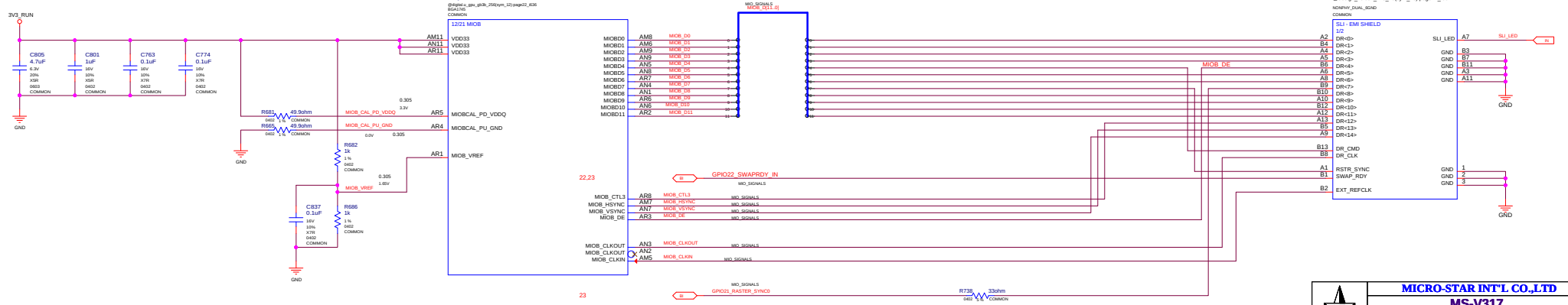

ASSEMBLY	BASE LEVEL GENERIC SCHEMATIC ONLY
PAGE DETAIL	MIOA/B Interface and Frame Lock

ALL NVIDIA DESIGN SPECIFICATIONS, REFERENCE SPECIFICATIONS, REFERENCE BOARDS, FILES, DRAWINGS, DIAGNOSTICS, LISTS AND OTHER DOCUMENTS OR INFORMATION (TOGETHER AND SEPARATELY, 'MATERIALS') ARE BEING PROVIDED 'AS IS'. THE MATERIALS MAY CONTAIN KNOWN AND UNKNOWN VIOLATIONS OR DEVIATIONS OF INDUSTRY STANDARDS AND SPECIFICATIONS. NVIDIA MAKES NO WARRANTIES, EXPRESSED, IMPLIED, STATUTORY OR OTHERWISE WITH RESPECT TO THE MATERIALS OR OTHERWISE, AND EXPRESSLY DISCLAIMS ALL IMPLIED WARRANTIES INCLUDING, WITHOUT LIMITATION, THE WARRANTIES OF DESIGN, OF NONINFRINGEMENT, MERCHANTABILITY OR FITNESS FOR A PARTICULAR PURPOSE, OR ARISING FROM A COURSE OF DEALING, TRADE USAGE, TRADE PRACTICE, OR INDUSTRY STANDARDS.

MICRO-STAR INT'L CO.,LTD

MS-V317

Size	Document Description	Rev
Custom	MIOA/B Interface and FRAME LOCK	1.0

Date: Wednesday, August 20, 2014 Sheet 22 of 37

NVIDIA CORPORATION

2701 SAN TOMAS EXPRESSWAY

SANTA CLARA, CA 95050, USA

NV_PN	600-1G401-BASE-QS1		
PCB REV	PG401-A02	PAGE	22 OF 37
BOM REV	A	DATE	04-AUG-2014

Page23: MISC1: Fan, Thermal, JTAG, GPIO, STEREO

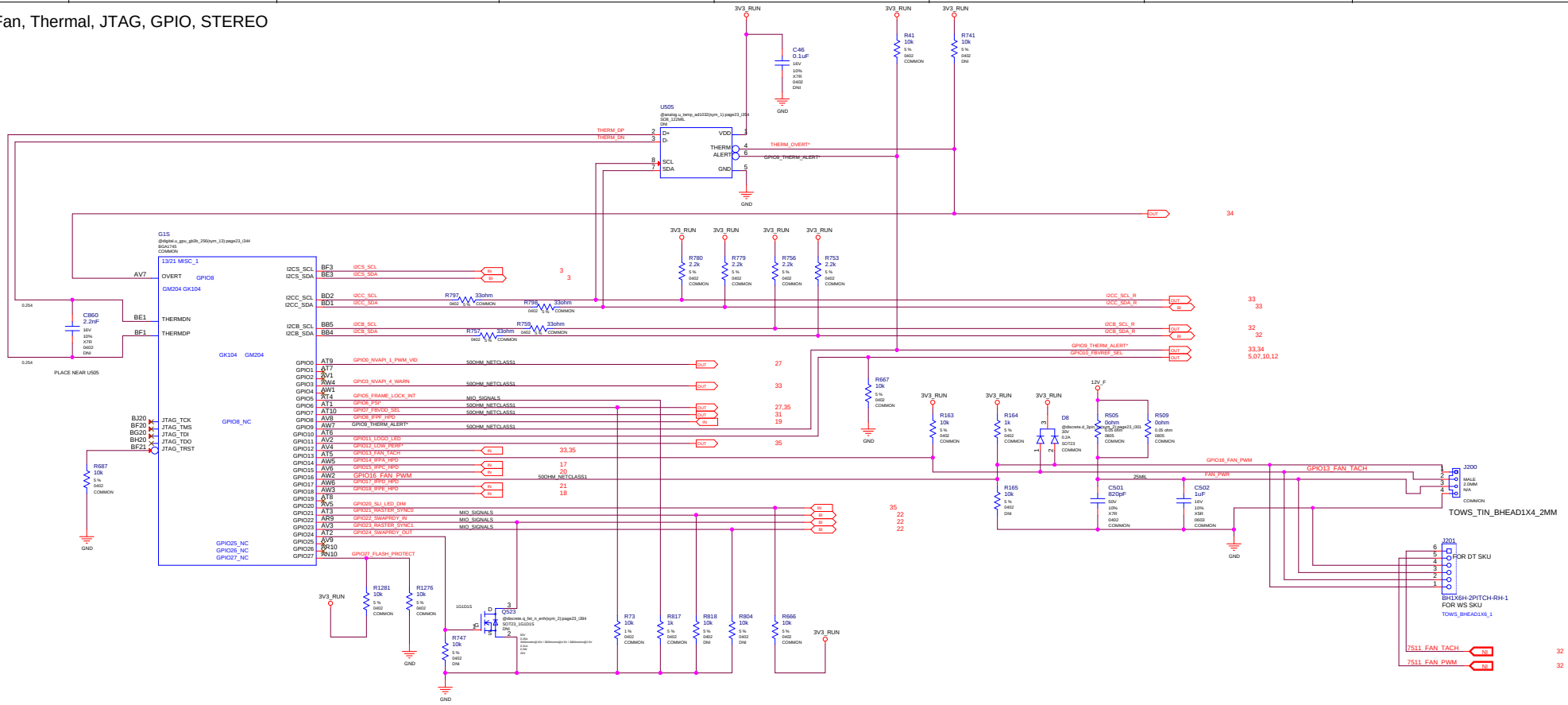

MICRO-STAR INT'L CO.,LTD	
MS-V317	
Size: Custom	Document Description: MISC1: Fan, Thermal, JTAG, GPIO, STEREO
Rev: 1.0	
Date: Wednesday, August 20, 2014	Sheet 23 of 37

ASSEMBLY	BASE LEVEL GENERIC SCHEMATIC ONLY
PAGE DETAIL	MISC1: Fan, Thermal, JTAG, GPIO, Stereo

NVIDIA CORPORATION
2701 SAN TOMAS EXPRESSWAY
SANTA CLARA, CA 95050, USA

NV_PN	600-1G401-BASE-QS1		
PCB REV	PG401-A02	PAGE	23 OF 37
BOM REV	A	DATE	04-AUG-2014

ALL NVIDIA DESIGN SPECIFICATIONS, REFERENCE SPECIFICATIONS, REFERENCE BOARDS, FILES, DRAWINGS, DIAGNOSTICS, LISTS AND OTHER DOCUMENTS OR INFORMATION (TOGETHER AND SEPARATELY, 'MATERIALS') ARE BEING PROVIDED 'AS IS'. THE MATERIALS MAY CONTAIN KNOWN AND UNKNOWN VIOLATIONS OR DEVIATIONS OF INDUSTRY STANDARDS AND SPECIFICATIONS. NVIDIA MAKES NO WARRANTIES, EXPRESSED, IMPLIED, STATUTORY OR OTHERWISE WITH RESPECT TO THE MATERIALS OR OTHERWISE, AND EXPRESSLY DISCLAIMS ALL IMPLIED WARRANTIES INCLUDING, WITHOUT LIMITATION, THE WARRANTIES OF DESIGN, OF NONINFRINGEMENT, MERCHANTABILITY OR FITNESS FOR A PARTICULAR PURPOSE, OR ARISING FROM A COURSE OF DEALING, TRADE USAGE, TRADE PRACTICE, OR INDUSTRY STANDARDS.

Page24: MISC2: ROM, XTAL, Straps

	KEPLER			MAXWELL		
STRAP0	USER_BIT [3:0]*	0000*	5K PD*	GC6	SEE TABLE BELOW	
STRAP1	3GIO_PADCFG_LUT_ADR*	0000*	5K PD Desktop*			
STRAP2	PCI_DEVID [3:0]*	0100 - (0x1184)*	25K PD -425 GPU*			
STRAP3	SOR_EXPOSED [3:0]*	1111*	45K PU*			
STRAP4	DP_PLL_VDD_33V*	1*	FOR 3_3V*			
	PEX_MAX_SPEED*	1*	FOR GEN2/3*			
	PEX_SPD_CHANGE_GEN3*	1*	ENABLED*			
	*					
ROM_SI	RAMCFG[0]*	1*		RAMCFG[0]*	1*	
	RAMCFG[1]*	1*	0111 for 64Mx32 256 bit SAMSUNG SAMSUNG for SKU 0 primary memory	RAMCFG[1]*	1*	20K PD*
	RAMCFG[2]*	1*	45K PD*	RAMCFG[2]*	0*	
	RAMCFG[3]*	0*		RAMCFG[3]*	0*	
ROM_SO	VGA_DEVICE*	1*		VGA_DEVICE*	1*	
	SMB_ALT_ADDR*	0*	30k PD*	SMB_ALT_ADDR*	0*	10K PD*
	FB[0]_APERTURE_SIZE*	1*	For 128MB*	PCIE_CFG*	0*	
	FB[1]_APERTURE_SIZE*	0*	For 128MB*	DEVID_SEL*	0*	
ROM_SCLK	PEX_PLL_EN_TERM100*	0*	DISABLED*	SOR0_EXPOSED*	1*	
	PCI_DEVID_EXT[5]*	0*	For 0x1184*	SOR1_EXPOSED*	1*	45K PU*
	SUB_VENDOR*	1*	Dedicated BIOS*	SOR2_EXPOSED*	1*	
	PCI_DEVID_EXT[4]*	0*	For 0x1184*	SOR3_EXPOSED*	1*	

0x13C0

MULTI_STRAP_REF0_GND

BINARY PRODUCTION	NC
BINARY BRINGUP	NC
MULTI-LEVEL	40.2k 1% TO GND

MAXWELL

STRAP0

3.3V	1.65V	0V
GC6+ ISLAND ENABLED	GC6+ DEBUG MODE	GC6+ ISLAND DISABLED

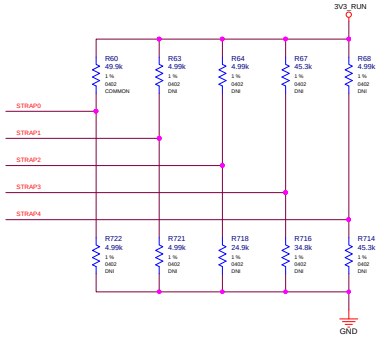

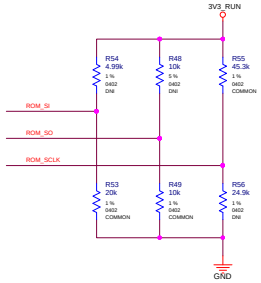

	GND	3V3
5k	0000	1000
10k	0001	1001
15k	0010	1010
20k	0011	1011
25k	0100	1100
30k	0101	1101
35k	0110	1110
45k	0111	1111

KEPLER

CFG[3:0] Config Width	Vendor
0000	Reserved
0001	32Mx32 256-bit Elpida
0010	32Mx32 256-bit Hynix
0011	32Mx32 256-bit Samsung
0100	Reserved
0101	64Mx32 256-bit Elpida
0110	64Mx32 256-bit Hynix
0111	64Mx32 256-bit Samsung
1000	Reserved
1001	32Mx32 192-bit Elpida
1010	32Mx32 192-bit Hynix
1011	32Mx32 192-bit Samsung
1100	Reserved
1101	64Mx32 192-bit Elpida
1110	64Mx32 192-bit Hynix
1111	64Mx32 192-bit Samsung

MAXWELL

CFG[3:0] Config Width	Vendor
0000	Reserved
0001	128Mx32 256-bit Elpida
0010	128Mx32 256-bit Hynix
0011	128Mx32 256-bit Samsung
0100	Reserved
0101	64Mx32 256-bit Elpida
0110	64Mx32 256-bit Hynix
0111	64Mx32 256-bit Samsung

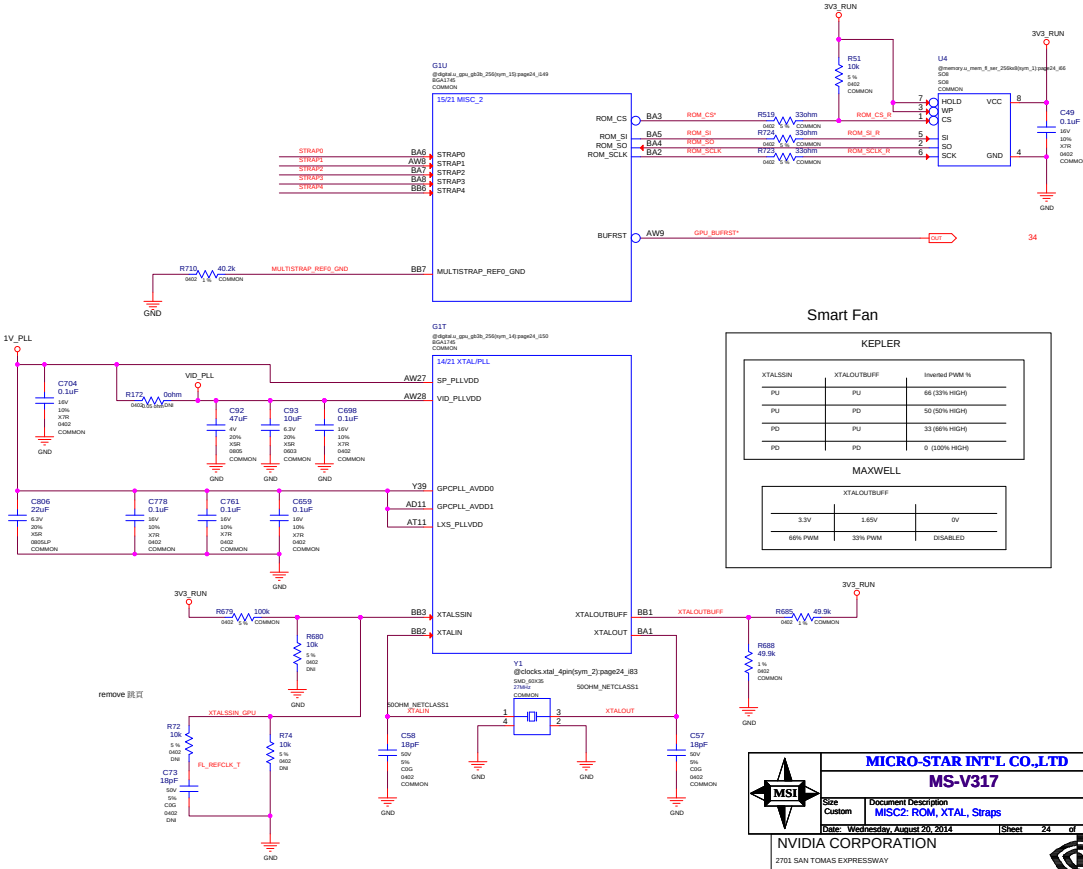

Smart Fan

KEPLER

XTALSSIN	XTALOUTBUFF	Inverted PWM %
PU	PU	66 (33% HIGH)
PU	PD	50 (50% HIGH)
PD	PU	33 (66% HIGH)
PD	PD	0 (100% HIGH)

MAXWELL

XTALOUTBUFF

3.3V	1.65V	0V
66% PWM	33% PWM	DISABLED

ASSEMBLY	BASE LEVEL GENERIC SCHEMATIC ONLY
PAGE DETAIL	MISC2: ROM, XTAL, Straps

ALL NVIDIA DESIGN SPECIFICATIONS, REFERENCE SPECIFICATIONS, REFERENCE BOARDS, FILES, DRAWINGS, DIAGNOSTICS, LISTS AND OTHER DOCUMENTS OR INFORMATION (TOGETHER AND SEPARATELY, 'MATERIALS') ARE BEING PROVIDED 'AS IS'. THE MATERIALS MAY CONTAIN KNOWN AND UNKNOWN VIOLATIONS OR DEVIATIONS OF INDUSTRY STANDARDS AND SPECIFICATIONS. NVIDIA MAKES NO WARRANTIES, EXPRESSED, IMPLIED, STATUTORY OR OTHERWISE WITH RESPECT TO THE MATERIALS OR OTHERWISE, AND EXPRESSLY DISCLAIMS ALL IMPLIED WARRANTIES INCLUDING, WITHOUT LIMITATION, THE WARRANTIES OF DESIGN, OF NONINFRINGEMENT, MERCHANTABILITY OR FITNESS FOR A PARTICULAR PURPOSE, OR ARISING FROM A COURSE OF DEALING, TRADE USAGE, TRADE PRACTICE, OR INDUSTRY STANDARDS.

MICRO-STAR INT'L CO.,LTD

MS-V317

Size	Document Description	Rev
Custom	MISC2: ROM, XTAL, Straps	1.0

Date: Wednesday, August 20, 2014 Sheet 24 of 37

NVIDIA CORPORATION
2701 SAN TOMAS EXPRESSWAY
SANTA CLARA, CA 95050, USA

NV_PN	600-1G401-BASE-QS1		
PCB REV	PG401-A02	PAGE	24 OF 37
BOM REV	A	DATE	04-AUG-2014

Page25: PS: 5V, PEX_VDD

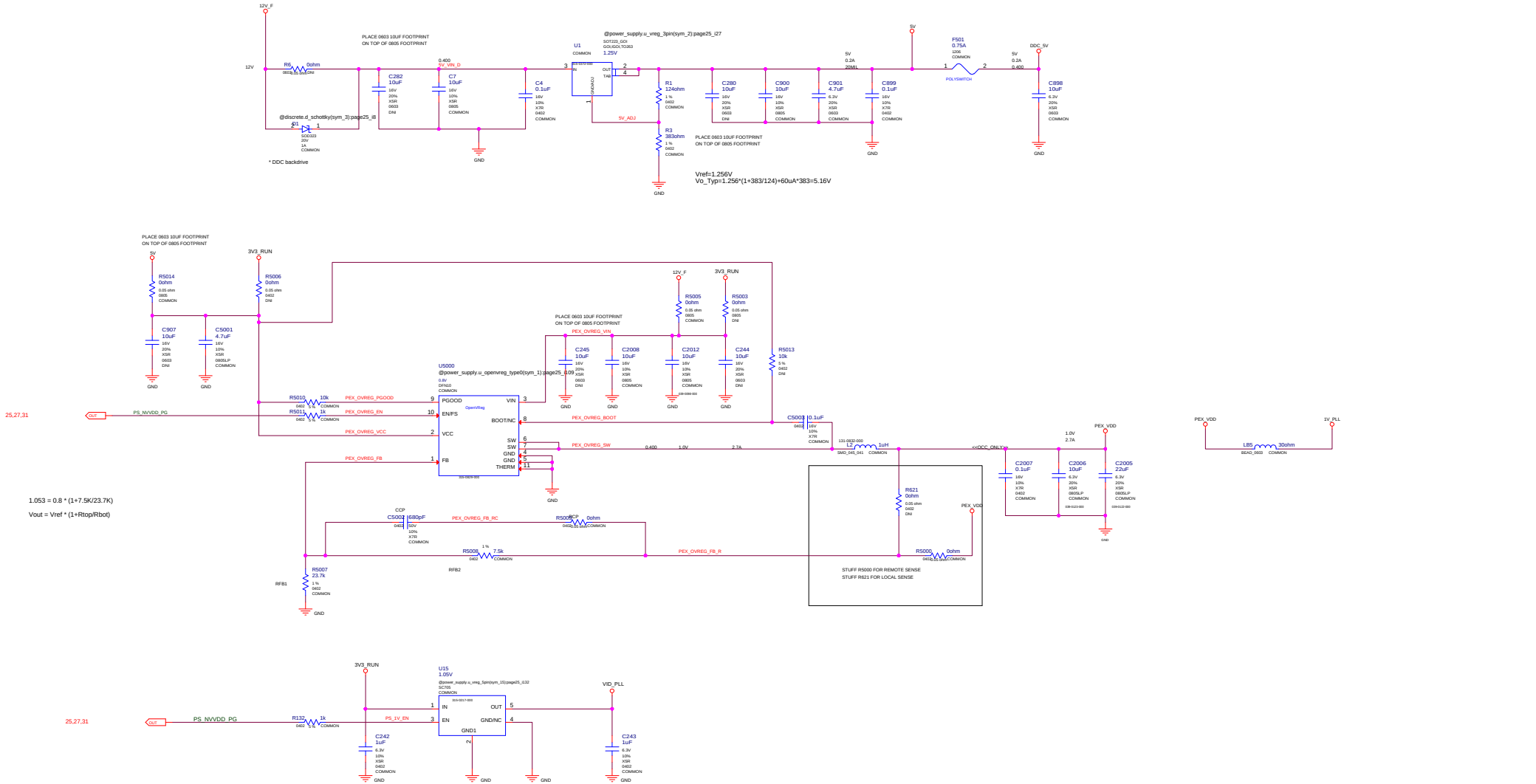

ASSEMBLY	BASE LEVEL GENERIC SCHEMATIC ONLY
PAGE DETAIL	PS: 5V, PEX_VDD

ALL NVIDIA DESIGN SPECIFICATIONS, REFERENCE SPECIFICATIONS, REFERENCE BOARDS, FILES, DRAWINGS, DIAGNOSTICS, LISTS AND OTHER DOCUMENTS OR INFORMATION (TOGETHER AND SEPARATELY, 'MATERIALS') ARE BEING PROVIDED 'AS IS'. THE MATERIALS MAY CONTAIN KNOWN AND UNKNOWN VIOLATIONS OR DEVIATIONS OF INDUSTRY STANDARDS AND SPECIFICATIONS. NVIDIA MAKES NO WARRANTIES, EXPRESSED, IMPLIED, STATUTORY OR OTHERWISE WITH RESPECT TO THE MATERIALS OR OTHERWISE, AND EXPRESSLY DISCLAIMS ALL IMPLIED WARRANTIES INCLUDING, WITHOUT LIMITATION, THE WARRANTIES OF DESIGN, OF NONINFRINGEMENT, MERCHANTABILITY OR FITNESS FOR A PARTICULAR PURPOSE, OR ARISING FROM A COURSE OF DEALING, TRADE USAGE, TRADE PRACTICE, OR INDUSTRY STANDARDS.

MICRO-STAR INT'L CO.,LTD

MS-V317

Size	Document Description	Rev
Custom	PS: 5V, PEX_VDD	1.0

Date: Wednesday, August 20, 2014 | Sheet 25 of 37

NVIDIA CORPORATION
2701 SAN TOMAS EXPRESSWAY
SANTA CLARA, CA 95050, USA

NV_PN	600-1G401-BASE-QS1		
PCB REV	PG401-A02	PAGE	25 OF 37
BOM REV	A	DATE	04-AUG-2014

Page26: NA

MICRO-STAR INT'L CO.,LTD

MS-V317

Size	Document Description	Rev
Custom	NA	1.0

Date: Wednesday, August 20, 2014 Sheet 26 of 37

ASSEMBLY	BASE LEVEL GENERIC SCHEMATIC ONLY
PAGE DETAIL	PS: FBVDDQ

ALL NVIDIA DESIGN SPECIFICATIONS, REFERENCE SPECIFICATIONS, REFERENCE BOARDS, FILES, DRAWINGS, DIAGNOSTICS, LISTS AND OTHER DOCUMENTS OR INFORMATION (TOGETHER AND SEPARATELY, 'MATERIALS') ARE BEING PROVIDED 'AS IS'. THE MATERIALS MAY CONTAIN KNOWN AND UNKNOWN VIOLATIONS OR DEVIATIONS OF INDUSTRY STANDARDS AND SPECIFICATIONS. NVIDIA MAKES NO WARRANTIES, EXPRESSED, IMPLIED, STATUTORY OR OTHERWISE WITH RESPECT TO THE MATERIALS OR OTHERWISE, AND EXPRESSLY DISCLAIMS ALL IMPLIED WARRANTIES INCLUDING, WITHOUT LIMITATION, THE WARRANTIES OF DESIGN, OF NONINFRINGEMENT, MERCHANTABILITY OR FITNESS FOR A PARTICULAR PURPOSE, OR ARISING FROM A COURSE OF DEALING, TRADE USAGE, TRADE PRACTICE, OR INDUSTRY STANDARDS.

NVIDIA CORPORATION
2701 SAN TOMAS EXPRESSWAY
SANTA CLARA, CA 95050, USA

NV_PN	600-1G401-BASE-QS1		
PCB REV	PG401-A02	PAGE	26 OF 37
BOM REV	A	DATE	04-AUG-2014

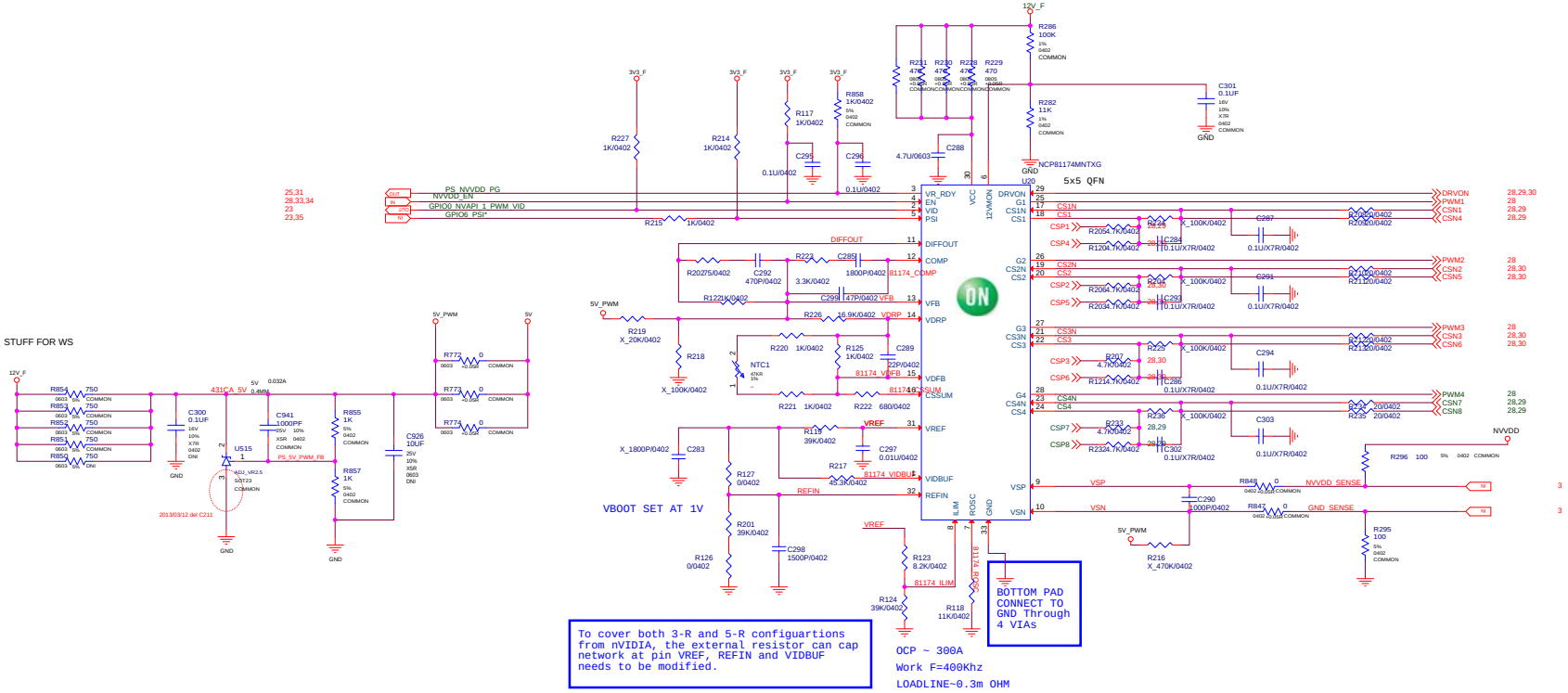

ASSEMBLY	BASE LEVEL GENERIC SCHEMATIC ONLY
PAGE DETAIL	PS: NVVDD Controller

ALL NVIDIA DESIGN SPECIFICATIONS, REFERENCE SPECIFICATIONS, REFERENCE BOARDS, FILES, DRAWINGS, DIAGNOSTICS, LISTS AND OTHER DOCUMENTS OR INFORMATION (TOGETHER AND SEPARATELY, 'MATERIALS') ARE BEING PROVIDED 'AS IS'. THE MATERIALS MAY CONTAIN KNOWN AND UNKNOWN VIOLATIONS OR DEVIATIONS OF INDUSTRY STANDARDS AND SPECIFICATIONS. NVIDIA MAKES NO WARRANTIES, EXPRESSED, IMPLIED, STATUTORY OR OTHERWISE WITH RESPECT TO THE MATERIALS OR OTHERWISE, AND EXPRESSLY DISCLAIMS ALL IMPLIED WARRANTIES INCLUDING, WITHOUT LIMITATION, THE WARRANTIES OF DESIGN, OF NONINFRINGEMENT, MERCHANTABILITY OR FITNESS FOR A PARTICULAR PURPOSE, OR ARISING FROM A COURSE OF DEALING, TRADE USAGE, TRADE PRACTICE, OR INDUSTRY STANDARDS.

MICRO-STAR INT'L CO.,LTD

MS-V317

Size	Document Description	Rev
Custom	PS: NVVDD Controller	1.0

Date: Wednesday, August 20, 2014 Sheet 27 of 37

NVIDIA CORPORATION
2701 SAN TOMAS EXPRESSWAY
SANTA CLARA, CA 95050, USA

NV_PN	600-1G401-BASE-QS1		
PCB REV	PG401-A02	PAGE	27 OF 37
BOM REV	A	DATE	04-AUG-2014

Page28: NVVDD PHASE DOUBLERS

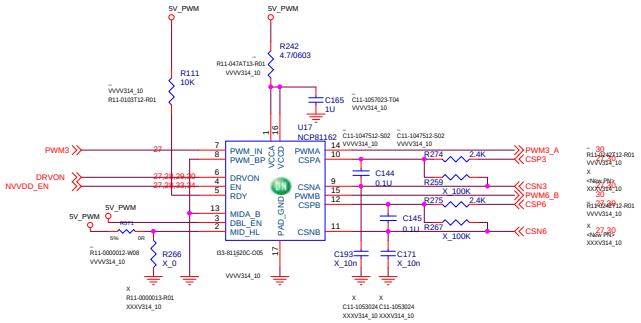

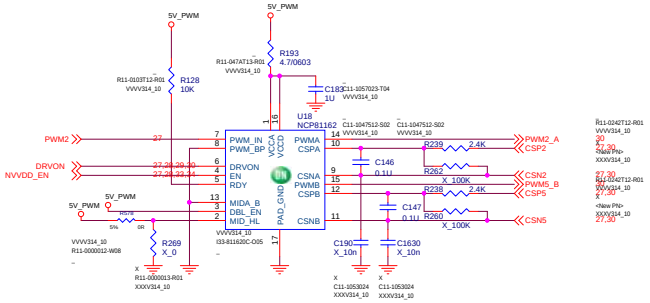

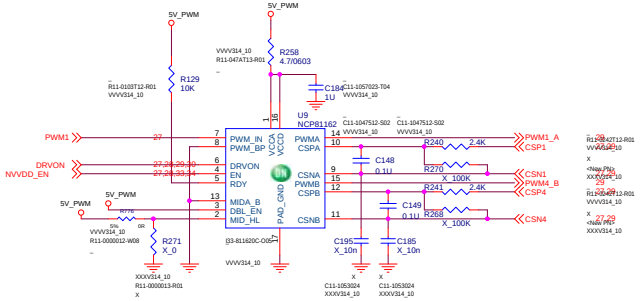

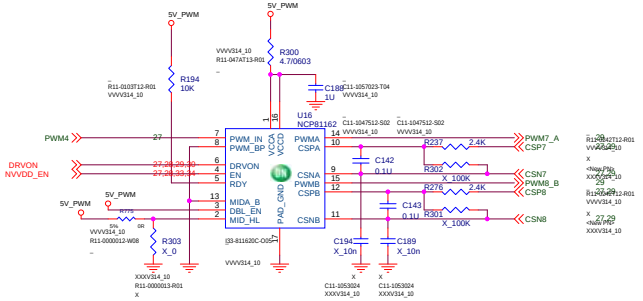

MICRO-STAR INT'L CO.,LTD	
MS-V317	
Size: Custom	Document Description: NVVDD PHASE DOUBLERS
Rev: 1.0	
Date: Wednesday, August 20, 2014	Sheet 28 of 37

ASSEMBLY	BASE LEVEL GENERIC SCHEMATIC ONLY
PAGE DETAIL	PS: NVVDD Phase 1,2

ALL NVIDIA DESIGN SPECIFICATIONS, REFERENCE SPECIFICATIONS, REFERENCE BOARDS, FILES, DRAWINGS, DIAGNOSTICS, LISTS AND OTHER DOCUMENTS OR INFORMATION (TOGETHER AND SEPARATELY, 'MATERIALS') ARE BEING PROVIDED 'AS IS'. THE MATERIALS MAY CONTAIN KNOWN AND UNKNOWN VIOLATIONS OR DEVIATIONS OF INDUSTRY STANDARDS AND SPECIFICATIONS. NVIDIA MAKES NO WARRANTIES, EXPRESSED, IMPLIED, STATUTORY OR OTHERWISE WITH RESPECT TO THE MATERIALS OR OTHERWISE, AND EXPRESSLY DISCLAIMS ALL IMPLIED WARRANTIES INCLUDING, WITHOUT LIMITATION, THE WARRANTIES OF DESIGN, OF NONINFRINGEMENT, MERCHANTABILITY OR FITNESS FOR A PARTICULAR PURPOSE, OR ARISING FROM A COURSE OF DEALING, TRADE USAGE, TRADE PRACTICE, OR INDUSTRY STANDARDS.

NVIDIA CORPORATION
2701 SAN TOMAS EXPRESSWAY
SANTA CLARA, CA 95050, USA

NV_PN	600-1G401-BASE-QS1		
PCB REV	PG401-A02	PAGE	28 OF 37
BOM REV	A	DATE	04-AUG-2014

Page29: PS: NVVDD Phase 1,4,7,8

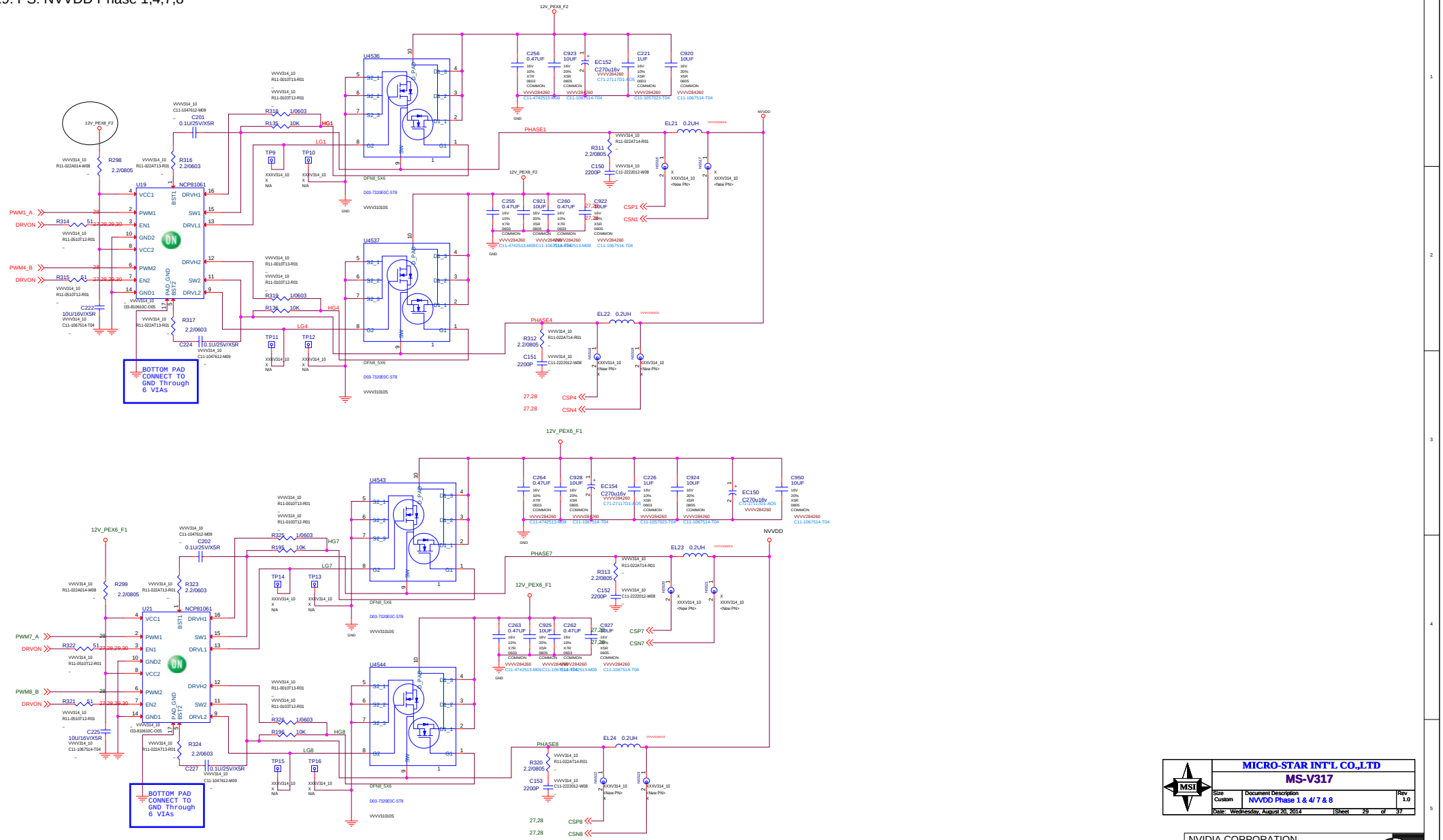

MICRO-STAR INT'L CO.,LTD	
MS-V317	
Size: Custom	Document Description: NVVDD Phase 1 & 4/ 7 & 8
Rev: 1.0	
Date: Wednesday, August 20, 2014	Sheet 29 of 37

ASSEMBLY	BASE LEVEL GENERIC SCHEMATIC ONLY
PAGE DETAIL	PS: NVVDD Phase 3,4

ALL NVIDIA DESIGN SPECIFICATIONS, REFERENCE SPECIFICATIONS, REFERENCE BOARDS, FILES, DRAWINGS, DIAGNOSTICS, LISTS AND OTHER DOCUMENTS OR INFORMATION (TOGETHER AND SEPARATELY, 'MATERIALS') ARE BEING PROVIDED 'AS IS'. THE MATERIALS MAY CONTAIN KNOWN AND UNKNOWN VIOLATIONS OR DEVIATIONS OF INDUSTRY STANDARDS AND SPECIFICATIONS. NVIDIA MAKES NO WARRANTIES, EXPRESSED, IMPLIED, STATUTORY OR OTHERWISE WITH RESPECT TO THE MATERIALS OR OTHERWISE, AND EXPRESSLY DISCLAIMS ALL IMPLIED WARRANTIES INCLUDING, WITHOUT LIMITATION, THE WARRANTIES OF DESIGN, OF NONINFRINGEMENT, MERCHANTABILITY OR FITNESS FOR A PARTICULAR PURPOSE, OR ARISING FROM A COURSE OF DEALING, TRADE USAGE, TRADE PRACTICE, OR INDUSTRY STANDARDS.

NVIDIA CORPORATION
2701 SAN TOMAS EXPRESSWAY
SANTA CLARA, CA 95050, USA

NV_PN	600-1G401-BASE-QS1		
PCB REV	PG401-A02	PAGE	29 OF 37
BOM REV	A	DATE	04-AUG-2014

Page30: PS: NVVDD Phase 3,6,2,5

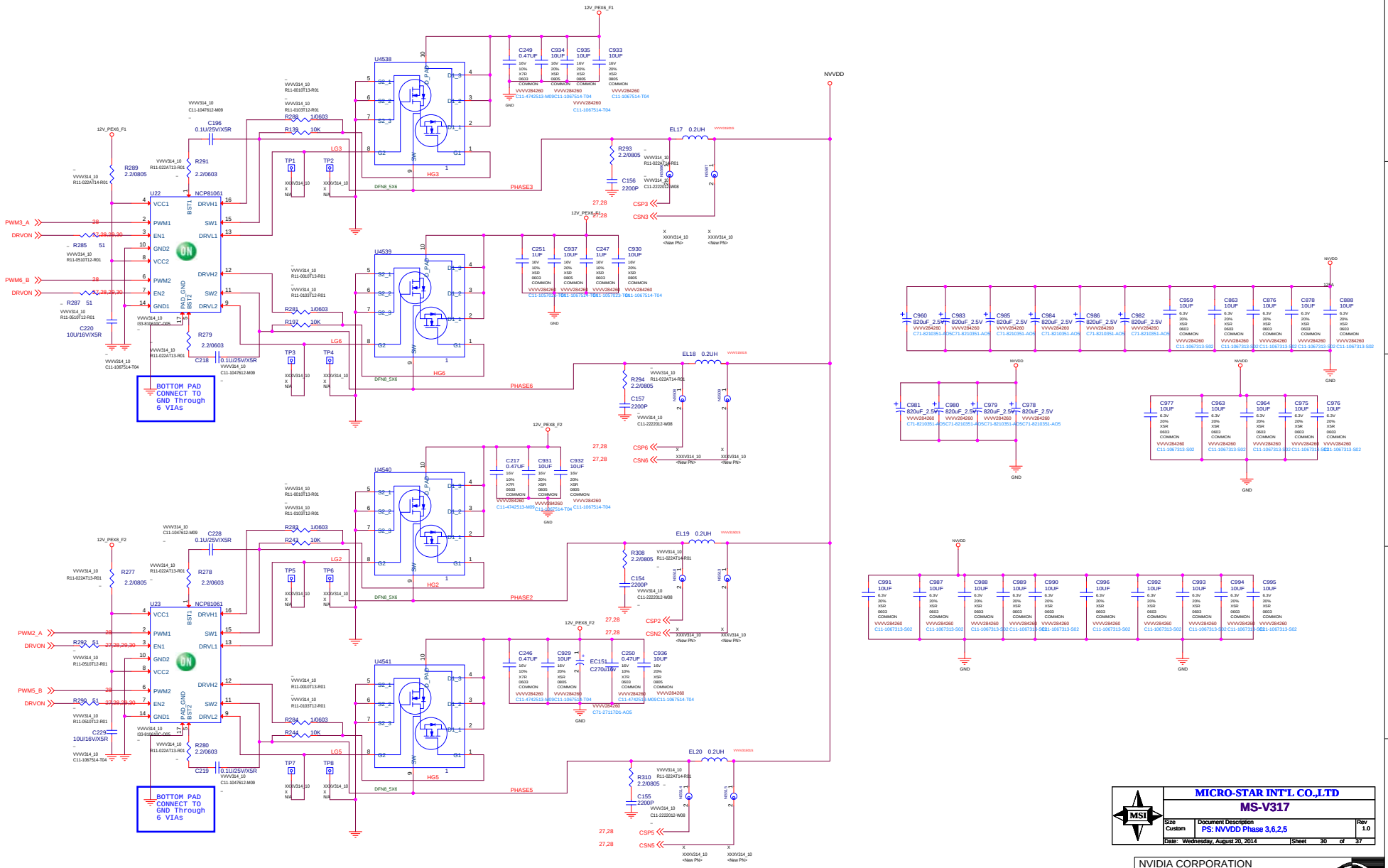

ASSEMBLY	BASE LEVEL GENERIC SCHEMATIC ONLY
PAGE DETAIL	PS: NVVDD Phase 5, 6

ALL NVIDIA DESIGN SPECIFICATIONS, REFERENCE SPECIFICATIONS, REFERENCE BOARDS, FILES, DRAWINGS, DIAGNOSTICS, LISTS AND OTHER DOCUMENTS OR INFORMATION (TOGETHER AND SEPARATELY, 'MATERIALS') ARE BEING PROVIDED 'AS IS'. THE MATERIALS MAY CONTAIN KNOWN AND UNKNOWN VIOLATIONS OR DEVIATIONS OF INDUSTRY STANDARDS AND SPECIFICATIONS. NVIDIA MAKES NO WARRANTIES, EXPRESSED, IMPLIED, STATUTORY OR OTHERWISE WITH RESPECT TO THE MATERIALS OR OTHERWISE, AND EXPRESSLY DISCLAIMS ALL IMPLIED WARRANTIES INCLUDING, WITHOUT LIMITATION, THE WARRANTIES OF DESIGN, OF NONINFRINGEMENT, MERCHANTABILITY OR FITNESS FOR A PARTICULAR PURPOSE, OR ARISING FROM A COURSE OF DEALING, TRADE USAGE, TRADE PRACTICE, OR INDUSTRY STANDARDS.

MICRO-STAR INT'L CO.,LTD

MS-V317

Size	Document Description	Rev
Custom	PS: NVVDD Phase 3,6,2,5	1.0
Date: Wednesday, August 20, 2014	Sheet 30 of 37	

NVIDIA CORPORATION
2701 SAN TOMAS EXPRESSWAY
SANTA CLARA, CA 95050, USA

NV_PN	600-1G401-BASE-QS1		
PCB REV	PG401-A02	PAGE	30 OF 37
BOM REV	A	DATE	04-AUG-2014

Page31: FBVDDQ

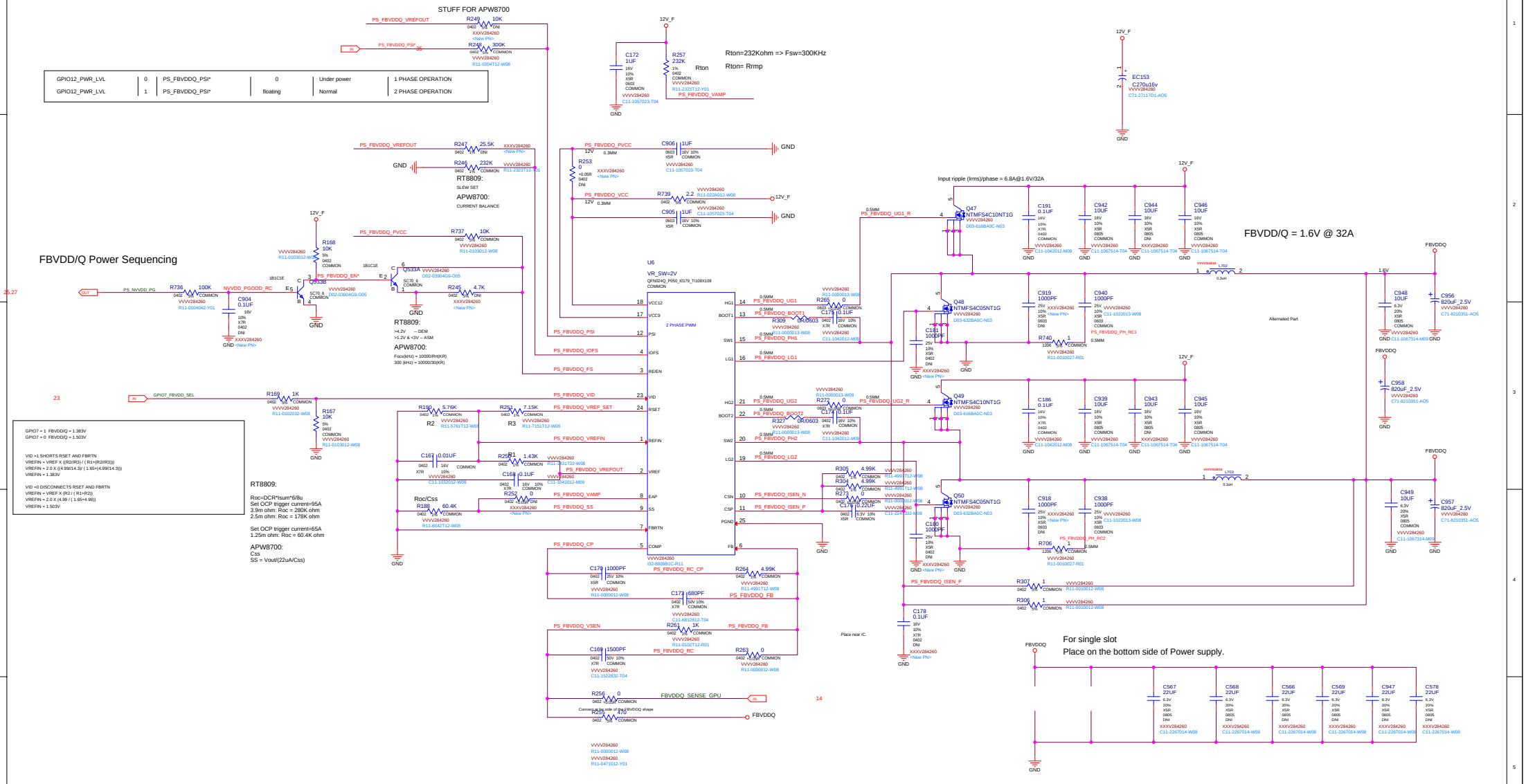

MICRO-STAR INT'L CO.,LTD

MS-V317

Size	Document Description	Rev
Custom	FBVDDQ	1.0

Date: Wednesday, August 20, 2014 Sheet 31 of 37

NVIDIA CORPORATION
2701 SAN TOMAS EXPRESSWAY
SANTA CLARA, CA 95050, USA

ASSEMBLY	BASE LEVEL GENERIC SCHEMATIC ONLY		
PAGE DETAIL	PS: Dynamic Power Balance Logic		
NV_PN	600-1G401-BASE-QS1		
PCB REV	PG401-A02	PAGE	31 OF 37
BOM REV	A	DATE	04-AUG-2014

ALL NVIDIA DESIGN SPECIFICATIONS, REFERENCE SPECIFICATIONS, REFERENCE BOARDS, FILES, DRAWINGS, DIAGNOSTICS, LISTS AND OTHER DOCUMENTS OR INFORMATION (TOGETHER AND SEPARATELY, 'MATERIALS') ARE BEING PROVIDED 'AS IS'. THE MATERIALS MAY CONTAIN KNOWN AND UNKNOWN VIOLATIONS OR DEVIATIONS OF INDUSTRY STANDARDS AND SPECIFICATIONS. NVIDIA MAKES NO WARRANTIES, EXPRESSED, IMPLIED, STATUTORY OR OTHERWISE WITH RESPECT TO THE MATERIALS OR OTHERWISE, AND EXPRESSLY DISCLAIMS ALL IMPLIED WARRANTIES INCLUDING, WITHOUT LIMITATION, THE WARRANTIES OF DESIGN, OF NONINFRINGEMENT, MERCHANTABILITY OR FITNESS FOR A PARTICULAR PURPOSE, OR ARISING FROM A COURSE OF DEALING, TRADE USAGE, TRADE PRACTICE, OR INDUSTRY STANDARDS.

Page32: 7511-FAN

Thermal IC : NCT7511Y

Layout notice :
*Add ground shielding for D+ and Dtraces.
*D+/D- route has to be away from the high noise area.
*The recommended traces width and ground shielding spacing are 10mils.

Please refer datasheet
TCRIT_SET Table
If floating,shutdown temp. set to 65℃

Thermal Diode

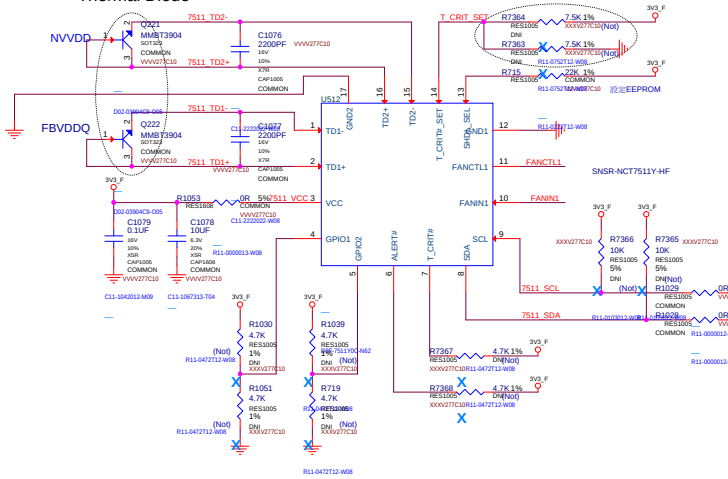

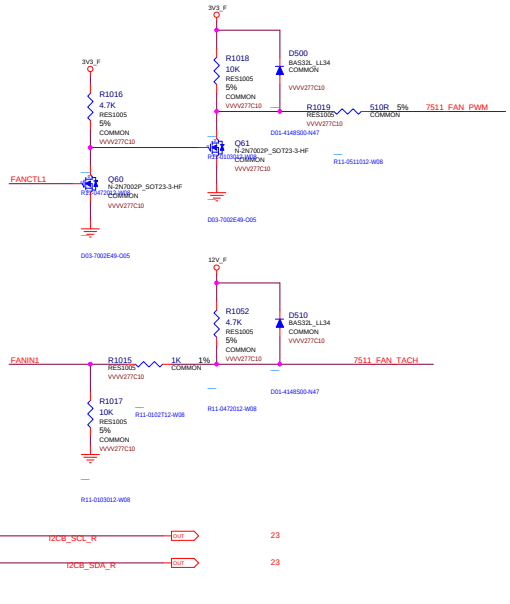

EEPROM

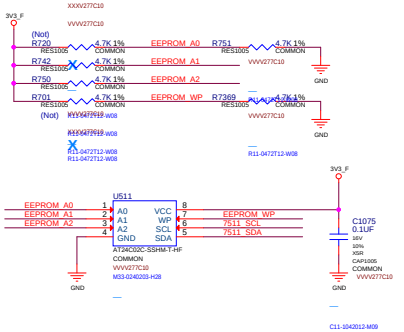

Fan connector option

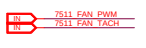

ASSEMBLY	BASE LEVEL GENERIC SCHEMATIC ONLY
PAGE DETAIL	PS: Dynamic Power Balance Phases

ALL NVIDIA DESIGN SPECIFICATIONS, REFERENCE SPECIFICATIONS, REFERENCE BOARDS, FILES, DRAWINGS, DIAGNOSTICS, LISTS AND OTHER DOCUMENTS OR INFORMATION (TOGETHER AND SEPARATELY, 'MATERIALS') ARE BEING PROVIDED 'AS IS'. THE MATERIALS MAY CONTAIN KNOWN AND UNKNOWN VIOLATIONS OR DEVIATIONS OF INDUSTRY STANDARDS AND SPECIFICATIONS. NVIDIA MAKES NO WARRANTIES, EXPRESSED, IMPLIED, STATUTORY OR OTHERWISE WITH RESPECT TO THE MATERIALS OR OTHERWISE, AND EXPRESSLY DISCLAIMS ALL IMPLIED WARRANTIES INCLUDING, WITHOUT LIMITATION, THE WARRANTIES OF DESIGN, OF NONINFRINGEMENT, MERCHANTABILITY OR FITNESS FOR A PARTICULAR PURPOSE, OR ARISING FROM A COURSE OF DEALING, TRADE USAGE, TRADE PRACTICE, OR INDUSTRY STANDARDS.

MICRO-STAR INT'L CO.,LTD			
MS-V317			
Size: Custom	Document Description: 7511-FAN		Rev: 1.0
Date: Wednesday, August 20, 2014	Sheet 32 of 37		

NVIDIA CORPORATION
2701 SAN TOMAS EXPRESSWAY
SANTA CLARA, CA 95050, USA

NV_PN	600-1G401-BASE-QS1		
PCB REV	PG401-A02	PAGE	32 OF 37
BOM REV	A	DATE	04-AUG-2014

Page33: PS: Inputs, Filtering, and Monitoring

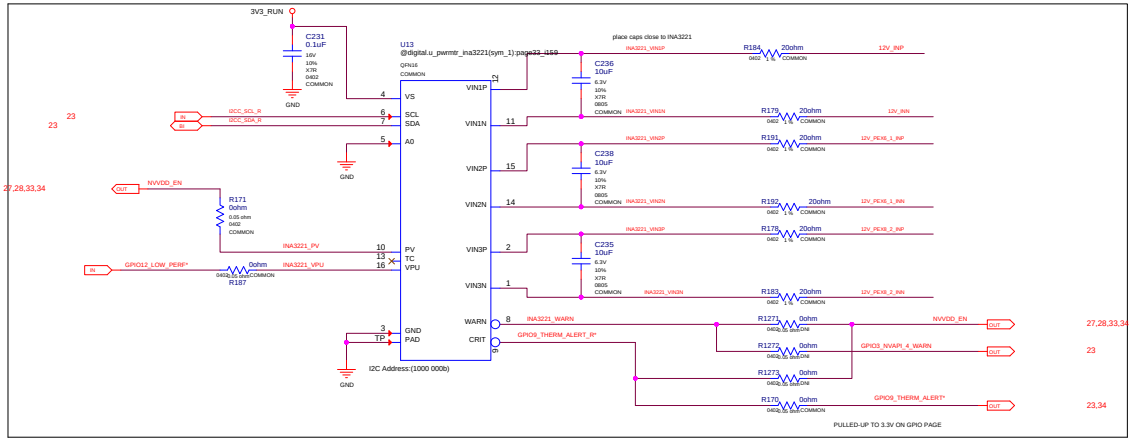

PEX 3V3 INPUT - 10W

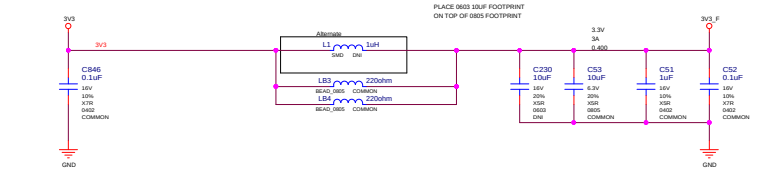

PEX_12V INPUT - 66W

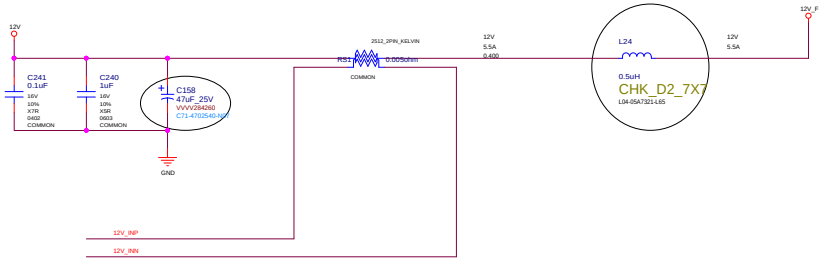

PEX6 INPUT 1 - 2x3 PCIE CON 75W

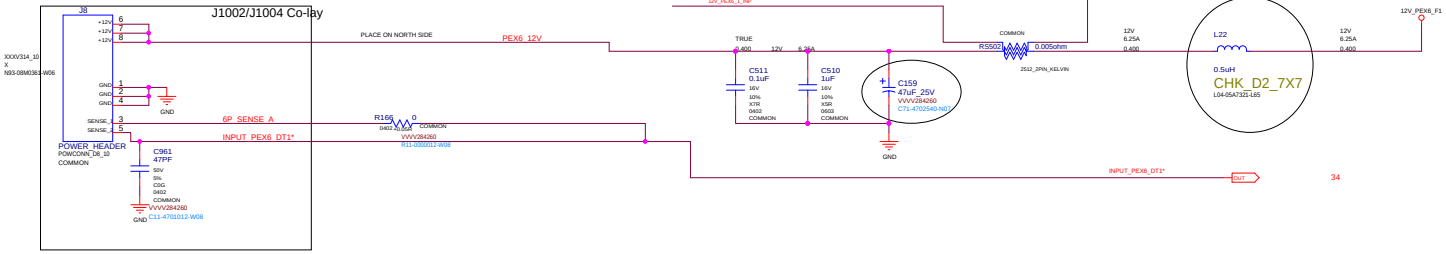

PEX8 INPUT 2 - 2x4 PCIE CON 150W

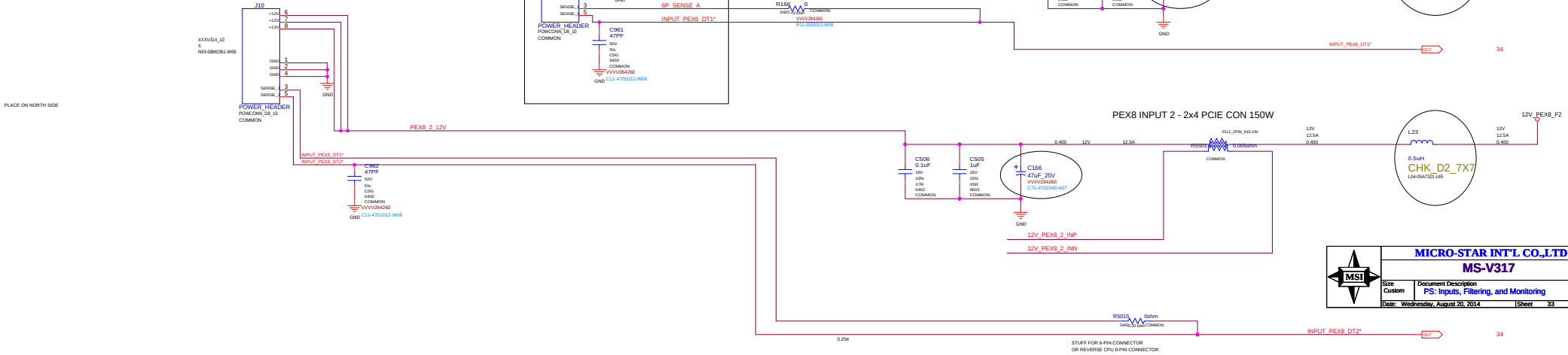

MICRO-STAR INT'L CO.,LTD	
MS-V317	
Size: Custom	Document Description: PS: Inputs, Filtering, and Monitoring — Rev: 1.0
Date: Wednesday, August 20, 2014	Sheet 33 of 37

ASSEMBLY	BASE LEVEL GENERIC SCHEMATIC ONLY
PAGE DETAIL	PS: Inputs, Filtering, and Monitoring

ALL NVIDIA DESIGN SPECIFICATIONS, REFERENCE SPECIFICATIONS, REFERENCE BOARDS, FILES, DRAWINGS, DIAGNOSTICS, LISTS AND OTHER DOCUMENTS OR INFORMATION (TOGETHER AND SEPARATELY, 'MATERIALS') ARE BEING PROVIDED 'AS IS'. THE MATERIALS MAY CONTAIN KNOWN AND UNKNOWN VIOLATIONS OR DEVIATIONS OF INDUSTRY STANDARDS AND SPECIFICATIONS. NVIDIA MAKES NO WARRANTIES, EXPRESSED, IMPLIED, STATUTORY OR OTHERWISE WITH RESPECT TO THE MATERIALS OR OTHERWISE, AND EXPRESSLY DISCLAIMS ALL IMPLIED WARRANTIES INCLUDING, WITHOUT LIMITATION, THE WARRANTIES OF DESIGN, OF NONINFRINGEMENT, MERCHANTABILITY OR FITNESS FOR A PARTICULAR PURPOSE, OR ARISING FROM A COURSE OF DEALING, TRADE USAGE, TRADE PRACTICE, OR INDUSTRY STANDARDS.

NVIDIA CORPORATION
2701 SAN TOMAS EXPRESSWAY
SANTA CLARA, CA 95050, USA

NV_PN	600-1G401-BASE-QS1		
PCB REV	PG401-A02	PAGE	33 OF 37
BOM REV	A	DATE	04-AUG-2014

Page34: PS: Shutdown

THERM OVERT SHUTDOWN LATCH

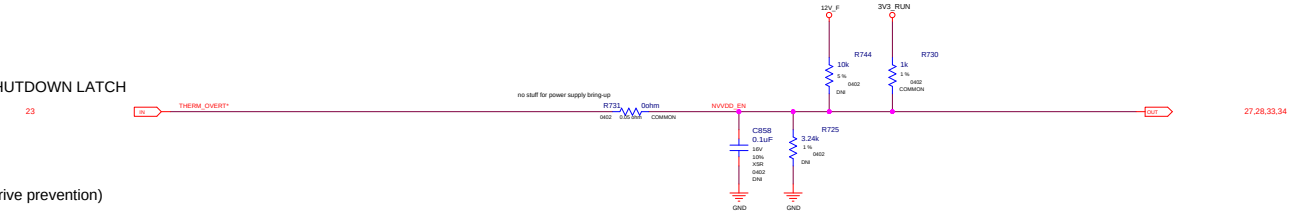

IFP_IOVDD (backdrive prevention)

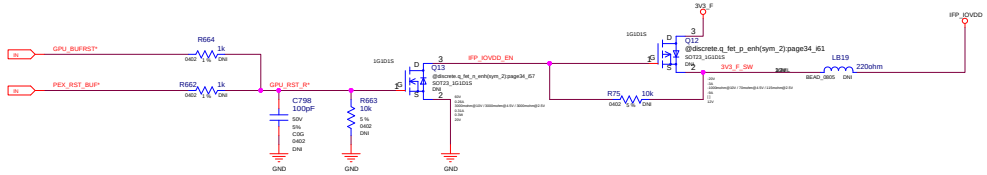

PEX Input - NVVDD Power Sequence

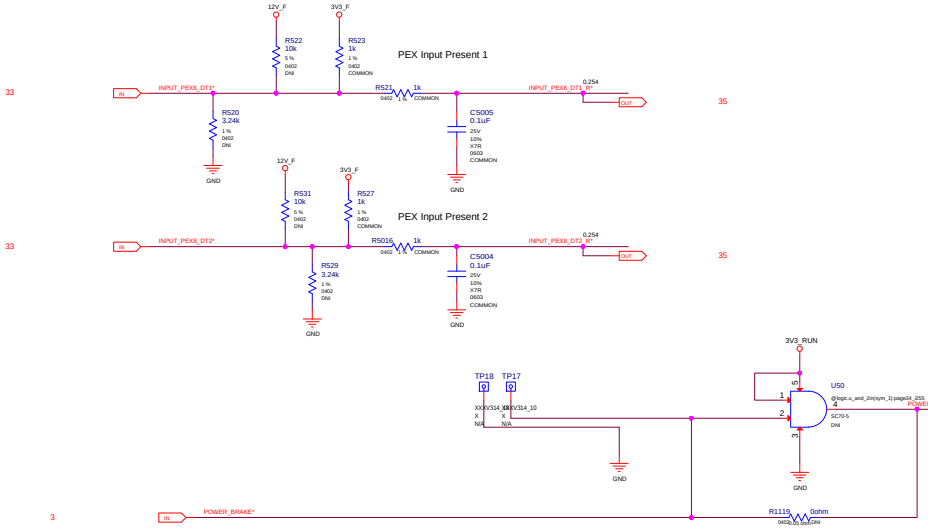

POWER CONNECTOR HOT-UNPLUG DETECT

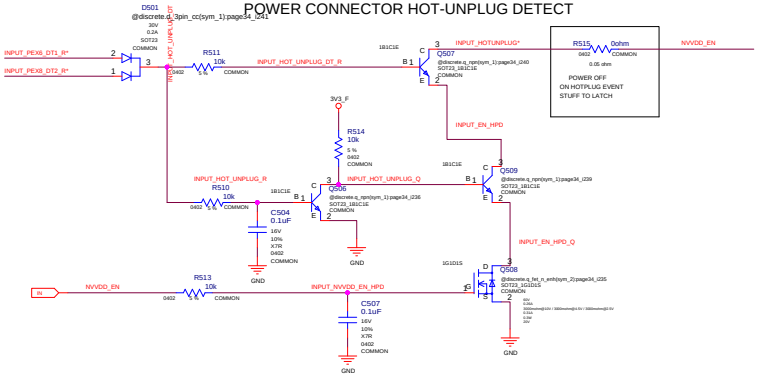

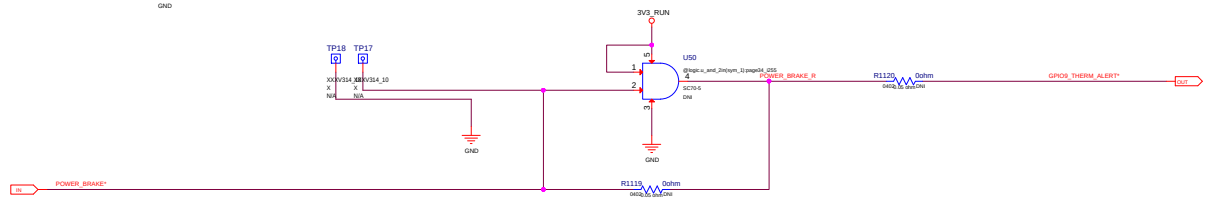

ASSEMBLY	BASE LEVEL GENERIC SCHEMATIC ONLY
PAGE DETAIL	PS: Shutdown

ALL NVIDIA DESIGN SPECIFICATIONS, REFERENCE SPECIFICATIONS, REFERENCE BOARDS, FILES, DRAWINGS, DIAGNOSTICS, LISTS AND OTHER DOCUMENTS OR INFORMATION (TOGETHER AND SEPARATELY, 'MATERIALS') ARE BEING PROVIDED 'AS IS'. THE MATERIALS MAY CONTAIN KNOWN AND UNKNOWN VIOLATIONS OR DEVIATIONS OF INDUSTRY STANDARDS AND SPECIFICATIONS. NVIDIA MAKES NO WARRANTIES, EXPRESSED, IMPLIED, STATUTORY OR OTHERWISE WITH RESPECT TO THE MATERIALS OR OTHERWISE, AND EXPRESSLY DISCLAIMS ALL IMPLIED WARRANTIES INCLUDING, WITHOUT LIMITATION, THE WARRANTIES OF DESIGN, OF NONINFRINGEMENT, MERCHANTABILITY OR FITNESS FOR A PARTICULAR PURPOSE, OR ARISING FROM A COURSE OF DEALING, TRADE USAGE, TRADE PRACTICE, OR INDUSTRY STANDARDS.

MICRO-STAR INT'L CO.,LTD			
MS-V317			
Size: Custom	Document Description: PS: Shutdown		Rev: 1.0
Date: Wednesday, August 20, 2014	Sheet 34 of 37		

NVIDIA CORPORATION
2701 SAN TOMAS EXPRESSWAY
SANTA CLARA, CA 95050, USA

NV_PN	600-1G401-BASE-QS1		
PCB REV	PG401-A02	PAGE	34 OF 37
BOM REV	A	DATE	04-AUG-2014

Page35: PS: 12V Current Steering, PSI Control, and LED

MICRO-STAR INT'L CO.,LTD	
MS-V317	
Size: Custom	Document Description: 12V Current Steering, PSI Control, and LED
Rev: 1.0	
Date: Wednesday, August 20, 2014	Sheet 35 of 37

PEX Input - 12V Current Steering FETs

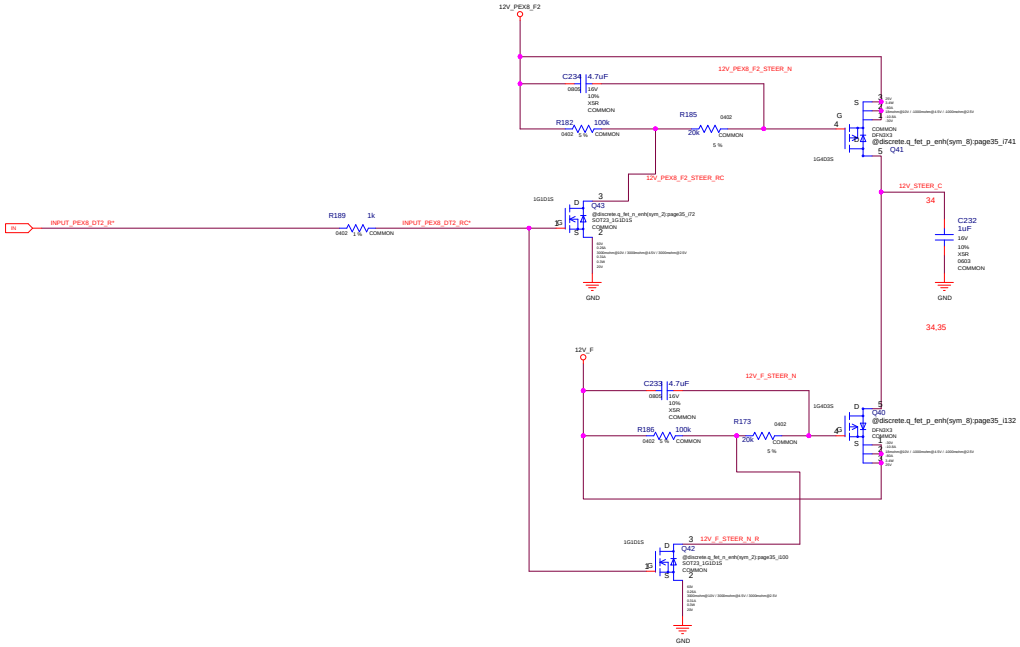

PEX Input - Power Level/PSI* Control

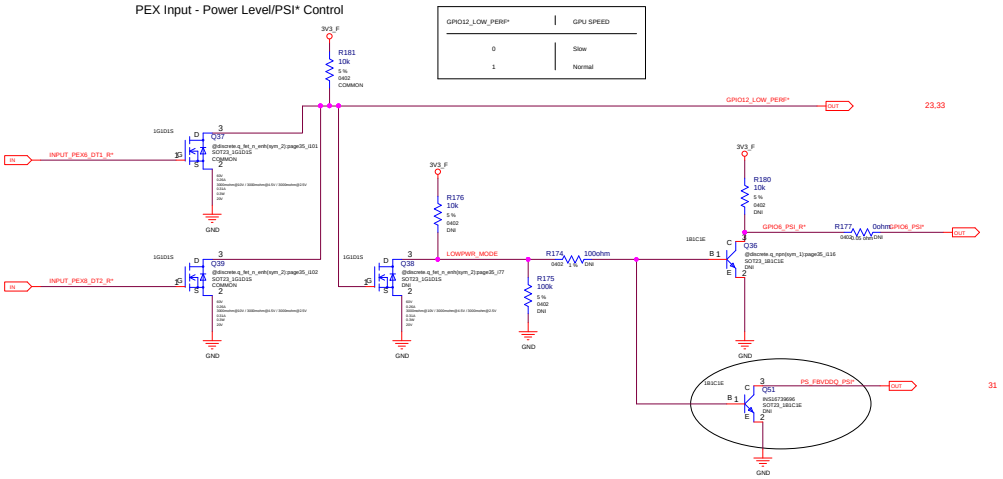

GeForce Logo LED

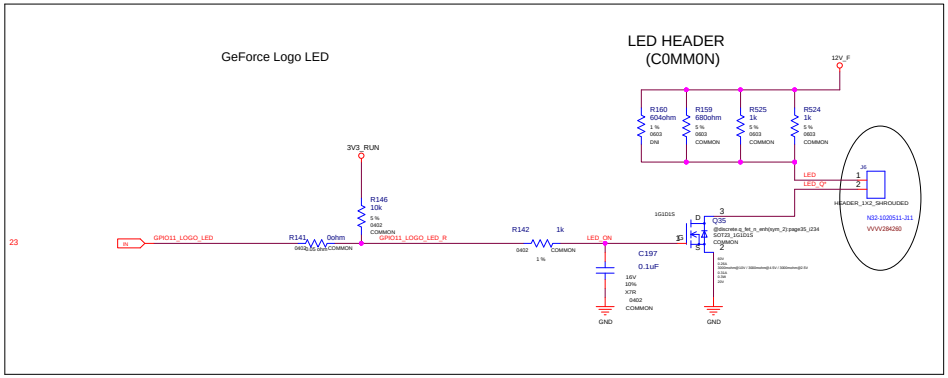

LED HEADER (C0MM0N)

SLI LED (GEFORCE ONLY)

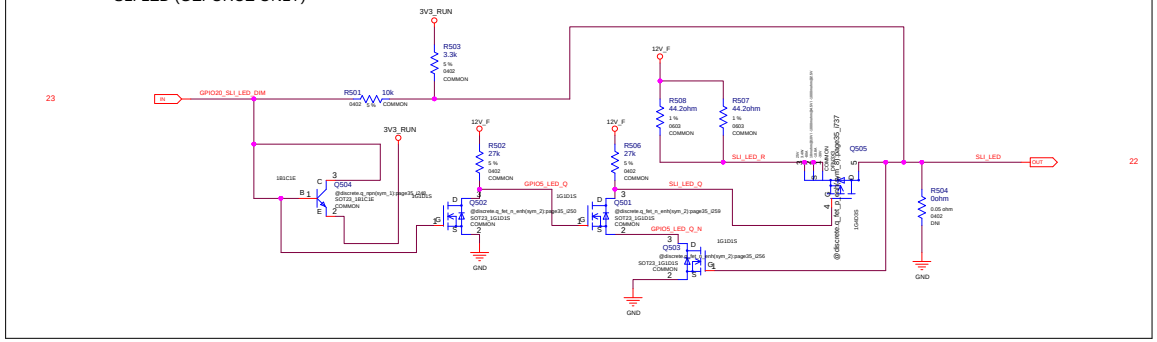

ASSEMBLY	BASE LEVEL GENERIC SCHEMATIC ONLY
PAGE DETAIL	PS: 12V Current Steering PSI Control and LED

ALL NVIDIA DESIGN SPECIFICATIONS, REFERENCE SPECIFICATIONS, REFERENCE BOARDS, FILES, DRAWINGS, DIAGNOSTICS, LISTS AND OTHER DOCUMENTS OR INFORMATION (TOGETHER AND SEPARATELY, 'MATERIALS') ARE BEING PROVIDED 'AS IS'. THE MATERIALS MAY CONTAIN KNOWN AND UNKNOWN VIOLATIONS OR DEVIATIONS OF INDUSTRY STANDARDS AND SPECIFICATIONS. NVIDIA MAKES NO WARRANTIES, EXPRESSED, IMPLIED, STATUTORY OR OTHERWISE WITH RESPECT TO THE MATERIALS OR OTHERWISE, AND EXPRESSLY DISCLAIMS ALL IMPLIED WARRANTIES INCLUDING, WITHOUT LIMITATION, THE WARRANTIES OF DESIGN, OF NONINFRINGEMENT, MERCHANTABILITY OR FITNESS FOR A PARTICULAR PURPOSE, OR ARISING FROM A COURSE OF DEALING, TRADE USAGE, TRADE PRACTICE, OR INDUSTRY STANDARDS.

NVIDIA CORPORATION
2701 SAN TOMAS EXPRESSWAY
SANTA CLARA, CA 95050, USA

NV_PN	600-1G401-BASE-QS1		
PCB REV	PG401-A02	PAGE	35 OF 37
BOM REV	A	DATE	04-AUG-2014

Page36: Mechanical: Bracket/Thermal Solution

Brackets:

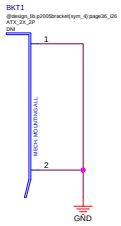

Bracket Screw

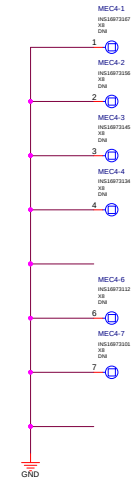

Mechanical Holes Symbol

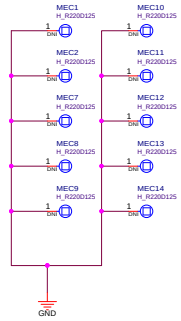

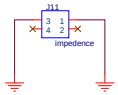

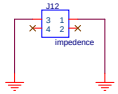

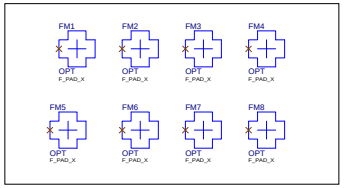

ASSEMBLY	BASE LEVEL GENERIC SCHEMATIC ONLY
PAGE DETAIL	MECH: Bracket/Thermal

ALL NVIDIA DESIGN SPECIFICATIONS, REFERENCE SPECIFICATIONS, REFERENCE BOARDS, FILES, DRAWINGS, DIAGNOSTICS, LISTS AND OTHER DOCUMENTS OR INFORMATION (TOGETHER AND SEPARATELY, 'MATERIALS') ARE BEING PROVIDED 'AS IS'. THE MATERIALS MAY CONTAIN KNOWN AND UNKNOWN VIOLATIONS OR DEVIATIONS OF INDUSTRY STANDARDS AND SPECIFICATIONS. NVIDIA MAKES NO WARRANTIES, EXPRESSED, IMPLIED, STATUTORY OR OTHERWISE WITH RESPECT TO THE MATERIALS OR OTHERWISE, AND EXPRESSLY DISCLAIMS ALL IMPLIED WARRANTIES INCLUDING, WITHOUT LIMITATION, THE WARRANTIES OF DESIGN, OF NONINFRINGEMENT, MERCHANTABILITY OR FITNESS FOR A PARTICULAR PURPOSE, OR ARISING FROM A COURSE OF DEALING, TRADE USAGE, TRADE PRACTICE, OR INDUSTRY STANDARDS.

MICRO-STAR INT'L CO.,LTD

MS-V317

Size	Document Description	Rev
Custom	Mechanical: Bracket/Thermal Solution	1.0

Date: Wednesday, August 20, 2014 Sheet 36 of 37

NVIDIA CORPORATION

2701 SAN TOMAS EXPRESSWAY

SANTA CLARA, CA 95050, USA

NV_PN	600-1G401-BASE-QS1		
PCB REV	PG401-A02	PAGE	36 OF 37
BOM REV	A	DATE	04-AUG-2014

Page37:
1.P17 增加DVI ESD
2.P18~P21 修改HDMI,DP footprint,　增加HDMI ESD
3.簡化ＳＬＩ線路
4.移除原本FBVDDQ線路
5.P27~P30 更換NVVD 線路
6.P31~32 移除dynamic power circuit/增加風扇7511線路
7.P33 更換反插8PIN,Input choke
8.P35 增加MEM PSI 晶體
9.Remove MICROCONTROLLER

MICRO-STAR INT'L CO.,LTD	
MS-V317	
Size: Custom	Document Description: NA
Rev: 1.0	
Date: Wednesday, August 20, 2014	Sheet 37 of 37

ASSEMBLY	BASE LEVEL GENERIC SCHEMATIC ONLY
PAGE DETAIL	MICROCONTROLLER

ALL NVIDIA DESIGN SPECIFICATIONS, REFERENCE SPECIFICATIONS, REFERENCE BOARDS, FILES, DRAWINGS, DIAGNOSTICS, LISTS AND OTHER DOCUMENTS OR INFORMATION (TOGETHER AND SEPARATELY, 'MATERIALS') ARE BEING PROVIDED 'AS IS'. THE MATERIALS MAY CONTAIN KNOWN AND UNKNOWN VIOLATIONS OR DEVIATIONS OF INDUSTRY STANDARDS AND SPECIFICATIONS. NVIDIA MAKES NO WARRANTIES, EXPRESSED, IMPLIED, STATUTORY OR OTHERWISE WITH RESPECT TO THE MATERIALS OR OTHERWISE, AND EXPRESSLY DISCLAIMS ALL IMPLIED WARRANTIES INCLUDING, WITHOUT LIMITATION, THE WARRANTIES OF DESIGN, OF NONINFRINGEMENT, MERCHANTABILITY OR FITNESS FOR A PARTICULAR PURPOSE, OR ARISING FROM A COURSE OF DEALING, TRADE USAGE, TRADE PRACTICE, OR INDUSTRY STANDARDS.

NVIDIA CORPORATION
2701 SAN TOMAS EXPRESSWAY
SANTA CLARA, CA 95050, USA

NV_PN	600-1G401-BASE-QS1		
PCB REV	PG401-A02	PAGE	37 OF 37
BOM REV	A	DATE	04-AUG-2014