# P1071: GF108, 1024MB x16 DDR3, DVI+HDMI+VGA


Page 1: Overview
Page 2: Board Block Diagram
Page 3: PCI Express Interface
Page 4: GPU Frame Buffer
Page 5: FBA Partition
Page 6: FBB Partition
Page 7: Memory Decoupling
Page 8: DACA VGA
Page 9: DACB VGA Header
Page 10: TMDS Interface
Page 11: HDMI Interface
Page 12: Unused Interfaces, NVVDD Decoupling
Page 13: XTAL, ROM, JTAG, Misc
Page 14: Straps, Thermal, Mechanical
Page 15: Power Supply I: Misc Power, Thermal Shutdown
Page 16: Power Supply II: FBVDDQ
Page 17: Power Supply III: NVVDD



00029980 FOR MSI 顏鑫 CONFIDENTIAL RD(C)20110805001 RMA(丁德基) ONLY


| BRD | VARIANT | NVPN | ASSEMBLY |
|---|---|---|---|
| B | BASE | 600-11071-BASE-SCH | BASE LEVEL GENERIC SCHEMATIC ONLY, COMMON & NO_STUFF ASSEMBLY NOTES AND BOM NOT FINAL |
| 1 | SKU0001 | 600-11071-0001-100 | GF108-300-A1 625/1250/900MHz 1024MB/128bit DDR3, DVI-DL+HDMI+VGA |
| 2 | SKU0002 | 600-11071-0002-100 | GF108-200-A1 650/1300/900MHz 1024MB/128bit DDR3, DVI-DL+HDMI+VGA |
| 3 | <UNDEFINED> | <UNDEFINED> | <UNDEFINED> |
| 4 | <UNDEFINED> | <UNDEFINED> | <UNDEFINED> |
| 5 | <UNDEFINED> | <UNDEFINED> | <UNDEFINED> |
| 6 | <UNDEFINED> | <UNDEFINED> | <UNDEFINED> |
| 7 | <UNDEFINED> | <UNDEFINED> | <UNDEFINED> |
| 8 | <UNDEFINED> | <UNDEFINED> | <UNDEFINED> |
| 9 | <UNDEFINED> | <UNDEFINED> | <UNDEFINED> |
| 10 | <UNDEFINED> | <UNDEFINED> | <UNDEFINED> |
| 11 | <UNDEFINED> | <UNDEFINED> | <UNDEFINED> |
| 12 | <UNDEFINED> | <UNDEFINED> | <UNDEFINED> |
| 13 | <UNDEFINED> | <UNDEFINED> | <UNDEFINED> |
| 14 | <UNDEFINED> | <UNDEFINED> | <UNDEFINED> |
| 15 | <UNDEFINED> | <UNDEFINED> | <UNDEFINED> |

| | |
|---|---|
| ASSEMBLY | BASE LEVEL GENERIC SCHEMATIC ONLY, COMMON & NO_STUFF ASSEMBLY NOTES AND BOM NOT FINAL |
| PAGE DETAIL | Overview |


ALL NVIDIA DESIGN SPECIFICATIONS, REFERENCE SPECIFICATIONS, REFERENCE BOARDS, FILES, DRAWINGS, DIAGNOSTICS, LISTS AND OTHER DOCUMENTS OR INFORMATION (TOGETHER AND SEPARATELY, 'MATERIALS') ARE BEING PROVIDED 'AS IS'. THE MATERIALS MAY CONTAIN KNOWN AND UNKNOWN VIOLATIONS OR DEVIATIONS OF INDUSTRY STANDARDS AND SPECIFICATIONS. NVIDIA MAKES NO WARRANTIES, EXPRESSED, IMPLIED, STATUTORY OR OTHERWISE WITH RESPECT TO THE MATERIALS OR OTHERWISE, AND EXPRESSLY DISCLAIMS ALL IMPLIED WARRANTIES INCLUDING, WITHOUT LIMITATION, THE WARRANTIES OF DESIGN, OF NONINFRINGEMENT, MERCHANTABILITY OR FITNESS FOR A PARTICULAR PURPOSE, OR ARISING FROM A COURSE OF DEALING, TRADE USAGE, TRADE PRACTICE, OR INDUSTRY STANDARDS.



NVIDIA CORPORATION
2701 SAN TOMAS EXPRESSWAY
SANTA CLARA, CA 95050, USA


| | | | |
|---|---|---|---|
| NV_PN | 600-11071-BASE-SCH | | |
| PCB REV | P1071-A01 | PAGE | |
| BOM REV | A | DATE | 01-APR-2010 |

# Block Diagram

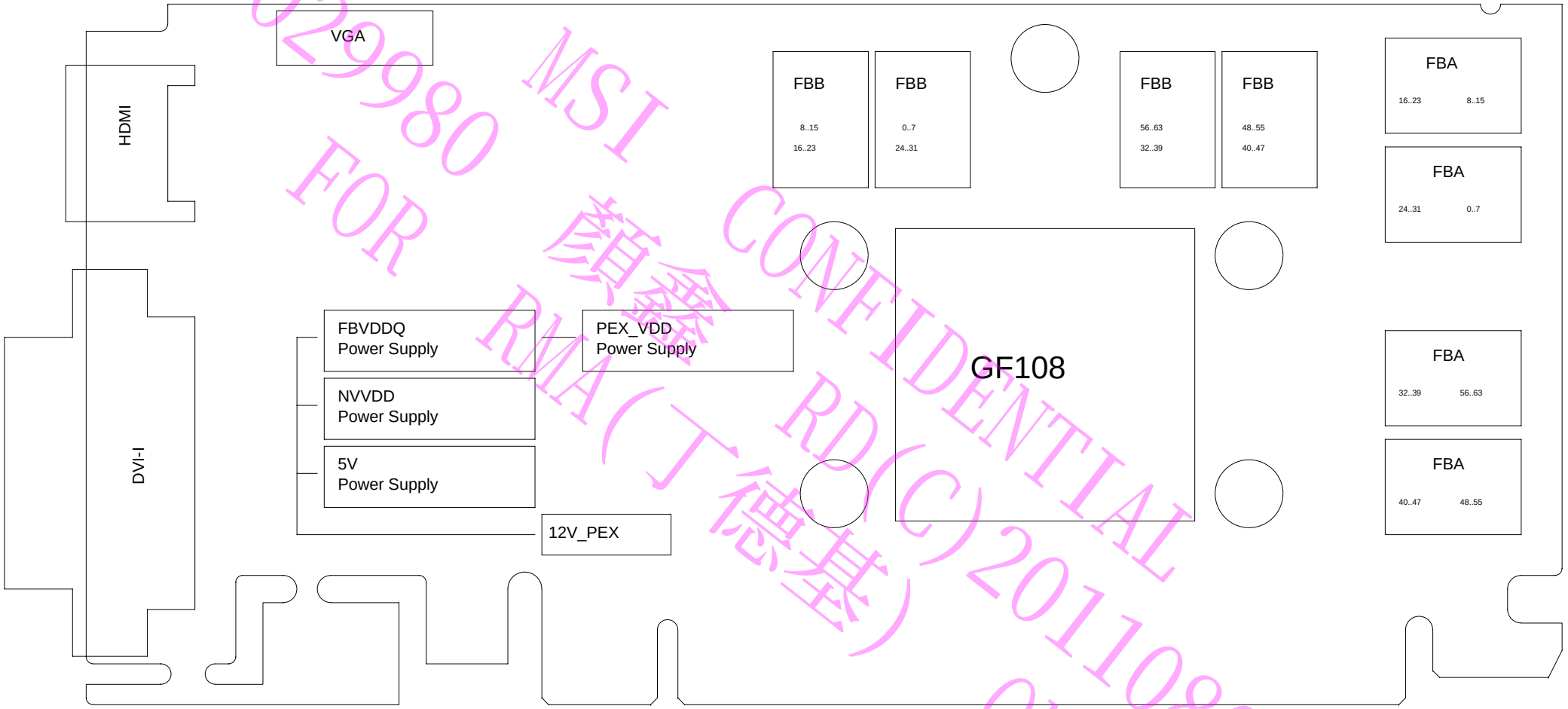


00029980 MSI CONFIDENTIAL
FOR 顏鑫 RD(C)20110805001
RMA(丁德基) ONLY

| | |
|---|---|
| ASSEMBLY | BASE LEVEL GENERIC SCHEMATIC ONLY, COMMON & NO_STUFF ASSEMBLY NOTES AND BOM NOT FINAL |
| PAGE DETAIL | Board Block Diagram |

ALL NVIDIA DESIGN SPECIFICATIONS, REFERENCE SPECIFICATIONS, REFERENCE BOARDS, FILES, DRAWINGS, DIAGNOSTICS, LISTS AND OTHER DOCUMENTS OR INFORMATION (TOGETHER AND SEPARATELY, 'MATERIALS') ARE BEING PROVIDED 'AS IS'. THE MATERIALS MAY CONTAIN KNOWN AND UNKNOWN VIOLATIONS OR DEVIATIONS OF INDUSTRY STANDARDS AND SPECIFICATIONS. NVIDIA MAKES NO WARRANTIES, EXPRESSED, IMPLIED, STATUTORY OR OTHERWISE WITH RESPECT TO THE MATERIALS OR OTHERWISE, AND EXPRESSLY DISCLAIMS ALL IMPLIED WARRANTIES INCLUDING, WITHOUT LIMITATION, THE WARRANTIES OF DESIGN, OF NONINFRINGEMENT, MERCHANTABILITY OR FITNESS FOR A PARTICULAR PURPOSE, OR ARISING FROM A COURSE OF DEALING, TRADE USAGE, TRADE PRACTICE, OR INDUSTRY STANDARDS.

NVIDIA CORPORATION
2701 SAN TOMAS EXPRESSWAY
SANTA CLARA, CA 95050, USA

| | | | |
|---|---|---|---|
| NV_PN | 600-11071-BASE-SCH | | |
| PCB REV | P1071-A01 | PAGE | |
| BOM REV | A | DATE | 01-APR-2010 |

# PCI Express Interface

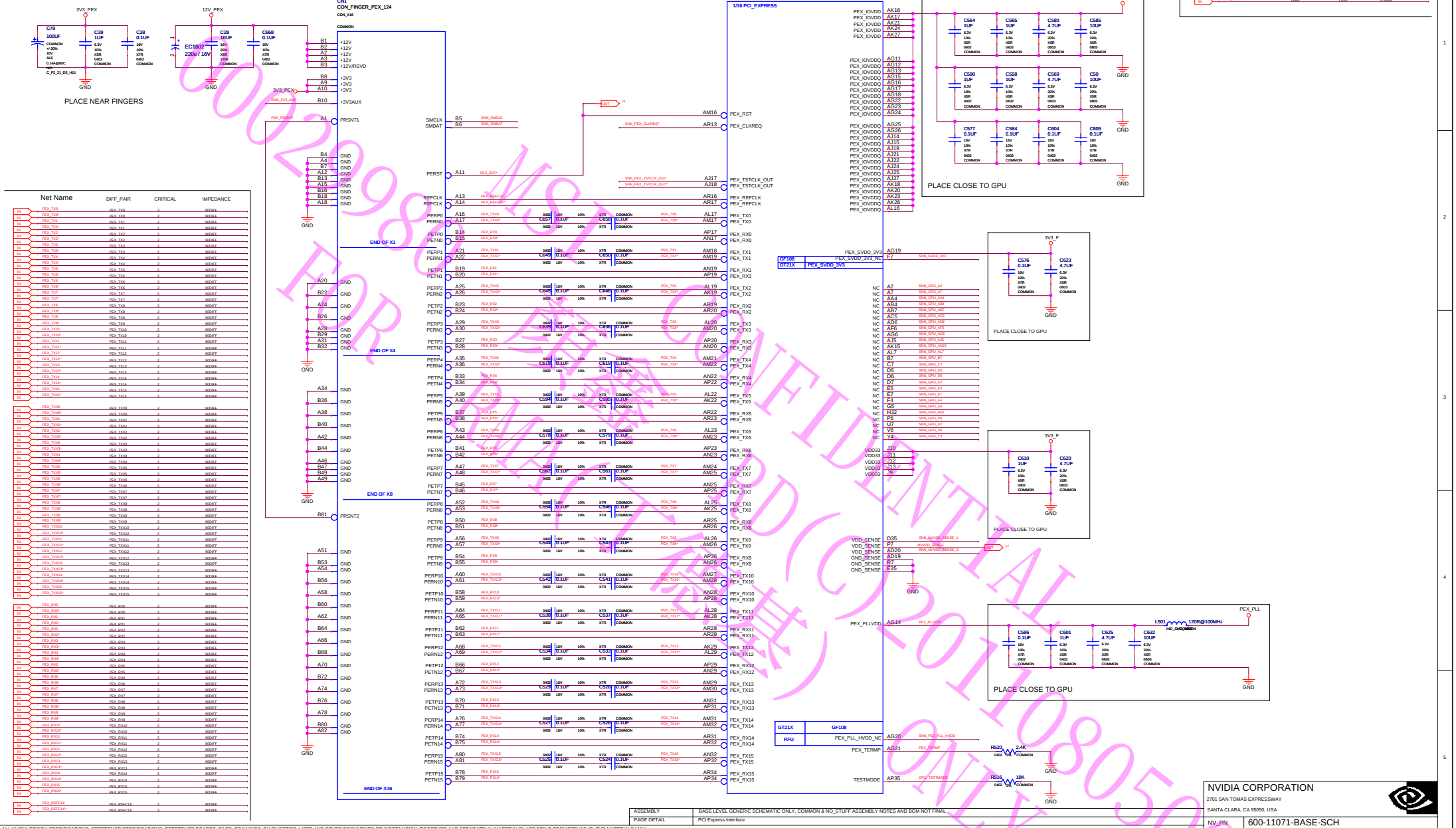


## Net Name

| Net Name | DIFF_PAIR | CRITICAL | IMPEDANCE |
|---|---|---|---|
| PEX_TX0 | PEX_TX0 | 2 | 90OHM |
| PEX_TX0* | PEX_TX0 | 2 | 90OHM |
| PEX_TX1 | PEX_TX1 | 2 | 90OHM |
| PEX_TX1* | PEX_TX1 | 2 | 90OHM |
| PEX_TX2 | PEX_TX2 | 2 | 90OHM |
| PEX_TX2* | PEX_TX2 | 2 | 90OHM |
| PEX_TX3 | PEX_TX3 | 2 | 90OHM |
| PEX_TX3* | PEX_TX3 | 2 | 90OHM |
| PEX_TX4 | PEX_TX4 | 2 | 90OHM |
| PEX_TX4* | PEX_TX4 | 2 | 90OHM |
| PEX_TX5 | PEX_TX5 | 2 | 90OHM |
| PEX_TX5* | PEX_TX5 | 2 | 90OHM |
| PEX_TX6 | PEX_TX6 | 2 | 90OHM |
| PEX_TX6* | PEX_TX6 | 2 | 90OHM |
| PEX_TX7 | PEX_TX7 | 2 | 90OHM |
| PEX_TX7* | PEX_TX7 | 2 | 90OHM |
| PEX_TX8 | PEX_TX8 | 2 | 90OHM |
| PEX_TX8* | PEX_TX8 | 2 | 90OHM |
| PEX_TX9 | PEX_TX9 | 2 | 90OHM |
| PEX_TX9* | PEX_TX9 | 2 | 90OHM |
| PEX_TX10 | PEX_TX10 | 2 | 90OHM |
| PEX_TX10* | PEX_TX10 | 2 | 90OHM |
| PEX_TX11 | PEX_TX11 | 2 | 90OHM |
| PEX_TX11* | PEX_TX11 | 2 | 90OHM |
| PEX_TX12 | PEX_TX12 | 2 | 90OHM |
| PEX_TX12* | PEX_TX12 | 2 | 90OHM |
| PEX_TX13 | PEX_TX13 | 2 | 90OHM |
| PEX_TX13* | PEX_TX13 | 2 | 90OHM |
| PEX_TX14 | PEX_TX14 | 2 | 90OHM |
| PEX_TX14* | PEX_TX14 | 2 | 90OHM |
| PEX_TX15 | PEX_TX15 | 2 | 90OHM |
| PEX_TX15* | PEX_TX15 | 2 | 90OHM |
| PEX_TX0 | PEX_TX0 | 2 | 90OHM |
| PEX_TX0* | PEX_TX0 | 2 | 90OHM |
| PEX_TX1 | PEX_TX1 | 2 | 90OHM |
| PEX_TX1* | PEX_TX1 | 2 | 90OHM |
| PEX_TX2 | PEX_TX2 | 2 | 90OHM |
| PEX_TX2* | PEX_TX2 | 2 | 90OHM |
| PEX_TX3 | PEX_TX3 | 2 | 90OHM |
| PEX_TX3* | PEX_TX3 | 2 | 90OHM |
| PEX_TX4 | PEX_TX4 | 2 | 90OHM |
| PEX_TX4* | PEX_TX4 | 2 | 90OHM |
| PEX_TX5 | PEX_TX5 | 2 | 90OHM |
| PEX_TX5* | PEX_TX5 | 2 | 90OHM |
| PEX_TX6 | PEX_TX6 | 2 | 90OHM |
| PEX_TX6* | PEX_TX6 | 2 | 90OHM |
| PEX_TX7 | PEX_TX7 | 2 | 90OHM |
| PEX_TX7* | PEX_TX7 | 2 | 90OHM |
| PEX_TX8 | PEX_TX8 | 2 | 90OHM |
| PEX_TX8* | PEX_TX8 | 2 | 90OHM |
| PEX_TX9 | PEX_TX9 | 2 | 90OHM |
| PEX_TX9* | PEX_TX9 | 2 | 90OHM |
| PEX_TX10 | PEX_TX10 | 2 | 90OHM |
| PEX_TX10* | PEX_TX10 | 2 | 90OHM |
| PEX_TX11 | PEX_TX11 | 2 | 90OHM |
| PEX_TX11* | PEX_TX11 | 2 | 90OHM |
| PEX_TX12 | PEX_TX12 | 2 | 90OHM |
| PEX_TX12* | PEX_TX12 | 2 | 90OHM |
| PEX_TX13 | PEX_TX13 | 2 | 90OHM |
| PEX_TX13* | PEX_TX13 | 2 | 90OHM |
| PEX_TX14 | PEX_TX14 | 2 | 90OHM |
| PEX_TX14* | PEX_TX14 | 2 | 90OHM |
| PEX_TX15 | PEX_TX15 | 2 | 90OHM |
| PEX_TX15* | PEX_TX15 | 2 | 90OHM |
| PEX_RX0 | PEX_RX0 | 2 | 90OHM |
| PEX_RX0* | PEX_RX0 | 2 | 90OHM |
| PEX_RX1 | PEX_RX1 | 2 | 90OHM |
| PEX_RX1* | PEX_RX1 | 2 | 90OHM |
| PEX_RX2 | PEX_RX2 | 2 | 90OHM |
| PEX_RX2* | PEX_RX2 | 2 | 90OHM |
| PEX_RX3 | PEX_RX3 | 2 | 90OHM |
| PEX_RX3* | PEX_RX3 | 2 | 90OHM |
| PEX_RX4 | PEX_RX4 | 2 | 90OHM |
| PEX_RX4* | PEX_RX4 | 2 | 90OHM |
| PEX_RX5 | PEX_RX5 | 2 | 90OHM |
| PEX_RX5* | PEX_RX5 | 2 | 90OHM |
| PEX_RX6 | PEX_RX6 | 2 | 90OHM |
| PEX_RX6* | PEX_RX6 | 2 | 90OHM |
| PEX_RX7 | PEX_RX7 | 2 | 90OHM |
| PEX_RX7* | PEX_RX7 | 2 | 90OHM |
| PEX_RX8 | PEX_RX8 | 2 | 90OHM |
| PEX_RX8* | PEX_RX8 | 2 | 90OHM |
| PEX_RX9 | PEX_RX9 | 2 | 90OHM |
| PEX_RX9* | PEX_RX9 | 2 | 90OHM |
| PEX_RX10 | PEX_RX10 | 2 | 90OHM |
| PEX_RX10* | PEX_RX10 | 2 | 90OHM |
| PEX_RX11 | PEX_RX11 | 2 | 90OHM |
| PEX_RX11* | PEX_RX11 | 2 | 90OHM |
| PEX_RX12 | PEX_RX12 | 2 | 90OHM |
| PEX_RX12* | PEX_RX12 | 2 | 90OHM |
| PEX_RX13 | PEX_RX13 | 2 | 90OHM |
| PEX_RX13* | PEX_RX13 | 2 | 90OHM |
| PEX_RX14 | PEX_RX14 | 2 | 90OHM |
| PEX_RX14* | PEX_RX14 | 2 | 90OHM |
| PEX_RX15 | PEX_RX15 | 2 | 90OHM |
| PEX_RX15* | PEX_RX15 | 2 | 90OHM |
| PEX_REFCLK | PEX_REFCLK | 2 | 90OHM |
| PEX_REFCLK* | PEX_REFCLK | 2 | 90OHM |

| Net Name | MIN_WIDTH | VOLTAGE | MAX_CURRENT |
|---|---|---|---|
| PEX_PRSNT* | 12MIL | | |
| PEX_TERMP | 12MIL | | |
| GPU_TESTMODE | 12MIL | | |
| PEX_PLLVDD | 12MIL | 1.05V | 0.145A |

| | |
|---|---|
| ASSEMBLY | BASE LEVEL GENERIC SCHEMATIC ONLY, COMMON & NO_STUFF ASSEMBLY NOTES AND BOM NOT FINAL |
| PAGE DETAIL | PCI Express Interface |


ALL NVIDIA DESIGN SPECIFICATIONS, REFERENCE SPECIFICATIONS, REFERENCE BOARDS, FILES, DRAWINGS, DIAGNOSTICS, LISTS AND OTHER DOCUMENTS OR INFORMATION (TOGETHER AND SEPARATELY, 'MATERIALS') ARE BEING PROVIDED 'AS IS'. THE MATERIALS MAY CONTAIN KNOWN AND UNKNOWN VIOLATIONS OR DEVIATIONS OF INDUSTRY STANDARDS AND SPECIFICATIONS. NVIDIA MAKES NO WARRANTIES, EXPRESSED, IMPLIED, STATUTORY OR OTHERWISE WITH RESPECT TO THE MATERIALS OR OTHERWISE, AND EXPRESSLY DISCLAIMS ALL IMPLIED WARRANTIES INCLUDING, WITHOUT LIMITATION, THE WARRANTIES OF DESIGN, OF NONINFRINGEMENT, MERCHANTABILITY OR FITNESS FOR A PARTICULAR PURPOSE, OR ARISING FROM A COURSE OF DEALING, TRADE USAGE, TRADE PRACTICE, OR INDUSTRY STANDARDS.



NVIDIA CORPORATION
2701 SAN TOMAS EXPRESSWAY
SANTA CLARA, CA 95050, USA


| | | | |
|---|---|---|---|
| NV_PN | 600-11071-BASE-SCH | | |
| PCB REV | P1071-A01 | PAGE | |
| BOM REV | A | DATE | 01-APR-2010 |


600209860 MSI COMPUTER CORP. CONFIDENTIAL FOR MSI INTERNAL USE ONLY 微星(C)2011 P1080501

# GPU Frame Buffer

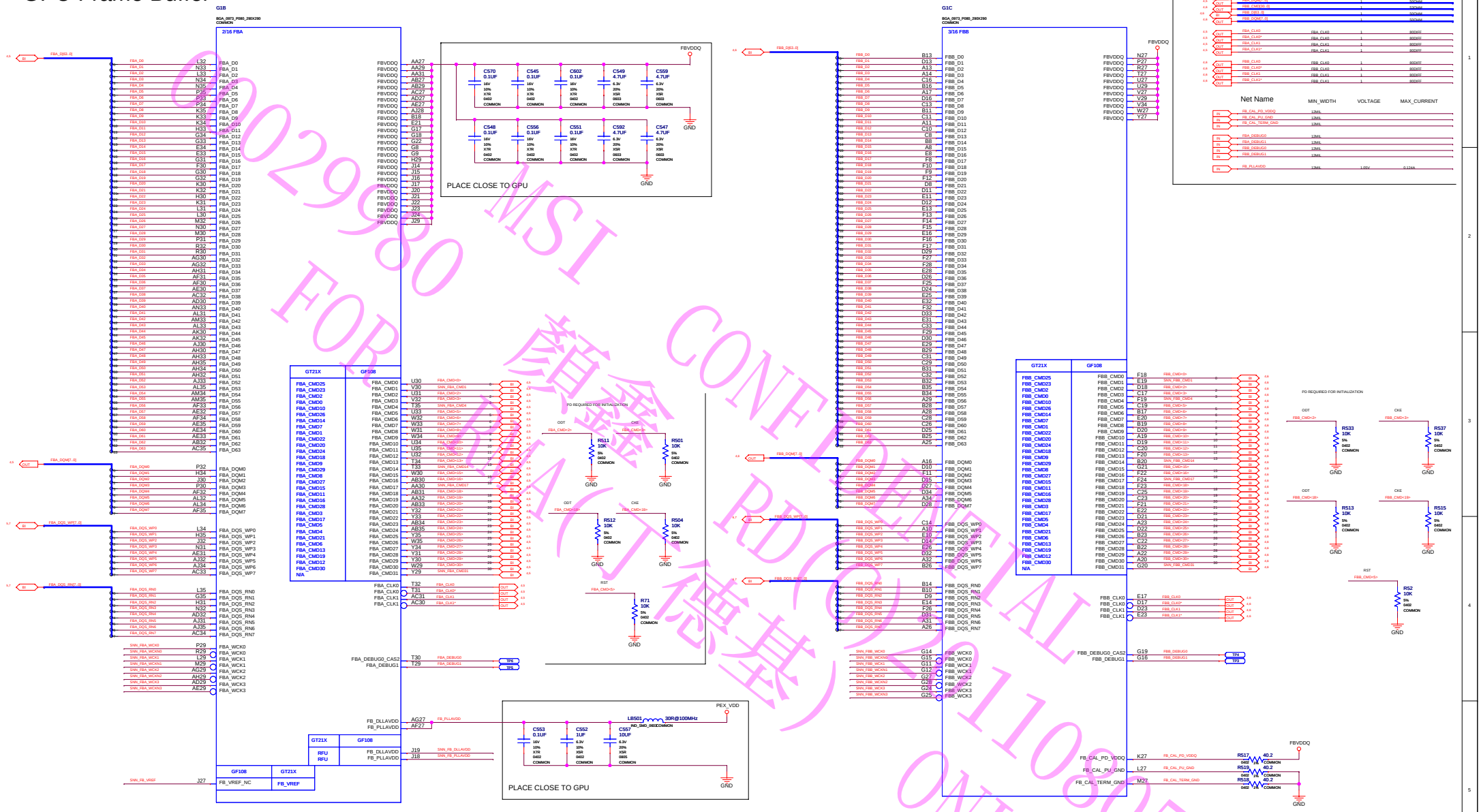



002980 MSI 微星 CONFIDENTIAL FOR R&D (入厂稳基) 1108050001 ONLY


| | |
|---|---|
| ASSEMBLY | BASE LEVEL GENERIC SCHEMATIC ONLY, COMMON & NO_STUFF ASSEMBLY NOTES AND BOM NOT FINAL |
| PAGE DETAIL | GPU Frame Buffer |


ALL NVIDIA DESIGN SPECIFICATIONS, REFERENCE SPECIFICATIONS, REFERENCE BOARDS, FILES, DRAWINGS, DIAGNOSTICS, LISTS AND OTHER DOCUMENTS OR INFORMATION (TOGETHER AND SEPARATELY, 'MATERIALS') ARE BEING PROVIDED 'AS IS'. THE MATERIALS MAY CONTAIN KNOWN AND UNKNOWN VIOLATIONS OR DEVIATIONS OF INDUSTRY STANDARDS AND SPECIFICATIONS. NVIDIA MAKES NO WARRANTIES, EXPRESSED, IMPLIED, STATUTORY OR OTHERWISE WITH RESPECT TO THE MATERIALS OR OTHERWISE, AND EXPRESSLY DISCLAIMS ALL IMPLIED WARRANTIES INCLUDING, WITHOUT LIMITATION, THE WARRANTIES OF DESIGN, OF NONINFRINGEMENT, MERCHANTABILITY OR FITNESS FOR A PARTICULAR PURPOSE, OR ARISING FROM A COURSE OF DEALING, TRADE USAGE, TRADE PRACTICE, OR INDUSTRY STANDARDS.



NVIDIA CORPORATION
2701 SAN TOMAS EXPRESSWAY
SANTA CLARA, CA 95050, USA


| | | | |
|---|---|---|---|
| NV_PN | 600-11071-BASE-SCH | | |
| PCB REV | P1071-A01 | PAGE | |
| BOM REV | A | DATE | 01-APR-2010 |

# FBA Partition

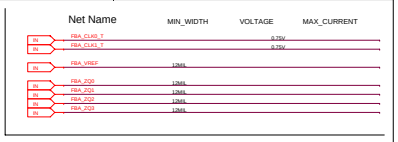

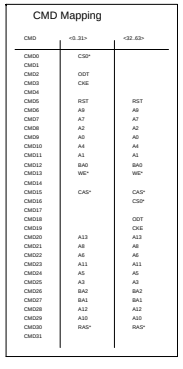


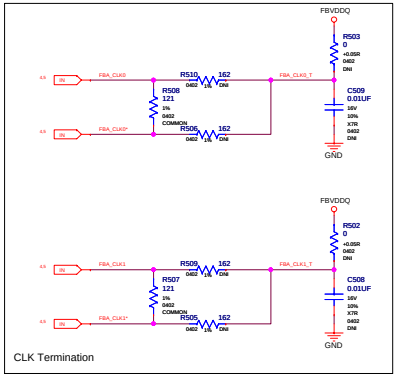


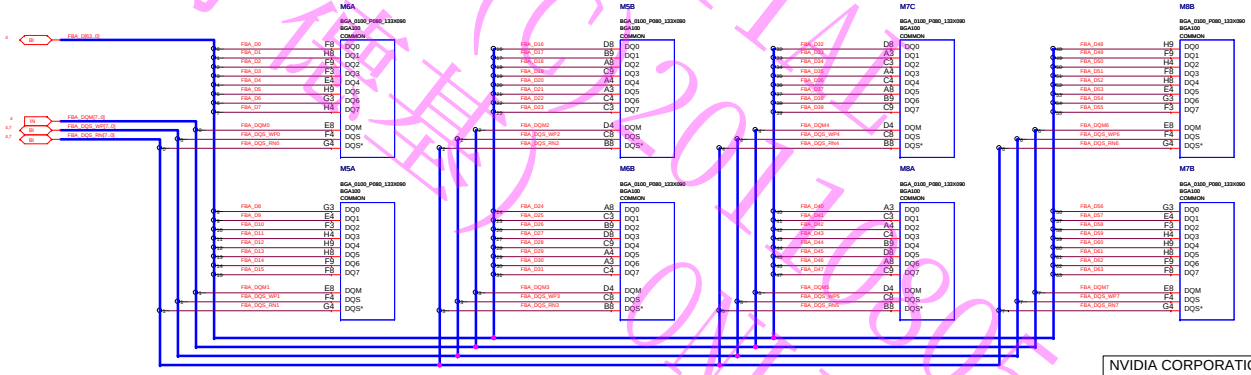


| | |
|---|---|
| ASSEMBLY | BASE LEVEL GENERIC SCHEMATIC ONLY, COMMON & NO_STUFF ASSEMBLY NOTES AND BOM NOT FINAL |
| PAGE DETAIL | FBA Partition |

ALL NVIDIA DESIGN SPECIFICATIONS, REFERENCE SPECIFICATIONS, REFERENCE BOARDS, FILES, DRAWINGS, DIAGNOSTICS, LISTS AND OTHER DOCUMENTS OR INFORMATION (TOGETHER AND SEPARATELY, 'MATERIALS') ARE BEING PROVIDED 'AS IS'. THE MATERIALS MAY CONTAIN KNOWN AND UNKNOWN VIOLATIONS OR DEVIATIONS OF INDUSTRY STANDARDS AND SPECIFICATIONS. NVIDIA MAKES NO WARRANTIES, EXPRESSED, IMPLIED, STATUTORY OR OTHERWISE WITH RESPECT TO THE MATERIALS OR OTHERWISE, AND EXPRESSLY DISCLAIMS ALL IMPLIED WARRANTIES INCLUDING, WITHOUT LIMITATION, THE WARRANTIES OF DESIGN, OF NONINFRINGEMENT, MERCHANTABILITY OR FITNESS FOR A PARTICULAR PURPOSE, OR ARISING FROM A COURSE OF DEALING, TRADE USAGE, TRADE PRACTICE, OR INDUSTRY STANDARDS.

NVIDIA CORPORATION
2701 SAN TOMAS EXPRESSWAY
SANTA CLARA, CA 95050, USA

| | | | |
|---|---|---|---|
| NV_PN | 600-11071-BASE-SCH | | |
| PCB REV | P1071-A01 | PAGE | |
| BOM REV | A | DATE | 01-APR-2010 |

0902080 MSI 微星 CONFIDENTIAL FOR RMA 下載 RD CONFIDENTIAL ONLY

# FBB Partition

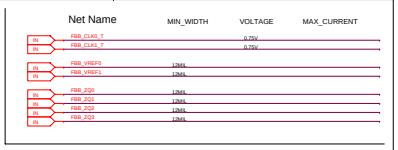

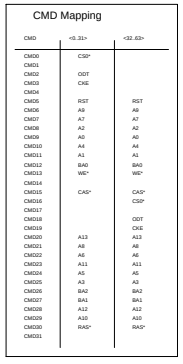


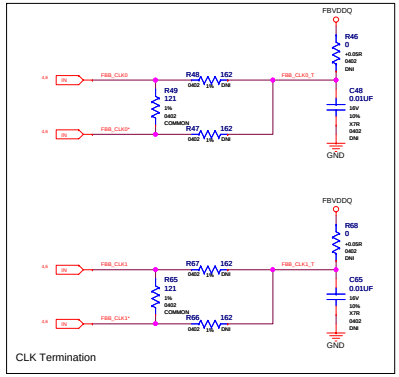


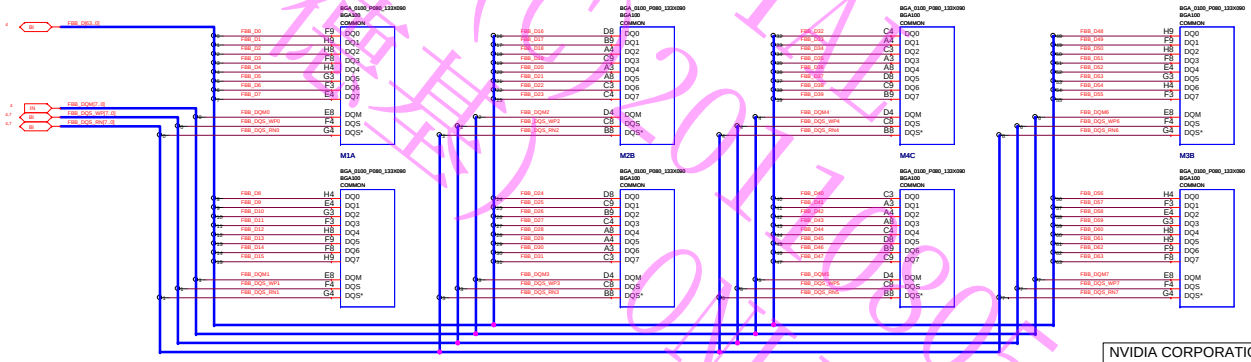


| | |
|---|---|
| ASSEMBLY | BASE LEVEL GENERIC SCHEMATIC ONLY, COMMON & NO_STUFF ASSEMBLY NOTES AND BOM NOT FINAL |
| PAGE DETAIL | FBB Partition |

ALL NVIDIA DESIGN SPECIFICATIONS, REFERENCE SPECIFICATIONS, REFERENCE BOARDS, FILES, DRAWINGS, DIAGNOSTICS, LISTS AND OTHER DOCUMENTS OR INFORMATION (TOGETHER AND SEPARATELY, 'MATERIALS') ARE BEING PROVIDED 'AS IS'. THE MATERIALS MAY CONTAIN KNOWN AND UNKNOWN VIOLATIONS OR DEVIATIONS OF INDUSTRY STANDARDS AND SPECIFICATIONS. NVIDIA MAKES NO WARRANTIES, EXPRESSED, IMPLIED, STATUTORY OR OTHERWISE WITH RESPECT TO THE MATERIALS OR OTHERWISE, AND EXPRESSLY DISCLAIMS ALL IMPLIED WARRANTIES INCLUDING, WITHOUT LIMITATION, THE WARRANTIES OF DESIGN, OF NONINFRINGEMENT, MERCHANTABILITY OR FITNESS FOR A PARTICULAR PURPOSE, OR ARISING FROM A COURSE OF DEALING, TRADE USAGE, TRADE PRACTICE, OR INDUSTRY STANDARDS.

NVIDIA CORPORATION
2701 SAN TOMAS EXPRESSWAY
SANTA CLARA, CA 95050, USA

| | | | |
|---|---|---|---|
| NV_PN | 600-11071-BASE-SCH | | |
| PCB REV | P1071-A01 | PAGE | |
| BOM REV | A | DATE | 01-APR-2010 |

0902080 MSI 技嘉 CONFIDENTIAL FOR RMA 不得外流 ONLY

# Memory Decoupling

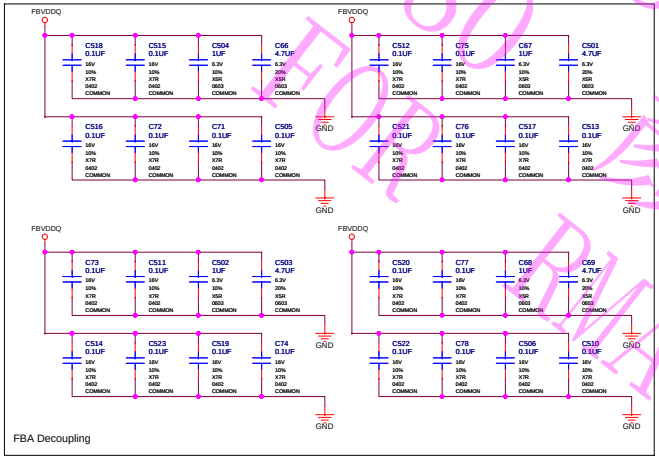


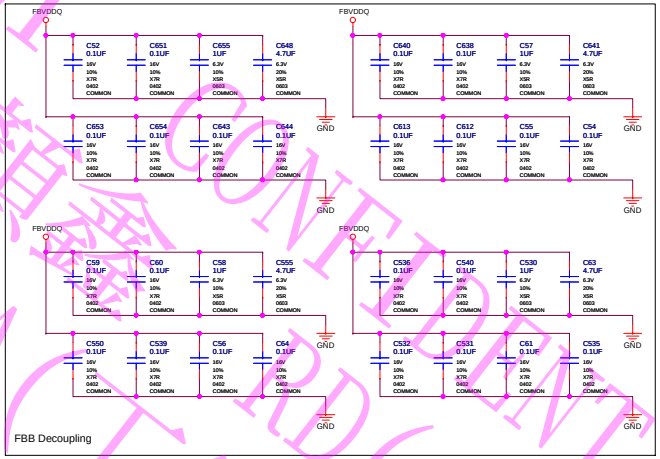



MSI CONFIDENTIAL
FOR PMA(丁德基) ONLY
00029980 (C)20110805001


| | |
|---|---|
| ASSEMBLY | BASE LEVEL GENERIC SCHEMATIC ONLY, COMMON & NO_STUFF ASSEMBLY NOTES AND BOM NOT FINAL |
| PAGE DETAIL | Memory Decoupling |


ALL NVIDIA DESIGN SPECIFICATIONS, REFERENCE SPECIFICATIONS, REFERENCE BOARDS, FILES, DRAWINGS, DIAGNOSTICS, LISTS AND OTHER DOCUMENTS OR INFORMATION (TOGETHER AND SEPARATELY, 'MATERIALS') ARE BEING PROVIDED 'AS IS'. THE MATERIALS MAY CONTAIN KNOWN AND UNKNOWN VIOLATIONS OR DEVIATIONS OF INDUSTRY STANDARDS AND SPECIFICATIONS. NVIDIA MAKES NO WARRANTIES, EXPRESSED, IMPLIED, STATUTORY OR OTHERWISE WITH RESPECT TO THE MATERIALS OR OTHERWISE, AND EXPRESSLY DISCLAIMS ALL IMPLIED WARRANTIES INCLUDING, WITHOUT LIMITATION, THE WARRANTIES OF DESIGN, OF NONINFRINGEMENT, MERCHANTABILITY OR FITNESS FOR A PARTICULAR PURPOSE, OR ARISING FROM A COURSE OF DEALING, TRADE USAGE, TRADE PRACTICE, OR INDUSTRY STANDARDS.



NVIDIA CORPORATION
2701 SAN TOMAS EXPRESSWAY
SANTA CLARA, CA 95050, USA


| | | | |
|---|---|---|---|
| NV_PN | 600-11071-BASE-SCH | | |
| PCB REV | P1071-A01 | PAGE | |
| BOM REV | A | DATE | 01-APR-2010 |

# DACA VGA

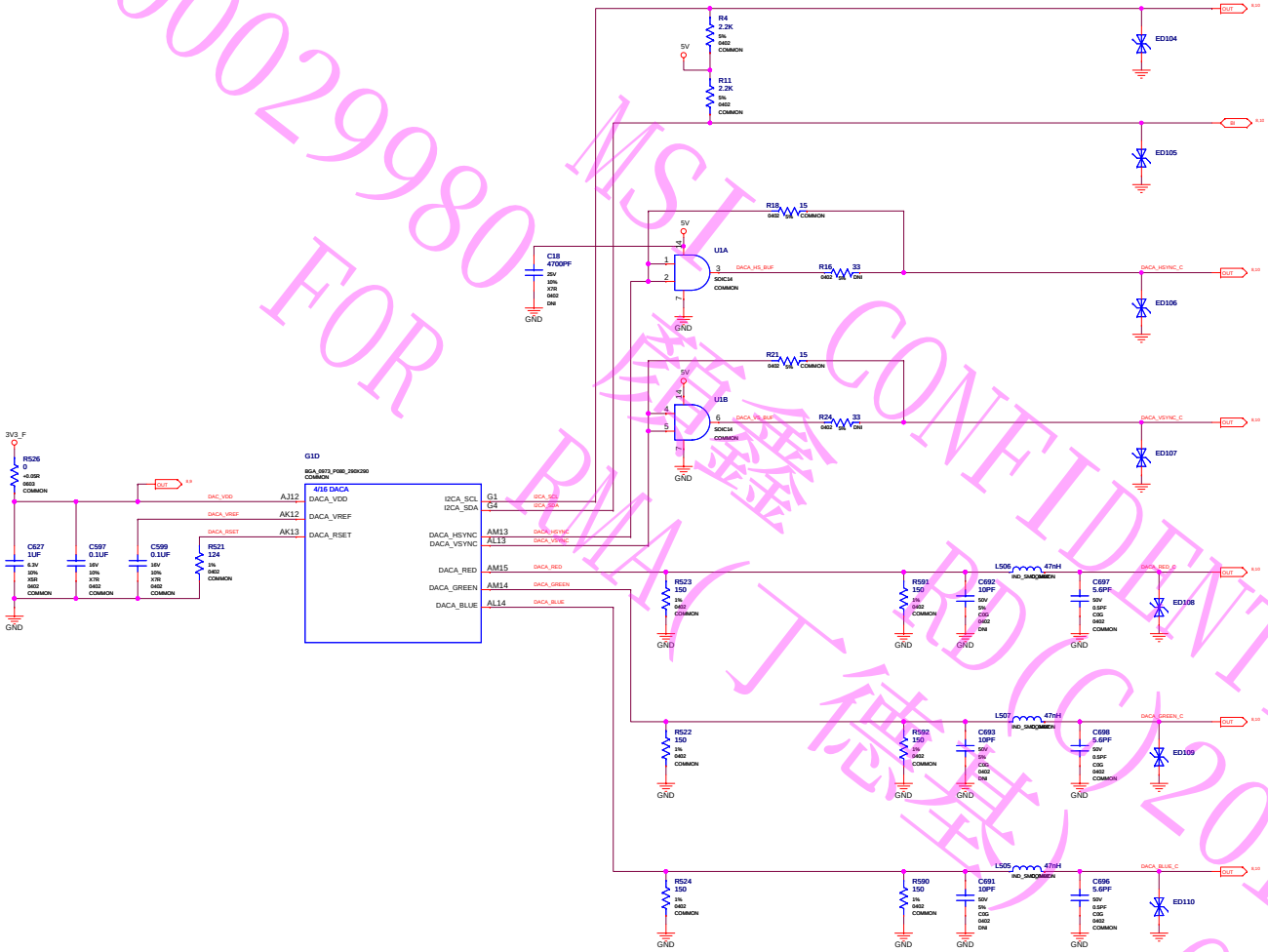


| Net Name | DIFF_PAIR | CRITICAL | IMPEDANCE |
|---|---|---|---|
| DACA_RED | | 1 | 50OHM |
| DACA_RED_C | | 1 | 50OHM |
| DACA_GREEN | | 1 | 50OHM |
| DACA_GREEN_C | | 1 | 50OHM |
| DACA_BLUE | | 1 | 50OHM |
| DACA_BLUE_C | | 1 | 50OHM |
| DACA_HSYNC | | 2 | 50OHM |
| DACA_HS_BUF | | 2 | 50OHM |
| DACA_HSYNC_C | | 2 | 50OHM |
| DACA_VSYNC | | 2 | 50OHM |
| DACA_VS_BUF | | 2 | 50OHM |
| DACA_VSYNC_C | | 2 | 50OHM |

| Net Name | MIN_WIDTH | VOLTAGE | MAX_CURRENT |
|---|---|---|---|
| I2CA_SCL | | | |
| I2CA_SDA | | | |
| DAC_VDD | 12MIL | | |
| DACA_VREF | 12MIL | | |
| DACA_RSET | 12MIL | | |


MSI CONFIDENTIAL
RD(C)20110805001
ONLY


| | |
|---|---|
| ASSEMBLY | BASE LEVEL GENERIC SCHEMATIC ONLY, COMMON & NO_STUFF ASSEMBLY NOTES AND BOM NOT FINAL |
| PAGE DETAIL | DACA VGA |


ALL NVIDIA DESIGN SPECIFICATIONS, REFERENCE SPECIFICATIONS, REFERENCE BOARDS, FILES, DRAWINGS, DIAGNOSTICS, LISTS AND OTHER DOCUMENTS OR INFORMATION (TOGETHER AND SEPARATELY, 'MATERIALS') ARE BEING PROVIDED 'AS IS'. THE MATERIALS MAY CONTAIN KNOWN AND UNKNOWN VIOLATIONS OR DEVIATIONS OF INDUSTRY STANDARDS AND SPECIFICATIONS. NVIDIA MAKES NO WARRANTIES, EXPRESSED, IMPLIED, STATUTORY OR OTHERWISE WITH RESPECT TO THE MATERIALS OR OTHERWISE, AND EXPRESSLY DISCLAIMS ALL IMPLIED WARRANTIES INCLUDING, WITHOUT LIMITATION, THE WARRANTIES OF DESIGN, OF NONINFRINGEMENT, MERCHANTABILITY OR FITNESS FOR A PARTICULAR PURPOSE, OR ARISING FROM A COURSE OF DEALING, TRADE USAGE, TRADE PRACTICE, OR INDUSTRY STANDARDS.



NVIDIA CORPORATION
2701 SAN TOMAS EXPRESSWAY
SANTA CLARA, CA 95050, USA


| | | | |
|---|---|---|---|
| NV_PN | 600-11071-BASE-SCH | | |
| PCB REV | P1071-A01 | PAGE | |
| BOM REV | A | DATE | 01-APR-2010 |

# DACB VGA Header

| Net Name | DIFF_PAIR | CRITICAL | IMPEDANCE |
|---|---|---|---|
| DACB_RED | | 1 | 50OHM |
| DACB_RED_C | | 1 | 50OHM |
| DACB_GREEN | | 1 | 50OHM |
| DACB_GREEN_C | | 1 | 50OHM |
| DACB_BLUE | | 1 | 50OHM |
| DACB_BLUE_C | | 1 | 50OHM |
| DACB_HSYNC | | 2 | 50OHM |
| DACB_HS_BUF | | 2 | 50OHM |
| DACB_HSYNC_C | | 2 | 50OHM |
| DACB_VSYNC | | 2 | 50OHM |
| DACB_VS_BUF | | 2 | 50OHM |
| DACB_VSYNC_C | | 2 | 50OHM |

| Net Name | MIN_WIDTH | VOLTAGE | MAX_CURRENT |
|---|---|---|---|
| I2CB_SCL | | | |
| I2CB_SDA | | | |
| DACB_VREF | 12MIL | | |
| DACB_RSET | 12MIL | | |

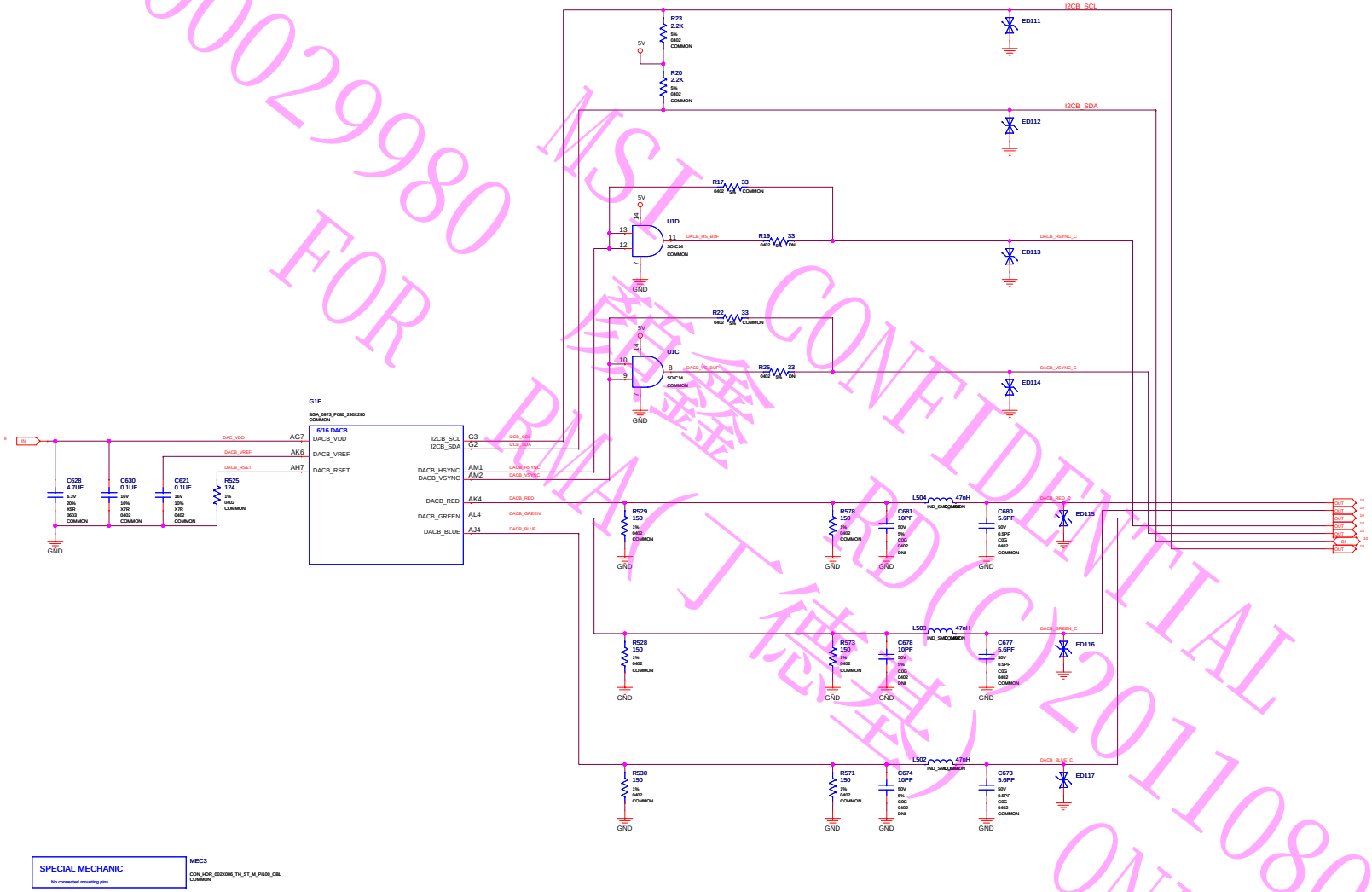


SPECIAL MECHANIC
No connected mounting pins

MEC3
CON_HDR_002X006_TH_ST_M_P0100_CBL COMMON

| | |
|---|---|
| ASSEMBLY | BASE LEVEL GENERIC SCHEMATIC ONLY, COMMON & NO_STUFF ASSEMBLY NOTES AND BOM NOT FINAL |
| PAGE DETAIL | DACB VGA Header |

ALL NVIDIA DESIGN SPECIFICATIONS, REFERENCE SPECIFICATIONS, REFERENCE BOARDS, FILES, DRAWINGS, DIAGNOSTICS, LISTS AND OTHER DOCUMENTS OR INFORMATION (TOGETHER AND SEPARATELY, 'MATERIALS') ARE BEING PROVIDED 'AS IS'. THE MATERIALS MAY CONTAIN KNOWN AND UNKNOWN VIOLATIONS OR DEVIATIONS OF INDUSTRY STANDARDS AND SPECIFICATIONS. NVIDIA MAKES NO WARRANTIES, EXPRESSED, IMPLIED, STATUTORY OR OTHERWISE WITH RESPECT TO THE MATERIALS OR OTHERWISE, AND EXPRESSLY DISCLAIMS ALL IMPLIED WARRANTIES INCLUDING, WITHOUT LIMITATION, THE WARRANTIES OF DESIGN, OF NONINFRINGEMENT, MERCHANTABILITY OR FITNESS FOR A PARTICULAR PURPOSE, OR ARISING FROM A COURSE OF DEALING, TRADE USAGE, TRADE PRACTICE, OR INDUSTRY STANDARDS.

NVIDIA CORPORATION
2701 SAN TOMAS EXPRESSWAY
SANTA CLARA, CA 95050, USA

| | | | |
|---|---|---|---|
| NV_PN | 600-11071-BASE-SCH | | |
| PCB REV | P1071-A01 | PAGE | |
| BOM REV | A | DATE | 01-APR-2010 |

00029980 FOR RMA (J 德生) ONLY
MSI CONFIDENTIAL 客户 RD (C) 20110805001

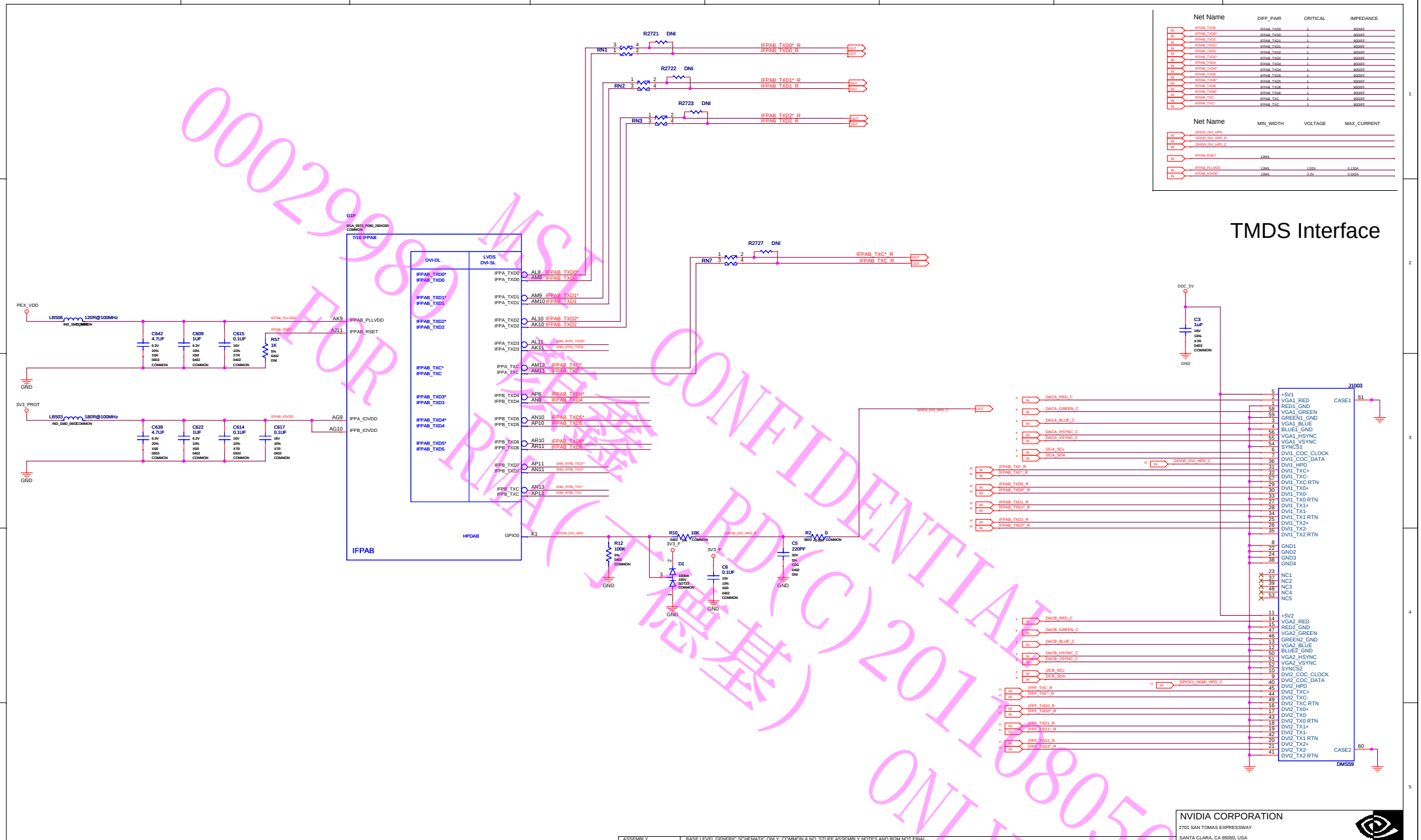


| | |
|---|---|
| ASSEMBLY | BASE LEVEL GENERIC SCHEMATIC ONLY, COMMON & NO_STUFF ASSEMBLY NOTES AND BOM NOT FINAL |
| PAGE DETAIL | TMDS Interface |

ALL NVIDIA DESIGN SPECIFICATIONS, REFERENCE SPECIFICATIONS, REFERENCE BOARDS, FILES, DRAWINGS, DIAGNOSTICS, LISTS AND OTHER DOCUMENTS OR INFORMATION (TOGETHER AND SEPARATELY, 'MATERIALS') ARE BEING PROVIDED 'AS IS'. THE MATERIALS MAY CONTAIN KNOWN AND UNKNOWN VIOLATIONS OR DEVIATIONS OF INDUSTRY STANDARDS AND SPECIFICATIONS. NVIDIA MAKES NO WARRANTIES, EXPRESSED, IMPLIED, STATUTORY OR OTHERWISE WITH RESPECT TO THE MATERIALS OR OTHERWISE, AND EXPRESSLY DISCLAIMS ALL IMPLIED WARRANTIES INCLUDING, WITHOUT LIMITATION, THE WARRANTIES OF DESIGN, OF NONINFRINGEMENT, MERCHANTABILITY OR FITNESS FOR A PARTICULAR PURPOSE, OR ARISING FROM A COURSE OF DEALING, TRADE USAGE, TRADE PRACTICE, OR INDUSTRY STANDARDS.

NVIDIA CORPORATION
2701 SAN TOMAS EXPRESSWAY
SANTA CLARA, CA 95050, USA

| | | | |
|---|---|---|---|
| NV_PN | 600-11071-BASE-SCH | | |
| PCB REV | P1071-A01 | PAGE | |
| BOM REV | A | DATE | 01-APR-2010 |

000299980 FOR MSI 微轉 RD(C)20110805001 CONFIDENTIAL (RMA 德基) ONLY

# HDMI Interface

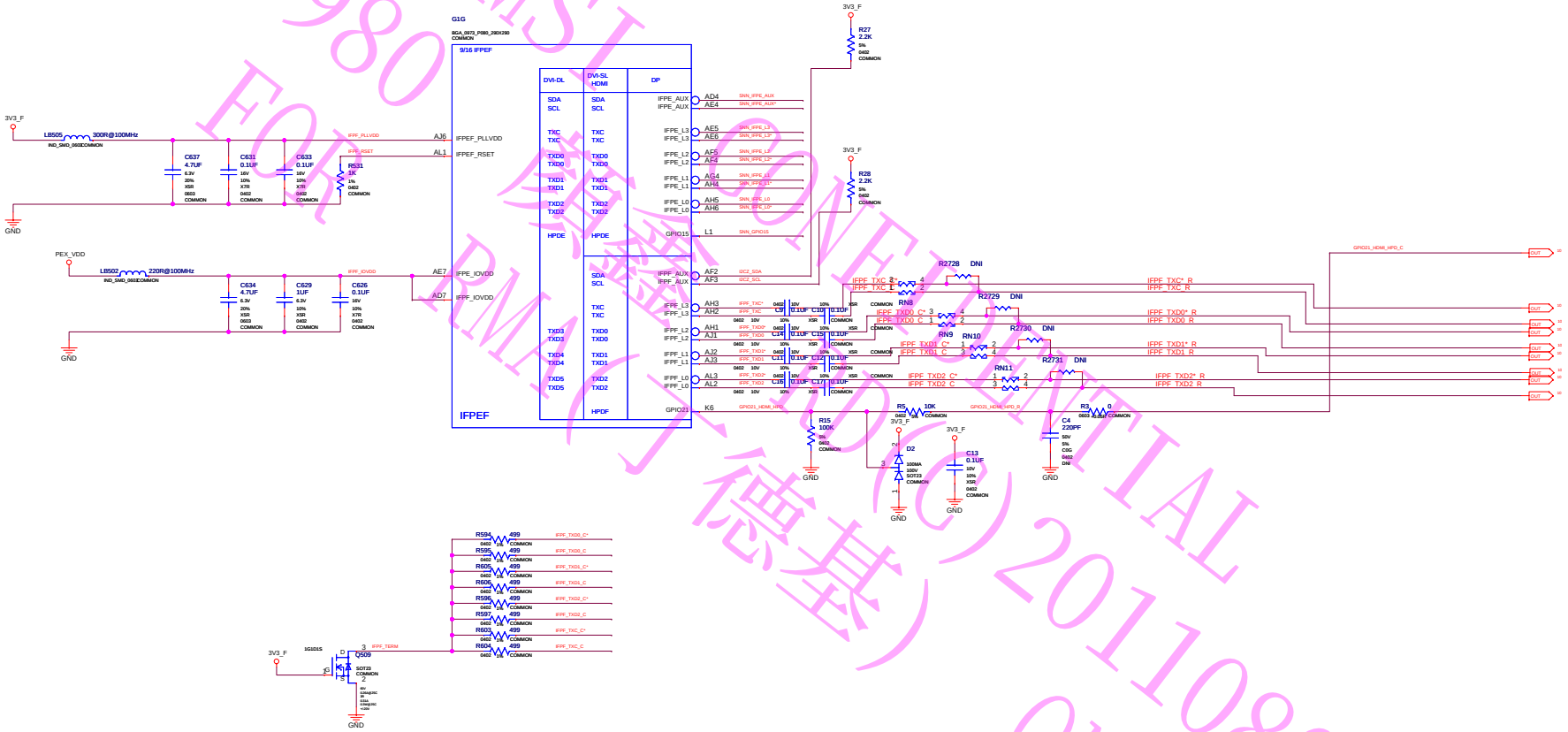


| Net Name | DIFF_PAIR | CRITICAL | IMPEDANCE |
|---|---|---|---|
| IFPE_TXD0 | IFPE_TXD0 | 1 | 95OHM |
| IFPE_TXD0* | IFPE_TXD0 | 1 | 95OHM |
| IFPE_TXD1 | IFPE_TXD1 | 1 | 95OHM |
| IFPE_TXD1* | IFPE_TXD1 | 1 | 95OHM |
| IFPE_TXD2 | IFPE_TXD2 | 1 | 95OHM |
| IFPE_TXD2* | IFPE_TXD2 | 1 | 95OHM |
| IFPE_TXC | IFPE_TXC | 1 | 95OHM |
| IFPE_TXC* | IFPE_TXC | 1 | 95OHM |
| IFPE_TXD0_C | IFPE_TXD0_C | 1 | 95OHM |
| IFPE_TXD0_C* | IFPE_TXD0_C | 1 | 95OHM |
| IFPE_TXD1_C | IFPE_TXD1_C | 1 | 95OHM |
| IFPE_TXD1_C* | IFPE_TXD1_C | 1 | 95OHM |
| IFPE_TXD2_C | IFPE_TXD2_C | 1 | 95OHM |
| IFPE_TXD2_C* | IFPE_TXD2_C | 1 | 95OHM |
| IFPE_TXC_C | IFPE_TXC_C | 1 | 95OHM |
| IFPE_TXC_C* | IFPE_TXC_C | 1 | 95OHM |

| Net Name | MIN_WIDTH | VOLTAGE | MAX_CURRENT |
|---|---|---|---|
| I2C2_SDA | | | |
| I2C2_SCL | | | |
| I2C2_SDA_C | | | |
| I2C2_SCL_C | | | |
| GPIO21_HDMI_HPD | | | |
| GPIO21_HDMI_HPD_R | | | |
| GPIO21_HDMI_HPD_C | | | |
| IFPE_TERM | 12MIL | 0V | |
| IFPE_RSET | 12MIL | | |
| IFPE_PLLVDD | 12MIL | 3.3V | 0.085A |
| IFPE_IOVDD | 12MIL | 1.05V | 0.105A |

| | |
|---|---|
| ASSEMBLY | BASE LEVEL GENERIC SCHEMATIC ONLY, COMMON & NO_STUFF ASSEMBLY NOTES AND BOM NOT FINAL |
| PAGE DETAIL | HDMI Interface |

ALL NVIDIA DESIGN SPECIFICATIONS, REFERENCE SPECIFICATIONS, REFERENCE BOARDS, FILES, DRAWINGS, DIAGNOSTICS, LISTS AND OTHER DOCUMENTS OR INFORMATION (TOGETHER AND SEPARATELY, 'MATERIALS') ARE BEING PROVIDED 'AS IS'. THE MATERIALS MAY CONTAIN KNOWN AND UNKNOWN VIOLATIONS OR DEVIATIONS OF INDUSTRY STANDARDS AND SPECIFICATIONS. NVIDIA MAKES NO WARRANTIES, EXPRESSED, IMPLIED, STATUTORY OR OTHERWISE WITH RESPECT TO THE MATERIALS OR OTHERWISE, AND EXPRESSLY DISCLAIMS ALL IMPLIED WARRANTIES INCLUDING, WITHOUT LIMITATION, THE WARRANTIES OF DESIGN, OF NONINFRINGEMENT, MERCHANTABILITY OR FITNESS FOR A PARTICULAR PURPOSE, OR ARISING FROM A COURSE OF DEALING, TRADE USAGE, TRADE PRACTICE, OR INDUSTRY STANDARDS.

NVIDIA CORPORATION
2701 SAN TOMAS EXPRESSWAY
SANTA CLARA, CA 95050, USA

| | | | |
|---|---|---|---|
| NV_PN | 600-11071-BASE-SCH | | |
| PCB REV | P1071-A01 | PAGE | |
| BOM REV | A | DATE | 01-APR-2010 |

0002998 MSI CONFIDENTIAL FOR 微星(广州)研发有限公司 ONLY

# Unused Interfaces, NVVDD Decoupling

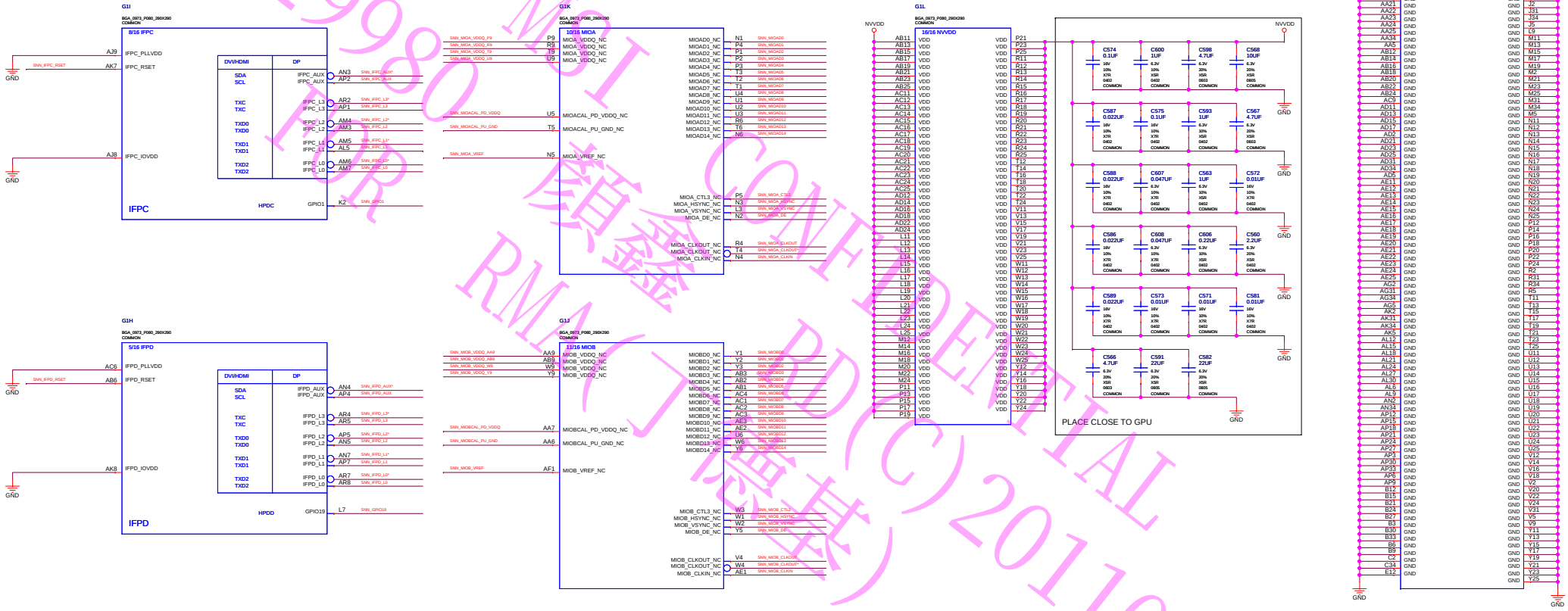


| | |
|---|---|
| ASSEMBLY | BASE LEVEL GENERIC SCHEMATIC ONLY, COMMON & NO_STUFF ASSEMBLY NOTES AND BOM NOT FINAL |
| PAGE DETAIL | Unused Interfaces, NVVDD Decoupling |


ALL NVIDIA DESIGN SPECIFICATIONS, REFERENCE SPECIFICATIONS, REFERENCE BOARDS, FILES, DRAWINGS, DIAGNOSTICS, LISTS AND OTHER DOCUMENTS OR INFORMATION (TOGETHER AND SEPARATELY, 'MATERIALS') ARE BEING PROVIDED 'AS IS'. THE MATERIALS MAY CONTAIN KNOWN AND UNKNOWN VIOLATIONS OR DEVIATIONS OF INDUSTRY STANDARDS AND SPECIFICATIONS. NVIDIA MAKES NO WARRANTIES, EXPRESSED, IMPLIED, STATUTORY OR OTHERWISE WITH RESPECT TO THE MATERIALS OR OTHERWISE, AND EXPRESSLY DISCLAIMS ALL IMPLIED WARRANTIES INCLUDING, WITHOUT LIMITATION, THE WARRANTIES OF DESIGN, OF NONINFRINGEMENT, MERCHANTABILITY OR FITNESS FOR A PARTICULAR PURPOSE, OR ARISING FROM A COURSE OF DEALING, TRADE USAGE, TRADE PRACTICE, OR INDUSTRY STANDARDS.



NVIDIA CORPORATION
2701 SAN TOMAS EXPRESSWAY
SANTA CLARA, CA 95050, USA


| | | | |
|---|---|---|---|
| NV_PN | 600-11071-BASE-SCH | | |
| PCB REV | P1071-A01 | PAGE | |
| BOM REV | A | DATE | 01-APR-2010 |


0002998 NOT FOR RMA 仅限售后 CONFIDENTIAL (C)2011080501 ONLY

# XTAL, ROM, JTAG, Misc

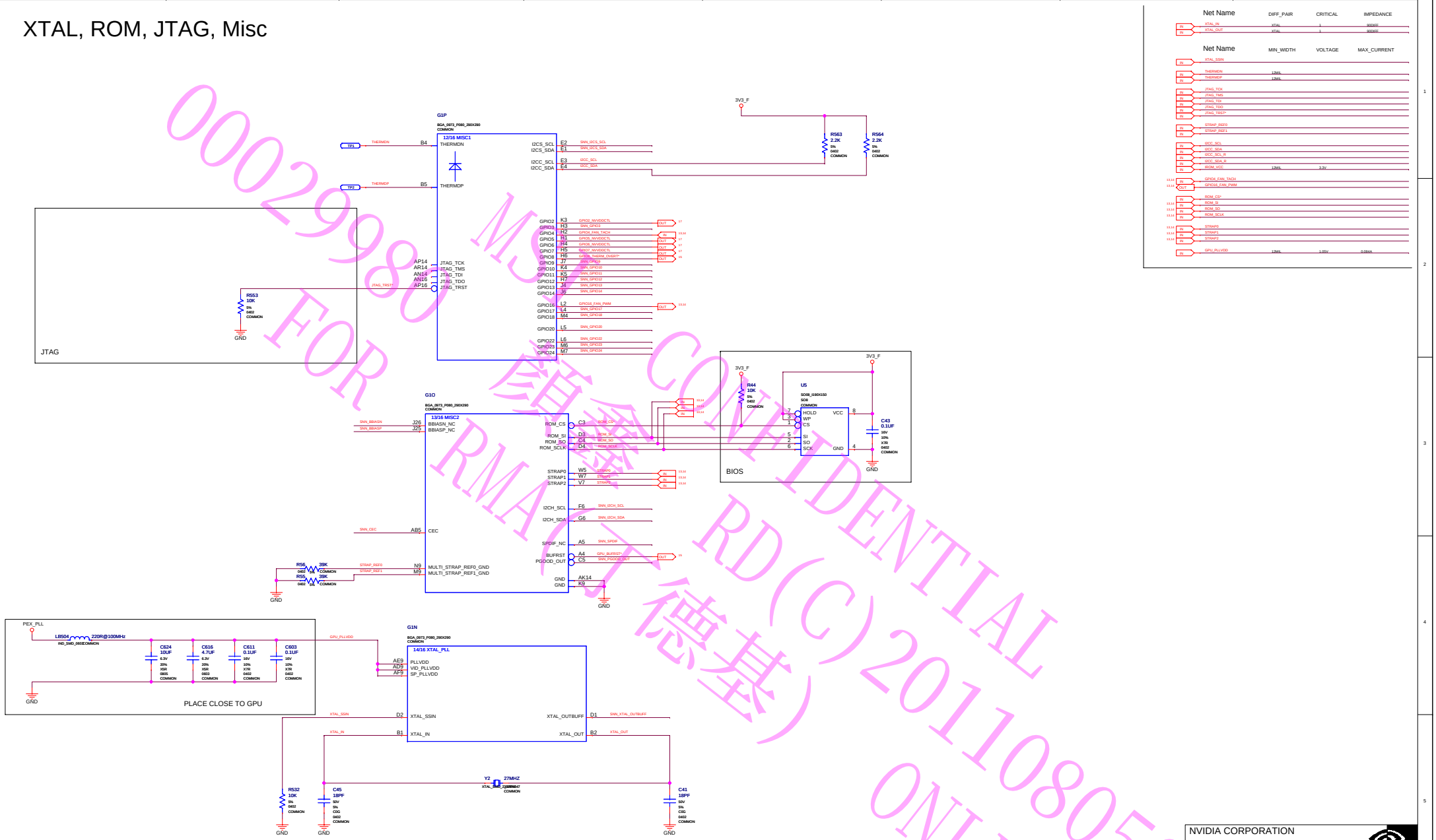


| | |
|---|---|
| ASSEMBLY | BASE LEVEL GENERIC SCHEMATIC ONLY, COMMON & NO_STUFF ASSEMBLY NOTES AND BOM NOT FINAL |
| PAGE DETAIL | XTAL, ROM, JTAG, Misc |

ALL NVIDIA DESIGN SPECIFICATIONS, REFERENCE SPECIFICATIONS, REFERENCE BOARDS, FILES, DRAWINGS, DIAGNOSTICS, LISTS AND OTHER DOCUMENTS OR INFORMATION (TOGETHER AND SEPARATELY, 'MATERIALS') ARE BEING PROVIDED 'AS IS'. THE MATERIALS MAY CONTAIN KNOWN AND UNKNOWN VIOLATIONS OR DEVIATIONS OF INDUSTRY STANDARDS AND SPECIFICATIONS. NVIDIA MAKES NO WARRANTIES, EXPRESSED, IMPLIED, STATUTORY OR OTHERWISE WITH RESPECT TO THE MATERIALS OR OTHERWISE, AND EXPRESSLY DISCLAIMS ALL IMPLIED WARRANTIES INCLUDING, WITHOUT LIMITATION, THE WARRANTIES OF DESIGN, OF NONINFRINGEMENT, MERCHANTABILITY OR FITNESS FOR A PARTICULAR PURPOSE, OR ARISING FROM A COURSE OF DEALING, TRADE USAGE, TRADE PRACTICE, OR INDUSTRY STANDARDS.

NVIDIA CORPORATION
2701 SAN TOMAS EXPRESSWAY
SANTA CLARA, CA 95050, USA

| | | | |
|---|---|---|---|
| NV_PN | 600-11071-BASE-SCH | | |
| PCB REV | P1071-A01 | PAGE | |
| BOM REV | A | DATE | 01-APR-2010 |

00029980 FOR RMA 德基 MSI 微星 CONFIDENTIAL RD(C)20110805001 ONLY

# Straps, Thermal, Mechanical

| Net Name | MIN_WIDTH | VOLTAGE | MAX_CURRENT |
|---|---|---|---|
| GPIO16_FAN_D | | | |
| GPIO16_FAN_ADJ | | | |
| GPIO16_FAN_C | | | |
| GPIO16_FAN_L | | | |

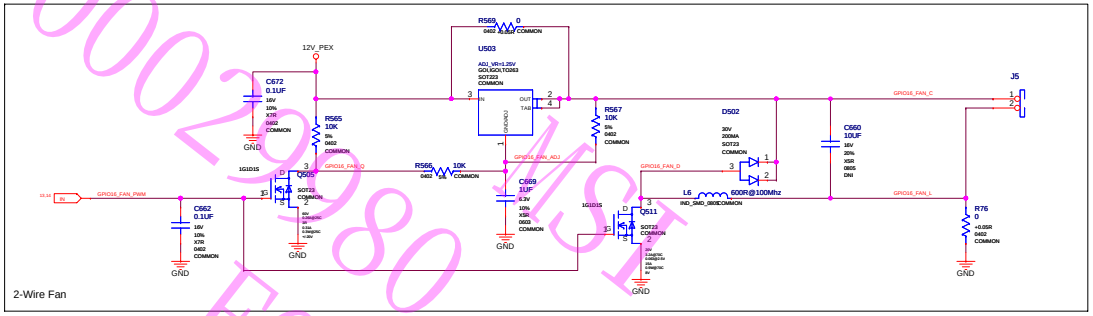


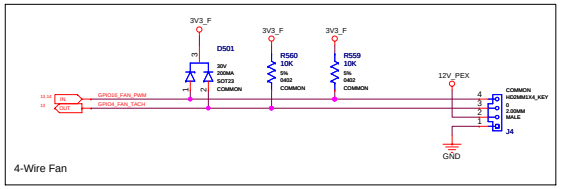


## GF108 Straps

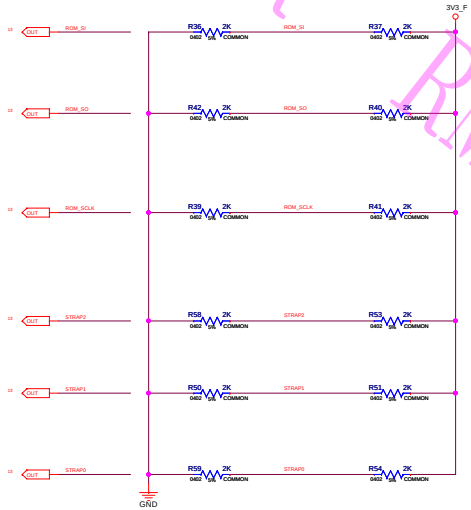


| Bit | Signal | Values | | | |
|---|---|---|---|---|---|
| 03: | RAMCFG[3] | 0000 | | | |
| 02: | RAMCFG[2] | 0001 | Micron | | |
| | | 0010 | Hynix | | |
| 01: | RAMCFG[1] | 0011 | Samsung | | |
| | | 0100 | | | |
| 00: | RAMCFG[0] | 0101 | | | |
| | | 0110 | | | |
| 02: | XCLK_417 | 0 | Disable | | |
| | | 1 | Enable | | |
| 02: | FB[0] | 0 | Default | | |
| 01: | SMB_ALT_ADDR | 0 | 0x9E | | |
| | | 1 | 0x6C | | |
| 00: | VGA_DEVICE | 0 | Disable | | |
| | | 1 | Enable | | |
| 03: | PCI_DEVID_EXT | 0 | GF108-300-A1 | | |
| | | 0 | GF108-200-A1 | | |
| 02: | SUB_VENDOR | 0 | No BIOS | | |
| | | 1 | BIOS | | |
| 01: | SLOT_CLK_CFG | 0 | Disable | | |
| | | 1 | Enable | | |
| 00: | PEX_PLL_EN_TERM100 | 0 | Disable | | |
| | | 1 | Enable | | |
| 03: | PCI_DEVID[3] | 0001 | GF108-300-A1 | | |
| | | 0010 | GF108-200-A1 | | |
| 02: | PCI_DEVID[2] | | | | |
| 01: | PCI_DEVID[1] | | | | |
| 00: | PCI_DEVID[0] | | | | |
| 03: | 3GIO_PADCFG_LUT_ADR[3] | 0000 | DSKTOP_DEFAULT | 1000 | DSKTOP_HTHRS |
| | | 0001 | MOBILE_DEFAULT | 1001 | MOBILE_HTHRS_HAMP |
| 02: | 3GIO_PADCFG_LUT_ADR[2] | 0010 | MOBILE_NTHRS_LLAMP | 1010 | MOBILE_HTHRS_LLAMP |
| | | 0011 | MOBILE_NTHRS_LAMP | 1011 | MOBILE_HTHRS_LAMP |
| 01: | 3GIO_PADCFG_LUT_ADR[1] | 0100 | MOBILE_NTHRS_HAMP | 1100 | MOBILE_HTHRS_HAMP |
| | | 0101 | MOBILE_NTHRS_HHAMP | 1101 | MOBILE_HTHRS_HHAMP |
| 00: | 3GIO_PADCFG_LUT_ADR[0] | 0110 | MOBILE_NTHRS_HHHAMP | 1110 | MOBILE_HTHRS_HHHAMP |
| | | 0111 | MOBILE_NTHRS_HHHHAMP | 1111 | MOBILE_HTHRS_HHHHAMP |
| 03: | USER[3] | 0000 | Default | | |
| 02: | USER[2] | | | | |
| 01: | USER[1] | | | | |
| 00: | USER[0] | | | | |

| Multilevel Straps | |
|---|---|
| 5K to GND | 0000 |
| 10K to GND | 0001 |
| 15K to GND | 0010 |
| 20K to GND | 0011 |
| 25K to GND | 0100 |
| 30K to GND | 0101 |
| 35K to GND | 0110 |
| 40K to GND | 0111 |
| 5K to VCC | 1000 |
| 10K to VCC | 1001 |
| 15K to VCC | 1010 |
| 20K to VCC | 1011 |
| 25K to VCC | 1100 |
| 30K to VCC | 1101 |
| 35K to VCC | 1110 |
| 40K to VCC | 1111 |

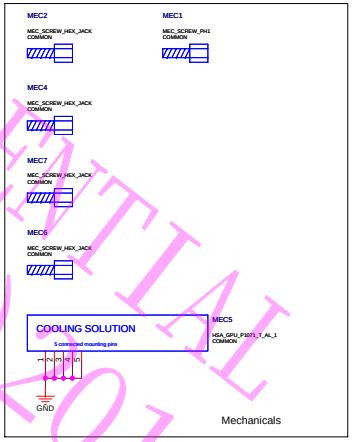


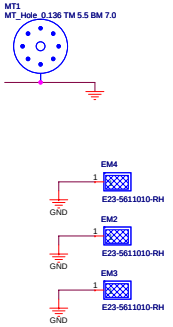


| | |
|---|---|
| ASSEMBLY | BASE LEVEL GENERIC SCHEMATIC ONLY, COMMON & NO_STUFF ASSEMBLY NOTES AND BOM NOT FINAL |
| PAGE DETAIL | Straps, Thermal, Mechanical |


ALL NVIDIA DESIGN SPECIFICATIONS, REFERENCE SPECIFICATIONS, REFERENCE BOARDS, FILES, DRAWINGS, DIAGNOSTICS, LISTS AND OTHER DOCUMENTS OR INFORMATION (TOGETHER AND SEPARATELY, 'MATERIALS') ARE BEING PROVIDED 'AS IS'. THE MATERIALS MAY CONTAIN KNOWN AND UNKNOWN VIOLATIONS OR DEVIATIONS OF INDUSTRY STANDARDS AND SPECIFICATIONS. NVIDIA MAKES NO WARRANTIES, EXPRESSED, IMPLIED, STATUTORY OR OTHERWISE WITH RESPECT TO THE MATERIALS OR OTHERWISE, AND EXPRESSLY DISCLAIMS ALL IMPLIED WARRANTIES INCLUDING, WITHOUT LIMITATION, THE WARRANTIES OF DESIGN, OF NONINFRINGEMENT, MERCHANTABILITY OR FITNESS FOR A PARTICULAR PURPOSE, OR ARISING FROM A COURSE OF DEALING, TRADE USAGE, TRADE PRACTICE, OR INDUSTRY STANDARDS.



NVIDIA CORPORATION
2701 SAN TOMAS EXPRESSWAY
SANTA CLARA, CA 95050, USA


| | | | |
|---|---|---|---|
| NV_PN | 600-11071-BASE-SCH | | |
| PCB REV | P1071-A01 | PAGE | |
| BOM REV | A | DATE | 01-APR-2010 |


0029980 MSI FOR RMA(C)2011080501 CONFIDENTIAL 微星(上海)ONLY

# Power Supply I: Misc Power, Thermal Shutdown

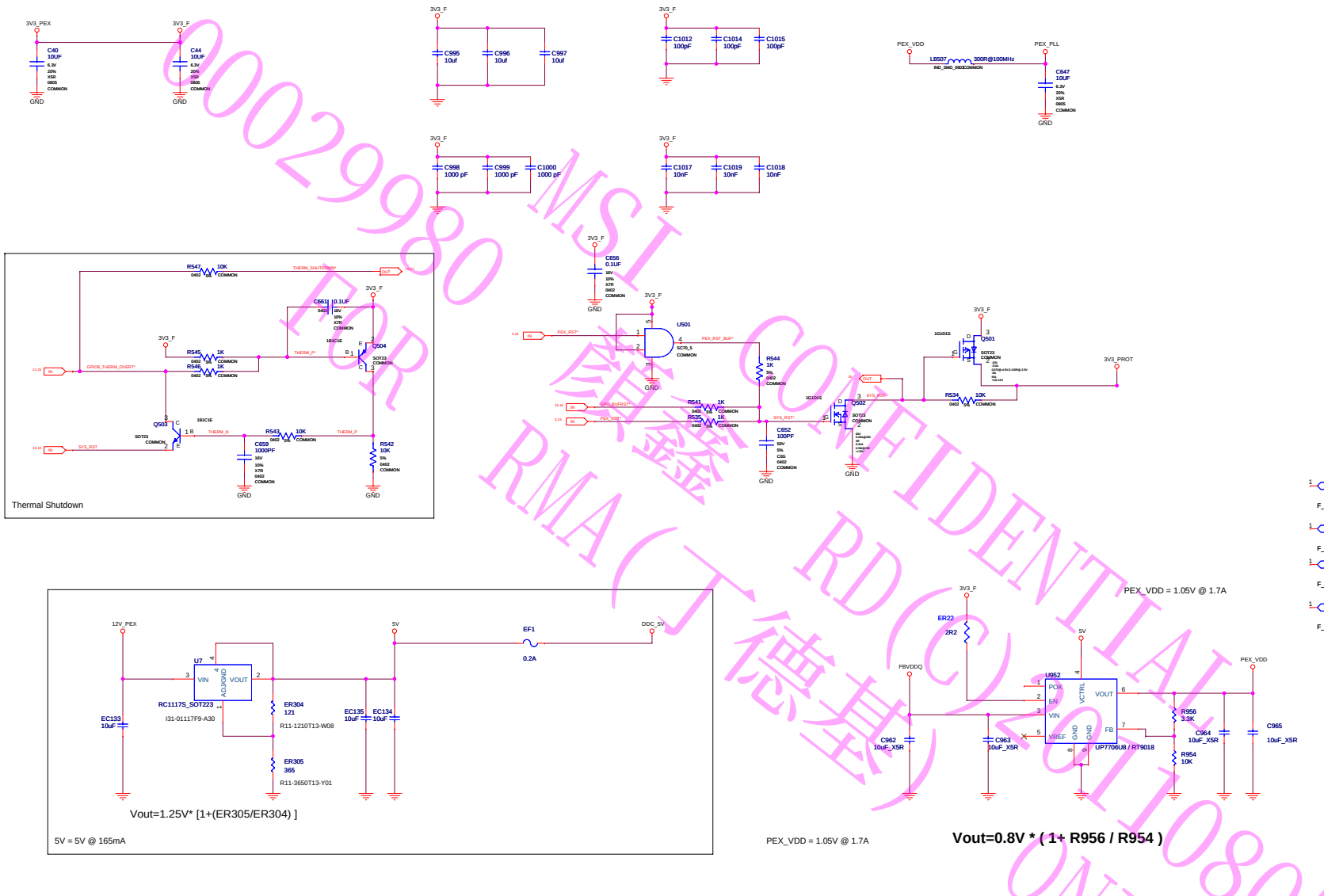


| Net Name | MIN_WIDTH | VOLTAGE | MAX_CURRENT |
|---|---|---|---|
| THERM_SHUTDOWN* | | | |
| GPIO8_THERM_OVERT* | | | |
| THERM_P* | | | |
| THERM_P | | | |
| THERM_N | | | |
| SYS_RST | | | |
| SYS_RST* | | | |
| PEX_RST* | | | |
| GPU_BUFRST* | | | |
| PEX_RST_BUF* | | | |
| PS_5V_BACKDRIVE | 12MIL | | |
| PS_5V_PROT | 12MIL | | |
| PS_PEXVDD_CNTL | 12MIL | | |
| PS_PEXVDD_FB | 12MIL | | |
| PEX_PLL | 12MIL | 1.05V | 0.353A |
| 3V3_F | 12MIL | 3.3V | 3A |
| 3V3_PROT | 12MIL | 3.3V | 0.320A |
| 5V | 12MIL | 5V | 0.165A |
| DDC_5V | 12MIL | 5V | 0.165A |
| PEX_VDD | 16MIL | 1.05V | 1.7A |

J15 X_PIN1*2 GND

Top
Single Ended_Memory CMD
6.6929 mil
40 ohm +/- 10%

J14 X_PIN1*2 GND

Int3
Single Ended_RGB
4.76377 mil
50 ohm +/- 10%

J9 X_PIN1*2 GND

Bottom
Single Ended_Memory Data
3.937 mil
53 ohm +/- 10%

FM1 SW_FB F_PAD_X
FM2 SW_FB F_PAD_X
FM3 SW_FB F_PAD_X
FM4 SW_FB F_PAD_X
FM5 SW_FB F_PAD_X
FM6 SW_FB F_PAD_X

J7 impedence GND GND

Top
Diffenential_PCIE BUS
3.94 / 4.72 mil
90 ohm +/- 10%

J8 impedence GND GND

Int3
Diffenential_DVI
3.94 / 5.98 mil
90 ohm +/- 10%

J12 impedence GND GND

Int3
Diffenential_Memory Clock
4.33 / 4.13 mil
80 ohm +/- 10%

J13 impedence GND GND

Bottom
Diffenential_PCIE BUS
3.94 / 4.72 mil
90 ohm +/- 10%

| | |
|---|---|
| ASSEMBLY | BASE LEVEL GENERIC SCHEMATIC ONLY, COMMON & NO_STUFF ASSEMBLY NOTES AND BOM NOT FINAL |
| PAGE DETAIL | Power Supply I: Misc Power, Thermal Shutdown |

NVIDIA CORPORATION
2701 SAN TOMAS EXPRESSWAY
SANTA CLARA, CA 95050, USA

| | | | |
|---|---|---|---|
| NV_PN | 600-11071-BASE-SCH | | |
| PCB REV | P1071-A01 | PAGE | |
| BOM REV | A | DATE | 01-APR-2010 |

ALL NVIDIA DESIGN SPECIFICATIONS, REFERENCE SPECIFICATIONS, REFERENCE BOARDS, FILES, DRAWINGS, DIAGNOSTICS, LISTS AND OTHER DOCUMENTS OR INFORMATION (TOGETHER AND SEPARATELY, 'MATERIALS') ARE BEING PROVIDED 'AS IS'. THE MATERIALS MAY CONTAIN KNOWN AND UNKNOWN VIOLATIONS OR DEVIATIONS OF INDUSTRY STANDARDS AND SPECIFICATIONS. NVIDIA MAKES NO WARRANTIES, EXPRESSED, IMPLIED, STATUTORY OR OTHERWISE WITH RESPECT TO THE MATERIALS OR OTHERWISE, AND EXPRESSLY DISCLAIMS ALL IMPLIED WARRANTIES INCLUDING, WITHOUT LIMITATION, THE WARRANTIES OF DESIGN, OF NONINFRINGEMENT, MERCHANTABILITY OR FITNESS FOR A PARTICULAR PURPOSE, OR ARISING FROM A COURSE OF DEALING, TRADE USAGE, TRADE PRACTICE, OR INDUSTRY STANDARDS.

00029980 MSI CONFIDENTIAL FOR RMA(丁德基) RD(C)20110805001 ONLY

# Power Supply II: FBVDDQ

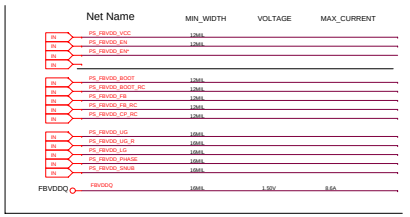


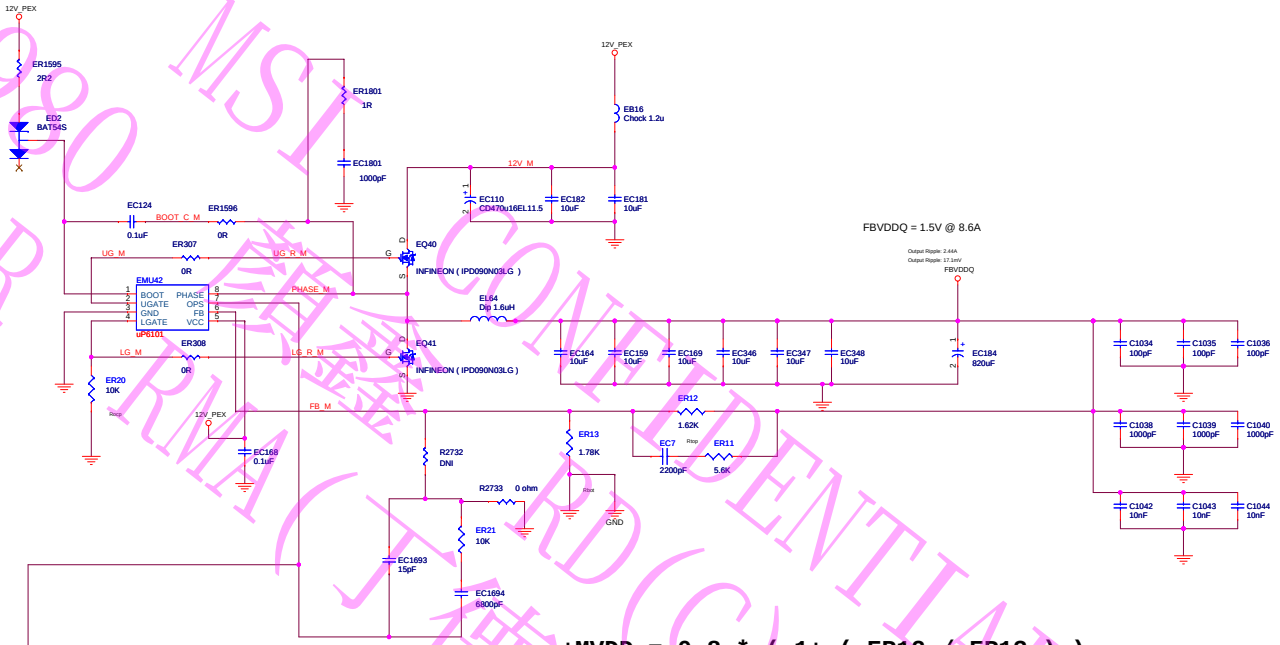


**+MVDD = 0.8 * ( 1+ ( ER12 / ER13 ) )**

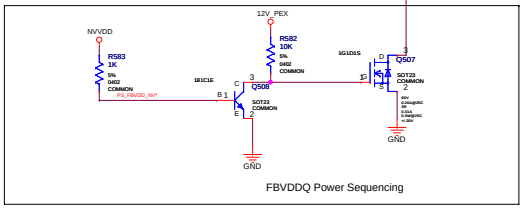



0002998O FOR RMA(下德基) MSI 微星 CONFIDENTIAL RD(C)20110805001 ONLY


| | |
|---|---|
| ASSEMBLY | BASE LEVEL GENERIC SCHEMATIC ONLY, COMMON & NO_STUFF ASSEMBLY NOTES AND BOM NOT FINAL |
| PAGE DETAIL | Power Supply II: FBVDDQ |


ALL NVIDIA DESIGN SPECIFICATIONS, REFERENCE SPECIFICATIONS, REFERENCE BOARDS, FILES, DRAWINGS, DIAGNOSTICS, LISTS AND OTHER DOCUMENTS OR INFORMATION (TOGETHER AND SEPARATELY, 'MATERIALS') ARE BEING PROVIDED 'AS IS'. THE MATERIALS MAY CONTAIN KNOWN AND UNKNOWN VIOLATIONS OR DEVIATIONS OF INDUSTRY STANDARDS AND SPECIFICATIONS. NVIDIA MAKES NO WARRANTIES, EXPRESSED, IMPLIED, STATUTORY OR OTHERWISE WITH RESPECT TO THE MATERIALS OR OTHERWISE, AND EXPRESSLY DISCLAIMS ALL IMPLIED WARRANTIES INCLUDING, WITHOUT LIMITATION, THE WARRANTIES OF DESIGN, OF NONINFRINGEMENT, MERCHANTABILITY OR FITNESS FOR A PARTICULAR PURPOSE, OR ARISING FROM A COURSE OF DEALING, TRADE USAGE, TRADE PRACTICE, OR INDUSTRY STANDARDS.



NVIDIA CORPORATION
2701 SAN TOMAS EXPRESSWAY
SANTA CLARA, CA 95050, USA


| | | | |
|---|---|---|---|
| NV_PN | 600-11071-BASE-SCH | | |
| PCB REV | P1071-A01 | PAGE | |
| BOM REV | A | DATE | 01-APR-2010 |

# Power Supply III: NVVDD

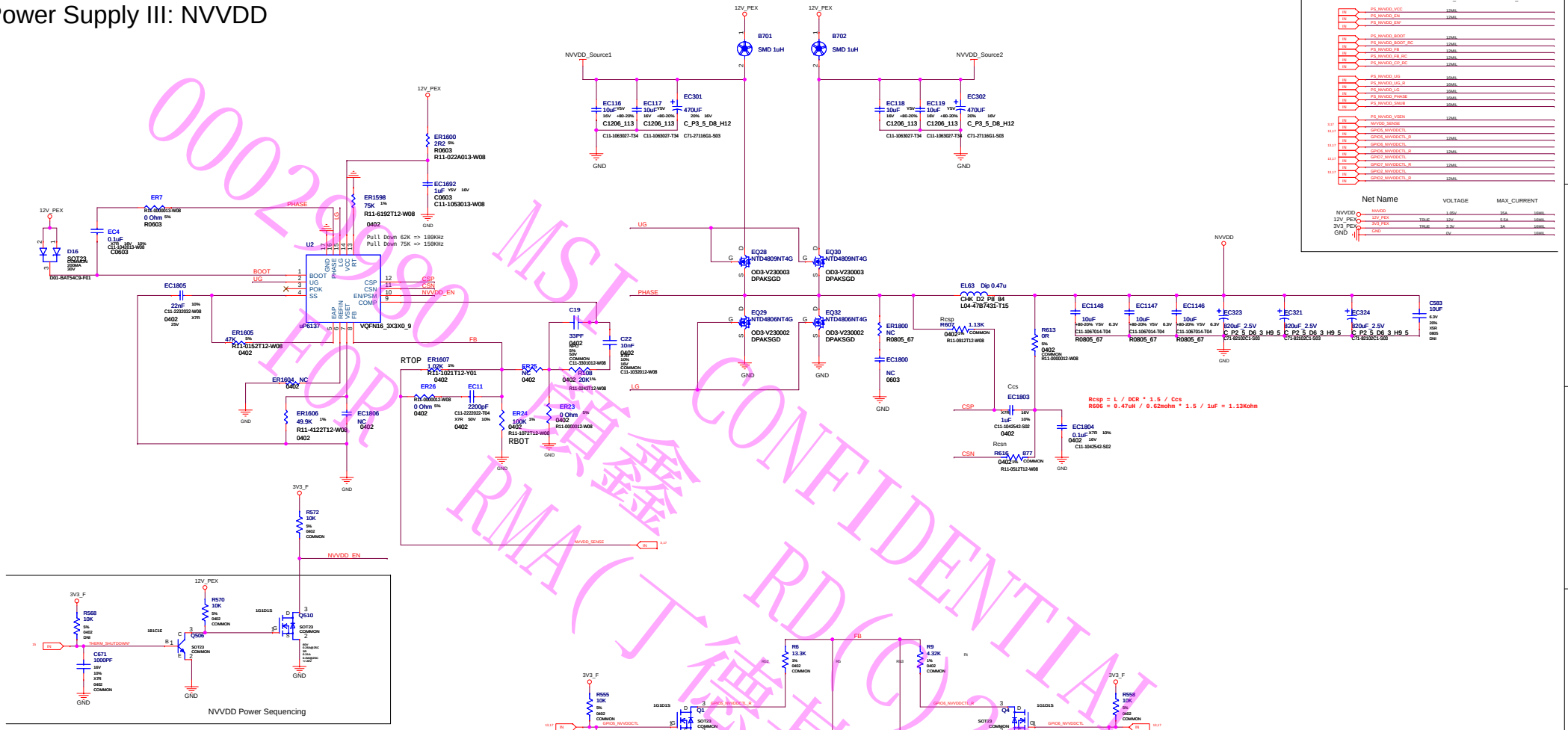


| GPIO[2,7:5] | NVVDD |
|---|---|
| 0000 | 0.870V |
| 0001 | 0.885V |
| 0010 | 0.900V |
| 0011 | 0.915V |
| 0100 | 0.930V |
| 0101 | 0.945V |
| 0110 | 0.960V |
| 0111 | 0.975V |
| 1000 | 0.990V |
| 1001 | 1.005V |
| 1010 | 1.020V |
| 1011 | 1.035V |
| 1100 | 1.050V |
| 1101 | 1.065V |
| 1110 | 1.080V |
| 1111 | 1.095V |

Vref=0.6V; Rt=1.15k; Rb=2.55k; Rb2=47.5k; Rb3=23.7k; Rb4=11.5k; Rb5=5.76k
Vref=0.8V; Rt=931; Rt=10.7k; Rb2=48.7k; Rb3=24.3k; Rb4=12.4k; Rb5=6.19k

| | |
|---|---|
| ASSEMBLY | BASE LEVEL GENERIC SCHEMATIC ONLY, COMMON & NO_STUFF ASSEMBLY NOTES AND BOM NOT FINAL |
| PAGE DETAIL | Power Supply III: NVVDD |


ALL NVIDIA DESIGN SPECIFICATIONS, REFERENCE SPECIFICATIONS, REFERENCE BOARDS, FILES, DRAWINGS, DIAGNOSTICS, LISTS AND OTHER DOCUMENTS OR INFORMATION (TOGETHER AND SEPARATELY, 'MATERIALS') ARE BEING PROVIDED 'AS IS'. THE MATERIALS MAY CONTAIN KNOWN AND UNKNOWN VIOLATIONS OR DEVIATIONS OF INDUSTRY STANDARDS AND SPECIFICATIONS. NVIDIA MAKES NO WARRANTIES, EXPRESSED, IMPLIED, STATUTORY OR OTHERWISE WITH RESPECT TO THE MATERIALS OR OTHERWISE, AND EXPRESSLY DISCLAIMS ALL IMPLIED WARRANTIES INCLUDING, WITHOUT LIMITATION, THE WARRANTIES OF DESIGN, OF NONINFRINGEMENT, MERCHANTABILITY OR FITNESS FOR A PARTICULAR PURPOSE, OR ARISING FROM A COURSE OF DEALING, TRADE USAGE, TRADE PRACTICE, OR INDUSTRY STANDARDS.



NVIDIA CORPORATION
2701 SAN TOMAS EXPRESSWAY
SANTA CLARA, CA 95050, USA


| | |
|---|---|
| NV_PN | 600-11071-BASE-SCH |
| PCB REV | P1071-A01 |
| PAGE | |
| BOM REV | A |
| DATE | 01-APR-2010 |


MSI 微星 CONFIDENTIAL
FOR RD(C) 2011 ONLY
RMA(工程樣品)
0002990

Title: Basenet Report
Design: p1071_a01
Date: Mar 31 14:19:50 2010

Base nets and synonyms for
p1071_a01_lib:P1071_A01(@p1071_a01_lib.p
1071_a01(sch_1))
Base Signal Location([Zone][dir])

3V3_F 15.1G
3V3_PEX 17.2H
3V3_PROT 15.1G
5V 15.1G
12V_PEX 17.2H
DACA_BLUE 8.1G< 8.4C
DACA_BLUE_C 8.1G> 8.5F> 10.3F<
DACA_GREEN 8.1G< 8.3C
DACA_GREEN_C 8.1G> 8.4F> 10.3F<
DACA_HSYNC 8.1G< 8.3C
DACA_HSYNC_C 8.1G> 8.2F> 10.3F<
DACA_HS_BUF 8.1G< 8.2D
DACA_RED 8.1G< 8.3C
DACA_RED_C 8.1G> 8.3F> 10.3F<
DACA_RSET 8.1G< 8.3B
DACA_VREF 8.1G< 8.3B
DACA_VSYNC 8.1G< 8.3C
DACA_VSYNC_C 8.1G> 8.3F> 10.3F<
DACA_VS_BUF 8.1G< 8.2D
DACB_BLUE 9.1G< 9.4C
DACB_BLUE_C 9.1G< 9.5E
DACB_GREEN 9.1G< 9.3C
DACB_GREEN_C 9.1G< 9.4E
DACB_HSYNC 9.1G< 9.3C
DACB_HSYNC_C 9.1G< 9.2E
DACB_HS_BUF 9.1G< 9.2D
DACB_RED 9.1G< 9.3C
DACB_RED_C 9.1G< 9.3E
DACB_RSET 9.1G< 9.3B
DACB_VREF 9.1G< 9.3B
DACB_VSYNC 9.1G< 9.3C
DACB_VSYNC_C 9.1G< 9.3E
DACB_VS_BUF 9.1G< 9.2D
DAC_VDD 8.1G> 8.3B> 9.3A<
DDC_5V 15.1G
DP_MODE 11.2F
DP_MODE* 11.2G
DP_MODE_C 11.4H
FBA_CLK0 4.1G> 4.4C> 5.2A<
5.2C< 5.4B<
FBA_CLK0* 4.1G> 4.4C> 5.2A<
5.2C< 5.4B<
FBA_CLK0_T 5.1G< 5.4B
FBA_CLK1 4.1G> 4.4C> 5.2E<
5.2F< 5.5B<
FBA_CLK1* 4.1G> 4.4C> 5.2E<
5.2F< 5.5C<
FBA_CLK1_T 5.1G< 5.5B
FBA_CMD<0> 4.3C 5.1A 5.1C
FBA_CMD<30..0> 4.1G> 4.3D> 5.1A<
FBA_CMD<2> 4.3C 4.3C 5.3A 5.3C
FBA_CMD<3> 4.3C 4.3D 5.2A 5.2C
FBA_CMD<5> 4.3C 4.4D 5.3A 5.3C
5.3E 5.3F
FBA_CMD<6> 4.3C 5.2A 5.2C 5.2E
5.2F
FBA_CMD<7> 4.3C 5.2A 5.2C 5.2E
5.2F
FBA_CMD<8> 4.3C 5.2A 5.2C 5.2E
5.2F
FBA_CMD<9> 4.3C 5.2A 5.2C 5.2E
5.2F
FBA_CMD<10> 4.3C 5.2A 5.2C 5.2E
5.2F
FBA_CMD<11> 4.3C 5.2A 5.2C 5.2E
5.2F
FBA_CMD<12> 4.3C 5.2A 5.2C 5.2E
5.2F
FBA_CMD<13> 4.3C 5.1A 5.1C 5.1E
5.1F
FBA_CMD<15> 4.3C 5.1A 5.1C 5.1E
5.1F
FBA_CMD<16> 4.3C 5.1E 5.1F
FBA_CMD<18> 4.3C 4.3C 5.3E 5.3F
FBA_CMD<19> 4.3C 4.3D 5.2E 5.2F
FBA_CMD<20> 4.3C 5.2A 5.2C 5.2E
5.2F
FBA_CMD<21> 4.3C 5.2A 5.2C 5.2E
5.2F
FBA_CMD<22> 4.4C 5.2A 5.2C 5.2E
5.2F
FBA_CMD<23> 4.4C 5.2A 5.2C 5.2E
5.2F
FBA_CMD<24> 4.4C 5.2A 5.2C 5.2E
5.2F
FBA_CMD<25> 4.4C 5.2A 5.2C 5.2E
5.2F
FBA_CMD<26> 4.4C 5.2A 5.2C 5.2E
5.2F
FBA_CMD<27> 4.4C 5.2A 5.2C 5.2E
5.2F
FBA_CMD<28> 4.4C 5.2A 5.2C 5.2E
5.2F
FBA_CMD<29> 4.4C 5.2A 5.2C 5.2E
5.2F
FBA_CMD<30> 4.4C 5.1A 5.1C 5.1E
5.1F
FBA_D<0> 4.1A 5.4D
FBA_D<63..0> 4.1A<> 4.1G<> 5.4C<>
FBA_D<1> 4.1A 5.4D
FBA_D<2> 4.1A 5.4D
FBA_D<3> 4.1A 5.4D
FBA_D<4> 4.1A 5.4D
FBA_D<5> 4.1A 5.4D
FBA_D<6> 4.1A 5.4D
FBA_D<7> 4.1A 5.4D
FBA_D<8> 4.1A 5.5D
FBA_D<9> 4.1A 5.5D
FBA_D<10> 4.1A 5.5D
FBA_D<11> 4.1A 5.5D
FBA_D<12> 4.1A 5.5D
FBA_D<13> 4.1A 5.5D
FBA_D<14> 4.1A 5.5D
FBA_D<15> 4.2A 5.5D
FBA_D<16> 4.2A 5.4E
FBA_D<17> 4.2A 5.4E
FBA_D<18> 4.2A 5.4E
FBA_D<19> 4.2A 5.4E
FBA_D<20> 4.2A 5.4E
FBA_D<21> 4.2A 5.4E
FBA_D<22> 4.2A 5.4E
FBA_D<23> 4.2A 5.4E
FBA_D<24> 4.2A 5.5E
FBA_D<25> 4.2A 5.5E
FBA_D<26> 4.2A 5.5E
FBA_D<27> 4.2A 5.4E
FBA_D<28> 4.2A 5.4E
FBA_D<29> 4.2A 5.5E
FBA_D<30> 4.2A 5.5E
FBA_D<31> 4.2A 5.4E
FBA_D<32> 4.2A 5.4F
FBA_D<33> 4.2A 5.4F
FBA_D<34> 4.2A 5.4F
FBA_D<35> 4.2A 5.4F
FBA_D<36> 4.2A 5.4F
FBA_D<37> 4.2A 5.4F
FBA_D<38> 4.2A 5.4F
FBA_D<39> 4.2A 5.4F
FBA_D<40> 4.2A 5.5F
FBA_D<41> 4.2A 5.5F
FBA_D<42> 4.2A 5.5F
FBA_D<43> 4.2A 5.5F
FBA_D<44> 4.2A 5.5F
FBA_D<45> 4.3A 5.5F
FBA_D<46> 4.3A 5.5F
FBA_D<47> 4.3A 5.5F
FBA_D<48> 4.3A 6.4G
FBA_D<49> 4.3A 6.4G
FBA_D<50> 4.3A 6.4G
FBA_D<51> 4.3A 6.4G
FBA_D<52> 4.3A 6.4G
FBA_D<53> 4.3A 6.4G
FBA_D<54> 4.3A 6.4G
FBA_D<55> 4.3A 6.4G
FBA_D<56> 4.3A 6.5G
FBA_D<57> 4.3A 6.5G
FBA_D<58> 4.3A 6.5G
FBA_D<59> 4.3A 6.5G
FBA_D<60> 4.3A 6.5G
FBA_D<61> 4.3A 6.5G
FBA_D<62> 4.3A 6.5G
FBA_D<63> 4.3A 6.5G
FBA_DBIDG0 4.2G< 4.4G
FBA_DBIDG1 4.2G< 4.4G
FBA_DQM<0> 4.3E 6.4D
FBA_DQM<7..0> 4.1G> 4.3E> 6.4C<
FBA_DQM<1> 4.3E 6.5D
FBA_DQM<2> 4.3E 6.4E
FBA_DQM<3> 4.3E 6.5E
FBA_DQM<4> 4.3E 6.4F
FBA_DQM<5> 4.3E 6.5F
FBA_DQM<6> 4.3E 6.4G
FBA_DQM<7> 4.3E 6.5G
FBA_DQS_RN<0> 4.4E 6.4D 7.1G
FBA_DQS_RN<7..0> 4.4E<> 6.4C<> 7.1G<>
FBA_DQS_RN<1> 4.4E 6.5D 7.1G
FBA_DQS_RN<2> 4.4E 6.4E 7.1G
FBA_DQS_RN<3> 4.4E 6.5E 7.1G
FBA_DQS_RN<4> 4.4E 6.4F 7.2G
FBA_DQS_RN<5> 4.4E 6.5F 7.2G
FBA_DQS_RN<6> 4.4E 6.4G 7.2G
FBA_DQS_RN<7> 4.4E 6.5G 7.2G
FBA_DQS_WP<0> 4.4E 6.4D 7.1G
FBA_DQS_WP<7..0> 4.4E<> 6.4C<> 7.1G<>
FBA_DQS_WP<1> 4.4E 6.5D 7.1G
FBA_DQS_WP<2> 4.4E 6.4E 7.1G
FBA_DQS_WP<3> 4.4E 6.5E 7.1G
FBA_DQS_WP<4> 4.4E 6.4F 7.2G
FBA_DQS_WP<5> 4.4E 6.5F 7.2G
FBA_DQS_WP<6> 4.4E 6.4G 7.2G
FBA_DQS_WP<7> 4.4E 6.5G 7.2G
FBA_PREPD 5.1G< 5.3D
FBA_VREF1 6.1G< 6.3H
FBB_ZQ0 6.1G< 6.3A
FBB_ZQ1 6.1G< 6.3C
FBB_ZQ2 6.1G< 6.3E
FBB_ZQ3 6.1G< 6.3F
FBVDDQ 16.1G
FB_CAL_PU_VDDQ 4.1G< 4.5G
FB_CAL_PU_GND 4.1G< 4.5G
FB_CAL_TERM_GND 4.1G< 4.5G
FB_PLLAVDD 4.2G< 4.5C
GPIO0_DVI_HPD 10.1G< 10.4D
GPIO0_DVI_HPD_C 10.1G< 10.3F
GPIO0_DVI_HPD_R 10.1G< 10.4E
GPIO2_NVVDDCTL 13.2D> 17.1G< 17.5G<
GPIO2_NVVDDCTL_R 17.2G< 17.5F
GPIO4_FAN_TACH 13.2D< 13.2G< 14.2F>
GPIO5_NVVDDCTL 13.2D> 17.1G< 17.4D<
GPIO5_NVVDDCTL_R 17.1G< 17.4E
GPIO6_NVVDDCTL 13.2D> 17.1G< 17.4G<
GPIO6_NVVDDCTL_R 17.1G< 17.4F
GPIO7_NVVDDCTL 13.2D> 17.1G< 17.5D<
GPIO7_NVVDDCTL_R 17.1G< 17.5E
GPIO8_THERM_OVERT* 13.2D> 15.1G< 15.2B<
GPIO16_FAN_ADJ 14.1G< 14.2C
GPIO16_FAN_C 14.1G< 14.2E
GPIO16_FAN_D 14.2D
GPIO16_FAN_L 14.1G< 14.2E
GPIO16_FAN_PWM 13.2D> 13.2G> 14.2B<
14.2F<
GPIO16_FAN_Q 14.1G< 14.2C
GPIO21_HDMI_HPD 11.2G< 11.4D
GPIO21_HDMI_HPD_C 11.2G< 11.3G
GPIO21_HDMI_HPD_R 11.2G< 11.4E
GPU_BUFRST* 13.4D> 15.1G< 15.3E<
GPU_PLLVDD 13.2G< 13.4B
GPU_TESTMODE 3.1G< 3.5F
I2CA_SCL 8.1F> 8.1G> 10.3F<
I2CA_SDA 8.1G<> 8.2F<> 10.3F<>
I2CB_SCL 9.1G< 9.3C
I2CB_SDA 9.1G< 9.3C
I2CC_SCL 13.1D 13.1G<
I2CC_SCL_R 13.1F 13.1G<
I2CC_SDA 13.1D 13.1G<
I2CC_SDA_R 13.1F 13.1G<
I2CZ_SCL 11.1G< 11.3D
I2CZ_SCL_C 11.1G< 11.3G
I2CZ_SCL_Q 11.3F
I2CZ_SDA 11.1G< 11.3D
I2CZ_SDA_C 11.1G< 11.3G
I2CZ_SDA_Q 11.2F
IFPAB_IOVDD 10.2G< 10.3C
IFPAB_PLLVDD 10.1G< 10.2C
IFPAB_RSET 10.1G< 10.2C
IFPAB_TXC 10.1G< 10.3D
IFPAB_TXC* 10.1G< 10.3D
IFPAB_TXD0 10.1G< 10.2D
IFPAB_TXD0* 10.1G< 10.2D
IFPAB_TXD1 10.1G< 10.2D
IFPAB_TXD1* 10.1G< 10.2D
IFPAB_TXD2 10.1G< 10.2D
IFPAB_TXD2* 10.1G< 10.2D
IFPAB_TXD4 10.1G< 10.3D
IFPAB_TXD4* 10.1G< 10.3D
IFPAB_TXD5 10.1G< 10.3D
IFPAB_TXD5* 10.1G< 10.3D
IFPAB_TXD6 10.1G< 10.3D
IFPAB_TXD6* 10.1G< 10.3D
IFPF_IOVDD 11.2G< 11.3C
IFPF_PLLVDD 11.2C 11.2G<
IFPF_RSET 11.2G< 11.3C
IFPF_TERM 11.2G< 11.5C
IFPF_TXC 11.1G< 11.3D
IFPF_TXC* 11.1G< 11.3D
IFPF_TXC_C 11.1G< 11.3G 11.5D
IFPF_TXC_C* 11.1G< 11.3G 11.5D
IFPF_TXD0 11.1G< 11.3D
IFPF_TXD0* 11.1G< 11.3D
IFPF_TXD0_C 11.1G< 11.3G 11.4D
IFPF_TXD0_C* 11.1G< 11.3G 11.4D
IFPF_TXD1 11.1G< 11.3D
IFPF_TXD1* 11.1G< 11.3D
IFPF_TXD1_C 11.1G< 11.3G 11.4D
IFPF_TXD1_C* 11.1G< 11.3G 11.4D
IFPF_TXD2 11.1G< 11.3D
IFPF_TXD2* 11.1G< 11.3D
IFPF_TXD2_C 11.1G< 11.4D 11.4G
IFPF_TXD2_C* 11.1G< 11.3G 11.4D
IROM_VCC 13.1F 13.1G<
JTAG_TCK 13.1G< 13.2C
JTAG_TDI 13.1G< 13.2C
JTAG_TDO 13.1G< 13.2C
JTAG_TMS 13.1G< 13.2C
JTAG_TRST* 13.1G< 13.2C
NVVDD 17.1G 17.2H
NVVDD_SENSE 3.4F> 17.1G< 17.4H<
PEX_PLL 15.1G
PEX_PLLVDD 3.1G< 3.4F
PEX_PRSNT* 3.1B 3.1G<
PEX_REFCLK 3.2C 3.5A<
PEX_REFCLK* 3.2C 3.5A<
PEX_RST* 3.1D> 15.1G< 15.2E<
15.3E<
PEX_RST_BUF* 15.1G< 15.2F
PEX_RX0 3.2C 3.4A<
PEX_RX0* 3.2C 3.4A<
PEX_RX1 3.2C 3.4A<
PEX_RX1* 3.2C 3.4A<
PEX_RX2 3.2C 3.4A<
PEX_RX2* 3.3C 3.4A<
PEX_RX3 3.3C 3.4A<
PEX_RX3* 3.3C 3.4A<
PEX_RX4 3.3C 3.4A<
PEX_RX4* 3.3C 3.4A<
PEX_RX5 3.3C 3.5A<
PEX_RX5* 3.3C 3.5A<
PEX_RX6 3.3C 3.5A<
PEX_RX6* 3.3C 3.5A<
PEX_RX7 3.3C 3.5A<
PEX_RX7* 3.4C 3.5A<
PEX_RX8 3.4C 3.5A<
PEX_RX8* 3.4C 3.5A<
PEX_RX9 3.4C 3.5A<
PEX_RX9* 3.4C 3.5A<
PEX_RX10 3.4C 3.5A<
PEX_RX10* 3.4C 3.5A<
PEX_RX11 3.4C 3.5A<
PEX_RX11* 3.4C 3.5A<
PEX_RX12 3.4C 3.5A<
PEX_RX12* 3.5A< 3.5C
PEX_RX13 3.5A< 3.5C
PEX_RX13* 3.5A< 17.1G< 17.2B
PEX_RX14 3.5A< 3.5C
PEX_RX14* 3.5A< 3.5C
PEX_RX15 3.5A< 3.5C
PEX_RX15* 3.5A< 3.5C
PEX_TERMP 3.1G< 3.5F
PEX_TX0 3.2A< 3.2D
PEX_TX0* 3.2A< 3.2D
PEX_TX1 3.2A< 3.2D
PEX_TX1* 3.2A< 3.2D
PEX_TX2 3.2A< 3.2D
PEX_TX2* 3.2A< 3.2D
PEX_TX3 3.2A< 3.3D
PEX_TX3* 3.2A< 3.3D
PEX_TX4 3.2A< 3.3D
PEX_TX4* 3.2A< 3.3D
PEX_TX5 3.2A< 3.3D
PEX_TX5* 3.2A< 3.3D
PEX_TX6 3.2A< 3.3D
PEX_TX6* 3.2A< 3.3D
PEX_TX7 3.2A< 3.3D
PEX_TX7* 3.2A< 3.3D
PEX_TX8 3.3A< 3.4D
PEX_TX8* 3.3A< 3.4D
PEX_TX9 3.3A< 3.4D
PEX_TX9* 3.3A< 3.4D
PEX_TX10 3.3A< 3.4D
PEX_TX10* 3.3A< 3.4D
PEX_TX11 3.3A< 3.4D
PEX_TX11* 3.3A< 3.4D
PEX_TX12 3.3A< 3.4D
PEX_TX12* 3.3A< 3.4D
PEX_TX13 3.3A< 3.5D
PEX_TX13* 3.3A< 3.5D
PEX_TX14 3.3A< 3.5D
PEX_TX14* 3.3A< 3.5D
PEX_TX15 3.3A< 3.5D
PEX_TX15* 3.3A< 3.5D
PEX_TX0 3.2C 3.3A<
PEX_TX0* 3.2C 3.3A<
PEX_TX1 3.2C 3.3A<
PEX_TX1* 3.2C 3.3A<
PEX_TX2 3.2C 3.3A<
PEX_TX2* 3.2C 3.3A<
PEX_TX3 3.3A< 3.3C
PEX_TX3* 3.3A< 3.3C
PEX_TX4 3.3A< 3.3C
PEX_TX4* 3.3A< 3.3C
PEX_TX5 3.3A< 3.3C
PEX_TX5* 3.3A< 3.3C
PEX_TX6 3.3A< 3.3C
PEX_TX6* 3.3C 3.4A<
PEX_TX7 3.3C 3.4A<
PEX_TX7* 3.3C 3.4A<
PEX_TX8 3.4A< 3.4C
PEX_TX8* 3.4A< 3.4C
PEX_TX9 3.4A< 3.4C
PEX_TX9* 3.4A< 3.4C
PEX_TX10 3.4A< 3.4C
PEX_TX10* 3.4A< 3.4C
PEX_TX11 3.4A< 3.4C
PEX_TX11* 3.4A< 3.4C
PEX_TX12 3.4A< 3.4C
PEX_TX12* 3.4A< 3.4C
PEX_TX13 3.4A< 3.5C
PEX_TX13* 3.4A< 3.5C
PEX_TX14 3.4A< 3.5C
PEX_TX14* 3.4A< 3.5C
PEX_TX15 3.4A< 3.5C
PEX_TX15* 3.4A< 3.5C
PEX_VDD 15.1G
PS_5V_BACKDRIVE 15.1G< 15.4B
PS_5V_PROT 15.1G< 15.4B
PS_FBVDD_BOOT 16.1G< 16.2C
PS_FBVDD_BOOT_RC 16.1G< 16.2D
PS_FBVDD_CP_RC 16.1G< 16.4C
PS_FBVDD_EN 16.1G< 16.3B
PS_FBVDD_EN* 16.1G< 16.4B
PS_FBVDD_FB 16.1G< 16.3C
PS_FBVDD_FB_R 16.4F
PS_FBVDD_FB_RC 16.1G< 16.3F
PS_FBVDD_LG 16.1G< 16.3C
PS_FBVDD_NV* 16.4A
PS_FBVDD_PHASE 16.1G< 16.3C
PS_FBVDD_SNUB 16.1G< 16.3F
PS_FBVDD_UG 16.1G< 16.3C
PS_FBVDD_UG_R 16.1G< 16.2D
PS_FBVDD_VCC 16.1G< 16.2B
PS_NVVDD_BOOT 17.1G< 17.2C
PS_NVVDD_BOOT_RC 17.1G< 17.2D
PS_NVVDD_CP_RC 17.1G< 17.4C
PS_NVVDD_EN 17.1G< 17.3B
PS_NVVDD_ENV 17.1G< 17.4B
PS_NVVDD_FB 17.1G< 17.3C
PS_NVVDD_FB_RC 17.1G< 17.3F
PS_NVVDD_LG 17.1G< 17.3C
PS_NVVDD_PHASE 17.1G< 17.3C
PS_NVVDD_SNUB 17.1G< 17.3F
PS_NVVDD_UG 17.1G< 17.3C
PS_NVVDD_UG_R 17.1G< 17.2D
PS_NVVDD_VCC 17.1G< 17.2B
PS_NVVDD_VSEN 17.1G< 17.4G
PS_PEXVDD_CNTL 15.1G< 15.4E
PS_PEXVDD_FB 15.1G< 15.4F
ROM_CS* 13.2C< 13.3D
ROM_SCLK 13.2C< 13.3D< 14.4B>
14.4C
ROM_SI 13.2C< 13.3D< 14.3E>
14.3C
ROM_SO 13.2C< 13.3D< 14.3E>
14.3C
SNN_3V3FUSE_OC 15.5E
SNN_3V3_AUX 3.1B
SNN_BBASN 13.3C
SNN_BBASP 13.3C
SNN_CEC 13.3C
SNN_DP_CEC 11.4H
SNN_FBA0_A1 5.3A
SNN_FBA0_A11 5.3A
SNN_FBA0_J2 5.3A
SNN_FBA0_J10 5.3A
SNN_FBA0_L2 5.3A
SNN_FBA0_L10 5.3A
SNN_FBA0_M8 5.2A
SNN_FBA0_T1 5.3A
SNN_FBA0_T8 5.2A
SNN_FBA0_T11 5.3A
SNN_FBA1_A1 5.3C
SNN_FBA1_A11 5.3C
SNN_FBA1_J2 5.3C
SNN_FBA1_J10 5.3C
SNN_FBA1_L2 5.3C
SNN_FBA1_L10 5.3C
SNN_FBA1_M8 5.2C
SNN_FBA1_T1 5.3C
SNN_FBA1_T8 5.2C
SNN_FBA1_T11 5.3C
SNN_FBA2_A1 5.3E
SNN_FBA2_A11 5.3E
SNN_FBA2_J2 5.3E
SNN_FBA2_J10 5.3E
SNN_FBA2_L2 5.3E
SNN_FBA2_L10 5.3E
SNN_FBA2_M8 5.2E
SNN_FBA2_T1 5.3E
SNN_FBA2_T8 5.2E
SNN_FBA2_T11 5.3E
SNN_FBA3_A1 5.3F
SNN_FBA3_A11 5.3F
SNN_FBA3_J2 5.3F
SNN_FBA3_J10 5.3F
SNN_FBA3_L2 5.3F
SNN_FBA3_L10 5.3F
SNN_FBA3_M8 5.2F
SNN_FBA3_T1 5.3F
SNN_FBA3_T8 5.2F
SNN_FBA3_T11 5.3F
SNN_FBA_CMD1 4.3C
SNN_FBA_CMD4 4.3C
SNN_FBA_CMD14 4.3C
SNN_FBA_CMD17 4.3C
SNN_FBA_CMD31 4.4C
SNN_FBA_WCK0 4.4A
SNN_FBA_WCK1 4.4A
SNN_FBA_WCK2 4.4A
SNN_FBA_WCK3 4.4A
SNN_FBA_WCKN0 4.4A
SNN_FBA_WCKN1 4.4A
SNN_FBA_WCKN2 4.4A
SNN_FBA_WCKN3 4.4A
SNN_FBB0_A1 6.3A
SNN_FBB0_A11 6.3A
SNN_FBB0_J2 6.3A
SNN_FBB0_J10 6.3A
SNN_FBB0_L2 6.3A
SNN_FBB0_L10 6.3A
SNN_FBB0_M8 6.2A
SNN_FBB0_T1 6.3A
SNN_FBB0_T8 6.2A
SNN_FBB0_T11 6.3A
SNN_FBB1_A1 6.3C
SNN_FBB1_A11 6.3C
SNN_FBB1_J2 6.3C
SNN_FBB1_J10 6.3C
SNN_FBB1_L2 6.3C
SNN_FBB1_L10 6.3C
SNN_FBB1_M8 6.2C
SNN_FBB1_T1 6.3C
SNN_FBB1_T8 6.2C
SNN_FBB1_T11 6.3C
SNN_FBB2_A1 6.3E
SNN_FBB2_A11 6.3E
SNN_FBB2_J2 6.3E
SNN_FBB2_J10 6.3E
SNN_FBB2_L2 6.3E
SNN_FBB2_L10 6.3E
SNN_FBB2_M8 6.2E
SNN_FBB2_T1 6.3E
SNN_FBB2_T8 6.2E
SNN_FBB2_T11 6.3E
SNN_FBB3_A1 6.3F
SNN_FBB3_A11 6.3F
SNN_FBB3_J2 6.3F
SNN_FBB3_J10 6.3F
SNN_FBB3_L2 6.3F
SNN_FBB3_L10 6.3F
SNN_FBB3_M8 6.2F
SNN_FBB3_T1 6.3F
SNN_FBB3_T8 6.2F
SNN_FBB3_T11 6.3F
SNN_FBB_CMD1 4.3G
SNN_FBB_CMD4 4.3G
SNN_FBB_CMD14 4.3G
SNN_FBB_CMD17 4.3G

| | |
|---|---|
| ASSEMBLY | BASE LEVEL GENERIC SCHEMATIC ONLY, COMMON & NO_STUFF ASSEMBLY NOTES AND BOM NOT FINAL |
| PAGE DETAIL | <edit here to insert page detail> |

ALL NVIDIA DESIGN SPECIFICATIONS, REFERENCE SPECIFICATIONS, REFERENCE BOARDS, FILES, DRAWINGS, DIAGNOSTICS, LISTS AND OTHER DOCUMENTS OR INFORMATION (TOGETHER AND SEPARATELY, 'MATERIALS') ARE BEING PROVIDED 'AS IS'. THE MATERIALS MAY CONTAIN KNOWN AND UNKNOWN VIOLATIONS OR DEVIATIONS OF INDUSTRY STANDARDS AND SPECIFICATIONS. NVIDIA MAKES NO WARRANTIES, EXPRESSED, IMPLIED, STATUTORY OR OTHERWISE WITH RESPECT TO THE MATERIALS OR OTHERWISE, AND EXPRESSLY DISCLAIMS ALL IMPLIED WARRANTIES INCLUDING, WITHOUT LIMITATION, THE WARRANTIES OF DESIGN, OF NONINFRINGEMENT, MERCHANTABILITY OR FITNESS FOR A PARTICULAR PURPOSE, OR ARISING FROM A COURSE OF DEALING, TRADE USAGE, TRADE PRACTICE, OR INDUSTRY STANDARDS.

NVIDIA CORPORATION
2701 SAN TOMAS EXPRESSWAY
SANTA CLARA, CA 95050, USA

| | | | |
|---|---|---|---|
| NV_PN | 600-11071-BASE-SCH | | |
| PCB REV | P1071-A01 | PAGE | <CON_PAGE_NUM> OF <CON_TOTAL_PAGES> |
| BOM REV | A | DATE | 01-APR-2010 |

MSI 精英 CONFIDENTIAL
FOR RMA (德基) 2012/08/01 ONLY
C0299G0

SNN_FBB_CMD31 4.4G
SNN_FBB_WCK0 4.4E
SNN_FBB_WCK1 4.4E
SNN_FBB_WCK2 4.4E
SNN_FBB_WCK3 4.4E
SNN_FBB_WCKN0 4.4E
SNN_FBB_WCKN1 4.4E
SNN_FBB_WCKN2 4.4E
SNN_FBB_WCKN3 4.4E
SNN_FB_DLLAVDD 4.5C
SNN_FB_PLLAVDD 4.5C
SNN_FB_VREF 4.5A
SNN_GPIO1 12.3B
SNN_GPIO3 13.2D
SNN_GPIO9 13.2D
SNN_GPIO10 13.2D
SNN_GPIO11 13.2D
SNN_GPIO12 13.2D
SNN_GPIO13 13.2D
SNN_GPIO14 13.2D
SNN_GPIO15 11.3D
SNN_GPIO17 13.2D
SNN_GPIO18 13.2D
SNN_GPIO19 12.4B
SNN_GPIO20 13.2D
SNN_GPIO22 13.2D
SNN_GPIO23 13.2D
SNN_GPIO24 13.2D
SNN_GPU_A2 3.2F
SNN_GPU_A7 3.2F
SNN_GPU_AA4 3.2F
SNN_GPU_AB4 3.2F
SNN_GPU_AB7 3.3F
SNN_GPU_AC5 3.3F
SNN_GPU_AD6 3.3F
SNN_GPU_AF6 3.3F
SNN_GPU_AG6 3.3F
SNN_GPU_AJ5 3.3F
SNN_GPU_AK15 3.3F
SNN_GPU_AL7 3.3F
SNN_GPU_B7 3.3F
SNN_GPU_C7 3.3F
SNN_GPU_D5 3.3F
SNN_GPU_D6 3.3F
SNN_GPU_D7 3.3F
SNN_GPU_E5 3.3F
SNN_GPU_E7 3.3F
SNN_GPU_F4 3.3F
SNN_GPU_G5 3.3F
SNN_GPU_H32 3.3F
SNN_GPU_P6 3.3F
SNN_GPU_U7 3.3F
SNN_GPU_V6 3.3F
SNN_GPU_Y4 3.3F
SNN_HDMI_CEC 11.3G
SNN_HDMI_RSVD 11.3G
SNN_I2CH_SCL 13.3D
SNN_I2CH_SDA 13.3D
SNN_I2CS_SCL 13.1D
SNN_I2CS_SDA 13.1D
SNN_IFPA_TXD3 10.3D
SNN_IFPA_TXD3* 10.2D
SNN_IFPB_TXC 10.3D
SNN_IFPB_TXC* 10.3D
SNN_IFPB_TXD7 10.3D
SNN_IFPB_TXD7* 10.3D
SNN_IFPC_AUX 12.2B
SNN_IFPC_AUX* 12.2B
SNN_IFPC_L0 12.3B
SNN_IFPC_L0* 12.3B
SNN_IFPC_L1 12.2B
SNN_IFPC_L1* 12.2B
SNN_IFPC_L2 12.2B
SNN_IFPC_L2* 12.2B
SNN_IFPC_L3 12.2B
SNN_IFPC_L3* 12.2B
SNN_IFPC_RSET 12.2A
SNN_IFPD_AUX 12.4B
SNN_IFPD_AUX* 12.4B
SNN_IFPD_L0 12.4B
SNN_IFPD_L0* 12.4B
SNN_IFPD_L1 12.4B
SNN_IFPD_L1* 12.4B
SNN_IFPD_L2 12.4B
SNN_IFPD_L2* 12.4B
SNN_IFPD_L3 12.4B
SNN_IFPD_L3* 12.4B
SNN_IFPD_RSET 12.4A
SNN_IFPE_AUX 11.2D
SNN_IFPE_AUX* 11.2D
SNN_IFPE_L0 11.3D
SNN_IFPE_L0* 11.3D
SNN_IFPE_L1 11.3D
SNN_IFPE_L1* 11.3D
SNN_IFPE_L2 11.3D
SNN_IFPE_L2* 11.3D
SNN_IFPE_L3 11.2D
SNN_IFPE_L3* 11.2D
SNN_MIOACAL_PD_VDD 12.2C
Q
SNN_MIOACAL_PU_GND 12.2C

SNN_MIOAD0 12.2D
SNN_MIOAD1 12.2D
SNN_MIOAD2 12.2D
SNN_MIOAD3 12.2D
SNN_MIOAD4 12.2D
SNN_MIOAD5 12.2D
SNN_MIOAD6 12.2D
SNN_MIOAD7 12.2D
SNN_MIOAD8 12.2D
SNN_MIOAD9 12.2D
SNN_MIOAD10 12.2D
SNN_MIOAD11 12.2D
SNN_MIOAD12 12.2D
SNN_MIOAD13 12.2D
SNN_MIOAD14 12.2D
SNN_MIOA_CLKIN 12.3D
SNN_MIOA_CLKOUT 12.3D
SNN_MIOA_CLKOUT* 12.3D
SNN_MIOA_CTL3 12.3D
SNN_MIOA_DE 12.3D
SNN_MIOA_HSYNC 12.3D
SNN_MIOA_VDDQ_P9 12.2C
SNN_MIOA_VDDQ_R9 12.2C
SNN_MIOA_VDDQ_T9 12.2C
SNN_MIOA_VDDQ_U9 12.2C
SNN_MIOA_VREF 12.2C
SNN_MIOA_VSYNC 12.3D
SNN_MIOBCAL_PD_VDD 12.4C
Q
SNN_MIOBCAL_PU_GND 12.4C
SNN_MIOBD0 12.3D
SNN_MIOBD1 12.3D
SNN_MIOBD2 12.4D
SNN_MIOBD3 12.4D
SNN_MIOBD4 12.4D
SNN_MIOBD5 12.4D
SNN_MIOBD6 12.4D
SNN_MIOBD7 12.4D
SNN_MIOBD8 12.4D
SNN_MIOBD9 12.4D
SNN_MIOBD10 12.4D
SNN_MIOBD11 12.4D
SNN_MIOBD12 12.4D
SNN_MIOBD13 12.4D
SNN_MIOBD14 12.4D
SNN_MIOB_CLKIN 12.5D
SNN_MIOB_CLKOUT 12.4D
SNN_MIOB_CLKOUT* 12.4D
SNN_MIOB_CTL3 12.4D
SNN_MIOB_DE 12.4D
SNN_MIOB_HSYNC 12.4D
SNN_MIOB_VDDQ_AA9 12.3C
SNN_MIOB_VDDQ_AB9 12.3C
SNN_MIOB_VDDQ_W9 12.4C
SNN_MIOB_VDDQ_Y9 12.4C
SNN_MIOB_VREF 12.4C
SNN_MIOB_VSYNC 12.4D
SNN_NVVDD_SENSE_1 3.4F
SNN_NVVDD_SENSE_3 3.4F
SNN_PEX_CLKREQ* 3.1D
SNN_PEX_PLL_HVDD 3.5F
SNN_PEX_TSTCLK_OUT 3.2D
SNN_PEX_TSTCLK_OUT 3.2D
*
SNN_PGOOD_OUT 13.4D
SNN_PS_PEXVDD_NC 15.4E
SNN_PS_PEXVDD_POK 15.4E
SNN_SMCLK 3.1C
SNN_SMDAT 3.1C
SNN_SPDIF 13.4D
SNN_SVDD_3V3 3.2F
SNN_XTAL_OUTBUFF 13.5D
STRAP0 13.2G< 13.3D< 14.4C 14.5B>
STRAP1 13.2G< 13.3D< 14.4B> 14.4C
STRAP2 13.2G< 13.3D< 14.4B> 14.4C
STRAP_REF0 13.1G< 13.4C
STRAP_REF1 13.1G< 13.4C
SYS_RST 15.1G< 15.3B< 15.3F>
SYS_RST* 15.1G< 15.3F
THERMDN 13.1C 13.1G<
THERMDP 13.1G< 13.2C
THERM_N 15.1G< 15.3C
THERM_P 15.1G< 15.3C
THERM_P* 15.1G< 15.2C
THERM_SHUTDOWN* 15.1G> 15.2D> 17.4A<
XTAL_IN 13.1G< 13.5B
XTAL_OUT 13.1G< 13.5D
XTAL_SSIN 13.1G< 13.5B


MSI CONFIDENTIAL
RD(C)20110805001
FOR 602-29980 預留金 RMA(丁德基) ONLY


| | |
|---|---|
| ASSEMBLY | BASE LEVEL GENERIC SCHEMATIC ONLY, COMMON & NO_STUFF ASSEMBLY NOTES AND BOM NOT FINAL |
| PAGE DETAIL | <edit here to insert page detail> |


ALL NVIDIA DESIGN SPECIFICATIONS, REFERENCE SPECIFICATIONS, REFERENCE BOARDS, FILES, DRAWINGS, DIAGNOSTICS, LISTS AND OTHER DOCUMENTS OR INFORMATION (TOGETHER AND SEPARATELY, 'MATERIALS') ARE BEING PROVIDED 'AS IS'. THE MATERIALS MAY CONTAIN KNOWN AND UNKNOWN VIOLATIONS OR DEVIATIONS OF INDUSTRY STANDARDS AND SPECIFICATIONS. NVIDIA MAKES NO WARRANTIES, EXPRESSED, IMPLIED, STATUTORY OR OTHERWISE WITH RESPECT TO THE MATERIALS OR OTHERWISE, AND EXPRESSLY DISCLAIMS ALL IMPLIED WARRANTIES INCLUDING, WITHOUT LIMITATION, THE WARRANTIES OF DESIGN, OF NONINFRINGEMENT, MERCHANTABILITY OR FITNESS FOR A PARTICULAR PURPOSE, OR ARISING FROM A COURSE OF DEALING, TRADE USAGE, TRADE PRACTICE, OR INDUSTRY STANDARDS.



NVIDIA CORPORATION
2701 SAN TOMAS EXPRESSWAY
SANTA CLARA, CA 95050, USA


| | | | |
|---|---|---|---|
| NV_PN | 600-11071-BASE-SCH | | |
| PCB REV | P1071-A01 | PAGE | <CON_PAGE_NUM> OF <CON_TOTAL_PAGES> |
| BOM REV | A | DATE | 01-APR-2010 |

Title: Cref Part
Report
Design: p1071_a01
Date: Mar 31
14:19:50 2010

BKT1 [14.4F]
C1 [10.2F]
C2 [10.4F]
C3 [11.4F]
C4 [11.4F]
C5 [10.4F]
C6 [10.4E]
C7 [11.3G]
C8 [8.3C]
C9 [11.3E]
C10 [11.3E]
C11 [11.3E]
C12 [11.3E]
C13 [11.4E]
C14 [11.3E]
C15 [11.3E]
C16 [11.3E]
C17 [11.4E]
C18 [9.3F]
C19 [15.4C]
C20 [15.4C]
C21 [17.3F]
C22 [17.1F]
C23 [15.4B]
C24 [16.2E]
C25 [17.2E]
C26 [17.1F]
C27 [17.1E]
C28 [3.1B]
C29 [16.3G]
C30 [16.3H]
C31 [17.3H]
C32 [17.3H]
C33 [17.3G]
C34 [17.3G]
C35 [16.3F]
C36 [15.4D]
C37 [15.4E]
C38 [3.1A]
C39 [3.1A]
C40 [15.1B]
C41 [13.5D]
C42 [15.4E]
C43 [13.3E]
C44 [15.1C]
C45 [13.5B]
C46 [15.4G]
C47 [15.4H]
C48 [6.4C]
C49 [15.4G]
C50 [3.1G]
C51 [15.4G]
C52 [7.2D]
C53 [6.4D]
C54 [7.3F]
C55 [7.3E]
C56 [7.3D]
C57 [7.2E]
C58 [7.3D]
C59 [7.3D]
C60 [7.3D]
C61 [7.3E]
C62 [6.4H]
C63 [7.3F]
C64 [7.3E]
C65 [6.5C]
C66 [7.2B]
C67 [7.2C]
C68 [7.3C]
C69 [7.3C]
C70 [5.4H]
C71 [7.3B]
C72 [7.3B]
C73 [7.3A]
C74 [7.3B]
C75 [7.2C]
C76 [7.3C]
C77 [7.3C]
C78 [7.3C]
C79 [17.2F]
C80 [17.2F]
C81 [17.2F]
C82 [17.2G]
C83 [14.2D]
C84 [11.2E]
C85 [11.3E]
C86 [11.2F]
C87 [11.4H]
C88 [15.5E]
C89 [15.5F]
C90 [15.5G]
C501 [7.2C]
C502 [7.3B]
C503 [7.3B]
C504 [7.2B]
C505 [7.3B]
C506 [7.3C]
C507 [5.4D]
C508 [5.5C]
C509 [5.4C]
C510 [7.3C]
C511 [7.3B]
C512 [7.2C]
C513 [7.3C]
C514 [7.3A]
C515 [7.2B]
C516 [7.3A]
C517 [7.3D]
C518 [7.2A]
C519 [7.3B]
C520 [7.3C]
C521 [7.3C]
C522 [7.3C]
C523 [7.3B]
C524 [3.5D]
C525 [3.5D]
C526 [3.5D]
C527 [3.5D]
C528 [3.5D]
C529 [3.5D]
C530 [7.3E]
C531 [7.3E]
C532 [7.3E]
C533 [3.4D]
C534 [3.4D]
C535 [7.3F]
C536 [7.3E]
C537 [3.4D]
C538 [3.4D]
C539 [7.3D]
C540 [7.3E]
C541 [3.4D]
C542 [3.4D]
C543 [3.4D]
C544 [3.4D]
C545 [4.1C]
C546 [3.4D]
C547 [4.1D]
C548 [4.1C]
C549 [4.1D]
C550 [7.3D]
C551 [4.1D]
C552 [4.5D]
C553 [4.5C]
C554 [3.4D]
C555 [7.3E]
C556 [4.1C]
C557 [4.5D]
C558 [3.1F]
C559 [4.1D]
C560 [12.3G]
C561 [3.3D]
C562 [3.3D]
C563 [12.3G]
C564 [3.1F]
C565 [3.1F]
C566 [12.4F]
C567 [12.2G]
C568 [12.2G]
C569 [3.1F]
C570 [4.1C]
C571 [12.3G]
C572 [12.3G]
C573 [12.3F]
C574 [12.2F]
C575 [12.2F]
C576 [3.2F]
C577 [3.2F]
C578 [3.3D]
C579 [3.3D]
C580 [3.1F]
C581 [12.3G]
C582 [12.4G]
C583 [17.3G]
C584 [3.2F]
C585 [3.1G]
C586 [12.3F]
C587 [12.2F]
C588 [12.3F]
C589 [12.3F]
C590 [3.1F]
C591 [12.4F]
C592 [4.1D]
C593 [12.2G]
C594 [3.3D]
C595 [3.3D]
C596 [3.4F]
C597 [8.3A]
C598 [12.2G]
C599 [8.3B]
C600 [12.2F]
C601 [3.4F]
C602 [4.1D]
C603 [13.4B]
C604 [3.2F]
C605 [3.2G]
C606 [12.3G]
C607 [12.3F]
C608 [12.3F]
C609 [10.3B]
C610 [3.3F]
C611 [13.4B]
C612 [7.3E]
C613 [7.3E]
C614 [10.3B]
C615 [10.3B]
C616 [13.4B]
C617 [10.3C]
C618 [3.3D]
C619 [3.3D]
C620 [3.3F]
C621 [9.3B]
C622 [10.3B]
C623 [3.2E]
C624 [13.4A]
C625 [3.4G]
C626 [11.3C]
C627 [9.3A]
C628 [9.3A]
C629 [11.3B]
C630 [9.3A]
C631 [11.3B]
C632 [3.4G]
C633 [11.3B]
C634 [11.3B]
C635 [3.3D]
C636 [3.3D]
C637 [11.3B]
C638 [7.2E]
C639 [10.3B]
C640 [7.2E]
C641 [7.2F]
C642 [10.3B]
C643 [7.3D]
C644 [7.3E]
C645 [3.2D]
C646 [3.2D]
C647 [15.1F]
C648 [7.2E]
C649 [3.2D]
C650 [3.2D]
C651 [7.2D]
C652 [15.3F]
C653 [7.3D]
C654 [7.3D]
C655 [7.2D]
C656 [15.2E]
C657 [3.2D]
C658 [3.2D]
C659 [15.3C]
C660 [13.2A]
C661 [15.2C]
C662 [14.2B]
C663 [16.3G]
C664 [17.3G]
C665 [17.3G]
C666 [17.1F]
C667 [17.1F]
C668 [3.1B]
C669 [14.2C]
C670 [13.2F]
C671 [17.4A]
C672 [14.2B]
C673 [9.5E]
C674 [9.5E]
C675 [16.3B]
C676 [14.2E]
C677 [9.4E]
C678 [9.4E]
C679 [16.2D]
C680 [9.4E]
C681 [9.4E]
C682 [16.3D]
C683 [16.3F]
C684 [16.4D]
C685 [16.4C]
C686 [17.3B]
C687 [17.2D]
C688 [17.3D]
C689 [17.3F]
C690 [17.4C]
C691 [8.5E]
C692 [8.4E]
C693 [8.4E]
C694 [17.4G]
C695 [17.4D]
C696 [8.5E]
C697 [8.4E]
C698 [8.4E]
CN1 [3.3C]
D1 [10.4E]
D2 [11.4E]
D3 [17.3F]
D4 [17.3F]
D5 [15.4A]
D6 [16.3E]
D7 [16.3F]
D8 [14.2D]
D501 [14.2G]
D502 [13.1E]
D503 [16.2C]
D504 [17.2C]
F1 [15.4D]
G1 [3.3E]
G1 [4.3F 4.3B]
G1 [8.3C]
G1 [9.3C]
G1 [10.3D]
G1 [11.3D]
G1 [12.3B 12.3E 12.2D 12.4D 12.3H 12.4B]
G1 [13.3C 13.2C 13.4C]
J1 [11.3H]
J2 [10.3G]
J3 [9.3C]
J4 [14.2H]
J5 [14.2E]
J6 [13.2F]
J7 [11.4H]
J501 [13.2A]
L1 [17.3F]
L2 [16.3F]
L3 [17.2F]
L4 [16.2F]
L501 [3.4G]
L502 [9.5E]
L503 [9.4E]
L504 [9.3E]
L505 [8.5E]
L506 [8.3E]
L507 [8.4E]
LB1 [15.1C]
LB2 [14.2D]
LB501 [4.5D]
LB502 [11.3B]
LB503 [10.3B]
LB504 [13.4A]
LB505 [11.2B]
LB506 [10.2B]
LB507 [15.1E]
M1 [6.4F 6.5D 6.2D]
M2 [6.4G 6.2B 6.5F]
M3 [6.2F 6.4G 6.5H]
M4 [6.4H 6.2G 6.5G]
M5 [5.2D 5.4F 5.5D]
M6 [5.4G 5.2B 5.5F]
M7 [5.4G 5.5H 5.2G]
M8 [5.4H 5.5G 5.2F]
MEC1 [14.3F]
MEC2 [14.3F]
MEC3 [9.4G]
MEC4 [14.3F]
MEC5 [14.4F]
MEC6 [14.4F]
MEC7 [14.4F]
Q1 [17.4E]
Q2 [17.5E]
Q3 [17.5F]
Q4 [17.4F]
Q5 [11.2F]
Q6 [11.3F]
Q7 [17.3E]
Q8 [17.3E]
Q9 [17.2E]
Q10 [16.3E 16.2E]
Q11 [14.2D]
Q12 [11.2G]
Q13 [11.2H]
Q14 [11.2E]
Q15 [11.3E]
Q501 [15.3G]
Q502 [15.3F]
Q503 [15.3C]
Q504 [15.2C]
Q505 [14.2B]
Q506 [17.4B]
Q507 [16.4B]
Q508 [16.4B]
Q509 [11.5C]
Q510 [17.4B]
R1 [15.4D]
R2 [10.4F]
R3 [11.4F]
R4 [8.1D]
R5 [11.4E]
R6 [17.4E]
R7 [17.4E]
R8 [17.4F]
R9 [17.4F]
R10 [10.4E]
R11 [8.2D]
R12 [10.4E]
R13 [11.2F]
R14 [11.3F]
R15 [11.4E]
R16 [8.2D]
R17 [9.2D]
R18 [8.2D]
R19 [9.2D]
R20 [9.2D]
R21 [8.3D]
R22 [9.3D]
R23 [9.1D]
R24 [8.3D]
R25 [9.3D]
R26 [17.3E]
R27 [11.2E]
R28 [11.3E]
R29 [17.3F]
R30 [15.4A]
R31 [15.4B]
R32 [16.2D]
R33 [16.3E]
R34 [16.3F]
R35 [15.4E]
R36 [14.3B]
R37 [14.3C]
R38 [15.4E]
R39 [14.4B]
R40 [14.3C]
R41 [14.4C]
R42 [14.3B]
R43 [15.4G]
R44 [13.3E]
R45 [15.4G]
R46 [6.4C]
R47 [6.4B]
R48 [6.4B]
R49 [6.4B]
R50 [14.4B]
R51 [14.4C]
R52 [4.4H]
R53 [14.4C]
R54 [14.5C]
R55 [13.4B]
R56 [13.4B]
R57 [10.3C]
R58 [14.4B]
R59 [14.5B]
R60 [6.3D]
R61 [6.4D]
R62 [6.3E]
R63 [6.4H]
R64 [6.3H]
R65 [6.5B]
R66 [6.5B]
R67 [6.5B]
R68 [6.5C]
R69 [5.4H]
R70 [5.3H]
R71 [4.4D]
R72 [5.3C]
R73 [5.3A]
R74 [5.3F]
R75 [5.3E]
R76 [14.2E]
R77 [11.2E]
R78 [11.3E]
R79 [11.2E]
R80 [11.3E]
R81 [11.2F]
R82 [11.3F]
R83 [11.2G]
R84 [11.2G]
R85 [11.2H]
R86 [11.3H]
R501 [4.3D]
R502 [5.5C]
R503 [5.4C]
R504 [4.4D]
R505 [5.5B]
R506 [5.4B]
R507 [5.5B]
R508 [5.4B]
R509 [5.5B]
R510 [5.4B]
R511 [4.3D]
R512 [4.4D]
R513 [4.4H]
R514 [6.3F]
R515 [4.4H]
R516 [3.5F]
R517 [4.5G]
R518 [4.5G]
R519 [4.5G]
R520 [3.5F]
R521 [8.3B]
R522 [8.4D]
R523 [8.4D]
R524 [8.5D]
R525 [9.3B]
R526 [8.3A]
R527 [8.3A]
R528 [9.4D]
R529 [9.4D]
R530 [9.5D]
R531 [11.3C]
R532 [13.5B]
R533 [4.3H]
R534 [15.3G]
R535 [15.3F]
R536 [6.3C]
R537 [4.3H]
R538 [13.2B]
R539 [13.2B]
R540 [13.2B]
R541 [15.3F]
R542 [15.3C]
R543 [15.3C]
R544 [15.3F]
R545 [15.2C]
R546 [15.2C]
R547 [15.2C]
R548 [13.2B]
R549 [17.4D]
R550 [17.5D]
R551 [17.5G]
R552 [17.4G]
R553 [13.2B]
R554 [13.2B]
R555 [17.4D]
R556 [17.5D]
R557 [17.5G]
R558 [17.4G]
R559 [14.2G]
R560 [14.2G]
R561 [13.2E]
R562 [13.1E]
R563 [13.1E]
R564 [13.1E]
R565 [14.2C]
R566 [14.2C]
R567 [14.2D]
R568 [17.4A]
R569 [14.1C]
R570 [17.4B]
R571 [9.5D]
R572 [16.2B]
R573 [9.4D]
R574 [16.2D]
R575 [17.2D]
R576 [16.3G]
R577 [16.4F]
R578 [9.4D]
R579 [16.4D]
R580 [16.4E]
R581 [16.3F]
R582 [16.4B]
R583 [16.4A]
R584 [16.3C]
R585 [17.2D]
R586 [16.4D]
R587 [17.2B]
R588 [17.3C]
R589 [17.3G]
R590 [8.5D]
R591 [6.4D]
R592 [9.4D]
R593 [17.4G]
R594 [11.4C]
R595 [11.4C]
R596 [11.4C]
R597 [11.4C]
R598 [17.4D]
R599 [17.3F]
R600 [17.4E]
R601 [17.4F]
R602 [17.4D]
R603 [11.5C]
R604 [11.5C]
R605 [11.4C]
R606 [17.4C]
TP1 [13.1C]
TP2 [13.2C]
TP3 [4.4G]
TP4 [4.4G]
TP5 [4.4C]
TP6 [4.4C]
U1 [8.2D 8.3D]
U1 [9.3D 9.2D]
U2 [15.4C]
U3 [15.5C]
U4 [15.4F]
U5 [13.3E]
U6 [15.5F]
U501 [15.3E]
U502 [13.1F]
U503 [14.2C]
U504 [16.3C]
U505 [17.3C]
Y1 [13.5C]
Y2 [13.5C]

| | |
|---|---|
| ASSEMBLY | BASE LEVEL GENERIC SCHEMATIC ONLY, COMMON & NO_STUFF ASSEMBLY NOTES AND BOM NOT FINAL |
| PAGE DETAIL | <edit here to insert page detail> |

ALL NVIDIA DESIGN SPECIFICATIONS, REFERENCE SPECIFICATIONS, REFERENCE BOARDS, FILES, DRAWINGS, DIAGNOSTICS, LISTS AND OTHER DOCUMENTS OR INFORMATION (TOGETHER AND SEPARATELY, 'MATERIALS') ARE BEING PROVIDED 'AS IS'. THE MATERIALS MAY CONTAIN KNOWN AND UNKNOWN VIOLATIONS OR DEVIATIONS OF INDUSTRY STANDARDS AND SPECIFICATIONS. NVIDIA MAKES NO WARRANTIES, EXPRESSED, IMPLIED, STATUTORY OR OTHERWISE WITH RESPECT TO THE MATERIALS OR OTHERWISE, AND EXPRESSLY DISCLAIMS ALL IMPLIED WARRANTIES INCLUDING, WITHOUT LIMITATION, THE WARRANTIES OF DESIGN, OF NONINFRINGEMENT, MERCHANTABILITY OR FITNESS FOR A PARTICULAR PURPOSE, OR ARISING FROM A COURSE OF DEALING, TRADE USAGE, TRADE PRACTICE, OR INDUSTRY STANDARDS.

NVIDIA CORPORATION
2701 SAN TOMAS EXPRESSWAY
SANTA CLARA, CA 95050, USA

| | | | |
|---|---|---|---|
| NV_PN | 600-11071-BASE-SCH | | |
| PCB REV | P1071-A01 | PAGE | <CON_PAGE_NUM> OF <CON_TOTAL_PAGES> |
| BOM REV | A | DATE | 01-APR-2010 |

0002998067 FOR RMA 仅供维修 CONFIDENTIAL PD(C)20110805001 ONLY