TABLE OF CONTENTS

Page	Description

ORGIN DSN ------ V231-10-20110215.DSN (V231-1.0 DSN update BOM 602-V231-010)

Page	Description

P3,5,6 刪除Memory Partittion A

P11 刪除Partittion A Decoupling

P18 刪除SLI

P19 刪除INFOROM / JTAG

P24 Add EXT_12V_ocnnector

P25 Change PEXVDD from SWITCH VR to LINEAR VR
Add FBVDD_power_source

P26 NVVDD change to two-pahse 上二下二

P27 Change 2-PIN FAN CONTROL- IC option

SKU	VARIANT	NVPN	ASSEMBLY
B	BASE	600-11062-base-100	P1062 BASE LEVEL GENERIC SCHEMATIC ONLY, COMMON & NO_STUFF ASSEMBLY NOTES AND BOM NOT FINAL
1	SKU0001	600-11062-0001-100	GF106-300 1536MB 64Mx16 BGA100 sDDR3, HDMI/VGA/DVI-I
2	<UNDEFINED>	<UNDEFINED>	<UNDEFINED>
3	<UNDEFINED>	<UNDEFINED>	<UNDEFINED>
4	<UNDEFINED>	<UNDEFINED>	<UNDEFINED>
5	<UNDEFINED>	<UNDEFINED>	<UNDEFINED>
6	<UNDEFINED>	<UNDEFINED>	<UNDEFINED>
7	<UNDEFINED>	<UNDEFINED>	<UNDEFINED>
8	<UNDEFINED>	<UNDEFINED>	<UNDEFINED>
9	<UNDEFINED>	<UNDEFINED>	<UNDEFINED>
10	<UNDEFINED>	<UNDEFINED>	<UNDEFINED>
11	<UNDEFINED>	<UNDEFINED>	<UNDEFINED>
12	<UNDEFINED>	<UNDEFINED>	<UNDEFINED>
13	<UNDEFINED>	<UNDEFINED>	<UNDEFINED>
14	<UNDEFINED>	<UNDEFINED>	<UNDEFINED>
15	<UNDEFINED>	<UNDEFINED>	<UNDEFINED>

00029980楊婉菲 MSI CONFIDENTIAL
FOR RMA(丁德基) RD(C)20110623001 ONLY

ASSEMBLY	P1062 BASE LEVEL GENERIC SCHEMATIC ONLY, COMMON & NO_STUFF ASSEMBLY NOTES AND BOM NOT FINAL
PAGE DETAIL	Table of Contents

ALL NVIDIA DESIGN SPECIFICATIONS, REFERENCE SPECIFICATIONS, REFERENCE BOARDS, FILES, DRAWINGS, DIAGNOSTICS, LISTS AND OTHER DOCUMENTS OR INFORMATION (TOGETHER AND SEPARATELY, "MATERIALS") ARE BEING PROVIDED 'AS IS'. THE MATERIALS MAY CONTAIN KNOWN AND UNKNOWN VIOLATIONS OR DEVIATIONS OF INDUSTRY STANDARDS AND SPECIFICATIONS. NVIDIA MAKES NO WARRANTIES, EXPRESSED, IMPLIED, STATUTORY OR OTHERWISE WITH RESPECT TO THE MATERIALS OR OTHERWISE, AND EXPRESSLY DISCLAIMS ALL IMPLIED WARRANTIES INCLUDING, WITHOUT LIMITATION, THE WARRANTIES OF DESIGN, OF NONINFRINGEMENT, MERCHANTABILITY OR FITNESS FOR A PARTICULAR PURPOSE, OR ARISING FROM A COURSE OF DEALING, TRADE USAGE, TRADE PRACTICE, OR INDUSTRY STANDARDS.

NVIDIA CORPORATION
2701 SAN TOMAS EXPRESSWAY
SANTA CLARA, CA 95050, USA

NV_PN	600-11062-base-100		
PCB REV	P1062-B00	PAGE	
BOM REV	A	DATE	06-APR-2010

PCI Express

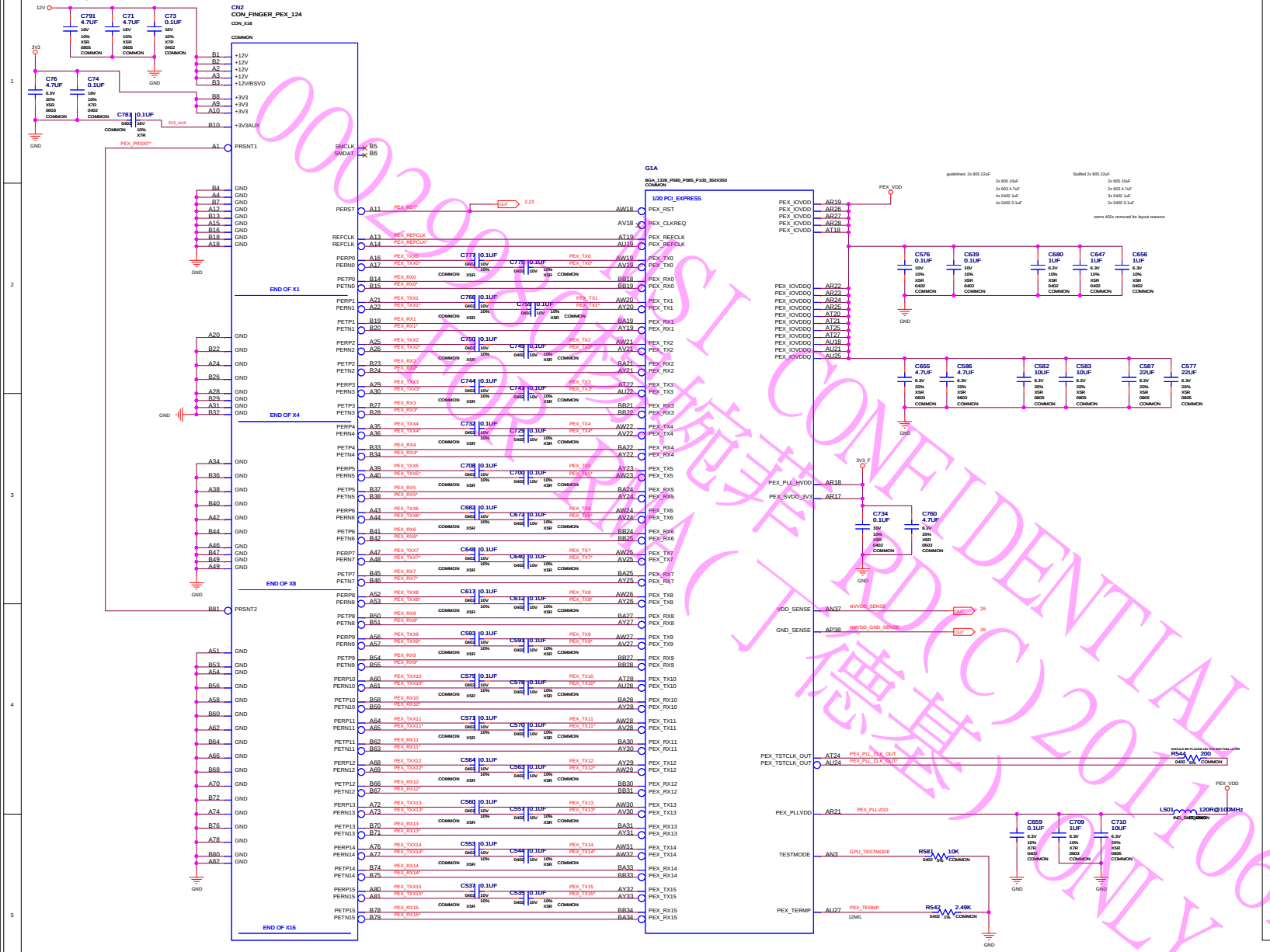

NET	NV_CRITICAL	NV_IMPEDANCE	DIFFPAIR
PEX_REFCLK	1	90DIFF	PEX_REFCLK
PEX_REFCLK*	1	90DIFF	PEX_REFCLK
PEX_TX0	1	90DIFF	PEX_TX0
PEX_TX0*	1	90DIFF	PEX_TX0
PEX_TX1	1	90DIFF	PEX_TX1
PEX_TX1*	1	90DIFF	PEX_TX1
PEX_TX2	1	90DIFF	PEX_TX2
PEX_TX2*	1	90DIFF	PEX_TX2
PEX_TX3	1	90DIFF	PEX_TX3
PEX_TX3*	1	90DIFF	PEX_TX3
PEX_TX4	1	90DIFF	PEX_TX4
PEX_TX4*	1	90DIFF	PEX_TX4
PEX_TX5	1	90DIFF	PEX_TX5
PEX_TX5*	1	90DIFF	PEX_TX5
PEX_TX6	1	90DIFF	PEX_TX6
PEX_TX6*	1	90DIFF	PEX_TX6
PEX_TX7	1	90DIFF	PEX_TX7
PEX_TX7*	1	90DIFF	PEX_TX7
PEX_TX8	1	90DIFF	PEX_TX8
PEX_TX8*	1	90DIFF	PEX_TX8
PEX_TX9	1	90DIFF	PEX_TX9
PEX_TX9*	1	90DIFF	PEX_TX9
PEX_TX10	1	90DIFF	PEX_TX10
PEX_TX10*	1	90DIFF	PEX_TX10
PEX_TX11	1	90DIFF	PEX_TX11
PEX_TX11*	1	90DIFF	PEX_TX11
PEX_TX12	1	90DIFF	PEX_TX12
PEX_TX12*	1	90DIFF	PEX_TX12
PEX_TX13	1	90DIFF	PEX_TX13
PEX_TX13*	1	90DIFF	PEX_TX13
PEX_TX14	1	90DIFF	PEX_TX14
PEX_TX14*	1	90DIFF	PEX_TX14
PEX_TX15	1	90DIFF	PEX_TX15
PEX_TX15*	1	90DIFF	PEX_TX15
PEX_RX0	1	90DIFF	PEX_RX0
PEX_RX0*	1	90DIFF	PEX_RX0
PEX_RX1	1	90DIFF	PEX_RX1
PEX_RX1*	1	90DIFF	PEX_RX1
PEX_RX2	1	90DIFF	PEX_RX2
PEX_RX2*	1	90DIFF	PEX_RX2
PEX_RX3	1	90DIFF	PEX_RX3
PEX_RX3*	1	90DIFF	PEX_RX3
PEX_RX4	1	90DIFF	PEX_RX4
PEX_RX4*	1	90DIFF	PEX_RX4
PEX_RX5	1	90DIFF	PEX_RX5
PEX_RX5*	1	90DIFF	PEX_RX5
PEX_RX6	1	90DIFF	PEX_RX6
PEX_RX6*	1	90DIFF	PEX_RX6
PEX_RX7	1	90DIFF	PEX_RX7
PEX_RX7*	1	90DIFF	PEX_RX7
PEX_RX8	1	90DIFF	PEX_RX8
PEX_RX8*	1	90DIFF	PEX_RX8
PEX_RX9	1	90DIFF	PEX_RX9
PEX_RX9*	1	90DIFF	PEX_RX9
PEX_RX10	1	90DIFF	PEX_RX10
PEX_RX10*	1	90DIFF	PEX_RX10
PEX_RX11	1	90DIFF	PEX_RX11
PEX_RX11*	1	90DIFF	PEX_RX11
PEX_RX12	1	90DIFF	PEX_RX12
PEX_RX12*	1	90DIFF	PEX_RX12
PEX_RX13	1	90DIFF	PEX_RX13
PEX_RX13*	1	90DIFF	PEX_RX13
PEX_RX14	1	90DIFF	PEX_RX14
PEX_RX14*	1	90DIFF	PEX_RX14
PEX_RX15	1	90DIFF	PEX_RX15
PEX_RX15*	1	90DIFF	PEX_RX15
PEX_TX0	1	90DIFF	PEX_TX0
PEX_TX0*	1	90DIFF	PEX_TX0
PEX_TX1	1	90DIFF	PEX_TX1
PEX_TX1*	1	90DIFF	PEX_TX1
PEX_TX2	1	90DIFF	PEX_TX2
PEX_TX2*	1	90DIFF	PEX_TX2
PEX_TX3	1	90DIFF	PEX_TX3
PEX_TX3*	1	90DIFF	PEX_TX3
PEX_TX4	1	90DIFF	PEX_TX4
PEX_TX4*	1	90DIFF	PEX_TX4
PEX_TX5	1	90DIFF	PEX_TX5
PEX_TX5*	1	90DIFF	PEX_TX5
PEX_TX6	1	90DIFF	PEX_TX6
PEX_TX6*	1	90DIFF	PEX_TX6
PEX_TX7	1	90DIFF	PEX_TX7
PEX_TX7*	1	90DIFF	PEX_TX7
PEX_TX8	1	90DIFF	PEX_TX8
PEX_TX8*	1	90DIFF	PEX_TX8
PEX_TX9	1	90DIFF	PEX_TX9
PEX_TX9*	1	90DIFF	PEX_TX9
PEX_TX10	1	90DIFF	PEX_TX10
PEX_TX10*	1	90DIFF	PEX_TX10
PEX_TX11	1	90DIFF	PEX_TX11
PEX_TX11*	1	90DIFF	PEX_TX11
PEX_TX12	1	90DIFF	PEX_TX12
PEX_TX12*	1	90DIFF	PEX_TX12
PEX_TX13	1	90DIFF	PEX_TX13
PEX_TX13*	1	90DIFF	PEX_TX13
PEX_TX14	1	90DIFF	PEX_TX14
PEX_TX14*	1	90DIFF	PEX_TX14
PEX_TX15	1	90DIFF	PEX_TX15
PEX_TX15*	1	90DIFF	PEX_TX15
PEX_PLL_CLK_OUT	1	90DIFF	PEX_PLL_CLK_OUT
PEX_PLL_CLK_OUT*	1	90DIFF	PEX_PLL_CLK_OUT
PEX_RST*		50OHM	
PEX_PRSNT*		50OHM	

NET	VOLTAGE	MAX_CURRENT	MIN_WIDTH
PEX_PLLVDD	1.05V	0.15A	0.3mm

ASSEMBLY	P1062 BASE LEVEL GENERIC SCHEMATIC ONLY, COMMON & NO_STUFF ASSEMBLY NOTES AND BOM NOT FINAL
PAGE DETAIL	PCI Express

ALL NVIDIA DESIGN SPECIFICATIONS, REFERENCE SPECIFICATIONS, REFERENCE BOARDS, FILES, DRAWINGS, DIAGNOSTICS, LISTS AND OTHER DOCUMENTS OR INFORMATION (TOGETHER AND SEPARATELY, 'MATERIALS') ARE BEING PROVIDED 'AS IS'. THE MATERIALS MAY CONTAIN KNOWN AND UNKNOWN VIOLATIONS OR DEVIATIONS OF INDUSTRY STANDARDS AND SPECIFICATIONS. NVIDIA MAKES NO WARRANTIES, EXPRESSED, IMPLIED, STATUTORY OR OTHERWISE WITH RESPECT TO THE MATERIALS OR OTHERWISE, AND EXPRESSLY DISCLAIMS ALL IMPLIED WARRANTIES INCLUDING, WITHOUT LIMITATION, THE WARRANTIES OF DESIGN, OF NONINFRINGEMENT, MERCHANTABILITY OR FITNESS FOR A PARTICULAR PURPOSE, OR ARISING FROM A COURSE OF DEALING, TRADE USAGE, TRADE PRACTICE, OR INDUSTRY STANDARDS.

NVIDIA CORPORATION
2701 SAN TOMAS EXPRESSWAY
SANTA CLARA, CA 95050, USA

NV_PN	600-11062-base-100		
PCB REV	P1062-B00	PAGE	
BOM REV	A	DATE	06-APR-2010

NVIDIA CONFIDENTIAL
FOR NDC(C)2011062300 ONLY
仅供NDC(C)2011062300使用

MEMORY: GPU FB Partition A and B

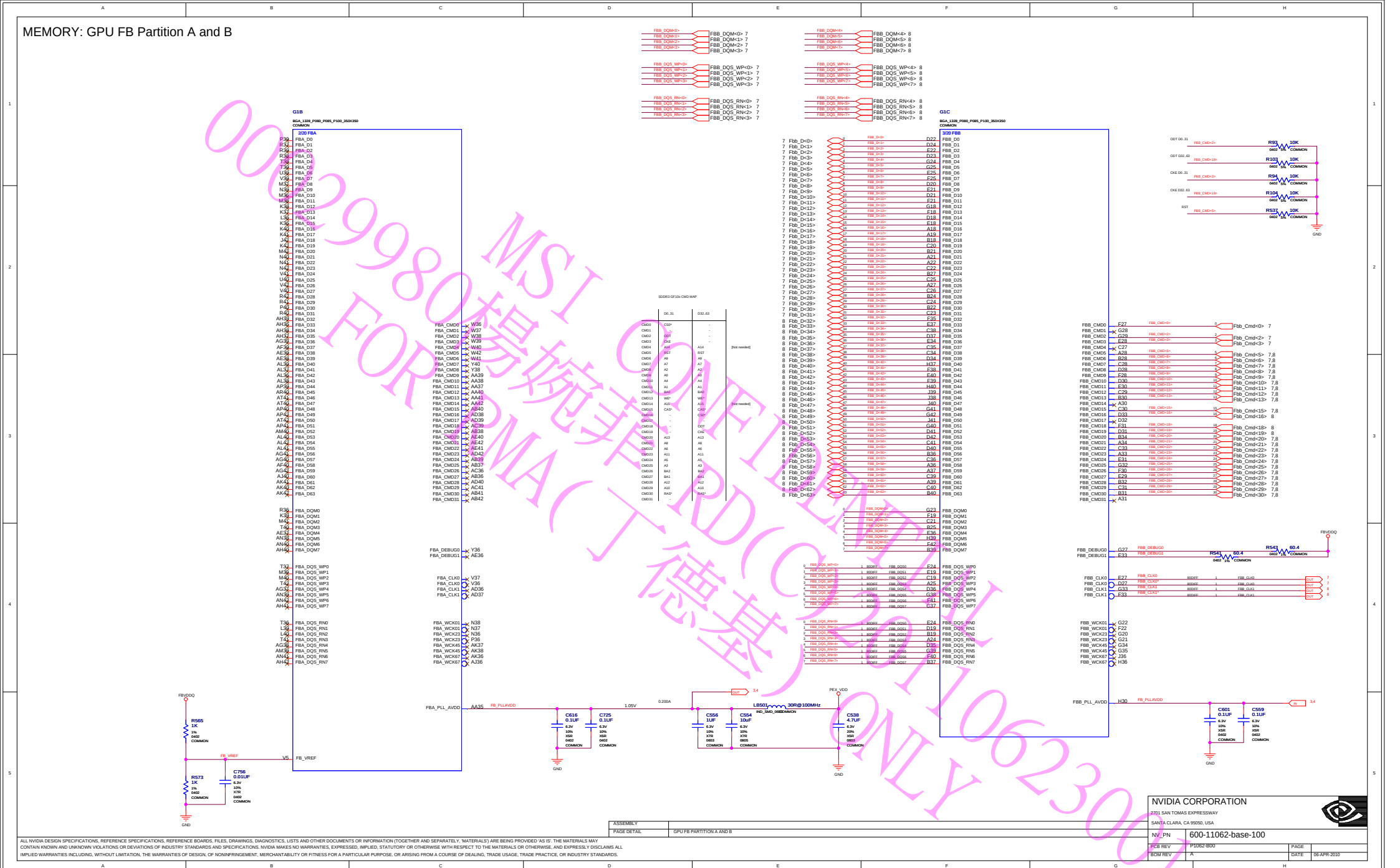

MSI CONFIDENTIAL
FOR MSI R&D(台北)1062301 ONLY
0020998 穆德詩 (德基)

ASSEMBLY	
PAGE DETAIL	GPU FB PARTITION A AND B

ALL NVIDIA DESIGN SPECIFICATIONS, REFERENCE SPECIFICATIONS, REFERENCE BOARDS, FILES, DRAWINGS, DIAGNOSTICS, LISTS AND OTHER DOCUMENTS OR INFORMATION (TOGETHER AND SEPARATELY, 'MATERIALS') ARE BEING PROVIDED 'AS IS'. THE MATERIALS MAY CONTAIN KNOWN AND UNKNOWN VIOLATIONS OR DEVIATIONS OF INDUSTRY STANDARDS AND SPECIFICATIONS. NVIDIA MAKES NO WARRANTIES, EXPRESSED, IMPLIED, STATUTORY OR OTHERWISE WITH RESPECT TO THE MATERIALS OR OTHERWISE, AND EXPRESSLY DISCLAIMS ALL IMPLIED WARRANTIES INCLUDING, WITHOUT LIMITATION, THE WARRANTIES OF DESIGN, OF NONINFRINGEMENT, MERCHANTABILITY OR FITNESS FOR A PARTICULAR PURPOSE, OR ARISING FROM A COURSE OF DEALING, TRADE USAGE, TRADE PRACTICE, OR INDUSTRY STANDARDS.

NVIDIA CORPORATION
2701 SAN TOMAS EXPRESSWAY
SANTA CLARA, CA 95050, USA

NV_PN	600-11062-base-100		
PCB REV	P1062-B00	PAGE	
BOM REV	A	DATE	06-APR-2010

MEMORY: GPU FB Partition C AND GPU FB Decap

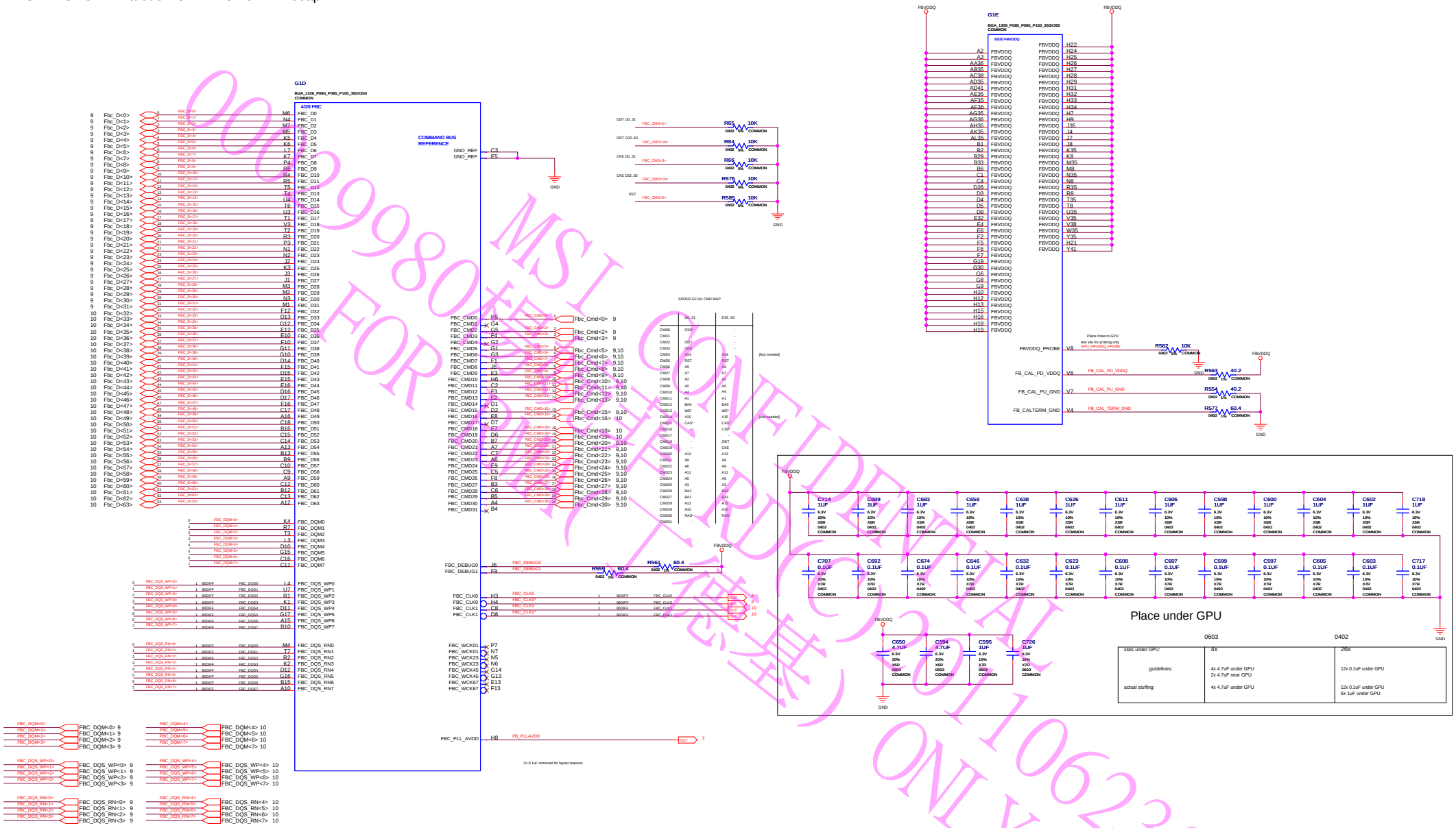

ASSEMBLY	P1062 BASE LEVEL GENERIC SCHEMATIC ONLY, COMMON & NO_STUFF ASSEMBLY NOTES AND BOM NOT FINAL
PAGE DETAIL	GPU FB Partition C and GPU FB Decap

ALL NVIDIA DESIGN SPECIFICATIONS, REFERENCE SPECIFICATIONS, REFERENCE BOARDS, FILES, DRAWINGS, DIAGNOSTICS, LISTS AND OTHER DOCUMENTS OR INFORMATION (TOGETHER AND SEPARATELY, 'MATERIALS') ARE BEING PROVIDED 'AS IS'. THE MATERIALS MAY CONTAIN KNOWN AND UNKNOWN VIOLATIONS OR DEVIATIONS OF INDUSTRY STANDARDS AND SPECIFICATIONS. NVIDIA MAKES NO WARRANTIES, EXPRESSED, IMPLIED, STATUTORY OR OTHERWISE WITH RESPECT TO THE MATERIALS OR OTHERWISE, AND EXPRESSLY DISCLAIMS ALL IMPLIED WARRANTIES INCLUDING, WITHOUT LIMITATION, THE WARRANTIES OF DESIGN, OF NONINFRINGEMENT, MERCHANTABILITY OR FITNESS FOR A PARTICULAR PURPOSE, OR ARISING FROM A COURSE OF DEALING, TRADE USAGE, TRADE PRACTICE, OR INDUSTRY STANDARDS.

NVIDIA CORPORATION
2701 SAN TOMAS EXPRESSWAY
SANTA CLARA, CA 95050, USA

NV_PN	600-11062-base-100		
PCB REV	P1062-B00	PAGE	
BOM REV	A	DATE	06-APR-2010

MSI CONFIDENTIAL
FOR MSI 研究發展 ONLY
0009980 (2010/10/6 23:01)

Memory Lower Partition A

DISABLE PARTITON A

	LOWER 0..31	UPPER 32..63
*MR36	RAS*	RAS*
CMD15	CAS*	CAS*
CMD12	WE*	WE*
CMD0	CS0*	N/A
CMD1	N/A	N/A
CMD16	N/A	CS0*
CMD17	N/A	N/A
CMD9	A0	A0
CMD13	A1	A1
CMD8	A2	A2
CMD10	A3	A3
CMD24	A4	A4
CMD29	A5	A5
CMD22	A6	A6
CMD7	A7	A7
CMD21	A8	A8
CMD6	A9	A9
CMD19	A10	A10
CMD23	A11	A11
CMD28	A12	A12
CMD20	A13	A13
CMD4	A14	A14
CMD14	A15	A15
CMD32	BA0	BA0
CMD27	BA1	BA1
CMD26	BA2	BA2
CMD3	CKE	N/A
CMD18	N/A	CKE
CMD2	ODT	N/A
CMD38	N/A	ODT
CMD5	RST	RST

IN USE ON THIS PAGE

NET	DIFFPAIR	MIN_LINE_WIDTH	CRITICAL	VOLTAGE

ASSEMBLY	P1062 BASE LEVEL GENERIC SCHEMATIC ONLY, COMMON & NO_STUFF ASSEMBLY NOTES AND BOM NOT FINAL
PAGE DETAIL	Memory Lower Partition A

ALL NVIDIA DESIGN SPECIFICATIONS, REFERENCE SPECIFICATIONS, REFERENCE BOARDS, FILES, DRAWINGS, DIAGNOSTICS, LISTS AND OTHER DOCUMENTS OR INFORMATION (TOGETHER AND SEPARATELY, 'MATERIALS') ARE BEING PROVIDED 'AS IS'. THE MATERIALS MAY CONTAIN KNOWN AND UNKNOWN VIOLATIONS OR DEVIATIONS OF INDUSTRY STANDARDS AND SPECIFICATIONS. NVIDIA MAKES NO WARRANTIES, EXPRESSED, IMPLIED, STATUTORY OR OTHERWISE WITH RESPECT TO THE MATERIALS OR OTHERWISE, AND EXPRESSLY DISCLAIMS ALL IMPLIED WARRANTIES INCLUDING, WITHOUT LIMITATION, THE WARRANTIES OF DESIGN, OF NONINFRINGEMENT, MERCHANTABILITY OR FITNESS FOR A PARTICULAR PURPOSE, OR ARISING FROM A COURSE OF DEALING, TRADE USAGE, TRADE PRACTICE, OR INDUSTRY STANDARDS.

NVIDIA CORPORATION
2701 SAN TOMAS EXPRESSWAY
SANTA CLARA, CA 95050, USA

NV_PN	600-11062-base-100		
PCB REV	P1062-B00	PAGE	
BOM REV	A	DATE	06-APR-2010

MSI CONFIDENTIAL
00029980楊婉菲 RD(C)20110623001
FOR RMA(丁德基) ONLY

Memory Upper Partition A

MSI CONFIDENTIAL
00029980楊婉菲 RD(C)20110623001
FOR RMA(丁德基) ONLY

	LOWER 0..31	UPPER 32..63
CMD30	RAS*	RAS*
CMD31	CAS*	CAS*
CMD13	WE*	WE*
CMD0	CS0*	N/A
CMD1	N/A	N/A
CMD16	N/A	CS0*
CMD17	N/A	N/A
CMD8	A0	A0
CMD11	A1	A1
CMD9	A2	A2
CMD20	A3	A3
CMD10	A4	A4
CMD24	A5	A5
CMD22	A6	A6
CMD7	A7	A7
CMD21	A8	A8
CMD5	A9	A9
CMD29	A10	A10
CMD23	A11	A11
CMD28	A12	A12
CMD25	A13	A13
CMD4	A14	A14
CMD14	A15	A15
CMD12	BA0	BA0
CMD27	BA1	BA1
CMD26	BA2	BA2
CMD3	CKE	N/A
CMD19	N/A	CKE
CMD2	ODT	N/A
CMD18	N/A	ODT
CMD6	RST	RST

NET	MIN_LINE_WIDTH	VOLTAGE

IN USE ON THIS PAGE

ASSEMBLY	P1062 BASE LEVEL GENERIC SCHEMATIC ONLY, COMMON & NO_STUFF ASSEMBLY NOTES AND BOM NOT FINAL
PAGE DETAIL	Memory Upper Partition A

ALL NVIDIA DESIGN SPECIFICATIONS, REFERENCE SPECIFICATIONS, REFERENCE BOARDS, FILES, DRAWINGS, DIAGNOSTICS, LISTS AND OTHER DOCUMENTS OR INFORMATION (TOGETHER AND SEPARATELY, 'MATERIALS') ARE BEING PROVIDED 'AS IS'. THE MATERIALS MAY CONTAIN KNOWN AND UNKNOWN VIOLATIONS OR DEVIATIONS OF INDUSTRY STANDARDS AND SPECIFICATIONS. NVIDIA MAKES NO WARRANTIES, EXPRESSED, IMPLIED, STATUTORY OR OTHERWISE WITH RESPECT TO THE MATERIALS OR OTHERWISE, AND EXPRESSLY DISCLAIMS ALL IMPLIED WARRANTIES INCLUDING, WITHOUT LIMITATION, THE WARRANTIES OF DESIGN, OF NONINFRINGEMENT, MERCHANTABILITY OR FITNESS FOR A PARTICULAR PURPOSE, OR ARISING FROM A COURSE OF DEALING, TRADE USAGE, TRADE PRACTICE, OR INDUSTRY STANDARDS.

NVIDIA CORPORATION
2701 SAN TOMAS EXPRESSWAY
SANTA CLARA, CA 95050, USA

NV_PN	600-11062-base-100		
PCB REV	P1062-B00	PAGE	
BOM REV	A	DATE	06-APR-2010

Memory Lower Partition B

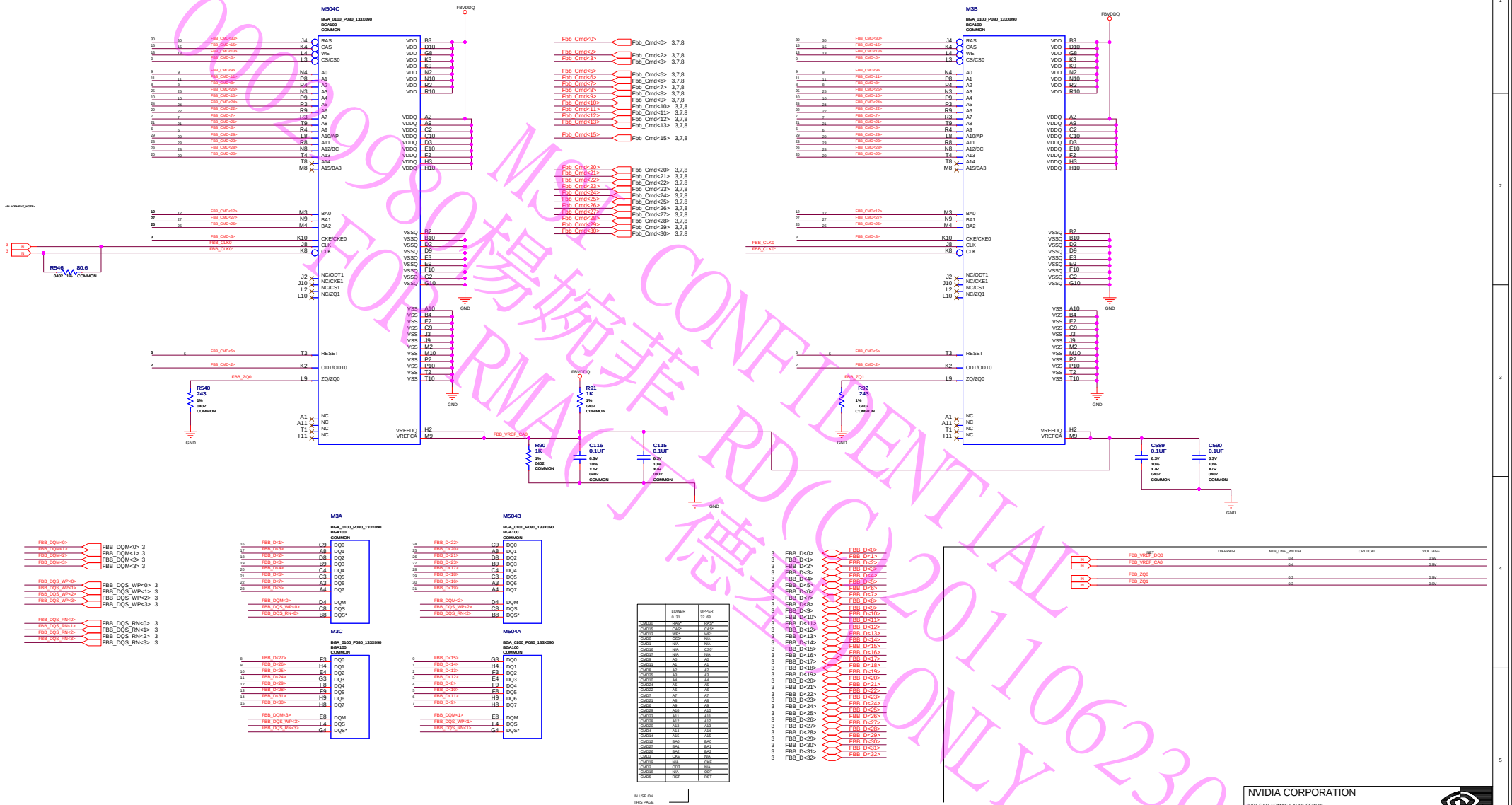

	LOWER 0..31	UPPER 32..63
*MC30	RAS*	RAS*
CMD15	CAS*	CAS*
CMD12	WE*	WE*
CMD0	CS0*	N/A
CMD1	N/A	N/A
CMD16	N/A	CS1*
CMD17	N/A	N/A
CMD9	A0	A0
CMD13	A1	A1
CMD8	A2	A2
CMD35	A3	A3
CMD34	A4	A4
CMD29	A5	A5
CMD22	A6	A6
CMD7	A7	A7
CMD21	A8	A8
CMD6	A9	A9
CMD19	A10	A10
CMD23	A11	A11
CMD28	A12	A12
CMD20	A13	A13
CMD14	A14	A14
CMD24	A15	A15
CMD32	BA0	BA0
CMD27	BA1	BA1
CMD26	BA2	BA2
CMD3	CKE	N/A
CMD10	N/A	CKE
CMD2	ODT	N/A
CMD18	N/A	ODT
CMD5	RST	RST

IN USE ON THIS PAGE

NET	DIFFPAIR	MIN_LINE_WIDTH	CRITICAL	VOLTAGE
FBB_VREF_DQ0		0.4		0.9V
FBB_VREF_CA0		0.4		0.9V
FBB_ZQ0		0.3		0.9V
FBB_ZQ1		0.3		0.9V

ASSEMBLY	P1062 BASE LEVEL GENERIC SCHEMATIC ONLY, COMMON & NO_STUFF ASSEMBLY NOTES AND BOM NOT FINAL
PAGE DETAIL	Memory Lower Partition B

ALL NVIDIA DESIGN SPECIFICATIONS, REFERENCE SPECIFICATIONS, REFERENCE BOARDS, FILES, DRAWINGS, DIAGNOSTICS, LISTS AND OTHER DOCUMENTS OR INFORMATION (TOGETHER AND SEPARATELY, 'MATERIALS') ARE BEING PROVIDED 'AS IS'. THE MATERIALS MAY CONTAIN KNOWN AND UNKNOWN VIOLATIONS OR DEVIATIONS OF INDUSTRY STANDARDS AND SPECIFICATIONS. NVIDIA MAKES NO WARRANTIES, EXPRESSED, IMPLIED, STATUTORY OR OTHERWISE WITH RESPECT TO THE MATERIALS OR OTHERWISE, AND EXPRESSLY DISCLAIMS ALL IMPLIED WARRANTIES INCLUDING, WITHOUT LIMITATION, THE WARRANTIES OF DESIGN, OF NONINFRINGEMENT, MERCHANTABILITY OR FITNESS FOR A PARTICULAR PURPOSE, OR ARISING FROM A COURSE OF DEALING, TRADE USAGE, TRADE PRACTICE, OR INDUSTRY STANDARDS.

NVIDIA CORPORATION
2701 SAN TOMAS EXPRESSWAY
SANTA CLARA, CA 95050, USA

NV_PN	600-11062-base-100		
PCB REV	P1062-B00	PAGE	
BOM REV	A	DATE	06-APR-2010

MSI CONFIDENTIAL
FOR RMA 厂德专用 RD(C)20110623001 ONLY

Memory Upper Partition B

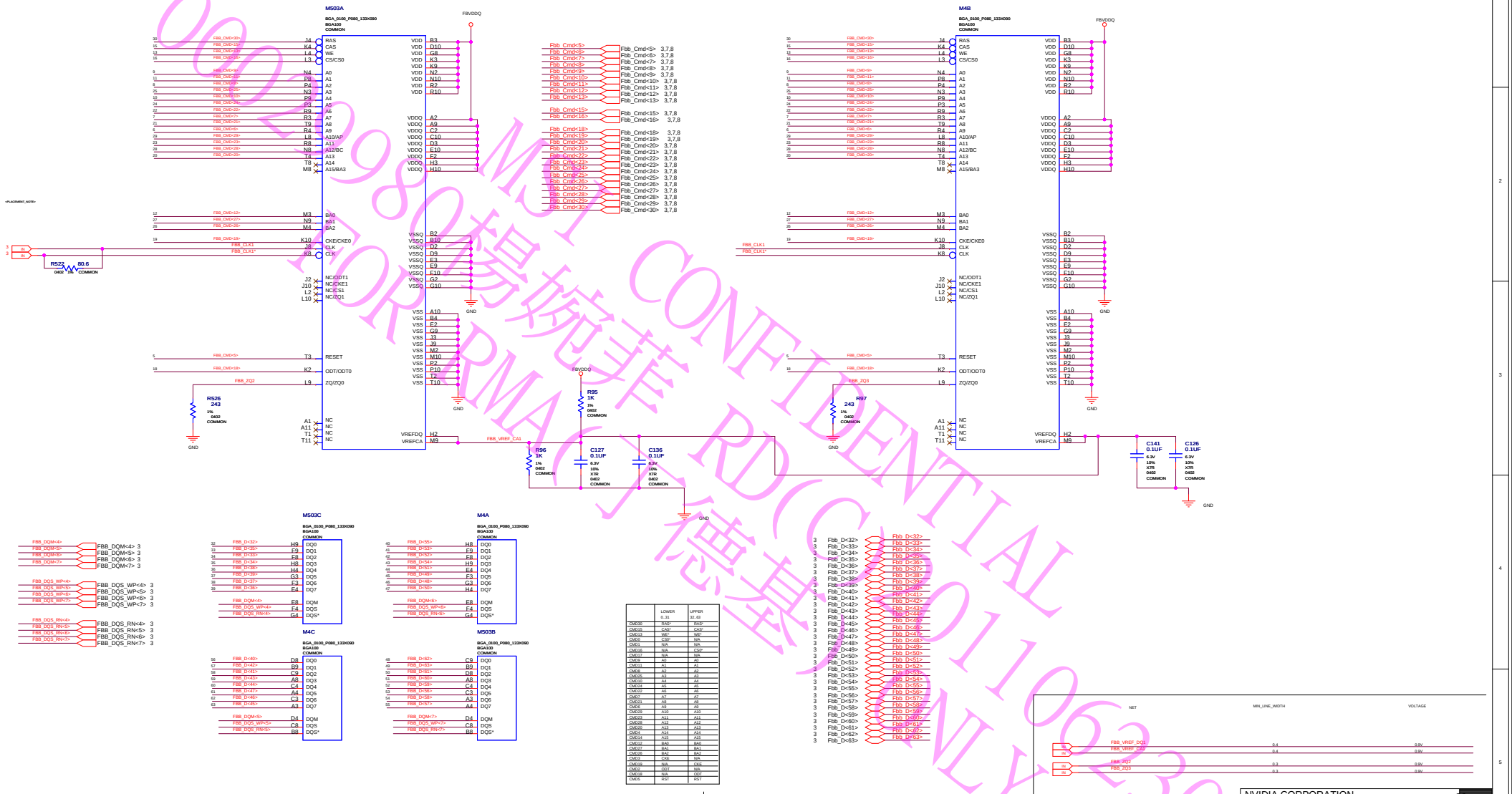

	LOWER 0.31	UPPER 32.63
*MC30	RAS*	RAS*
CMD11	CAS*	CAS*
CMD12	WE*	WE*
CMD0	CSP	N/A
CMD1	N/A	N/A
CMD16	N/A	CSP
CMD17	N/A	N/A
CMD9	A0	A0
CMD13	A1	A1
CMD8	A2	A2
CMD15	A3	A3
CMD14	A4	A4
CMD29	A5	A5
CMD28	A6	A6
CMD22	A7	A7
CMD23	A8	A8
CMD6	A9	A9
CMD19	A10	A10
CMD21	A11	A11
CMD20	A12	A12
CMD24	A13	A13
CMD14	A14	A14
CMD18	A15	A15
CMD12	BA0	BA0
CMD27	BA1	BA1
CMD26	BA2	BA2
CMD3	CKE	N/A
CMD10	N/A	CKE
CMD2	ODT	N/A
CMD10	N/A	ODT
CMD5	RST	RST

IN USE ON THIS PAGE

ASSEMBLY	P1062 BASE LEVEL GENERIC SCHEMATIC ONLY, COMMON & NO_STUFF ASSEMBLY NOTES AND BOM NOT FINAL
PAGE DETAIL	Memory Upper Partition B

ALL NVIDIA DESIGN SPECIFICATIONS, REFERENCE SPECIFICATIONS, REFERENCE BOARDS, FILES, DRAWINGS, DIAGNOSTICS, LISTS AND OTHER DOCUMENTS OR INFORMATION (TOGETHER AND SEPARATELY, 'MATERIALS') ARE BEING PROVIDED 'AS IS'. THE MATERIALS MAY CONTAIN KNOWN AND UNKNOWN VIOLATIONS OR DEVIATIONS OF INDUSTRY STANDARDS AND SPECIFICATIONS. NVIDIA MAKES NO WARRANTIES, EXPRESSED, IMPLIED, STATUTORY OR OTHERWISE WITH RESPECT TO THE MATERIALS OR OTHERWISE, AND EXPRESSLY DISCLAIMS ALL IMPLIED WARRANTIES INCLUDING, WITHOUT LIMITATION, THE WARRANTIES OF DESIGN, OF NONINFRINGEMENT, MERCHANTABILITY OR FITNESS FOR A PARTICULAR PURPOSE, OR ARISING FROM A COURSE OF DEALING, TRADE USAGE, TRADE PRACTICE, OR INDUSTRY STANDARDS.

NVIDIA CORPORATION
2701 SAN TOMAS EXPRESSWAY
SANTA CLARA, CA 95050, USA

NV_PN	600-11062-base-100		
PCB REV	P1062-B00	PAGE	
BOM REV	A	DATE	06-APR-2010

MSI CONFIDENTIAL
FOR RD(C)部 RMA 專用 001106230Y

Memory Lower Partition C

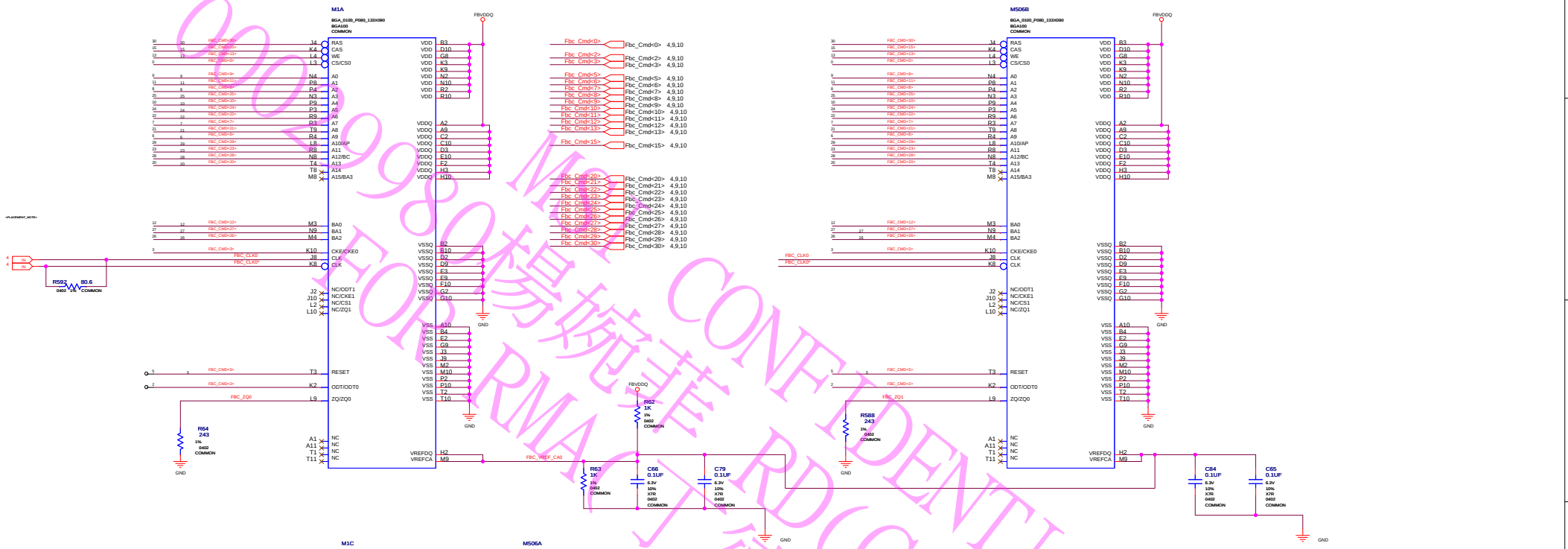

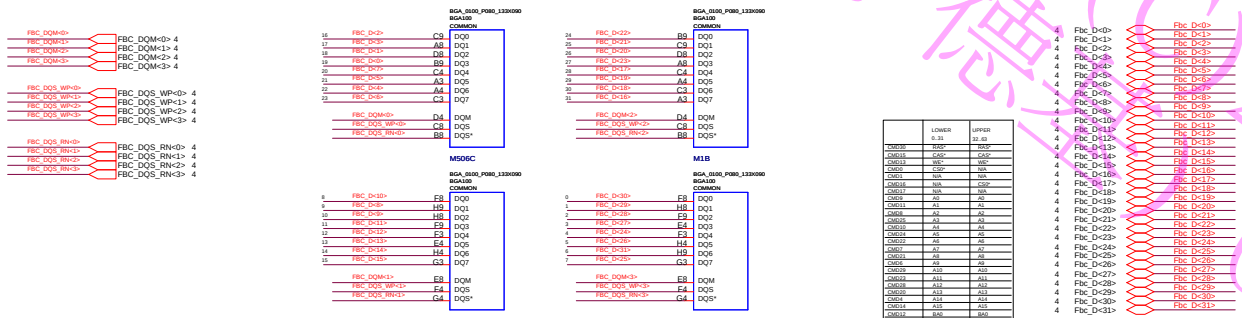

	LOWER 0..31	UPPER 32..63
*MC30	RAS*	RAS*
CMD31	CAS*	CAS*
CMD12	WE*	WE*
CMD0	CS0*	N/A
CMD1	N/A	N/A
CMD16	N/A	CS1*
CMD17	N/A	N/A
CMD9	A0	A0
CMD13	A1	A1
CMD8	A2	A2
CMD15	A3	A3
CMD10	A4	A4
CMD24	A5	A5
CMD22	A6	A6
CMD7	A7	A7
CMD21	A8	A8
CMD6	A9	A9
CMD19	A10	A10
CMD23	A11	A11
CMD28	A12	A12
CMD20	A13	A13
CMD14	A14	A14
CMD14	A15	A15
CMD12	BA0	BA0
CMD27	BA1	BA1
CMD26	BA2	BA2
CMD3	CKE	N/A
CMD18	N/A	CKE
CMD2	ODT	N/A
CMD18	N/A	ODT
CMD5	RST	RST

IN USE ON THIS PAGE

NET	DIFFPAIR	MIN_LINE_WIDTH	CRITICAL	VOLTAGE
FBC_VREF_DQ0		0.4		0.9V
FBC_VREF_CA0		0.4		0.9V
FBC_ZQ0		0.3		0.9V
FBC_ZQ1		0.3		0.9V

ASSEMBLY	P1062 BASE LEVEL GENERIC SCHEMATIC ONLY, COMMON & NO_STUFF ASSEMBLY NOTES AND BOM NOT FINAL
PAGE DETAIL	Memory Lower Partition C

ALL NVIDIA DESIGN SPECIFICATIONS, REFERENCE SPECIFICATIONS, REFERENCE BOARDS, FILES, DRAWINGS, DIAGNOSTICS, LISTS AND OTHER DOCUMENTS OR INFORMATION (TOGETHER AND SEPARATELY, 'MATERIALS') ARE BEING PROVIDED 'AS IS'. THE MATERIALS MAY CONTAIN KNOWN AND UNKNOWN VIOLATIONS OR DEVIATIONS OF INDUSTRY STANDARDS AND SPECIFICATIONS. NVIDIA MAKES NO WARRANTIES, EXPRESSED, IMPLIED, STATUTORY OR OTHERWISE WITH RESPECT TO THE MATERIALS OR OTHERWISE, AND EXPRESSLY DISCLAIMS ALL IMPLIED WARRANTIES INCLUDING, WITHOUT LIMITATION, THE WARRANTIES OF DESIGN, OF NONINFRINGEMENT, MERCHANTABILITY OR FITNESS FOR A PARTICULAR PURPOSE, OR ARISING FROM A COURSE OF DEALING, TRADE USAGE, TRADE PRACTICE, OR INDUSTRY STANDARDS.

NVIDIA CORPORATION
2701 SAN TOMAS EXPRESSWAY
SANTA CLARA, CA 95050, USA

NV_PN	600-11062-base-100		
PCB REV	P1062-B00	PAGE	
BOM REV	A	DATE	06-APR-2010

007998 FOR RMA 德 CONFIDENTIAL RD(G)2011062300 ONLY

Memory Upper Partition C

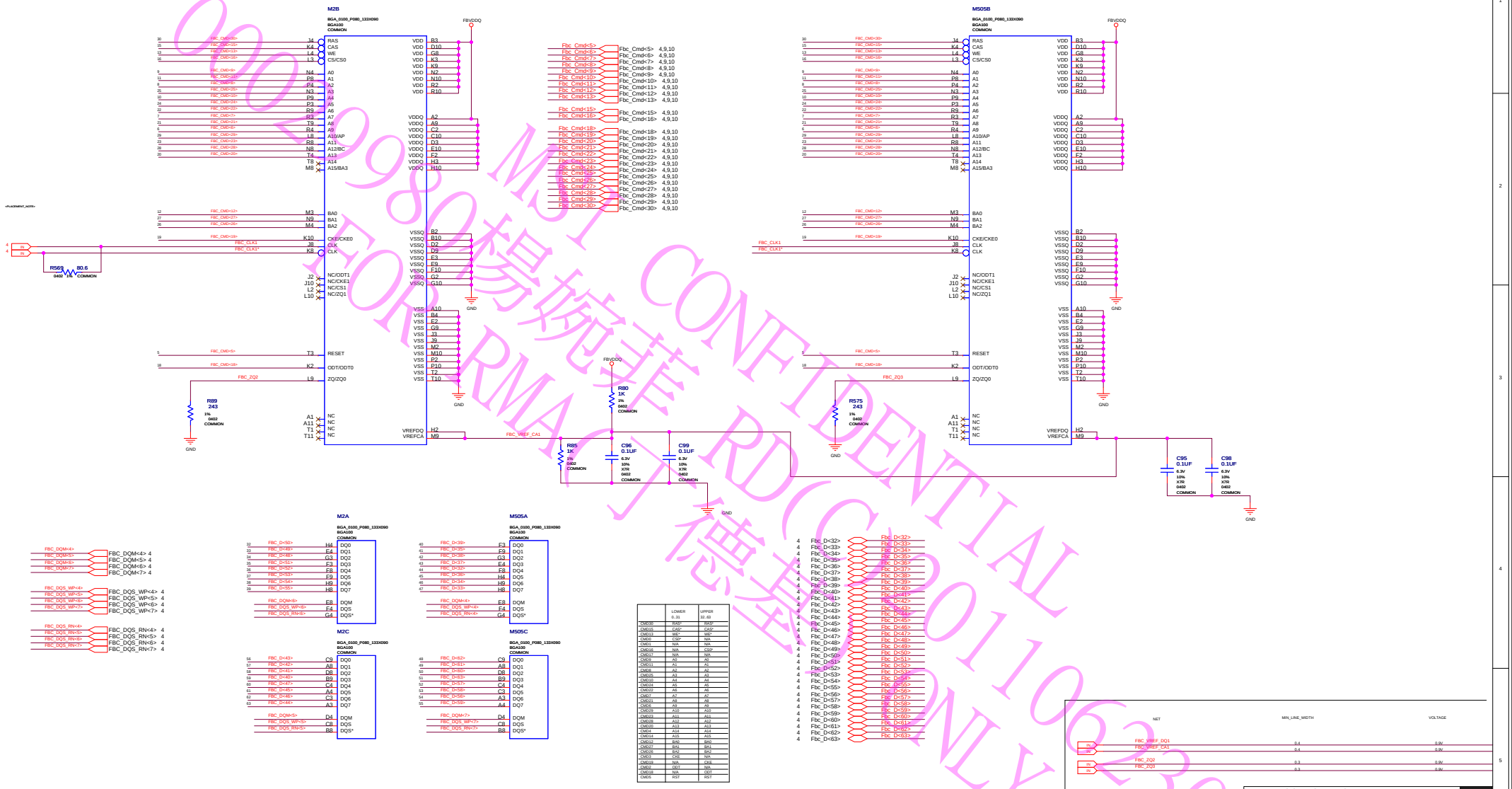

	LOWER 0.31	UPPER 12.63
*MC30	RAS*	RAS*
CMD11	CAS*	CAS*
CMD12	WE*	WE*
CMD0	CS0*	N/A
CMD1	N/A	N/A
CMD16	N/A	CS0*
CMD17	N/A	N/A
CMD9	A0	A0
CMD13	A1	A1
CMD8	A2	A2
CMD15	A3	A3
CMD14	A4	A4
CMD22	A5	A5
CMD21	A6	A6
CMD7	A7	A7
CMD23	A8	A8
CMD24	A9	A9
CMD19	A10	A10
CMD20	A11	A11
CMD28	A12	A12
CMD30	A13	A13
CMD4	A14	A14
CMD18	A15	A15
CMD10	BA0	BA0
CMD27	BA1	BA1
CMD26	BA2	BA2
CMD3	CKE	N/A
CMD29	N/A	CKE
CMD2	ODT	N/A
CMD25	N/A	ODT
CMD5	RST	RST

NET	MIN_LINE_WIDTH	VOLTAGE
FBC_VREF_DQ1	0.4	0.9V
FBC_VREF_CA1	0.4	0.9V
FBC_ZQ2	0.3	0.9V
FBC_ZQ3	0.3	0.9V

ASSEMBLY	P1062 BASE LEVEL GENERIC SCHEMATIC ONLY, COMMON & NO_STUFF ASSEMBLY NOTES AND BOM NOT FINAL
PAGE DETAIL	Memory Upper Partition C

ALL NVIDIA DESIGN SPECIFICATIONS, REFERENCE SPECIFICATIONS, REFERENCE BOARDS, FILES, DRAWINGS, DIAGNOSTICS, LISTS AND OTHER DOCUMENTS OR INFORMATION (TOGETHER AND SEPARATELY, 'MATERIALS') ARE BEING PROVIDED 'AS IS'. THE MATERIALS MAY CONTAIN KNOWN AND UNKNOWN VIOLATIONS OR DEVIATIONS OF INDUSTRY STANDARDS AND SPECIFICATIONS. NVIDIA MAKES NO WARRANTIES, EXPRESSED, IMPLIED, STATUTORY OR OTHERWISE WITH RESPECT TO THE MATERIALS OR OTHERWISE, AND EXPRESSLY DISCLAIMS ALL IMPLIED WARRANTIES INCLUDING, WITHOUT LIMITATION, THE WARRANTIES OF DESIGN, OF NONINFRINGEMENT, MERCHANTABILITY OR FITNESS FOR A PARTICULAR PURPOSE, OR ARISING FROM A COURSE OF DEALING, TRADE USAGE, TRADE PRACTICE, OR INDUSTRY STANDARDS.

NVIDIA CORPORATION
2701 SAN TOMAS EXPRESSWAY
SANTA CLARA, CA 95050, USA

NV_PN	600-11062-base-100		
PCB REV	P1062-B00	PAGE	
BOM REV	A	DATE	06-APR-2010

MSI CONFIDENTIAL
RDC(C)2010106230001
FOR RMA 厂德用 ONLY
00079980 稽核章

Memory FBVDD/Q Decoupling

DECOUPLING FOR M6

DECOUPLING FOR M502

DECOUPLING FOR M501

DECOUPLING FOR M3

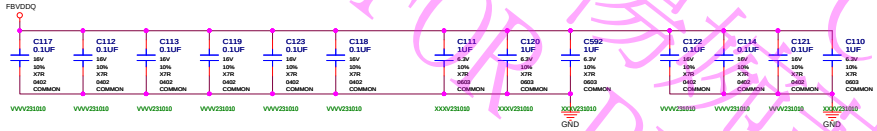

DECOUPLING FOR M504

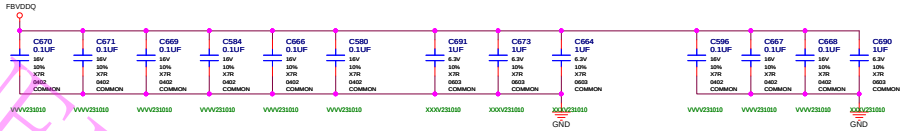

DECOUPLING FOR M4

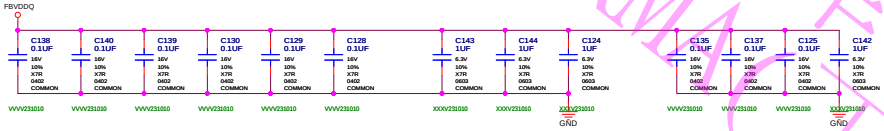

DECOUPLING FOR M503

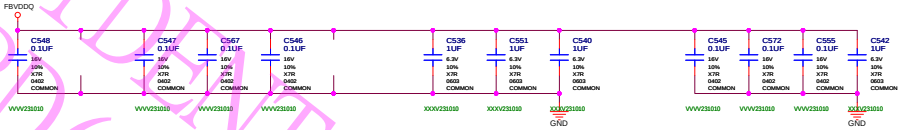

DECOUPLING FOR M2

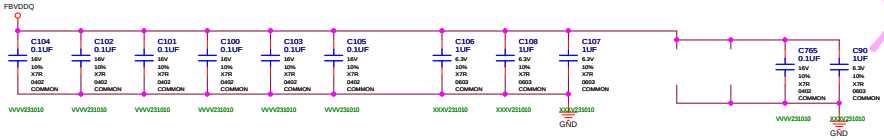

DECOUPLING FOR M505

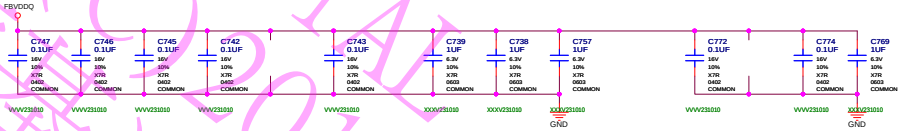

DECOUPLING FOR M1

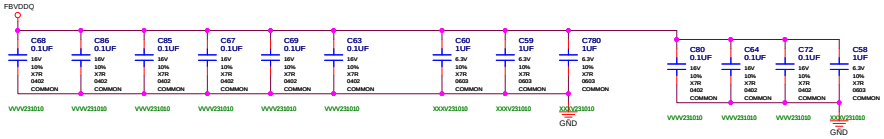

DECOUPLING FOR M506

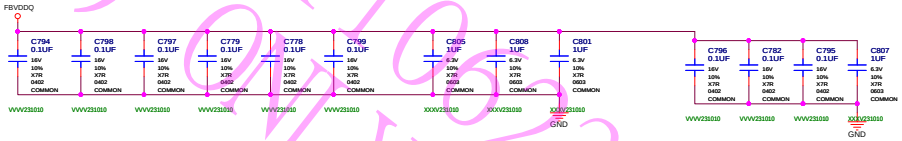

00029980 MSI CONFIDENTIAL RD(C)2010 FOR RMA 丁德强 01162309 ONLY

ASSEMBLY	
PAGE DETAIL	Memory FBVDD/Q Decoupling

ALL NVIDIA DESIGN SPECIFICATIONS, REFERENCE SPECIFICATIONS, REFERENCE BOARDS, FILES, DRAWINGS, DIAGNOSTICS, LISTS AND OTHER DOCUMENTS OR INFORMATION (TOGETHER AND SEPARATELY, 'MATERIALS') ARE BEING PROVIDED 'AS IS'. THE MATERIALS MAY CONTAIN KNOWN AND UNKNOWN VIOLATIONS OR DEVIATIONS OF INDUSTRY STANDARDS AND SPECIFICATIONS. NVIDIA MAKES NO WARRANTIES, EXPRESSED, IMPLIED, STATUTORY OR OTHERWISE WITH RESPECT TO THE MATERIALS OR OTHERWISE, AND EXPRESSLY DISCLAIMS ALL IMPLIED WARRANTIES INCLUDING, WITHOUT LIMITATION, THE WARRANTIES OF DESIGN, OF NONINFRINGEMENT, MERCHANTABILITY OR FITNESS FOR A PARTICULAR PURPOSE, OR ARISING FROM A COURSE OF DEALING, TRADE USAGE, TRADE PRACTICE, OR INDUSTRY STANDARDS.

NVIDIA CORPORATION
2701 SAN TOMAS EXPRESSWAY
SANTA CLARA, CA 95050, USA

NV_PN	600-11062-base-100		
PCB REV	P1062-B00	PAGE	
BOM REV	A	DATE	06-APR-2010

DACA for South DVI Interface

DACA RGB-FILTER

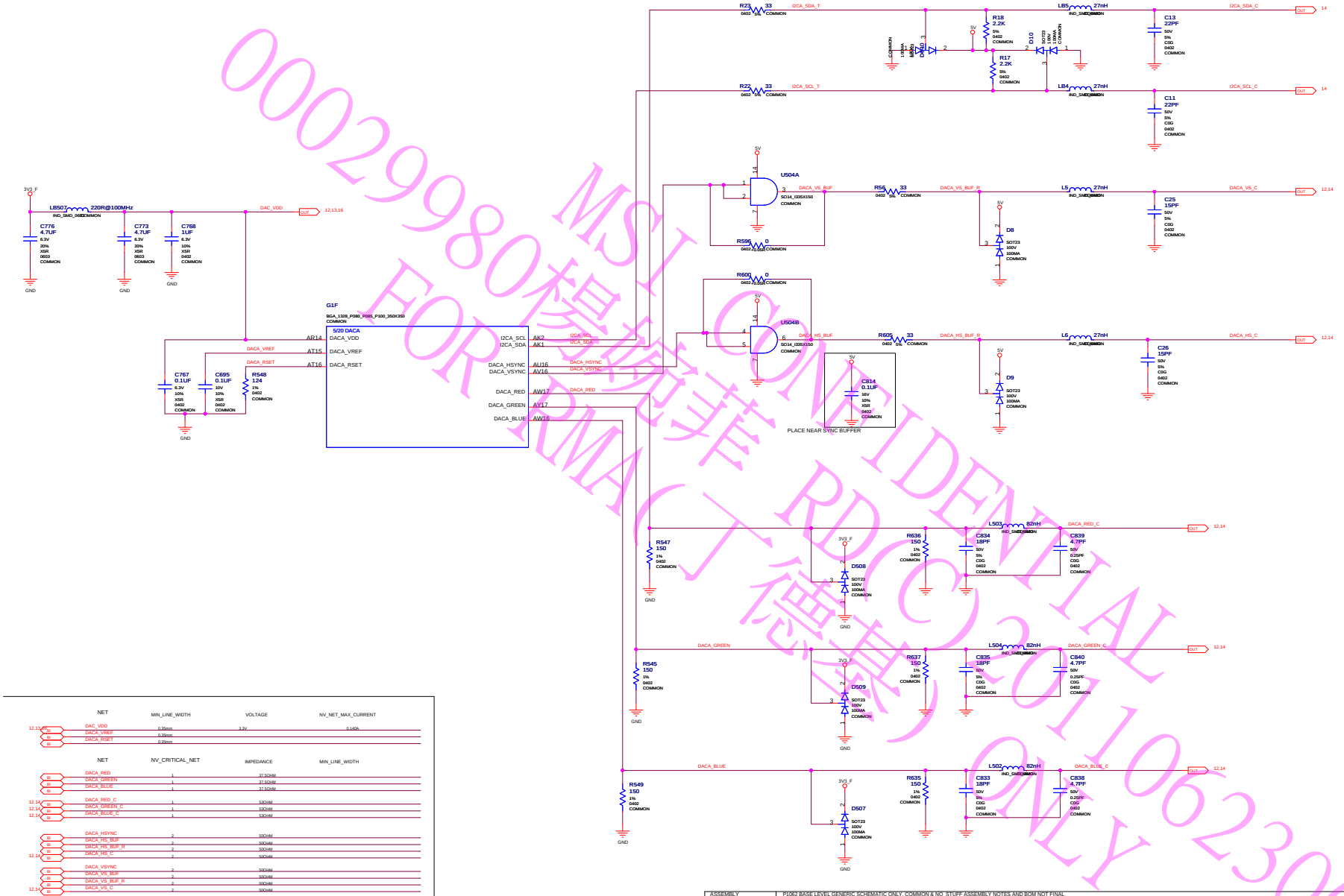

NET	MIN_LINE_WIDTH	VOLTAGE	NV_NET_MAX_CURRENT
DAC_VDD	0.35mm	3.3V	0.140A
DACA_VREF	0.35mm		
DACA_RSET	0.35mm		

NET	NV_CRITICAL_NET	IMPEDANCE	MIN_LINE_WIDTH
DACA_RED	1	37.5OHM	
DACA_GREEN	1	37.5OHM	
DACA_BLUE	1	37.5OHM	
DACA_RED_C	1	53OHM	
DACA_GREEN_C	1	53OHM	
DACA_BLUE_C	1	53OHM	
DACA_HSYNC	2	50OHM	
DACA_HS_BUF	2	50OHM	
DACA_HS_BUF_R	2	50OHM	
DACA_HS_C	2	50OHM	
DACA_VSYNC	2	50OHM	
DACA_VS_BUF	2	50OHM	
DACA_VS_BUF_R	2	50OHM	
DACA_VS_C	2	50OHM	

ASSEMBLY	P1062 BASE LEVEL GENERIC SCHEMATIC ONLY, COMMON & NO_STUFF ASSEMBLY NOTES AND BOM NOT FINAL
PAGE DETAIL	DACA Interface for DVI

ALL NVIDIA DESIGN SPECIFICATIONS, REFERENCE SPECIFICATIONS, REFERENCE BOARDS, FILES, DRAWINGS, DIAGNOSTICS, LISTS AND OTHER DOCUMENTS OR INFORMATION (TOGETHER AND SEPARATELY, 'MATERIALS') ARE BEING PROVIDED 'AS IS'. THE MATERIALS MAY CONTAIN KNOWN AND UNKNOWN VIOLATIONS OR DEVIATIONS OF INDUSTRY STANDARDS AND SPECIFICATIONS. NVIDIA MAKES NO WARRANTIES, EXPRESSED, IMPLIED, STATUTORY OR OTHERWISE WITH RESPECT TO THE MATERIALS OR OTHERWISE, AND EXPRESSLY DISCLAIMS ALL IMPLIED WARRANTIES INCLUDING, WITHOUT LIMITATION, THE WARRANTIES OF DESIGN, OF NONINFRINGEMENT, MERCHANTABILITY OR FITNESS FOR A PARTICULAR PURPOSE, OR ARISING FROM A COURSE OF DEALING, TRADE USAGE, TRADE PRACTICE, OR INDUSTRY STANDARDS.

NVIDIA CORPORATION
2701 SAN TOMAS EXPRESSWAY
SANTA CLARA, CA 95050, USA

NV_PN	600-11062-base-100		
PCB REV	P1062-B00	PAGE	
BOM REV	A	DATE	06-APR-2010

00029980 MSI CONFIDENTIAL FOR RMA (丁德清) RD (C) 2011062300 ONLY

DACB VGA

DACB RGB-FILTER

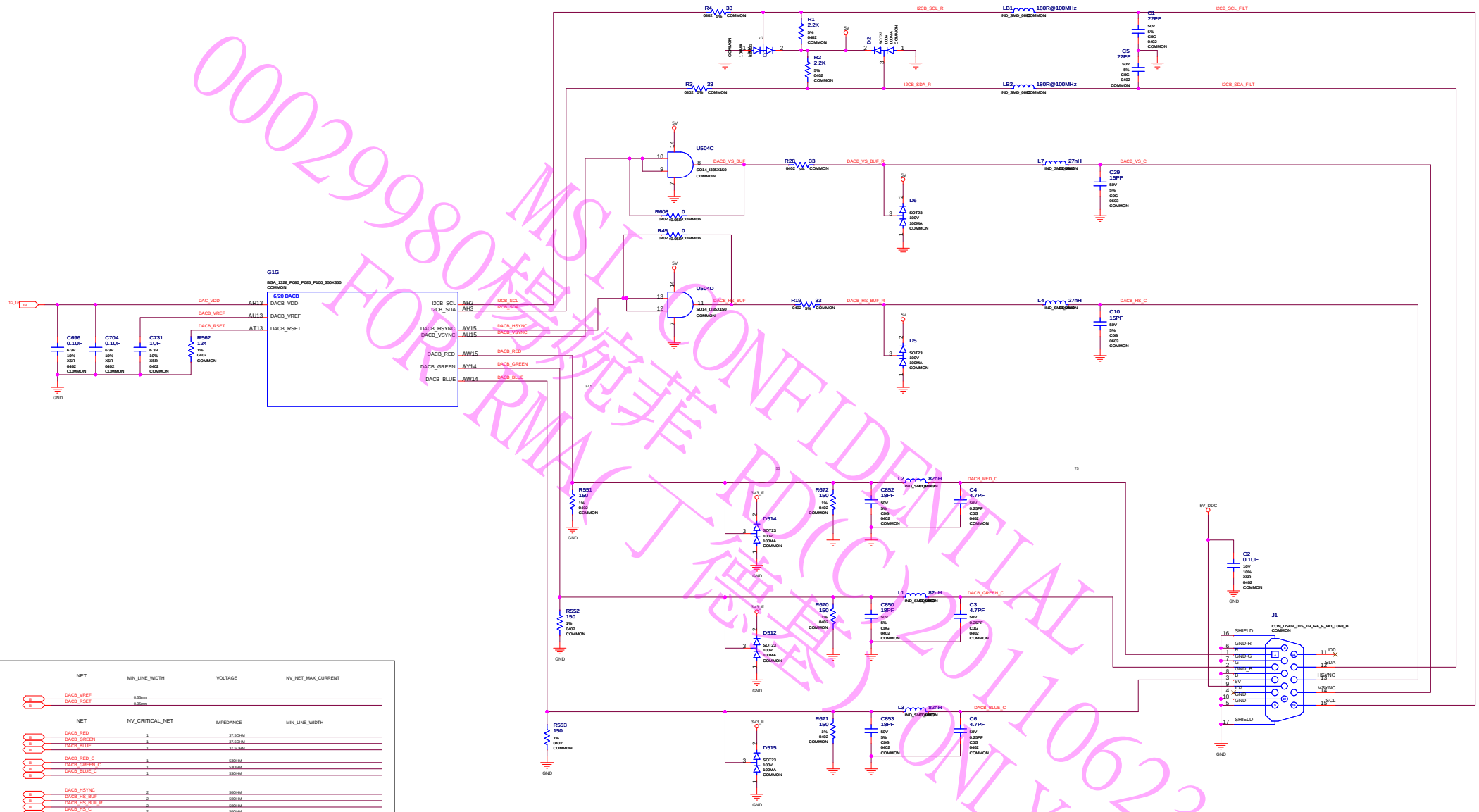

NET	MIN_LINE_WIDTH	VOLTAGE	NV_NET_MAX_CURRENT
DACB_VREF	0.35mm		
DACB_RSET	0.35mm		

NET	NV_CRITICAL_NET	IMPEDANCE	MIN_LINE_WIDTH
DACB_RED	1	37.5OHM	
DACB_GREEN	1	37.5OHM	
DACB_BLUE	1	37.5OHM	
DACB_RED_C	1	53OHM	
DACB_GREEN_C	1	53OHM	
DACB_BLUE_C	1	53OHM	
DACB_HSYNC	2	50OHM	
DACB_HS_BUF	2	50OHM	
DACB_HS_BUF_R	2	50OHM	
DACB_HS_C	2	50OHM	
DACB_VSYNC	2	50OHM	
DACB_VS_BUF	2	50OHM	
DACB_VS_BUF_R	2	50OHM	
DACB_VS_C	2	50OHM	

ASSEMBLY	P1062 BASE LEVEL GENERIC SCHEMATIC ONLY, COMMON & NO_STUFF ASSEMBLY NOTES AND BOM NOT FINAL
PAGE DETAIL	DACB Interface for VGA

ALL NVIDIA DESIGN SPECIFICATIONS, REFERENCE SPECIFICATIONS, REFERENCE BOARDS, FILES, DRAWINGS, DIAGNOSTICS, LISTS AND OTHER DOCUMENTS OR INFORMATION (TOGETHER AND SEPARATELY, 'MATERIALS') ARE BEING PROVIDED 'AS IS'. THE MATERIALS MAY CONTAIN KNOWN AND UNKNOWN VIOLATIONS OR DEVIATIONS OF INDUSTRY STANDARDS AND SPECIFICATIONS. NVIDIA MAKES NO WARRANTIES, EXPRESSED, IMPLIED, STATUTORY OR OTHERWISE WITH RESPECT TO THE MATERIALS OR OTHERWISE, AND EXPRESSLY DISCLAIMS ALL IMPLIED WARRANTIES INCLUDING, WITHOUT LIMITATION, THE WARRANTIES OF DESIGN, OF NONINFRINGEMENT, MERCHANTABILITY OR FITNESS FOR A PARTICULAR PURPOSE, OR ARISING FROM A COURSE OF DEALING, TRADE USAGE, TRADE PRACTICE, OR INDUSTRY STANDARDS.

NVIDIA CORPORATION
2701 SAN TOMAS EXPRESSWAY
SANTA CLARA, CA 95050, USA

NV_PN	600-11062-base-100		
PCB REV	P1062-B00	PAGE	
BOM REV	A	DATE	06-APR-2010

MSI CONFIDENTIAL
FOR RMA (丁德春) ONLY
PDCC2011062301
00029980

IFP A/B Interface -- DVI Connector, South

NET	MIN_LINE_WIDTH	VOLTAGE	NV_NET_MAX_CURRENT
IFPAB_PLLVDD	12MIL	1.05V	0.130A
IFPAB_IOVDD	12MIL	3.3V	0.220A
IFPAB_RSET	12MIL		

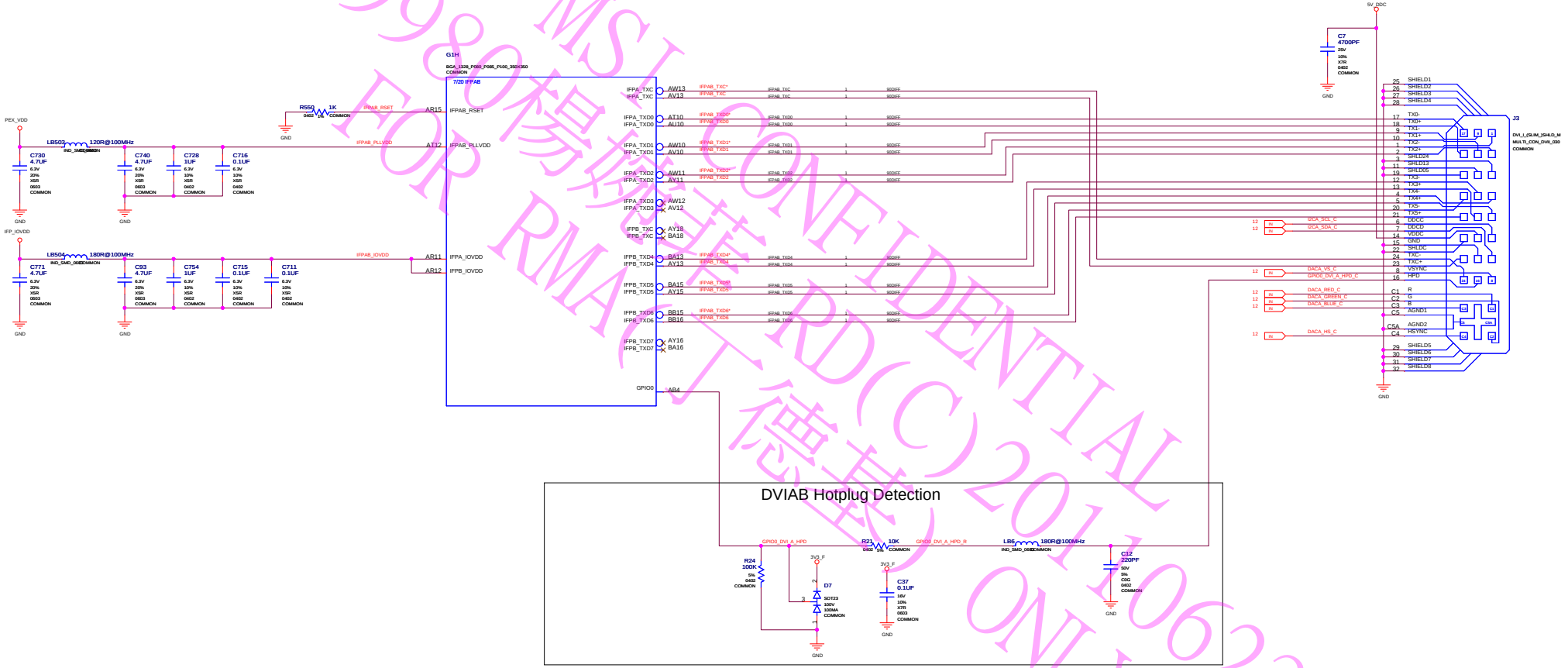

ASSEMBLY	P1062 BASE LEVEL GENERIC SCHEMATIC ONLY, COMMON & NO_STUFF ASSEMBLY NOTES AND BOM NOT FINAL
PAGE DETAIL	IFP A/B Interface -- DVI Connector, South

ALL NVIDIA DESIGN SPECIFICATIONS, REFERENCE SPECIFICATIONS, REFERENCE BOARDS, FILES, DRAWINGS, DIAGNOSTICS, LISTS AND OTHER DOCUMENTS OR INFORMATION (TOGETHER AND SEPARATELY, 'MATERIALS') ARE BEING PROVIDED 'AS IS'. THE MATERIALS MAY CONTAIN KNOWN AND UNKNOWN VIOLATIONS OR DEVIATIONS OF INDUSTRY STANDARDS AND SPECIFICATIONS. NVIDIA MAKES NO WARRANTIES, EXPRESSED, IMPLIED, STATUTORY OR OTHERWISE WITH RESPECT TO THE MATERIALS OR OTHERWISE, AND EXPRESSLY DISCLAIMS ALL IMPLIED WARRANTIES INCLUDING, WITHOUT LIMITATION, THE WARRANTIES OF DESIGN, OF NONINFRINGEMENT, MERCHANTABILITY OR FITNESS FOR A PARTICULAR PURPOSE, OR ARISING FROM A COURSE OF DEALING, TRADE USAGE, TRADE PRACTICE, OR INDUSTRY STANDARDS.

NVIDIA CORPORATION
2701 SAN TOMAS EXPRESSWAY
SANTA CLARA, CA 95050, USA

NV_PN	600-11062-base-100		
PCB REV	P1062-B00	PAGE	
BOM REV	A	DATE	06-APR-2010

MSI CONFIDENTIAL
FOR RMA (仅供维修) RD(C)2011062300 ONLY
0002998 0

IFP E/F Interface -- Unused

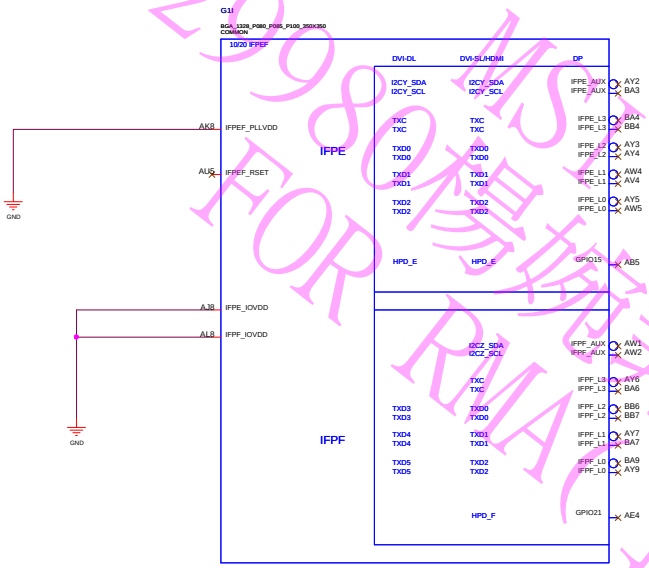

0002998 MS CONFIDENTIAL
FOR RMA(丁德基) RD(C)20110623001 ONLY

ASSEMBLY	P1062 BASE LEVEL GENERIC SCHEMATIC ONLY, COMMON & NO_STUFF ASSEMBLY NOTES AND BOM NOT FINAL
PAGE DETAIL	IFP E/F Interface -- UNUSED

ALL NVIDIA DESIGN SPECIFICATIONS, REFERENCE SPECIFICATIONS, REFERENCE BOARDS, FILES, DRAWINGS, DIAGNOSTICS, LISTS AND OTHER DOCUMENTS OR INFORMATION (TOGETHER AND SEPARATELY, 'MATERIALS') ARE BEING PROVIDED 'AS IS'. THE MATERIALS MAY CONTAIN KNOWN AND UNKNOWN VIOLATIONS OR DEVIATIONS OF INDUSTRY STANDARDS AND SPECIFICATIONS. NVIDIA MAKES NO WARRANTIES, EXPRESSED, IMPLIED, STATUTORY OR OTHERWISE WITH RESPECT TO THE MATERIALS OR OTHERWISE, AND EXPRESSLY DISCLAIMS ALL IMPLIED WARRANTIES INCLUDING, WITHOUT LIMITATION, THE WARRANTIES OF DESIGN, OF NONINFRINGEMENT, MERCHANTABILITY OR FITNESS FOR A PARTICULAR PURPOSE, OR ARISING FROM A COURSE OF DEALING, TRADE USAGE, TRADE PRACTICE, OR INDUSTRY STANDARDS.

NVIDIA CORPORATION
2701 SAN TOMAS EXPRESSWAY
SANTA CLARA, CA 95050, USA

NV_PN	600-11062-base-100		
PCB REV	P1062-B00	PAGE	
BOM REV	A	DATE	06-APR-2010

IFP C Interface -- HDMI, North

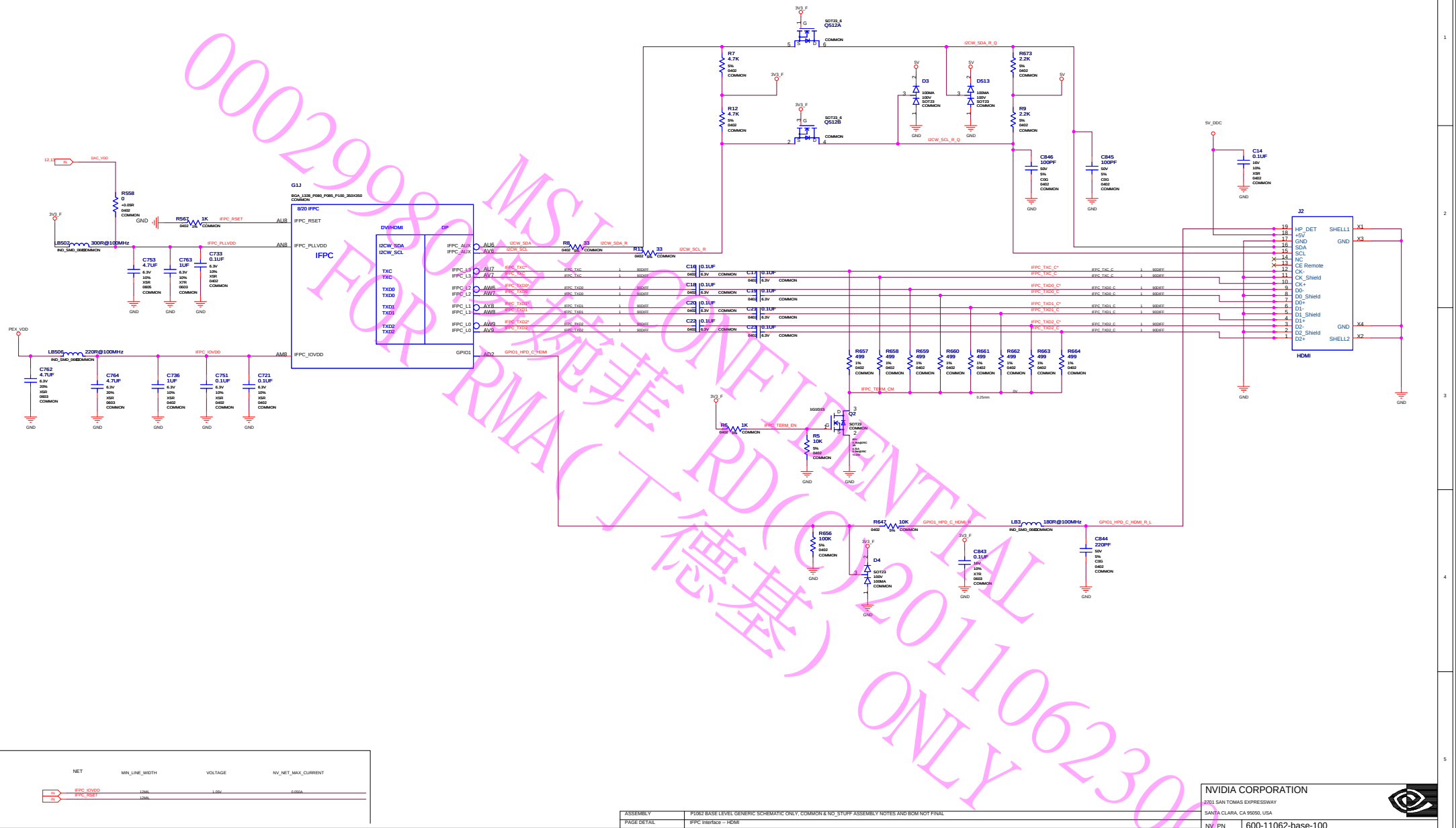

NET	MIN_LINE_WIDTH	VOLTAGE	NV_NET_MAX_CURRENT
IN IFPC_IOVDD	12MIL	1.05V	0.050A
IN IFPC_RSET	12MIL		

ASSEMBLY	P1062 BASE LEVEL GENERIC SCHEMATIC ONLY, COMMON & NO_STUFF ASSEMBLY NOTES AND BOM NOT FINAL
PAGE DETAIL	IFPC Interface -- HDMI

ALL NVIDIA DESIGN SPECIFICATIONS, REFERENCE SPECIFICATIONS, REFERENCE BOARDS, FILES, DRAWINGS, DIAGNOSTICS, LISTS AND OTHER DOCUMENTS OR INFORMATION (TOGETHER AND SEPARATELY, 'MATERIALS') ARE BEING PROVIDED 'AS IS'. THE MATERIALS MAY CONTAIN KNOWN AND UNKNOWN VIOLATIONS OR DEVIATIONS OF INDUSTRY STANDARDS AND SPECIFICATIONS. NVIDIA MAKES NO WARRANTIES, EXPRESSED, IMPLIED, STATUTORY OR OTHERWISE WITH RESPECT TO THE MATERIALS OR OTHERWISE, AND EXPRESSLY DISCLAIMS ALL IMPLIED WARRANTIES INCLUDING, WITHOUT LIMITATION, THE WARRANTIES OF DESIGN, OF NONINFRINGEMENT, MERCHANTABILITY OR FITNESS FOR A PARTICULAR PURPOSE, OR ARISING FROM A COURSE OF DEALING, TRADE USAGE, TRADE PRACTICE, OR INDUSTRY STANDARDS.

NVIDIA CORPORATION
2701 SAN TOMAS EXPRESSWAY
SANTA CLARA, CA 95050, USA

NV_PN	600-11062-base-100		
PCB REV	P1062-B00	PAGE	
BOM REV	A	DATE	06-APR-2010

MSI CONFIDENTIAL
000299806 FOR RD(G)20110623001
RMA(丁德基) ONLY

IFP D INTERFACE (UNUSED)

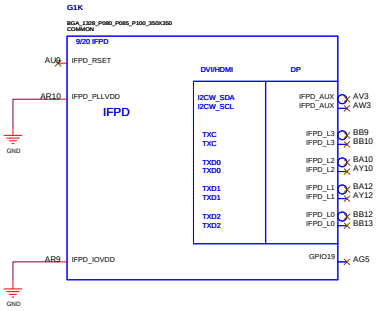

MSI CONFIDENTIAL
00029980楊婉菲 RD(C)20110623001
FOR RMA(丁德基) ONLY

ASSEMBLY	P1062 BASE LEVEL GENERIC SCHEMATIC ONLY, COMMON & NO_STUFF ASSEMBLY NOTES AND BOM NOT FINAL
PAGE DETAIL	IFPD (UNUSED)

ALL NVIDIA DESIGN SPECIFICATIONS, REFERENCE SPECIFICATIONS, REFERENCE BOARDS, FILES, DRAWINGS, DIAGNOSTICS, LISTS AND OTHER DOCUMENTS OR INFORMATION (TOGETHER AND SEPARATELY, 'MATERIALS') ARE BEING PROVIDED 'AS IS'. THE MATERIALS MAY CONTAIN KNOWN AND UNKNOWN VIOLATIONS OR DEVIATIONS OF INDUSTRY STANDARDS AND SPECIFICATIONS. NVIDIA MAKES NO WARRANTIES, EXPRESSED, IMPLIED, STATUTORY OR OTHERWISE WITH RESPECT TO THE MATERIALS OR OTHERWISE, AND EXPRESSLY DISCLAIMS ALL IMPLIED WARRANTIES INCLUDING, WITHOUT LIMITATION, THE WARRANTIES OF DESIGN, OF NONINFRINGEMENT, MERCHANTABILITY OR FITNESS FOR A PARTICULAR PURPOSE, OR ARISING FROM A COURSE OF DEALING, TRADE USAGE, TRADE PRACTICE, OR INDUSTRY STANDARDS.

NVIDIA CORPORATION
2701 SAN TOMAS EXPRESSWAY
SANTA CLARA, CA 95050, USA

NV_PN	600-11062-base-100		
PCB REV	P1062-B00	PAGE	
BOM REV	A	DATE	06-APR-2010

MIO A Interface, SLI

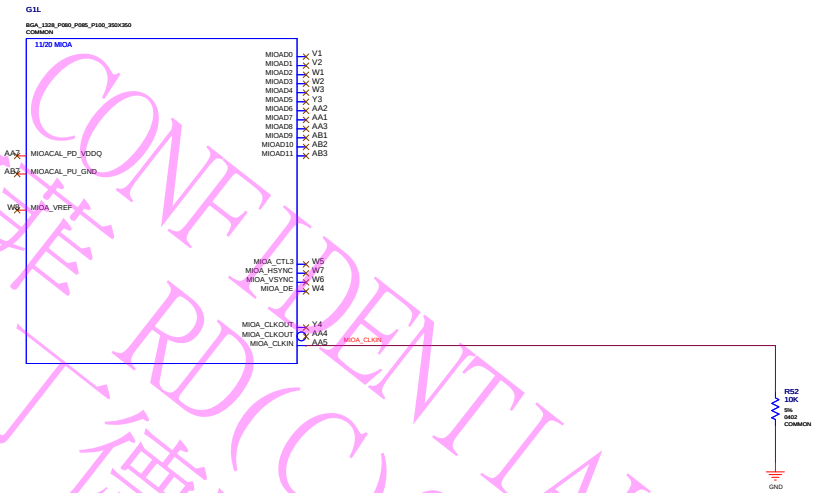

NET	NV_CRITICAL_NET	IMPEDANCE	DIFFPAIR

NET	MIN_LINE_WIDTH	VOLTAGE	NV_NET_MAX_CURRENT

ASSEMBLY	P1062 BASE LEVEL GENERIC SCHEMATIC ONLY, COMMON & NO_STUFF ASSEMBLY NOTES AND BOM NOT FINAL
PAGE DETAIL	MIO A Interface, SLI

ALL NVIDIA DESIGN SPECIFICATIONS, REFERENCE SPECIFICATIONS, REFERENCE BOARDS, FILES, DRAWINGS, DIAGNOSTICS, LISTS AND OTHER DOCUMENTS OR INFORMATION (TOGETHER AND SEPARATELY, 'MATERIALS') ARE BEING PROVIDED 'AS IS'. THE MATERIALS MAY CONTAIN KNOWN AND UNKNOWN VIOLATIONS OR DEVIATIONS OF INDUSTRY STANDARDS AND SPECIFICATIONS. NVIDIA MAKES NO WARRANTIES, EXPRESSED, IMPLIED, STATUTORY OR OTHERWISE WITH RESPECT TO THE MATERIALS OR OTHERWISE, AND EXPRESSLY DISCLAIMS ALL IMPLIED WARRANTIES INCLUDING, WITHOUT LIMITATION, THE WARRANTIES OF DESIGN, OF NONINFRINGEMENT, MERCHANTABILITY OR FITNESS FOR A PARTICULAR PURPOSE, OR ARISING FROM A COURSE OF DEALING, TRADE USAGE, TRADE PRACTICE, OR INDUSTRY STANDARDS.

NVIDIA CORPORATION
2701 SAN TOMAS EXPRESSWAY
SANTA CLARA, CA 95050, USA

NV_PN	600-11062-base-100		
PCB REV	P1062-B00	PAGE	
BOM REV	A	DATE	06-APR-2010

MSI CONFIDENTIAL
00029980楊皓宇 RD(C)20110623001
FOR RMA(丁德基) ONLY

MISC: GPIO, I2C, ROM, HDCP, and XTAL

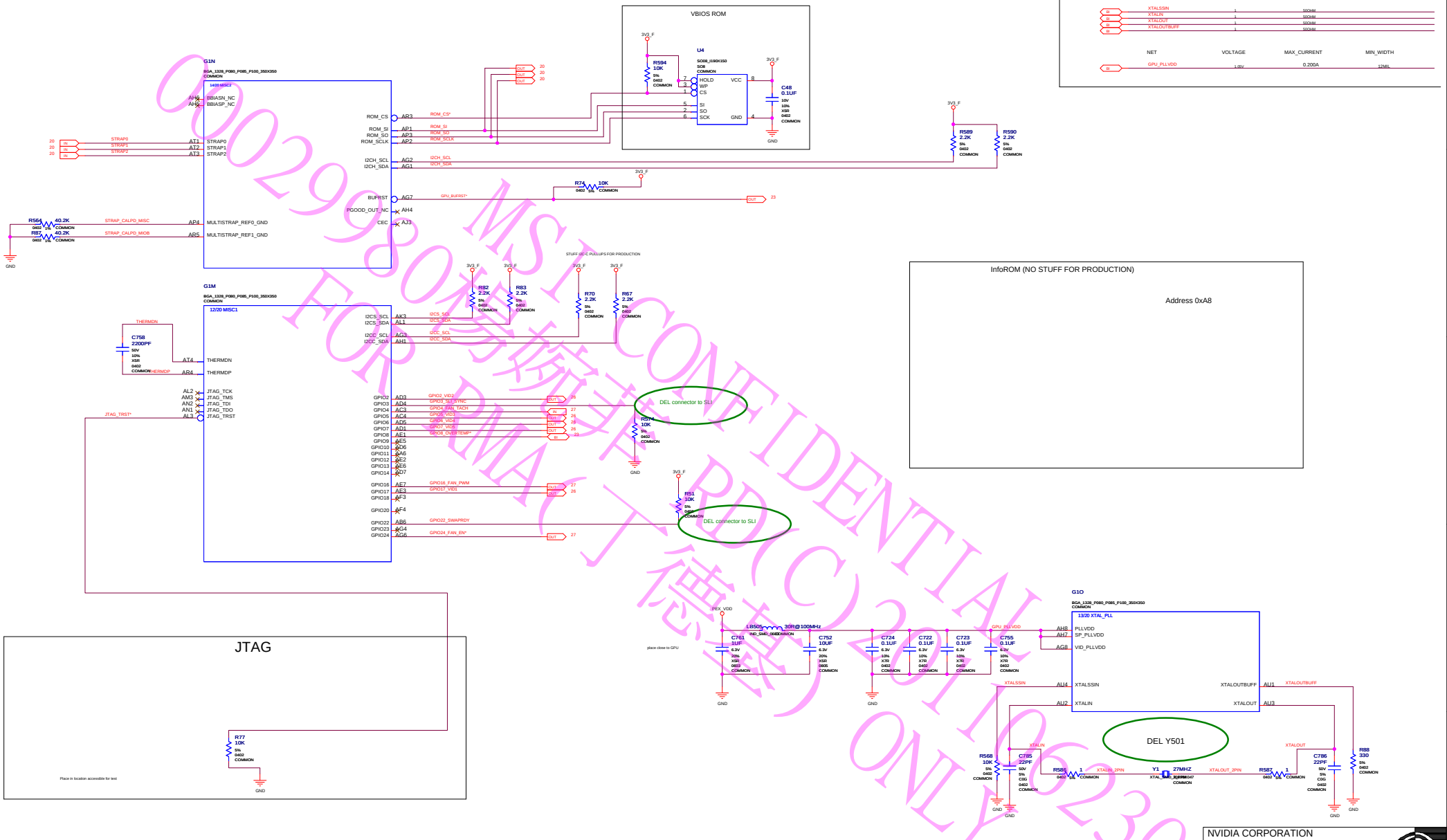

NET	NV_CRITICAL	NV_IMPEDANCE	DIFFPAIR
XTALSSIN	1	50OHM	
XTALIN	1	50OHM	
XTALOUT	1	50OHM	
XTALOUTBUFF	1	50OHM	

NET	VOLTAGE	MAX_CURRENT	MIN_WIDTH
GPU_PLLVDD	1.05V	0.200A	12MIL

MSI CONFIDENTIAL
FOR PMA 广德 (PDC) 2910 ONLY
0029980 2010-04-23 162300

ASSEMBLY	P1062 BASE LEVEL GENERIC SCHEMATIC ONLY, COMMON & NO_STUFF ASSEMBLY NOTES AND BOM NOT FINAL
PAGE DETAIL	MISC: GPIO, I2C, ROM, and XTAL

ALL NVIDIA DESIGN SPECIFICATIONS, REFERENCE SPECIFICATIONS, REFERENCE BOARDS, FILES, DRAWINGS, DIAGNOSTICS, LISTS AND OTHER DOCUMENTS OR INFORMATION (TOGETHER AND SEPARATELY, 'MATERIALS') ARE BEING PROVIDED 'AS IS'. THE MATERIALS MAY CONTAIN KNOWN AND UNKNOWN VIOLATIONS OR DEVIATIONS OF INDUSTRY STANDARDS AND SPECIFICATIONS. NVIDIA MAKES NO WARRANTIES, EXPRESSED, IMPLIED, STATUTORY OR OTHERWISE WITH RESPECT TO THE MATERIALS OR OTHERWISE, AND EXPRESSLY DISCLAIMS ALL IMPLIED WARRANTIES INCLUDING, WITHOUT LIMITATION, THE WARRANTIES OF DESIGN, OF NONINFRINGEMENT, MERCHANTABILITY OR FITNESS FOR A PARTICULAR PURPOSE, OR ARISING FROM A COURSE OF DEALING, TRADE USAGE, TRADE PRACTICE, OR INDUSTRY STANDARDS.

NVIDIA CORPORATION
2701 SAN TOMAS EXPRESSWAY
SANTA CLARA, CA 95050, USA

NV_PN	600-11062-base-100		
PCB REV	P1062-B00	PAGE	
BOM REV	A	DATE	06-APR-2010

Strap Configuration

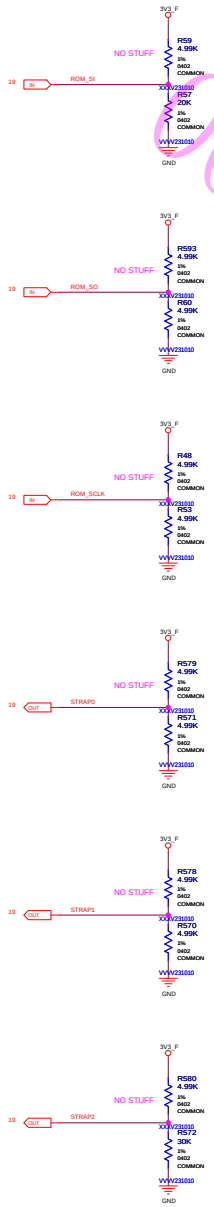

GF106-300: 0x0DC0

				PU	PD
ROM_SO	VGA_DEVICE SMB_ALT_ADDR FB_0_BAR_SIZE XCLK_417	LSb MSb	1: VGA DEVICE 0: 0x9E(POR) 0: 256MB(POR) 0: 277MHz		10K
ROM_SI	RAM_CFG[1:0]		64Mx16 192-bit Samsung 64Mx16 192-bit Hynix 64Mx16 192-bit Winbond 64Mx16 192-bit Nanya	20k PD 15k PD 10k PD 5k PD	20k
ROM_SCLK	PEX_PLL_EN_TERM100 SLOT_CLK_CONFIG SUB_VENDOR PCI_DEVID_EXT	LSb MSb	0: DISABLED (POR) 1: GPU and MCH COMMON REFCLK 1: VBIOS ROM IS PRESENT 0: PCIDEVID[8]		35K
STRAP0	USER_BIT[3:0]		0x0: DEFAULT		5K
STRAP1	2GIO_PADCFG_IUT_ADR[3:0]		0x0: Desktop (high swing)		5K
STRAP2	PCI_DEVID[3:0]		0x0: PCI DEVID=0X0DC0		5K

Multi-level Strap Resistor Values

Strap	PU/PD	Rval (kOhm)
0	PD	5
1	PD	10
2	PD	15
3	PD	20
4	PD	25
5	PD	30
6	PD	35
7	PD	45
8	PU	5
9	PU	10
10	PU	15
11	PU	20
12	PU	25
13	PU	30
14	PU	35
15	PU	45

0002998 MSI CONFIDENTIAL
80元零配件 RD(C)20110623001
FOR RMA(丁德基) ONLY

ASSEMBLY	P1062 BASE LEVEL GENERIC SCHEMATIC ONLY, COMMON & NO_STUFF ASSEMBLY NOTES AND BOM NOT FINAL
PAGE DETAIL	Strap Configuration

ALL NVIDIA DESIGN SPECIFICATIONS, REFERENCE SPECIFICATIONS, REFERENCE BOARDS, FILES, DRAWINGS, DIAGNOSTICS, LISTS AND OTHER DOCUMENTS OR INFORMATION (TOGETHER AND SEPARATELY, 'MATERIALS') ARE BEING PROVIDED 'AS IS'. THE MATERIALS MAY CONTAIN KNOWN AND UNKNOWN VIOLATIONS OR DEVIATIONS OF INDUSTRY STANDARDS AND SPECIFICATIONS. NVIDIA MAKES NO WARRANTIES, EXPRESSED, IMPLIED, STATUTORY OR OTHERWISE WITH RESPECT TO THE MATERIALS OR OTHERWISE, AND EXPRESSLY DISCLAIMS ALL IMPLIED WARRANTIES INCLUDING, WITHOUT LIMITATION, THE WARRANTIES OF DESIGN, OF NONINFRINGEMENT, MERCHANTABILITY OR FITNESS FOR A PARTICULAR PURPOSE, OR ARISING FROM A COURSE OF DEALING, TRADE USAGE, TRADE PRACTICE, OR INDUSTRY STANDARDS.

NVIDIA CORPORATION
2701 SAN TOMAS EXPRESSWAY
SANTA CLARA, CA 95050, USA

NV_PN	600-11062-base-100		
PCB REV	P1062-B00	PAGE	
BOM REV	A	DATE	06-APR-2010

PWR and GND Signals

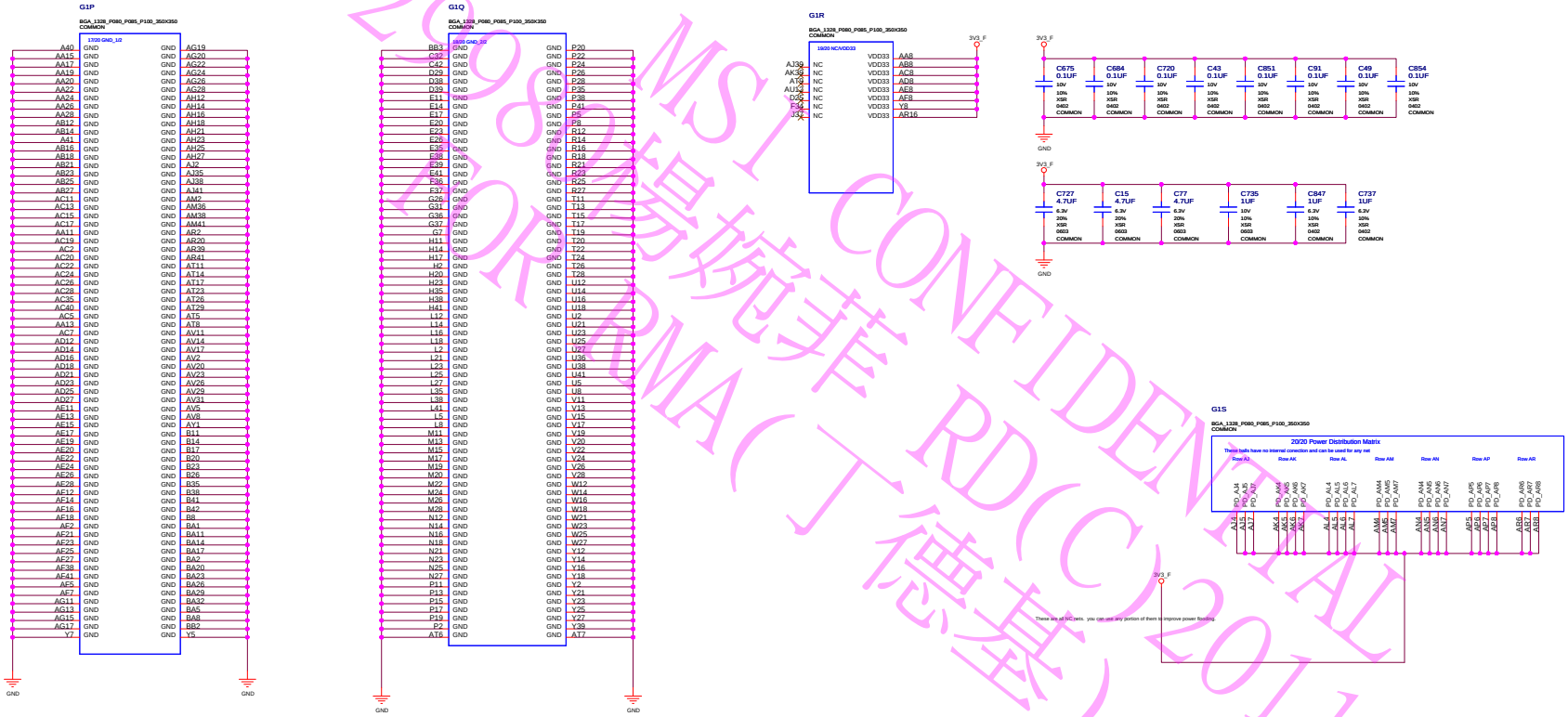

MSI CONFIDENTIAL RD(C)20110623001 ONLY FOR RMA(丁德基)

ASSEMBLY	P1062 BASE LEVEL GENERIC SCHEMATIC ONLY, COMMON & NO_STUFF ASSEMBLY NOTES AND BOM NOT FINAL
PAGE DETAIL	PWR and GND Signals

ALL NVIDIA DESIGN SPECIFICATIONS, REFERENCE SPECIFICATIONS, REFERENCE BOARDS, FILES, DRAWINGS, DIAGNOSTICS, LISTS AND OTHER DOCUMENTS OR INFORMATION (TOGETHER AND SEPARATELY, 'MATERIALS') ARE BEING PROVIDED 'AS IS'. THE MATERIALS MAY CONTAIN KNOWN AND UNKNOWN VIOLATIONS OR DEVIATIONS OF INDUSTRY STANDARDS AND SPECIFICATIONS. NVIDIA MAKES NO WARRANTIES, EXPRESSED, IMPLIED, STATUTORY OR OTHERWISE WITH RESPECT TO THE MATERIALS OR OTHERWISE, AND EXPRESSLY DISCLAIMS ALL IMPLIED WARRANTIES INCLUDING, WITHOUT LIMITATION, THE WARRANTIES OF DESIGN, OF NONINFRINGEMENT, MERCHANTABILITY OR FITNESS FOR A PARTICULAR PURPOSE, OR ARISING FROM A COURSE OF DEALING, TRADE USAGE, TRADE PRACTICE, OR INDUSTRY STANDARDS.

NVIDIA CORPORATION
2701 SAN TOMAS EXPRESSWAY
SANTA CLARA, CA 95050, USA

NV_PN	600-11062-base-100		
PCB REV	P1062-B00	PAGE	
BOM REV	A	DATE	06-APR-2010

NVVDD Decoupling

000299980 特密 MSI CONFIDENTIAL
FOR DMA (RDC) 20110623001
德基 ONLY

ASSEMBLY	P1062 BASE LEVEL GENERIC SCHEMATIC ONLY, COMMON & NO_STUFF ASSEMBLY NOTES AND BOM NOT FINAL
PAGE DETAIL	NVVDD Decoupling

ALL NVIDIA DESIGN SPECIFICATIONS, REFERENCE SPECIFICATIONS, REFERENCE BOARDS, FILES, DRAWINGS, DIAGNOSTICS, LISTS AND OTHER DOCUMENTS OR INFORMATION (TOGETHER AND SEPARATELY, 'MATERIALS') ARE BEING PROVIDED 'AS IS'. THE MATERIALS MAY CONTAIN KNOWN AND UNKNOWN VIOLATIONS OR DEVIATIONS OF INDUSTRY STANDARDS AND SPECIFICATIONS. NVIDIA MAKES NO WARRANTIES, EXPRESSED, IMPLIED, STATUTORY OR OTHERWISE WITH RESPECT TO THE MATERIALS OR OTHERWISE, AND EXPRESSLY DISCLAIMS ALL IMPLIED WARRANTIES INCLUDING, WITHOUT LIMITATION, THE WARRANTIES OF DESIGN, OF NONINFRINGEMENT, MERCHANTABILITY OR FITNESS FOR A PARTICULAR PURPOSE, OR ARISING FROM A COURSE OF DEALING, TRADE USAGE, TRADE PRACTICE, OR INDUSTRY STANDARDS.

NVIDIA CORPORATION
2701 SAN TOMAS EXPRESSWAY
SANTA CLARA, CA 95050, USA

NV_PN	600-11062-base-100		
PCB REV	P1062-B00	PAGE	
BOM REV	A	DATE	06-APR-2010

Power Sequencing, Thermal Protection, and IFP_IOVDD Power Supply

Thermal Protection (latch)

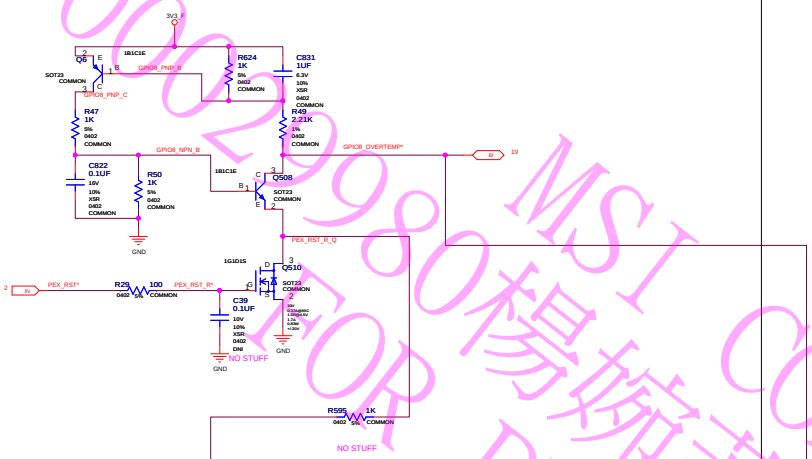

IFP_IOVDD Backdrive Prevention

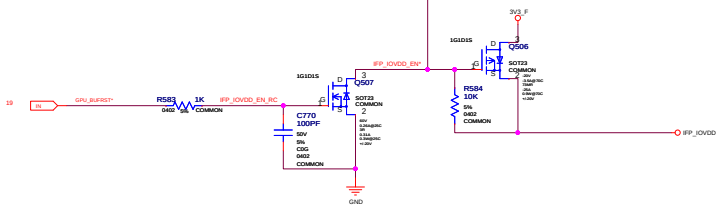

NVVDD Sequence

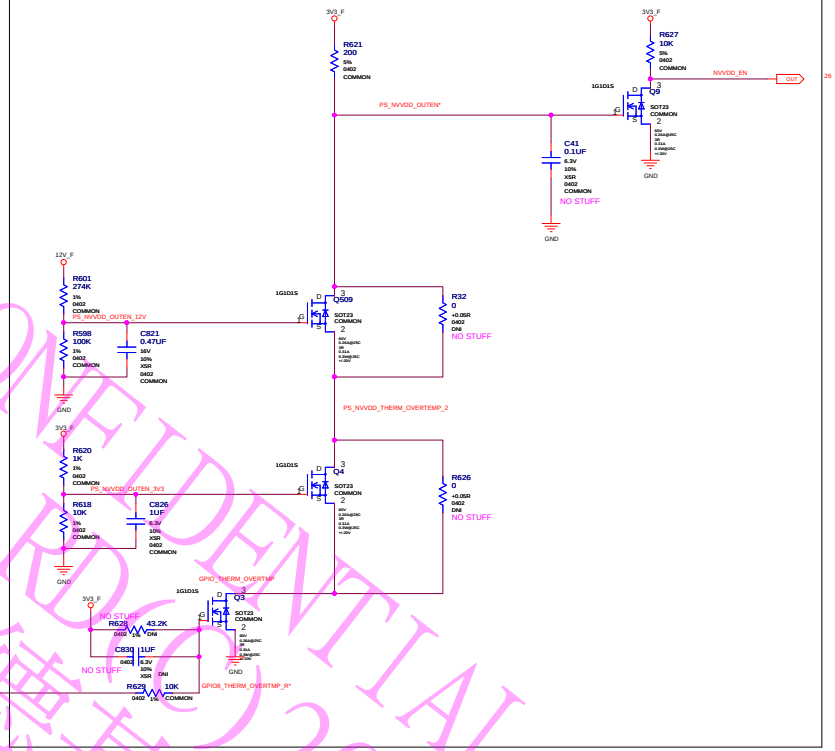

ASSEMBLY	P1062 BASE LEVEL GENERIC SCHEMATIC ONLY, COMMON & NO_STUFF ASSEMBLY NOTES AND BOM NOT FINAL
PAGE DETAIL	Backdrive Protection, Thermal Protection, and Power Sequencing

ALL NVIDIA DESIGN SPECIFICATIONS, REFERENCE SPECIFICATIONS, REFERENCE BOARDS, FILES, DRAWINGS, DIAGNOSTICS, LISTS AND OTHER DOCUMENTS OR INFORMATION (TOGETHER AND SEPARATELY, 'MATERIALS') ARE BEING PROVIDED 'AS IS'. THE MATERIALS MAY CONTAIN KNOWN AND UNKNOWN VIOLATIONS OR DEVIATIONS OF INDUSTRY STANDARDS AND SPECIFICATIONS. NVIDIA MAKES NO WARRANTIES, EXPRESSED, IMPLIED, STATUTORY OR OTHERWISE WITH RESPECT TO THE MATERIALS OR OTHERWISE, AND EXPRESSLY DISCLAIMS ALL IMPLIED WARRANTIES INCLUDING, WITHOUT LIMITATION, THE WARRANTIES OF DESIGN, OF NONINFRINGEMENT, MERCHANTABILITY OR FITNESS FOR A PARTICULAR PURPOSE, OR ARISING FROM A COURSE OF DEALING, TRADE USAGE, TRADE PRACTICE, OR INDUSTRY STANDARDS.

NVIDIA CORPORATION
2701 SAN TOMAS EXPRESSWAY
SANTA CLARA, CA 95050, USA

NV_PN	600-11062-base-100		
PCB REV	P1062-B00	PAGE	
BOM REV	A	DATE	06-APR-2010

MSI CONFIDENTIAL
00029980穆皓菲 RMA(厂修基) ONLY FOR RD
(C)2011062300

PS I: 3V3, 12V, and 12V_EXT Power Supply Filter, 5V, DDC VOLTAGE

NET	VOLTAGE	MAX_CURRENT	MIN_WIDTH
GND	0V	28A	16MIL

3V3 Power Supply Filter

3V3_F = 3.3V @ 2.4A

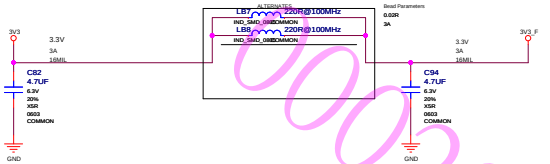

12V Power Supply Filter

12V_F = 12V @ 5.5A

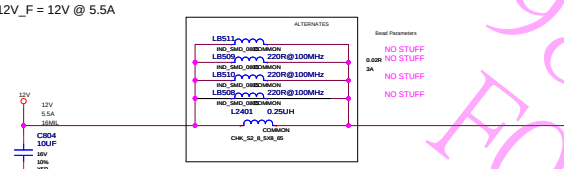

5V POWER SUPPLY, DDC POWER

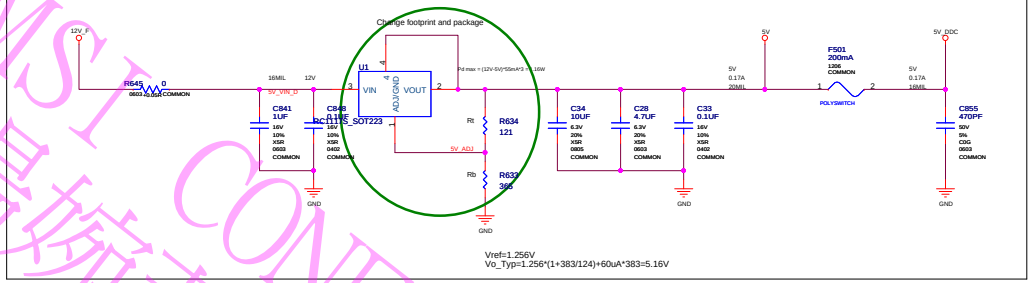

PEXVDD ENABLE

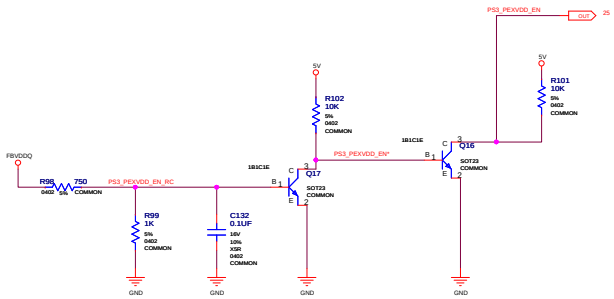

12V_EXT Power Connector

12V_EXT Power Supply Filter

12V_EXT_F = 12V @ 6A

OPTION for FBVDDQ SOURCE

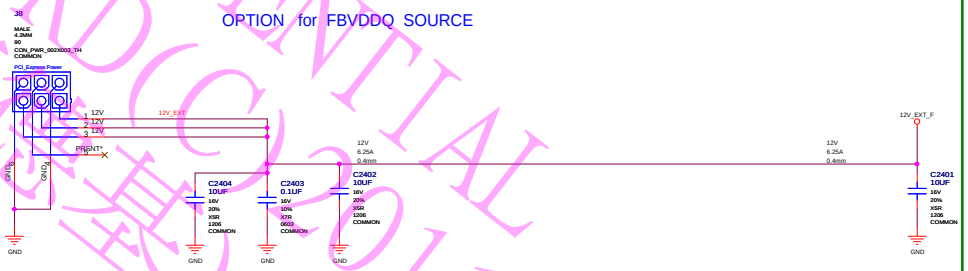

ASSEMBLY	P1062 BASE LEVEL GENERIC SCHEMATIC ONLY, COMMON & NO_STUFF ASSEMBLY NOTES AND BOM NOT FINAL
PAGE DETAIL	PEXVDD ENABLE, 3V3, 12V Power Supply Filter, 5V AND DDC VOLTAGE

ALL NVIDIA DESIGN SPECIFICATIONS, REFERENCE SPECIFICATIONS, REFERENCE BOARDS, FILES, DRAWINGS, DIAGNOSTICS, LISTS AND OTHER DOCUMENTS OR INFORMATION (TOGETHER AND SEPARATELY, 'MATERIALS') ARE BEING PROVIDED 'AS IS'. THE MATERIALS MAY CONTAIN KNOWN AND UNKNOWN VIOLATIONS OR DEVIATIONS OF INDUSTRY STANDARDS AND SPECIFICATIONS. NVIDIA MAKES NO WARRANTIES, EXPRESSED, IMPLIED, STATUTORY OR OTHERWISE WITH RESPECT TO THE MATERIALS OR OTHERWISE, AND EXPRESSLY DISCLAIMS ALL IMPLIED WARRANTIES INCLUDING, WITHOUT LIMITATION, THE WARRANTIES OF DESIGN, OF NONINFRINGEMENT, MERCHANTABILITY OR FITNESS FOR A PARTICULAR PURPOSE, OR ARISING FROM A COURSE OF DEALING, TRADE USAGE, TRADE PRACTICE, OR INDUSTRY STANDARDS.

NVIDIA CORPORATION
2701 SAN TOMAS EXPRESSWAY
SANTA CLARA, CA 95050, USA

NV_PN	600-11062-base-100		
PCB REV	P1062-B00	PAGE	
BOM REV	A	DATE	06-APR-2010

00029980移植手 RD(C)20110623001
MSI CONFIDENTIAL
FOR RMA(工程复) ONLY

PS II: FBVDDQ, PEX_VDD

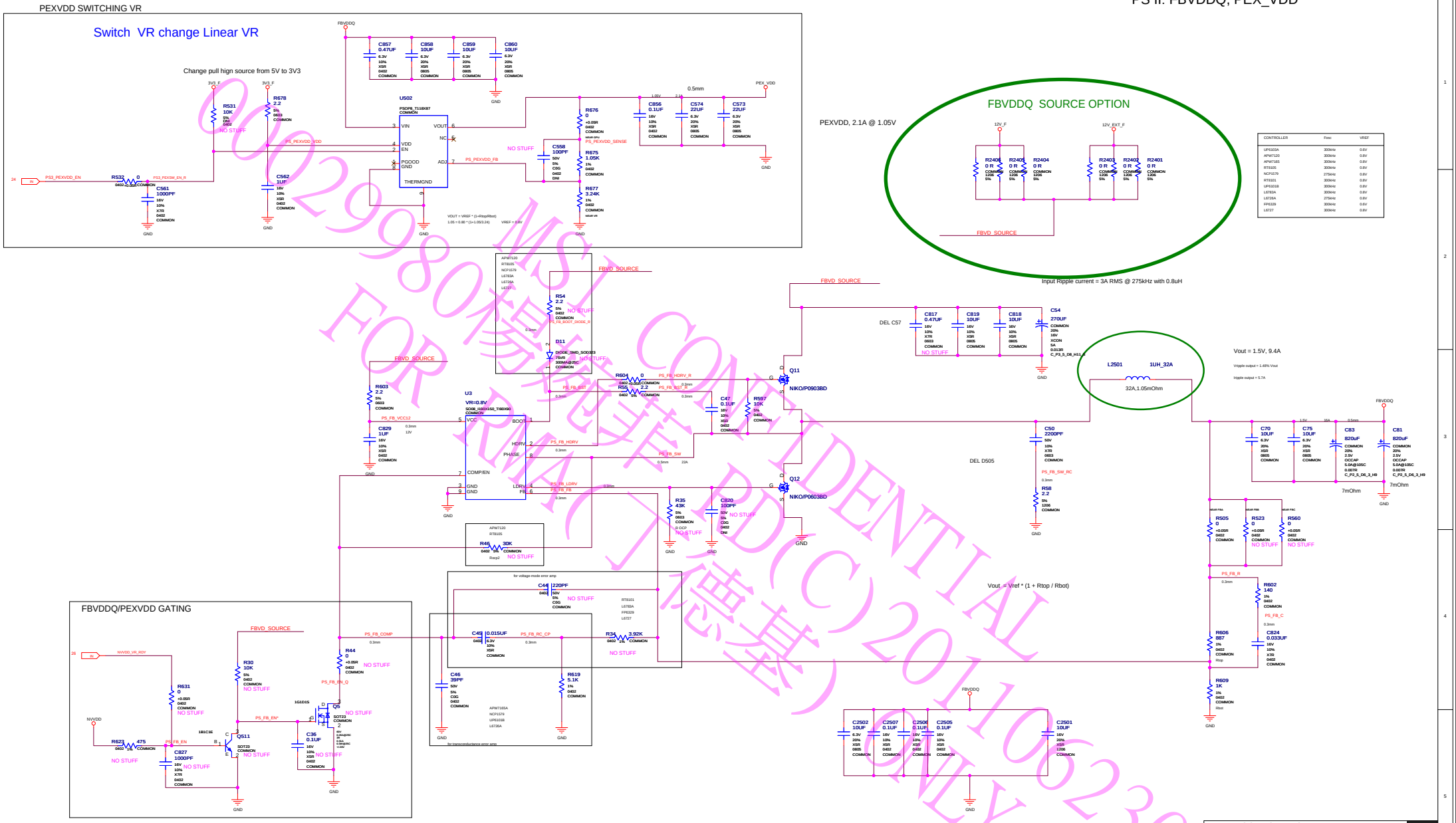

ASSEMBLY	
PAGE DETAIL	PEX_VDD switcher, FBVDDQ

ALL NVIDIA DESIGN SPECIFICATIONS, REFERENCE SPECIFICATIONS, REFERENCE BOARDS, FILES, DRAWINGS, DIAGNOSTICS, LISTS AND OTHER DOCUMENTS OR INFORMATION (TOGETHER AND SEPARATELY, 'MATERIALS') ARE BEING PROVIDED 'AS IS'. THE MATERIALS MAY CONTAIN KNOWN AND UNKNOWN VIOLATIONS OR DEVIATIONS OF INDUSTRY STANDARDS AND SPECIFICATIONS. NVIDIA MAKES NO WARRANTIES, EXPRESSED, IMPLIED, STATUTORY OR OTHERWISE WITH RESPECT TO THE MATERIALS OR OTHERWISE, AND EXPRESSLY DISCLAIMS ALL IMPLIED WARRANTIES INCLUDING, WITHOUT LIMITATION, THE WARRANTIES OF DESIGN, OF NONINFRINGEMENT, MERCHANTABILITY OR FITNESS FOR A PARTICULAR PURPOSE, OR ARISING FROM A COURSE OF DEALING, TRADE USAGE, TRADE PRACTICE, OR INDUSTRY STANDARDS.

NVIDIA CORPORATION
2701 SAN TOMAS EXPRESSWAY
SANTA CLARA, CA 95050, USA

NV PN	600-11062-base-100		
PCB REV	P1062-B00	PAGE	
BOM REV	A	DATE	06-APR-2010

00029980 MSI CONFIDENTIAL FOR RMA (PDCC) 2011052301 ONLY

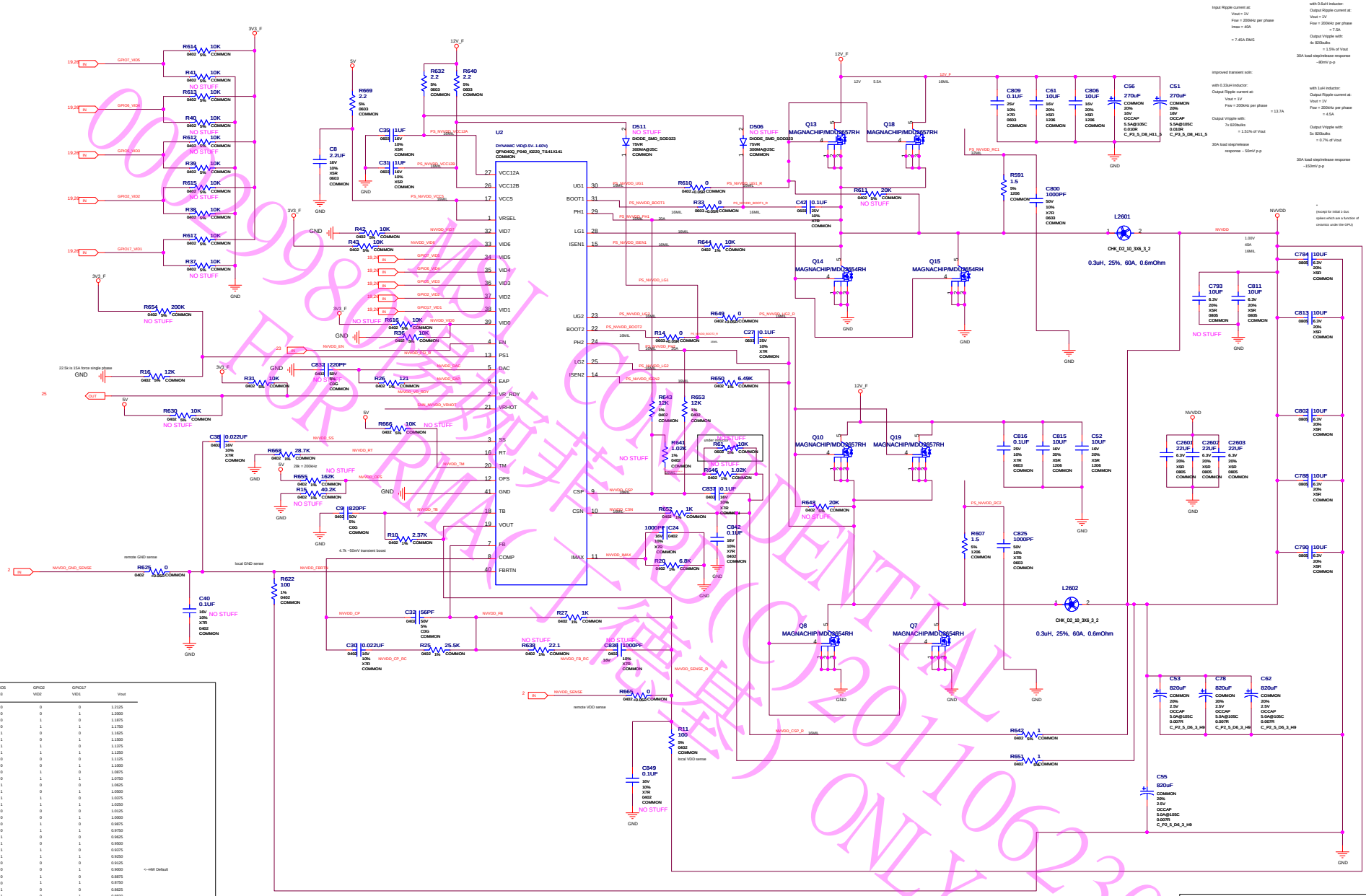

GPIO7 VID5	GPIO6 VID4	GPIO5 VID3	GPIO2 VID2	GPIO17 VID1	Vout	
0	0	0	0	0	1.2125	
0	0	0	0	1	1.2000	
0	0	0	1	0	1.1875	
0	0	0	1	1	1.1750	
0	0	1	0	0	1.1625	
0	0	1	0	1	1.1500	
0	0	1	1	0	1.1375	
0	0	1	1	1	1.1250	
0	1	0	0	0	1.1125	
0	1	0	0	1	1.1000	
0	1	0	1	0	1.0875	
0	1	0	1	1	1.0750	
0	1	1	0	0	1.0625	
0	1	1	0	1	1.0500	
0	1	1	1	0	1.0375	
0	1	1	1	1	1.0250	
1	0	0	0	0	1.0125	
1	0	0	0	1	1.0000	
1	0	0	1	0	0.9875	
1	0	0	1	1	0.9750	
1	0	1	0	0	0.9625	
1	0	1	0	1	0.9500	
1	0	1	1	0	0.9375	
1	0	1	1	1	0.9250	
1	1	0	0	0	0.9125	
1	1	0	0	1	0.9000	<--HW Default
1	1	0	1	0	0.8875	
1	1	0	1	1	0.8750	
1	1	1	0	0	0.8625	
1	1	1	0	1	0.8500	
1	1	1	1	0	0.8375	
1	1	1	1	1	0.8250	

ASSEMBLY	
PAGE DETAIL	NVVDD Power Supply

ALL NVIDIA DESIGN SPECIFICATIONS, REFERENCE SPECIFICATIONS, REFERENCE BOARDS, FILES, DRAWINGS, DIAGNOSTICS, LISTS AND OTHER DOCUMENTS OR INFORMATION (TOGETHER AND SEPARATELY, 'MATERIALS') ARE BEING PROVIDED 'AS IS'. THE MATERIALS MAY CONTAIN KNOWN AND UNKNOWN VIOLATIONS OR DEVIATIONS OF INDUSTRY STANDARDS AND SPECIFICATIONS. NVIDIA MAKES NO WARRANTIES, EXPRESSED, IMPLIED, STATUTORY OR OTHERWISE WITH RESPECT TO THE MATERIALS OR OTHERWISE, AND EXPRESSLY DISCLAIMS ALL IMPLIED WARRANTIES INCLUDING, WITHOUT LIMITATION, THE WARRANTIES OF DESIGN, OF NONINFRINGEMENT, MERCHANTABILITY OR FITNESS FOR A PARTICULAR PURPOSE, OR ARISING FROM A COURSE OF DEALING, TRADE USAGE, TRADE PRACTICE, OR INDUSTRY STANDARDS.

NVIDIA CORPORATION
2701 SAN TOMAS EXPRESSWAY
SANTA CLARA, CA 95050, USA

NV_PN	600-11062-base-100		
PCB REV	P1062-B00	PAGE	
BOM REV	A	DATE	06-APR-2010

CONFIDENTIAL © 2010 NVIDIA CORPORATION
FOR INTERNAL USE ONLY
600-11062-base-100

Thermal, Mechanical, and Bracket

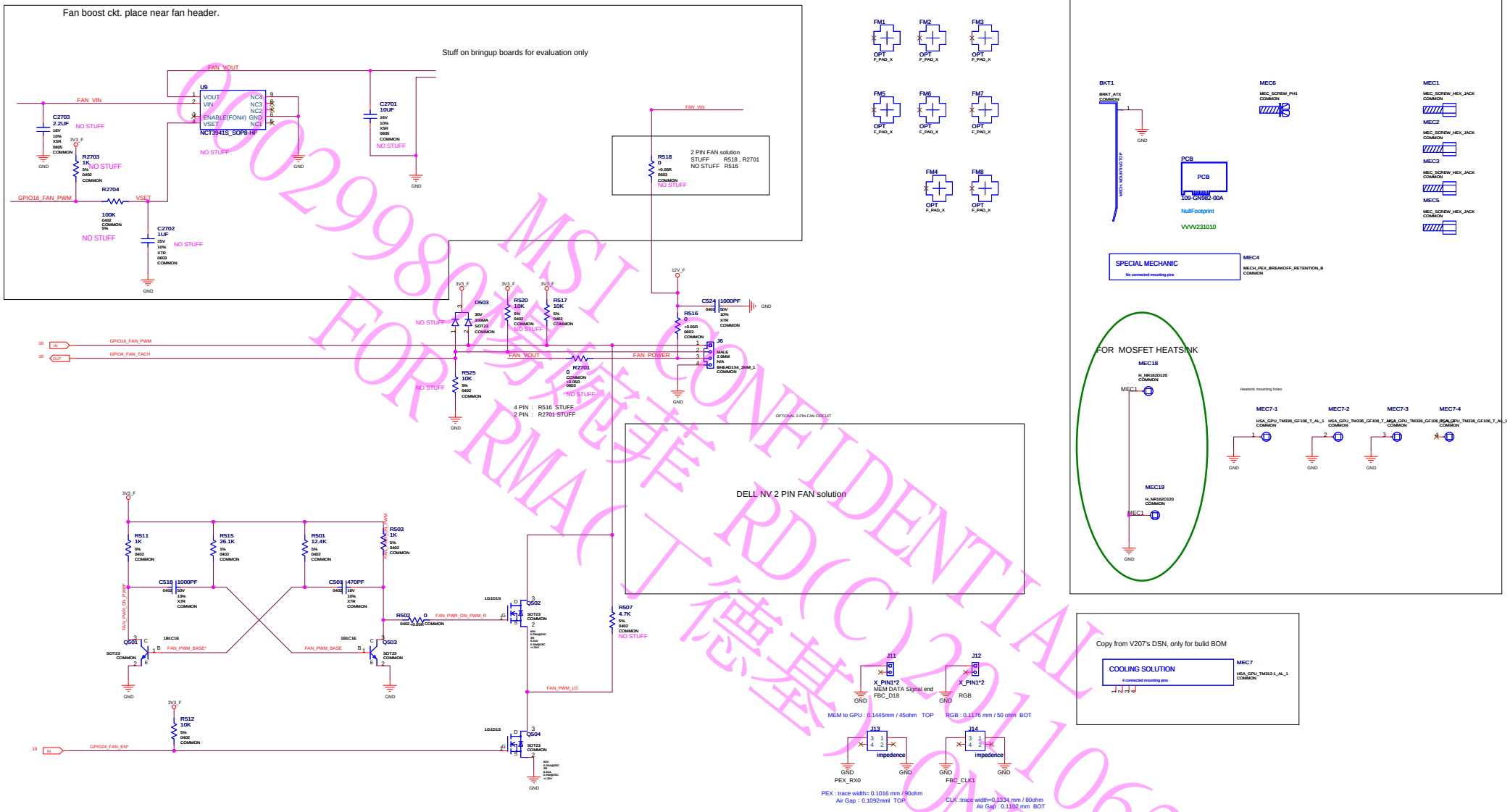

MSI CONFIDENTIAL
FOR RMA(C)2011062300
RD(C)2011062300
FOR RMA(丁德基)
ONLY

ASSEMBLY	P1062 BASE LEVEL GENERIC SCHEMATIC ONLY, COMMON & NO_STUFF ASSEMBLY NOTES AND BOM NOT FINAL
PAGE DETAIL	Fanboost VR, multivibrator, Thermal, and Mechanical

ALL NVIDIA DESIGN SPECIFICATIONS, REFERENCE SPECIFICATIONS, REFERENCE BOARDS, FILES, DRAWINGS, DIAGNOSTICS, LISTS AND OTHER DOCUMENTS OR INFORMATION (TOGETHER AND SEPARATELY, 'MATERIALS') ARE BEING PROVIDED 'AS IS'. THE MATERIALS MAY CONTAIN KNOWN AND UNKNOWN VIOLATIONS OR DEVIATIONS OF INDUSTRY STANDARDS AND SPECIFICATIONS. NVIDIA MAKES NO WARRANTIES, EXPRESSED, IMPLIED, STATUTORY OR OTHERWISE WITH RESPECT TO THE MATERIALS OR OTHERWISE, AND EXPRESSLY DISCLAIMS ALL IMPLIED WARRANTIES INCLUDING, WITHOUT LIMITATION, THE WARRANTIES OF DESIGN, OF NONINFRINGEMENT, MERCHANTABILITY OR FITNESS FOR A PARTICULAR PURPOSE, OR ARISING FROM A COURSE OF DEALING, TRADE USAGE, TRADE PRACTICE, OR INDUSTRY STANDARDS.

NVIDIA CORPORATION
2701 SAN TOMAS EXPRESSWAY
SANTA CLARA, CA 95050, USA

NV_PN	600-11062-base-100		
PCB REV	P1062-B00	PAGE	
BOM REV	A	DATE	06-APR-2010

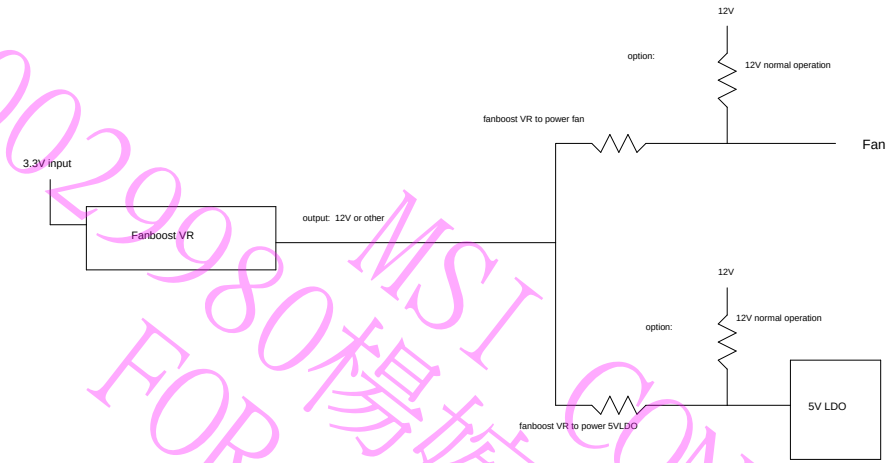

MSI CONFIDENTIAL
00029980楊婉菲 RD(C)20110623001
FOR RMA(丁德基) ONLY

ASSEMBLY	P1062 BASE LEVEL GENERIC SCHEMATIC ONLY, COMMON & NO_STUFF ASSEMBLY NOTES AND BOM NOT FINAL
PAGE DETAIL	Block diagram of 12V options for fan and 5VLDO

ALL NVIDIA DESIGN SPECIFICATIONS, REFERENCE SPECIFICATIONS, REFERENCE BOARDS, FILES, DRAWINGS, DIAGNOSTICS, LISTS AND OTHER DOCUMENTS OR INFORMATION (TOGETHER AND SEPARATELY, 'MATERIALS') ARE BEING PROVIDED 'AS IS'. THE MATERIALS MAY CONTAIN KNOWN AND UNKNOWN VIOLATIONS OR DEVIATIONS OF INDUSTRY STANDARDS AND SPECIFICATIONS. NVIDIA MAKES NO WARRANTIES, EXPRESSED, IMPLIED, STATUTORY OR OTHERWISE WITH RESPECT TO THE MATERIALS OR OTHERWISE, AND EXPRESSLY DISCLAIMS ALL IMPLIED WARRANTIES INCLUDING, WITHOUT LIMITATION, THE WARRANTIES OF DESIGN, OF NONINFRINGEMENT, MERCHANTABILITY OR FITNESS FOR A PARTICULAR PURPOSE, OR ARISING FROM A COURSE OF DEALING, TRADE USAGE, TRADE PRACTICE, OR INDUSTRY STANDARDS.

NVIDIA CORPORATION
2701 SAN TOMAS EXPRESSWAY
SANTA CLARA, CA 95050, USA

NV_PN	600-11062-base-100		
PCB REV	P1062-B00	PAGE	
BOM REV	A	DATE	06-APR-2010