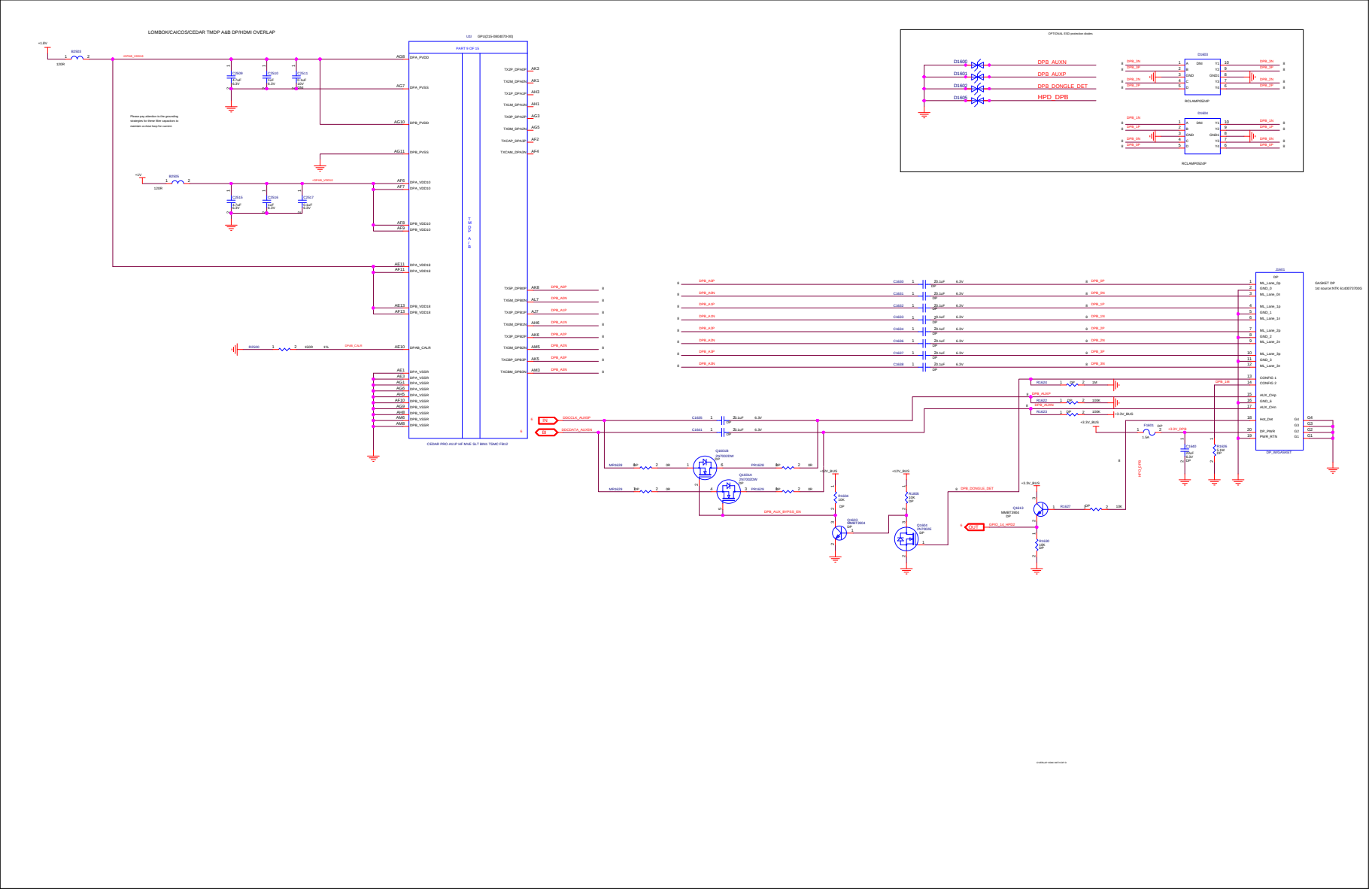
LOMBOK/CAICOS/CEDAR TMDP A&B DP/HDMI OVERLAP
U1 GPU215-080/870-00
PART 8 OF 15
TMDP A/B
CEDAR PRO A11P HF MVE SLT BINS TSMC FB12
OPTIONAL ESD protection diodes
D1600 DPB_AUXN
D1601 DPB_AUXP
D1602 DPB_DONGLE_DET
D1606 HPD_DPB
D1603
D1604
RCLAMP0524P
J1601
DP_WIGNAKAT
GASKET DP
1st source NTK 61400737000
Please pay attention to the grounding strategies for these film capacitors to maintain a clean loop for current.

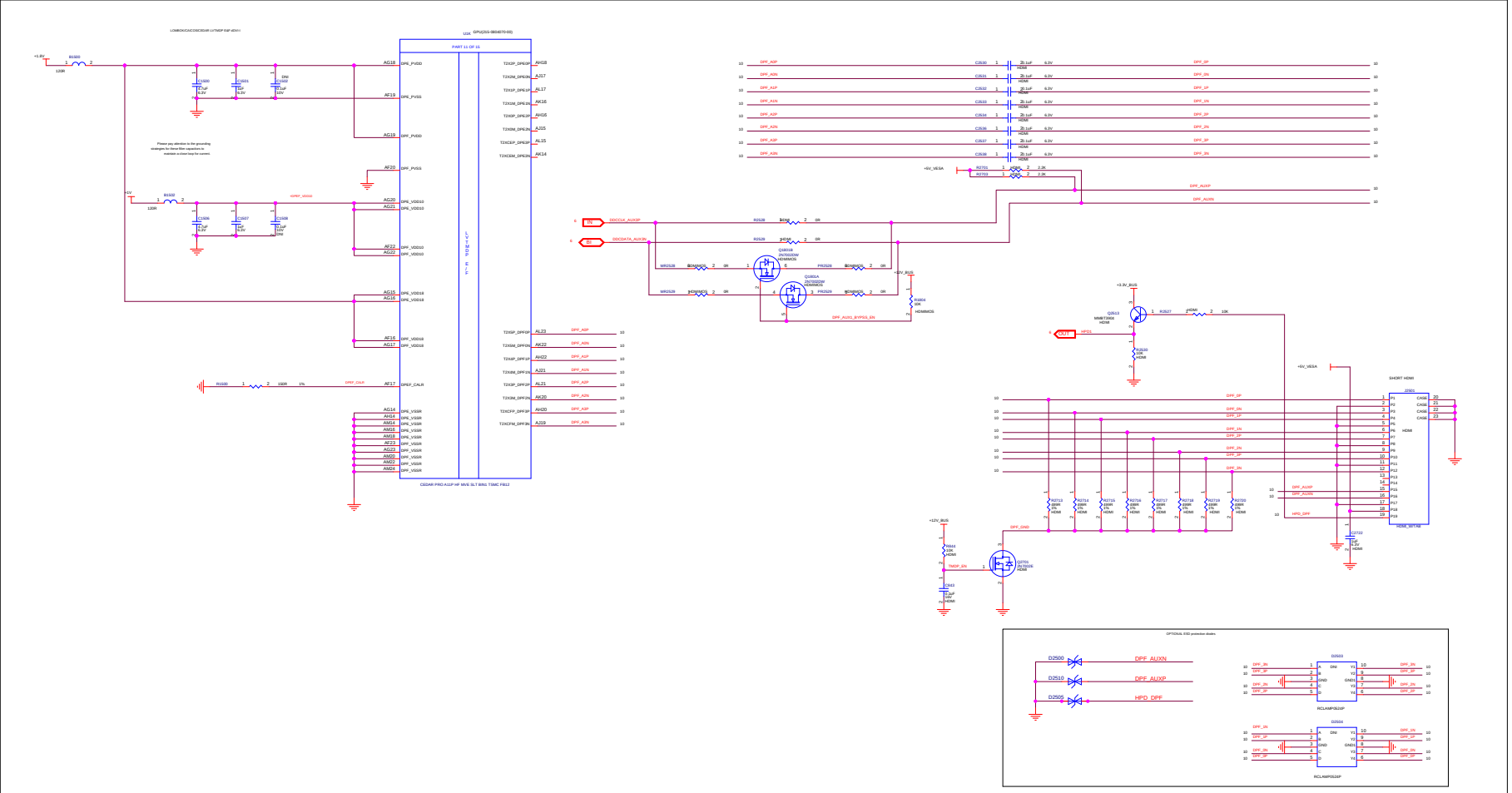

LOMBOKCACCDECKSIM LITMOP 8SP-eDIV1
U1K GPU(215-0804070-00)
PART 11 OF 15
CSDAR PRO A11P HF MVE SLT BING TSMC FB12
Please pay attention to the grounding strategies for these filter capacitors to maintain a clear loop for current.
DPF_AUXN
DPF_AUXP
HPD_DPF
SHORT HDMI
OPTIONAL ESD protection diodes
D2500
D2510
D2505
RCLAMP0524P

Mechanical and Thermal Management

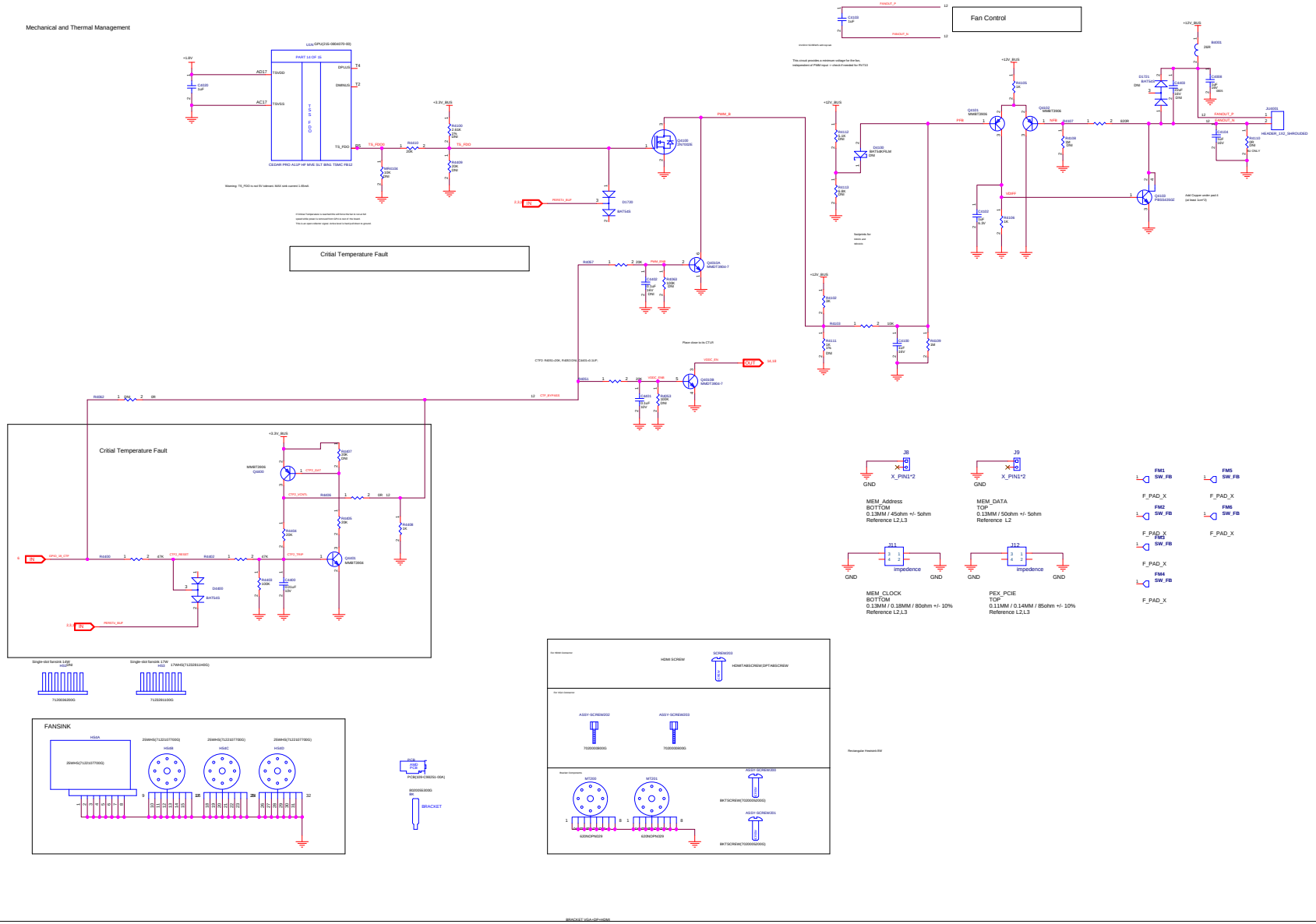

TABLE OF CONTENTS

SHEET NO.	SHEET NAME
1	TOC
2	PCI-E Edge Connector
3	CAICOS PCIE
4	CAICOS MEM
5	GDDR5
6	CAICOS GPIO STRAP PLL
7	CAICOS DAC
8	CAICOS TMDP AB DP
9	CAICOS TMDP C (UNUSED)
10	CAICOS LVTMDP E&F HDMI
11	CAICOS Power&GND
12	Mech/Thermal Management
13	Debug Circuit
14	PWR SEQ
15	1V
16	1.8V
17	5V
18	VDDC
19	MVDD
20	Diagram
21	REVISION HISTORY

GROUP NAME DESCRIPTION	
COMMON	INSTALLED IN MAIN BOM
NOPN	NO PN WON'T BE IN BOM
DNI	DONT INSTALL
INT	INTERNAL BOM, WON'T BE IN PRODUCTION BOM
GPU	GPU PN
BK	BRACKET
HS	HEATSINK OR FANSINK
BACO	BACO circuit
SUBBOM	SUBBOM PN
SUB BOM	
MEM	MEMORY SUB BOM
DEBUG	DEBUG SUB BOM
POWER SUB BOM	
VDDC	VDDC SUB BOM
VDDCI	VDDCI SUB BOM
MVDD	MVDD SUB BOM

AMD - PLATFORM HARDWARE ENG
#48, No.1387, ZHANGDONG ROAD
SHANGHAI, CHINA 201203

SHEET:	TOC
DATE:	Thu Jun 04 06:11:34 2015
REV:	1.0
SHEET NUMBER:	1 OF 21
DOCUMENT NUMBER:	105-C982xx-00A
NOTES:	NOTE

CONFIDENTIAL AND PROPRIETARY TO ADVANCED MICRO DEVICES INC.

© 2014 Advanced Micro Devices

This AMD Board schematic and design is the exclusive property of AMD, and is provided only to entities under a non-disclosure agreement with AMD for evaluation purposes. Further distribution or disclosure is strictly prohibited. Use of this schematic and design for any purpose other than evaluation requires a Board Technology License Agreement with AMD. AMD makes no representations or warranties of any kind regarding this schematic and design, including, not limited to, any implied warranty of merchantability or fitness for a particular purpose, and disclaims responsibility for any consequences resulting from use of the information included herein.

TITLE:

Calcos G5 VGA+DP+HDMI 25W ASIC, 5.7"

PCI-EXPRESS EDGE CONNECTOR

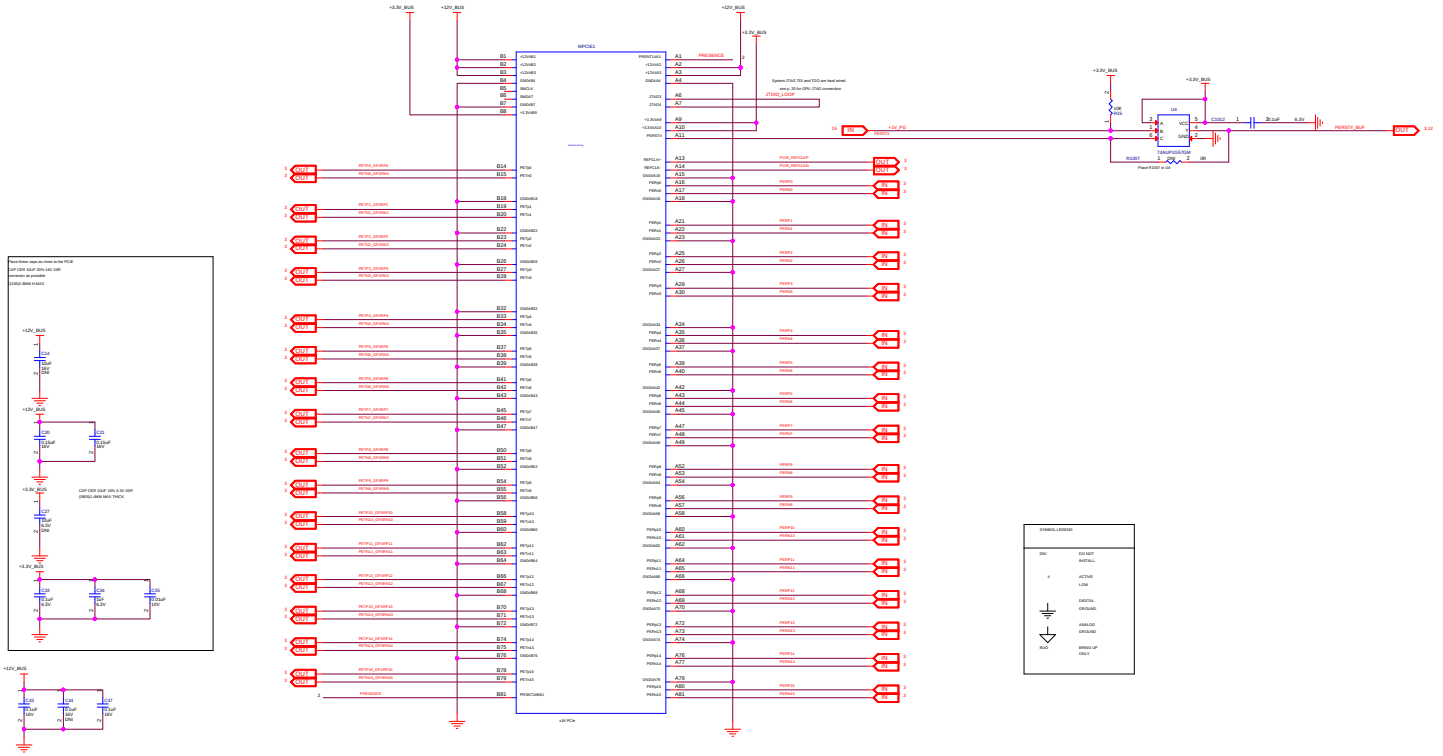

AMD - PLATFORM HARDWARE ENG #48, No.1387, ZHANGDONG ROAD SHANGHAI, CHINA 201203	
SHEET:	PCI-E Edge Connector
DATE:	Thu Jun 04 06:11:34 2015
REV:	1.0
SHEET NUMBER:	2 OF 21
DOCUMENT NUMBER:	105-C982xx-00A
NOTES:	NOTE

CONFIDENTIAL AND PROPRIETARY TO ADVANCED MICRO DEVICES INC.
© 2014 Advanced Micro Devices
This AMD Board schematic and design is the exclusive property of AMD, and is provided only to entities under a non-disclosure agreement with AMD for evaluation purposes. Further distribution or disclosure is strictly prohibited. Use of this schematic and design for any purpose other than evaluation requires a Board Technology License Agreement with AMD. AMD makes no representations or warranties of any kind regarding this schematic and design, including, not limited to, any implied warranty of merchantability or fitness for a particular purpose, and disclaims responsibility for any consequences resulting from use of the information included herein.

TITLE: Calcos G5 VGA+DP+HDMI 25W ASIC, 5.7"

LOMBOK/CAICOS/CEDAR PCIe Interface

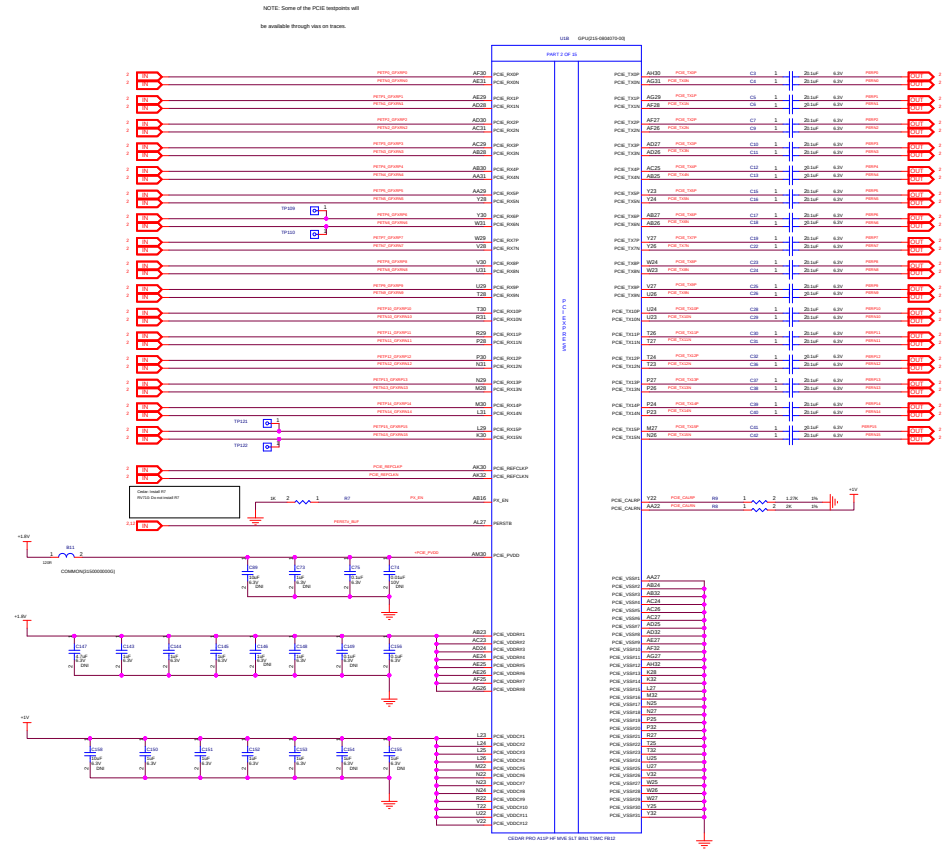

AMD - PLATFORM HARDWARE ENG
#48, No.1387, ZHANGDONG ROAD
SHANGHAI, CHINA 201203

SHEET:	CAICOS PCIE
DATE:	Thu Jun 04 08:11:35 2015
REV:	1.0
SHEET NUMBER:	3 OF 21
DOCUMENT NUMBER:	105-C982xx-00A
NOTES:	NOTE

CONFIDENTIAL AND PROPRIETARY TO ADVANCED MICRO DEVICES INC.
© 2014 Advanced Micro Devices
This AMD Board schematic and design is the exclusive property of AMD, and is provided only to entities under a non-disclosure agreement with AMD for evaluation purposes. Further distribution or disclosure is strictly prohibited. Use of this schematic and design for any purpose other than evaluation requires a Board Technology License Agreement with AMD. AMD makes no representations or warranties of any kind regarding this schematic and design, including, not limited to, any implied warranty of merchantability or fitness for a particular purpose, and disclaims responsibility for any consequences resulting from use of the information included herein.

TITLE: Caicos G5 VGA+DP+HDMI 25W ASIC, 5.7"

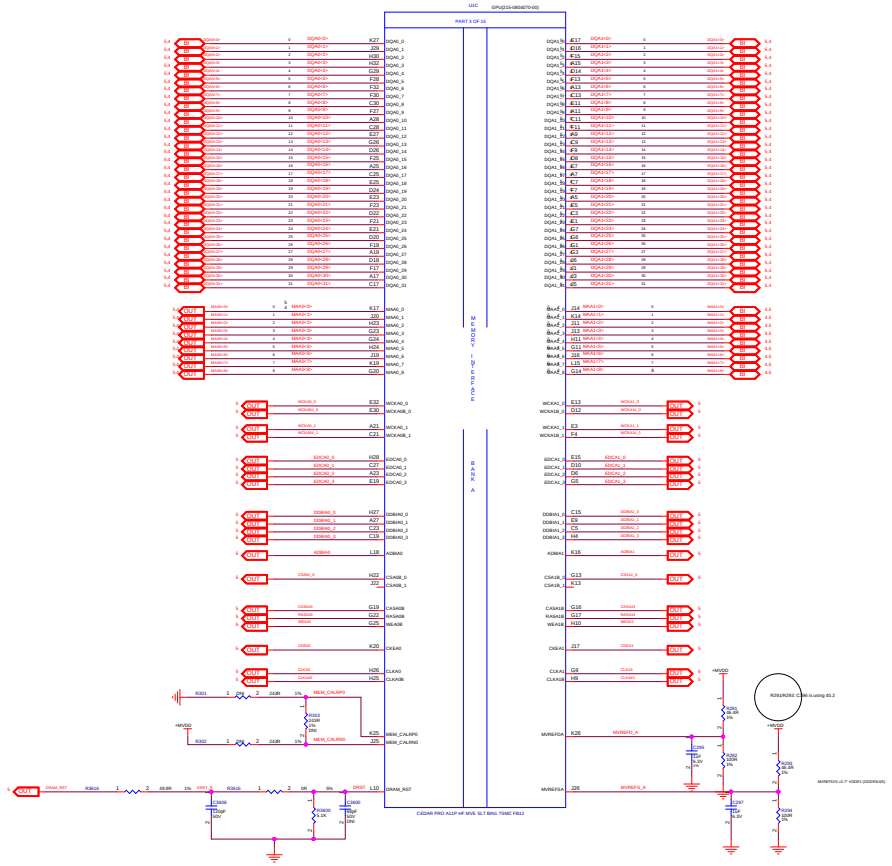

AMD - PLATFORM HARDWARE ENG #48, No.1387, ZHANGDONG ROAD SHANGHAI, CHINA 201203	
SHEET: CAICOS MEM	
DATE: Thu Jun 04 08:11:35 2015	REV: 1.0
SHEET NUMBER: 4 OF 21	
DOCUMENT NUMBER: 105-C982xx-00A	
NOTES: NOTE	

CONFIDENTIAL AND PROPRIETARY TO ADVANCED MICRO DEVICES INC.
© 2014 Advanced Micro Devices
This AMD Board schematic and design is the exclusive property of AMD, and is provided only to entities under a non-disclosure agreement with AMD for evaluation purposes. Further distribution or disclosure is strictly prohibited. Use of this schematic and design for any purpose other than evaluation requires a Board Technology License Agreement with AMD. AMD makes no representations or warranties of any kind regarding this schematic and design, including, not limited to, any implied warranty of merchantability or fitness for a particular purpose, and disclaims responsibility for any consequences resulting from use of the information included herein.

TITLE: Caicos G5 VGA+DP+HDMI 25W ASIC, 5.7"

2pcs GDDR5 x32

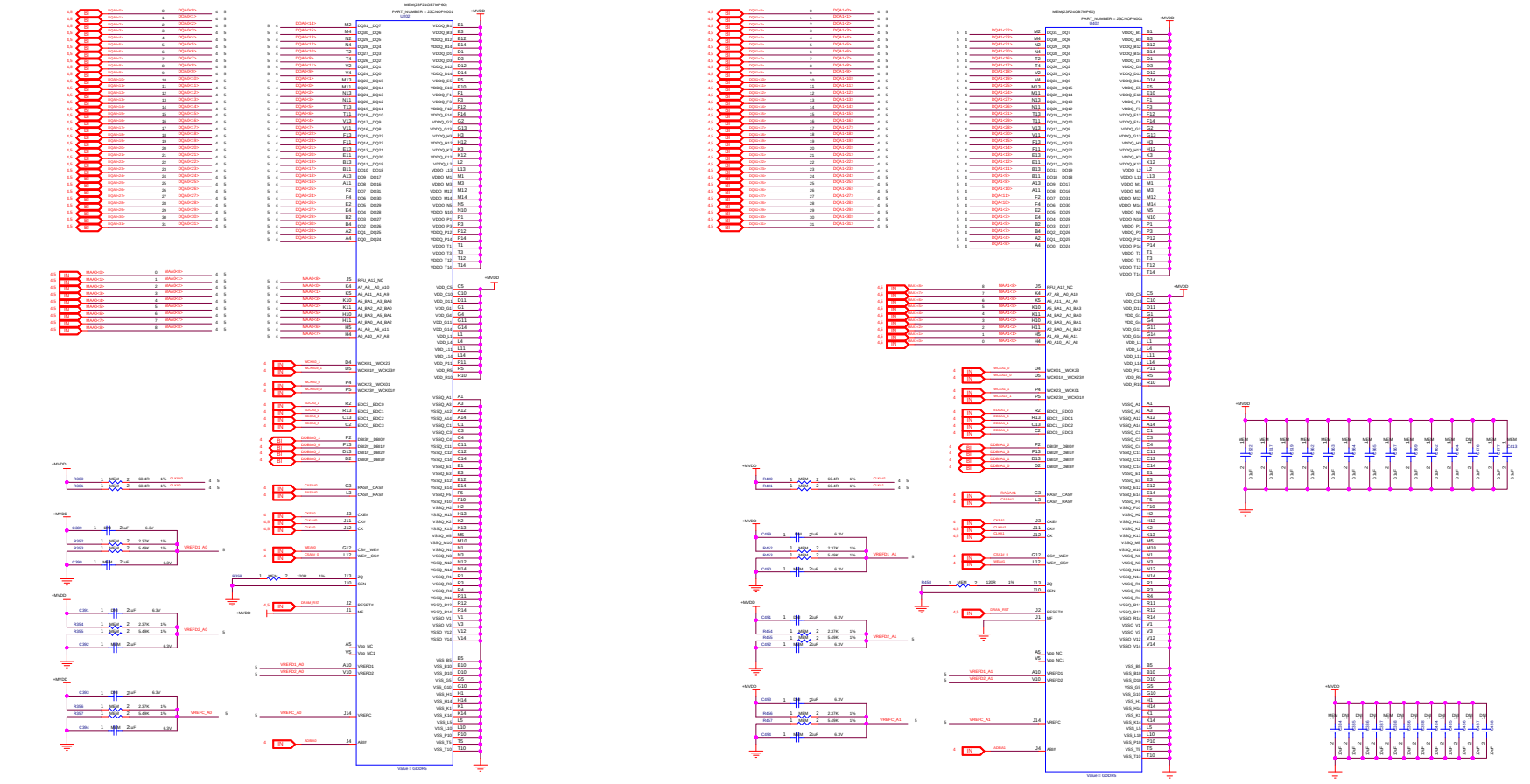

AMD - PLATFORM HARDWARE ENG #48, No.1387, ZHANGDONG ROAD SHANGHAI, CHINA 201203	
SHEET: GDDR5	
DATE: Thu Jun 04 06:11:36 2015	REV: 1.0
SHEET NUMBER: 5 OF 21	
DOCUMENT NUMBER: 105-C982xx-00A	
NOTES: NOTE	

CONFIDENTIAL AND PROPRIETARY TO ADVANCED MICRO DEVICES INC.
© 2014 Advanced Micro Devices
This AMD Board schematic and design is the exclusive property of AMD, and is provided only to entities under a non-disclosure agreement with AMD for evaluation purposes. Further distribution or disclosure is strictly prohibited. Use of this schematic and design for any purpose other than evaluation requires a Board Technology License Agreement with AMD. AMD makes no representations or warranties of any kind regarding this schematic and design, including, not limited to, any implied warranty of merchantability or fitness for a particular purpose, and disclaims responsibility for any consequences resulting from use of the information included herein.

TITLE: Calcos G5 VGA+DP+HDMI 25W ASIC, 5.7"

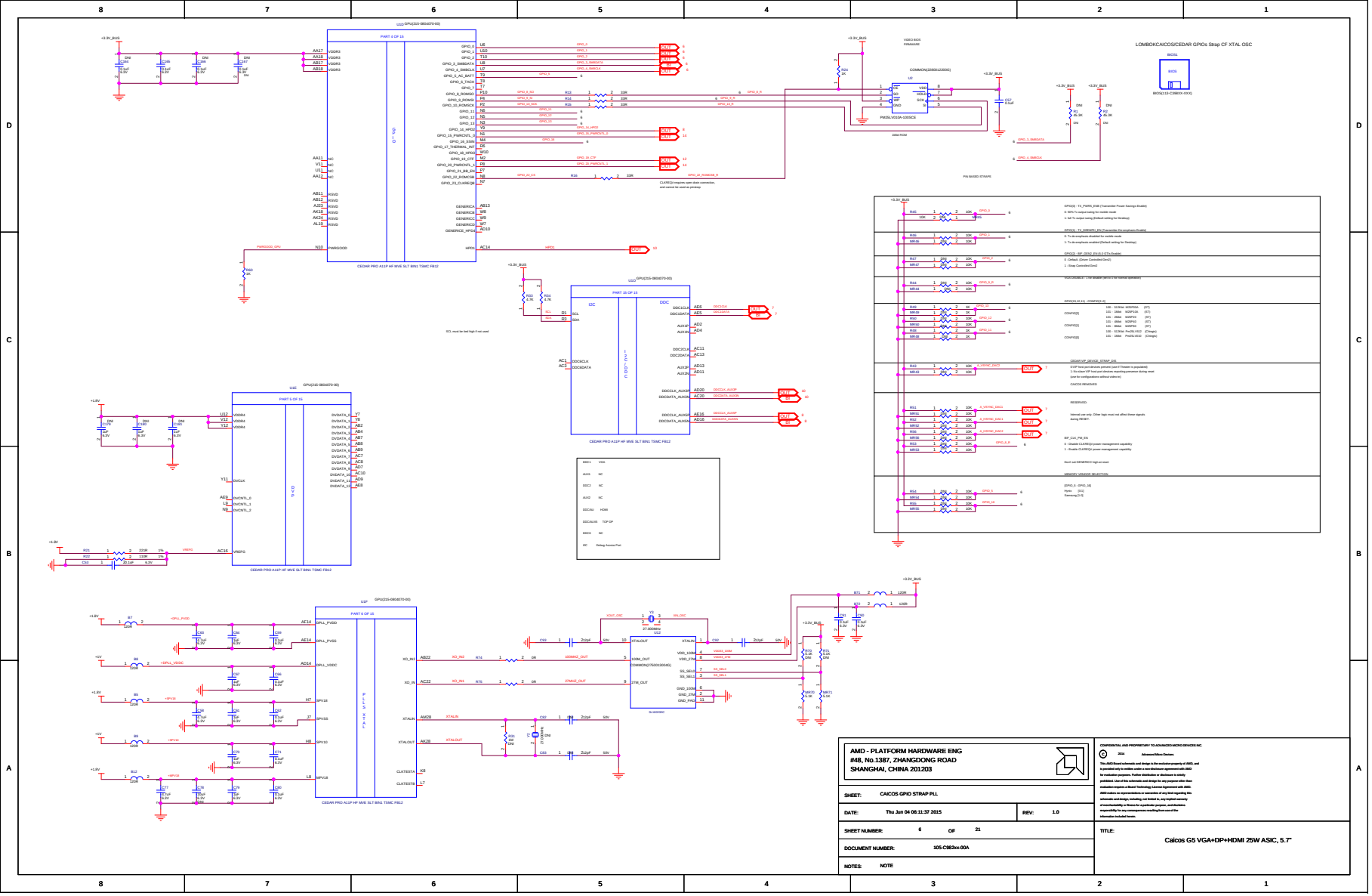
LOMBOKCAICOS/CEDAR GPIOs Strap CF XTAL OSC
BIOS1
BIOS
MICRO-LCB-CSB8DX-XXXQ
COMMON(2350012200G)
PM25LV010A-100SCE
1Mbit ROM
VIDEO BIOS FIRMWARE
PIN BASED STRAPS
CEDAR PRO A11P HF MV6 SLT BIN1 TSMC FB12
GPU(215-0804070-00)
CLKREQ# requires open drain connection, and cannot be used as pinstrap
SCL must be tied high if not used
GPIO[2] - TX_PWRS_ENB (Transmitter Power Savings Enable)
0: 92% Tx output swing for mobile mode
1: full Tx output swing (Default setting for Desktop)
GPIO[1] - TX_DEEMPH_EN (Transmitter De-emphasis Enable)
0: Tx de-emphasis disabled for mobile mode
1: Tx de-emphasis enabled (Default setting for Desktop)
GPIO[2] - BIF_GEN2_EN,(0-1) CTI's Enable)
0 : Default, (Gen1 Controlled Gen2)
1 : Strap Controlled Gen2
GPIO[3:0],11) : CONFIG[3:0]
CONFIG[2]
CONFIG[1]
CONFIG[0]
CEDAR VIP_DEVICE_STRAP_EN
0:VIP host port devices present (use if Theater is populated)
1: No slave VIP host port devices requesting presence during reset
(use for configurations without video in)
CAICOS REMOVED
RESERVED
Internal use only. Other logic must not affect these signals during RESET.
BIF_CLK_PM_EN
0 : Disable CLKREQ# power management capability
1 : Enable CLKREQ# power management capability
Don't set GENERIC2 high at reset
MEMORY VENDOR SELECTION
[GPIO_3 : GPIO_10]
Hynix [D1]
Samsung [1-0]
AMD - PLATFORM HARDWARE ENG
#48, No.1387, ZHANGDONG ROAD
SHANGHAI, CHINA 201203
SHEET: CAICOS GPIO STRAP PLL
DATE: Thu Jun 04 06:11:37 2015
REV: 1.0
SHEET NUMBER: 6 OF 21
DOCUMENT NUMBER: 105-C982xx-00A
NOTES: NOTE
CONFIDENTIAL AND PROPRIETARY TO ADVANCED MICRO DEVICES INC.
© 2014 Advanced Micro Devices
This AMD Board schematic and design is the exclusive property of AMD, and is provided only to entities under a non-disclosure agreement with AMD for evaluation purposes. Further distribution or disclosure is strictly prohibited. Use of this schematic and design for any purpose other than evaluation requires a Board Technology License Agreement with AMD. AMD makes no representations or warranties of any kind regarding this schematic and design, including, not limited to, any implied warranty of merchantability or fitness for a particular purpose, and disclaims responsibility for any consequences resulting from use of the information included herein.
TITLE: Caicos G5 VGA+DP+HDMI 25W ASIC, 5.7"

LOMBOK/CAICOS/CEDAR DAC1

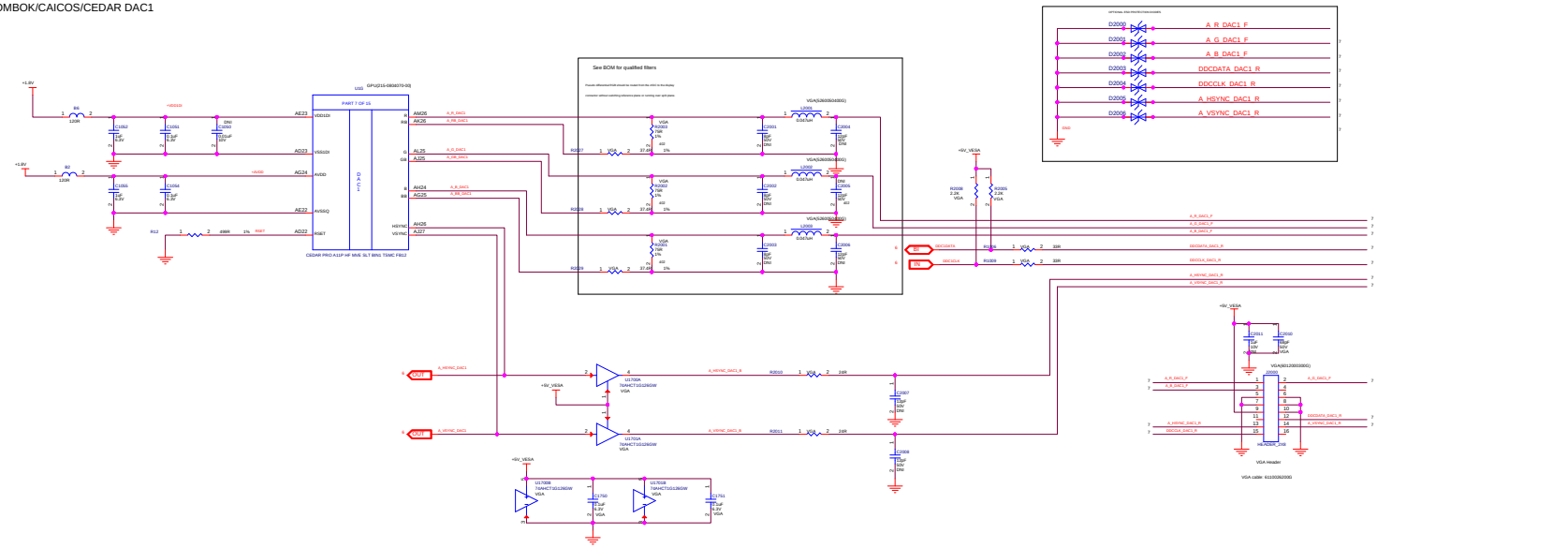

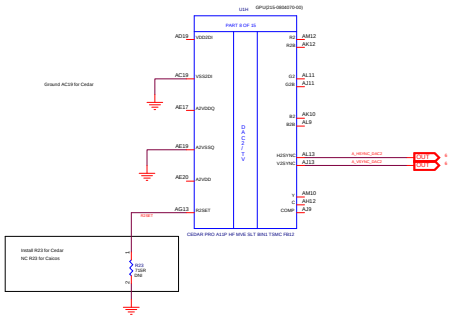

AMD - PLATFORM HARDWARE ENG #48, No.1387, ZHANGDONG ROAD SHANGHAI, CHINA 201203	
SHEET: CAICOS DAC	
DATE: Thu Jun 04 06:11:37 2015	REV: 1.0
SHEET NUMBER: 7 OF 21	
DOCUMENT NUMBER: 105-C982xx-00A	
NOTES: NOTE	

CONFIDENTIAL AND PROPRIETARY TO ADVANCED MICRO DEVICES INC.

© 2014 Advanced Micro Devices

This AMD Board schematic and design is the exclusive property of AMD, and is provided only to entities under a non-disclosure agreement with AMD for evaluation purposes. Further distribution or disclosure is strictly prohibited. Use of this schematic and design for any purpose other than evaluation requires a Board Technology Licensor Agreement with AMD. AMD makes no representations or warranties of any kind regarding this schematic and design, including, not limited to, any implied warranty of merchantability or fitness for a particular purpose, and disclaims responsibility for any consequences resulting from use of the information included herein.

TITLE: Caicos G5 VGA+DP+HDMI 25W ASIC, 5.7"

LOMBOK/CAICOS/CEDAR Display Port C (Unused)

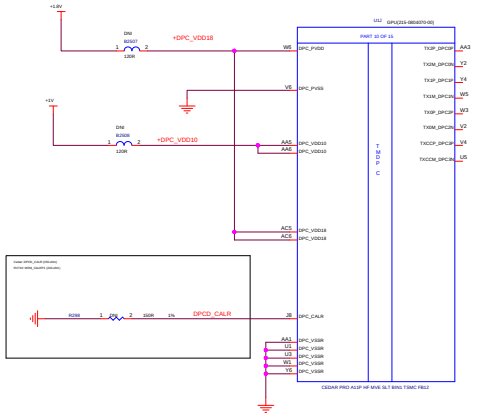

AMD - PLATFORM HARDWARE ENG #48, No.1387, ZHANGDONG ROAD SHANGHAI, CHINA 201203	
SHEET: CAICOS TMDP C (UNUSED)	
DATE: Thu May 28 03:09:00 2015	REV: 1.0
SHEET NUMBER: 9 OF 21	
DOCUMENT NUMBER: 105-C982xx-00A	

CONFIDENTIAL AND PROPRIETARY TO ADVANCED MICRO DEVICES INC.
© 2014 Advanced Micro Devices
This AMD Board schematic and design is the exclusive property of AMD, and is provided only to entities under a non-disclosure agreement with AMD for evaluation purposes. Further distribution or disclosure is strictly prohibited. Use of this schematic and design for any purpose other than evaluation requires a Board Technology License Agreement with AMD. AMD makes no representations or warranties of any kind regarding this schematic and design, including, not limited to, any implied warranty of merchantability or fitness for a particular purpose, and disclaims responsibility for any consequences resulting from use of the information included herein.

TITLE: Caicos G5 VGA+DP+HDMI 25W ASIC, 5.7"

LOMBOK/CAICOS/CEDAR Power & GND

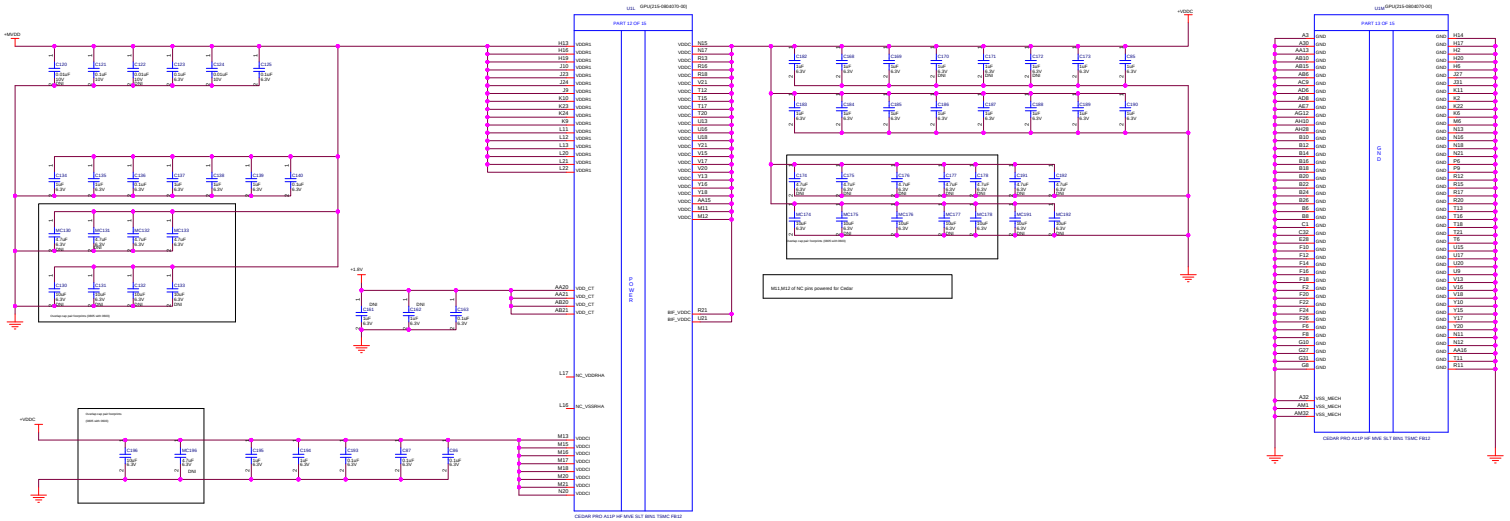

AMD - PLATFORM HARDWARE ENG
#48, No.1387, ZHANGDONG ROAD
SHANGHAI, CHINA 201203

SHEET:	CAICOS Power&GND		
DATE:	Thu May 28 03:09:00 2015	REV:	1.0
SHEET NUMBER:	11	OF	21
DOCUMENT NUMBER:	105-C982xx-00A		

CONFIDENTIAL AND PROPRIETARY TO ADVANCED MICRO DEVICES INC.

© 2014 Advanced Micro Devices

This AMD Board schematic and design is the exclusive property of AMD, and is provided only to entities under a non-disclosure agreement with AMD for evaluation purposes. Further distribution or disclosure is strictly prohibited. Use of this schematic and design for any purpose other than evaluation requires a Board Technology License Agreement with AMD. AMD makes no representations or warranties of any kind regarding this schematic and design, including, not limited to, any implied warranty of merchantability or fitness for a particular purpose, and disclaims responsibility for any consequences resulting from use of the information included herein.

TITLE:

Caicos G5 VGA+DP+HDMI 25W ASIC, 5.7"

(19) Debug Circuits

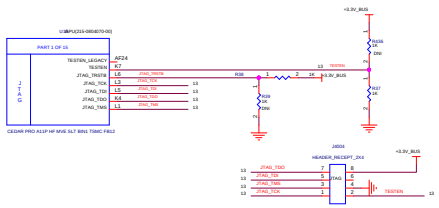

AMD - PLATFORM HARDWARE ENG #48, No.1387, ZHANGDONG ROAD SHANGHAI, CHINA 201203	
SHEET: Debug Circuit	
DATE: Thu May 28 03:09:00 2015	REV: 1.0
SHEET NUMBER: 13 OF 21	
DOCUMENT NUMBER: 105-C982xx-00A	

CONFIDENTIAL AND PROPRIETARY TO ADVANCED MICRO DEVICES INC.
© 2014 Advanced Micro Devices
This AMD Board schematic and design is the exclusive property of AMD, and is provided only to entities under a non-disclosure agreement with AMD for evaluation purposes. Further distribution or disclosure is strictly prohibited. Use of this schematic and design for any purpose other than evaluation requires a Board Technology License Agreement with AMD. AMD makes no representations or warranties of any kind regarding this schematic and design, including, not limited to, any implied warranty of merchantability or fitness for a particular purpose, and disclaims responsibility for any consequences resulting from use of the information included herein.

TITLE:

Caicos G5 VGA+DP+HDMI 25W ASIC, 5.7"

Power Management - Power Gating and Dynamic Voltage Control

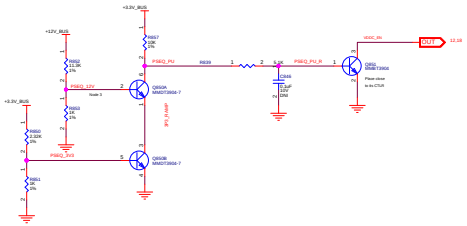

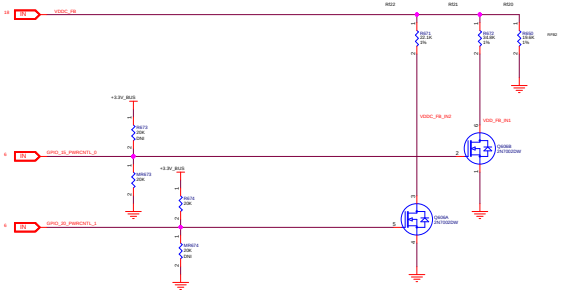

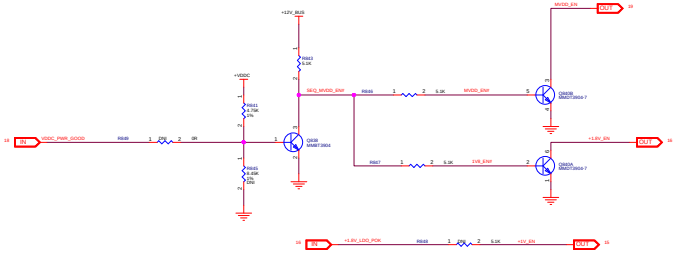

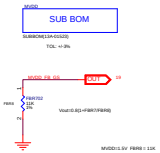

MEM

SUB BOM

SUBBOM(13B-00920)

256Mx16 1.5V 1GHz
HYNIX(13B-00827) SAMSUNG(13B-00828)

VDDC

SUB BOM

SUBBOM(13A-01522)

TOL: +/-3%

MVDD

SUB BOM

SUBBOM(13A-01523)

TOL: +/-3%

AMD - PLATFORM HARDWARE ENG #48, No.1387, ZHANGDONG ROAD SHANGHAI, CHINA 201203	
SHEET: PWR SEQ	
DATE: Thu May 28 03:08:58 2015	REV: 1.0
SHEET NUMBER: 14 OF 21	
DOCUMENT NUMBER: 105-C982xx-00A	

CONFIDENTIAL AND PROPRIETARY TO ADVANCED MICRO DEVICES INC.
© 2014 Advanced Micro Devices
This AMD Board schematic and design is the exclusive property of AMD, and is provided only to entities under a non-disclosure agreement with AMD for evaluation purposes. Further distribution or disclosure is strictly prohibited. Use of this schematic and design for any purpose other than evaluation requires a Board Technology License Agreement with AMD. AMD makes no representations or warranties of any kind regarding this schematic and design, including, not limited to, any implied warranty of merchantability or fitness for a particular purpose, and disclaims responsibility for any consequences resulting from use of the information included herein.

TITLE:

Calcos G5 VGA+DP+HDMI 25W ASIC, 5.7"

Linear Regulators

LDO #1: Vin = +1.5V +/-2% Vout = 1V +/- 2%; Iout = 3A MAX

PCB: 50 to 70mm sq. copper area for cooling

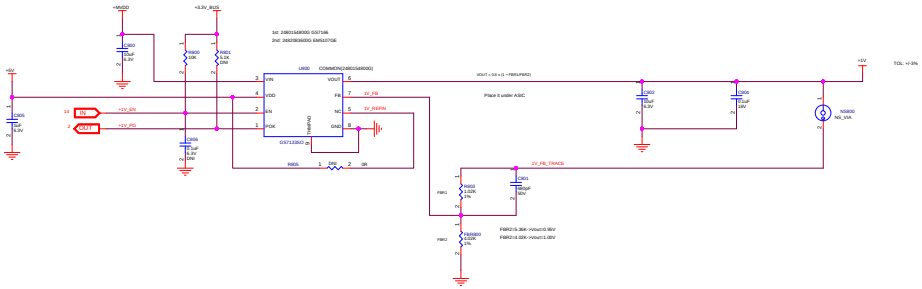

AMD - PLATFORM HARDWARE ENG #48, No.1387, ZHANGDONG ROAD SHANGHAI, CHINA 201203	CONFIDENTIAL AND PROPRIETARY TO ADVANCED MICRO DEVICES INC. © 2014 Advanced Micro Devices This AMD Board schematic and design is the exclusive property of AMD, and is provided only to entities under a non-disclosure agreement with AMD for evaluation purposes. Further distribution or disclosure is strictly prohibited. Use of this schematic and design for any purpose other than evaluation requires a Board Technology License Agreement with AMD. AMD makes no representations or warranties of any kind regarding this schematic and design, including, not limited to, any implied warranty of merchantability or fitness for a particular purpose, and disclaims responsibility for any consequences resulting from use of the information included herein.
SHEET: 1V	
DATE: Thu Jun 04 08:11:37 2015 REV: 1.0	
SHEET NUMBER: 15 OF 21	TITLE: Calcos G5 VGA+DP+HDMI 25W ASIC, 5.7"
DOCUMENT NUMBER: 105-C982xx-00A	
NOTES: NOTE	

Linear Regulators

LDO #2: Vin = 3.00V to 3.60V (3.3V +/- 9%) Vout = +1.8V +/- 2%; Iout = 1A MAX

PCB: 50 to 70mm sq. copper area for cooling

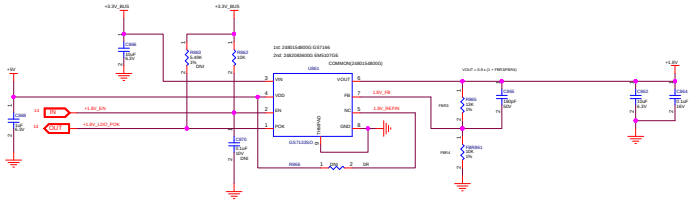

AMD - PLATFORM HARDWARE ENG #48, No.1387, ZHANGDONG ROAD SHANGHAI, CHINA 201203	
SHEET: 1.8V	
DATE: Thu May 28 03:08:59 2015	REV: 1.0
SHEET NUMBER: 16 OF 21	
DOCUMENT NUMBER: 105-C982xx-00A	

CONFIDENTIAL AND PROPRIETARY TO ADVANCED MICRO DEVICES INC.

© 2014 Advanced Micro Devices

This AMD Board schematic and design is the exclusive property of AMD, and is provided only to entities under a non-disclosure agreement with AMD for evaluation purposes. Further distribution or disclosure is strictly prohibited. Use of this schematic and design for any purpose other than evaluation requires a Board Technology License Agreement with AMD. AMD makes no representations or warranties of any kind regarding this schematic and design, including, not limited to, any implied warranty of merchantability or fitness for a particular purpose, and disclaims responsibility for any consequences resulting from use of the information included herein.

TITLE: Caicos G5 VGA+DP+HDMI 25W ASIC, 5.7"

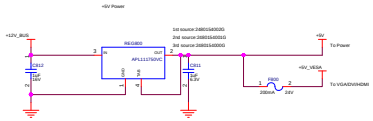

AMD - PLATFORM HARDWARE ENG #48, No.1387, ZHANGDONG ROAD SHANGHAI, CHINA 201203	
SHEET: 5V	
DATE: Thu Jun 04 06:11:37 2015	REV: 1.0
SHEET NUMBER: 17 OF 21	
DOCUMENT NUMBER: 105-C982xx-00A	
NOTES: NOTE	

CONFIDENTIAL AND PROPRIETARY TO ADVANCED MICRO DEVICES INC.
© 2014 Advanced Micro Devices
This AMD Board schematic and design is the exclusive property of AMD, and is provided only to entities under a non-disclosure agreement with AMD for evaluation purposes. Further distribution or disclosure is strictly prohibited. Use of this schematic and design for any purpose other than evaluation requires a Board Technology License Agreement with AMD. AMD makes no representations or warranties of any kind regarding this schematic and design, including, not limited to, any implied warranty of merchantability or fitness for a particular purpose, and disclaims responsibility for any consequences resulting from use of the information included herein.

TITLE: Calcos G5 VGA+DP+HDMI 25W ASIC, 5.7"

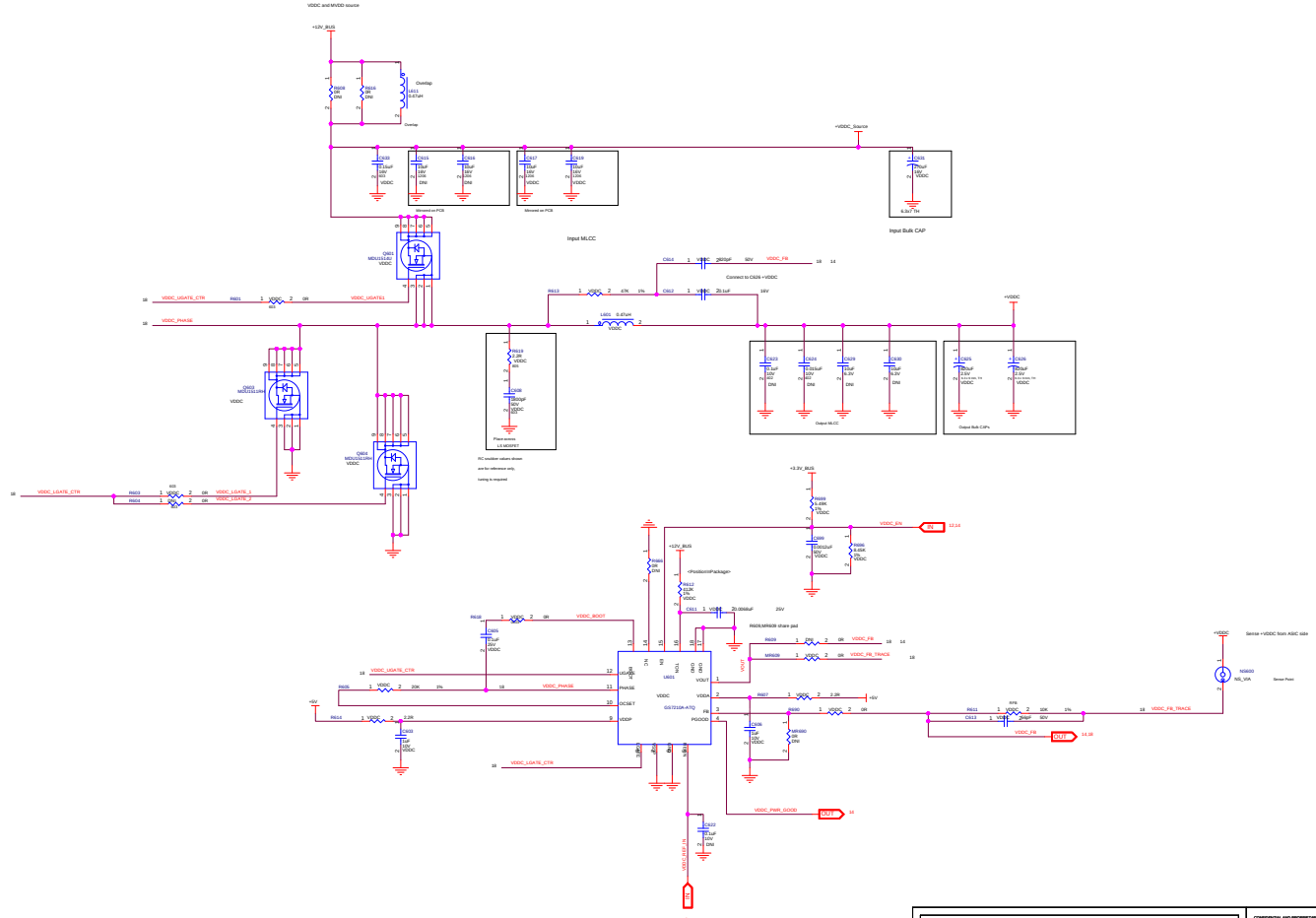

AMD - PLATFORM HARDWARE ENG #48, No.1387, ZHANGDONG ROAD SHANGHAI, CHINA 201203	
SHEET: VDDC	
DATE: Thu May 28 03:08:57 2015	REV: 1.0
SHEET NUMBER: 18 OF 21	
DOCUMENT NUMBER: 105-C982xx-00A	

CONFIDENTIAL AND PROPRIETARY TO ADVANCED MICRO DEVICES INC.
© 2014 Advanced Micro Devices
This AMD Board schematic and design is the exclusive property of AMD, and is provided only to entities under a non-disclosure agreement with AMD for evaluation purposes. Further distribution or disclosure is strictly prohibited. Use of this schematic and design for any purpose other than evaluation requires a Board Technology License Agreement with AMD. AMD makes no representations or warranties of any kind regarding this schematic and design, including, not limited to, any implied warranty of merchantability or fitness for a particular purpose, and disclaims responsibility for any consequences resulting from use of the information included herein.

TITLE: Caicos G5 VGA+DP+HDMI 25W ASIC, 5.7"

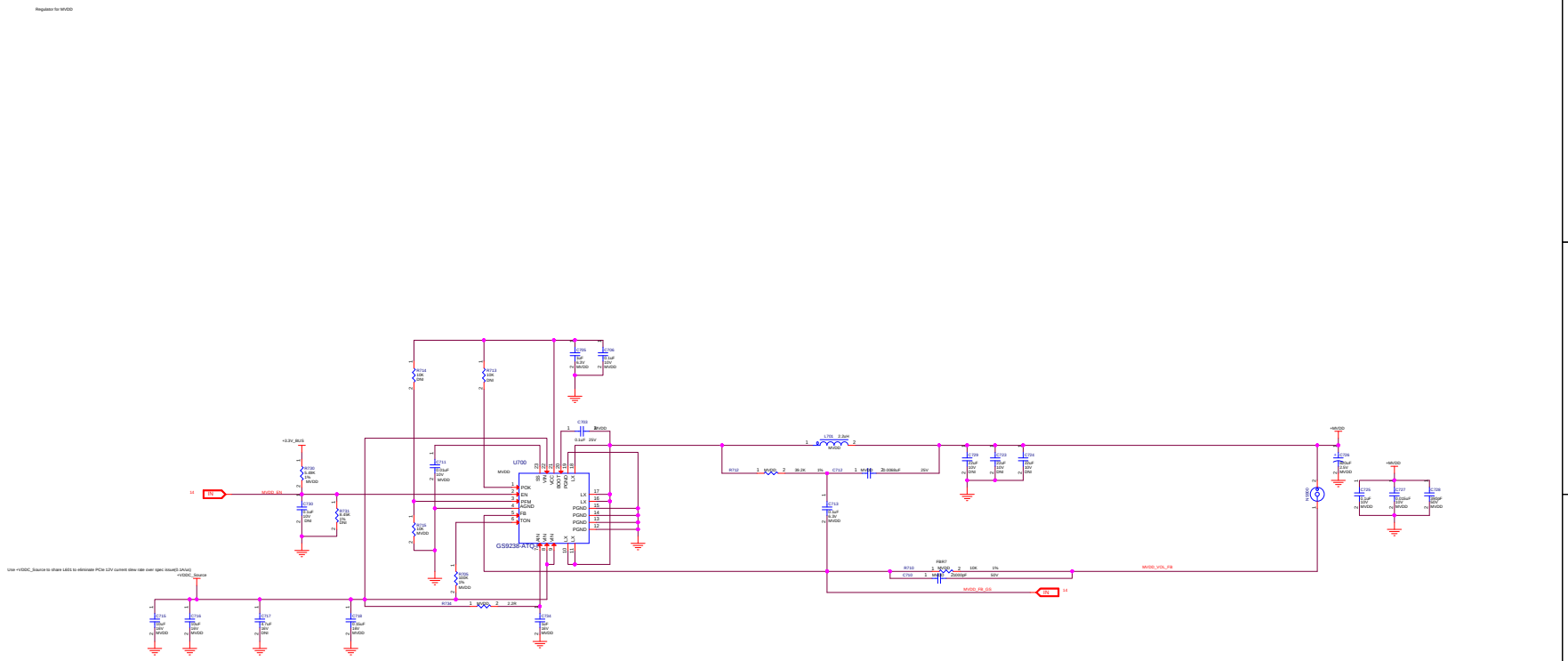

AMD - PLATFORM HARDWARE ENG #48, No.1387, ZHANGDONG ROAD SHANGHAI, CHINA 201203	
SHEET: MVDD	
DATE: Thu May 28 03:08:58 2015	REV: 1.0
SHEET NUMBER: 19 19 OF 21 21	
DOCUMENT NUMBER: 105-C982xx-00A	

CONFIDENTIAL AND PROPRIETARY TO ADVANCED MICRO DEVICES INC.
© 2014 Advanced Micro Devices
This AMD Board schematic and design is the exclusive property of AMD, and is provided only to entities under a non-disclosure agreement with AMD for evaluation purposes. Further distribution or disclosure is strictly prohibited. Use of this schematic and design for any purpose other than evaluation requires a Board Technology License Agreement with AMD. AMD makes no representations or warranties of any kind regarding this schematic and design, including, not limited to, any implied warranty of merchantability or fitness for a particular purpose, and disclaims responsibility for any consequences resulting from use of the information included herein.

TITLE: Caicos G5 VGA+DP+HDMI 25W ASIC, 5.7"

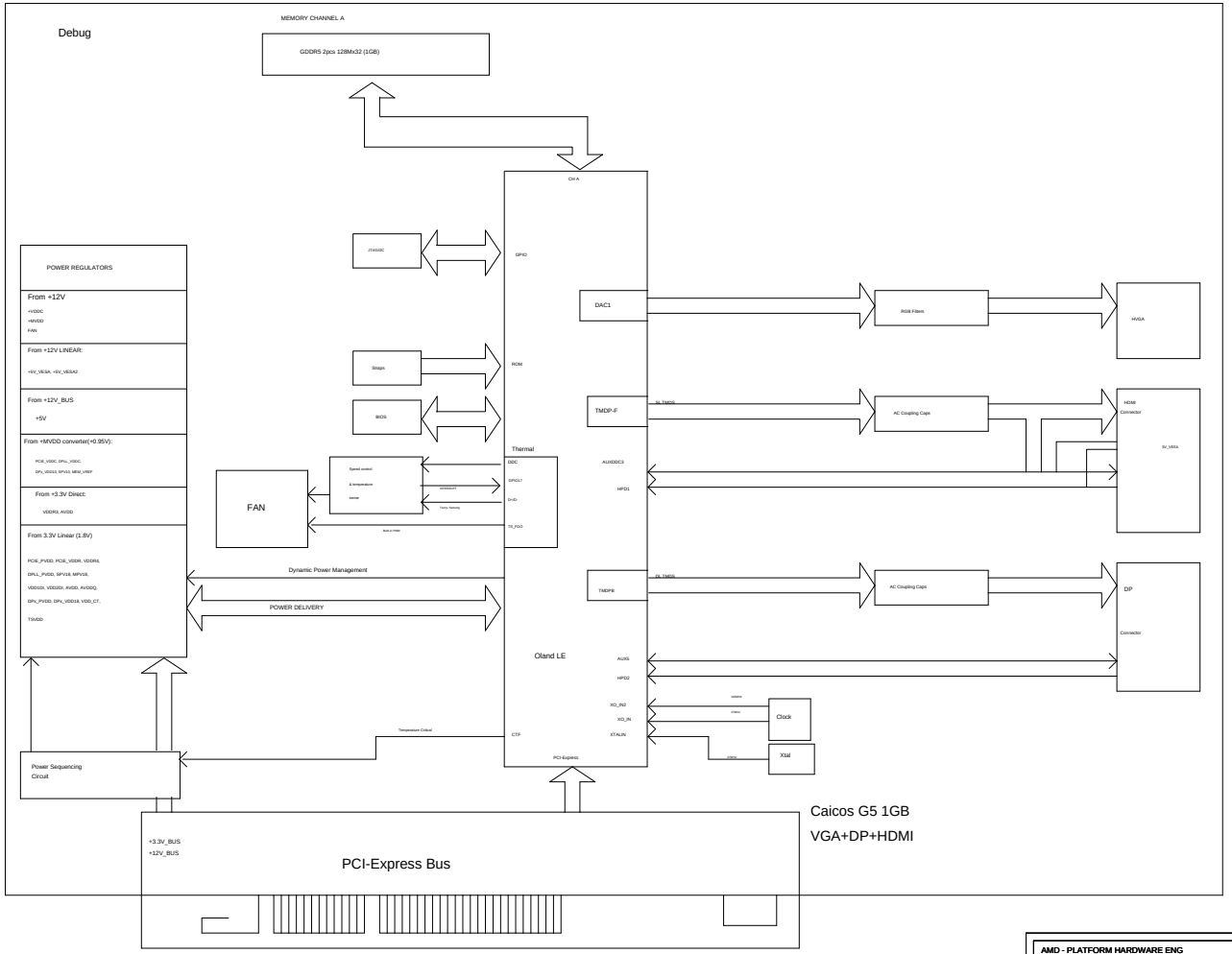

AMD - PLATFORM HARDWARE ENG #48, No.1387, ZHANGDONG ROAD SHANGHAI, CHINA 201203	
SHEET: Diagram	
DATE: Thu May 21 06:47:46 2015	REV: 1.0
SHEET NUMBER: 20 OF 21	
DOCUMENT NUMBER: 105-C982xx-00A	

CONFIDENTIAL AND PROPRIETARY TO ADVANCED MICRO DEVICES INC.
© 2014 Advanced Micro Devices
This AMD Board schematic and design is the exclusive property of AMD, and is provided only to entities under a non-disclosure agreement with AMD for evaluation purposes. Further distribution or disclosure is strictly prohibited. Use of this schematic and design for any purpose other than evaluation requires a Board Technology License Agreement with AMD. AMD makes no representations or warranties of any kind regarding this schematic and design, including, not limited to, any implied warranty of merchantability or fitness for a particular purpose, and disclaims responsibility for any consequences resulting from use of the information included herein.

TITLE: Caicos G5 VGA+DP+HDMI 25W ASIC, 5.7"

AMD

TITLE: Caicos G5 VGA+DP+HDMI 25W ASIC, 5.7"

DOCUMENT NUMBER: 105-C982xx-00A

DATE: Thu May 28 02:44:26 2015

SHEET NUMBER: 21 OF 21

REV: 1.0

REVISION HISTORY

ENGINEER: Tony Yang

NOTES: NOTE

CONFIDENTIAL AND PROPRIETARY TO ADVANCED MICRO DEVICES INC.
© 2014 Advanced Micro Devices
This AMD Board schematic and design is the exclusive property of AMD, and is provided only to entities under a non-disclosure agreement with AMD for evaluation purposes. Further distribution or disclosure is strictly prohibited. Use of this schematic and design for any purpose other than evaluation requires a Board Technology License Agreement with AMD. AMD makes no representations or warranties of any kind regarding this schematic and design, including, not limited to, any implied warranty of merchantability or fitness for a particular purpose, and disclaims responsibility for any consequences resulting from use of the information included herein.

AMD - PLATFORM HARDWARE ENG
#48, No.1387, ZHANGDONG ROAD
SHANGHAI, CHINA 201203

SCH Rev	PCB Rev	Date	REVISION DESCRIPTON
1.00	00A	05/26/15	1. Initial release