(1) PCI-EXPRESS EDGE CONNECTOR

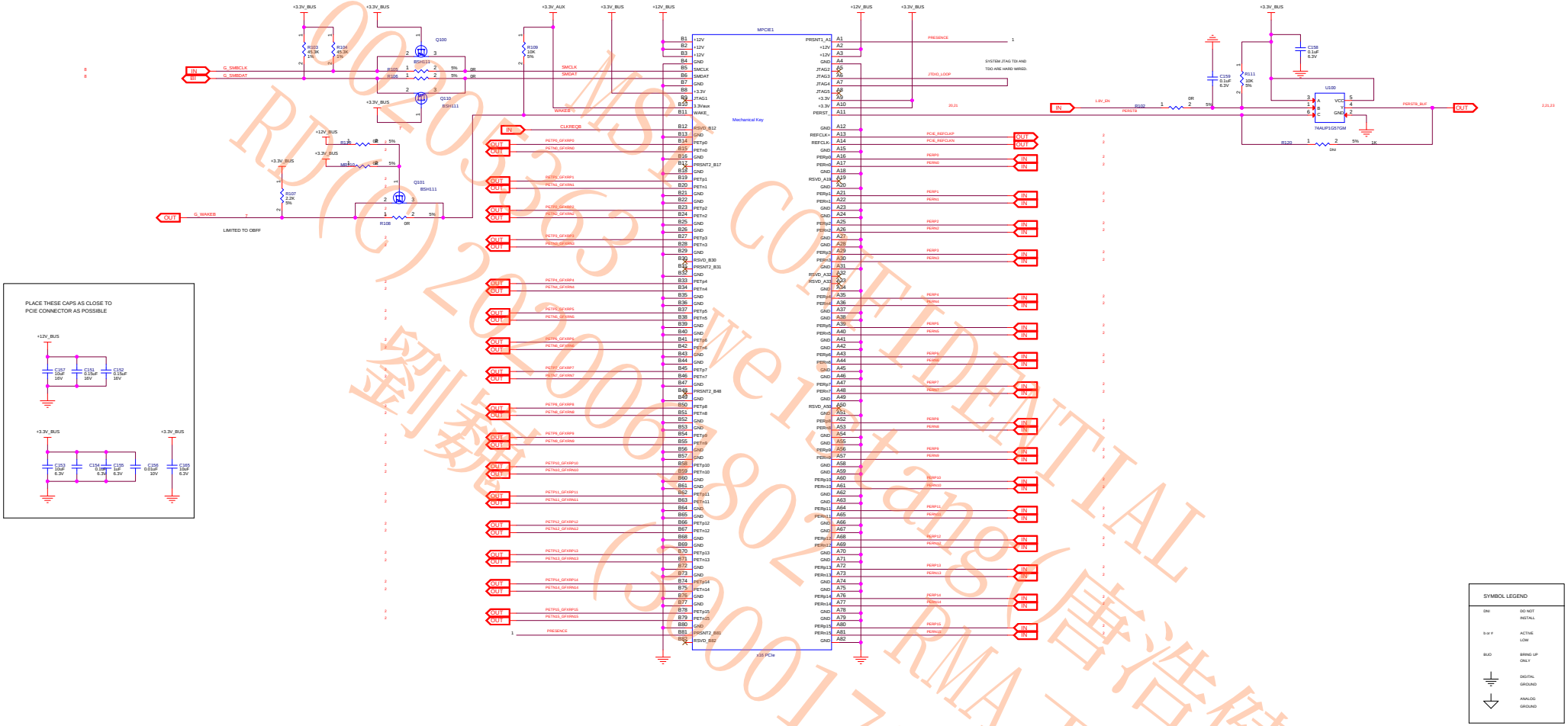

MSI CONFIDENTIAL
(02003203 Wei Yang(唐浩健)
RMA工程課
(3001789)

MICRO-STAR INT'L CO.,LTD		
MS-V341		
Size: Custom	Document Description: TABLE OF CONTENTS	Rev: 1.0
Date: Wednesday, May 04, 2016	Sheet 1 of 26	

(2) ELLESMERE PCIE INTERFACE

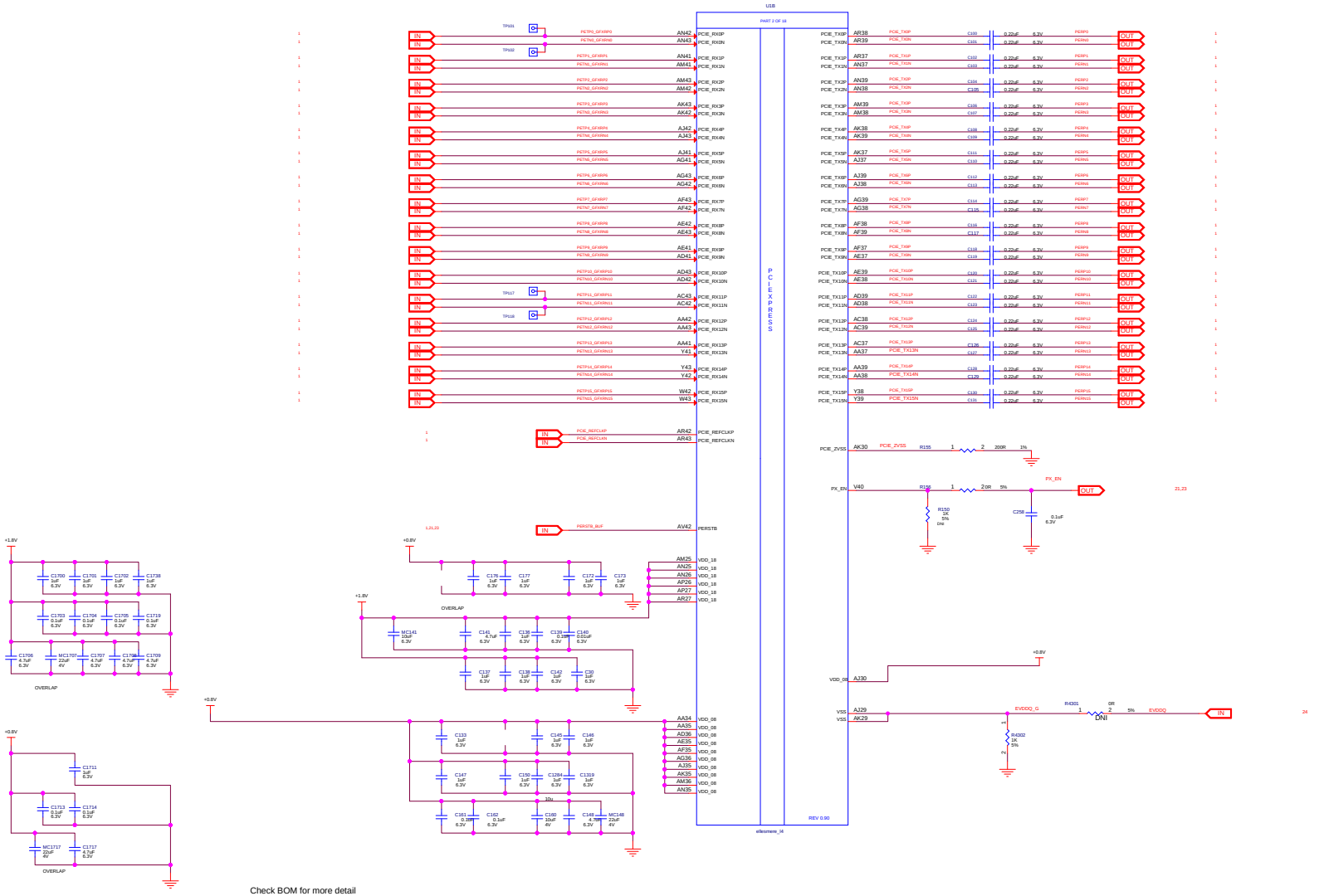

Check BOM for more detail

MICRO-STAR INT'L CO.,LTD		
MS-V341		
Size: Custom	Document Description: TABLE OF CONTENTS	Rev: 1.0
Date: Wednesday, May 04, 2016	Sheet 2 of 26	

(3) ELLESMERE MEM INTERFACE CH A/B

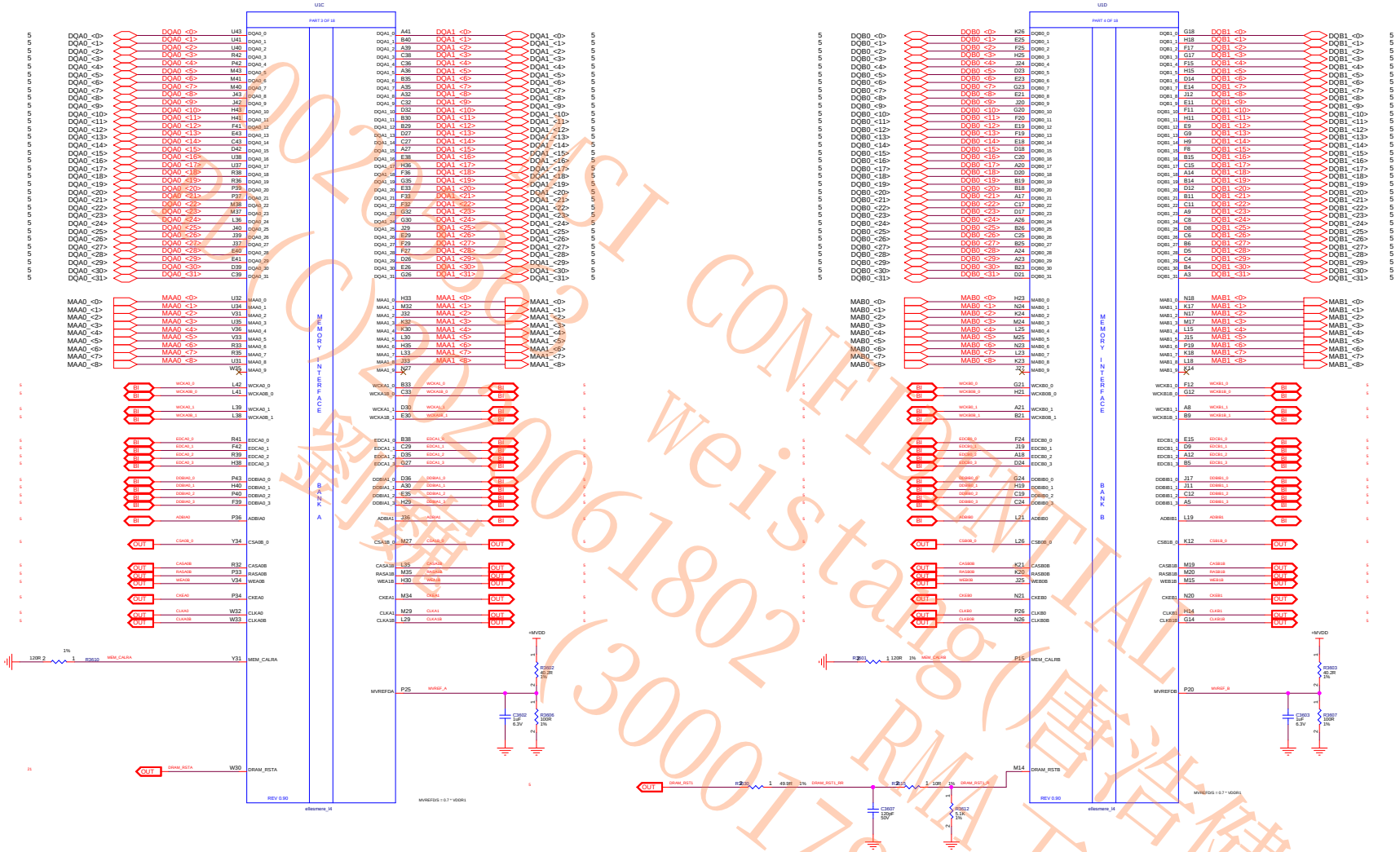

2020 MSI CONFIDENTIAL
Weistang(唐浩健)
RMI工程課
(30001789)
(2020/06/18)

MICRO-STAR INT'L CO.,LTD		
MS-V341		
Size: Custom	Document Description: TABLE OF CONTENTS	Rev: 1.0
Date: Wednesday, May 04, 2016	Sheet 3 of 26	

(4) ELLESMERE MEM INTERFACE CH C/D

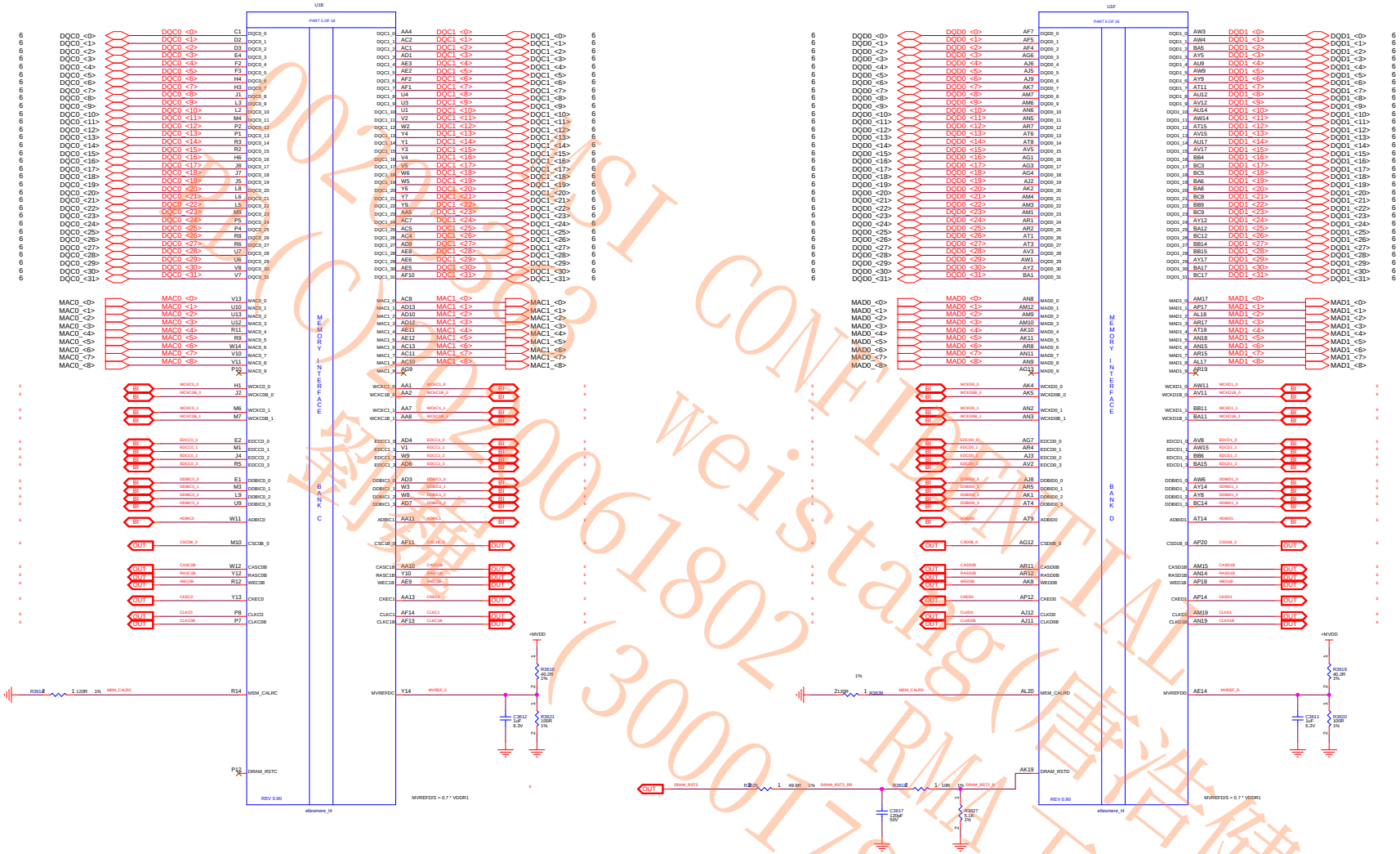

CONFIDENTIAL
weistang(偉詳健)
RM工程課
(30001789)
2010/03/30
2006/18/02

MICRO-STAR INT'L CO.,LTD		
MS-V341		
Size: Custom	Document Description: TABLE OF CONTENTS	Rev: 1.0
Date: Wednesday, May 04, 2016	Sheet 4 of 26	

(5) GDDR5 MEMORY CH A/B

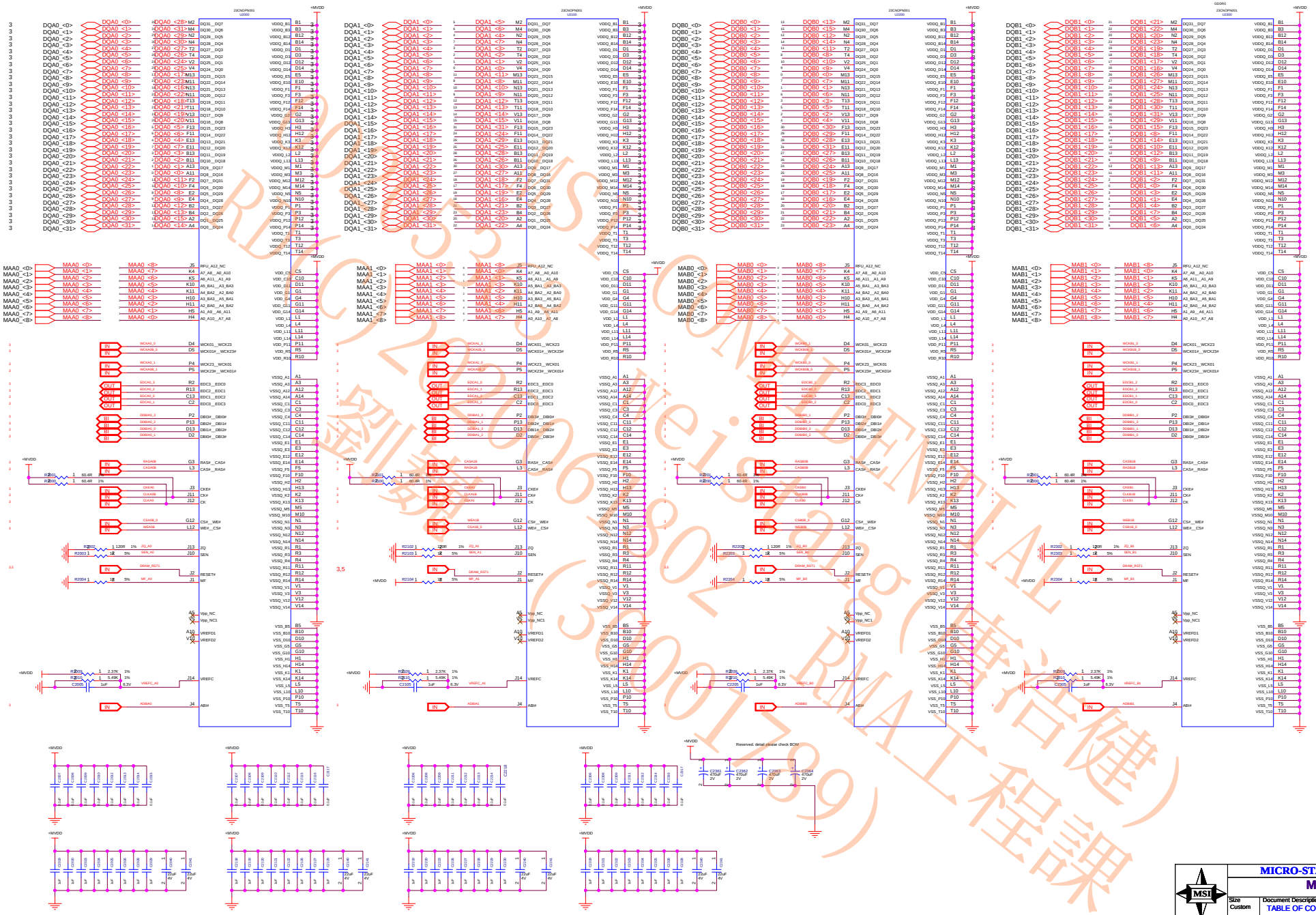

MICRO-STAR INT'L CO.,LTD		
MS-V341		
Size: Custom	Document Description: TABLE OF CONTENTS	Rev: 1.0
Date: Wednesday, May 04, 2016	Sheet 5 of 26	

(6) GDDR5 MEMORY CH C/D

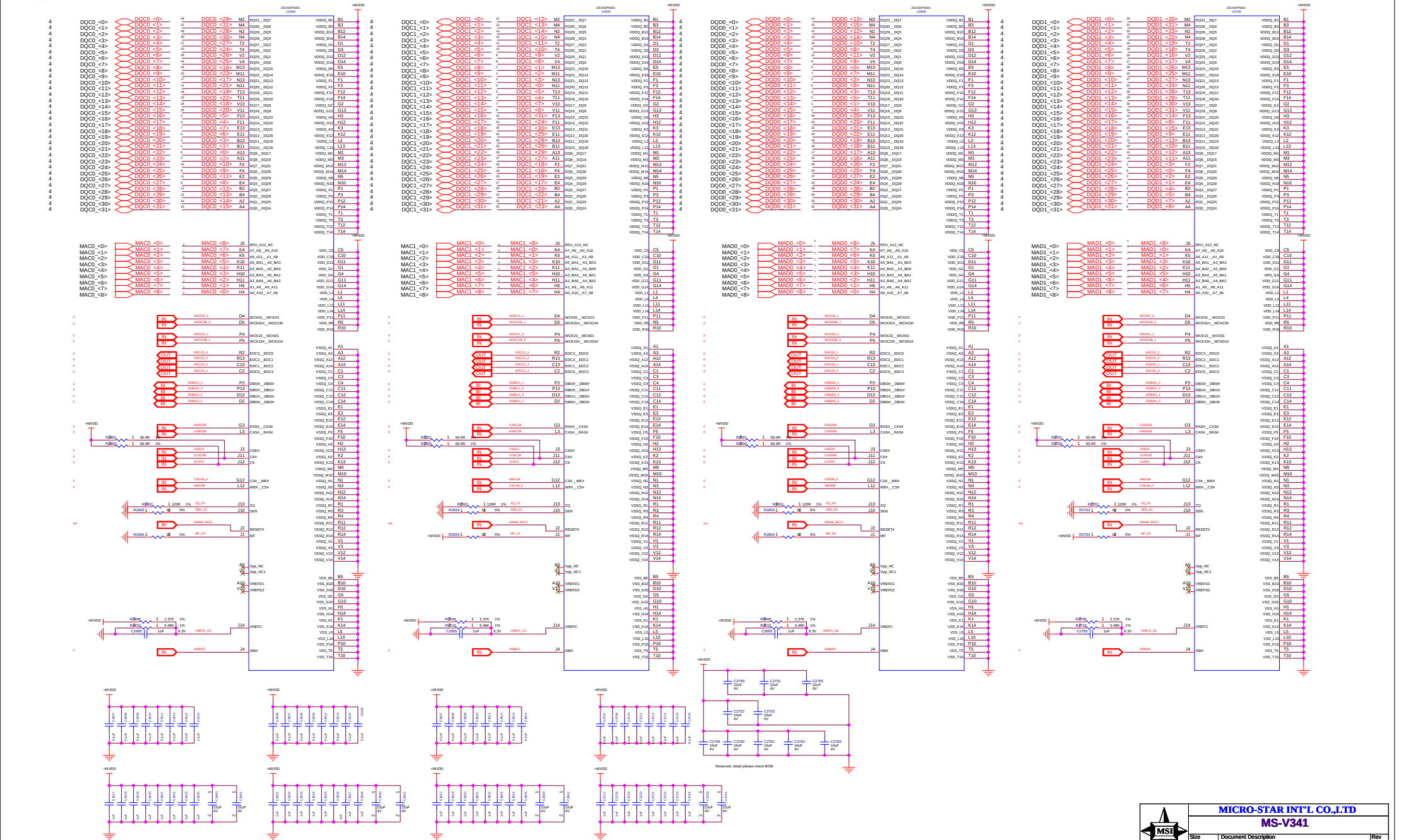

MICRO-STAR INT'L CO.,LTD			
MS-V341			
Size: Custom	Document Description: TABLE OF CONTENTS		Rev: 1.0
Date: Wednesday, May 04, 2016	Sheet 6 of 26		

(7) ELLESMERE GPIO STRAP CF XTAL

SCLSDA BUS:

I2C ADDRESS	FUNCTION	DEVICE

DDCVGA BUS:

I2C ADDRESS	FUNCTION	DEVICE
0x98	EXT TEMP SENSOR	LM96063

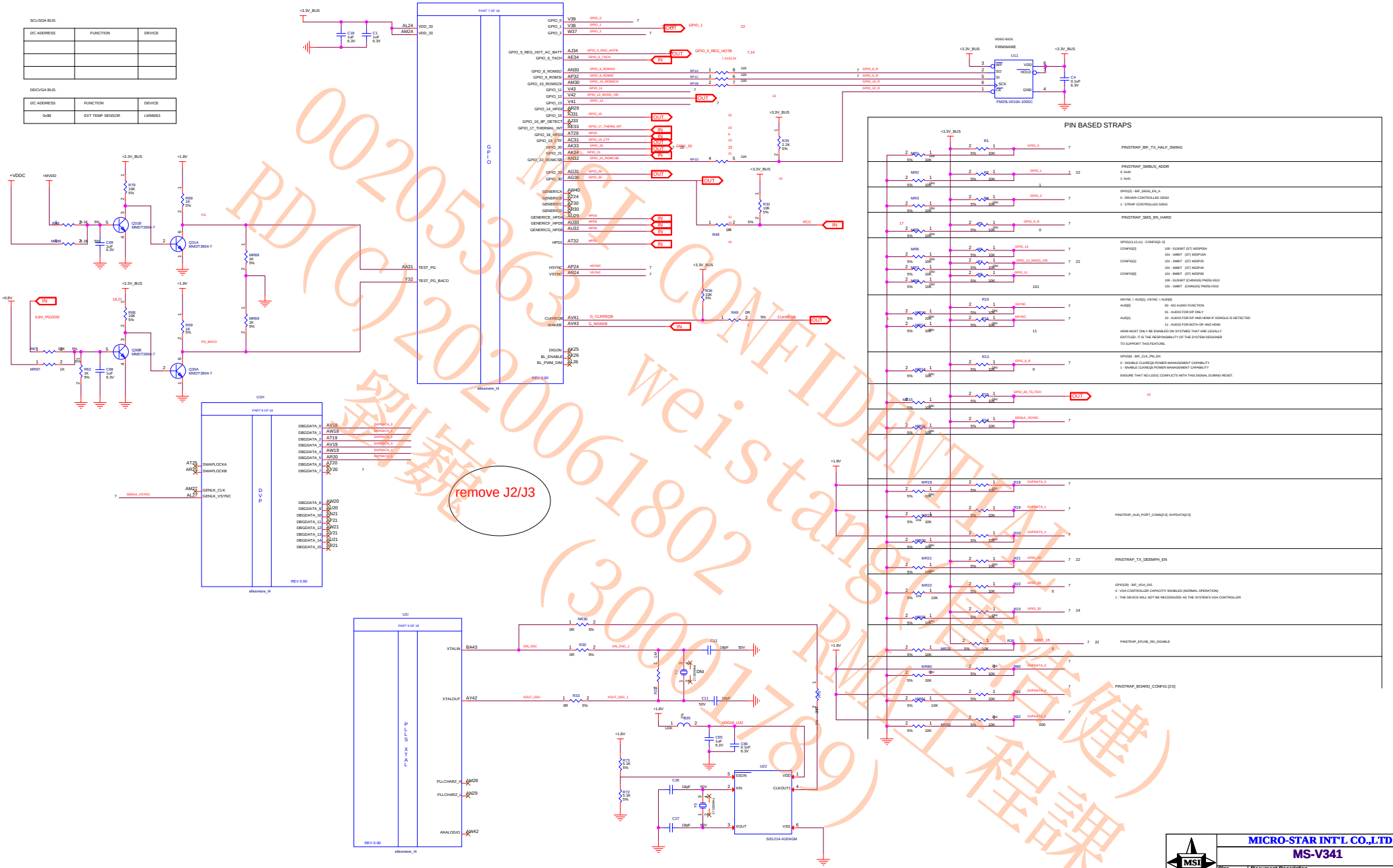

00205363 MSI CONFIDENTIAL
RD(C)20200061802 weistang(魏宣健)
(300017789) RMAL 程課

MICRO-STAR INT'L CO.,LTD		
MS-V341		
Size: Custom	Document Description: TABLE OF CONTENTS	Rev: 1.0
Date: Wednesday, May 04, 2016	Sheet 7 of 26	

(8) ELLESMERE DAC1 LOCK

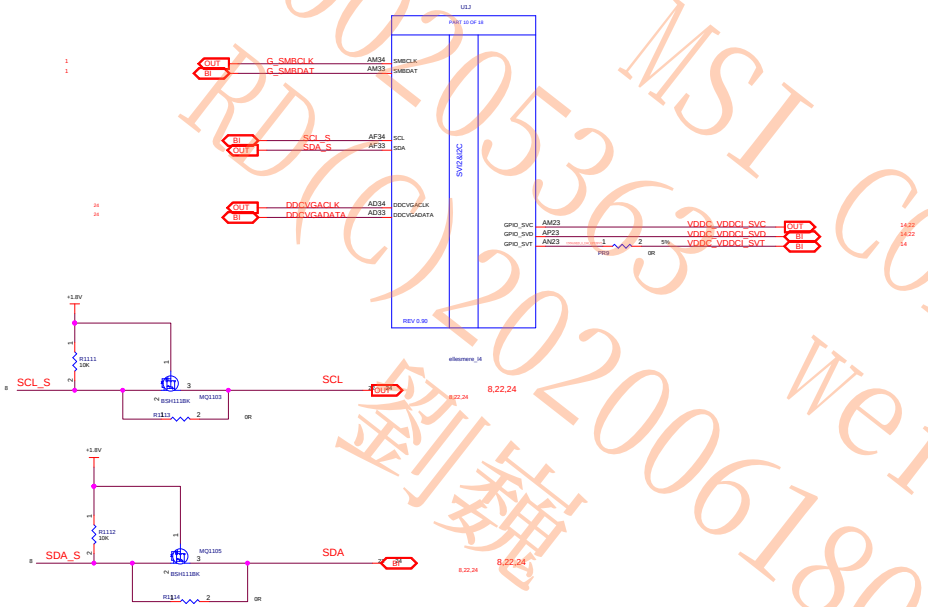

MSI CONFIDENTIAL
00205363
weistang(唐浩健)
RD(C)20200061802
RMA工程課
劉耕
(30001789)

MICRO-STAR INT'L CO.,LTD		
MS-V341		
Size: Custom	Document Description: TABLE OF CONTENTS	Rev: 1.0
Date: Wednesday, May 04, 2016	Sheet 8 of 26	

(9) ELLESMERE TMDP A/B

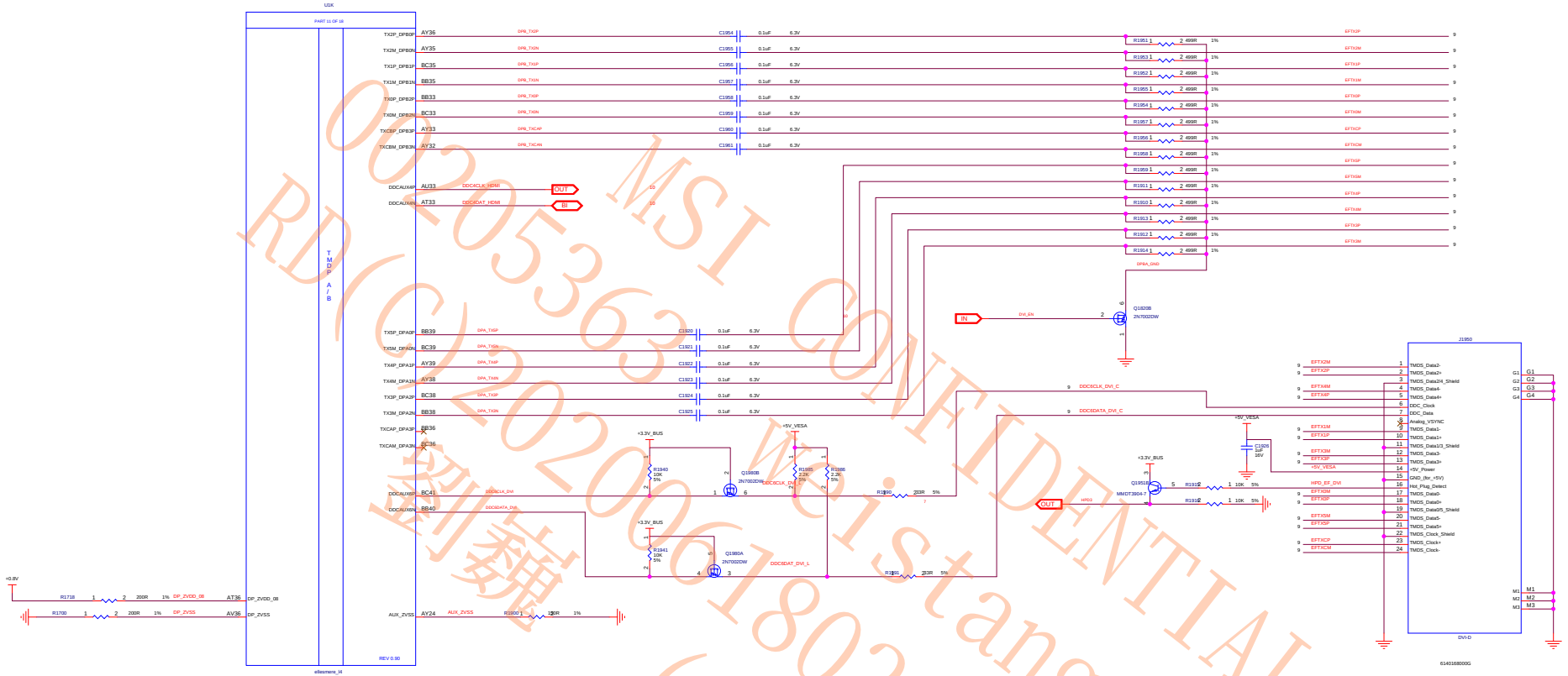

OPTIONAL ESD PROTECTION DIODES

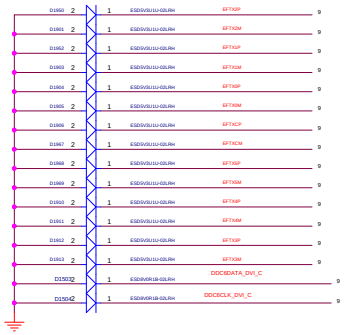

MSI CONFIDENTIAL
002053631 RD(C)20200601802 Wei Stang(唐浩健)
(30001789) RMA工程課

MICRO-STAR INT'L CO.,LTD			
MS-V341			
Size: Custom	Document Description: TABLE OF CONTENTS		Rev: 1.0
Date: Wednesday, May 04, 2016	Sheet 9 of 26		

(10) ELLESMERE TMDP C/D

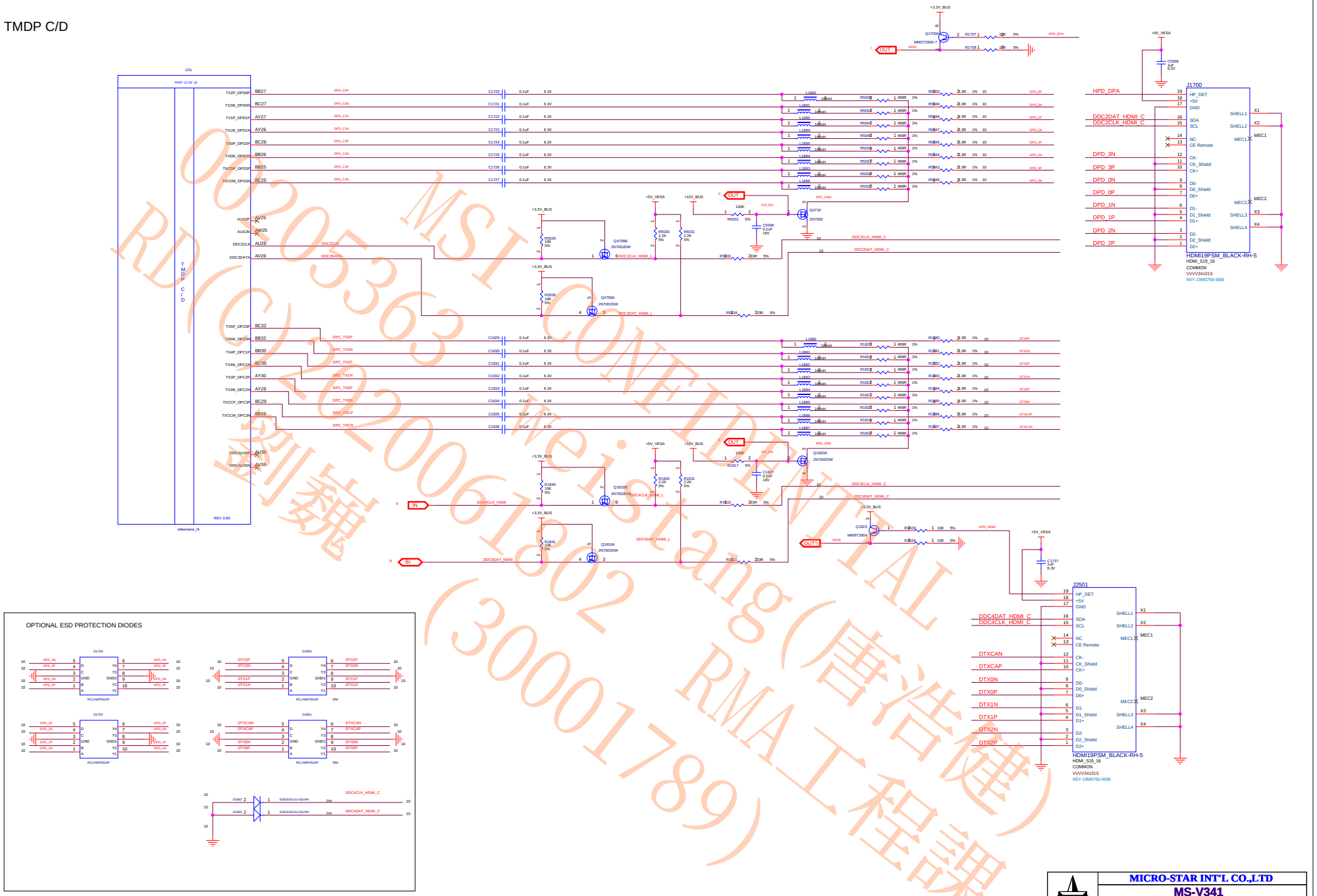

MSI CONFIDENTIAL
00205363 Weistang(唐浩健)
RD(C)20200618002 RMA工程課
剛魏 (30001789)

MICRO-STAR INT'L CO.,LTD		
MS-V341		
Size: Custom	Document Description: TABLE OF CONTENTS	Rev: 1.0
Date: Wednesday, May 04, 2016	Sheet 10 of 26	

(11) ELLESMERE LVTMDP E/F

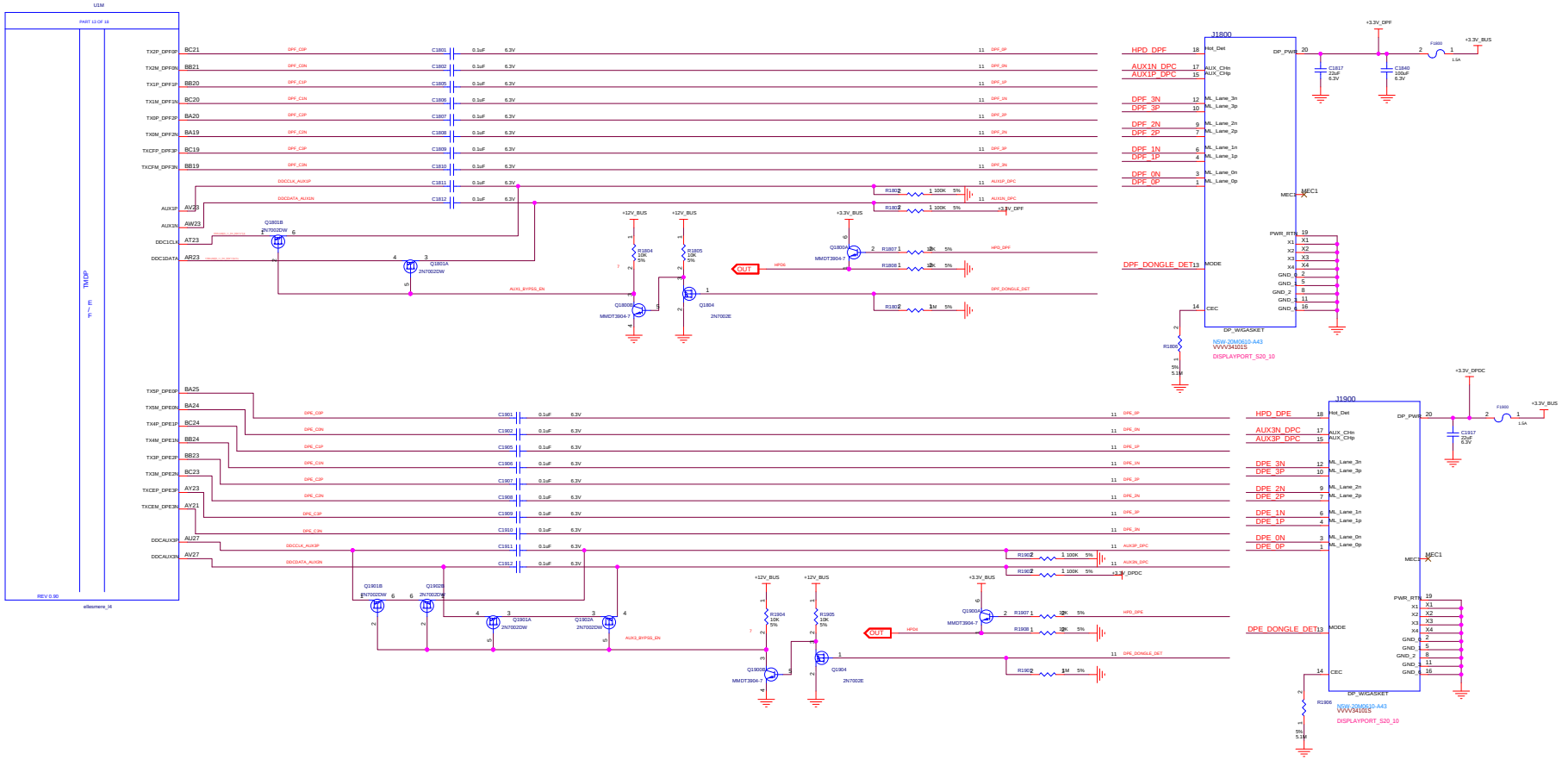

OPTIONAL ESD PROTECTION DIODES

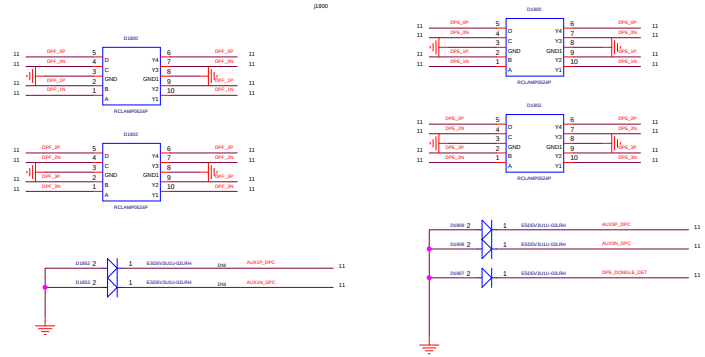

MICRO-STAR INT'L CO.,LTD		
MS-V341		
Size: Custom	Document Description: TABLE OF CONTENTS	Rev: 1.0
Date: Wednesday, May 04, 2016	Sheet 11 of 26	

(12) ELLESMERE POWER

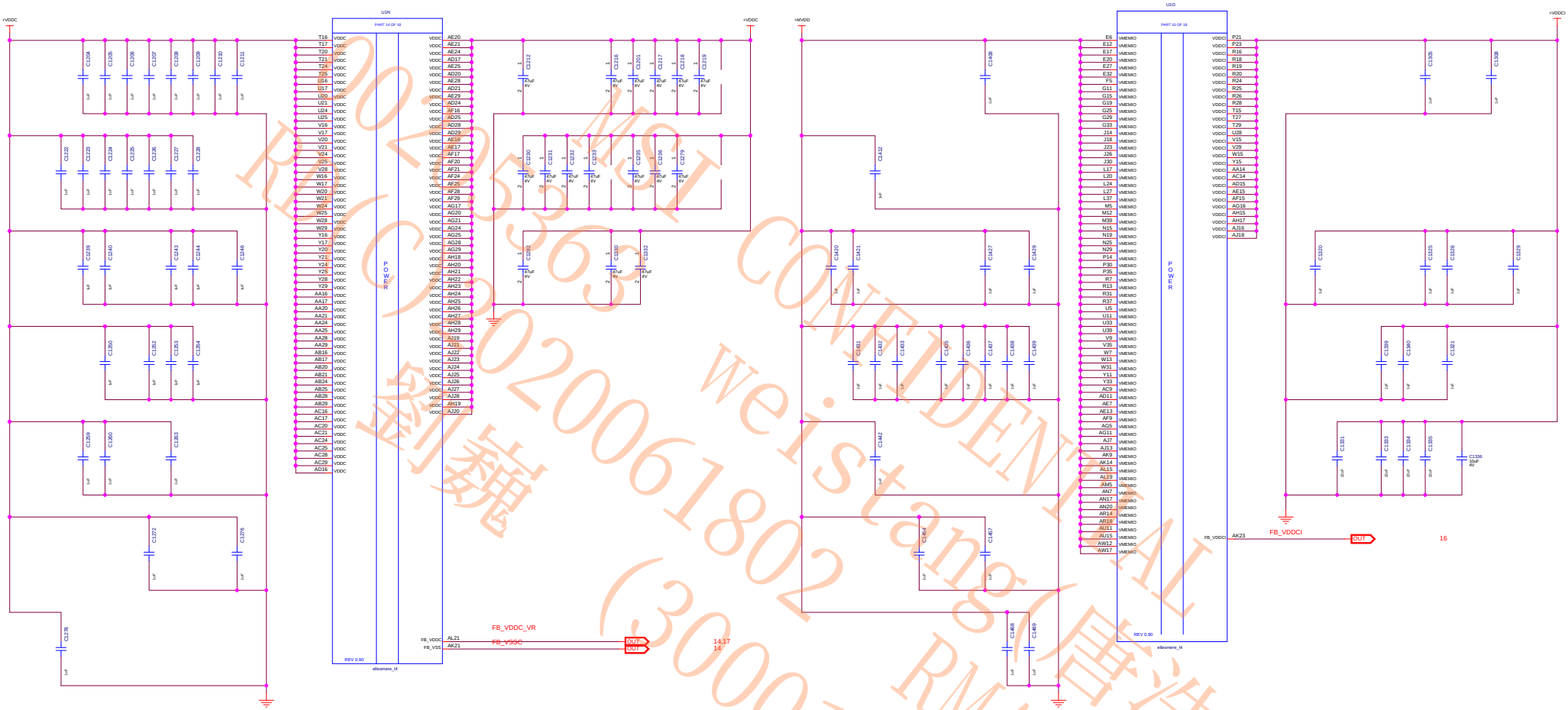

MSI CONFIDENTIAL
weistang(唐浩健)
RMA工程課
(30001789)
2016-05-03
PM(C)20200618021
劉巍

MICRO-STAR INT'L CO.,LTD		
MS-V341		
Size: Custom	Document Description: TABLE OF CONTENTS	Rev: 1.0
Date: Wednesday, May 04, 2016	Sheet 12 of 26	

(13) ELLESMERE GROUND

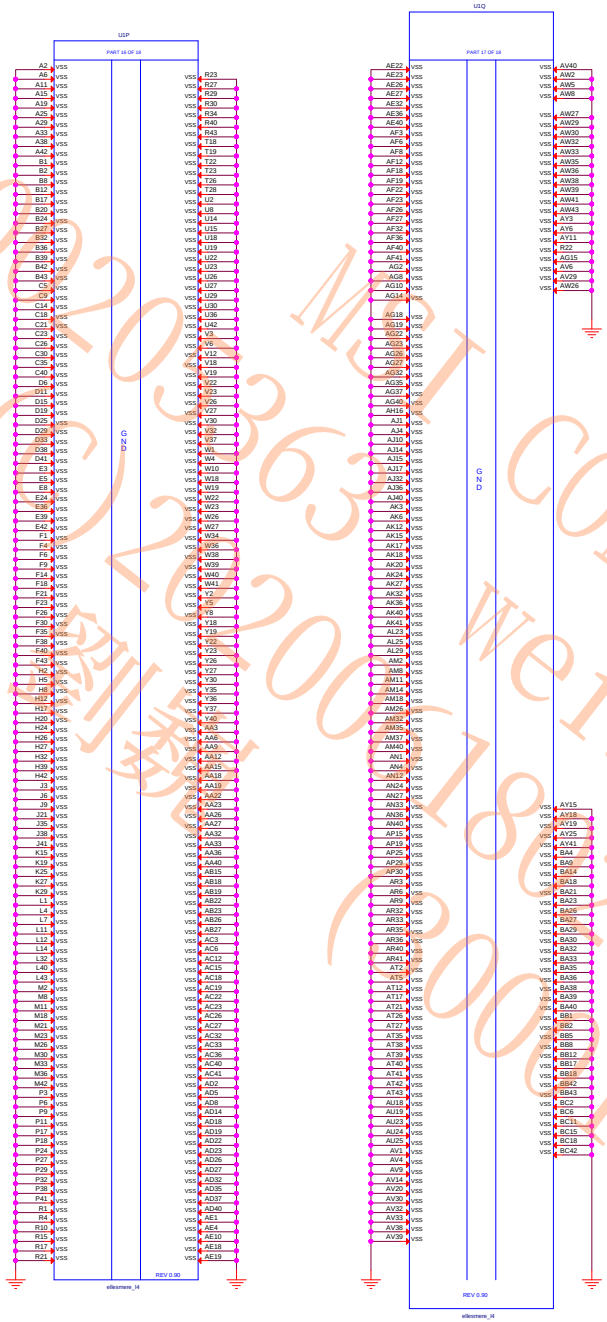

MSI CONFIDENTIAL
weistang(唐浩健)
RDC(02)2003(1812)
(2006/1789)
RMA工程課

MICRO-STAR INT'L CO.,LTD		
MS-V341		
Size: Custom	Document Description: TABLE OF CONTENTS	Rev: 1.0
Date: Wednesday, May 04, 2016	Sheet 13 of 26	

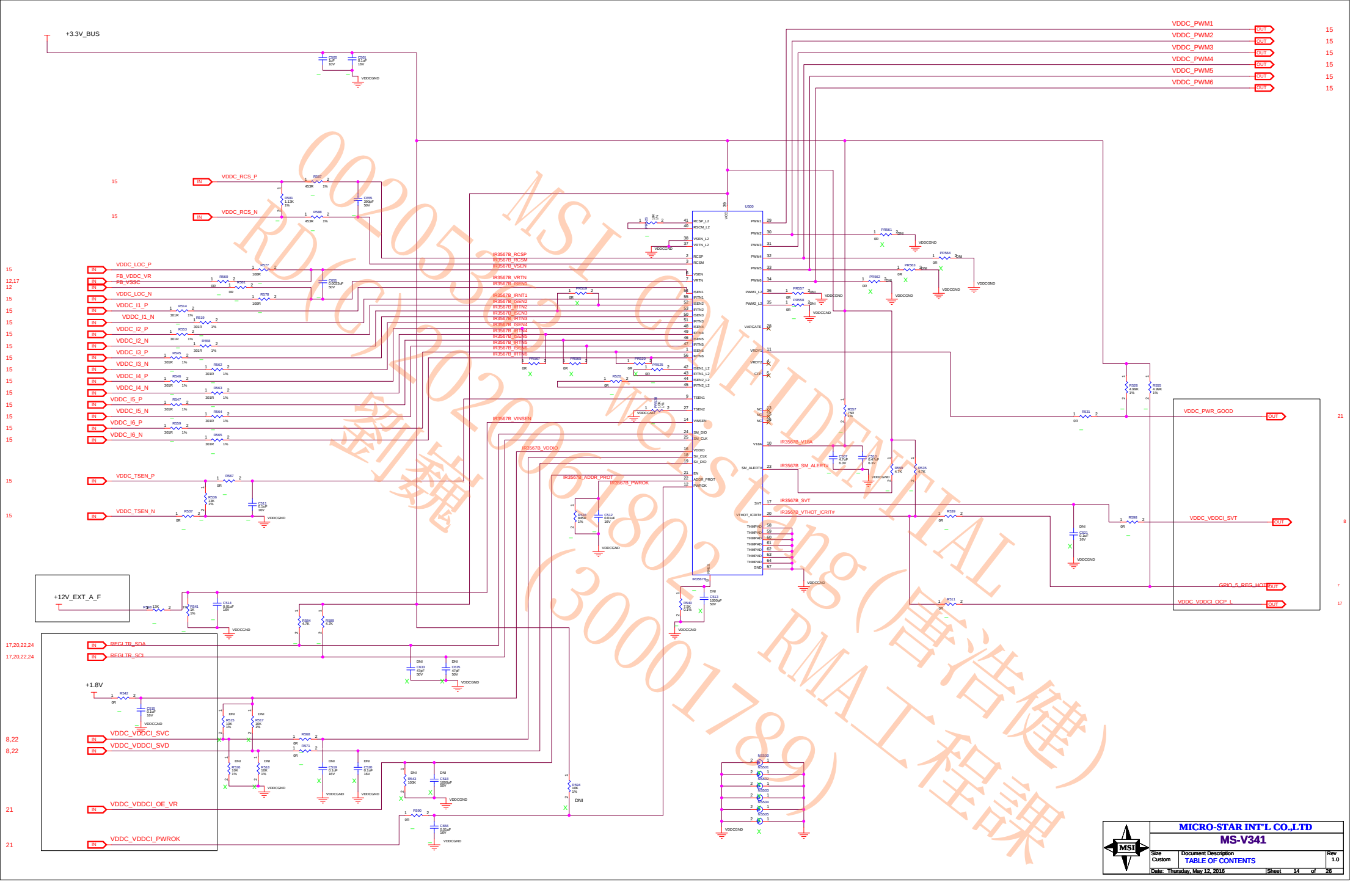

0005268
RD(2020618025)
MSI CONFIDENTIAL
Wei Sing(韋浩健)
(300017889)
RMA工程課
劉耀

MICRO-STAR INT'L CO.,LTD	
MS-V341	
Size: Custom	Document Description: TABLE OF CONTENTS
Rev: 1.0	
Date: Thursday, May 12, 2016	Sheet 14 of 26

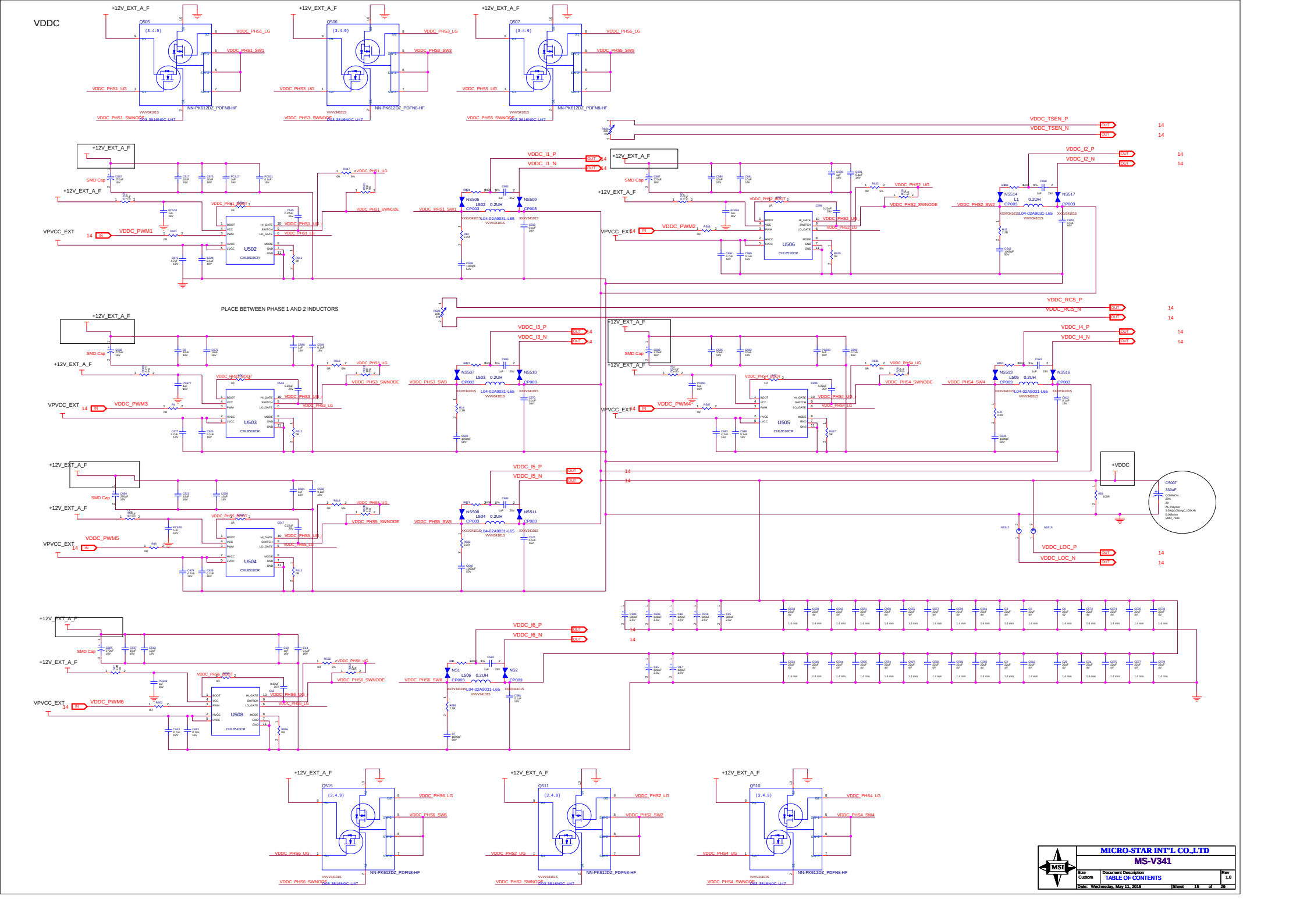
VDDC
PLACE BETWEEN PHASE 1 AND 2 INDUCTORS
VDDC_PHS1_LG
VDDC_PHS1_SW1
VDDC_PHS1_UG
VDDC_PHS1_SWNODE
VDDC_PHS3_LG
VDDC_PHS3_SW3
VDDC_PHS3_UG
VDDC_PHS3_SWNODE
VDDC_PHS5_LG
VDDC_PHS5_SW5
VDDC_PHS5_UG
VDDC_PHS5_SWNODE
VDDC_PHS6_LG
VDDC_PHS6_SW6
VDDC_PHS6_UG
VDDC_PHS6_SWNODE
VDDC_PHS2_LG
VDDC_PHS2_SW2
VDDC_PHS2_UG
VDDC_PHS2_SWNODE
VDDC_PHS4_LG
VDDC_PHS4_SW4
VDDC_PHS4_UG
VDDC_PHS4_SWNODE
VDDC_PWM1
VDDC_PWM2
VDDC_PWM3
VDDC_PWM4
VDDC_PWM5
VDDC_PWM6
VPVCC_EXT
+12V_EXT_A_F
SMD Cap
U502
U503
U504
U505
U506
U508
CHL8510CR
NN-PK612DZ_PDFN8-HF
VDDC_TSEN_P
VDDC_TSEN_N
VDDC_I1_P
VDDC_I1_N
VDDC_I2_P
VDDC_I2_N
VDDC_I3_P
VDDC_I3_N
VDDC_I4_P
VDDC_I4_N
VDDC_I5_P
VDDC_I5_N
VDDC_I6_P
VDDC_I6_N
VDDC_RCS_P
VDDC_RCS_N
VDDC_LOC_P
VDDC_LOC_N
+VDDC
MICRO-STAR INT'L CO.,LTD
MS-V341
TABLE OF CONTENTS
Rev 1.0
Wednesday, May 11, 2016
Sheet 15 of 26

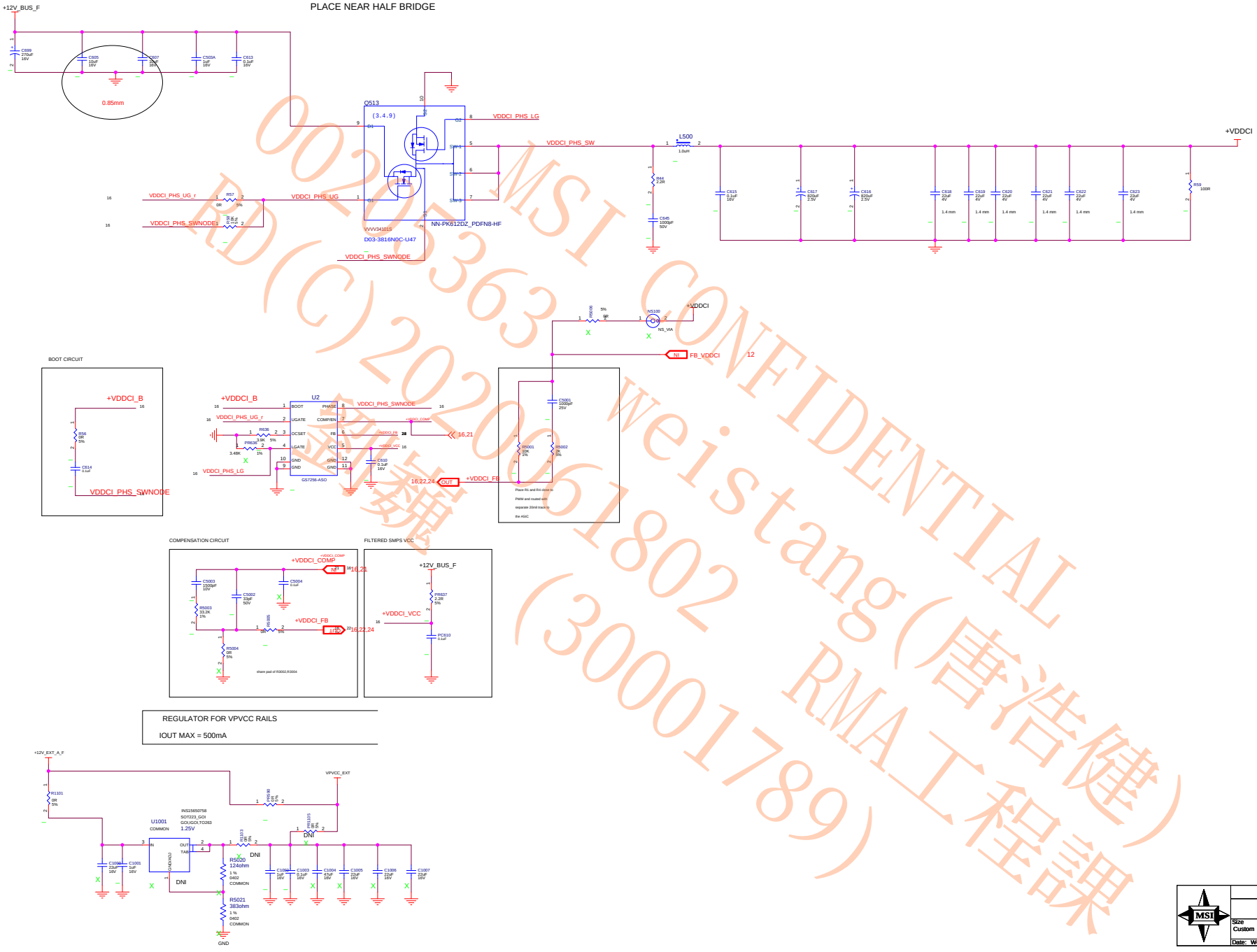

MSI CONFIDENTIAL
002053631 weistang(唐浩健)
RD(C)20201618021 RMA工程課
(30001789)

MICRO-STAR INT'L CO.,LTD		
MS-V341		
Size: Custom	Document Description: TABLE OF CONTENTS	Rev: 1.0
Date: Wednesday, May 04, 2016	Sheet 16 of 26	

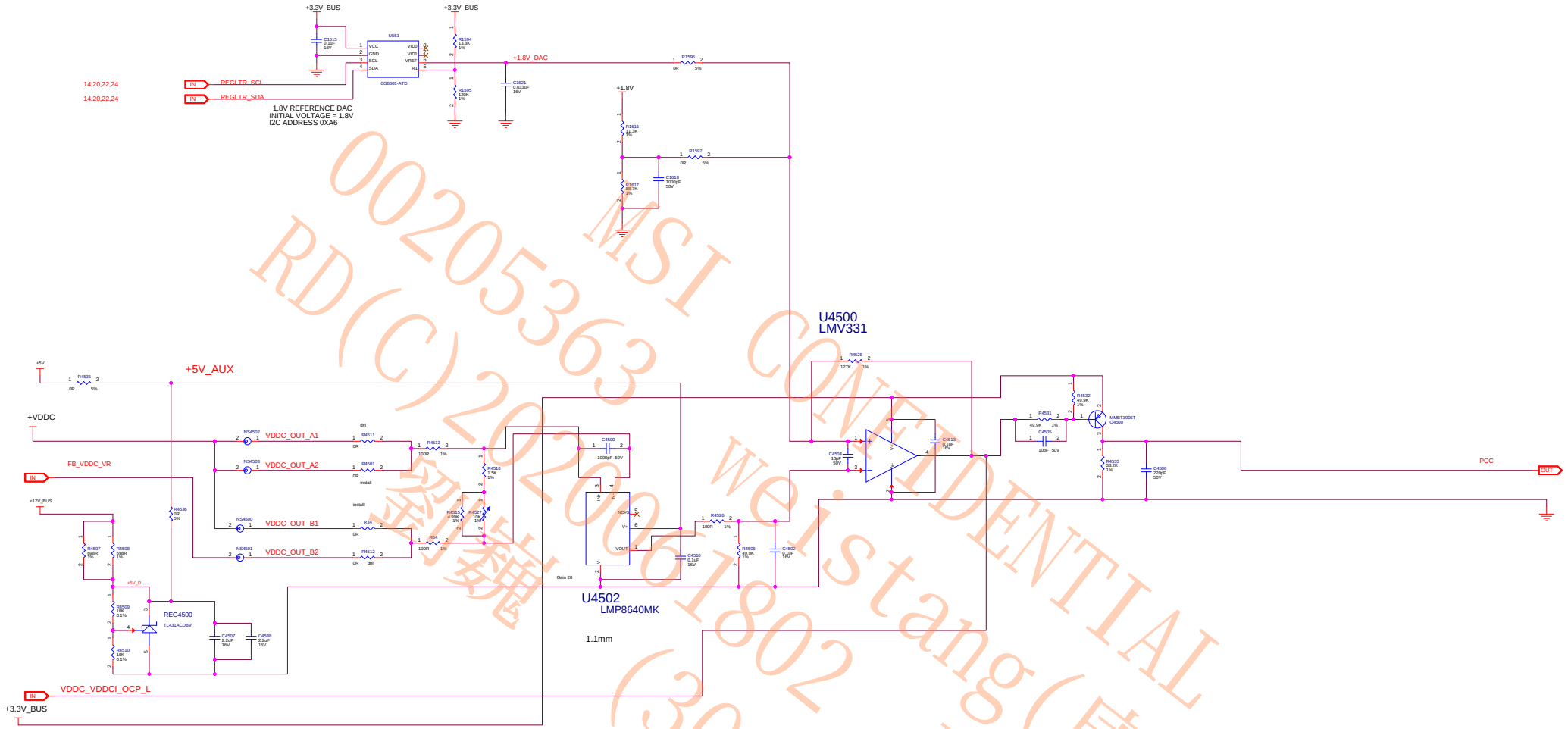

MSI CONFIDENTIAL
weistang(唐浩健)
RMA工程課
(30001789)
00205363
RD(C)20200061802
劉龍

MICRO-STAR INT'L CO.,LTD		
MS-V341		
Size: Custom	Document Description: TABLE OF CONTENTS	Rev: 1.0
Date: Monday, May 09, 2016	Sheet 17 of 26	

(16) MVDD

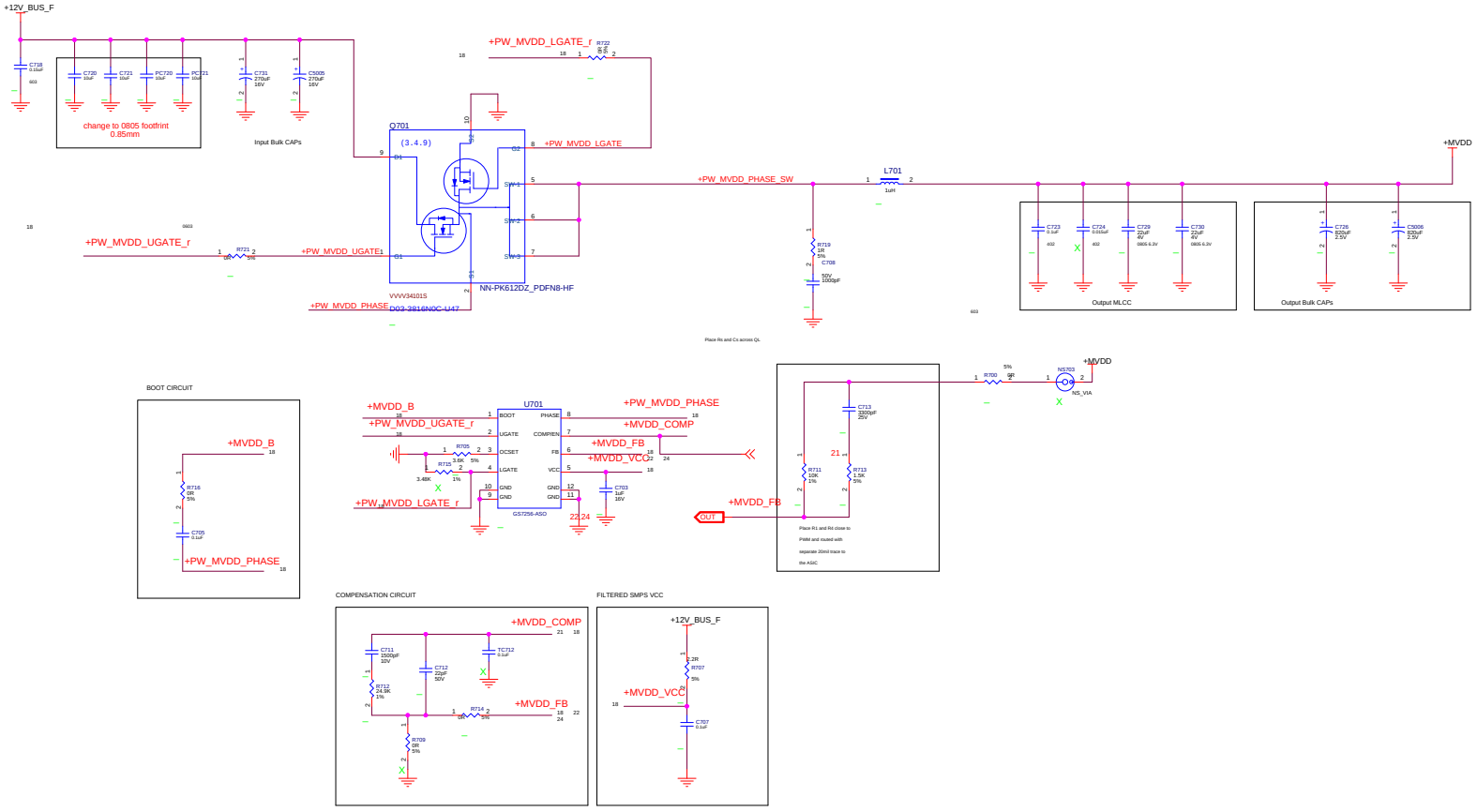

MICRO-STAR INT'L CO.,LTD		
MS-V341		
Size: Custom	Document Description: TABLE OF CONTENTS	Rev: 1.0
Date: Wednesday, May 04, 2016	Sheet 18 of 26	

(17) 0.95V

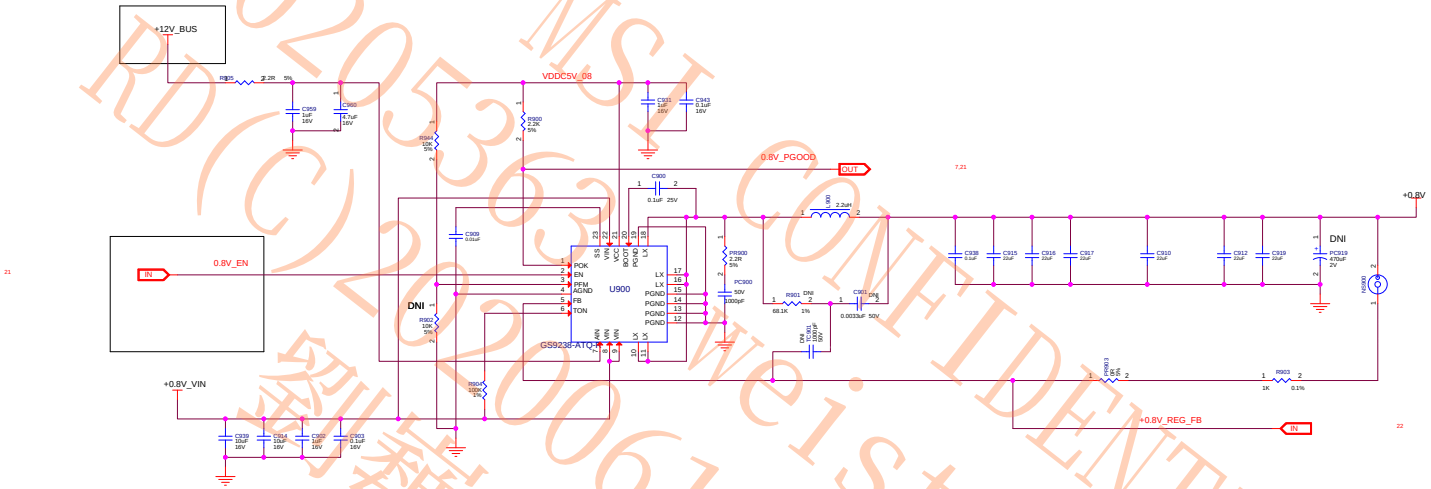

MSI CONFIDENTIAL
002053631 weistang(唐浩健)
RD(C)20200061802 RMA工程課
劉魏 (30001789)

MICRO-STAR INT'L CO.,LTD		
MS-V341		
Size: Custom	Document Description: TABLE OF CONTENTS	Rev: 1.0
Date: Wednesday, May 04, 2016	Sheet 19 of 26	

(18) SMALL RAIL REGULATORS , LED_CONTROLLER_ENE3574

LDO #1: VIN = 3.0V TO 3.6V MAX VOUT = +1.8V +/- 2% IOUT = 1.3A RMS MAX

PCB: 50 TO 70mm SQ. COPPER AREA FOR COOLING

REGULATOR FOR +5V RAILS

IOUT MAX = 150mA

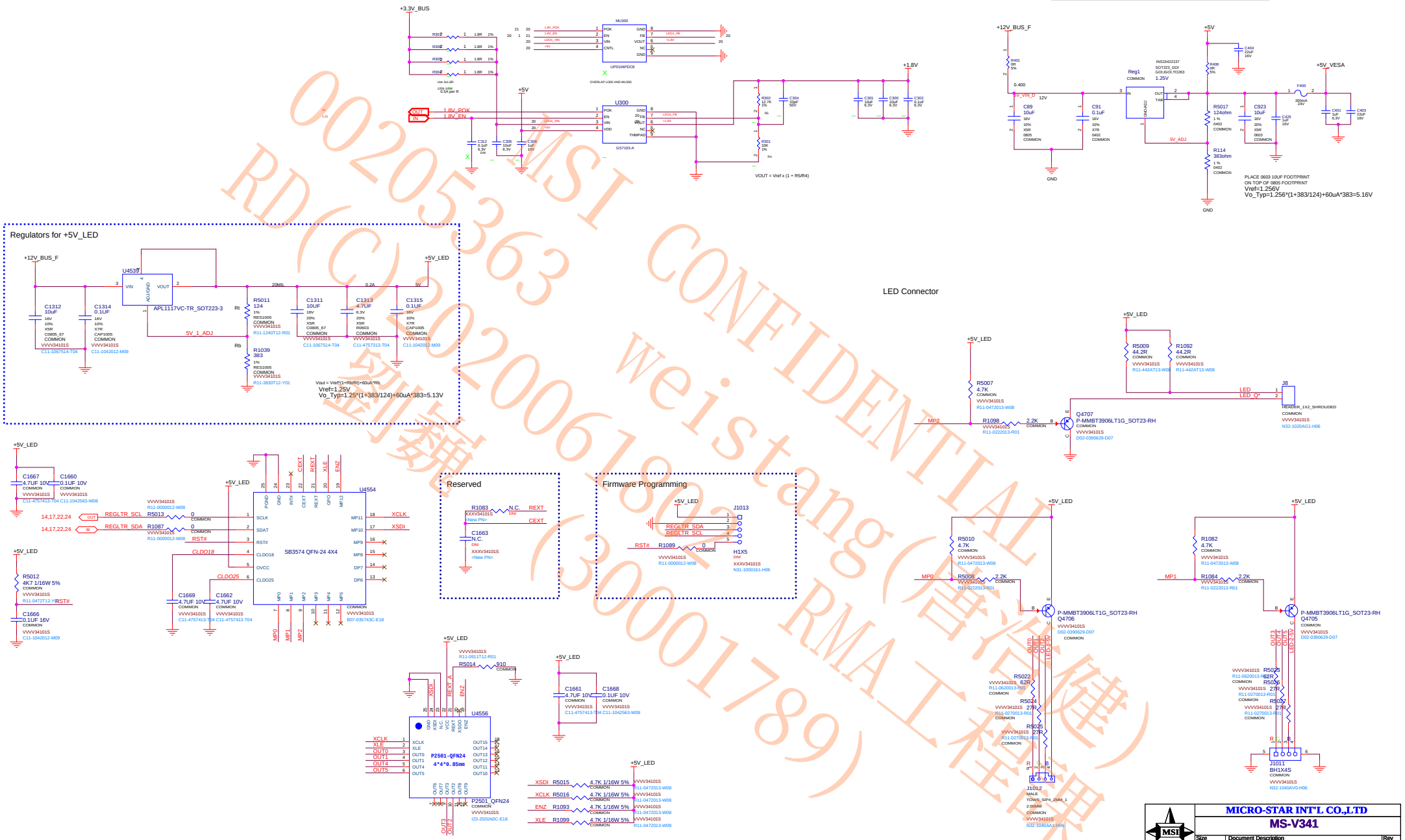

MSI CONFIDENTIAL
weistang(唐文健)
RMA工程課
(30001789)
00205363
RD(C)20200618021

MICRO-STAR INT'L CO.,LTD		
MS-V341		
Size: Custom	Document Description: TABLE OF CONTENTS	Rev: 1.0
Date: Wednesday, May 04, 2016	Sheet 20 of 26	

(19) POWER MANAGEMENT

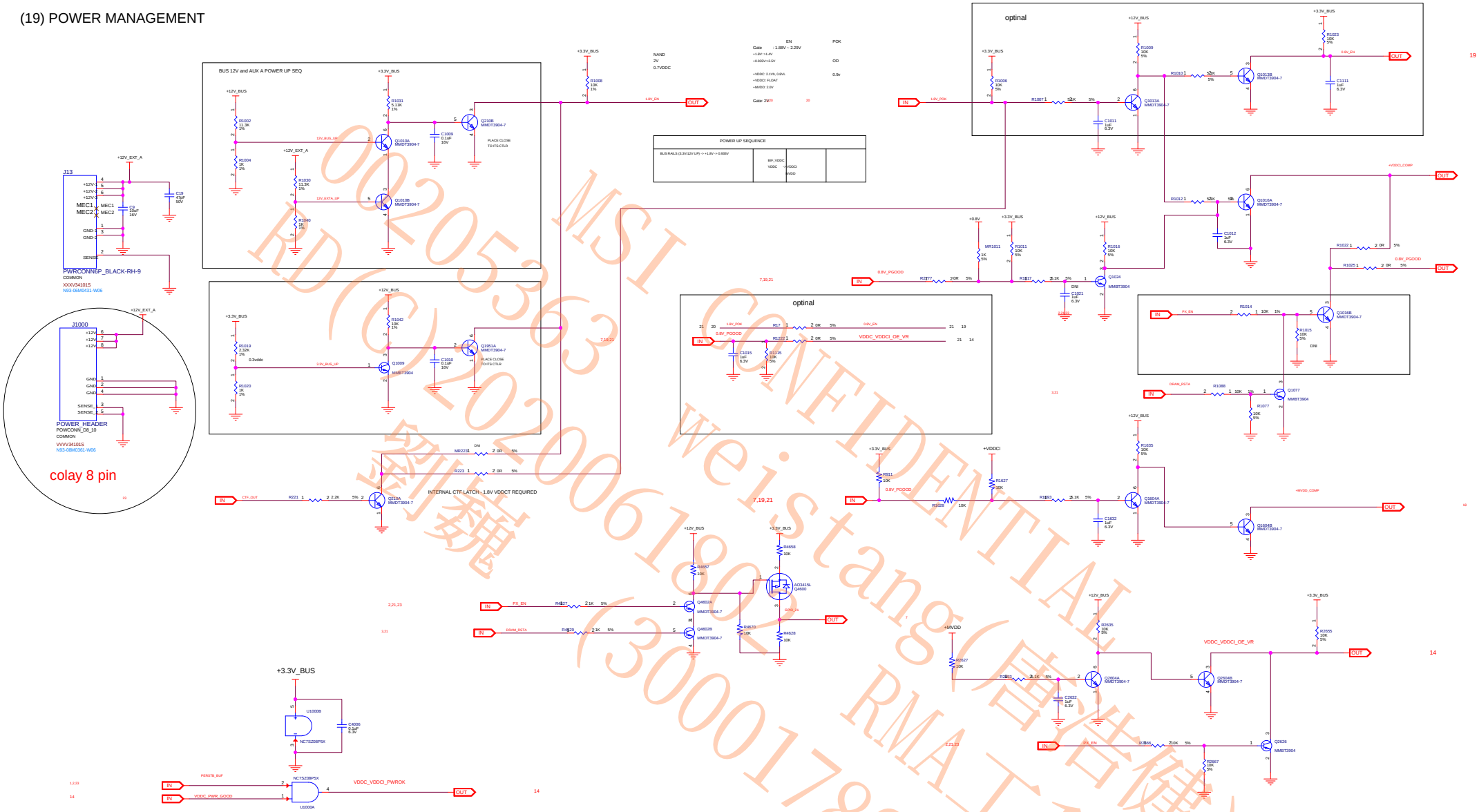

MSI CONFIDENTIAL
002053363
RD(C)(02006180)
weistang(唐浩健)
RMA工程課
劉鑫 (30001789)

MICRO-STAR INT'L CO.,LTD			
MS-V341			
Size: Custom	Document Description: TABLE OF CONTENTS		Rev: 1.0
Date: Wednesday, May 04, 2016		Sheet 21 of 26	

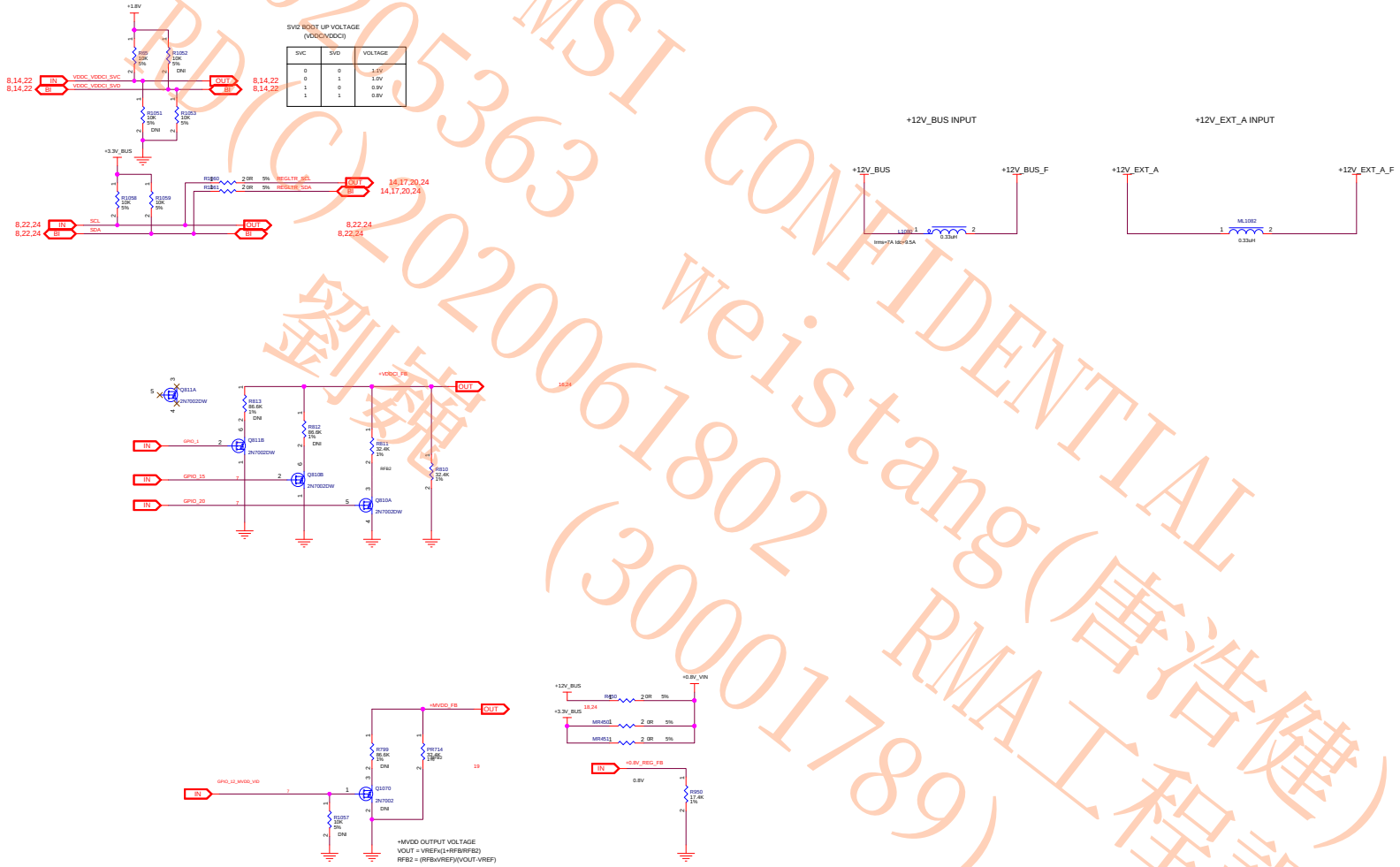

MSI CONFIDENTIAL
weistang(唐浩健)
RMA工程課
00205363
PR(C)20200618 02
劉耀
(30001789)

MICRO-STAR INT'L CO.,LTD		
MS-V341		
Size: Custom	Document Description: TABLE OF CONTENTS	Rev: 1.0
Date: Wednesday, May 04, 2016	Sheet 22 of 26	

(20) MECHANICAL AND THERMAL MANAGEMENT

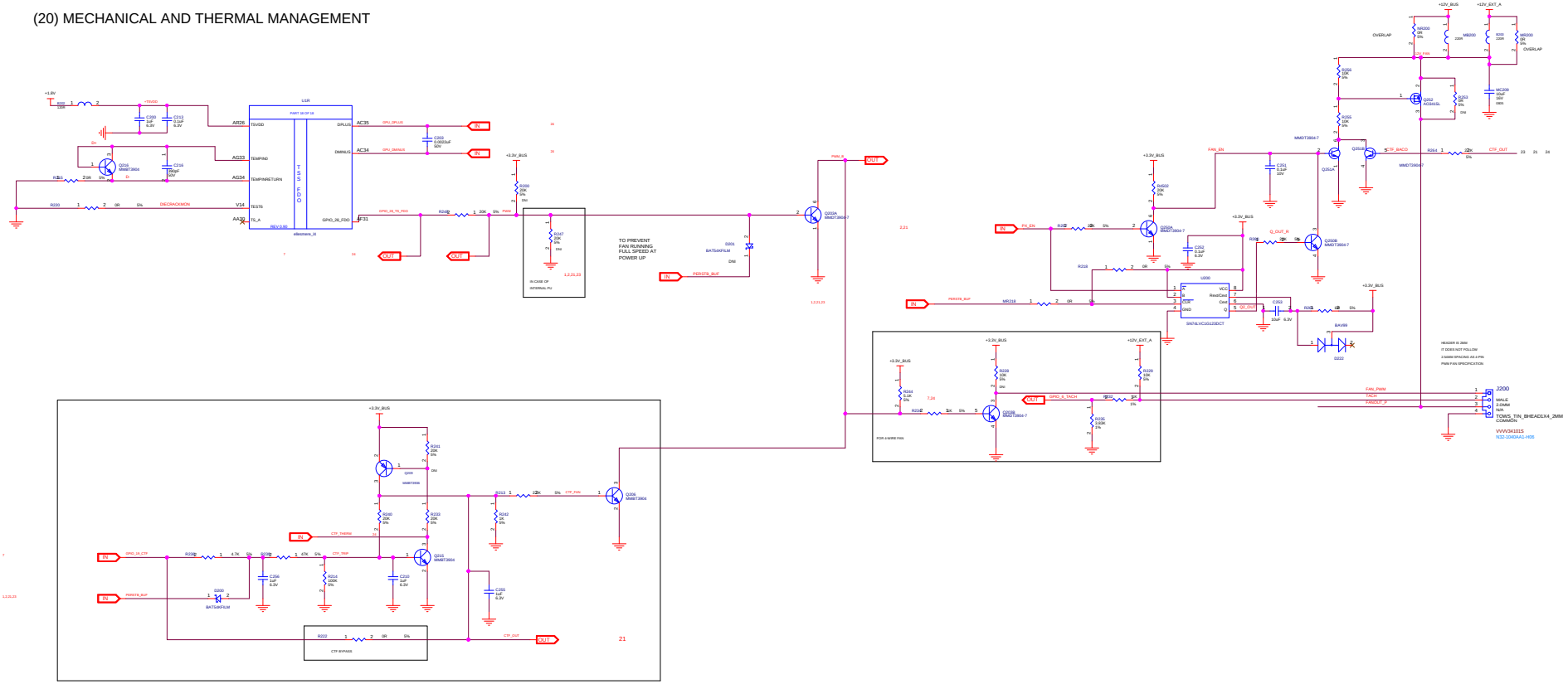

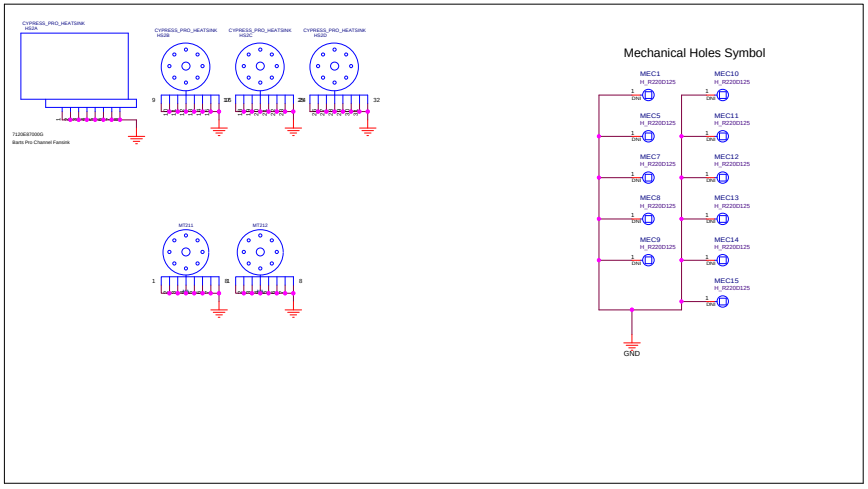

Mechanical Holes Symbol

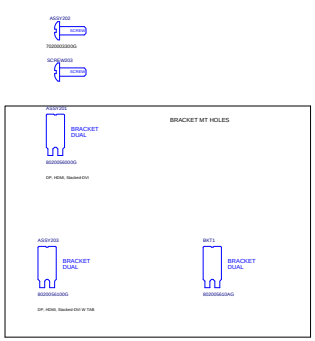

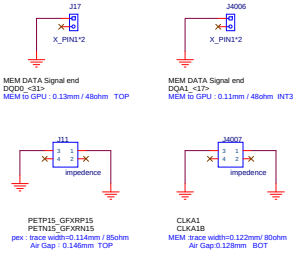

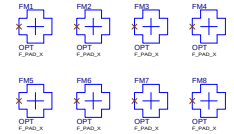

MICRO-STAR INT'L CO.,LTD		
MS-V341		
Size: Custom	Document Description: TABLE OF CONTENTS	Rev: 1.0
Date: Thursday, May 12, 2016	Sheet 23 of 26	

(21) DEBUG CIRCUITS

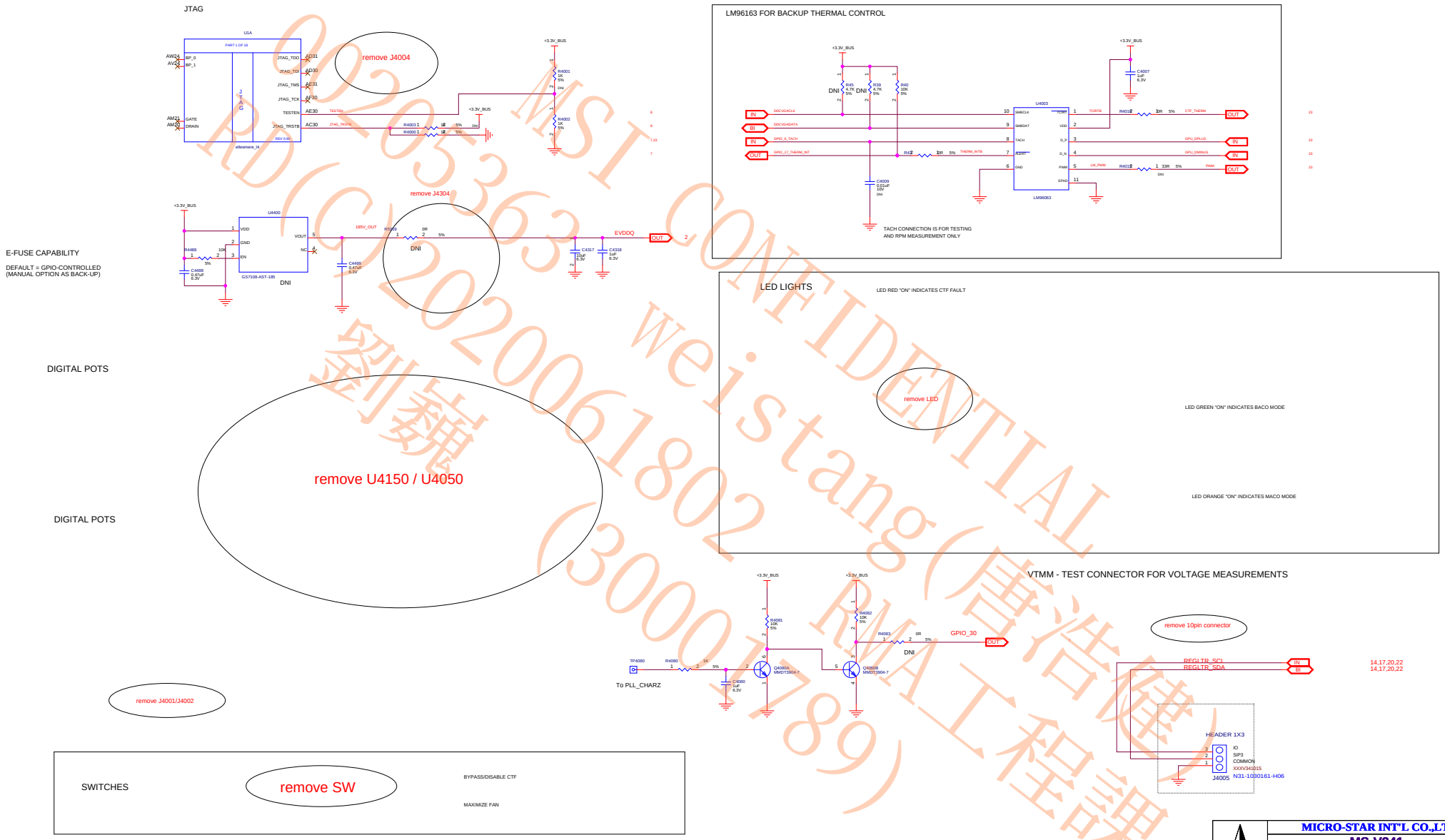

MSI CONFIDENTIAL
weistang(唐浩健)
RMA工程課
(30001789)
劉巍
09205363
RD(C)20200061802

MICRO-STAR INT'L CO.,LTD		
MS-V341		
Size: Custom	Document Description: TABLE OF CONTENTS	Rev: 1.0
Date: Monday, May 09, 2016	Sheet 24 of 26	

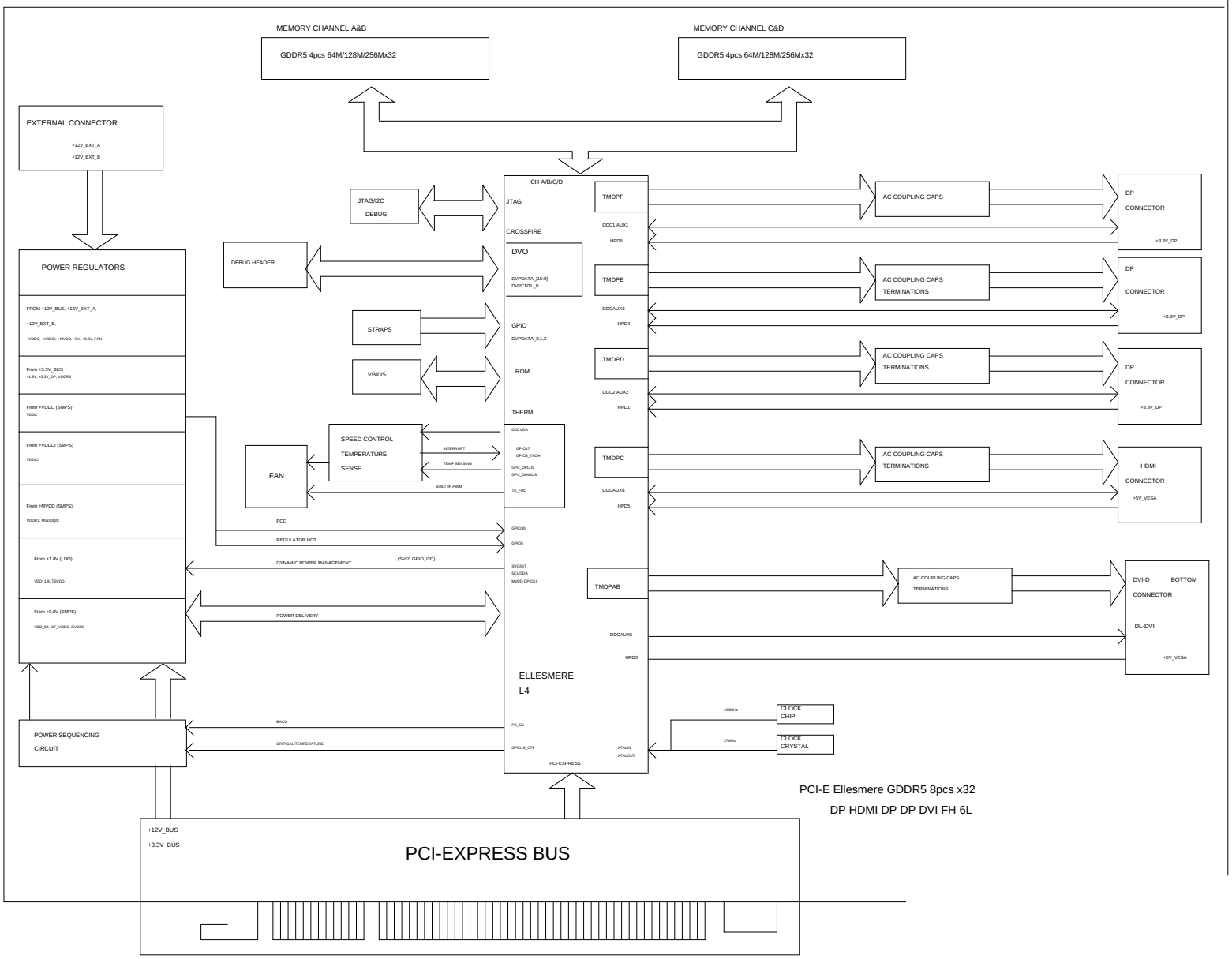

PCI-E Ellesmere GDDR5 8pcs x32

DP HDMI DP DP DVI FH 6L

MICRO-STAR INT'L CO.,LTD		
MS-V341		
Size: Custom	Document Description: TABLE OF CONTENTS	Rev: 1.0
Date: Wednesday, May 04, 2016	Sheet 25 of 26	

0	00A	08/28/2015	
1	00B	10/19/2015	1. Add GPIOs for dynamic VDDCI 2. update VDDC driver sequence
2	00C	03/23/2016	HDMI: - add series resistor R1880 ~R1887 - add pull down inductor L1880 ~L1887 remove C405, C403, VR400,C410,C414,R405

Page7: remove J2,J3

Page9: enable DVI

Page10: DP change to HDMI

Page15: change dual-N MOS

Page16: change dual-N MOS

Page18: change dual-N MOS

Page20: Add LED circuit

Page21: colay 8pin power connecter

Page24: remove debug circuit

MSI CONFIDENTIAL
00205363 weistang(唐浩健)
RD(C)2020061802 RMA工程課
劉巍 (30001789)

MICRO-STAR INT'L CO.,LTD			
MS-V341			
Size Custom	Document Description TABLE OF CONTENTS		Rev 1.0
Date: Wednesday, May 04, 2016		Sheet 26 of 26	