1. ALL RESISTANCE VALUES ARE IN OHMS, 0.1 WATT +/- 5%.
2. ALL CAPACITANCE VALUES ARE IN MICROFARADS.
3. ALL CRYSTALS & OSCILLATOR VALUES ARE IN HERTZ.

VICE MLB

2/4/2010 PVT

K48-DRI

REV	ECN	DESCRIPTION OF REVISION	CK APPD / DATE
B	0000854735	PRODUCTION RELEASED	2010-02-04

PDF	CSA	CONTENTS	SYNC MASTER	DATE
1	1	TABLE OF CONTENTS		
2	2	SYSTEM BLOCK DIAGRAM	ALEX	05/02/2009
3	3	POWER BLOCK DIAGRAM	MARK	12/04/2009
4	4	CONFIGURATION OPTIONS	MIAMI	08/06/2009
5	5	FUNC/ICT TEST/BRACKETS	MIAMI	09/16/2009
6	6	AP MAIN	JAMES	12/21/2009
7	7	AP PWR,AP BB&WIFI	JAMES	12/21/2009
8	8	AP NAND & GPIO, NOR	JAMES	12/21/2009
9	9	AP RGB/CLCD,CAMERA	JAMES	12/21/2009
10	10	AP TVOUT	JAMES	12/21/2009
11	11	3G AND DEBUG MUXES	JAMES	12/21/2009
12	12	AP MISC & ALIASES	JAMES	12/21/2009
13	14	MLC	MIAMI	09/16/2009
14	15	MLC ALIASES	MIAMI	09/16/2009
15	17	Power Conn / Alias	MARK	12/04/2009
16	18	DCIN POWER PATH	MARK	12/04/2009
17	19	CHARGER	MARK	12/04/2009
18	20	PMU	MARK	12/04/2009
19	21	PMU	MARK	12/04/2009
20	24	3.3V SUPPLY	MARK	12/04/2009
21	26	LED BACKLIGHT CONTROLLER	MARK	12/04/2009
22	29	DEBUG RESET ACCESS	MIAMI	09/16/2009
23	30	GRAPE 1 OF 2	JAMES	12/21/2009
24	31	GRAPE 2 OF 2	JAMES	12/21/2009
25	32	LVDS CONNECTOR	MIAMI	09/16/2009
26	34	MOTION,GYRO,COMPASS/THERM	MIAMI	09/16/2009
27	35	USB MUX/BRK DET	MIAMI	09/16/2009
28	36	L61 AUDIO INTERFACE	AUDIO	12/04/2009
29	37	AUDIO: SPEAKER AMP	AUDIO	12/04/2009
30	38	AUDIO:HEADPHONE OUT	AUDIO	12/04/2009
31	39	AUDIO: LINE OUT DOCK ESD CIRCUIT	AUDIO	12/04/2009
32	40	AUDIO: AUDIENCE	AUDIO	12/04/2009
33	42	AUDIO: DETECT/MIC BIAS	AUDIO	12/04/2009
34	43	AUDIO: HP CONN	AUDIO	12/04/2009
35	45	ALS CONNECTOR	MIAMI	09/16/2009
36	48	I/O EXPANDER	JAMES	12/21/2009
37	49	DISPLAY PORT SWITCH	JAMES	12/21/2009
38	50	44-PIN LANDSCAPE DOCK CONN	JAMES	12/21/2009
39	51	60-PIN PORTRAIT DOCK CONN	JAMES	12/21/2009
40	54	BUTTONS CONNECTOR	MIAMI	09/16/2009
41	55	3G CONNECTOR	MIAMI	09/16/2009
42	57	PROX SENSOR	MARKSIN	10/14/2009
43	67	FLASH	MIAMI	09/16/2009
44	100	CONSTRAINTS	MIAMI	09/16/2009
45	101	MORE CONSTRAINTS	MIAMI	09/16/2009
46	106	PHYSICAL/SPACING RULES	MIAMI	09/16/2009
47	113	Cross Reference Page		
48	114	Cross Reference Page		
49	115	Cross Reference Page		
50	116	Cross Reference Page		
51	117	Cross Reference Page		
52	118	Cross Reference Page		
53	119	Cross Reference Page		

DRAWING
TITLE=U230
ABBREV=DRAWING
LAST_MODIFIED=Thu Feb 4 00:41:44 2010

820-2740-05 TOP 絲印圖

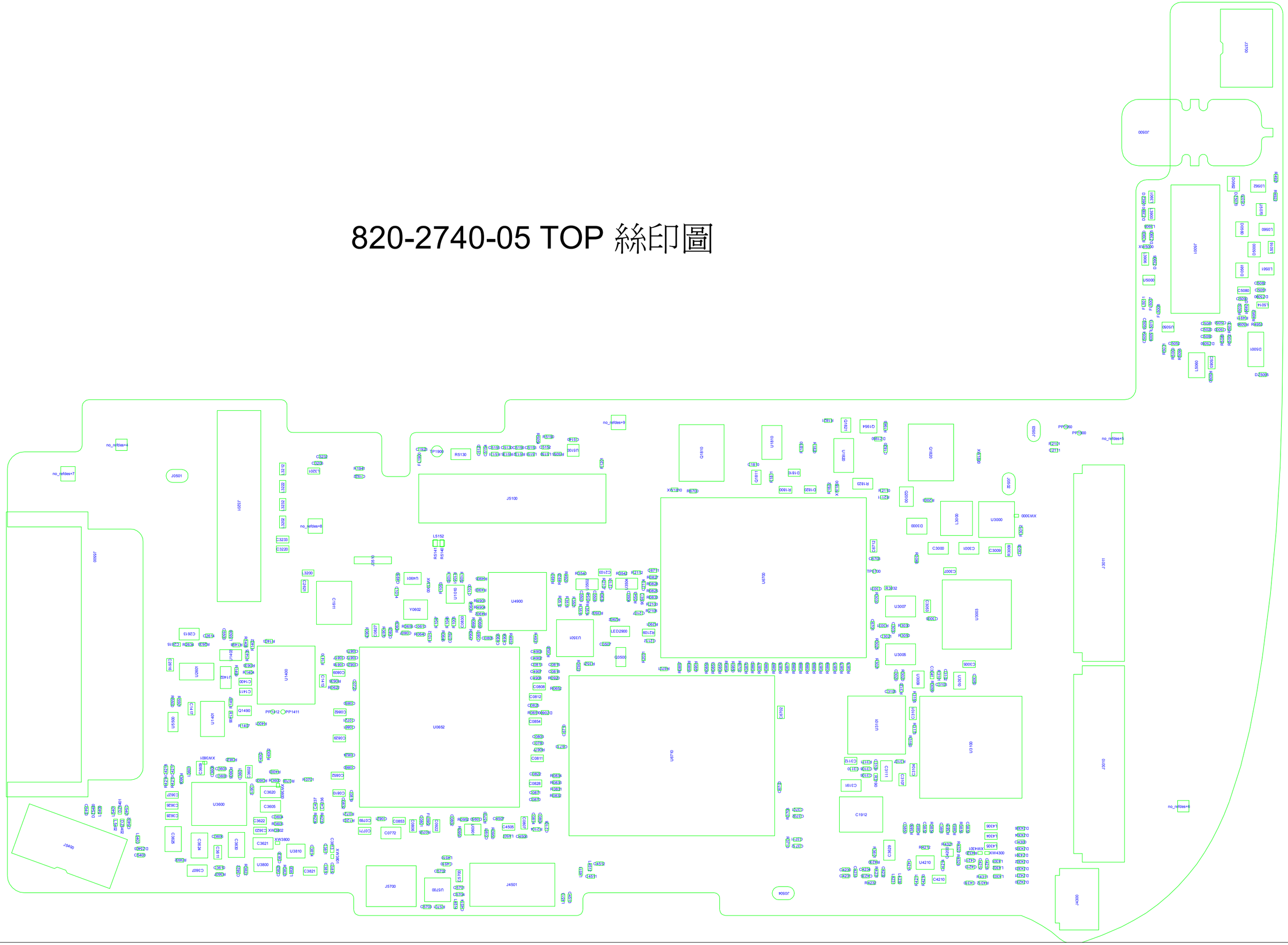

820-2740-05 BOTTOM 絲印圖

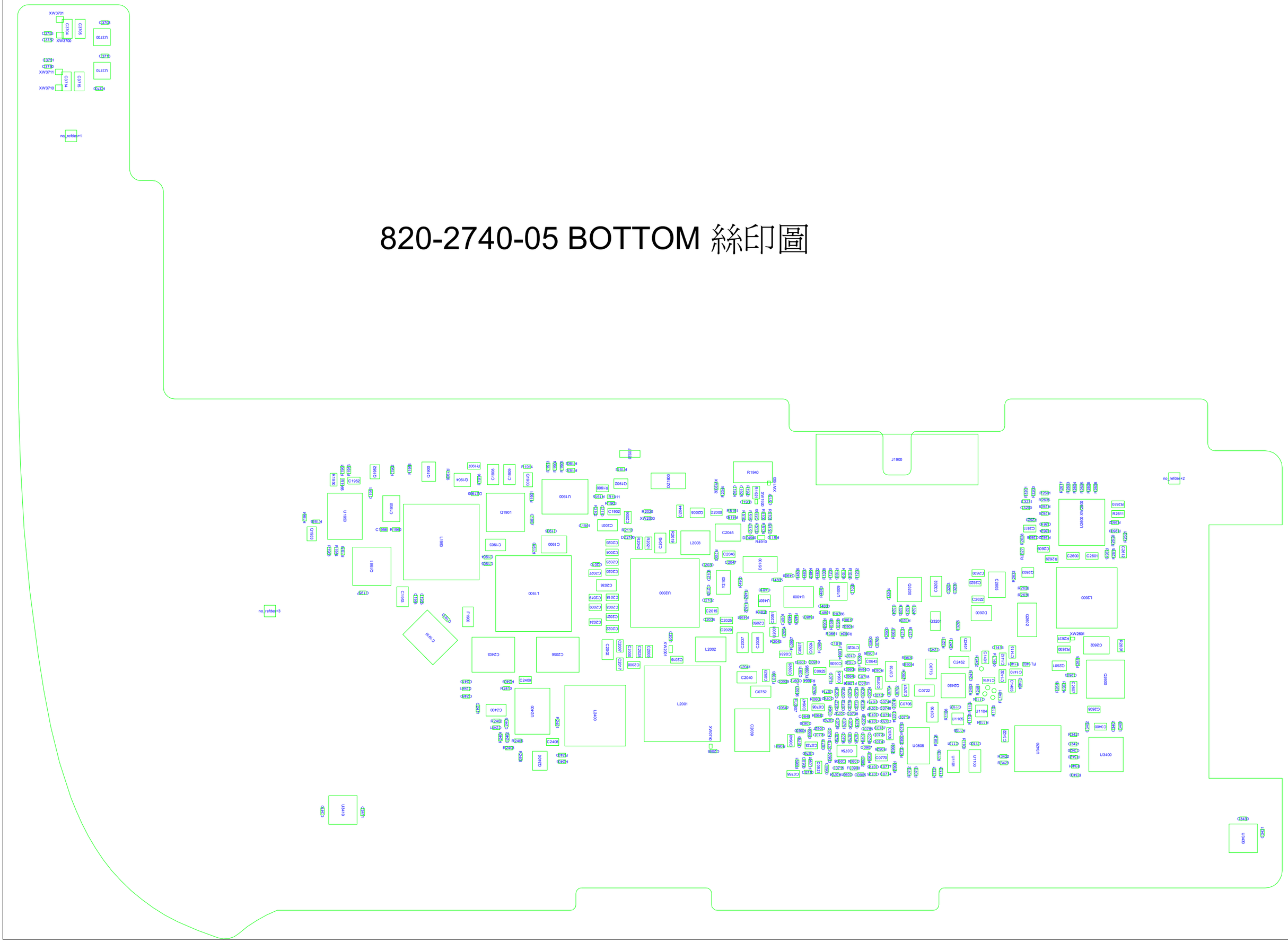

VICE BLOCK DIAGRAM

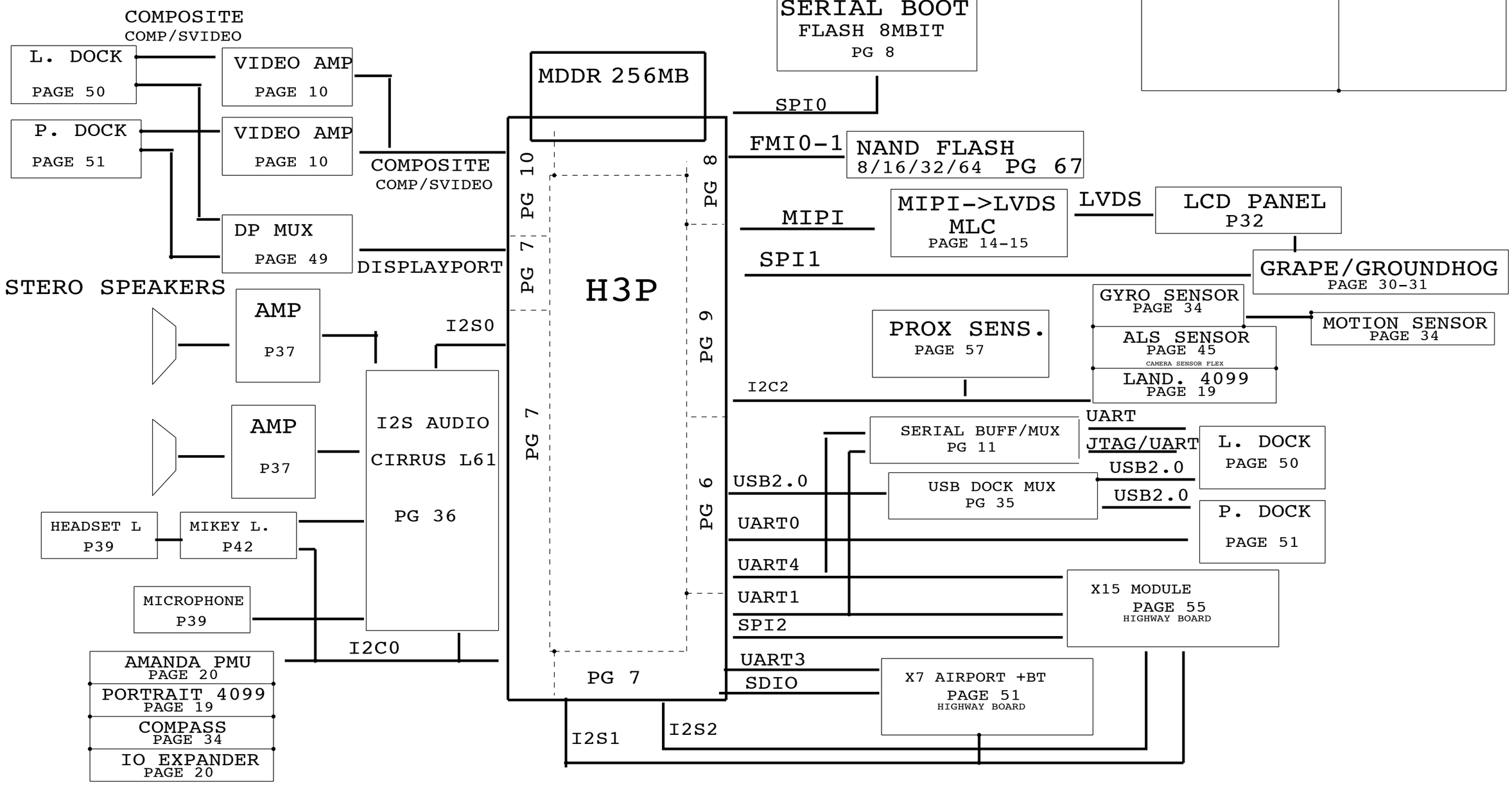

Voltage Rails

POWER PLANE	ON STATE

POWER BLOCK DIAGRAM

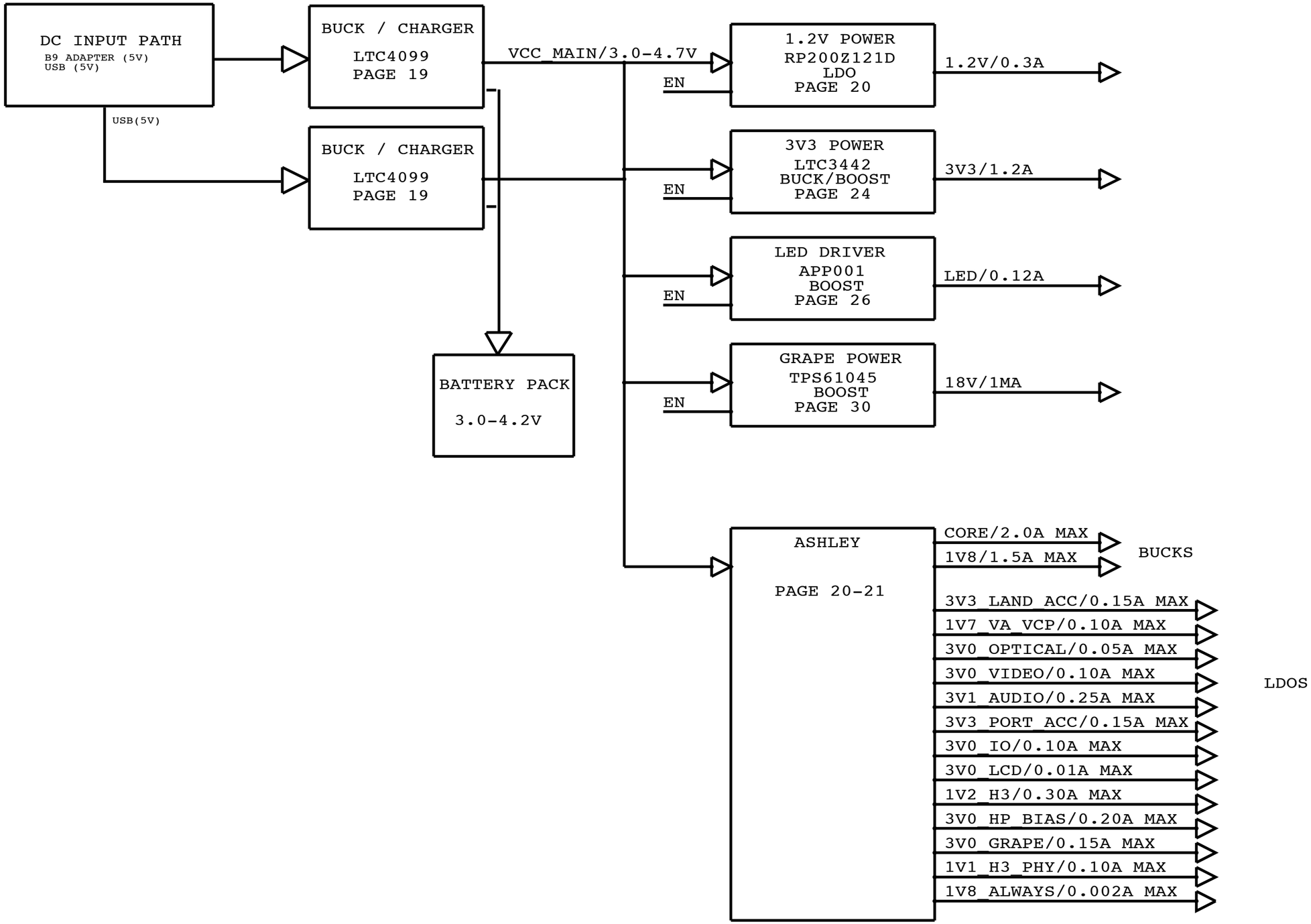

Page Notes

Power aliases required by this page:
(NONE)

Signal aliases required by this page:
(NONE)

BOM options provided by this page:

ALL AVAIL BOM OPTIONS

COMMON
ALTERNATE
DPMUX
32GB_FLASH_SAM
32GB_FLASH
16GB_FLASH
16GB_FLASH_TOSH

8GB_FLASH
8GB_FLASH_SAM
BKLT_PLL
CAMERA
JTAG_2_WIRE
JTAG_3_WIRE
PRODUCTION
DEVELOPMENT
AUD10
MIKEY
INTERNAL_MIC
LANDSCAPE_DOCK
LEFT_HS
LINE_OUT_1
LINE_OUT_2

PORTRAIT_DOCK

SPEAKER

ADD DEVELOPMENT AND OTHER BOMS ONCE YOU GET BOM NUMBERS

BOM GROUP	BOM OPTIONS
BASIC	COMMON,ALTERNATE
AUDIO	LEFT_HS,SPEAKER,INTERNAL_MIC

USE SCHUTIL BOMCONFIG TO GENERATE CONFIG FILE.
PUT CONFIG FILE AT SAME LEVEL AS .CPM FILE
USE "READ BOM-CONFIG" BUTTON ON DMS TO READ IN BOMS

BOM OPTIONS

PROGRAMMABLE PARTS

PART#	QTY	DESCRIPTION	REFERENCE DESIGNATOR(S)	BOM OPTION

VICE BOM OPTIONS

SCH AND BOARD P/N

PART#	QTY	DESCRIPTION	REFERENCE DESIGNATOR(S)	BOM OPTION
051-8245	1	SCHEM,VICE,MLB,K48	SCH1	
820-2740	1	PCBA,VICE,MLB,K48	PCB1	

PART#	QTY	DESCRIPTION	REFERENCE DESIGNATOR(S)	BOM OPTION
085-1028	1	DEV,VICE,MLB,K48	DEV1	K48_DEV
085-1133	1	DEV,VICE,MLB,K48M	DEV1	K48M_DEV

USE 825-6447
NEED MORE LINE ITEMS FOR OTHER CONFIGURATIONS

BARCODE LABEL/EEE CODES

PART#	QTY	DESCRIPTION	REFERENCE DESIGNATOR(S)	CRITICAL	BOM OPTION
825-7456	1	EEE FOR 639-0455 (16G)	EEE_BWY	CRITICAL	EEE_16G
825-7456	1	EEE FOR 639-0601 (32G)	EEE_D66	CRITICAL	EEE_32G
825-7456	1	EEE FOR 639-0598 (64G)	EEE_D61	CRITICAL	EEE_64G
825-7456	1	EEE FOR 639-0602 (16G)M	EEE_D67	CRITICAL	EEE_16G_M
825-7456	1	EEE FOR 639-0599 (32G)M	EEE_D62	CRITICAL	EEE_32G_M
825-7456	1	EEE FOR 639-0600 (64G)M	EEE_D63	CRITICAL	EEE_64G_M

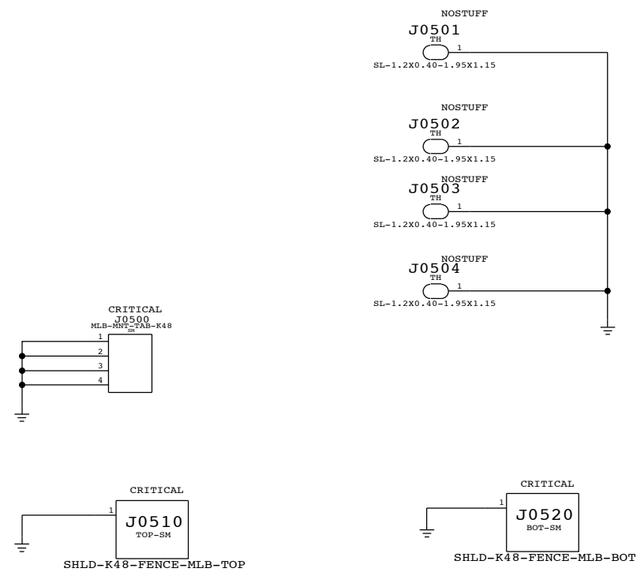
NOSTUFF
J0501
TH
1
SL-1.2X0.40-1.95X1.15
NOSTUFF
J0502
TH
1
SL-1.2X0.40-1.95X1.15
NOSTUFF
J0503
TH
1
SL-1.2X0.40-1.95X1.15
NOSTUFF
J0504
TH
1
SL-1.2X0.40-1.95X1.15
CRITICAL
J0500
MLB-NNT_TAB-K48
1
2
3
4
CRITICAL
1
J0510
TOP-SM
SHLD-K48-FENCE-MLB-TOP
CRITICAL
1
J0520
BOT-SM
SHLD-K48-FENCE-MLB-BOT

PART NUMBER	ALTERNATE FOR PART NUMBER	BOM OPTION	REF DES	COMMENTS:
339S0100	339S0084		U0652	HYNIX DDR

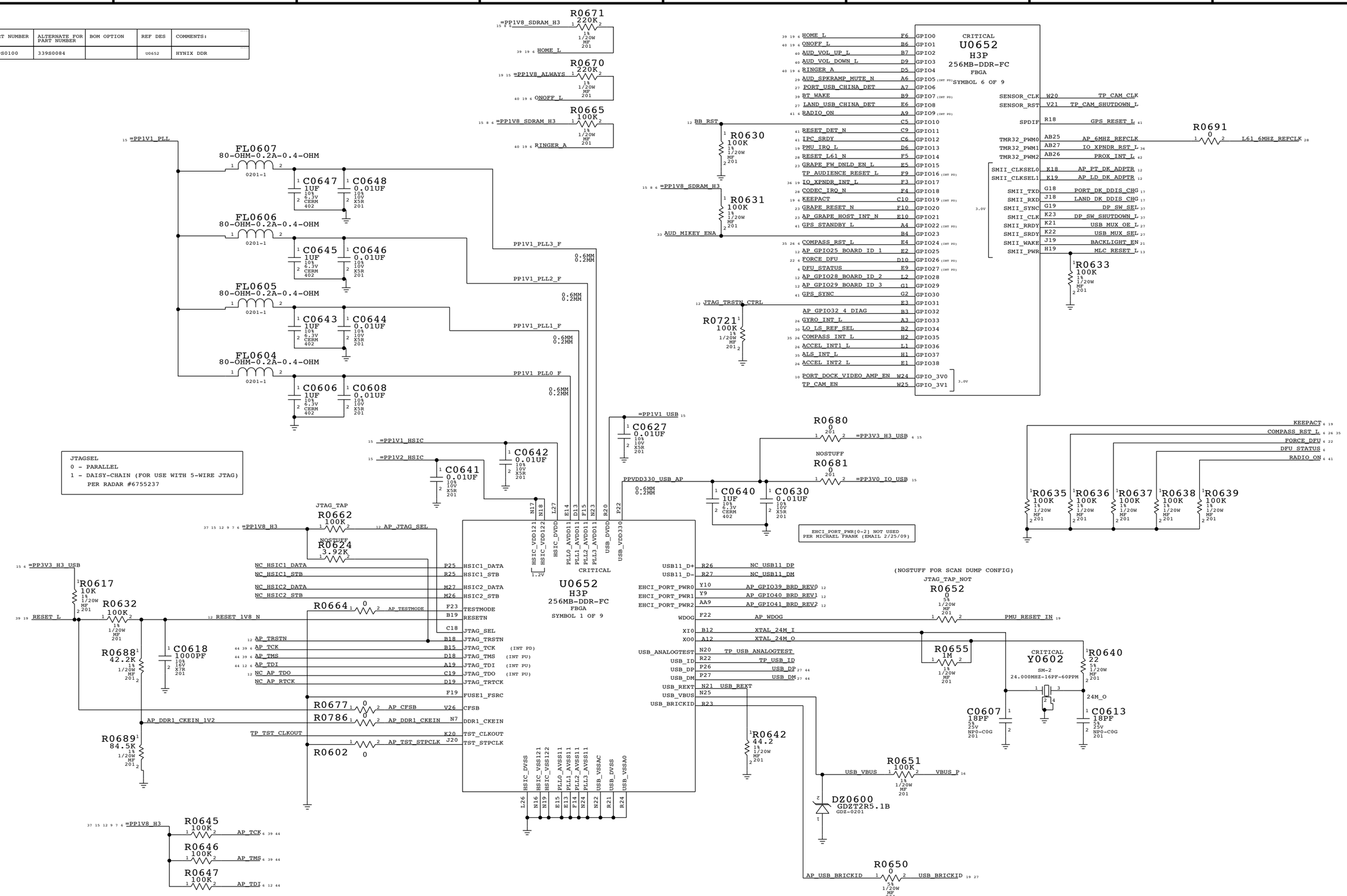

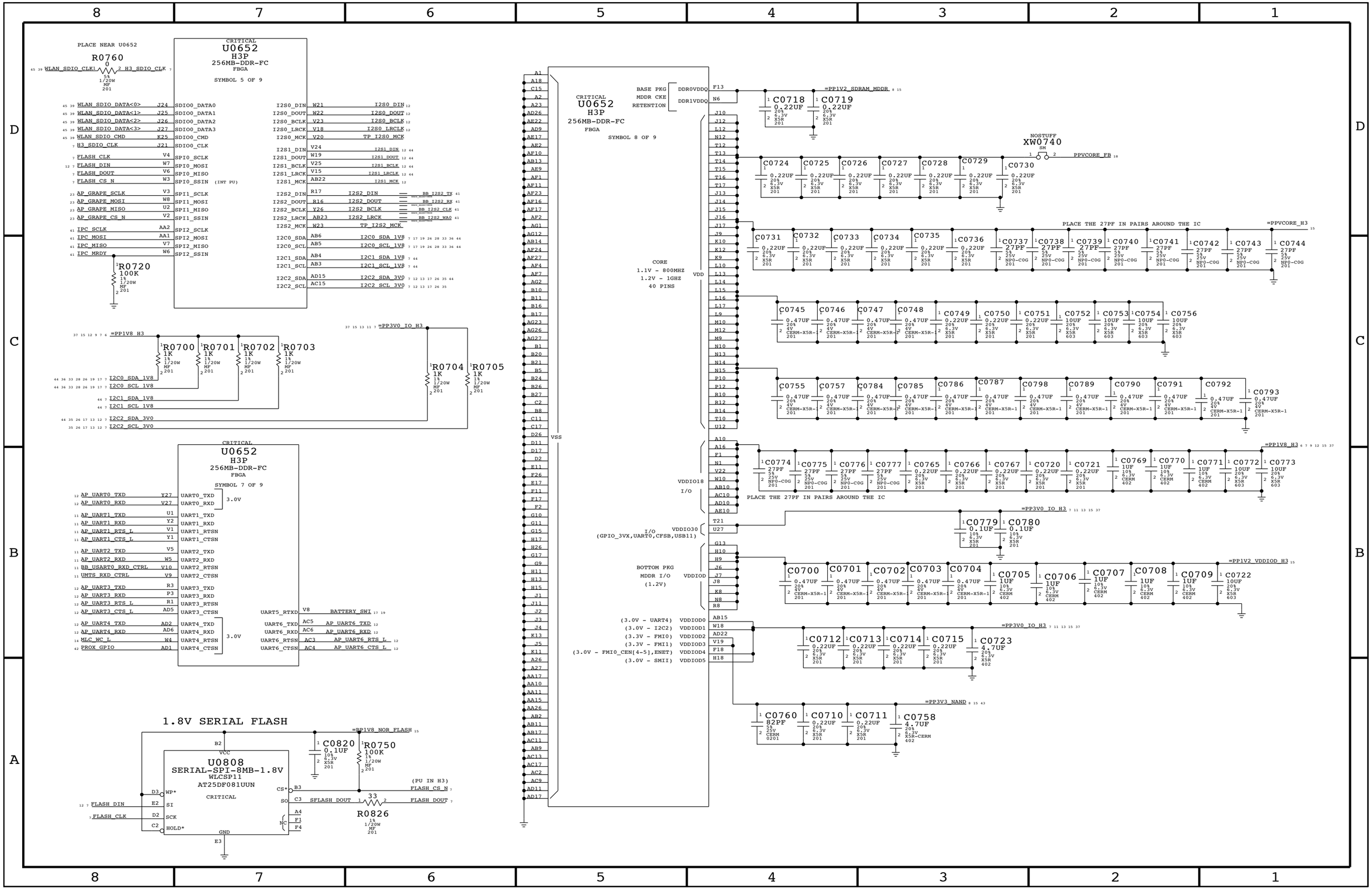
PLACE NEAR U0652
R0760
WLAN_SDIO_CLK
H3_SDIO_CLK
CRITICAL
U0652
H3P
256MB-DDR-FC
FBGA
SYMBOL 5 OF 9
WLAN_SDIO_DATA<0>
WLAN_SDIO_DATA<1>
WLAN_SDIO_DATA<2>
WLAN_SDIO_DATA<3>
WLAN_SDIO_CMD
H3_SDIO_CLK
FLASH_CLK
FLASH_DIN
FLASH_DOUT
FLASH_CS_N
AP_GRAPE_SCLK
AP_GRAPE_MOSI
AP_GRAPE_MISO
AP_GRAPE_CS_N
IPC_SCLK
IPC_MOSI
IPC_MISO
IPC_MRDY
R0720
100K
=PP1V8_H3
R0700
R0701
R0702
R0703
=PP3V0_IO_H3
R0704
R0705
I2C0_SDA_1V8
I2C0_SCL_1V8
I2C1_SDA_1V8
I2C1_SCL_1V8
I2C2_SDA_3V0
I2C2_SCL_3V0
SYMBOL 7 OF 9
AP_UART0_TXD
AP_UART0_RXD
AP_UART1_TXD
AP_UART1_RXD
AP_UART1_RTS_L
AP_UART1_CTS_L
AP_UART2_TXD
AP_UART2_RXD
BB_USART0_RXD_CTRL
UMTS_RXD_CTRL
AP_UART3_TXD
AP_UART3_RXD
AP_UART3_RTS_L
AP_UART3_CTS_L
AP_UART4_TXD
AP_UART4_RXD
MLC_WC_L
PROX_GPIO
BATTERY_SWI
AP_UART6_TXD
AP_UART6_RXD
AP_UART6_RTS_L
AP_UART6_CTS_L
1.8V SERIAL FLASH
=PP1V8_NOR_FLASH
C0820
R0750
100K
U0808
SERIAL-SPI-8MB-1.8V
WLCSP11
AT25DF081UUN
CRITICAL
(PU IN H3)
FLASH_CS_N
SFLASH_DOUT
FLASH_DOUT
R0826
33
SYMBOL 8 OF 9
BASE PKG
MDDR CKE
RETENTION
DDR0VDDQ
DDR1VDDQ
=PP1V2_SDRAM_MDDR
C0718
C0719
NOSTUFF
XW0740
PPVCORE_FB
C0724
C0725
C0726
C0727
C0728
C0729
C0730
CORE
1.1V - 800MHZ
1.2V - 1GHZ
40 PINS
VDD
PLACE THE 27PF IN PAIRS AROUND THE IC
=PPVCORE_H3
C0731
C0732
C0733
C0734
C0735
C0736
C0737
C0738
C0739
C0740
C0741
C0742
C0743
C0744
C0745
C0746
C0747
C0748
C0749
C0750
C0751
C0752
C0753
C0754
C0756
C0755
C0757
C0784
C0785
C0786
C0787
C0798
C0789
C0790
C0791
C0792
C0793
VSS
VDDIO18
I/O
C0774
C0775
C0776
C0777
C0765
C0766
C0767
C0720
C0721
C0769
C0770
C0771
C0772
C0773
=PP1V8_H3
VDDIO30
(GPIO_3VX,UART0,CFSB,USB11)
C0779
C0780
=PP3V0_IO_H3
BOTTOM PKG
MDDR I/O
(1.2V)
VDDIOD
C0700
C0701
C0702
C0703
C0704
C0705
C0706
C0707
C0708
C0709
C0722
=PP1V2_VDDIOD_H3
(3.0V - UART4) VDDIOD0
(3.0V - I2C2) VDDIOD1
(3.3V - FMI0) VDDIOD2
(3.3V - FMI1) VDDIOD3
(3.0V - FMI0_CEN[4-5],ENET) VDDIOD4
(3.0V - SMII) VDDIOD5
C0712
C0713
C0714
C0715
C0723
=PP3V3_NAND
C0760
C0710
C0711
C0758

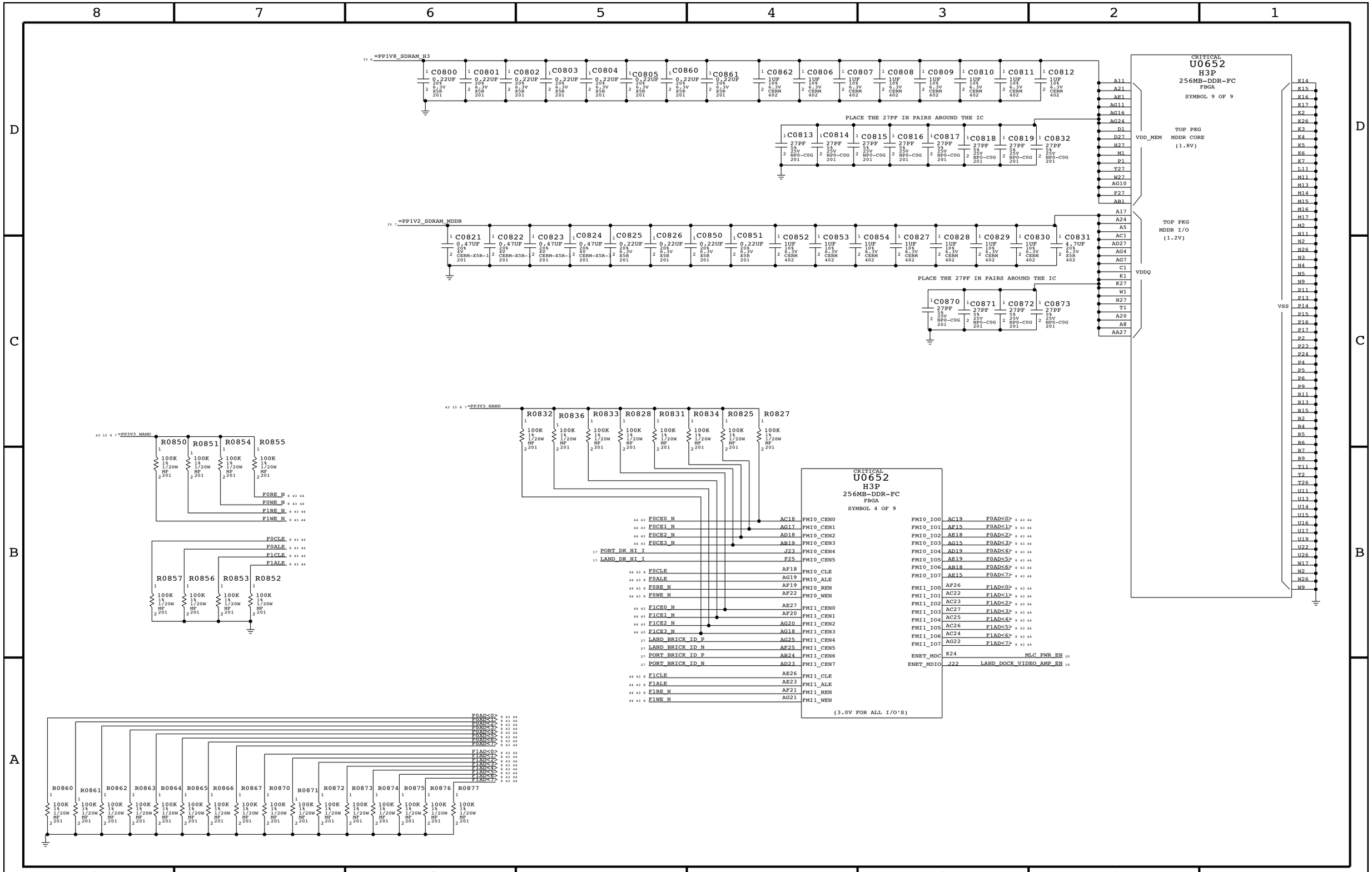
=PP1V8_SDRAM_H3
C0800 C0801 C0802 C0803 C0804 C0805 C0860 C0861 C0862 C0806 C0807 C0808 C0809 C0810 C0811 C0812
PLACE THE 27PF IN PAIRS AROUND THE IC
C0813 C0814 C0815 C0816 C0817 C0818 C0819 C0832
=PP1V2_SDRAM_MDDR
C0821 C0822 C0823 C0824 C0825 C0826 C0850 C0851 C0852 C0853 C0854 C0827 C0828 C0829 C0830 C0831
PLACE THE 27PF IN PAIRS AROUND THE IC
C0870 C0871 C0872 C0873
CRITICAL
U0652
H3P
256MB-DDR-FC
FBGA
SYMBOL 9 OF 9
VDD_MEM
TOP PKG
MDDR CORE
(1.8V)
TOP PKG
MDDR I/O
(1.2V)
VDDQ
VSS
=PP3V3_NAND
R0832 R0836 R0833 R0828 R0831 R0834 R0825 R0827
R0850 R0851 R0854 R0855
F0RE_N
F0WE_N
F1RE_N
F1WE_N
F0CLE
F0ALE
F1CLE
F1ALE
R0857 R0856 R0853 R0852
CRITICAL
U0652
H3P
256MB-DDR-FC
FBGA
SYMBOL 4 OF 9
F0CE0_N
F0CE1_N
F0CE2_N
F0CE3_N
PORT_DK_HI_I
LAND_DK_HI_I
F0CLE
F0ALE
F0RE_N
F0WE_N
F1CE0_N
F1CE1_N
F1CE2_N
F1CE3_N
LAND_BRICK_ID_P
LAND_BRICK_ID_N
PORT_BRICK_ID_P
PORT_BRICK_ID_N
F1CLE
F1ALE
F1RE_N
F1WE_N
FMI0_CEN0
FMI0_CEN1
FMI0_CEN2
FMI0_CEN3
FMI0_CEN4
FMI0_CEN5
FMI0_CLE
FMI0_ALE
FMI0_REN
FMI0_WEN
FMI1_CEN0
FMI1_CEN1
FMI1_CEN2
FMI1_CEN3
FMI1_CEN4
FMI1_CEN5
FMI1_CEN6
FMI1_CEN7
FMI1_CLE
FMI1_ALE
FMI1_REN
FMI1_WEN
(3.0V FOR ALL I/O'S)
FMI0_IO0 FMI0_IO1 FMI0_IO2 FMI0_IO3 FMI0_IO4 FMI0_IO5 FMI0_IO6 FMI0_IO7
F0AD<0> F0AD<1> F0AD<2> F0AD<3> F0AD<4> F0AD<5> F0AD<6> F0AD<7>
FMI1_IO0 FMI1_IO1 FMI1_IO2 FMI1_IO3 FMI1_IO4 FMI1_IO5 FMI1_IO6 FMI1_IO7
F1AD<0> F1AD<1> F1AD<2> F1AD<3> F1AD<4> F1AD<5> F1AD<6> F1AD<7>
ENET_MDC
ENET_MDIO
MLC_PWR_EN
LAND_DOCK_VIDEO_AMP_EN
R0860 R0861 R0862 R0863 R0864 R0865 R0866 R0867 R0870 R0871 R0872 R0873 R0874 R0875 R0876 R0877

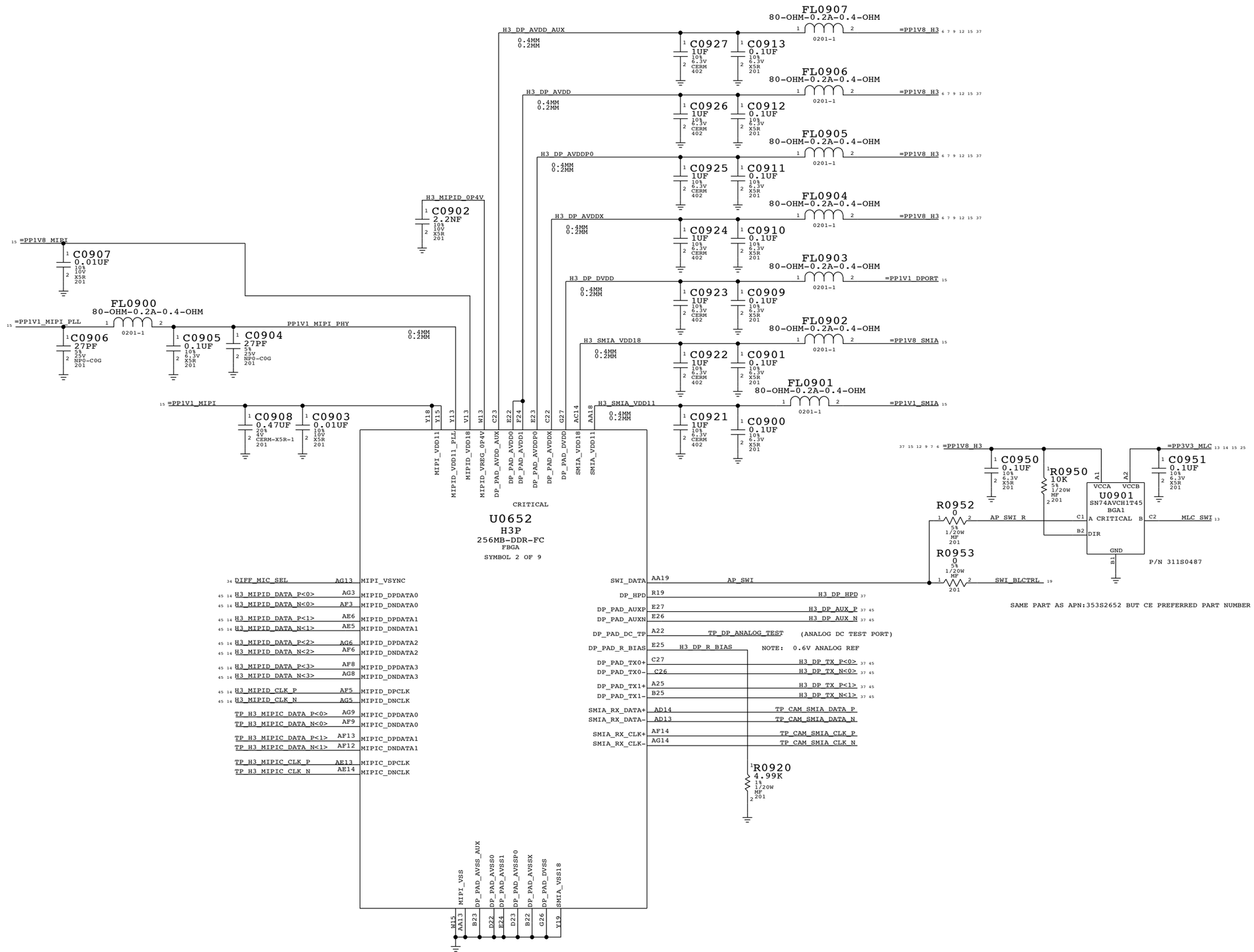
FL0907
80-OHM-0.2A-0.4-OHM
FL0906
80-OHM-0.2A-0.4-OHM
FL0905
80-OHM-0.2A-0.4-OHM
FL0904
80-OHM-0.2A-0.4-OHM
FL0903
80-OHM-0.2A-0.4-OHM
FL0902
80-OHM-0.2A-0.4-OHM
FL0901
80-OHM-0.2A-0.4-OHM
FL0900
80-OHM-0.2A-0.4-OHM
H3_DP_AVDD_AUX
H3_DP_AVDD
H3_DP_AVDDP0
H3_DP_AVDDX
H3_DP_DVDD
H3_SMIA_VDD18
H3_SMIA_VDD11
H3_MIPID_0P4V
=PP1V8_MIPI
=PP1V1_MIPI_PLL
PP1V1_MIPI_PHY
=PP1V1_MIPI
=PP1V8_H3
=PP1V1_DPORT
=PP1V8_SMIA
=PP1V1_SMIA
=PP3V3_MLC
U0652
H3P
256MB-DDR-FC
FBGA
SYMBOL 2 OF 9
CRITICAL
U0901
SN74AVCH1T45
BGA1
P/N 311S0487
SAME PART AS APN:353S2652 BUT CE PREFERRED PART NUMBER
(ANALOG DC TEST PORT)
NOTE: 0.6V ANALOG REF

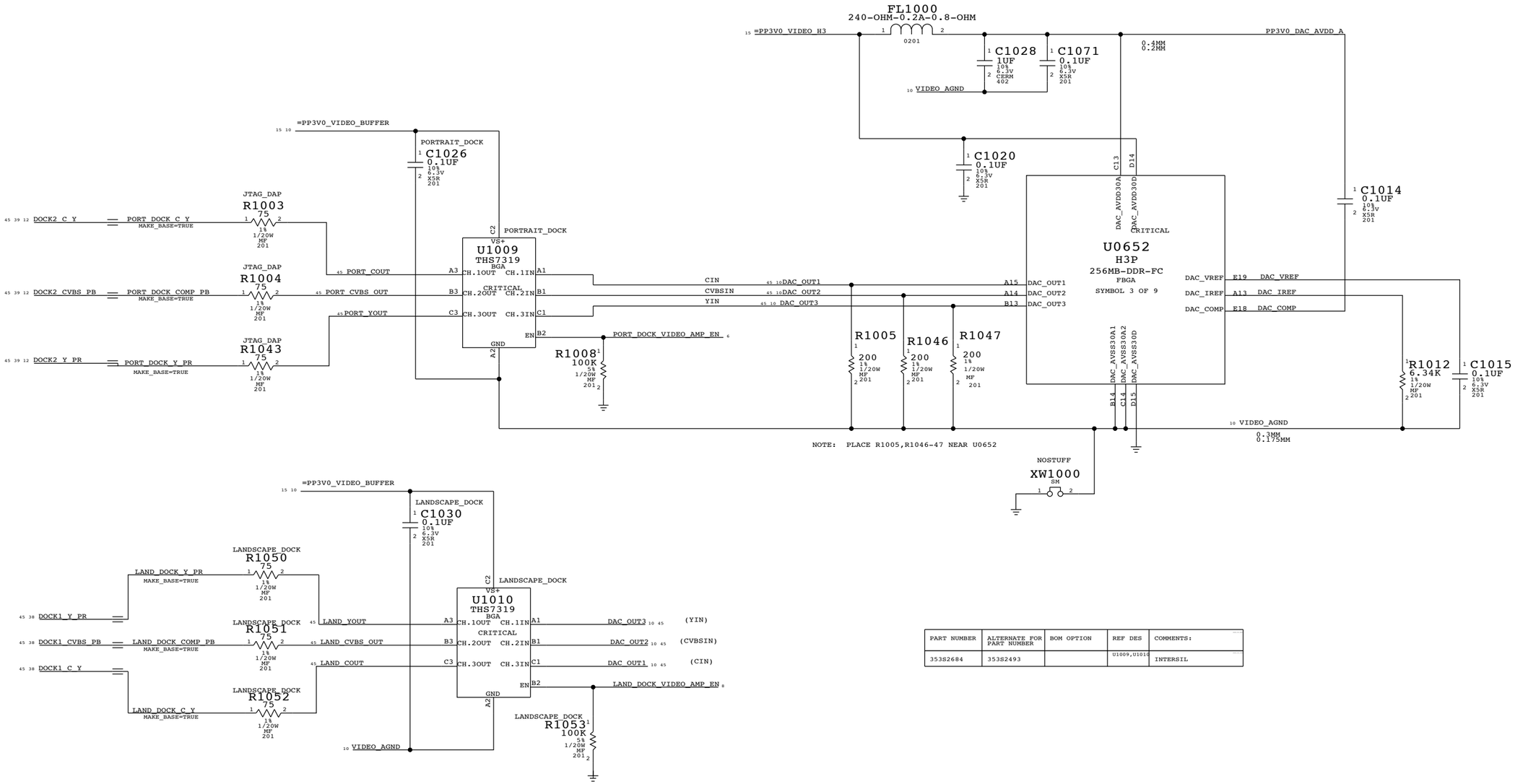

PART NUMBER	ALTERNATE FOR PART NUMBER	BOM OPTION	REF DES	COMMENTS:
353S2684	353S2493		U1009,U1010	INTERSIL

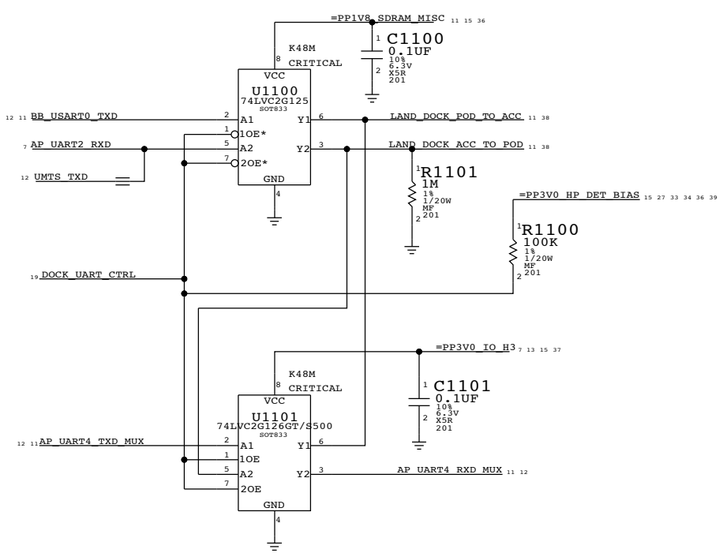
=PP1V8_SDRAM_MISC
C1100
0.1UF
10%
6.3V
X5R
201
K48M
CRITICAL
U1100
74LVC2G125
SOT833
VCC
A1
1OE*
A2
2OE*
GND
Y1
Y2
BB_USART0_TXD
AP_UART2_RXD
UMTS_TXD
LAND_DOCK_POD_TO_ACC
LAND_DOCK_ACC_TO_POD
R1101
1M
1%
1/20W
MF
201
=PP3V0_HP_DET_BIAS
R1100
100K
DOCK_UART_CTRL
=PP3V0_IO_H3
C1101
0.1UF
U1101
74LVC2G126GT/S500
1OE
2OE
AP_UART4_TXD_MUX
AP_UART4_RXD_MUX

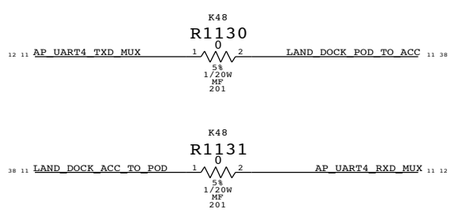
K48
R1130
0
5%
1/20W
MF
201
AP_UART4_TXD_MUX
LAND_DOCK_POD_TO_ACC
K48
R1131
0
LAND_DOCK_ACC_TO_POD
AP_UART4_RXD_MUX

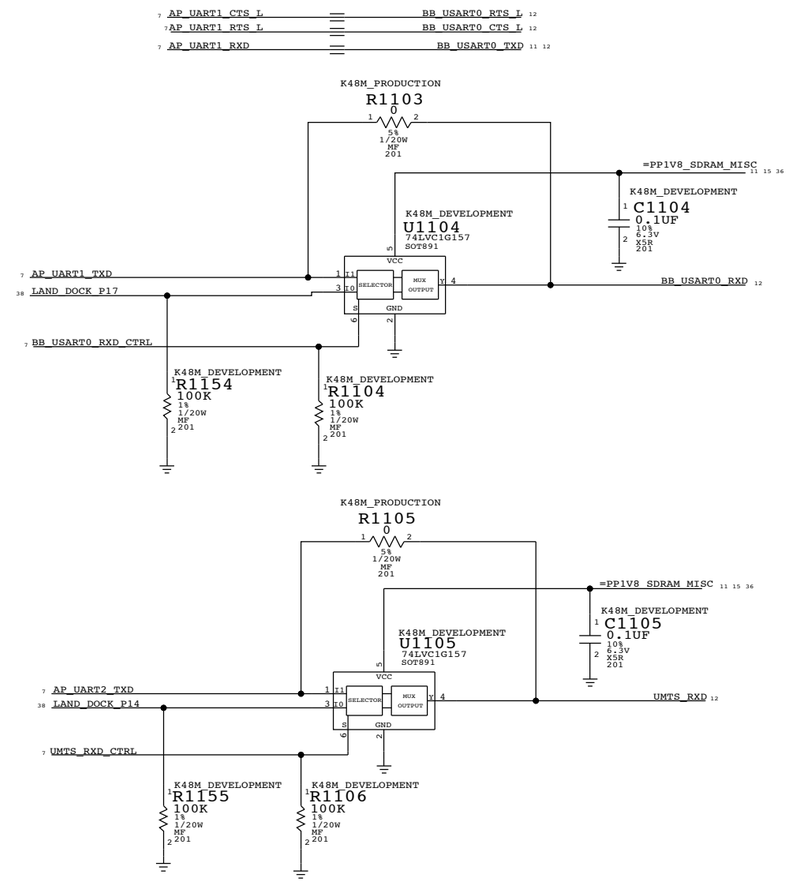
AP_UART1_CTS_L
AP_UART1_RTS_L
AP_UART1_RXD
BB_USART0_RTS_L
BB_USART0_CTS_L
BB_USART0_TXD
K48M_PRODUCTION
R1103
0
5%
1/20W
MF
201
=PP1V8_SDRAM_MISC
K48M_DEVELOPMENT
C1104
0.1UF
10%
6.3V
X5R
201
U1104
74LVC1G157
SOT891
VCC
SELECTOR
MUX OUTPUT
GND
AP_UART1_TXD
LAND_DOCK_P17
BB_USART0_RXD
BB_USART0_RXD_CTRL
R1154
100K
1%
1/20W
MF
201
R1104
100K
K48M_PRODUCTION
R1105
0
5%
1/20W
MF
201
=PP1V8_SDRAM_MISC
K48M_DEVELOPMENT
C1105
0.1UF
10%
6.3V
X5R
201
U1105
74LVC1G157
SOT891
VCC
SELECTOR
MUX OUTPUT
GND
AP_UART2_TXD
LAND_DOCK_P14
UMTS_RXD
UMTS_RXD_CTRL
R1155
100K
1%
1/20W
MF
201
R1106
100K
1%
1/20W
MF
201

BOARD ID

37 15 12 9 7 6 =PP1V8_H3

R0625 3.92K 1% 1/20W MF 201

BOARD ID <6> = BOARD_ID[2] — FLASH_DOUT

BOARD ID <5> = BOARD_ID[1] — 7 FLASH_DIN

BOARD ID <4> = BOARD_ID[0] — FLASH_CLK

BOARD_ID[2-0]

010	K48 AP
011	K48 DEV

ALIASES FROM PAGE 7

7 I2S0_DIN	MAKE_BASE=TRUE	AUD_I2S_SDOUT_L61 28
7 I2S0_DOUT	MAKE_BASE=TRUE	AUD_I2S_SDIN_L61 28
7 I2S0_BCLK	MAKE_BASE=TRUE	AUD_I2S_BITCLK_L61 28
7 I2S0_LRCLK	MAKE_BASE=TRUE	AUD_I2S_LRC_L61 28
44 7 I2S1_DIN	MAKE_BASE=TRUE	BB_I2S1_RX 32 41
44 7 I2S1_DOUT	MAKE_BASE=TRUE	BB_I2S1_TX 32 41
44 7 I2S1_BCLK	MAKE_BASE=TRUE	BB_I2S1_CLK 32 41
44 7 I2S1_LRCLK	MAKE_BASE=TRUE	BB_I2S1_WA0 32 41
7 I2S1_MCK	MAKE_BASE=TRUE	L61_I2S_MCLK 28
7 AP_UART0_TXD	MAKE_BASE=TRUE	PORT_DOCK_POD_TO_ACC 39
7 AP_UART0_RXD	MAKE_BASE=TRUE	PORT_DOCK_ACC_TO_POD 39
7 AP_UART6_TXD	MAKE_BASE=TRUE	GPS_UART_RX 41
7 AP_UART6_RXD	MAKE_BASE=TRUE	GPS_UART_TX 41
7 AP_UART6_RTS_L	MAKE_BASE=TRUE	GPS_UARTS_CTS_L 41
7 AP_UART6_CTS_L	MAKE_BASE=TRUE	GPS_UARTS_RTS_L 41

ALIASES FROM PAGE 11

11 BB_USART0_TXD	MAKE_BASE=TRUE	BB_USART0_TXD_CONN 41
11 BB_USART0_RXD	MAKE_BASE=TRUE	BB_USART0_RXD_CONN 41
11 BB_USART0_RTS_L	MAKE_BASE=TRUE	BB_USART0_RTS_L_CONN 41
11 BB_USART0_CTS_L	MAKE_BASE=TRUE	BB_USART0_CTS_L_CONN 41
11 UMTS_TXD	MAKE_BASE=TRUE	UMTS_TXD_CONN 41
11 UMTS_RXD	MAKE_BASE=TRUE	UMTS_RXD_CONN 41
7 AP_UART4_TXD	MAKE_BASE=TRUE	AP_UART4_TXD_MUX 11
7 AP_UART4_RXD	MAKE_BASE=TRUE	AP_UART4_RXD_MUX 11
12 6 AP_GPIO41_BRD_REV2	MAKE_BASE=TRUE	BB_FLASH_ACTIVE 41

ALIASES FROM PAGE 50

38 LAND_USB_PWR	MAKE_BASE=TRUE	USB_PWR_A 16

ALIASES FROM PAGE 51

39 CONN_AP_UART3_RTS_L	MAKE_BASE=TRUE	AP_UART3_RTS_L 7
39 CONN_AP_UART3_CTS_L	MAKE_BASE=TRUE	AP_UART3_CTS_L 7
39 CONN_AP_UART3_TXD	MAKE_BASE=TRUE	AP_UART3_TXD 7
39 CONN_AP_UART3_RXD	MAKE_BASE=TRUE	AP_UART3_RXD 7

BOOT CONFIG ID

37 15 12 9 7 6 =PP1V8_H3

NOSTUFF R0622 3.92K 1% 1/20W MF 201

BOARD ID <3> = BOOT_CONFIG[3] — 6 AP_GPIO29_BOARD_ID_3 — MAKE_BASE=TRUE — NC_BOARD_ID_3

BOARD ID <2> = BOOT_CONFIG[2] — 6 AP_GPIO28_BOARD_ID_2 — MAKE_BASE=TRUE — NC_BOARD_ID_2

BOARD ID <1> = BOOT_CONFIG[1] — 6 AP_GPIO25_BOARD_ID_1

BOARD ID <0> = BOOT_CONFIG[0] — CODEC_IRQ_N (GPIO18)

BOOT_CONFIG[3-0]

0010	SPI0 WITH TEST MODE
0000	SPI0 (DVT AND BEYOND)

6 BB_RST — MAKE_BASE=TRUE — BB_RST_RADIO 41

ALIASES FOR PAGE 57

42 PROX_SDA_3V0	MAKE_BASE=TRUE	I2C2_SDA_3V0 7 13 17 26 35 44
42 PROX_SCL_3V0	MAKE_BASE=TRUE	I2C2_SCL_3V0 7 13 17 26 35
42 PROX_ACSHIELD_CONN	MAKE_BASE=TRUE	PROX_ACSHIELD 42

BOARD REVISION

12 6 AP_GPIO41_BRD_REV2

6 AP_GPIO40_BRD_REV1

6 AP_GPIO39_BRD_REV0

NOSTUFF R0627 3.92K 1% 1/20W MF 201

NOSTUFF R0628 3.92K 1% 1/20W MF 201

R0629 3.92K 1% 1/20W MF 201

BRD_REV[2-0]

000	PROTO 3
001	EVT 1
010	EVT 2
011	DVT

NOTE: JTAG SCAN DUMP

JTAG_DAP

0 — R0663 — AP_JTAG_SEL 6

NOSTUFF R0661 0

6 RESET_1V8_N — AP_TRSTN 6 12

H3_A0_DAP R1203 0

6 JTAG_TRSTN_CTRL

6 AP_PT_DK_ADPTR — PORT_DK_ADPTR 16

6 AP_LD_DK_ADPTR — LAND_DK_ADPTR 16

JTAG_TAP R1200 0 5% 1/20W MF 201

6 NC_AP_TDO — MAKE_BASE=TRUE — 44 AP_TDO — DOCK2_C_Y 10 39 45

JTAG_TAP R1202 0 5% 1/20W MF 201

44 6 AP_TDI — DOCK2_Y_PR 10 39 45

JTAG_TAP R1201 0 5% 1/20W MF 201

12 6 AP_TRSTN — DOCK2_CVBS_PB 10 39 45

FOR REFERENCE

CURRENT SETTING ->

BOOT_CONFIG[3:0]

0000	SPI0
0001	SPI1
0010	SPI0 W/TEST
0011	SPI1 W/TEST
0100	FMI0 2CS
0101	FMI0 4CS
0110	FMI0 4CS W/TEST
0111	RESERVED
1000	FMI1 2 CS
1001	FMI1 4 CS
1010	FMI1 4CS W/TEST
1100	FMI0/1 2/2 CS
1101	FMI0/1 4/4 CS
1110	FMI0/1 4/4 CS W/TEST
1111	RESERVED

BOARD_ID[2:0]

010	K48AP
011	K48 DEV

BOARD_REV[2:0]

000	PROTO3

MLC

PART#	QTY	DESCRIPTION	REFERENCE DESIGNATOR(S)	CRITICAL	BOM OPTION
341S2604	1	MLC EEPROM 54MHZ LVDS,2MHZ SWI	U1401	CRITICAL	54MHZ_PANEL
341S2606	1	MLC EEPROM 100MHZ LVDS,2MHZ SWI	U1401	CRITICAL	100MHZ_PANEL

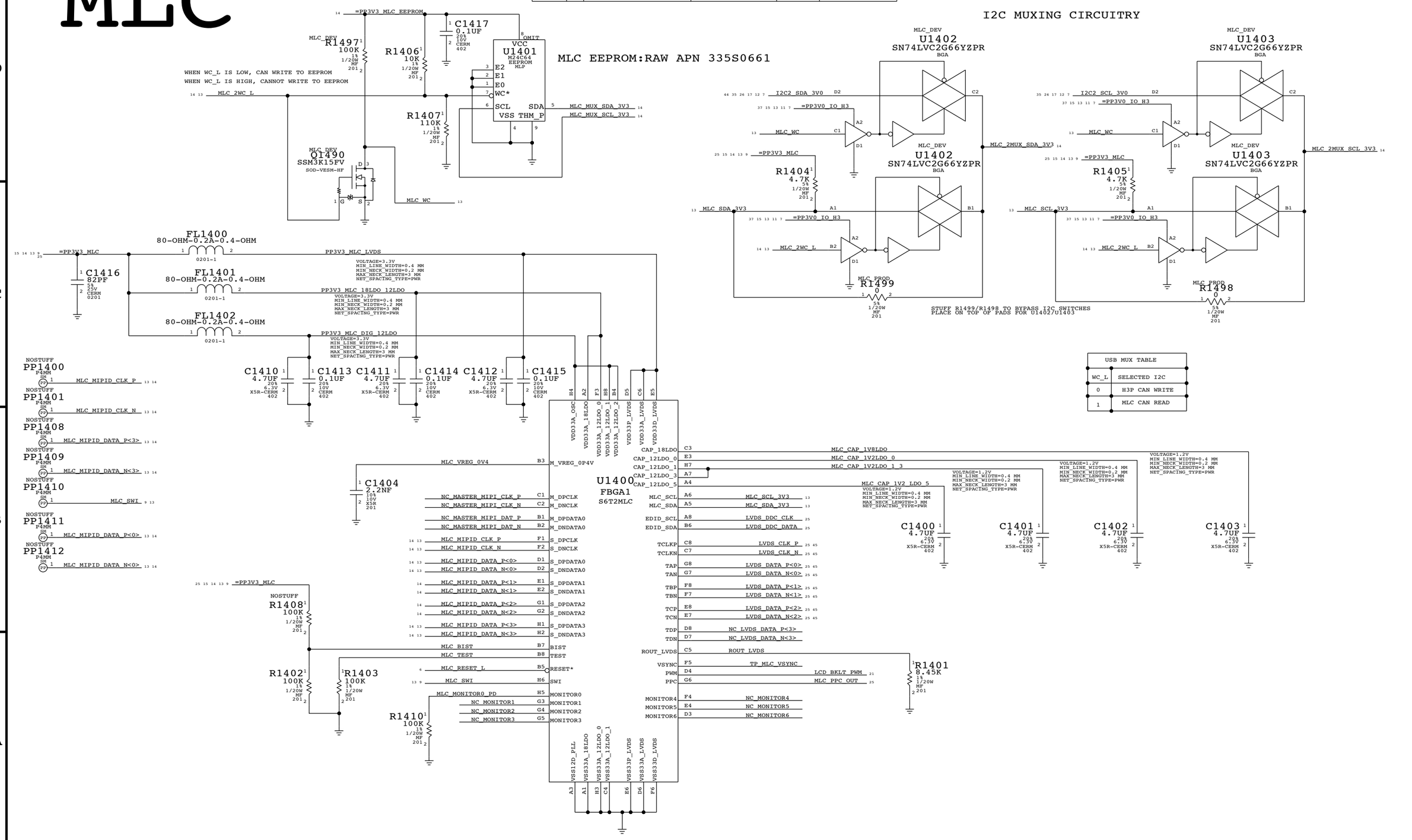

MLC ALIASES

45 9	H3_MIPID_CLK_P	MAKE_BASE=TRUE	MLC_MIPID_CLK_P	13
45 9	H3_MIPID_CLK_N	MAKE_BASE=TRUE	MLC_MIPID_CLK_N	13
45 9	H3_MIPID_DATA_P<0>	MAKE_BASE=TRUE	MLC_MIPID_DATA_P<0>	13
45 9	H3_MIPID_DATA_N<0>	MAKE_BASE=TRUE	MLC_MIPID_DATA_N<0>	13
45 9	H3_MIPID_DATA_P<1>	MAKE_BASE=TRUE	MLC_MIPID_DATA_P<1>	13
45 9	H3_MIPID_DATA_N<1>	MAKE_BASE=TRUE	MLC_MIPID_DATA_N<1>	13
45 9	H3_MIPID_DATA_P<2>	MAKE_BASE=TRUE	MLC_MIPID_DATA_P<2>	13
45 9	H3_MIPID_DATA_N<2>	MAKE_BASE=TRUE	MLC_MIPID_DATA_N<2>	13
45 9	H3_MIPID_DATA_P<3>	MAKE_BASE=TRUE	MLC_MIPID_DATA_P<3>	13
45 9	H3_MIPID_DATA_N<3>	MAKE_BASE=TRUE	MLC_MIPID_DATA_N<3>	13
13	MLC_MUX_SDA_3V3	MAKE_BASE=TRUE	MLC_2MUX_SDA_3V3	13
13	MLC_MUX_SCL_3V3	MAKE_BASE=TRUE	MLC_2MUX_SCL_3V3	13
13	MLC_2WC_L	MAKE_BASE=TRUE	MLC_WC_L	7
13	=PP3V3_MLC_EEPROM		=PP3V3_MLC	9 13 15 25

POWER CONN / ALIAS

LDO RAILS

PROGRAMMABLE ON/OFF

18 PP3V1_AUDIO — =PP3V1_AUDIO (28 30)
MAKE_BASE=TRUE
VOLTAGE=3.1V
MIN_LINE_WIDTH=0.6 mm
MIN_NECK_WIDTH=0.2 mm
NET_SPACING_TYPE=PWR
MAX_NECK_LENGTH=3 MM

18 PP3V0_GRAPE — =PP3V0_GRAPE (23 24)
MAKE_BASE=TRUE
VOLTAGE=3.0V
MIN_LINE_WIDTH=0.6 mm
MIN_NECK_WIDTH=0.2 mm
NET_SPACING_TYPE=PWR
MAX_NECK_LENGTH=3 MM
- =PP3V0_GRAPE_Z1 (24)
- =PP3V0_GRAPE_Z2 (24)
- =PP3V0_GRAPE_MARIO1 (23)
- =PP3V0_GRAPE_MARIO2
- =PP3V0_GRAPE_MARIO3

18 PP3V0_VIDEO — =PP3V0_VIDEO_BUFFER (10)
MAKE_BASE=TRUE
VOLTAGE=3.0V
MIN_LINE_WIDTH=0.6 mm
MIN_NECK_WIDTH=0.2 mm
NET_SPACING_TYPE=PWR
MAX_NECK_LENGTH=3 MM
- =PP3V0_VIDEO_H3 (10)
- =PP3V0_DPMUX (37)

18 PP3V0_OPTICAL — =PP3V0_OPTICAL (35)
MAKE_BASE=TRUE
VOLTAGE=3.0V
MIN_LINE_WIDTH=0.3 MM
MIN_NECK_WIDTH=0.2 mm
NET_SPACING_TYPE=PWR
MAX_NECK_LENGTH=3 MM

18 PP3V3_LAND_ACC — =PP3V3_LAND_ACC (38)
MAKE_BASE=TRUE
VOLTAGE=3.3V
MIN_LINE_WIDTH=0.2MM
MIN_NECK_WIDTH=0.1MM
NET_SPACING_TYPE=PWR
MAX_NECK_LENGTH=3 MM

18 PP3V3_PORT_ACC — =PP3V3_PORT_ACC (39)
MAKE_BASE=TRUE
VOLTAGE=3.3V
MIN_LINE_WIDTH=0.6 mm
MIN_NECK_WIDTH=0.2 mm
NET_SPACING_TYPE=PWR
MAX_NECK_LENGTH=3 MM

18 PP3V0_IO — =PP3V0_IO_SMS (26 42)
MAKE_BASE=TRUE
VOLTAGE=3.0V
MIN_LINE_WIDTH=0.6 MM
MIN_NECK_WIDTH=0.2 MM
NET_SPACING_TYPE=PWR
MAX_NECK_LENGTH=3 MM
- =PP3V0_IO_H3 (7 11 13 37)
- =PP3V0_IO_3V3 (20)
- =PP3V0_IO_CHGR (17)
- =PP3V0_IO_USB (6)

18 PP3V0_LCD — =PP3V0_LCD (21)
MAKE_BASE=TRUE
VOLTAGE=3.0V
MIN_LINE_WIDTH=0.3 MM
MIN_NECK_WIDTH=0.2 mm
NET_SPACING_TYPE=PWR
MAX_NECK_LENGTH=3 MM

18 PP1V2_AUDIENCE — =PP1V2_AUDIO
MAKE_BASE=TRUE
VOLTAGE=1.2V
MIN_LINE_WIDTH=0.5 MM
MIN_NECK_WIDTH=0.2 mm
NET_SPACING_TYPE=PWR
MAX_NECK_LENGTH=3 MM

18 PP3V0_HP_DET_BIAS — =PP3V0_HP_DET_BIAS (11 27 33 34 36 39)
MAKE_BASE=TRUE
VOLTAGE=3.0V
MIN_LINE_WIDTH=0.4MM
MIN_NECK_WIDTH=0.2MM
NET_SPACING_TYPE=PWR
MAX_NECK_LENGTH=3 MM

18 PP1V7_VA_VCP — =PP1V7_VA_VCP (28)
MAKE_BASE=TRUE
VOLTAGE=1.7V
MIN_LINE_WIDTH=0.6 mm
MIN_NECK_WIDTH=0.2 mm
NET_SPACING_TYPE=PWR
MAX_NECK_LENGTH=3 MM

18 PP1V2_H3 — =PP1V2_HSIC (6)
MAKE_BASE=TRUE
VOLTAGE=1.2V
MIN_LINE_WIDTH=0.6 MM
MIN_NECK_WIDTH=0.2 mm
NET_SPACING_TYPE=PWR
MAX_NECK_LENGTH=3 MM
- =PP1V2_VDDIOD_H3 (7)

18 PP1V1_H3_PHY — =PP1V1_SMIA (9)
MAKE_BASE=TRUE
VOLTAGE=1.1V
MIN_LINE_WIDTH=0.5 MM
MIN_NECK_WIDTH=0.2 mm
NET_SPACING_TYPE=PWR
MAX_NECK_LENGTH=3 MM
- =PP1V1_PLL (6)
- =PP1V1_MIPI (9)
- =PP1V1_MIPI_PLL (9)
- =PP1V1_DPORT (9)
- =PP1V1_HSIC (6)
- =PP1V1_USB (6)

18 PP1V8_ALWAYS — =PP1V8_ALWAYS (6 19)
MAKE_BASE=TRUE
VOLTAGE=1.8V
MIN_LINE_WIDTH=0.2 MM
MIN_NECK_WIDTH=0.1 MM
NET_SPACING_TYPE=PWR
MAX_NECK_LENGTH=3 MM

18 PP1V2_SDRAM — =PP1V2_SDRAM_MDDR (7 8)
MAKE_BASE=TRUE
VOLTAGE=1.2V
MIN_LINE_WIDTH=0.6 MM
MIN_NECK_WIDTH=0.2 MM
NET_SPACING_TYPE=PWR
MAX_NECK_LENGTH=3 MM

BUCK RAILS

18 PPVCORE_H3 — =PPVCORE_H3 (7)
MAKE_BASE=TRUE
VOLTAGE=1.2V
MIN_LINE_WIDTH=0.6 MM
MIN_NECK_WIDTH=0.25 MM
NET_SPACING_TYPE=PWR
MAX_NECK_LENGTH=3 MM

18 PP1V8_SDRAM — =PP1V8_SDRAM_H3 (6 8)
MAKE_BASE=TRUE
VOLTAGE=1.8V
MIN_LINE_WIDTH=0.6 mm
MIN_NECK_WIDTH=0.2 mm
NET_SPACING_TYPE=PWR
MAX_NECK_LENGTH=3 MM
- =PP1V8_SDRAM_WL (39)
- =PP1V8_SDRAM_MISC (11 36)
- =PP1V8_SDRAM_1V2 (18)
- =PP1V8_SDRAM_GPS (41)

18 PP1V8_GRAPE — =PP1V8_GRAPE (23)
MAKE_BASE=TRUE
VOLTAGE=1.8V
MIN_LINE_WIDTH=0.3 MM
MIN_NECK_WIDTH=0.2 mm
NET_SPACING_TYPE=PWR
MAX_NECK_LENGTH=3 MM

19 18 PP1V8 — =PP1V8_CAM
MAKE_BASE=TRUE
VOLTAGE=1.8V
MIN_LINE_WIDTH=0.6 mm
MIN_NECK_WIDTH=0.2 mm
NET_SPACING_TYPE=PWR
MAX_NECK_LENGTH=3 MM
- =PP1V8_SMS (26 42)
- =PP1V8_CHGR (17)
- =PP1V8_AUDIO (28)
- =PP1V8_H3 (6 7 9 12 37)
- =PP1V8_NOR_FLASH (7)
- =PP1V8_SMIA (9)
- =PP1V8_MIPI (9)

21 PPLED_OUT — =PPLED_REG (25)
MAKE_BASE=TRUE
VOLTAGE=20.4V
MIN_LINE_WIDTH=0.6 MM NET_SPACING_TYPE=PWR
MIN_NECK_WIDTH=0.2 MM MAX_NECK_LENGTH=3 MM

18 PP5V1_OUT — =PP5V1_LED (21)
MAKE_BASE=TRUE
VOLTAGE=5.1V
MIN_LINE_WIDTH=0.4 MM
MIN_NECK_WIDTH=0.2 mm
NET_SPACING_TYPE=PWR
MAX_NECK_LENGTH=3 MM

20 PP3V3_OUT — =PP3V3_LCD (25)
MAKE_BASE=TRUE
VOLTAGE=3.3V
MIN_LINE_WIDTH=0.6 mm
MIN_NECK_WIDTH=0.2 mm
NET_SPACING_TYPE=PWR
MAX_NECK_LENGTH=3 MM
- =PP3V3_NAND (7 8 43)
- =PP3V3_H3_USB (6)
- =PP3V3_AUDIO (28)

20 PP3V3_MLC_OUT — =PP3V3_MLC (9 13 14 25)
MAKE_BASE=TRUE
VOLTAGE=3.3V
MIN_LINE_WIDTH=0.4 MM
MIN_NECK_WIDTH=0.2 MM
NET_SPACING_TYPE=PWR
MAX_NECK_LENGTH=3 MM

GND
MAKE_BASE=TRUE
VOLTAGE=0V
MIN_LINE_WIDTH=0.6 MM
MIN_NECK_WIDTH=0.20MM
NET_SPACING_TYPE=GND
MAX_NECK_LENGTH=5 MM

CHARGER MAIN

17 PPVCC_MAIN
MAKE_BASE=TRUE
VOLTAGE=4.7V
MIN_LINE_WIDTH=0.6MM
MIN_NECK_WIDTH=0.2MM
NET_SPACING_TYPE=PWR
MAX_NECK_LENGTH=3 MM
- =VCC_MAIN_3V3 (20)
- =VCC_MAIN_LED (21)
- =VCC_MAIN_AUDIO (22 29)
- =VCC_MAIN_WL (39)
- =VCC_MAIN_DOCK (38 39)
- =VCC_MAIN_ASH (18)

BATTERY

17 15 BATT_POS_F — =BATT_POS_F_3G (41)
MAKE_BASE=TRUE
VOLTAGE=4.2V
MIN_LINE_WIDTH=0.6 MM
MIN_NECK_WIDTH=0.25 MM
NET_SPACING_TYPE=PWR
MAX_NECK_LENGTH=3 MM

(REPLACE WITH 155S0243 IF NEED FILTER)

R1940
0
5%
1/4W
PF-LF
1206

17 BATT_POS — 1 — 2 — BATT_POS_F (15 17)

DCIN POWER PATH

SO-8 DUAL P/N FETS

MOSFET	SI4563DY
CHANNEL	N-TYPE
RDS(ON)	15 MOHM @4.5V
IMAX	8 A
VGS MAX	+/- 16V

SO-8 DUAL P/N FETS

MOSFET	SI4563DY
CHANNEL	P-TYPE
RDS(ON)	25 MOHM @-4.5V
IMAX	8 A
VGS MAX	+/- 16V

LANDSCAPE

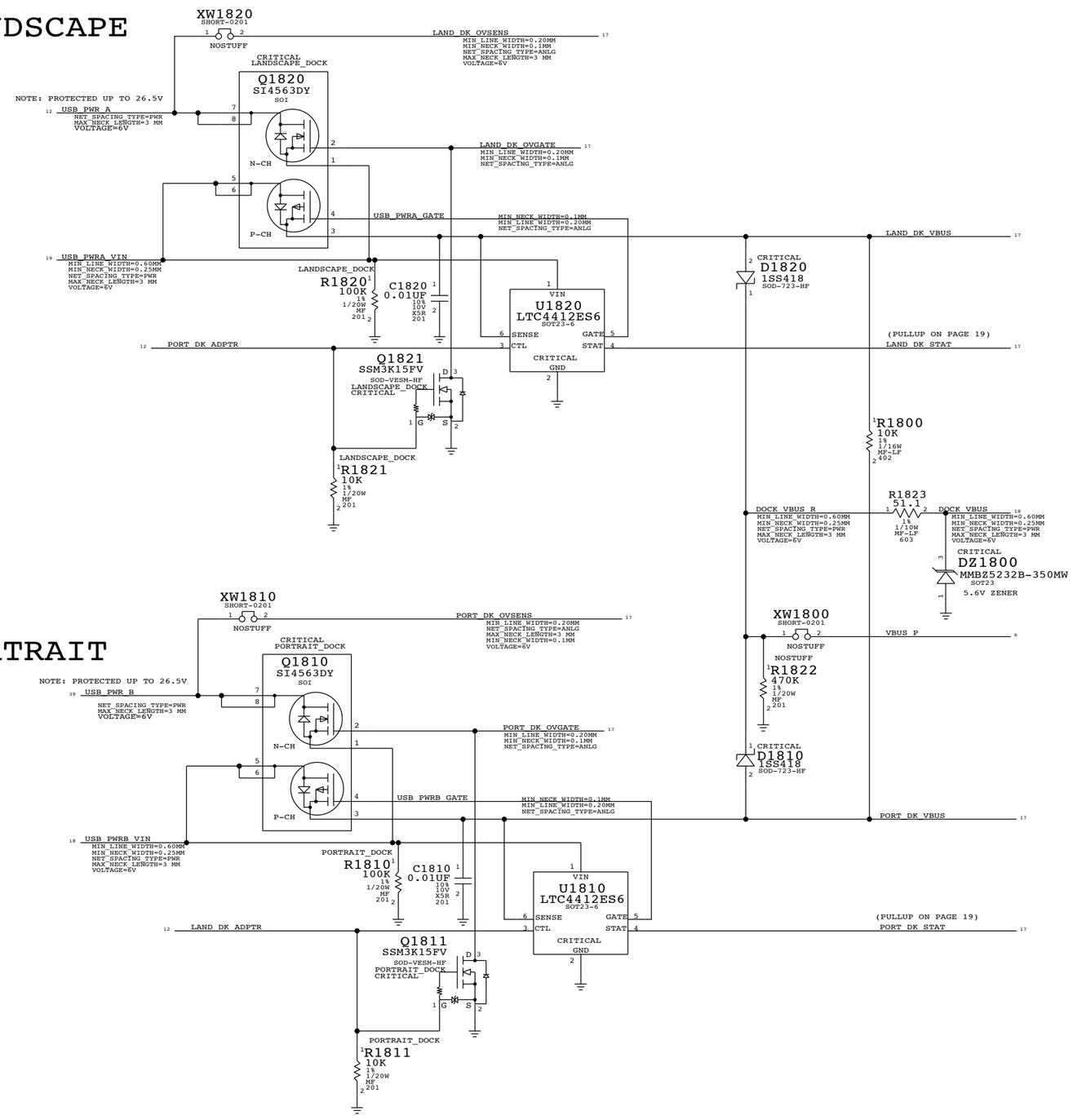

PORTRAIT

MAIN SUPPLY/BATTERY CHARGER

PART NUMBER	QTY	DESCRIPTION	REFERENCE DES	CRITICAL	BOM OPTION
110S0550	1	RES,FF,0 OHM,1/10W,0603,5%SMD,LF,0.020	F1900	CRITICAL	

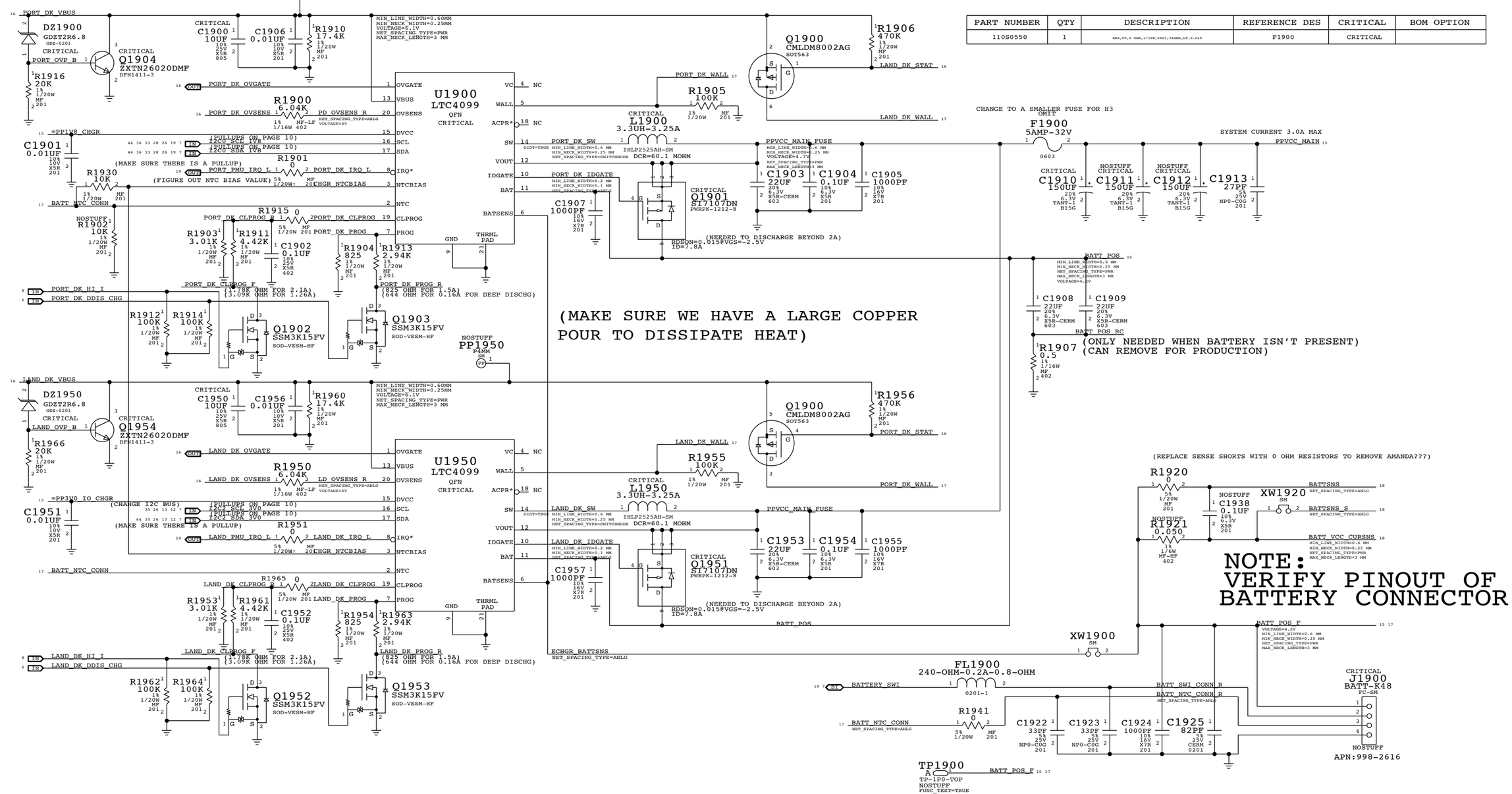

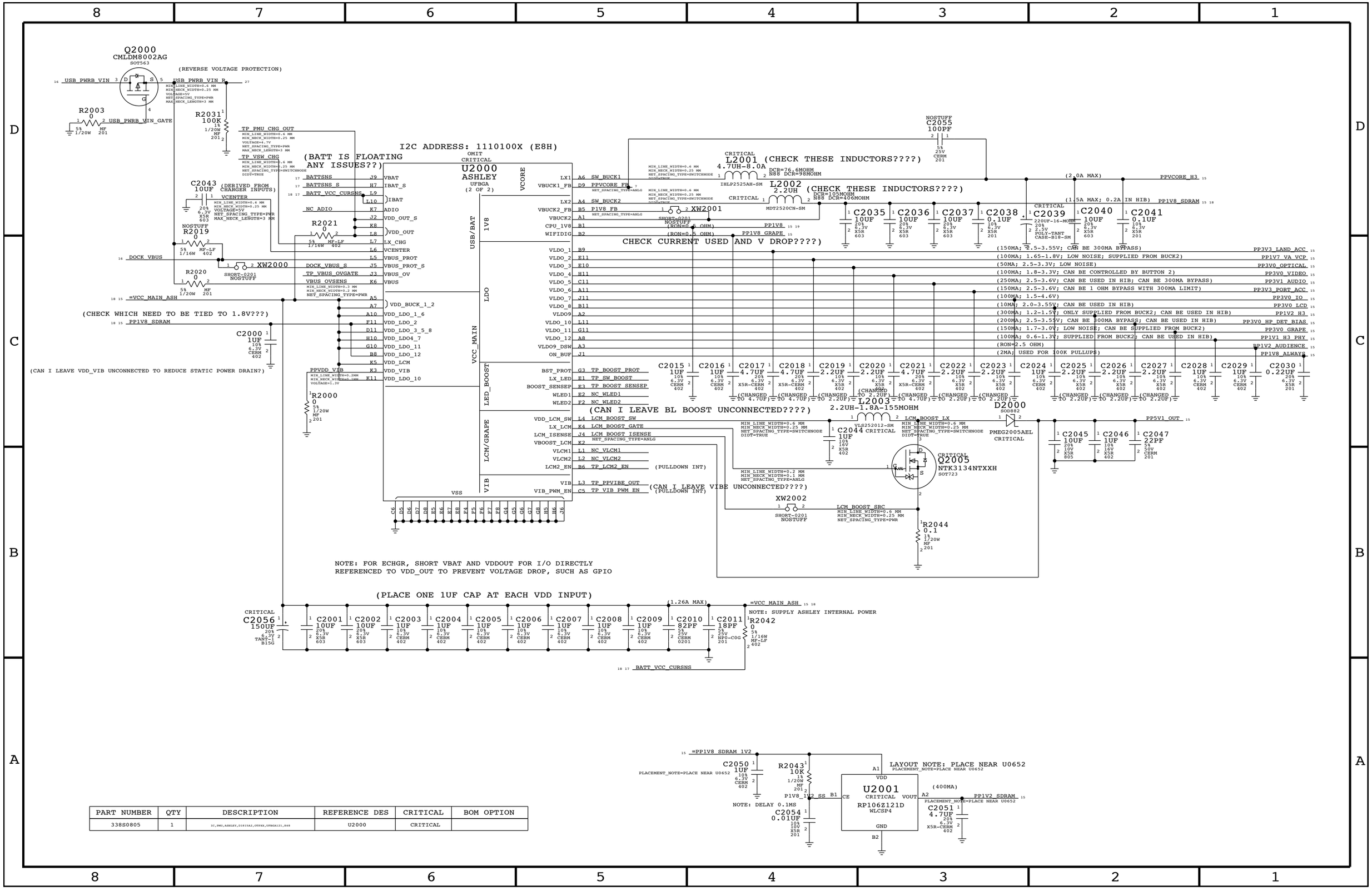

PART NUMBER	QTY	DESCRIPTION	REFERENCE DES	CRITICAL	BOM OPTION
338S0805	1	IC,PMU,ASHLEY,D1815A2,UFBGA121,K48	U2000	CRITICAL	

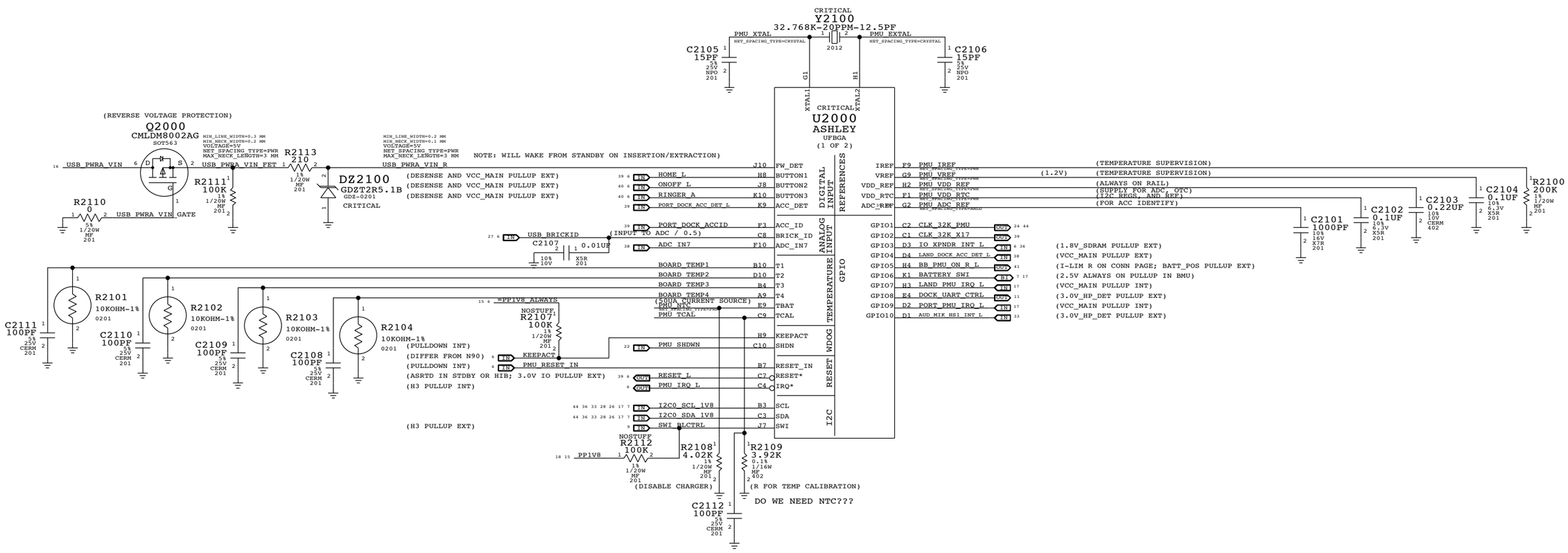
CRITICAL
Y2100
32.768K-20PPM-12.5PF
PMU_XTAL
PMU_EXTAL
C2105
15PF
C2106
15PF
CRITICAL
U2000
ASHLEY
UFBGA
(1 OF 2)
XTAL1
XTAL2
(REVERSE VOLTAGE PROTECTION)
Q2000
CMLDM8002AG
SOT563
USB_PWRA_VIN
USB_PWRA_VIN_FET
USB_PWRA_VIN_GATE
R2110
R2111
100K
R2113
210
DZ2100
GDZT2R5.1B
GDZ-0201
CRITICAL
USB_PWRA_VIN_R
NOTE: WILL WAKE FROM STANDBY ON INSERTION/EXTRACTION)
(DESENSE AND VCC_MAIN PULLUP EXT)
(DESENSE AND VCC_MAIN PULLUP EXT)
(DESENSE AND VCC_MAIN PULLUP EXT)
HOME_L
ONOFF_L
RINGER_A
PORT_DOCK_ACC_DET_L
PORT_DOCK_ACCID
(INPUT TO ADC / 0.5)
ADC_IN7
USB_BRICKID
C2107
0.01UF
BOARD_TEMP1
BOARD_TEMP2
BOARD_TEMP3
BOARD_TEMP4
(50UA CURRENT SOURCE)
PMU_NTC
PMU_TCAL
=PP1V8_ALWAYS
NOSTUFF
R2107
100K
KEEPACT
PMU_SHDWN
PMU_RESET_IN
RESET_L
PMU_IRQ_L
I2C0_SCL_1V8
I2C0_SDA_1V8
SWI_BLCTRL
(PULLDOWN INT)
(DIFFER FROM N90)
(PULLDOWN INT)
(ASRTD IN STDBY OR HIB; 3.0V IO PULLUP EXT)
(H3 PULLUP INT)
(H3 PULLUP EXT)
R2101
10KOHM-1%
R2102
10KOHM-1%
R2103
10KOHM-1%
R2104
10KOHM-1%
C2111
100PF
C2110
100PF
C2109
100PF
C2108
100PF
NOSTUFF
R2112
100K
PP1V8
(DISABLE CHARGER)
R2108
4.02K
R2109
3.92K
(R FOR TEMP CALIBRATION)
DO WE NEED NTC???
C2112
100PF
DIGITAL INPUT
REFERENCES
ANALOG INPUT
GPIO
TEMPERATURE
WDOG
RESET
I2C
FW_DET
BUTTON1
BUTTON2
BUTTON3
ACC_DET
ACC_ID
BRICK_ID
ADC_IN7
T1
T2
T3
T4
TBAT
TCAL
KEEPACT
SHDN
RESET_IN
RESET*
IRQ*
SCL
SDA
SWI
PMU_IREF
PMU_VREF
PMU_VDD_REF
PMU_VDD_RTC
PMU_ADC_REF
(1.2V)
(TEMPERATURE SUPERVISION)
(TEMPERATURE SUPERVISION)
(ALWAYS ON RAIL)
(SUPPLY FOR ADC, OTC)
(I2C REGS, AND REF)
(FOR ACC IDENTIFY)
C2101
1000PF
C2102
0.1UF
C2103
0.22UF
C2104
0.1UF
R2100
200K
CLK_32K_PMU
CLK_32K_X17
IO_XPNDR_INT_L
LAND_DOCK_ACC_DET_L
BB_PMU_ON_R_L
BATTERY_SWI
LAND_PMU_IRQ_L
DOCK_UART_CTRL
PORT_PMU_IRQ_L
AUD_MIK_HS1_INT_L
(1.8V_SDRAM PULLUP EXT)
(VCC_MAIN PULLUP EXT)
(I-LIM R ON CONN PAGE; BATT_POS PULLUP EXT)
(2.5V ALWAYS ON PULLUP IN BMU)
(VCC_MAIN PULLUP INT)
(3.0V_HP_DET PULLUP EXT)
(VCC_MAIN PULLUP INT)
(3.0V_HP_DET PULLUP EXT)

3.3V SUPPLY

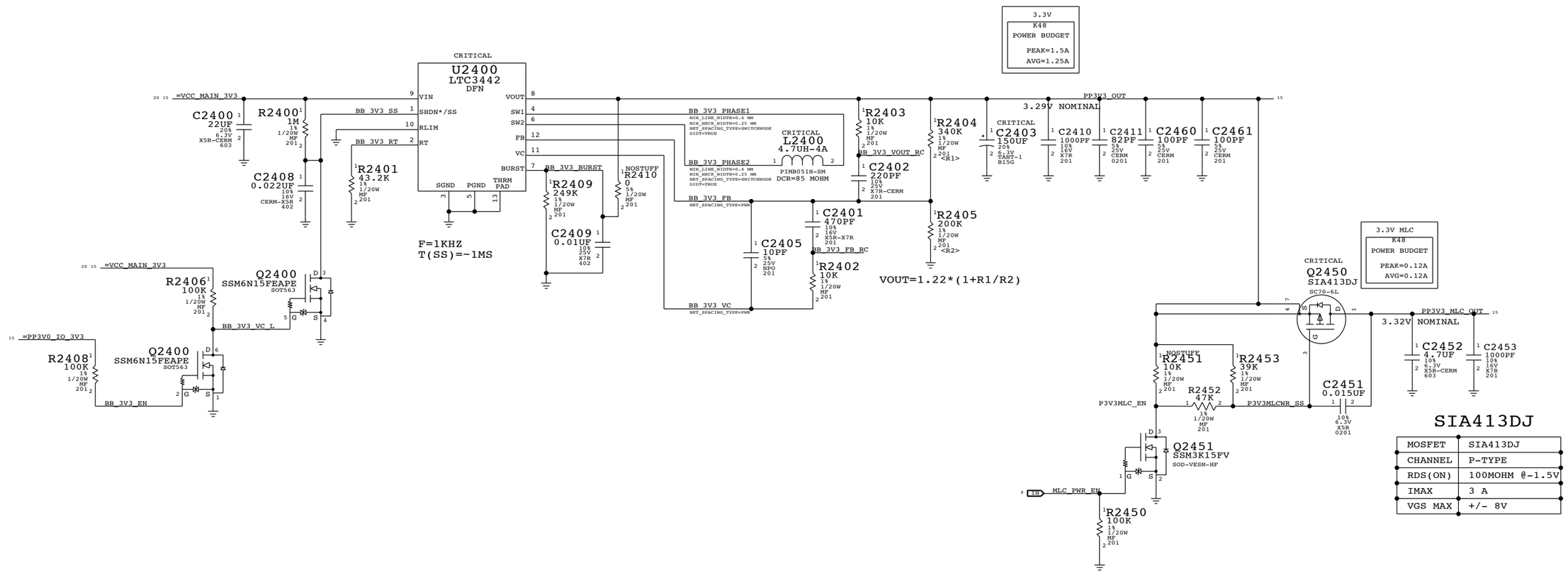

SIA413DJ

MOSFET	SIA413DJ
CHANNEL	P-TYPE
RDS(ON)	100MOHM @-1.5V
IMAX	3 A
VGS MAX	+/- 8V

LED BOOST/BACKLIGHT CONTROLLER

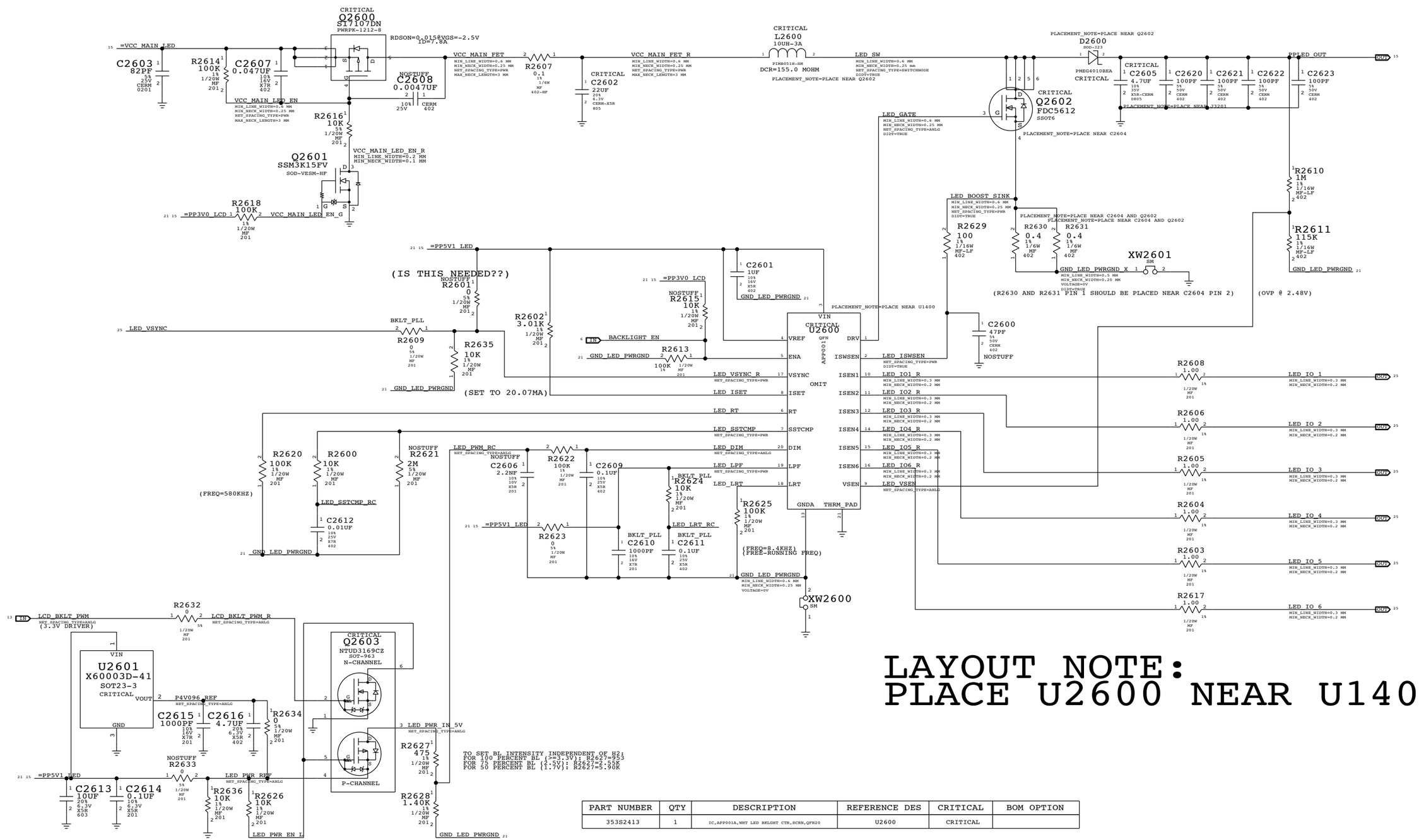

PART NUMBER	QTY	DESCRIPTION	REFERENCE DES	CRITICAL	BOM OPTION
353S2413	1	IC,APF001A,WHT LED BKLGHT CTR,SCRN,QFN20	U2600	CRITICAL	

LAYOUT NOTE:
PLACE U2600 NEAR U1400

DEBUG RESET ACCESS

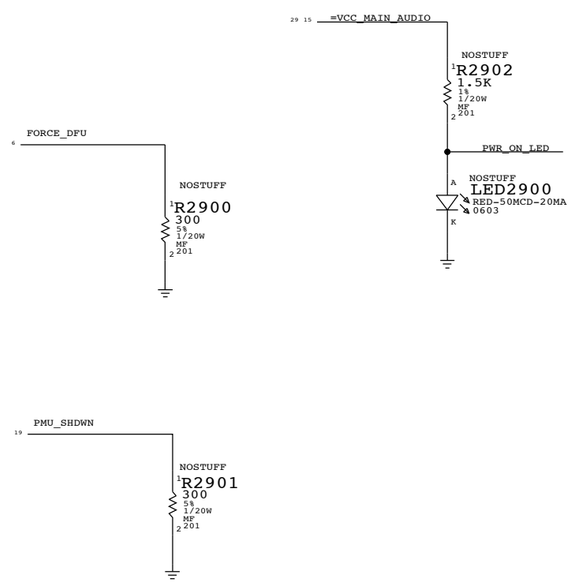

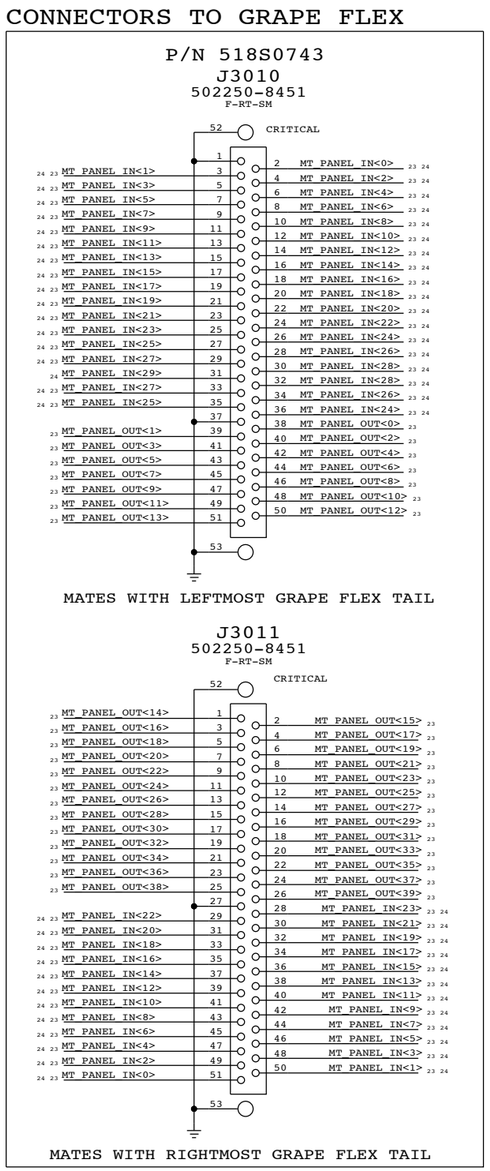

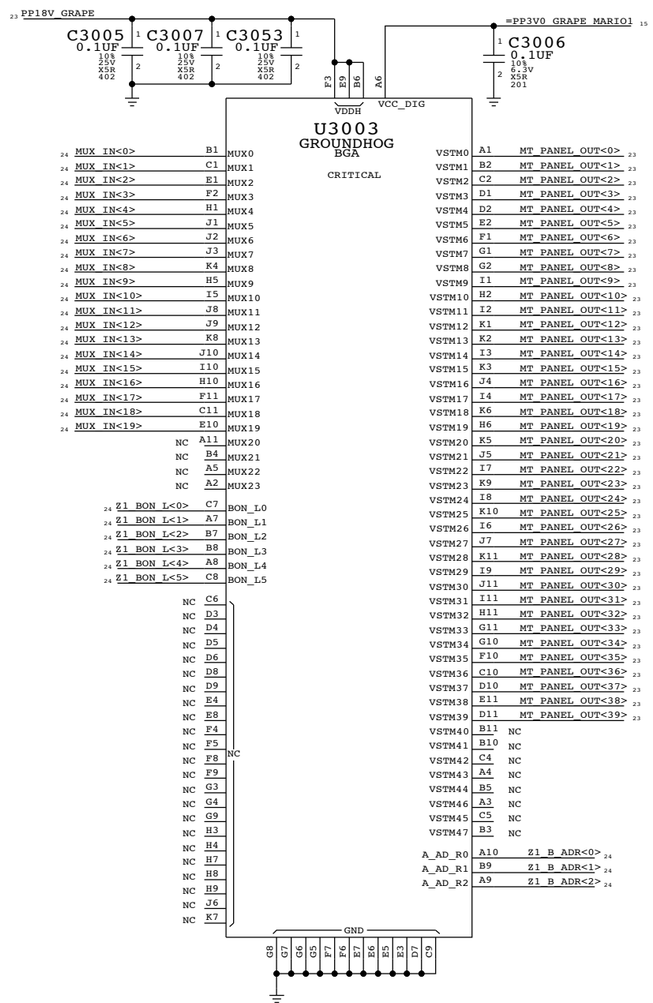

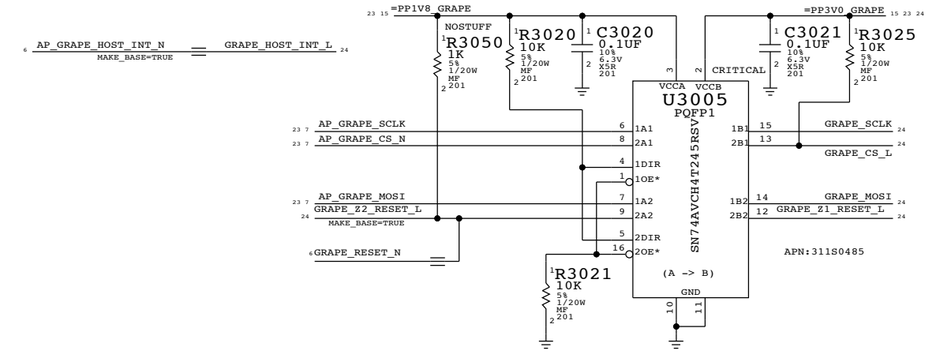

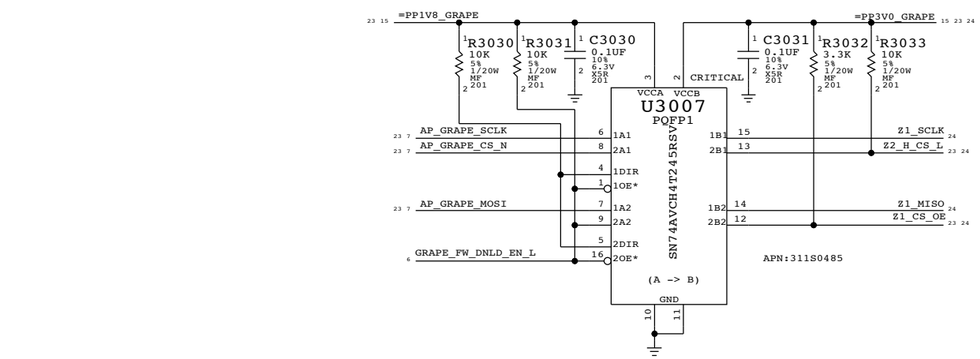

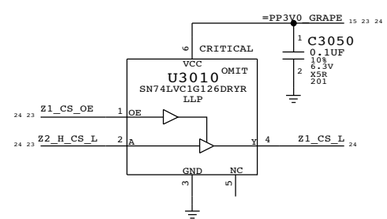

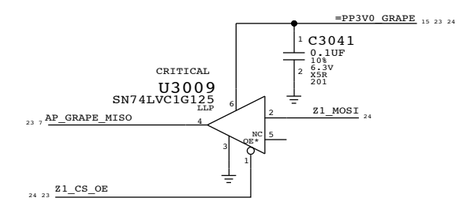

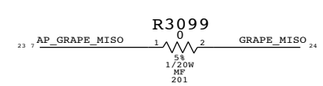

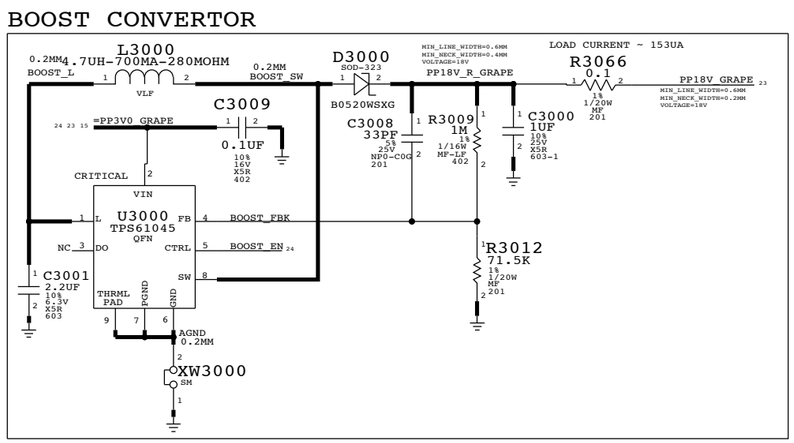

PART NUMBER	QTY	DESCRIPTION	REFERENCE DES	CRITICAL	BOM OPTION
311S0506	1	IC,SNGL 3-STATE BUFFER,5-PIN,DRY	U3010	CRITICAL	

ARM9 MCU (Z2 BASED)

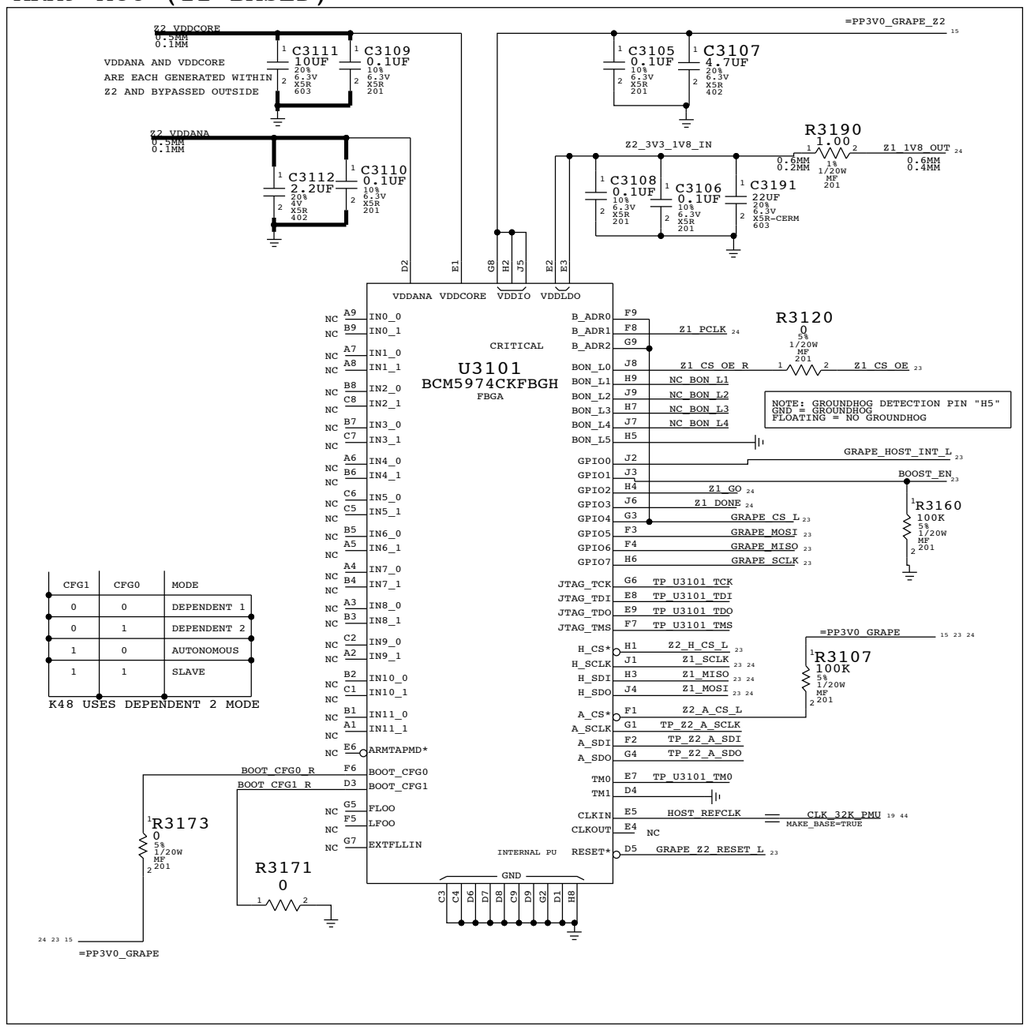

CFG1	CFG0	MODE
0	0	DEPENDENT 1
0	1	DEPENDENT 2
1	0	AUTONOMOUS
1	1	SLAVE

K48 USES DEPENDENT 2 MODE

ZEPHYR 1+ ASIC

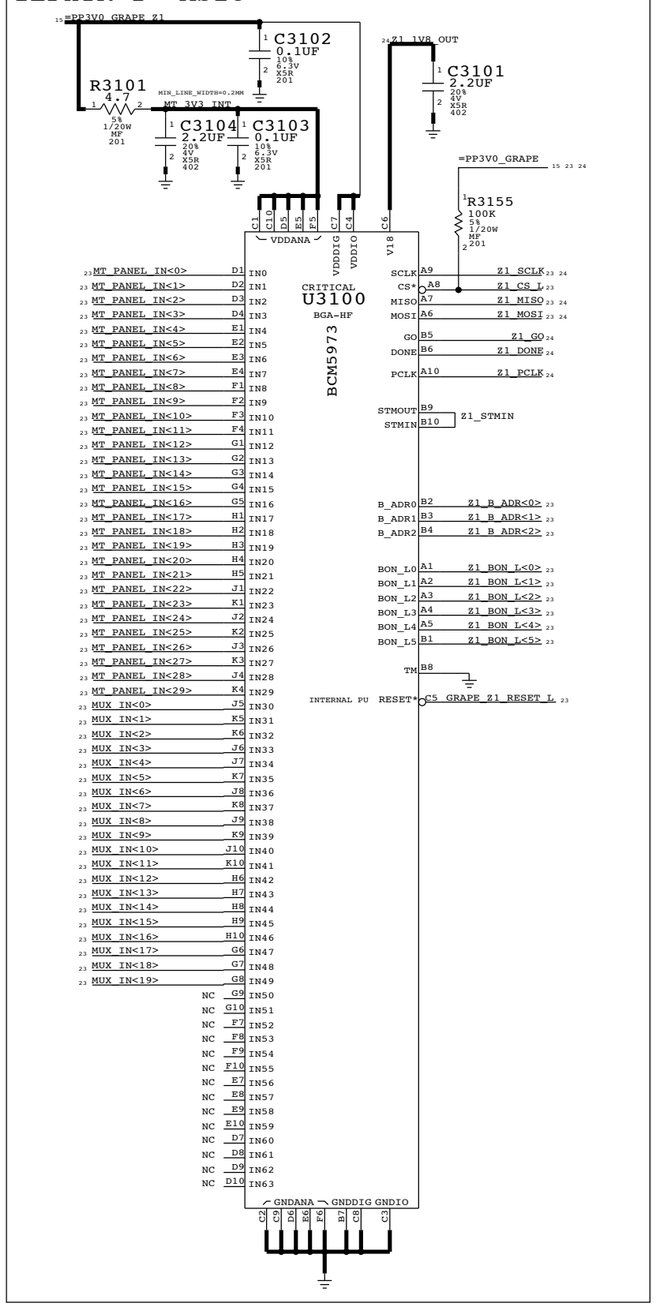

LVDS CONNECTOR

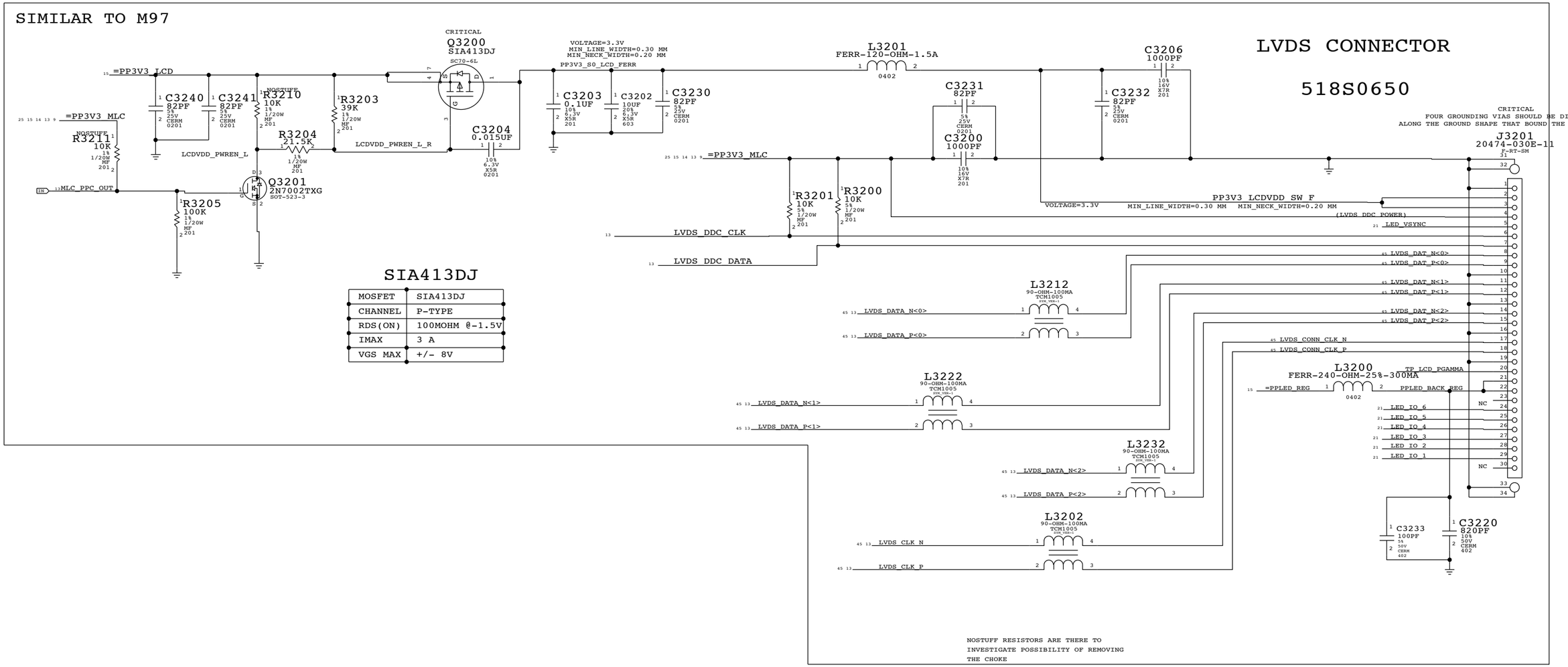

SIA413DJ

MOSFET	SIA413DJ
CHANNEL	P-TYPE
RDS(ON)	100MOHM @-1.5V
IMAX	3 A
VGS MAX	+/- 8V

MOTION/GYRO/COMPASS SENSORS

ST MICRO LIS331DLHF MOTION SENSOR

12-BIT PART

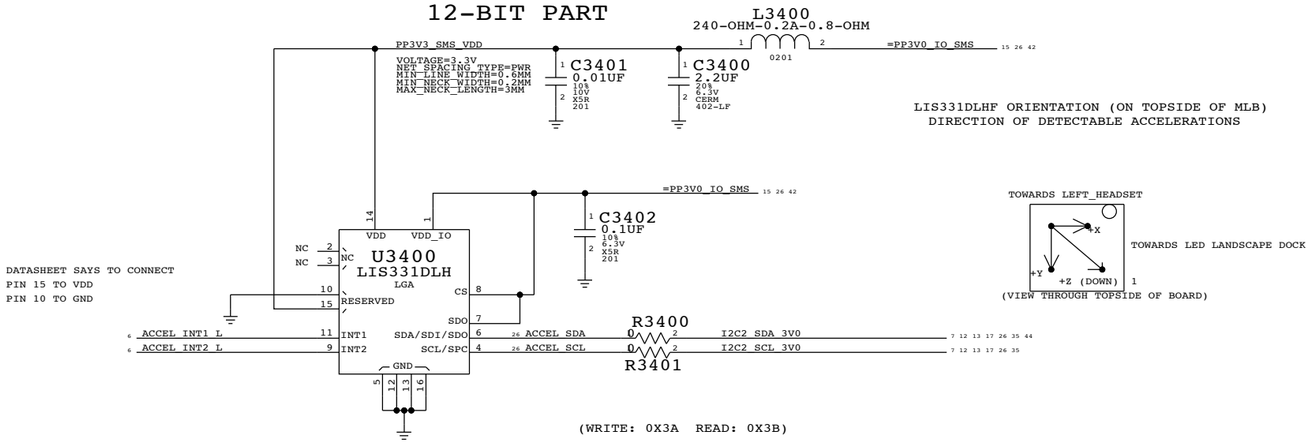

LIS331DLHF ORIENTATION (ON TOPSIDE OF MLB)
DIRECTION OF DETECTABLE ACCELERATIONS

COMPASS HIGH

(HAS THERMAL SENSOR IN IT)
I2C ADDR: 0011110
WRITE: 0X3C READ: 0X3D

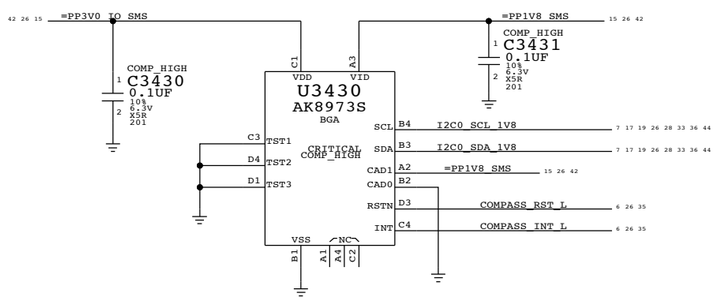

MUST STUFF ONLY ONE AS THEY ARE THE SAME ADDRESS

COMPASS LOW

(HAS THERMAL SENSOR IN IT)
I2C ADDR: 0011110
WRITE: 0X3C READ: 0X3D

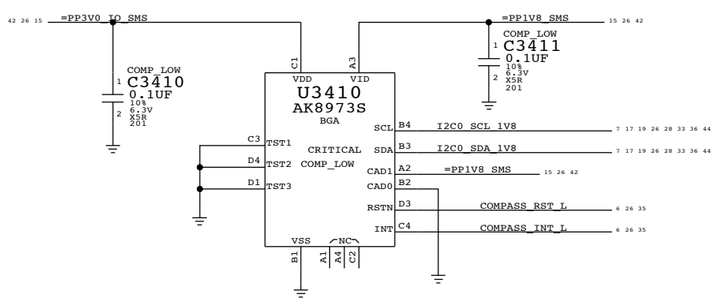

GYRO

(WRITE: 0XD0 READ: 0XD1)
I2C ADDRESS: 1101000

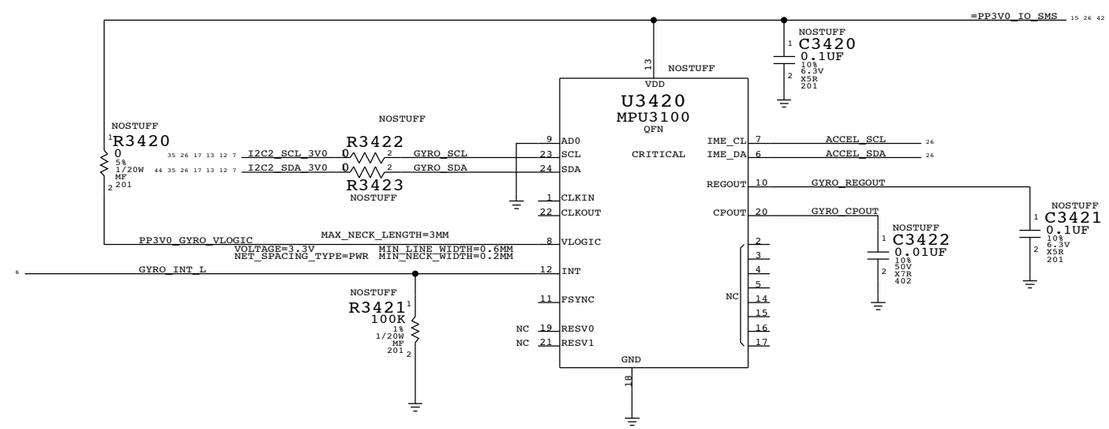

USB MUX/BRICK DETECTION

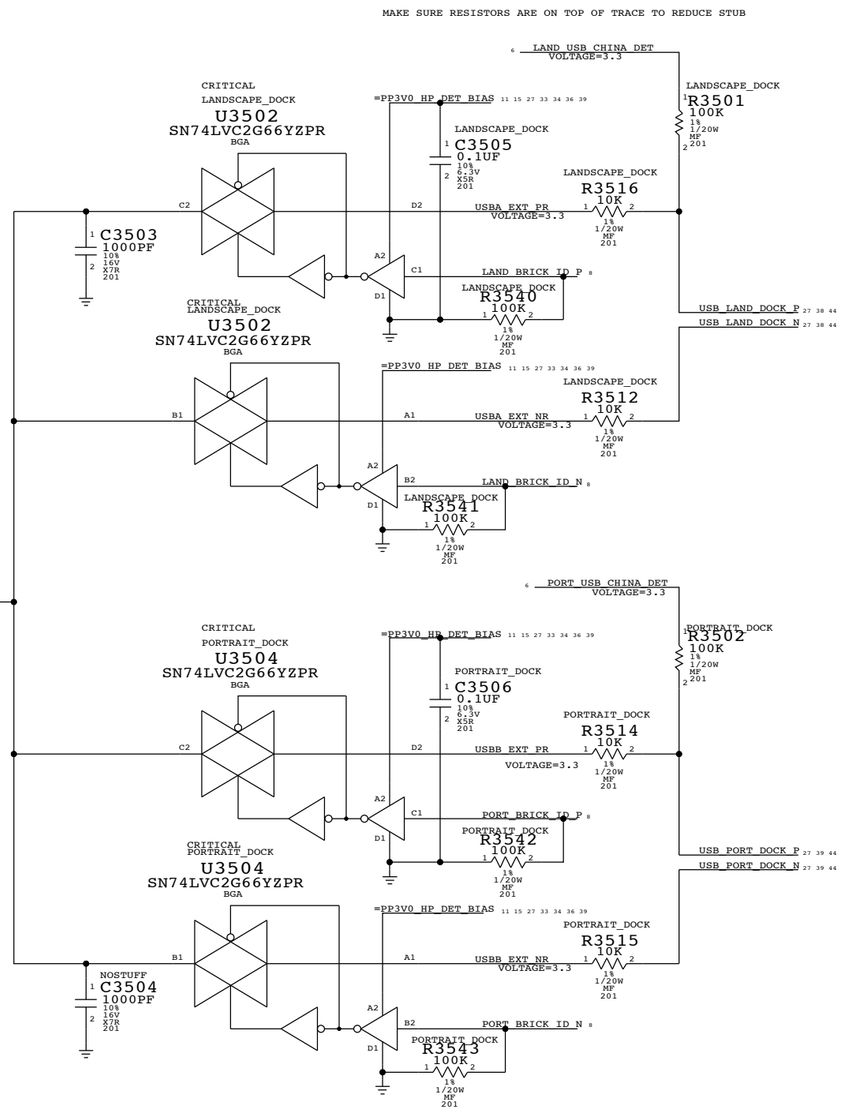

USB MUX FOR DOCK USB

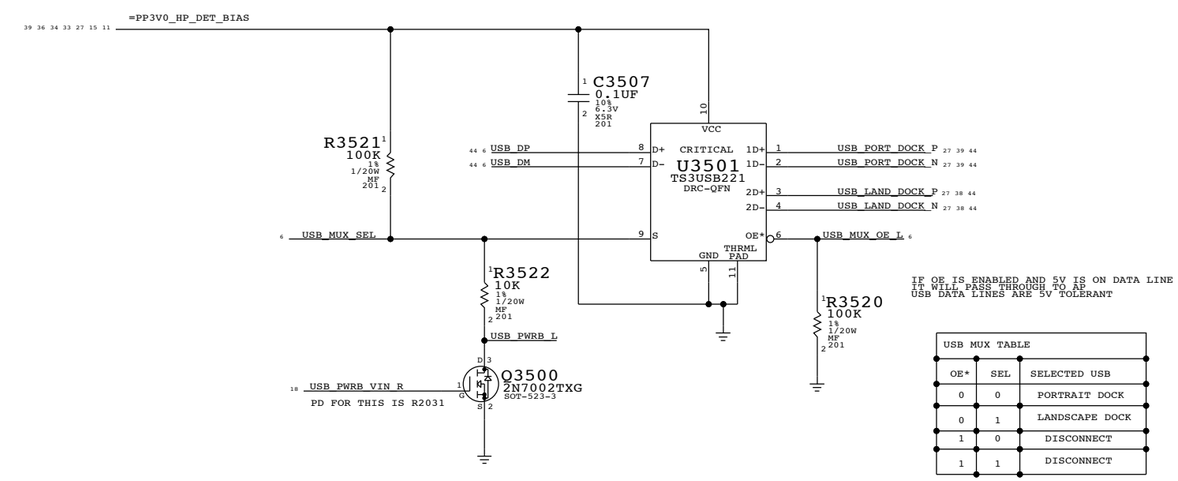

USB MUX TABLE

OE*	SEL	SELECTED USB
0	0	PORTRAIT DOCK
0	1	LANDSCAPE DOCK
1	0	DISCONNECT
1	1	DISCONNECT

L61 AUDIO CODEC

APN:338S0589

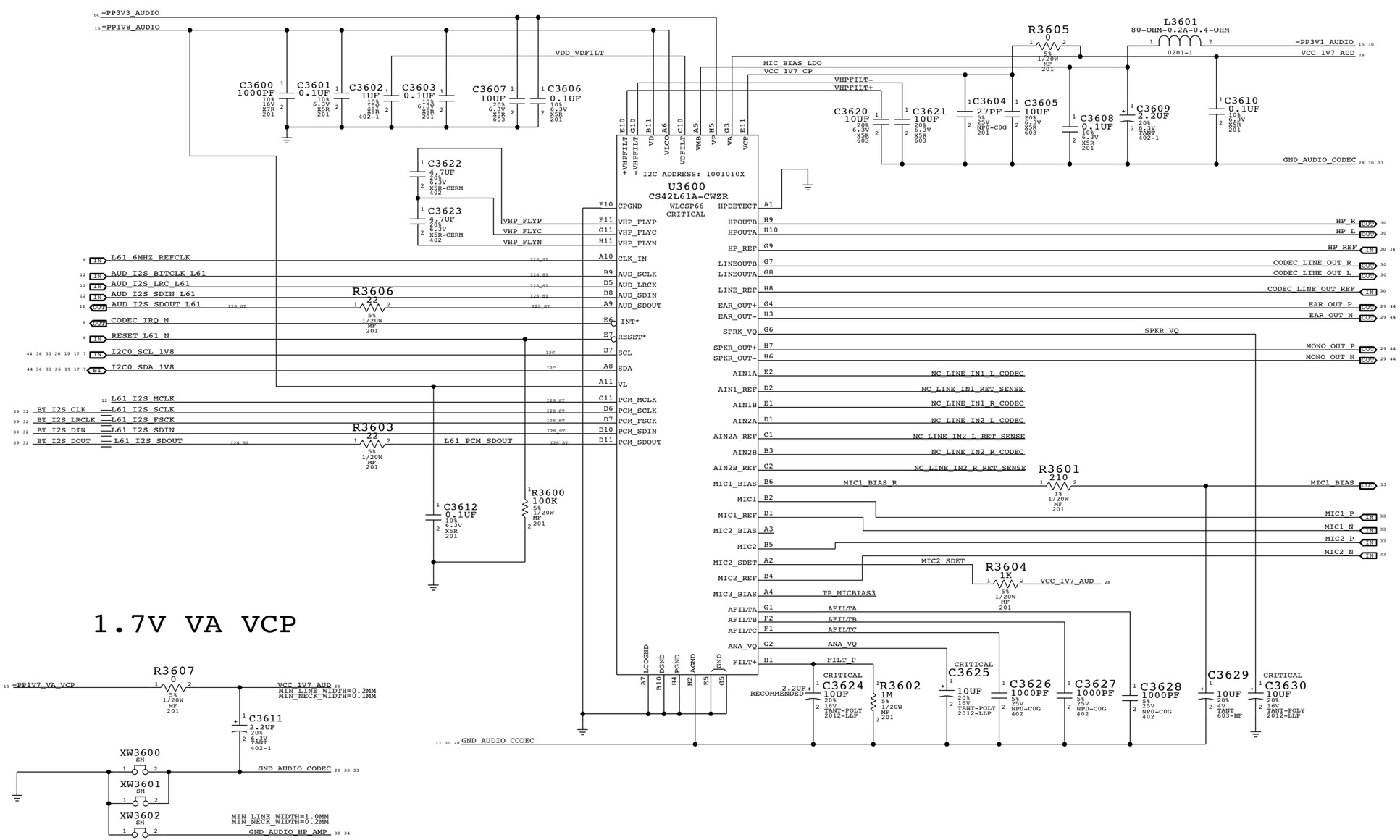

1.7V VA VCP

SPEAKER AMPLIFIER

SSM2319 APN:353S2136

GAIN = 12DB TURN ON TIME: 28MS

80HZ +/- XXX% TURN ON DELAY: 50MS

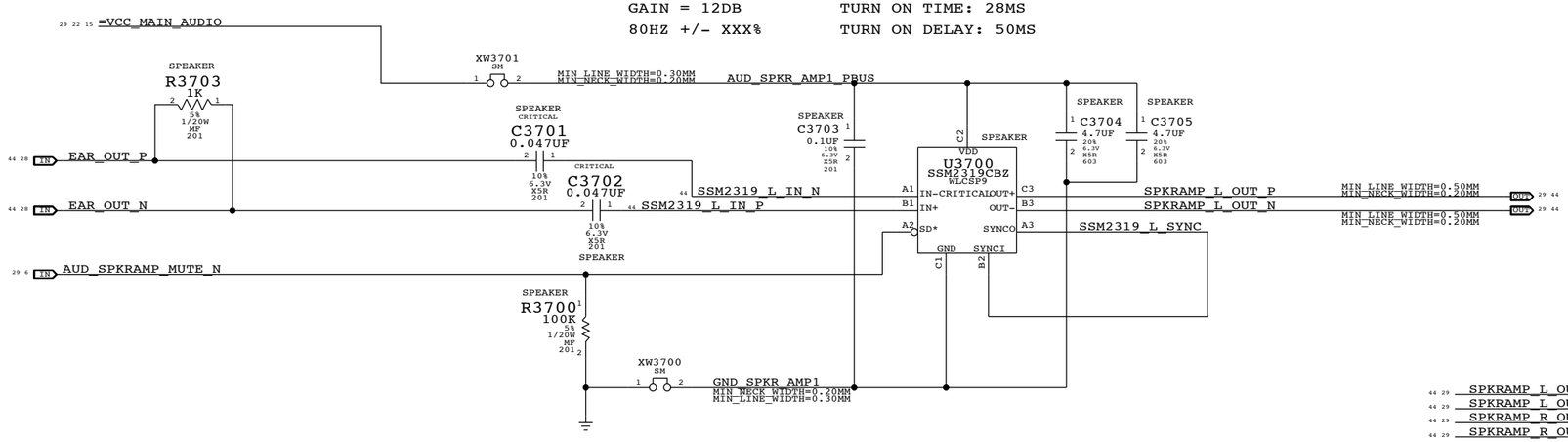

SPEAKER CONNECTOR
APN 518S0521

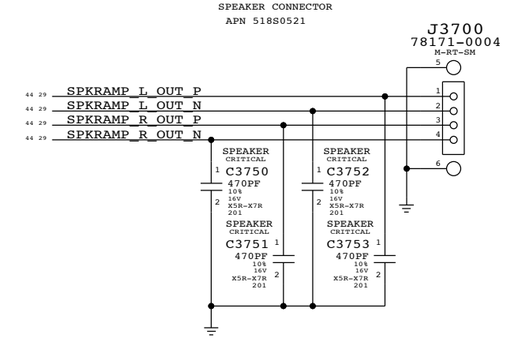

L61 RECEIVER OUTPUT IS CONNECTED TO U3700
L61 SPEAKER OUTPUT IS CONNECTED TO U3710

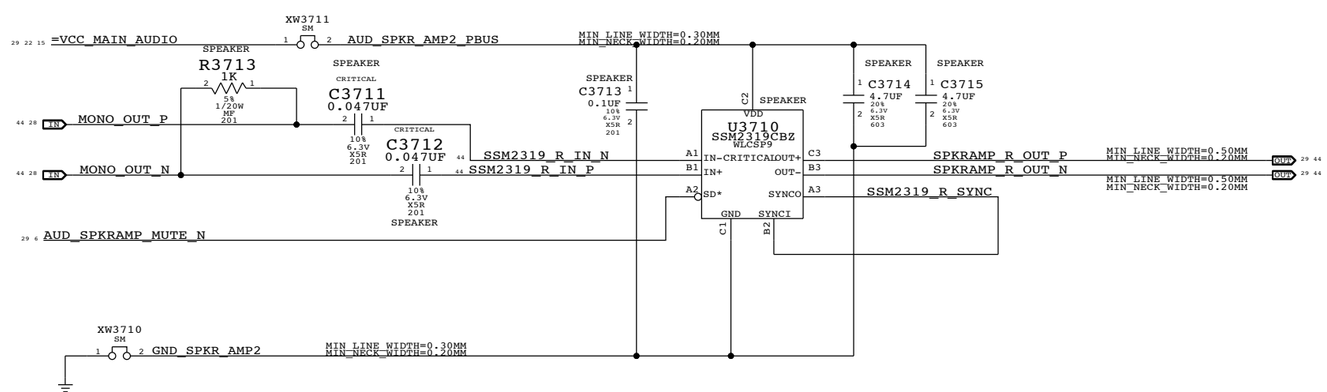

HEADPHONE OUTPUT ZOBEL NETWORK

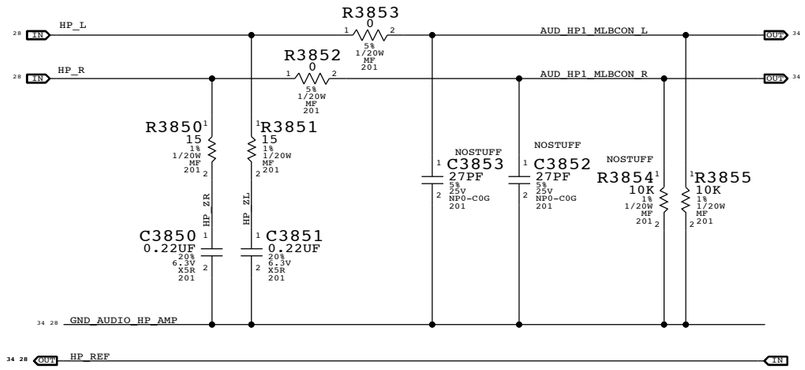

LINE OUTPUT REF SENSE DOCK SELECTOR

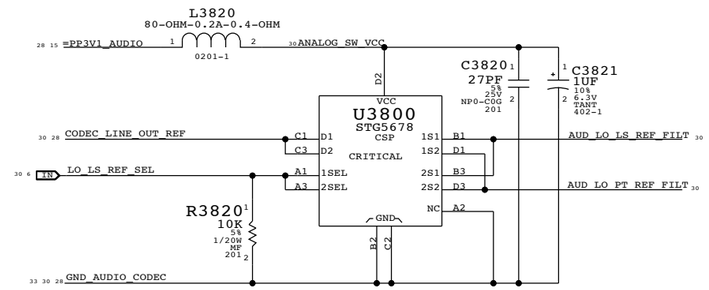

OUTPUT REF SENSE LINE SHOULD BE SWITCHED TO ACTIVE PORT

LO_LS_REF_SEL = 0: PORTRAIT DOCK SELECTED
LO_LS_REF_SEL = 1: LANDSCAPE DOCK SELECTED

LINE OUTPUT DOCK SELECTOR

LO_LS_REF_SEL = 0: DAC OUTPUT CONNECTED TO PORTRAIT DOCK
LO_LS_REF_SEL = 1: DAC OUTPUT CONNECTED TO LANDSCAPE DOCK

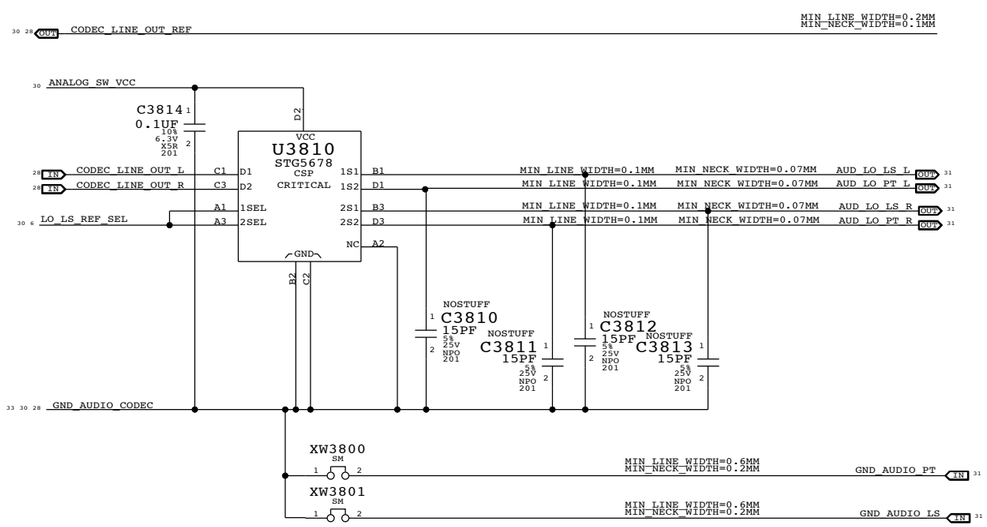

LINE OUTPUT REF SENSE FILTER

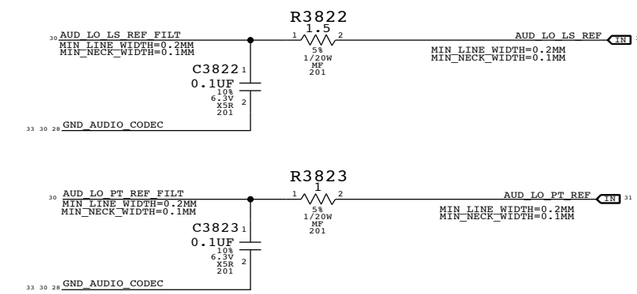

DOCKS OUTPUTS

NOTE:PORTRAIT DOCK IS PRIMARY DOCK

PORTRAIT DOCK LINE OUTPUT

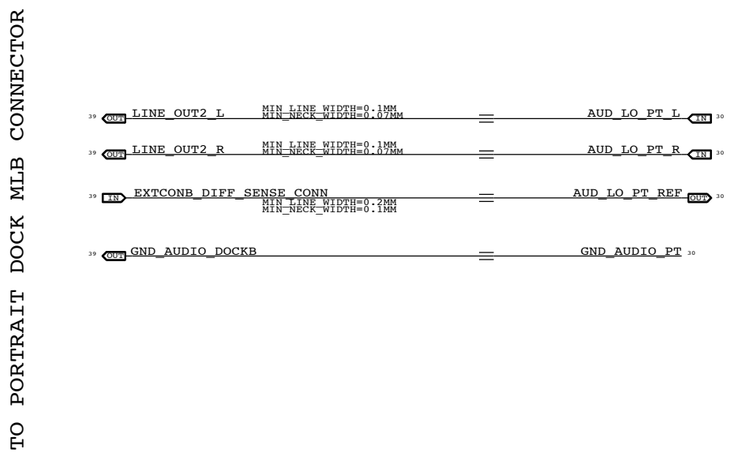

LANDSCAPE DOCK LINE OUTPUT ESD CIRCUIT

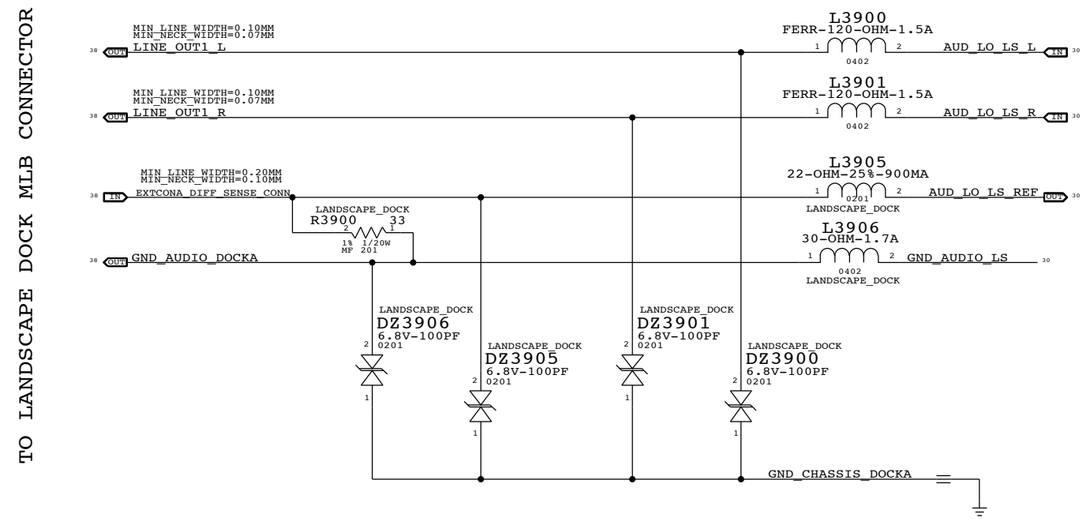

AUDIENCE BYPASS SHUNTS

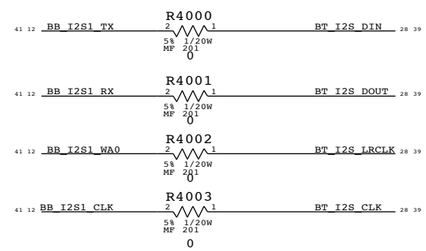

INTERNAL(BUILT-IN) ANALOG MIC BIAS & FILTER

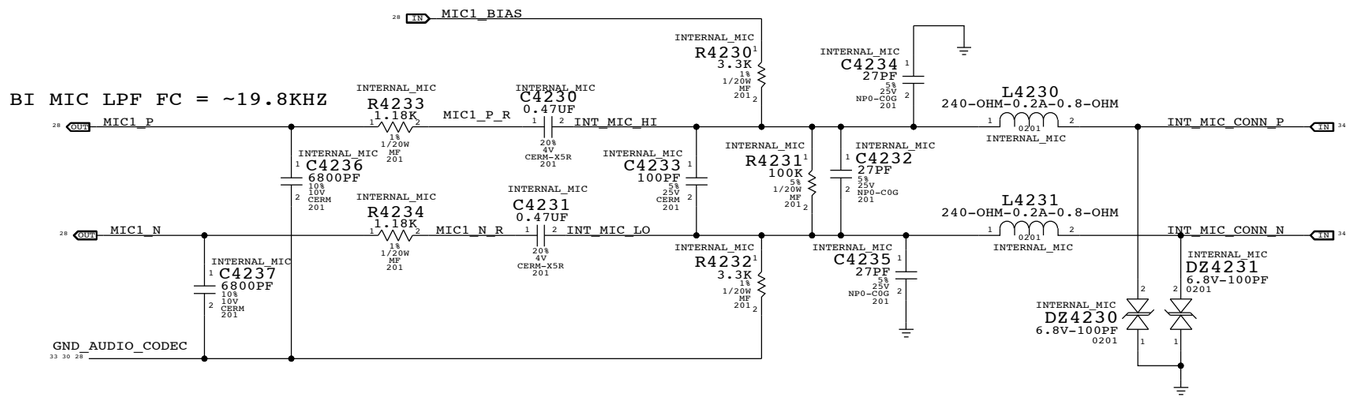

EXTERNAL MIC INPUT CIRCUITRY

APN:353S2640

I2C ADD: READ=72H, WRITE=73H

NOTE: INT IS OPEN DRAIN, PULL UP ON MIKEY SIDE

EXT MIC LPF FC = DISABLED

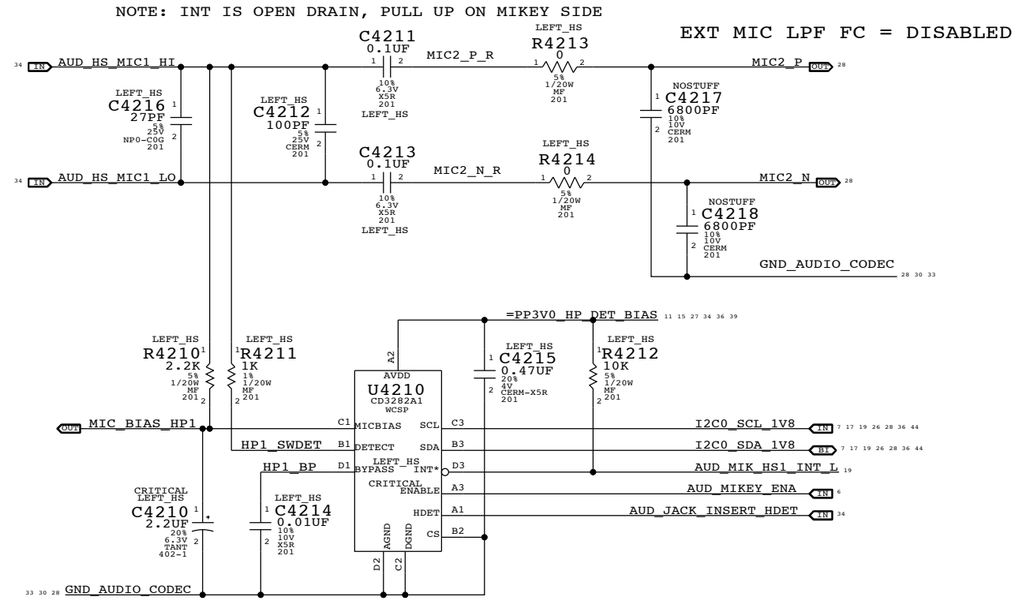

JACK 1 MLB CONNECTOR: HEADPHONE/HS_MIC/INT_MIC

APN: 518S0693

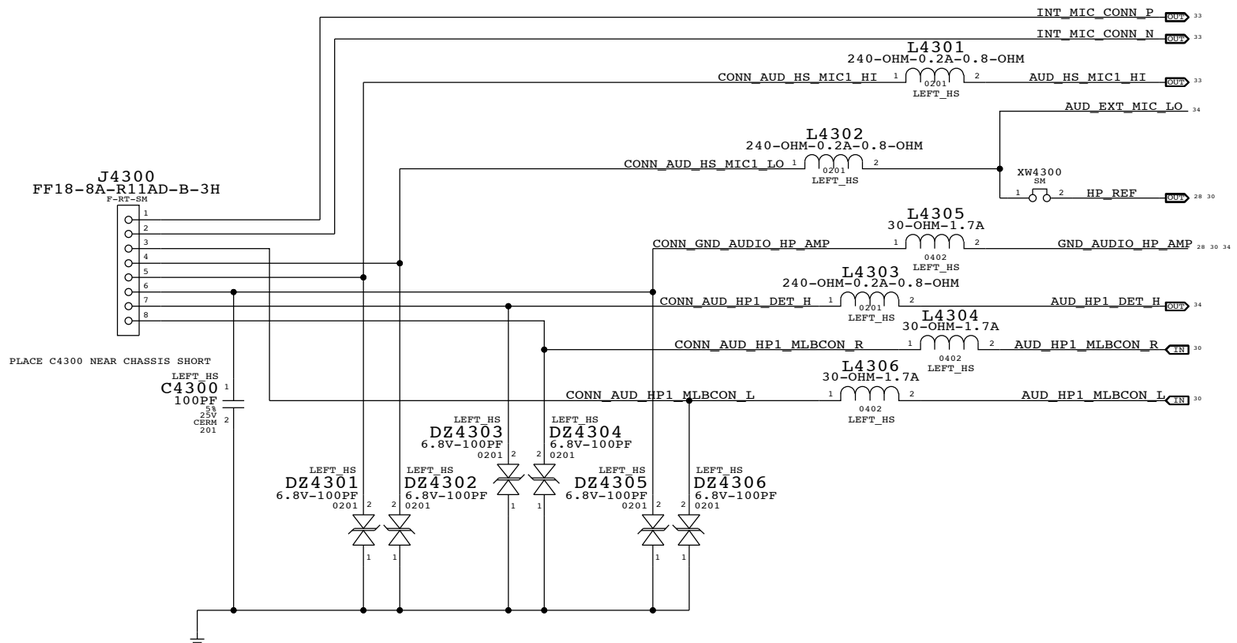

HEADSET HP/MIC CROSSTALK MITIGATION (NOT USED)

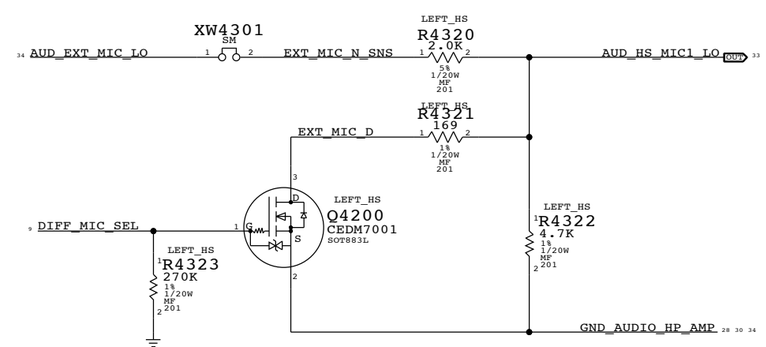

HEADSET JACK INSERTION DETECT

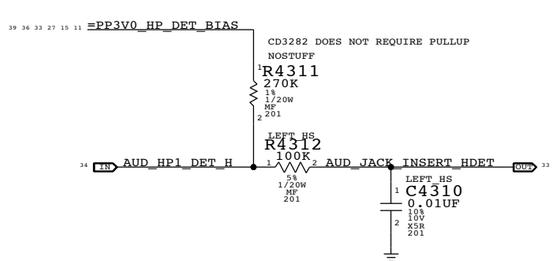

ALS CONN.

FPC CONNECTOR

APN: 516S0498

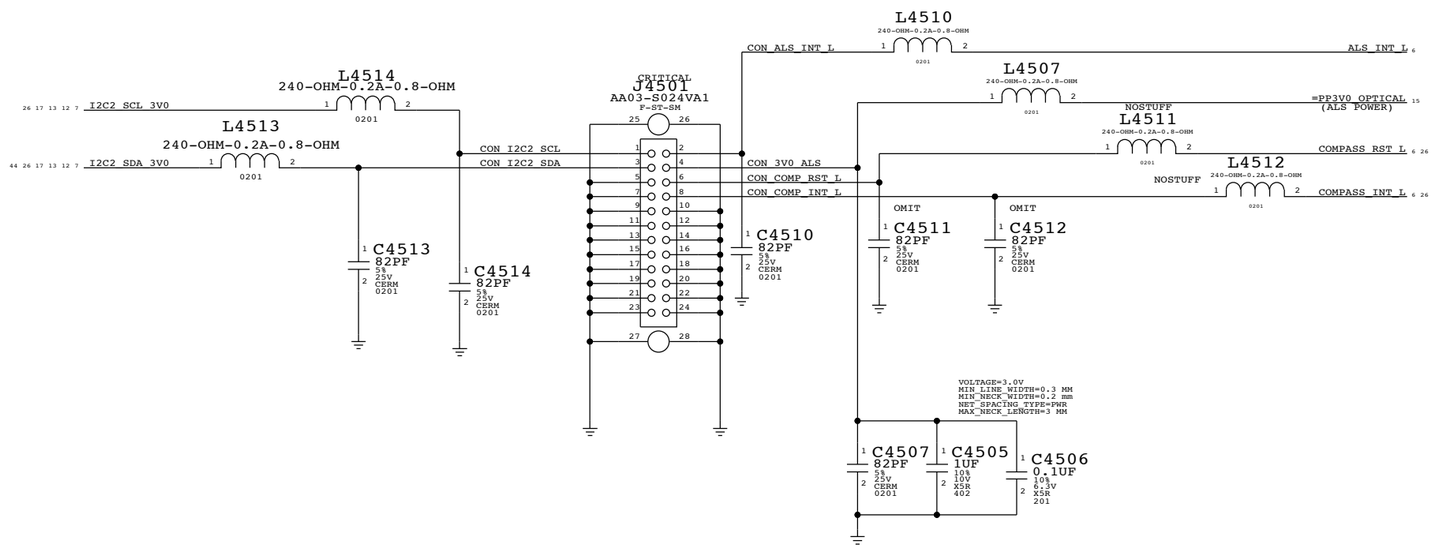

PART#	QTY	DESCRIPTION	REFERENCE DESIGNATOR(S)	BOM OPTION
11780002	2	0-OHM,5%,1/20W,MF,0201	C4511,C4512	

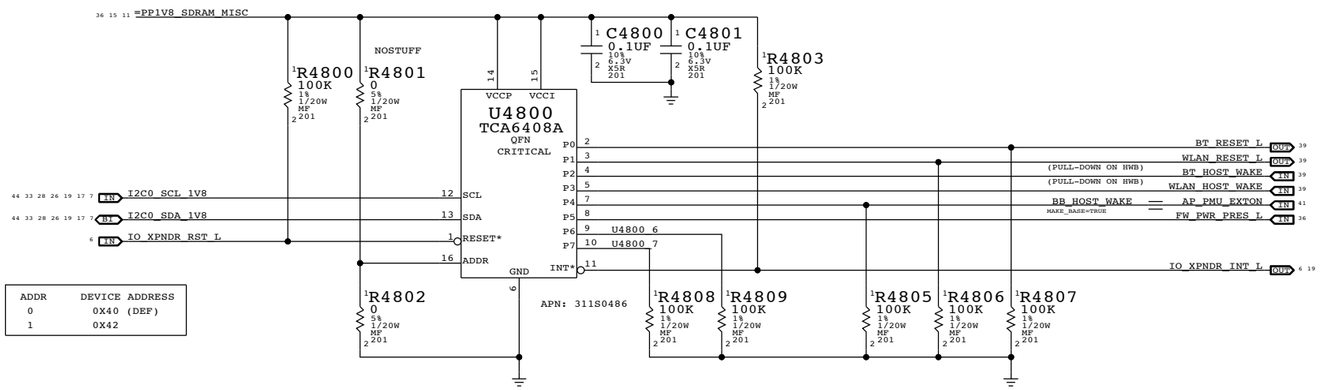

ADDR	DEVICE ADDRESS
0	0X40 (DEF)
1	0X42

THIS IS SAME AS PREVIOUS, BUT CE APPROVED APN NUMBER (SAME PART)

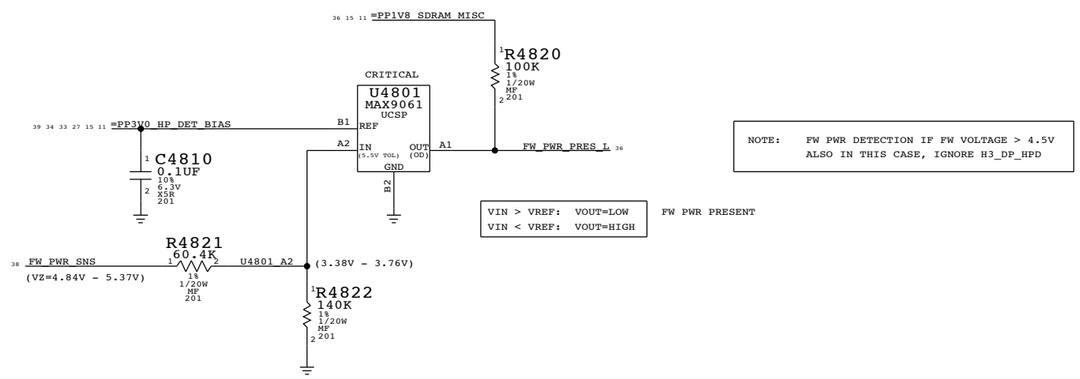

NOTE: FW PWR DETECTION IF FW VOLTAGE > 4.5V
ALSO IN THIS CASE, IGNORE H3_DP_HPD

VIN > VREF:	VOUT=LOW	FW PWR PRESENT
VIN < VREF:	VOUT=HIGH	

DisplayPort Mux

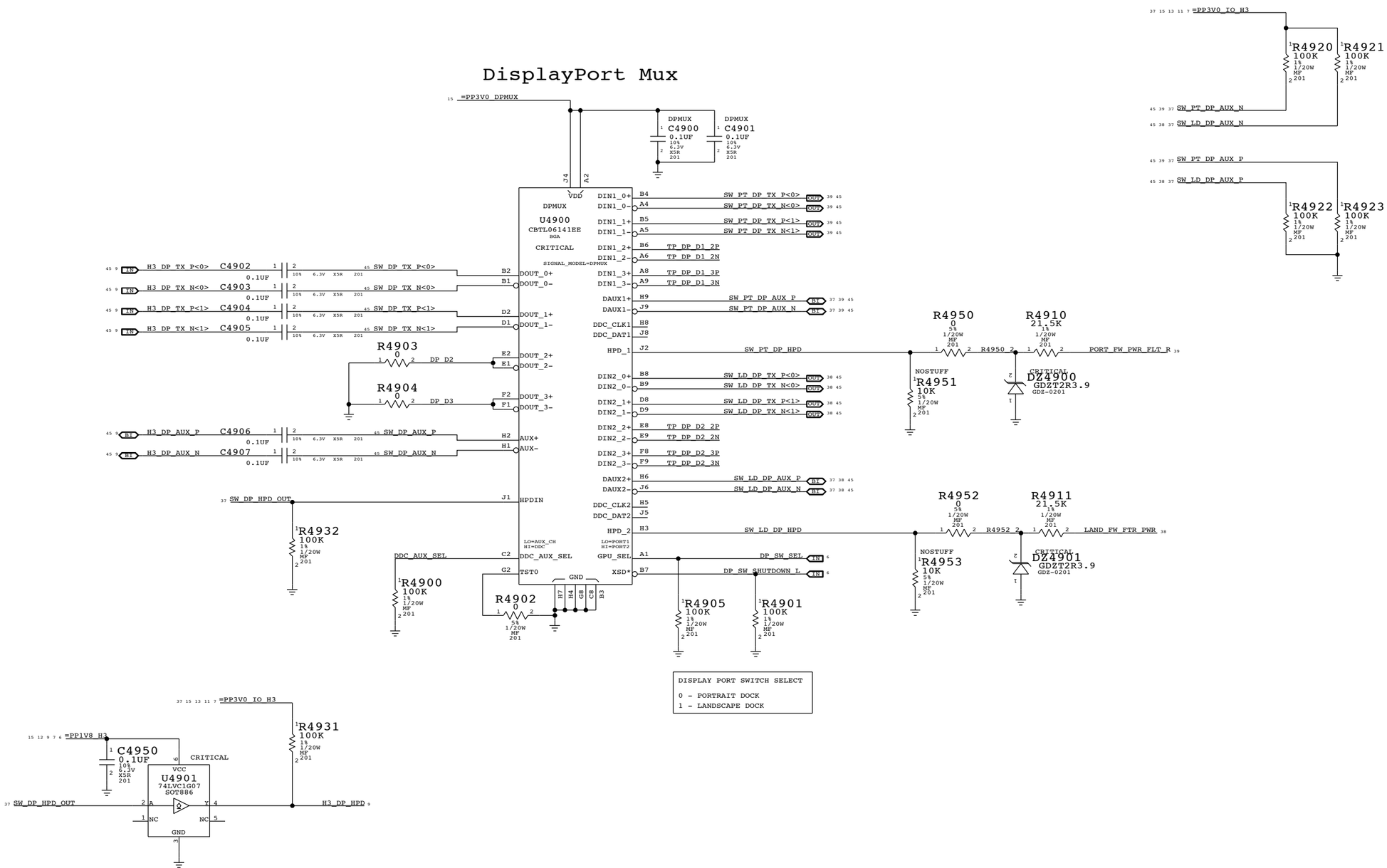

DISPLAY PORT SWITCH SELECT

0 - PORTRAIT DOCK

1 - LANDSCAPE DOCK

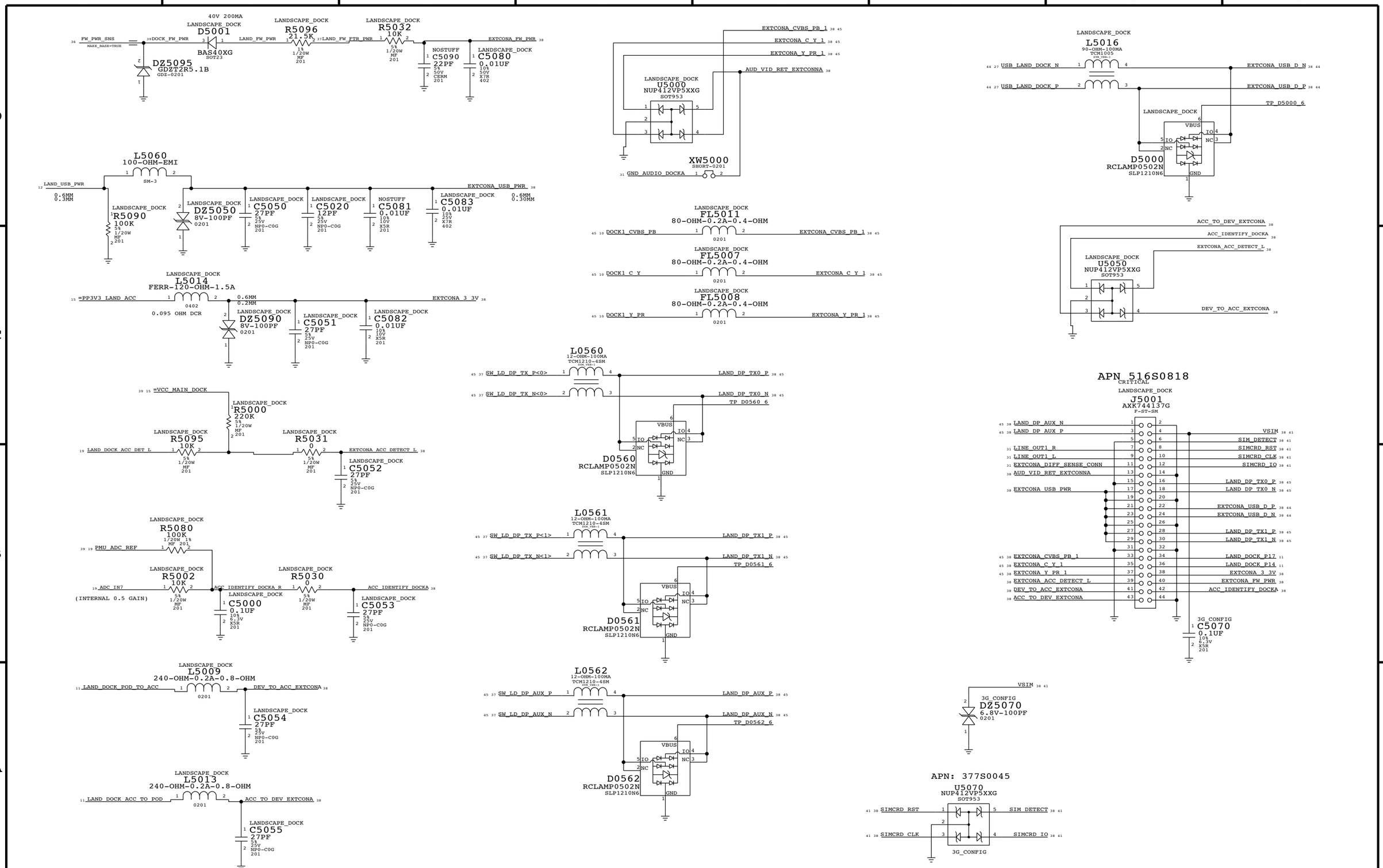
FW_PWR_SNS
MAKE_BASE=TRUE
DOCK_FW_PWR
40V 200MA
LANDSCAPE_DOCK
D5001
BAS40XG
SOT23
LAND_FW_PWR
LANDSCAPE_DOCK
R5096
21.5K
1% 1/20W MF 201
LAND_FW_FTR_PWR
LANDSCAPE_DOCK
R5032
10K
5% 1/20W MF 201
EXTCONA_FW_PWR
DZ5095
GDZT2R5.1B
GDZ-0201
NOSTUFF
C5090
22PF
5% 50V CERM 201
LANDSCAPE_DOCK
C5080
0.01UF
10% 50V X7R 402
EXTCONA_CVBS_PB_1
EXTCONA_C_Y_1
EXTCONA_Y_PR_1
AUD_VID_RET_EXTCONNA
LANDSCAPE_DOCK
U5000
NUP412VP5XXG
SOT953
XW5000
SHORT-0201
GND_AUDIO_DOCKA
LANDSCAPE_DOCK
L5016
90-OHM-100MA
TCM1005
USB_LAND_DOCK_N
USB_LAND_DOCK_P
EXTCONA_USB_D_N
EXTCONA_USB_D_P
TP_D5000_6
D5000
RCLAMP0502N
SLP1210N6
VBUS
IO
NC
GND
L5060
100-OHM-EMI
SM-3
LAND_USB_PWR
0.6MM
0.3MM
LANDSCAPE_DOCK
R5090
100K
5% 1/20W MF 201
DZ5050
8V-100PF
0201
C5050
27PF
5% 25V NPO-C0G 201
C5020
12PF
5% 25V NPO-C0G 201
NOSTUFF
C5081
0.01UF
10% 10V X5R 201
C5083
0.01UF
10% 25V X7R 402
EXTCONA_USB_PWR
FL5011
80-OHM-0.2A-0.4-OHM
0201
DOCK1_CVBS_PB
EXTCONA_CVBS_PB_1
FL5007
DOCK1_C_Y
EXTCONA_C_Y_1
FL5008
DOCK1_Y_PR
EXTCONA_Y_PR_1
ACC_TO_DEV_EXTCONA
ACC_IDENTIFY_DOCKA
EXTCONA_ACC_DETECT_L
U5050
DEV_TO_ACC_EXTCONA
L5014
FERR-120-OHM-1.5A
=PP3V3_LAND_ACC
0402
0.095 OHM DCR
EXTCONA_3_3V
DZ5090
8V-100PF
C5051
27PF
C5082
0.01UF
L0560
12-OHM-100MA
TCM1210-4SM
SW_LD_DP_TX_P<0>
SW_LD_DP_TX_N<0>
LAND_DP_TX0_P
LAND_DP_TX0_N
TP_D0560_6
D0560
=VCC_MAIN_DOCK
R5000
220K
R5095
10K
LAND_DOCK_ACC_DET_L
R5031
0
EXTCONA_ACC_DETECT_L
C5052
27PF
APN 516S0818
CRITICAL
J5001
AXK744137G
F-ST-SM
LAND_DP_AUX_N
LAND_DP_AUX_P
LINE_OUT1_R
LINE_OUT1_L
EXTCONA_DIFF_SENSE_CONN
AUD_VID_RET_EXTCONNA
EXTCONA_USB_PWR
VSIM
SIM_DETECT
SIMCRD_RST
SIMCRD_CLK
SIMCRD_IO
LAND_DP_TX1_P
LAND_DP_TX1_N
EXTCONA_USB_D_P
EXTCONA_USB_D_N
EXTCONA_CVBS_PB_1
EXTCONA_C_Y_1
EXTCONA_Y_PR_1
EXTCONA_ACC_DETECT_L
DEV_TO_ACC_EXTCONA
ACC_TO_DEV_EXTCONA
LAND_DOCK_P17
LAND_DOCK_P14
EXTCONA_3_3V
EXTCONA_FW_PWR
ACC_IDENTIFY_DOCKA
3G_CONFIG
C5070
0.1UF
PMU_ADC_REF
R5080
100K
1% 1/20W MF 201
ADC_IN7
(INTERNAL 0.5 GAIN)
R5002
10K
ACC_IDENTIFY_DOCKA_R
R5030
0
C5000
0.1UF
10% 6.3V X5R 201
C5053
27PF
L0561
D0561
L5009
240-OHM-0.2A-0.8-OHM
LAND_DOCK_POD_TO_ACC
C5054
27PF
L0562
D0562
DZ5070
6.8V-100PF
L5013
LAND_DOCK_ACC_TO_POD
C5055
27PF
APN: 377S0045
U5070
SIMCRD_RST
SIMCRD_CLK
SIM_DETECT
SIMCRD_IO

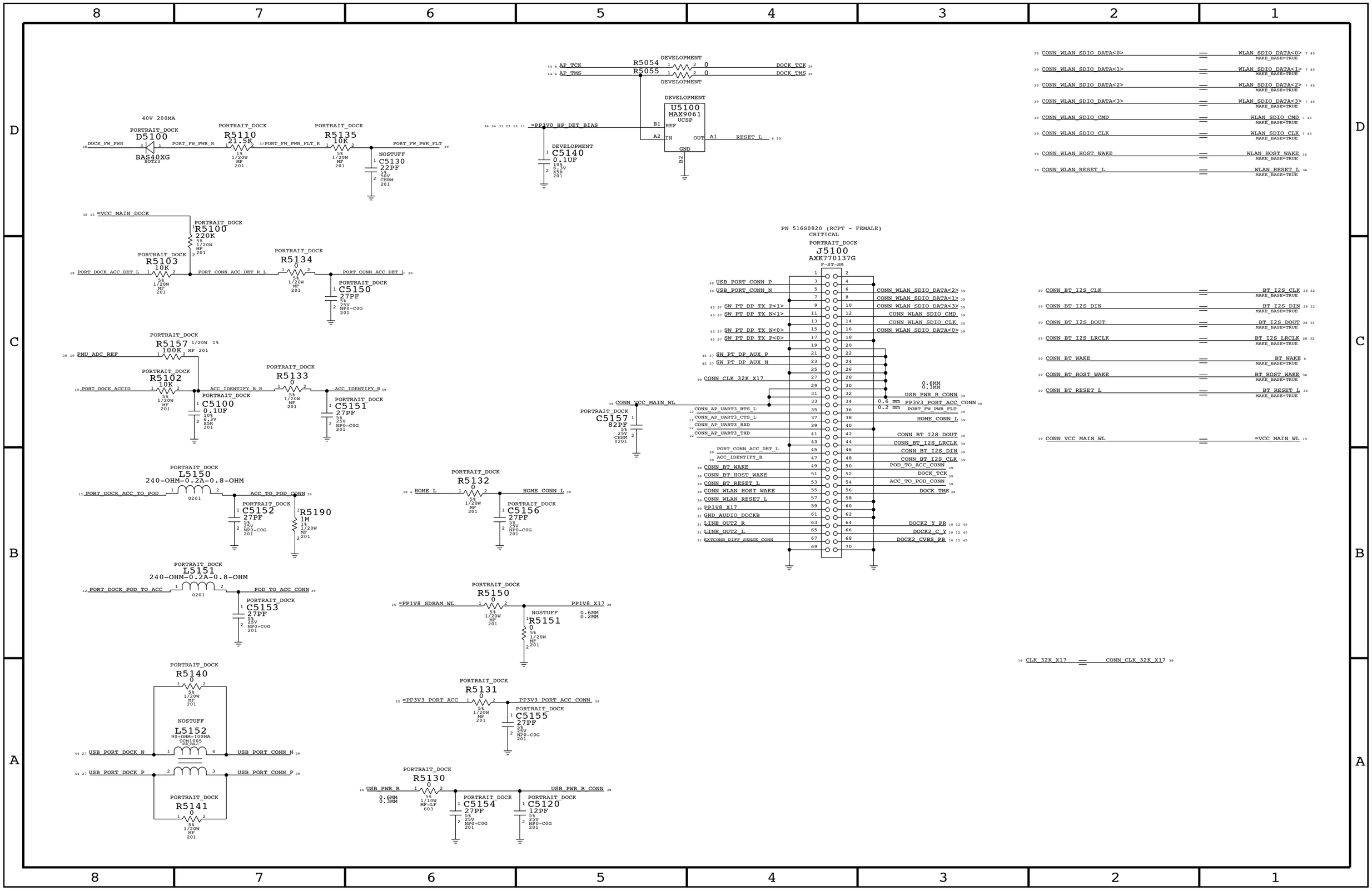
8 7 6 5 4 3 2 1
D C B A
40V 200MA
PORTRAIT_DOCK D5100 BAS40XG SOT23
DOCK_FW_PWR
PORT_FW_PWR_R
PORTRAIT_DOCK R5110 21.5K 1% 1/20W MF 201
PORT_FW_PWR_FLT_R
PORTRAIT_DOCK R5135 10K 5% 1/20W MF 201
PORT_FW_PWR_FLT
NOSTUFF C5130 22PF 5% 50V CERM 201
AP_TCK
AP_TMS
R5054
R5055
DEVELOPMENT 0
DOCK_TCK
DOCK_TMS
DEVELOPMENT U5100 MAX9061 UCSP
=PP3V0_HP_DET_BIAS
B1 REF A2 IN OUT A1 GND B2
RESET_L
DEVELOPMENT C5140 0.1UF 10% 6.3V X5R 201
CONN_WLAN_SDIO_DATA<0> — WLAN_SDIO_DATA<0> MAKE_BASE=TRUE
CONN_WLAN_SDIO_DATA<1> — WLAN_SDIO_DATA<1> MAKE_BASE=TRUE
CONN_WLAN_SDIO_DATA<2> — WLAN_SDIO_DATA<2> MAKE_BASE=TRUE
CONN_WLAN_SDIO_DATA<3> — WLAN_SDIO_DATA<3> MAKE_BASE=TRUE
CONN_WLAN_SDIO_CMD — WLAN_SDIO_CMD MAKE_BASE=TRUE
CONN_WLAN_SDIO_CLK — WLAN_SDIO_CLK MAKE_BASE=TRUE
CONN_WLAN_HOST_WAKE — WLAN_HOST_WAKE MAKE_BASE=TRUE
CONN_WLAN_RESET_L — WLAN_RESET_L MAKE_BASE=TRUE
=VCC_MAIN_DOCK
PORTRAIT_DOCK R5100 220K 5% 1/20W MF 201
PORTRAIT_DOCK R5103 10K 5% 1/20W MF 201
PORT_DOCK_ACC_DET_L
PORT_CONN_ACC_DET_R_L
PORTRAIT_DOCK R5134 0 5% 1/20W MF 201
PORT_CONN_ACC_DET_L
PORTRAIT_DOCK C5150 27PF 5% 25V NPO-C0G 201
PN 516S0820 (RCPT - FEMALE)
CRITICAL
PORTRAIT_DOCK J5100 AXK770137G F-ST-SM
USB_PORT_CONN_P
USB_PORT_CONN_N
SW_PT_DP_TX_P<1>
SW_PT_DP_TX_N<1>
SW_PT_DP_TX_N<0>
SW_PT_DP_TX_P<0>
SW_PT_DP_AUX_P
SW_PT_DP_AUX_N
CONN_CLK_32K_X17
CONN_WLAN_SDIO_DATA<2>
CONN_WLAN_SDIO_DATA<1>
CONN_WLAN_SDIO_DATA<3>
CONN_WLAN_SDIO_CMD
CONN_WLAN_SDIO_CLK
CONN_WLAN_SDIO_DATA<0>
0.6MM 0.3MM
USB_PWR_B_CONN
0.6 mm 0.2 mm
PP3V3_PORT_ACC_CONN
PORT_FW_PWR_FLT
HOME_CONN_L
CONN_BT_I2S_DOUT
CONN_BT_I2S_LRCLK
CONN_BT_I2S_DIN
CONN_BT_I2S_CLK
POD_TO_ACC_CONN
DOCK_TCK
ACC_TO_POD_CONN
DOCK_TMS
DOCK2_Y_PR
DOCK2_C_Y
DOCK2_CVBS_PB
CONN_BT_I2S_CLK — BT_I2S_CLK MAKE_BASE=TRUE
CONN_BT_I2S_DIN — BT_I2S_DIN MAKE_BASE=TRUE
CONN_BT_I2S_DOUT — BT_I2S_DOUT MAKE_BASE=TRUE
CONN_BT_I2S_LRCLK — BT_I2S_LRCLK MAKE_BASE=TRUE
CONN_BT_WAKE — BT_WAKE MAKE_BASE=TRUE
CONN_BT_HOST_WAKE — BT_HOST_WAKE MAKE_BASE=TRUE
CONN_BT_RESET_L — BT_RESET_L MAKE_BASE=TRUE
CONN_VCC_MAIN_WL — =VCC_MAIN_WL
PORTRAIT_DOCK R5157 100K 1/20W 1% MF 201
PMU_ADC_REF
PORTRAIT_DOCK R5102 10K 5% 1/20W MF 201
PORT_DOCK_ACCID
PORTRAIT_DOCK C5100 0.1UF 10% 6.3V X5R 201
ACC_IDENTIFY_B_R
PORTRAIT_DOCK R5133 0 5% 1/20W MF 201
ACC_IDENTIFY_B
PORTRAIT_DOCK C5151 27PF 5% 25V NPO-C0G 201
CONN_VCC_MAIN_WL
PORTRAIT_DOCK C5157 82PF 5% 25V CERM 0201
CONN_AP_UART3_RTS_L
CONN_AP_UART3_CTS_L
CONN_AP_UART3_RXD
CONN_AP_UART3_TXD
PORT_CONN_ACC_DET_L
ACC_IDENTIFY_B
CONN_BT_WAKE
CONN_BT_HOST_WAKE
CONN_BT_RESET_L
CONN_WLAN_HOST_WAKE
CONN_WLAN_RESET_L
PP1V8_X17
GND_AUDIO_DOCKB
LINE_OUT2_R
LINE_OUT2_L
EXTCONB_DIFF_SENSE_CONN
CLK_32K_X17 — CONN_CLK_32K_X17
PORTRAIT_DOCK L5150 240-OHM-0.2A-0.8-OHM 0201
PORT_DOCK_ACC_TO_POD
ACC_TO_POD_CONN
PORTRAIT_DOCK C5152 27PF 5% 25V NPO-C0G 201
R5190 1M 1% 1/20W MF 201
PORTRAIT_DOCK R5132 0 5% 1/20W MF 201
HOME_L
HOME_CONN_L
PORTRAIT_DOCK C5156 27PF 5% 25V NPO-C0G 201
PORTRAIT_DOCK L5151 240-OHM-0.2A-0.8-OHM 0201
PORT_DOCK_POD_TO_ACC
POD_TO_ACC_CONN
PORTRAIT_DOCK C5153 27PF 5% 25V NPO-C0G 201
PORTRAIT_DOCK R5150 0 5% 1/20W MF 201
=PP1V8_SDRAM_WL
PP1V8_X17
NOSTUFF R5151 0 5% 1/20W MF 201
0.6MM 0.2MM
PORTRAIT_DOCK R5140 0 5% 1/20W MF 201
NOSTUFF L5152 90-OHM-100MA TCM1005 SMD_TBD-1
USB_PORT_DOCK_N
USB_PORT_CONN_N
USB_PORT_DOCK_P
USB_PORT_CONN_P
PORTRAIT_DOCK R5141 0 5% 1/20W MF 201
PORTRAIT_DOCK R5131 0 5% 1/20W MF 201
=PP3V3_PORT_ACC
PP3V3_PORT_ACC_CONN
PORTRAIT_DOCK C5155 27PF 5% 25V NPO-C0G 201
PORTRAIT_DOCK R5130 0 5% 1/10W MF-LF 603
USB_PWR_B
0.6MM 0.3MM
USB_PWR_B_CONN
PORTRAIT_DOCK C5154 27PF 5% 25V NPO-C0G 201
PORTRAIT_DOCK C5120 12PF 5% 25V NPO-C0G 201

BUTTON CONNECTOR

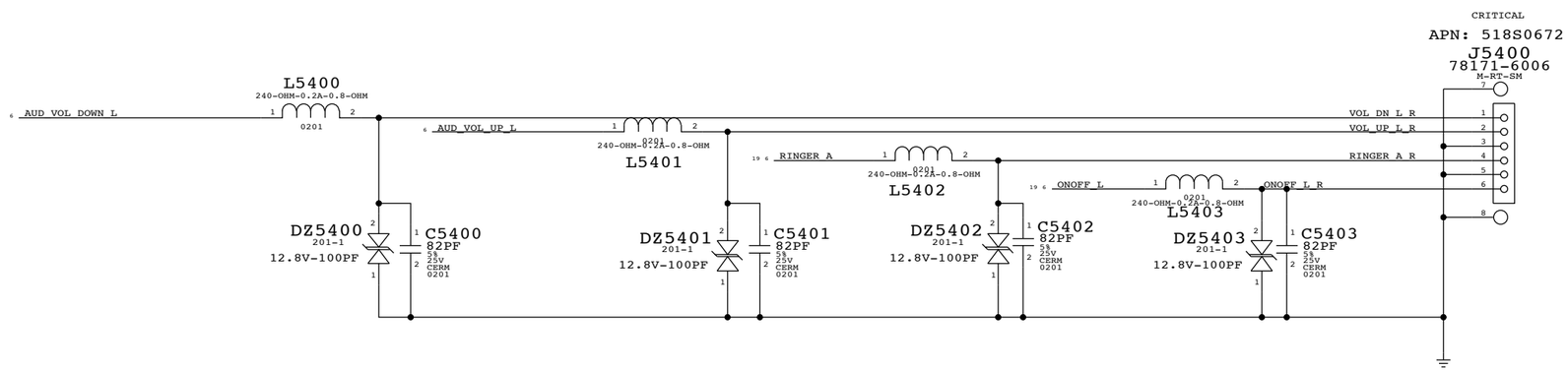

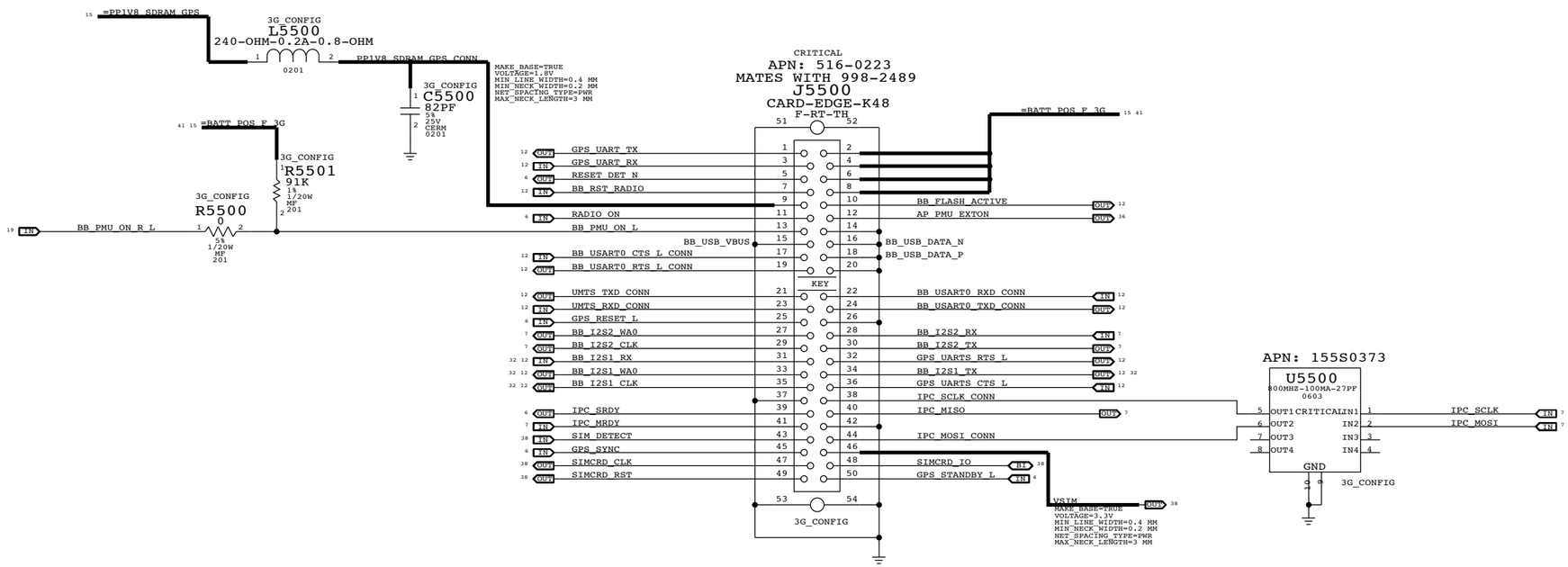
=PP1V8_SDRAM_GPS
3G_CONFIG
L5500
240-OHM-0.2A-0.8-OHM
0201
PP1V8_SDRAM_GPS_CONN
MAKE_BASE=TRUE
VOLTAGE=1.8V
MIN_LINE_WIDTH=0.4 MM
MIN_NECK_WIDTH=0.2 MM
NET_SPACING_TYPE=PWR
MAX_NECK_LENGTH=3 MM
3G_CONFIG
C5500
82PF
5%
25V
CERM
0201
=BATT_POS_F_3G
3G_CONFIG
R5501
91K
1%
1/20W
MF
201
3G_CONFIG
R5500
0
5%
1/20W
MF
201
BB_PMU_ON_R_L
CRITICAL
APN: 516-0223
MATES WITH 998-2489
J5500
CARD-EDGE-K48
F-RT-TH
GPS_UART_TX
GPS_UART_RX
RESET_DET_N
BB_RST_RADIO
RADIO_ON
BB_PMU_ON_L
BB_USB_VBUS
BB_USART0_CTS_L_CONN
BB_USART0_RTS_L_CONN
UMTS_TXD_CONN
UMTS_RXD_CONN
GPS_RESET_L
BB_I2S2_WA0
BB_I2S2_CLK
BB_I2S1_RX
BB_I2S1_WA0
BB_I2S1_CLK
IPC_SRDY
IPC_MRDY
SIM_DETECT
GPS_SYNC
SIMCRD_CLK
SIMCRD_RST
KEY
3G_CONFIG
BB_FLASH_ACTIVE
AP_PMU_EXTON
BB_USB_DATA_N
BB_USB_DATA_P
BB_USART0_RXD_CONN
BB_USART0_TXD_CONN
BB_I2S2_RX
BB_I2S2_TX
GPS_UARTS_RTS_L
BB_I2S1_TX
GPS_UARTS_CTS_L
IPC_SCLK_CONN
IPC_MISO
IPC_MOSI_CONN
SIMCRD_IO
GPS_STANDBY_L
VSIM
MAKE_BASE=TRUE
VOLTAGE=3.3V
MIN_LINE_WIDTH=0.4 MM
MIN_NECK_WIDTH=0.2 MM
NET_SPACING_TYPE=PWR
MAX_NECK_LENGTH=3 MM
APN: 155S0373
U5500
800MHZ-100MA-27PF
0603
OUT1
OUT2
OUT3
OUT4
CRITICAL
IN1
IN2
IN3
IN4
GND
3G_CONFIG
IPC_SCLK
IPC_MOSI

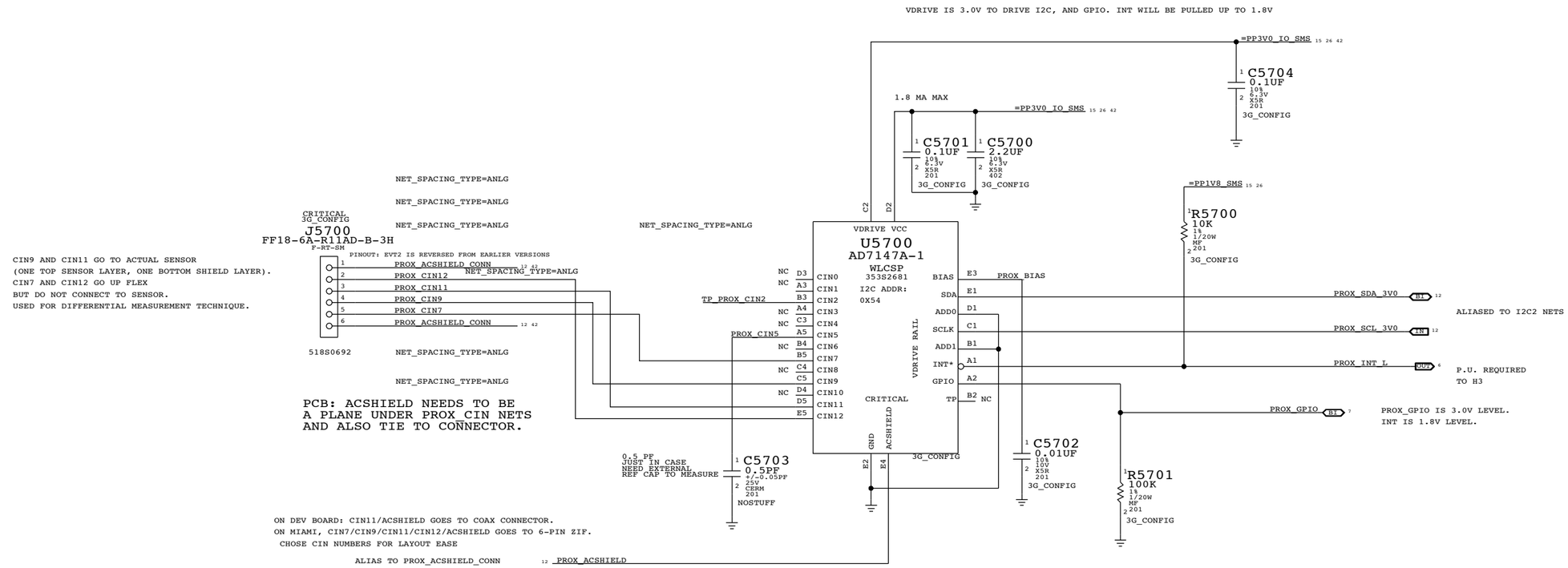
VDRIVE IS 3.0V TO DRIVE I2C, AND GPIO. INT WILL BE PULLED UP TO 1.8V
=PP3V0_IO_SMS 15 26 42
C5704
0.1UF
10% 6.3V X5R 201
3G_CONFIG
1.8 MA MAX
=PP3V0_IO_SMS 15 26 42
C5701
0.1UF
10% 6.3V X5R 201
3G_CONFIG
C5700
2.2UF
10% 6.3V X5R 402
3G_CONFIG
=PP1V8_SMS 15 26
R5700
10K
1% 1/20W MF 201
3G_CONFIG
NET_SPACING_TYPE=ANLG
NET_SPACING_TYPE=ANLG
NET_SPACING_TYPE=ANLG
NET_SPACING_TYPE=ANLG
CRITICAL
3G_CONFIG
J5700
FF18-6A-R11AD-B-3H
F-RT-SM
PINOUT: EVT2 IS REVERSED FROM EARLIER VERSIONS
CIN9 AND CIN11 GO TO ACTUAL SENSOR
(ONE TOP SENSOR LAYER, ONE BOTTOM SHIELD LAYER).
CIN7 AND CIN12 GO UP FLEX
BUT DO NOT CONNECT TO SENSOR.
USED FOR DIFFERENTIAL MEASUREMENT TECHNIQUE.
PROX_ACSHIELD_CONN 12 42
NET_SPACING_TYPE=ANLG
PROX_CIN12
PROX_CIN11
PROX_CIN9
PROX_CIN7
PROX_ACSHIELD_CONN 12 42
518S0692
NET_SPACING_TYPE=ANLG
NET_SPACING_TYPE=ANLG
NET_SPACING_TYPE=ANLG
VDRIVE VCC
U5700
AD7147A-1
WLCSP
353S2681
I2C ADDR:
0X54
CIN0
CIN1
CIN2
CIN3
CIN4
CIN5
CIN6
CIN7
CIN8
CIN9
CIN10
CIN11
CIN12
BIAS
SDA
ADD0
SCLK
ADD1
INT*
GPIO
TP
VDRIVE RAIL
CRITICAL
GND
ACSHIELD
3G_CONFIG
TP_PROX_CIN2
PROX_CIN5
PROX_BIAS
PROX_SDA_3V0
PROX_SCL_3V0
PROX_INT_L
PROX_GPIO
ALIASED TO I2C2 NETS
P.U. REQUIRED
TO H3
PROX_GPIO IS 3.0V LEVEL.
INT IS 1.8V LEVEL.
PCB: ACSHIELD NEEDS TO BE
A PLANE UNDER PROX_CIN NETS
AND ALSO TIE TO CONNECTOR.
0.5 PF
JUST IN CASE
NEED EXTERNAL
REF CAP TO MEASURE
C5703
0.5PF
+/-0.05PF 25V CERM 201
NOSTUFF
C5702
0.01UF
10% 10V X5R 201
3G_CONFIG
R5701
100K
1% 1/20W MF 201
3G_CONFIG
ON DEV BOARD: CIN11/ACSHIELD GOES TO COAX CONNECTOR.
ON MIAMI, CIN7/CIN9/CIN11/CIN12/ACSHIELD GOES TO 6-PIN ZIF.
CHOSE CIN NUMBERS FOR LAYOUT EASE
ALIAS TO PROX_ACSHIELD_CONN
12 PROX_ACSHIELD
PCB: ENSURE ACSHIELD PLANE UNDER
U5700, NO GND PLANE NEAR PROX_CIN NETS..

16GB FLASH CONFIGURATIONS

PART#	QTY	DESCRIPTION	REFERENCE DESIGNATOR(S)	BOM OPTION
335S0648	2	TOSHIBA 43NM 8GB	U6700,U6710	16GB_PROD

PART NUMBER	ALTERNATE FOR PART NUMBER	BOM OPTION	REF DES	COMMENTS:
335S0683	335S0648	16GB_PROD	U6700,U6710	SAMSUNG 35NM 8GB

32GB FLASH CONFIGURATIONS

PART#	QTY	DESCRIPTION	REFERENCE DESIGNATOR(S)	BOM OPTION
335S0649	2	TOSHIBA 43NM 16GB	U6700,U6710	32GB_PROD

PART NUMBER	ALTERNATE FOR PART NUMBER	BOM OPTION	REF DES	COMMENTS:
335S0682	335S0649	32GB_PROD	U6700,U6710	SAMSUNG 35NM 16GB

64GB FLASH CONFIGURATIONS

PART#	QTY	DESCRIPTION	REFERENCE DESIGNATOR(S)	BOM OPTION
335S0650	2	TOSHIBA 43NM 32GB	U6700,U6710	64GB_PROD

PART NUMBER	ALTERNATE FOR PART NUMBER	BOM OPTION	REF DES	COMMENTS:
335S0665	335S0650	64GB_PROD	U6700,U6710	SAMSUNG 35NM 32GB

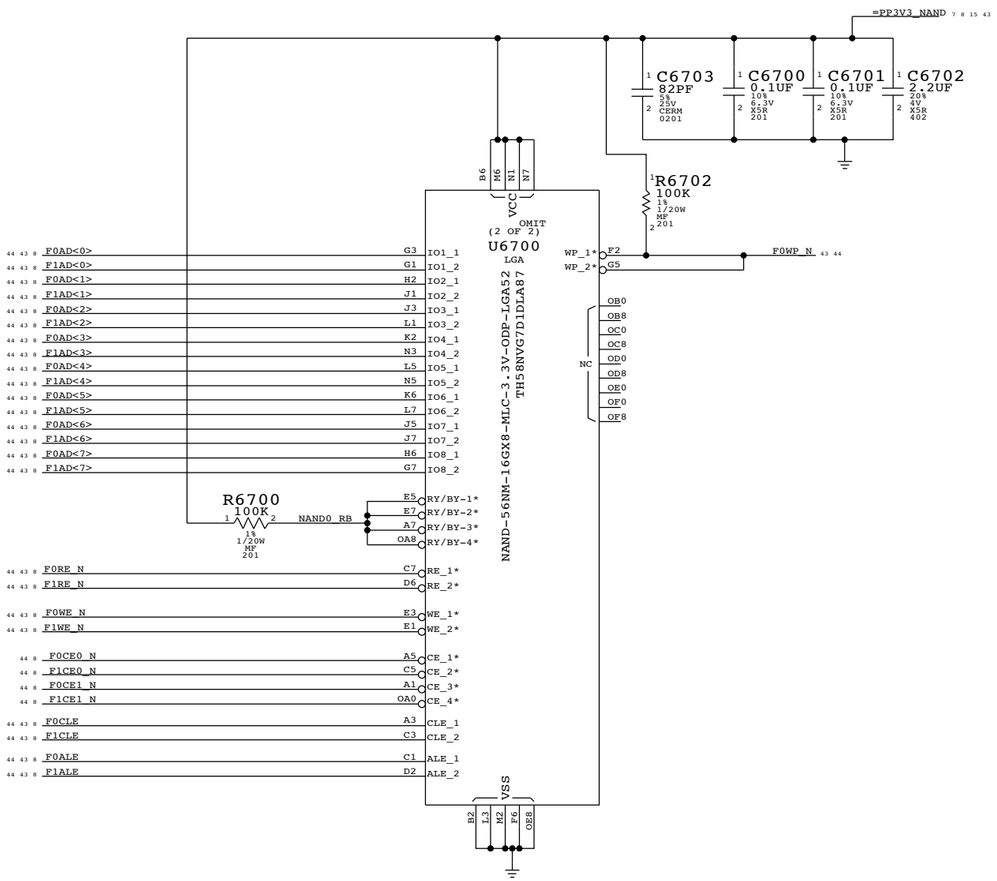

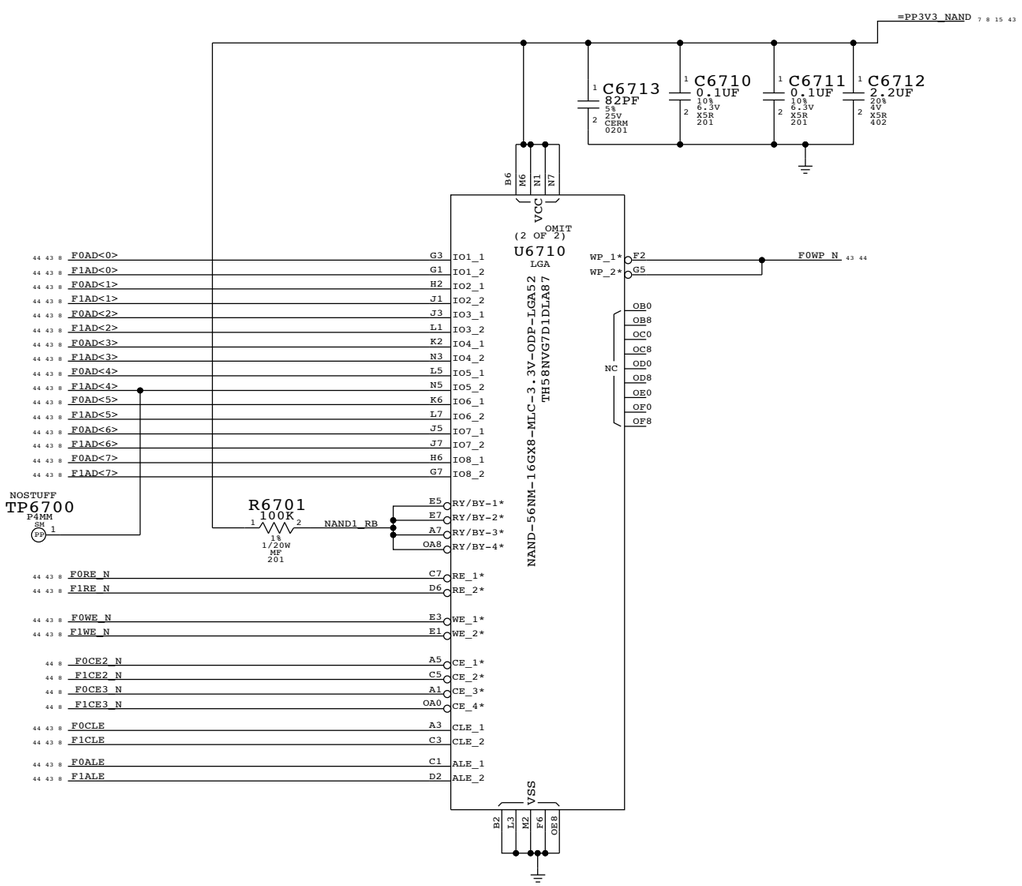

Clock Signal Constraints

NET_PHYSICAL_TYPE	AREA_TYPE	PHYSICAL_RULE_SET
CLK_50S	*	50_OHM_SE

NET_SPACING_TYPE1	NET_SPACING_TYPE2	AREA_TYPE	SPACING_RULE_SET
CLK	*	*	0P5MM_SPACING

USB 2.0 Interface Constraints

NET_PHYSICAL_TYPE	AREA_TYPE	PHYSICAL_RULE_SET
USB_90D	*	90_OHM_DIFF

NET_SPACING_TYPE1	NET_SPACING_TYPE2	AREA_TYPE	SPACING_RULE_SET
USB	*	*	0P5MM_SPACING

OTHER CONSTRAINTS

NET_PHYSICAL_TYPE	AREA_TYPE	PHYSICAL_RULE_SET
I2C_50S	*	50_OHM_SE
NAND_50S	*	50_OHM_SE
AUDIO	*	1:1_DIFFPAIR
SPEAKER	*	SPEAKER

NET_SPACING_TYPE1	NET_SPACING_TYPE2	AREA_TYPE	SPACING_RULE_SET
NAND	*	*	1.5:1_SPACING
I2C	*	*	1.5:1_SPACING
AUDIO	*	*	3:1_SPACING

	ELECTRICAL_CONSTRAINT_SET	NET_TYPE PHYSICAL	NET_TYPE SPACING		
E16			JTAG	AP_TCK	6 39
E15			JTAG	AP_TMS	6 39
E14			JTAG	AP_TDI	6 12
E13			JTAG	AP_TDO	12
E20			JTAG	AP_RTCK	
E4	USB	USB_90D	USB	USB_LAND_DOCK_P	27 38
E5	USB	USB_90D	USB	USB_LAND_DOCK_N	27 38
E7	USB	USB_90D	USB	USB_PORT_DOCK_P	27 39
E8	USB	USB_90D	USB	USB_PORT_DOCK_N	27 39
E9		USB_90D	USB	EXTCONA_USB_D_P	38
E10		USB_90D	USB	EXTCONA_USB_D_N	38
E24	USB	USB_90D	USB	USB_DP	6 27
E23	USB	USB_90D	USB	USB_DM	6 27
E22				I2S1_DOUT	7 12
E21				I2S1_DIN	7 12
E28				I2S1_BCLK	7 12
E25				I2S1_LRCLK	7 12
E26				I2S1_MCLK	
E63		CLK_50S	CLK	CLK_32K_PMU	19 24
E59		NAND_50S	NAND	F1AD<7..0>	8 43
E50		NAND_50S	NAND	F0AD<7..0>	8 43
E45		NAND_50S	NAND	F0CE0_N	8 43
E48		NAND_50S	NAND	F0CE1_N	8 43
E47		NAND_50S	NAND	F0CE2_N	8 43
E46		NAND_50S	NAND	F0CE3_N	8 43
E51		NAND_50S	NAND	F0CLE	8 43
E52		NAND_50S	NAND	F0ALE	8 43
E53		NAND_50S	NAND	F0RE_N	8 43
E54		NAND_50S	NAND	F0WE_N	8 43
E57		NAND_50S	NAND	F0WP_N	43
E61		NAND_50S	NAND	F1CE0_N	8 43
E62		NAND_50S	NAND	F1CE1_N	8 43
E60		NAND_50S	NAND	F1CE2_N	8 43
E64		NAND_50S	NAND	F1CE3_N	8 43
E55		NAND_50S	NAND	F1CLE	8 43
E56		NAND_50S	NAND	F1ALE	8 43
E57		NAND_50S	NAND	F1RE_N	8 43
E58		NAND_50S	NAND	F1WE_N	8 43
E59		NAND_50S	NAND	F1WP_N	
E68		SPEAKER	AUDIO	SPKRAMP_L_OUT_P	29
E67		SPEAKER	AUDIO	SPKRAMP_L_OUT_N	29
E66		SPEAKER	AUDIO	SPKRAMP_R_OUT_P	29
E65		SPEAKER	AUDIO	SPKRAMP_R_OUT_N	29
E71	SPEAKER_ECS	AUDIO	AUDIO	EAR_OUT_P	28 29
E69		AUDIO	AUDIO	EAR_OUT_N	28 29
E72		AUDIO	AUDIO	SSM2319_L_IN_P	29
E73		AUDIO	AUDIO	SSM2319_L_IN_N	29
E75	SPEAKER_ECS	AUDIO	AUDIO	MONO_OUT_P	28 29
E77		AUDIO	AUDIO	MONO_OUT_N	28 29
E74		AUDIO	AUDIO	SSM2319_R_IN_P	29
E79		AUDIO	AUDIO	SSM2319_R_IN_N	29

I2C BUS NET PROPERTIES

	ELECTRICAL_CONSTRAINT_SET	NET_TYPE PHYSICAL	NET_TYPE SPACING		
E1	I2C1_ECS	I2C_50S	I2C	I2C1_SDA_1V8	7
E2	I2C1_ECS	I2C_50S	I2C	I2C1_SCL_1V8	7
E3	I2C0_ECS	I2C_50S	I2C	I2C0_SDA_1V8	7 17 19 26 28 33 36
E4	I2C0_ECS	I2C_50S	I2C	I2C0_SCL_1V8	7 17 19 26 28 33 36
E6	I2C2_ECS	I2C_50S	I2C	I2C2_SDA_3V0	7 12 13 17 28 35 44
E7	I2C2_ECS	I2C_50S	I2C	I2C2_SDA_3V0	7 12 13 17 28 35 44

Video Signal Constraints

PHYSICAL_RULE_SET	LAYER	ALLOW ROUTE ON LAYER?	MINIMUM LINE WIDTH	MINIMUM NECK WIDTH	MAXIMUM NECK LENGTH	DIFFPAIR PRIMARY GAP	DIFFPAIR NECK GAP
VID_50S	*	Y	=50_OHM_SE	=50_OHM_SE	=50_OHM_SE	=STANDARD	=STANDARD

NET_PHYSICAL_TYPE	AREA_TYPE	PHYSICAL_RULE_SET
LVDS_100D	*	90_OHM_DIFF
MIPI_100D	*	90_OHM_DIFF
SMIA_100D	*	90_OHM_DIFF
DP_100D	*	90_OHM_DIFF

NET_SPACING_TYPE1	NET_SPACING_TYPE2	AREA_TYPE	SPACING_RULE_SET
ANALOG_VIDEO	*	*	2.5:1_SPACING
LVDS	*	*	4:1_SPACING
MIPI	*	*	4:1_SPACING
SMIA	*	*	4:1_SPACING
DP	*	*	4:1_SPACING

SDIO SIGNAL CONSTRAINTS

NET_PHYSICAL_TYPE	AREA_TYPE	PHYSICAL_RULE_SET
SDIO_50S	*	50_OHM_SE

NET_SPACING_TYPE1	NET_SPACING_TYPE2	AREA_TYPE	SPACING_RULE_SET
SDIO	*	*	1.5:1_SPACING

ANALOG VIDEO CONSTRAINTS

ELECTRICAL_CONSTRAINT_SET	NET_TYPE PHYSICAL	NET_TYPE SPACING		
I213	VID_50S	ANALOG_VIDEO	DAC_OUT1	10
I214	VID_50S	ANALOG_VIDEO	DAC_OUT2	10
I215	VID_50S	ANALOG_VIDEO	DAC_OUT3	10
I216	VID_50S	ANALOG_VIDEO	LAND_YOUT	10
I217	VID_50S	ANALOG_VIDEO	LAND_CVBS_OUT	10
I218	VID_50S	ANALOG_VIDEO	LAND_COUT	10
I232	VID_50S	ANALOG_VIDEO	PORT_YOUT	10
I231	VID_50S	ANALOG_VIDEO	PORT_CVBS_OUT	10
I233	VID_50S	ANALOG_VIDEO	PORT_COUT	10
I219	VID_50S	ANALOG_VIDEO	DOCK1_CVBS_PB	10 38
I220	VID_50S	ANALOG_VIDEO	DOCK1_C_Y	10 38
I221	VID_50S	ANALOG_VIDEO	DOCK1_Y_PR	10 38
I222	VID_50S	ANALOG_VIDEO	EXTCONA_CVBS_PB_1	38
I223	VID_50S	ANALOG_VIDEO	EXTCONA_C_Y_1	38
I224	VID_50S	ANALOG_VIDEO	EXTCONA_Y_PR_1	38
I225	VID_50S	ANALOG_VIDEO	DOCK2_CVBS_PB	10 12 39
I226	VID_50S	ANALOG_VIDEO	DOCK2_C_Y	10 12 39
I227	VID_50S	ANALOG_VIDEO	DOCK2_Y_PR	10 12 39

MIPI,SMIA AND DISPLAYPORT BUS CONSTRAINTS

ELECTRICAL_CONSTRAINT_SET	NET_TYPE PHYSICAL	NET_TYPE SPACING		
I91 MIPI_ECS	MIPI_100D	MIPI	H3_MIPID_DATA_P<0>	9 14
I92	MIPI_100D	MIPI	H3_MIPID_DATA_N<0>	9 14
I93 MIPI_ECS	MIPI_100D	MIPI	H3_MIPID_DATA_P<1>	9 14
I94	MIPI_100D	MIPI	H3_MIPID_DATA_N<1>	9 14
I95 MIPI_ECS	MIPI_100D	MIPI	H3_MIPID_DATA_P<2>	9 14
I96	MIPI_100D	MIPI	H3_MIPID_DATA_N<2>	9 14
I279 MIPI_ECS	MIPI_100D	MIPI	H3_MIPID_DATA_P<3>	9 14
I278	MIPI_100D	MIPI	H3_MIPID_DATA_N<3>	9 14
I97 MIPI_ECS	MIPI_100D	MIPI	H3_MIPID_CLK_P	9 14
I98	MIPI_100D	MIPI	H3_MIPID_CLK_N	9 14
I99 SMIA_ECS	SMIA_100D	SMIA	CAM_SMIA_DATA_P	
I100	SMIA_100D	SMIA	CAM_SMIA_DATA_N	
I176 SMIA_ECS	SMIA_100D	SMIA	CAM_SMIA_CLK_P	
I175	SMIA_100D	SMIA	CAM_SMIA_CLK_N	
I276	SMIA_100D	SMIA	CONN_SMIA_CLK_P	
I275	SMIA_100D	SMIA	CONN_SMIA_CLK_N	
I247 DP_H3_ECS	DP_100D	DP	H3_DP_TX_P<0>	9 37
I248	DP_100D	DP	H3_DP_TX_N<0>	9 37
I249 DP_H3_ECS	DP_100D	DP	H3_DP_TX_P<1>	9 37
I250	DP_100D	DP	H3_DP_TX_N<1>	9 37
I251 DP_H3_ECS	DP_100D	DP	H3_DP_AUX_P	9 37
I252	DP_100D	DP	H3_DP_AUX_N	9 37
I253	DP_100D	DP	SW_DP_TX_P<0>	37
I246	DP_100D	DP	SW_DP_TX_N<0>	37
I254	DP_100D	DP	SW_DP_TX_P<1>	37
I255	DP_100D	DP	SW_DP_TX_N<1>	37
I256	DP_100D	DP	SW_DP_AUX_P	37
I257	DP_100D	DP	SW_DP_AUX_N	37
I259 DP_PORT_ECS	DP_100D	DP	SW_PT_DP_TX_P<0>	37 39
I260	DP_100D	DP	SW_PT_DP_TX_N<0>	37 39
I261 DP_PORT_ECS	DP_100D	DP	SW_PT_DP_TX_P<1>	37 39
I262	DP_100D	DP	SW_PT_DP_TX_N<1>	37 39
I263 DP_PORT_ECS	DP_100D	DP	SW_PT_DP_AUX_P	37 39
I258	DP_100D	DP	SW_PT_DP_AUX_N	37 39
I264 DP_LAND_ECS	DP_100D	DP	SW_LD_DP_TX_P<0>	37 38
I265	DP_100D	DP	SW_LD_DP_TX_N<0>	37 38
I267 DP_LAND_ECS	DP_100D	DP	SW_LD_DP_TX_P<1>	37 38
I268	DP_100D	DP	SW_LD_DP_TX_N<1>	37 38
I269 DP_LAND_ECS	DP_100D	DP	SW_LD_DP_AUX_P	37 38
I266	DP_100D	DP	SW_LD_DP_AUX_N	37 38
I271	DP_100D	DP	LAND_DP_TX0_P	38
I272	DP_100D	DP	LAND_DP_TX0_N	38
I273	DP_100D	DP	LAND_DP_TX1_P	38
I274	DP_100D	DP	LAND_DP_TX1_N	38
I277	DP_100D	DP	LAND_DP_AUX_P	38
I270	DP_100D	DP	LAND_DP_AUX_N	38

LVDS CONSTRAINTS

ELECTRICAL_CONSTRAINT_SET	NET_TYPE PHYSICAL	NET_TYPE SPACING		
I172 LVDS_ECS	LVDS_100D	LVDS	LVDS_DATA_P<2..0>	13 25
I174	LVDS_100D	LVDS	LVDS_DATA_N<2..0>	13 25
I173 LVDS_ECS	LVDS_100D	LVDS	LVDS_CLK_P	13 25
I171	LVDS_100D	LVDS	LVDS_CLK_N	13 25
I236	LVDS_100D	LVDS	LVDS_CONN_CLK_P	25
I235	LVDS_100D	LVDS	LVDS_CONN_CLK_N	25
I242	LVDS_100D	LVDS	LVDS_DAT_P<2..0>	25
I243	LVDS_100D	LVDS	LVDS_DAT_N<2..0>	25

HX SDIO CONSTRAINTS

ELECTRICAL_CONSTRAINT_SET	NET_TYPE PHYSICAL	NET_TYPE SPACING		
I200 WLAN_SDIO_ECS	SDIO_50S	SDIO	WLAN_SDIO_CLK	7 39
I203 WLAN_SDIO_CMD_ECS	SDIO_50S	SDIO	WLAN_SDIO_CMD	7 39
I202 WLAN_SDIO_ECS	SDIO_50S	SDIO	WLAN_SDIO_DATA<3..0>	7 39

MIAMI BOARD-SPECIFIC SPACING & PHYSICAL CONSTRAINTS (10-LAYER)

BOARD LAYERS	BOARD AREAS	BOARD UNITS (MIL or MM)	ALLEGRO VERSION
TOP,ISL2,ISL3,ISL4,ISL5,ISL6,ISL7,ISL8,ISL9,BOTTOM	NO_TYPE,BGA	MM	15.2

PHYSICAL_RULE_SET	LAYER	ALLOW ROUTE ON LAYER?	MINIMUM LINE WIDTH	MINIMUM NECK WIDTH	MAXIMUM NECK LENGTH	DIFFPAIR PRIMARY GAP	DIFFPAIR NECK GAP
DEFAULT	*	Y	=50_OHM_SE	=50_OHM_SE	30 MM	0 MM	0 MM
STANDARD	*	Y	=DEFAULT	=DEFAULT	12.7 MM	=DEFAULT	=DEFAULT

PHYSICAL_RULE_SET	LAYER	ALLOW ROUTE ON LAYER?	MINIMUM LINE WIDTH	MINIMUM NECK WIDTH	MAXIMUM NECK LENGTH	DIFFPAIR PRIMARY GAP	DIFFPAIR NECK GAP
50_OHM_SE	TOP,BOTTOM	Y	0.230 MM	0.070 MM	3.0 MM		
50_OHM_SE	ISL2,ISL9	Y	0.076 MM	0.070 MM	3.0 MM		
50_OHM_SE	ISL4,ISL7	Y	0.076 MM	0.070 MM	3.0 MM		
50_OHM_SE	*	N	0.070 MM	0.070 MM	3.0 MM		

PHYSICAL_RULE_SET	LAYER	ALLOW ROUTE ON LAYER?	MINIMUM LINE WIDTH	MINIMUM NECK WIDTH	MAXIMUM NECK LENGTH	DIFFPAIR PRIMARY GAP	DIFFPAIR NECK GAP
BGA	*	Y	0.075 MM	0.075 MM	=STANDARD	0.076 MM	0.075 MM

PHYSICAL_RULE_SET	LAYER	ALLOW ROUTE ON LAYER?	MINIMUM LINE WIDTH	MINIMUM NECK WIDTH	MAXIMUM NECK LENGTH	DIFFPAIR PRIMARY GAP	DIFFPAIR NECK GAP
90_OHM_DIFF	*	Y	=STANDARD	=STANDARD	=STANDARD	=STANDARD	=STANDARD
90_OHM_DIFF	ISL4,ISL7	Y	0.070 MM	0.070 MM		0.200 MM	0.100 MM
90_OHM_DIFF	TOP,BOTTOM	Y	0.070 MM	0.070 MM		0.200 MM	0.200 MM

PHYSICAL_RULE_SET	LAYER	ALLOW ROUTE ON LAYER?	MINIMUM LINE WIDTH	MINIMUM NECK WIDTH	MAXIMUM NECK LENGTH	DIFFPAIR PRIMARY GAP	DIFFPAIR NECK GAP
1:1_DIFFPAIR	*	Y	=STANDARD	=STANDARD	=STANDARD	0.075 MM	0.075 MM
SPEAKER	*	Y	0.3 MM	0.19MM	10 MM	0.075 MM	0.075 MM

SPACING_RULE_SET	LAYER	LINE-TO-LINE SPACING	WEIGHT
DEFAULT	*	0.08 MM	?
STANDARD	*	=DEFAULT	?
BGA	*	=DEFAULT	?

NET_SPACING_TYPE1	NET_SPACING_TYPE2	AREA_TYPE	SPACING_RULE_SET
*	*	BGA	BGA
CLK	*	BGA	BGA
PWR	*	*	PWR_P1SPACING
GND	*	*	GND_P1SPACING
SWITCHNODE	*	*	SWITCHNODE
PWR	*	*	PWR_P1SPACING
ANLG	*	*	3:1_SPACING
CRYSTAL	*	*	3:1_SPACING
JTAG	*	*	2:1_SPACING
I2S_ST	*	*	2:1_SPACING
I2S_ST	I2S_ST	*	1.5:1_SPACING

NET_PHYSICAL_TYPE	AREA_TYPE	PHYSICAL_RULE_SET
*	BGA	BGA

SPACING_RULE_SET	LAYER	LINE-TO-LINE SPACING	WEIGHT
1:1_SPACING	*	0.075 MM	?
1.5:1_SPACING	*	0.114 MM	?
1.8:1_SPACING	*	0.136 MM	?
2:1_SPACING	*	0.152 MM	?
2.5:1_SPACING	*	0.190 MM	?
3:1_SPACING	*	0.228 MM	?
4:1_SPACING	*	0.304 MM	?
0P64MM_SPACING	*	0.64 MM	?
0P5MM_SPACING	*	0.5 MM	?
PWR_P1SPACING	*	0.1 MM	900
GND_P1SPACING	*	0.1 MM	950
SWITCHNODE	*	0.5 MM	1000
SWITCHNODE	TOP,BOTTOM	0.2 MM	1000

NOTES:

0.075 MM ~ 3 MIL
0.089 MM ~ 3.5 MIL
0.102 MM ~ 4 MIL
0.114 MM ~ 4.5 MIL
0.125 MM ~ 5 MIL
0.140 MM ~ 5.5 MIL
0.15 MM ~ 6 MIL
0.18 MM ~ 7 MIL
0.2 MM ~ 8 MIL
0.25 MM ~ 10 MIL
0.3 MM ~ 12 MIL
0.33 MM ~ 13 MIL
0.4 MM ~ 16 MIL
1.0 MM = 39.37 MIL

Title: Basenet Report
Design: lost
Date: Feb 19 11:01:06 2008

Base nets and synonyms for lost_lib.LOST(@lost_lib.lost(sch_1))

Base Signal	Synonyms	Location([Zone][dir])
3V1REG_BP	3V1REG_BP - @lost_lib.LOST	36A4
=PP1V05_S0	=PP1V05_S0 - @lost_lib.LOST	15B1 15C1 15D1 17D6
	=PP1V05_S0_CK505 - @lost_lib.LOST	15D7 17D6
	=PP1V05_S0_SPLIT_FET - @lost_lib.LOST	17D6 27C2
	=PP1V05_S0_XDP - @lost_lib.LOST	17D6 90D6
	PP1V05_S0_OUT - @lost_lib.LOST	17D8 21A2
	=PP1V05_S0_SCH - @lost_lib.LOST	8B8 8B8 8C2 8C2 9B1 10C4 10D5 12D8 17D6
	=PP1V05_S0_CPU - @lost_lib.LOST	6A8 6C4 6C4 7D5 17D6
	PP1V05_S0_OUT - @lost_lib.LOST	17D8 21A2
	=PP1V05_S0_XDP - @lost_lib.LOST	17D6 90D6
	=PP1V05_S0_SPLIT_FET - @lost_lib.LOST	17D6 27C2
	=PP1V05_S0_SCH - @lost_lib.LOST	8B8 8B8 8C2 8C2 9B1 10C4 10D5 12D8 17D6
	=PP1V05_S0_CPU - @lost_lib.LOST	6A8 6C4 6C4 7D5 17D6
	=PP1V05_S0_CK505 - @lost_lib.LOST	15D7 17D6
=PP1V05_S0_VTT_C6	=PP1V05_S0_VTT_C6 - @lost_lib.LOST	6B4 6B6 6B8 6C8 6D5 7C6 27B1
	PP1V05_S0_VTT_C6 - @lost_lib.LOST	27C1
=PP1V5_S0_AUD_DIG	=PP1V5_S0_AUD_DIG - @lost_lib.LOST	17C6 36D7
	PP1V5_S0_OUT - @lost_lib.LOST	17C8 27A8 27B4
	=PP1V5_S0_SCH_HDA - @lost_lib.LOST	12A5 17C6
	=PP1V5_S0_CPU - @lost_lib.LOST	7C3 17C6
	=PP1V5_S0_SCH_DPLLB - @lost_lib.LOST	12A1 17C6
	=PP1V5_S0_SCH_AUSBPLL - @lost_lib.LOST	12A3 17C6
	=PP1V5_S0_SCH_HPLL - @lost_lib.LOST	12A3 17C6
	=PP1V5_S0_SCH_USB - @lost_lib.LOST	12C2 17C6
	=PP1V5_S0_SCH_SDVO - @lost_lib.LOST	12C8 17C6
	=PP1V5_S0_SCH_CORE - @lost_lib.LOST	12D2 17C6
	=PP1V5_S0_SCH_LVDS - @lost_lib.LOST	12D8 17C6
	=PP1V5_S0_SCH_PCIE - @lost_lib.LOST	9B3 12C8 17C6
	PP1V5_S0_OUT - @lost_lib.LOST	17C8 27A8 27B4
	=PP1V5_S0_SCH_USB - @lost_lib.LOST	12C2 17C6
	=PP1V5_S0_SCH_SDVO - @lost_lib.LOST	12C8 17C6
	=PP1V5_S0_SCH_PCIE - @lost_lib.LOST	9B3 12C8 17C6
	=PP1V5_S0_SCH_LVDS - @lost_lib.LOST	12D8 17C6
	=PP1V5_S0_SCH_HPLL - @lost_lib.LOST	12A3 17C6
	=PP1V5_S0_SCH_HDA - @lost_lib.LOST	12A5 17C6
	=PP1V5_S0_SCH_DPLLB - @lost_lib.LOST	12A1 17C6
	=PP1V5_S0_SCH_CORE - @lost_lib.LOST	12D2 17C6
	=PP1V5_S0_SCH_AUSBPLL - @lost_lib.LOST	12A3 17C6
	=PP1V5_S0_CPU - @lost_lib.LOST	7C3 17C6
=PP2V5_S0_TVOUT	=PP2V5_S0_TVOUT - @lost_lib.LOST	9A8 17C6 94B4 94D8
	PP2V5_S0_OUT - @lost_lib.LOST	17C8 22C3
=PP3V3_G3H_AVREF_SMC	=PP3V3_G3H_AVREF_SMC - @lost_lib.LOST	17D1 28D4
	=PP3V3_G3H_RTC - @lost_lib.LOST	9C1 9D2 12B5 17D1
	PP3V3_G3H_OUT - @lost_lib.LOST	17D3 29C7
	=PP3V3_G3H_RTC - @lost_lib.LOST	9C1 9D2 12B5 17D1
=PP3V3_S0_AUDIO	=PP3V3_S0_AUDIO - @lost_lib.LOST	17B6 36A6 42B2 42B5 42D3 42D7
	PP3V3_S0_AUDIO - @lost_lib.LOST	17B7
=PP3V42_G3H_3V3	=PP3V42_G3H_3V3 - @lost_lib.LOST	17D1 21C8 29C8
	=PP3V42_G3H_ACC_DET - @lost_lib.LOST	17D1 18B1 18B3 50B8 50C8
	=PP3V42_G3H_SMC - @lost_lib.LOST	51B8 51C8
	=PP3V42_G3H_CHGR - @lost_lib.LOST	17D1 19B4 19B8
	=PP3V42_G3H_USB_DET - @lost_lib.LOST	17D1 18C4 18D3
	PP3V42_G3H_OUT - @lost_lib.LOST	17D3 24C2
	=PP3V42_G3H_DDR - @lost_lib.LOST	17D1 23C8
	=PP3V42_G3H_SMC - @lost_lib.LOST	17D1 28D4 29D5 29D8
	PP3V42_G3H_OUT - @lost_lib.LOST	17D3 24C2
	=PP3V42_G3H_USB_DET - @lost_lib.LOST	17D1 18C4 18D3
	=PP3V42_G3H_SMC - @lost_lib.LOST	17D1 28D4 29D5 29D8
	=PP3V42_G3H_DDR - @lost_lib.LOST	17D1 23C8
	=PP3V42_G3H_CHGR - @lost_lib.LOST	17D1 19B4 19B8
	=PP3V42_G3H_ACC_DET - @lost_lib.LOST	17D1 18B1 18B3 50B8 50C8
	=PP5V_S0_CHGR - @lost_lib.LOST	17A6 19D6
	=PP5V_S0_LED - @lost_lib.LOST	17A6 26C8
	PP5V_S0_OUT - @lost_lib.LOST	17A8 27B8 27C4
	=PP5V_S0_TVOUT - @lost_lib.LOST	17A6 94C3
	=PP5V_S0_VCORE_VDD - @lost_lib.LOST	17A6 20D7
	=PP5V_S0_SCH_5REF - @lost_lib.LOST	12B2 17A6
	PP5V_S0_OUT - @lost_lib.LOST	17A8 27B8 27C4
	=PP5V_S0_VCORE_VDD - @lost_lib.LOST	17A6 20D7
	=PP5V_S0_TVOUT - @lost_lib.LOST	17A6 94C3
	=PP5V_S0_SCH_5REF - @lost_lib.LOST	12B2 17A6
	=PP5V_S0_LED - @lost_lib.LOST	17A6 26C8
=PP5V_S3_FET	=PP5V_S3_FET - @lost_lib.LOST	17C4 27B7 27C6
	=PP5V_S3_MEM_BIAS - @lost_lib.LOST	17C4 23B8 23C5
	PP5V_S3_OUT - @lost_lib.LOST	17C5 22A3
	=PP5V_S3_SCH_REFSUS - @lost_lib.LOST	12B2 17C4
	PP5V_S3_OUT - @lost_lib.LOST	17C5 22A3
	=PP5V_S3_SCH_REFSUS - @lost_lib.LOST	12B2 17C4
	=PP5V_S3_MEM_BIAS - @lost_lib.LOST	17C4 23B8 23C5
=PPBUSA_G3H_1V05	=PPBUSA_G3H_1V05 - @lost_lib.LOST	17C1 21B7
	=PPBUSA_G3H_MEM - @lost_lib.LOST	17C1 23C1
	PPBUSA_G3H - @lost_lib.LOST	17D3 19C1
	=PPBUSA_G3H_VCORE - @lost_lib.LOST	17D1 20C2
	PPBUSA_G3H - @lost_lib.LOST	17D3 19C1
	=PPBUSA_G3H_VCORE - @lost_lib.LOST	17D1 20C2
	=PPBUSA_G3H_MEM - @lost_lib.LOST	17C1 23C1
=PPBUSA_G3H_SNS	=PPBUSA_G3H_SNS - @lost_lib.LOST	17C1 35C3
	PPBUSA_G3H_SNS - @lost_lib.LOST	17C2
=PPBUSB_G3H_3V3	=PPBUSB_G3H_3V3 - @lost_lib.LOST	17C1 21D3
	=PPBUSB_G3H_5V - @lost_lib.LOST	17C1 22B7
	PPBUSB_G3H - @lost_lib.LOST	17C3 19D1
	=PPBUSB_G3H_LED - @lost_lib.LOST	17C1 26D8
	PPBUSB_G3H - @lost_lib.LOST	17C3 19D1
	=PPBUSB_G3H_LED - @lost_lib.LOST	17C1 26D8
	=PPBUSB_G3H_5V - @lost_lib.LOST	17C1 22B7
=PPMEMV_S3_1V5_FET	=PPMEMV_S3_1V5_FET - @lost_lib.LOST	17D4 27B6
	=PPMEMV_S3_WL - @lost_lib.LOST	17D4 96C5
	PPMEMV_S3_OUT - @lost_lib.LOST	17D5 23B1 23B4 23C4 23D6
	=PPMEMV_S3_MEM - @lost_lib.LOST	11C1 14A5 14B4 14B8 14D4 14D8 17D4
	=PPMEMV_S3_SCH - @lost_lib.LOST	12B8 17D4
	PPMEMV_S3_OUT - @lost_lib.LOST	17D5 23B1 23B4 23C4 23D6
	=PPMEMV_S3_WL - @lost_lib.LOST	17D4 96C5
	=PPMEMV_S3_SCH - @lost_lib.LOST	12B8 17D4
	=PPMEMV_S3_MEM - @lost_lib.LOST	11C1 14A5 14B4 14B8 14D4 14D8 17D4
=PPMEM_S0_VTT_SCH	=PPMEM_S0_VTT_SCH - @lost_lib.LOST	11B3 17C6
	PPMEM_S0_VREF - @lost_lib.LOST	17C8 23C4
=PPVCORE_S0_CPU	=PPVCORE_S0_CPU - @lost_lib.LOST	7D4 17D6
	PPVCORE_OUT - @lost_lib.LOST	17D8 20C1
=SMB_CPUZONE_THRM_CLK	=SMB_CPUZONE_THRM_CLK - @lost_lib.LOST	35D4 43B4
	SMB_0_S0_CLK - @lost_lib.LOST	28C8 43B6
	SMBUS_SMC_B_S0_SCL - @lost_lib.LOST	43B5 103B1
	=I2C_SMS_SCL - @lost_lib.LOST	34B4 43B4
	=SMB_CPU_THRM_SCL - @lost_lib.LOST	43B4 43C3
	SMB_0_S0_CLK - @lost_lib.LOST	28C8 43B6
	SMBUS_SMC_B_S0_SCL - @lost_lib.LOST	43B5 103B1
	=I2C_SMS_SCL - @lost_lib.LOST	34B4 43B4
=SMB_CPUZONE_THRM_DATA	=SMB_CPUZONE_THRM_DATA - @lost_lib.LOST	35D4 43B4
	SMB_0_S0_DATA - @lost_lib.LOST	28C5 43B6
	SMBUS_SMC_B_S0_SDA - @lost_lib.LOST	43B5 103B1
	=I2C_SMS_SDA - @lost_lib.LOST	34B4 43A4
	=SMB_CPU_THRM_SDA - @lost_lib.LOST	43B4 43C3
	SMB_0_S0_DATA - @lost_lib.LOST	28C5 43B6
	SMBUS_SMC_B_S0_SDA - @lost_lib.LOST	43B5 103B1
	=I2C_SMS_SDA - @lost_lib.LOST	34B4 43A4
A1010_BIAS_VCM	A1010_BIAS_VCM - @lost_lib.LOST	76B5
A1010_LDO_EN_L	A1010_LDO_EN_L - @lost_lib.LOST	76C7
A1010_OUTN	A1010_OUTN - @lost_lib.LOST	76C5
A1010_OUTP	A1010_OUTP - @lost_lib.LOST	76C5
A1010_REFN	A1010_REFN - @lost_lib.LOST	76C5
A1010_REFP	A1010_REFP - @lost_lib.LOST	76C5
ACCA_DET_L	ACCA_DET_L - @lost_lib.LOST	52C6
ACCB_DET_L	ACCB_DET_L - @lost_lib.LOST	52B6
ACC_IDENTIFY_A	ACC_IDENTIFY_A - @lost_lib.LOST	50C7
ACC_IDENTIFY_B	ACC_IDENTIFY_B - @lost_lib.LOST	51C7
ACC_IDENTIFY_DOCKA	ACC_IDENTIFY_DOCKA - @lost_lib.LOST	5B6 50C3 50C6
ACC_IDENTIFY_DOCKB	ACC_IDENTIFY_DOCKB - @lost_lib.LOST	5B7 51C1 51C6
ACC_TO_DEV_EXTCONA	ACC_TO_DEV_EXTCONA - @lost_lib.LOST	5A6 50B1 50B6
ACC_TO_DEV_EXTCONB	ACC_TO_DEV_EXTCONB - @lost_lib.LOST	5A7 51B6 51C3
AC_G3H_3V42_FB_LOW	AC_G3H_3V42_FB_LOW - @lost_lib.LOST	24B4
AC_G3H_3V42_FB_LOW_G	AC_G3H_3V42_FB_LOW_G - @lost_lib.LOST	24B3
AGND	AGND - @lost_lib.LOST	30A4
ALC_BITCLK	ALC_BITCLK - @lost_lib.LOST	103C1
ALC_RST_L	ALC_RST_L - @lost_lib.LOST	103C1
ALC_SDATAOUT	ALC_SDATAOUT - @lost_lib.LOST	103C1
ALC_SYNC	ALC_SYNC - @lost_lib.LOST	103C1
ALL_SYS_PWRGD	ALL_SYS_PWRGD - @lost_lib.LOST	21A7 22C7 27A4 28D8
ANALOG_DAC_OUT_N	ANALOG_DAC_OUT_N - @lost_lib.LOST	76C5
ANALOG_DAC_OUT_P	ANALOG_DAC_OUT_P - @lost_lib.LOST	76C5
ANALOG_MIC_N	ANALOG_MIC_N - @lost_lib.LOST	38B1 76C8
ANALOG_MIC_P	ANALOG_MIC_P - @lost_lib.LOST	38B1 76C8
AUD_3V_REG_IN	AUD_3V_REG_IN - @lost_lib.LOST	36A5
AUD_3V_SHDN_L	AUD_3V_SHDN_L - @lost_lib.LOST	36A5
AUD_A1010_24MHZ_CLK	AUD_A1010_24MHZ_CLK - @lost_lib.LOST	76C7
AUD_A1010_I2C_CLK	AUD_A1010_I2C_CLK - @lost_lib.LOST	76C1
AUD_A1010_I2C_DATA	AUD_A1010_I2C_DATA - @lost_lib.LOST	76C1
AUD_A1010_INT	AUD_A1010_INT - @lost_lib.LOST	10B4 10D3 76B1
AUD_A1010_INT_R	AUD_A1010_INT_R - @lost_lib.LOST	76B4
AUD_A1010_LDO_ENL	AUD_A1010_LDO_ENL - @lost_lib.LOST	76A4 76C6
AUD_A1010_LDO_IN	AUD_A1010_LDO_IN - @lost_lib.LOST	76D7
AUD_A1010_RSTN	AUD_A1010_RSTN - @lost_lib.LOST	76C6
AUD_A1010_WAKE_L	AUD_A1010_WAKE_L - @lost_lib.LOST	10B4 10C2 76C1
AUD_A1010_WAKE_N_R	AUD_A1010_WAKE_N_R - @lost_lib.LOST	76C4
AUD_AUDIENCE_AGND	AUD_AUDIENCE_AGND - @lost_lib.LOST	76B3 76C1 76C5 76D1
AUD_AUDIENCE_OUTN	AUD_AUDIENCE_OUTN - @lost_lib.LOST	40C3 76B7 76C8
AUD_AUDIENCE_OUTP	AUD_AUDIENCE_OUTP - @lost_lib.LOST	40C3 76B7 76C8
AUD_BI_PORT_A_L	AUD_BI_PORT_A_L - @lost_lib.LOST	103C1
AUD_BI_PORT_A_R	AUD_BI_PORT_A_R - @lost_lib.LOST	103C1
AUD_CODEC_INL1_C	AUD_CODEC_INL1_C - @lost_lib.LOST	40C6
AUD_CODEC_INL2_C	AUD_CODEC_INL2_C - @lost_lib.LOST	40C6
AUD_CODEC_INR1_C	AUD_CODEC_INR1_C - @lost_lib.LOST	40B6
AUD_CODEC_INR2_C	AUD_CODEC_INR2_C - @lost_lib.LOST	40B6
AUD_CODEC_MB_GPO	AUD_CODEC_MB_GPO - @lost_lib.LOST	36C2 38B1 76C7
AUD_DMIC_DATA_CON	AUD_DMIC_DATA_CON - @lost_lib.LOST	5C6
AUD_DM_CLK	AUD_DM_CLK - @lost_lib.LOST	5C6
AUD_GPIO_0	AUD_GPIO_0 - @lost_lib.LOST	36D7 42A2 42A5
AUD_GPIO_1	AUD_GPIO_1 - @lost_lib.LOST	36C7 38C8
AUD_GPIO_2	AUD_GPIO_2 - @lost_lib.LOST	36C7 37B7
AUD_GPIO_3	AUD_GPIO_3 - @lost_lib.LOST	36C7 40B4
AUD_HP1_DET_H	AUD_HP1_DET_H - @lost_lib.LOST	5C6 41C4 42C4
AUD_HP1_DET_L	AUD_HP1_DET_L - @lost_lib.LOST	42D2
AUD_HP1_DET_RC	AUD_HP1_DET_RC - @lost_lib.LOST	42C3
AUD_HP2_DET_H	AUD_HP2_DET_H - @lost_lib.LOST	5B6 41B4 42C7
AUD_HP2_DET_L	AUD_HP2_DET_L - @lost_lib.LOST	42D5
AUD_HP2_DET_RC	AUD_HP2_DET_RC - @lost_lib.LOST	42C6
AUD_HPAMP_GND	AUD_HPAMP_GND - @lost_lib.LOST	5C6
AUD_HPAMP_INPUT_L	AUD_HPAMP_INPUT_L - @lost_lib.LOST	38B7 38C7
AUD_HPAMP_INPUT_R	AUD_HPAMP_INPUT_R - @lost_lib.LOST	38A7 38C7
AUD_HPAMP_L_C	AUD_HPAMP_L_C - @lost_lib.LOST	38B7
AUD_HPAMP_OUTPUT_L	AUD_HPAMP_OUTPUT_L - @lost_lib.LOST	5C6 38B5 38C4 41C4
AUD_HPAMP_OUTPUT_R	AUD_HPAMP_OUTPUT_R - @lost_lib.LOST	5C6 38A5 38C4 41C4
AUD_HPAMP_R_C	AUD_HPAMP_R_C - @lost_lib.LOST	38A7
AUD_HP_PORT_L	AUD_HP_PORT_L - @lost_lib.LOST	5B6 36D2 39A7 41B4
AUD_HP_PORT_R	AUD_HP_PORT_R - @lost_lib.LOST	5B6 36D2 39A7 41B4
AUD_HP_PORT_REF	AUD_HP_PORT_REF - @lost_lib.LOST	36D2 39C1
AUD_I2C_INT_HS1_L	AUD_I2C_INT_HS1_L - @lost_lib.LOST	10B4 10D3 42B2
AUD_I2C_INT_HS2_L	AUD_I2C_INT_HS2_L - @lost_lib.LOST	10B4 10D3 42B5
AUD_INTMIC_BIAS	AUD_INTMIC_BIAS - @lost_lib.LOST	38B3
AUD_LI1_L	AUD_LI1_L - @lost_lib.LOST	39C5 40C8
AUD_LI1_R	AUD_LI1_R - @lost_lib.LOST	39B5 40B8
AUD_LI1_REF	AUD_LI1_REF - @lost_lib.LOST	39B5 40C8
AUD_LI2_L	AUD_LI2_L - @lost_lib.LOST	39C2 40C8
AUD_LI2_R	AUD_LI2_R - @lost_lib.LOST	39C2 40B8
AUD_LI2_REF	AUD_LI2_REF - @lost_lib.LOST	39B2 40C8
	AUD_LI_MIX_REF - @lost_lib.LOST	40C6
AUD_LI_PORTSW_N_L	AUD_LI_PORTSW_N_L - @lost_lib.LOST	40C3 40C5
AUD_LI_PORTSW_P_L	AUD_LI_PORTSW_P_L - @lost_lib.LOST	40C3 40C5
AUD_LI_PORT_N_L	AUD_LI_PORT_N_L - @lost_lib.LOST	36C2 40C1
AUD_LI_PORT_N_R	AUD_LI_PORT_N_R - @lost_lib.LOST	36C2 40C5
AUD_LI_PORT_P_L	AUD_LI_PORT_P_L - @lost_lib.LOST	36C2 40C1
AUD_LI_PORT_P_R	AUD_LI_PORT_P_R - @lost_lib.LOST	36C2 40B5
AUD_LO1_L	AUD_LO1_L - @lost_lib.LOST	39A5 39D5
AUD_LO1_PORT_N_L	AUD_LO1_PORT_N_L - @lost_lib.LOST	36C2 38B7
AUD_LO1_PORT_N_R	AUD_LO1_PORT_N_R - @lost_lib.LOST	36C2 38B7
AUD_LO1_PORT_P_L	AUD_LO1_PORT_P_L - @lost_lib.LOST	36D2 38B7
AUD_LO1_PORT_P_R	AUD_LO1_PORT_P_R - @lost_lib.LOST	36C2 38A7
AUD_LO1_R	AUD_LO1_R - @lost_lib.LOST	39A5 39D5
AUD_LO1_RET	AUD_LO1_RET - @lost_lib.LOST	39A5 39C5
AUD_LO2_L	AUD_LO2_L - @lost_lib.LOST	39A5 39D1
AUD_LO2_PORT_N_L	AUD_LO2_PORT_N_L - @lost_lib.LOST	36C2 37B7
AUD_LO2_PORT_N_R	AUD_LO2_PORT_N_R - @lost_lib.LOST	36C2 37B7
AUD_LO2_PORT_P_L	AUD_LO2_PORT_P_L - @lost_lib.LOST	36C2 37B7 76B7
AUD_LO2_PORT_P_R	AUD_LO2_PORT_P_R - @lost_lib.LOST	36C2 37B7 76B7
AUD_LO2_R	AUD_LO2_R - @lost_lib.LOST	39A5 39D1
AUD_LO2_RET	AUD_LO2_RET - @lost_lib.LOST	39A5 39C1
AUD_MIC1_HI	AUD_MIC1_HI - @lost_lib.LOST	5C6 41C4 42B4
AUD_MIC1_LO	AUD_MIC1_LO - @lost_lib.LOST	5C6 41C4 42B4
AUD_MIC2_HI	AUD_MIC2_HI - @lost_lib.LOST	5B6 41B4 42B8
AUD_MIC2_LO	AUD_MIC2_LO - @lost_lib.LOST	5B6 41B4 42B8
AUD_MIC_HI	AUD_MIC_HI - @lost_lib.LOST	38B3 38C3
AUD_MIC_INN_L	AUD_MIC_INN_L - @lost_lib.LOST	36C2 42B5
AUD_MIC_INN_R	AUD_MIC_INN_R - @lost_lib.LOST	36C2 42B2
AUD_MIC_INP_L	AUD_MIC_INP_L - @lost_lib.LOST	36C2 42B5
AUD_MIC_INP_R	AUD_MIC_INP_R - @lost_lib.LOST	36C2 42B2
AUD_MIC_LO	AUD_MIC_LO - @lost_lib.LOST	38B3 38C3
AUD_SDI_R	AUD_SDI_R - @lost_lib.LOST	36C6 103C1
AUD_SENSE_A	AUD_SENSE_A - @lost_lib.LOST	36C7 42D4 42D7
AUD_SPDIF_O	AUD_SPDIF_O - @lost_lib.LOST	103C1
AUD_SPKR_AMP_3V3	AUD_SPKR_AMP_3V3 - @lost_lib.LOST	37B6
AUD_VID_RET_EXTCONNA	AUD_VID_RET_EXTCONNA - @lost_lib.LOST	5B6 50B1 50C1
AUD_VID_RET_EXTCONNB	AUD_VID_RET_EXTCONNB - @lost_lib.LOST	5B7 51B1 51C3
AUD_VOL_DOWN_L	AUD_VOL_DOWN_L - @lost_lib.LOST	5A6 10B4 10D3 54C3
BATT_CHGR_DIFF	BATT_CHGR_DIFF - @lost_lib.LOST	19B4
BATT_CHGR_DIFF_FBK	BATT_CHGR_DIFF_FBK - @lost_lib.LOST	19B4
BATT_CHGR_DIFF_N	BATT_CHGR_DIFF_N - @lost_lib.LOST	19B3
BATT_CHGR_GATE	BATT_CHGR_GATE - @lost_lib.LOST	19B2
BATT_CHGR_SOURCE	BATT_CHGR_SOURCE - @lost_lib.LOST	19C3
BATT_CHG_PD	BATT_CHG_PD - @lost_lib.LOST	19B1
BATT_CURR_EN	BATT_CURR_EN - @lost_lib.LOST	19B4
BATT_CURR_N	BATT_CURR_N - @lost_lib.LOST	19C4
BATT_CURR_P	BATT_CURR_P - @lost_lib.LOST	19B4
BATT_CURR_REF	BATT_CURR_REF - @lost_lib.LOST	19B3
BATT_CURR_RG	BATT_CURR_RG - @lost_lib.LOST	19C3
BATT_ISET	BATT_ISET - @lost_lib.LOST	19A4
BATT_NEG	BATT_NEG - @lost_lib.LOST	5D6 19A6
BATT_POS	BATT_POS - @lost_lib.LOST	5D6 19A6 19C1 24B7
BATT_POS_F	BATT_POS_F - @lost_lib.LOST	19A6
BATT_TRK_DIFF_EN	BATT_TRK_DIFF_EN - @lost_lib.LOST	19A3
BATT_TRK_DIFF_FBK	BATT_TRK_DIFF_FBK - @lost_lib.LOST	19B2
BAT_G3H_3V42_FB	BAT_G3H_3V42_FB - @lost_lib.LOST	24B5
BAT_G3H_3V42_GND	BAT_G3H_3V42_GND - @lost_lib.LOST	24A5
BAT_G3H_3V42_SHDN_L	BAT_G3H_3V42_SHDN_L - @lost_lib.LOST	24B6
BAT_G3H_3V42_SW1	BAT_G3H_3V42_SW1 - @lost_lib.LOST	24B5
BAT_G3H_3V42_SW2	BAT_G3H_3V42_SW2 - @lost_lib.LOST	24B5
BOOST_EN	BOOST_EN - @lost_lib.LOST	30A4 31C5
BOOST_FBK	BOOST_FBK - @lost_lib.LOST	30A4
BOOST_L	BOOST_L - @lost_lib.LOST	30B5
BOOST_SW	BOOST_SW - @lost_lib.LOST	30B4
BOOT_CFG1_R	BOOT_CFG1_R - @lost_lib.LOST	31B7
	PP3V3_S3_S0_GRAPE - @lost_lib.LOST	30A1 30A4 30D4 30D6 30D7 31B8 31C2 31C5 31D2 31D3 31D5 31D5
BT_HOST_WAKE	BT_HOST_WAKE - @lost_lib.LOST	28A8 96B6
BT_RESET_L	BT_RESET_L - @lost_lib.LOST	28D5 96B6
BUF_CVBS_PB	BUF_CVBS_PB - @lost_lib.LOST	75C6 101B7
BUF_C_Y	BUF_C_Y - @lost_lib.LOST	75C6 101B7
BUF_Y_PR	BUF_Y_PR - @lost_lib.LOST	75B6 101B7
CE_L<0>	CE_L<0> - @lost_lib.LOST	67B6
CE_L<1>	CE_L<1> - @lost_lib.LOST	67B3
CE_L<2>	CE_L<2> - @lost_lib.LOST	67B6
CE_L<3>	CE_L<3> - @lost_lib.LOST	67B3
CE_L<4>	CE_L<4> - @lost_lib.LOST	67B6
CE_L<5>	CE_L<5> - @lost_lib.LOST	67B3
CE_L<6>	CE_L<6> - @lost_lib.LOST	67B6
CE_L<7>	CE_L<7> - @lost_lib.LOST	67B3
CHGR_BG2	CHGR_BG2 - @lost_lib.LOST	19C5
CHGR_BOOST	CHGR_BOOST - @lost_lib.LOST	19D5
CHGR_FB	CHGR_FB - @lost_lib.LOST	19C6
CHGR_INTVCC	CHGR_INTVCC - @lost_lib.LOST	19D6 19D7
CHGR_ITH	CHGR_ITH - @lost_lib.LOST	19C6
CHGR_MODE	CHGR_MODE - @lost_lib.LOST	19C6
CHGR_PLLFLTR	CHGR_PLLFLTR - @lost_lib.LOST	19C6
CHGR_RUN	CHGR_RUN - @lost_lib.LOST	19C6
CHGR_SS	CHGR_SS - @lost_lib.LOST	19C6
CHGR_SW2	CHGR_SW2 - @lost_lib.LOST	19C5
CHGR_TG2	CHGR_TG2 - @lost_lib.LOST	19C5
CHGR_VIN	CHGR_VIN - @lost_lib.LOST	19A8 19D7
CHGR_VIN_D	CHGR_VIN_D - @lost_lib.LOST	19D5
CHRONTEL2SCH_TVCLK_N	CHRONTEL2SCH_TVCLK_N - @lost_lib.LOST	9B2 94B8 101B4
	SDVOB_TVCLKIN_N - @lost_lib.LOST	9B4 101C4
CHRONTEL2SCH_TVCLK_P	CHRONTEL2SCH_TVCLK_P - @lost_lib.LOST	9C2 94B8 101B4
	SDVOB_TVCLKIN_P - @lost_lib.LOST	9C4 101C4
CK505_25MHZ_SE1	CK505_25MHZ_SE1 - @lost_lib.LOST	15C4 16B5 105C2
	AUD_A1010_25MHZ_CLK - @lost_lib.LOST	16B3
CK505_25MHZ_SE2	CK505_25MHZ_SE2 - @lost_lib.LOST	15B4
CK505_CPU0_N	CK505_CPU0_N - @lost_lib.LOST	15B6 16D5
	FSB_CLK_CPU_N - @lost_lib.LOST	6B6 16D3 105D2
CK505_CPU0_P	CK505_CPU0_P - @lost_lib.LOST	15B6 16D5
	FSB_CLK_CPU_P - @lost_lib.LOST	6B6 16D3 105D2
CK505_CPU1_N	CK505_CPU1_N - @lost_lib.LOST	15B6 16D5
	FSB_CLK_SCH_N - @lost_lib.LOST	8C4 16D3 105D2
CK505_CPU1_P	CK505_CPU1_P - @lost_lib.LOST	15B6 16D5
	FSB_CLK_SCH_P - @lost_lib.LOST	8C4 16D3 105D2
CK505_CPU_ITP_N	CK505_CPU_ITP_N - @lost_lib.LOST	15B4 16D5
	XDP_CLK_N - @lost_lib.LOST	16D3 90C3 105D2
CK505_CPU_ITP_P	CK505_CPU_ITP_P - @lost_lib.LOST	15B4 16D5
	XDP_CLK_P - @lost_lib.LOST	16D3 90C3 105D2
CK505_FSB_TESTMODE	CK505_FSB_TESTMODE - @lost_lib.LOST	15C2 15C6
CK505_PCI1_CLKREQ_B_L	CK505_PCI1_CLKREQ_B_L - @lost_lib.LOST	15B6
CK505_PCI2_TME	CK505_PCI2_TME - @lost_lib.LOST	15A7 15B6
CK505_PCI4_SRC5EN	CK505_PCI4_SRC5EN - @lost_lib.LOST	15A7 15B6
CK505_PCI5_ITPEN	CK505_PCI5_ITPEN - @lost_lib.LOST	15A7 15B6
CK505_PD_VTT_PWRGD	CK505_PD_VTT_PWRGD - @lost_lib.LOST	15A4 15B6
	VR_PWRGD_CLKEN - @lost_lib.LOST	15A2 20A8
CK505_REF_FSC_TESTSEL	CK505_REF_FSC_TESTSEL - @lost_lib.LOST	15B2 15B6 105C2
CK505_SRC0_N	CK505_SRC0_N - @lost_lib.LOST	15C4 16B5
	SCH_CLK_DREFCLKIN_N - @lost_lib.LOST	10A5 16B3 105D2
CK505_SRC0_P	CK505_SRC0_P - @lost_lib.LOST	15C4 16B5
	SCH_CLK_DREFCLKIN_P - @lost_lib.LOST	10A5 16B3 105D2
CK505_SRC2_N	CK505_SRC2_N - @lost_lib.LOST	15B4 16C5
	PCIE_CLK_100M_N - @lost_lib.LOST	9B4 16C3 105C2
CK505_SRC2_P	CK505_SRC2_P - @lost_lib.LOST	15B4 16C5
	PCIE_CLK_100M_P - @lost_lib.LOST	9B4 16C3 105C2
CK505_SRC11_N	CK505_SRC11_N - @lost_lib.LOST	15B4 16A5
	SCH_CLK_DREFSSCLKIN_N - @lost_lib.LOST	10A5 16A3 105D2
CK505_SRC11_P	CK505_SRC11_P - @lost_lib.LOST	15B4 16A5
	SCH_CLK_DREFSSCLKIN_P - @lost_lib.LOST	10A5 16A3 105D2
CK505_USB0_FSA	CK505_USB0_FSA - @lost_lib.LOST	15B6 15C2 105C2
CK505_XI	CK505_XI - @lost_lib.LOST	15C6
CK505_XO	CK505_XO - @lost_lib.LOST	15C6
CLK_LPC_0	CLK_LPC_0 - @lost_lib.LOST	9D6 9D7 105C2
CLK_SCH_OE_L	CLK_SCH_OE_L - @lost_lib.LOST	10A5 16A5
	CK505_PCI0_CLKREQ_A_L - @lost_lib.LOST	15B6 16A3
COMP_R	COMP_R - @lost_lib.LOST	26C4
CPU_A20M_L	CPU_A20M_L - @lost_lib.LOST	6B7 100B3
CPU_BSEL<0>	CPU_BSEL<0> - @lost_lib.LOST	6A4 15C2 100B3
CPU_BSEL<1>	CPU_BSEL<1> - @lost_lib.LOST	6A4 15C2

FFLAG_R	FFLAG_R - @lost_lib.LOST	26C5
FILT_CVBS_PB	FILT_CVBS_PB - @lost_lib.LOST	101A7
FILT_C_Y	FILT_C_Y - @lost_lib.LOST	101A7
FILT_Y_PR	FILT_Y_PR - @lost_lib.LOST	101A7
FIL_CVBS_PB	FIL_CVBS_PB - @lost_lib.LOST	75C5
FIL_C_Y	FIL_C_Y - @lost_lib.LOST	75C4
FIL_Y_PR	FIL_Y_PR - @lost_lib.LOST	75B4
FLASH_AD<0>	FLASH_AD<0> - @lost_lib.LOST	66C4 67C7
FLASH_AD<1>	FLASH_AD<1> - @lost_lib.LOST	66C4 67C7
FLASH_AD<2>	FLASH_AD<2> - @lost_lib.LOST	66C4 67C7
FLASH_AD<3>	FLASH_AD<3> - @lost_lib.LOST	66C4 67C7
FLASH_AD<4>	FLASH_AD<4> - @lost_lib.LOST	66C4 67C7
FLASH_AD<5>	FLASH_AD<5> - @lost_lib.LOST	66C4 67C7
FLASH_AD<6>	FLASH_AD<6> - @lost_lib.LOST	66C4 67C7
FLASH_AD<7>	FLASH_AD<7> - @lost_lib.LOST	66C4 67C7
FLASH_AD<8>	FLASH_AD<8> - @lost_lib.LOST	66C4 67C4
FLASH_AD<9>	FLASH_AD<9> - @lost_lib.LOST	66C4 67C4
FLASH_AD<10>	FLASH_AD<10> - @lost_lib.LOST	66C4 67C4
FLASH_AD<11>	FLASH_AD<11> - @lost_lib.LOST	66C4 67C4
FLASH_AD<12>	FLASH_AD<12> - @lost_lib.LOST	66C4 67C4
FLASH_AD<13>	FLASH_AD<13> - @lost_lib.LOST	66C4 67C4
FLASH_AD<14>	FLASH_AD<14> - @lost_lib.LOST	66C4 67C4
FLASH_AD<15>	FLASH_AD<15> - @lost_lib.LOST	66C4 67C4
FLASH_ALE	FLASH_ALE - @lost_lib.LOST	66B4 67B4 67B7
FLASH_CE_L<0>	FLASH_CE_L<0> - @lost_lib.LOST	66C4 67B8
FLASH_CE_L<1>	FLASH_CE_L<1> - @lost_lib.LOST	66C4 67B5
FLASH_CE_L<2>	FLASH_CE_L<2> - @lost_lib.LOST	66C4 67B8
FLASH_CE_L<3>	FLASH_CE_L<3> - @lost_lib.LOST	66C4 67B5
FLASH_CE_L<4>	FLASH_CE_L<4> - @lost_lib.LOST	66B6 67B8
FLASH_CE_L<5>	FLASH_CE_L<5> - @lost_lib.LOST	66B6 67B5
FLASH_CE_L<6>	FLASH_CE_L<6> - @lost_lib.LOST	66B6 67B8
FLASH_CE_L<7>	FLASH_CE_L<7> - @lost_lib.LOST	66B6 67B5
FLASH_CLE	FLASH_CLE - @lost_lib.LOST	66B4 67B4 67B7
FLASH_FRDY<0>	FLASH_FRDY<0> - @lost_lib.LOST	66B4 67B5 67B8
FLASH_FRDY<1>	FLASH_FRDY<1> - @lost_lib.LOST	66B2 66B6 67B5 67B8
FLASH_LED	FLASH_LED - @lost_lib.LOST	66B6
FLASH_RESET_L	FLASH_RESET_L - @lost_lib.LOST	66C2 66C6
FLASH_RE_L	FLASH_RE_L - @lost_lib.LOST	66B4 67B4 67B7
FLASH_RREF	FLASH_RREF - @lost_lib.LOST	66B2 66C6
FLASH_TEST	FLASH_TEST - @lost_lib.LOST	66B2 66C6
FLASH_WE_L	FLASH_WE_L - @lost_lib.LOST	66B4 67B4 67B7
FLASH_WP_L	FLASH_WP_L - @lost_lib.LOST	66B4 67B4 67B7
FSB_ADSTB_L<0>	FSB_ADSTB_L<0> - @lost_lib.LOST	6C7 8C4 100C3
FSB_ADSTB_L<1..0>	FSB_ADSTB_L<1..0> - @lost_lib.LOST	5D7
FSB_ADSTB_L<1>	FSB_ADSTB_L<1> - @lost_lib.LOST	6C7 8C4 100C3
FSB_ADS_L	FSB_ADS_L - @lost_lib.LOST	5D7 6D6 8C4 100D3
FSB_A_L<3>	FSB_A_L<3> - @lost_lib.LOST	6D7 8D4
FSB_A_L<16..3>	FSB_A_L<16..3> - @lost_lib.LOST	100C3
	FSB_A_L<31..3> - @lost_lib.LOST	5D7
FSB_A_L<31..3>	FSB_A_L<31..3> - @lost_lib.LOST	5D7
	FSB_A_L<35..17> - @lost_lib.LOST	100C3
FSB_A_L<4>	FSB_A_L<4> - @lost_lib.LOST	6D7 8D4
FSB_A_L<5>	FSB_A_L<5> - @lost_lib.LOST	6D7 8D4
FSB_A_L<6>	FSB_A_L<6> - @lost_lib.LOST	6D7 8D4
FSB_A_L<7>	FSB_A_L<7> - @lost_lib.LOST	6D7 8D4
FSB_A_L<8>	FSB_A_L<8> - @lost_lib.LOST	6D7 8D4
FSB_A_L<9>	FSB_A_L<9> - @lost_lib.LOST	6D7 8D4
FSB_A_L<10>	FSB_A_L<10> - @lost_lib.LOST	6D7 8D4
FSB_A_L<11>	FSB_A_L<11> - @lost_lib.LOST	6D7 8D4
FSB_A_L<12>	FSB_A_L<12> - @lost_lib.LOST	6D7 8D4
FSB_A_L<13>	FSB_A_L<13> - @lost_lib.LOST	6D7 8D4
FSB_A_L<14>	FSB_A_L<14> - @lost_lib.LOST	6D7 8D4
FSB_A_L<15>	FSB_A_L<15> - @lost_lib.LOST	6C7 8D4
FSB_A_L<16>	FSB_A_L<16> - @lost_lib.LOST	6C7 8D4
FSB_A_L<17>	FSB_A_L<17> - @lost_lib.LOST	6C7 8D4
FSB_A_L<35..17>	FSB_A_L<35..17> - @lost_lib.LOST	100C3
FSB_A_L<18>	FSB_A_L<18> - @lost_lib.LOST	6C7 8C4
FSB_A_L<19>	FSB_A_L<19> - @lost_lib.LOST	6C7 8C4
FSB_A_L<20>	FSB_A_L<20> - @lost_lib.LOST	6C7 8C4
FSB_A_L<21>	FSB_A_L<21> - @lost_lib.LOST	6C7 8C4
FSB_A_L<22>	FSB_A_L<22> - @lost_lib.LOST	6C7 8C4
FSB_A_L<23>	FSB_A_L<23> - @lost_lib.LOST	6C7 8C4
FSB_A_L<24>	FSB_A_L<24> - @lost_lib.LOST	6C7 8C4
FSB_A_L<25>	FSB_A_L<25> - @lost_lib.LOST	6C7 8C4
FSB_A_L<26>	FSB_A_L<26> - @lost_lib.LOST	6C7 8C4
FSB_A_L<27>	FSB_A_L<27> - @lost_lib.LOST	6C7 8C4
FSB_A_L<28>	FSB_A_L<28> - @lost_lib.LOST	6C7 8C4
FSB_A_L<29>	FSB_A_L<29> - @lost_lib.LOST	6C7 8C4
FSB_A_L<30>	FSB_A_L<30> - @lost_lib.LOST	6C7 8C4
FSB_A_L<31>	FSB_A_L<31> - @lost_lib.LOST	6C7 8C4
FSB_BNR_L	FSB_BNR_L - @lost_lib.LOST	5D7 6D6 8C4 100D3
FSB_BPRI_L	FSB_BPRI_L - @lost_lib.LOST	5D7 6D6 8C4 100D3
FSB_BREQ0_L	FSB_BREQ0_L - @lost_lib.LOST	6D6 8C4 100D3
FSB_CGVREF	FSB_CGVREF - @lost_lib.LOST	8C4
FSB_CPURST_L	FSB_CPURST_L - @lost_lib.LOST	6C6 8C4 90B2 100D3
FSB_CPUSLP_L	FSB_CPUSLP_L - @lost_lib.LOST	5C7 6A2 8A4 100B3
FSB_DBSY_L	FSB_DBSY_L - @lost_lib.LOST	5D7 6D6 8B4 100D3
FSB_DEFER_L	FSB_DEFER_L - @lost_lib.LOST	5D7 6D6 8B4 100D3
FSB_DINV_L<0>	FSB_DINV_L<0> - @lost_lib.LOST	6C4 8B4 100D3
FSB_DINV_L<3..0>	FSB_DINV_L<3..0> - @lost_lib.LOST	5C7
FSB_DINV_L<1>	FSB_DINV_L<1> - @lost_lib.LOST	6B4 8B4 100C3
FSB_DINV_L<2>	FSB_DINV_L<2> - @lost_lib.LOST	6C2 8B4 100C3
FSB_DINV_L<3>	FSB_DINV_L<3> - @lost_lib.LOST	6B2 8B4 100C3
FSB_DPWR_L	FSB_DPWR_L - @lost_lib.LOST	5C7 6A2 8B4 100D3
FSB_DRDY_L	FSB_DRDY_L - @lost_lib.LOST	5D7 6D6 8B4 100D3
FSB_DSTB_L_N<0>	FSB_DSTB_L_N<0> - @lost_lib.LOST	6C4 8B4 100C3
FSB_DSTB_L_N<3..0>	FSB_DSTB_L_N<3..0> - @lost_lib.LOST	5C7
FSB_DSTB_L_N<1>	FSB_DSTB_L_N<1> - @lost_lib.LOST	6B4 8B4 100C3
FSB_DSTB_L_N<2>	FSB_DSTB_L_N<2> - @lost_lib.LOST	6C2 8B4 100C3
FSB_DSTB_L_N<3>	FSB_DSTB_L_N<3> - @lost_lib.LOST	6B2 8B4 100C3
FSB_DSTB_L_P<0>	FSB_DSTB_L_P<0> - @lost_lib.LOST	6C4 8B4 100C3
FSB_DSTB_L_P<3..0>	FSB_DSTB_L_P<3..0> - @lost_lib.LOST	5C7
FSB_DSTB_L_P<1>	FSB_DSTB_L_P<1> - @lost_lib.LOST	6B4 8B4 100C3
FSB_DSTB_L_P<2>	FSB_DSTB_L_P<2> - @lost_lib.LOST	6C2 8B4 100C3
FSB_DSTB_L_P<3>	FSB_DSTB_L_P<3> - @lost_lib.LOST	6B2 8B4 100C3
FSB_D_L<0>	FSB_D_L<0> - @lost_lib.LOST	6C4 8D6
FSB_D_L<15..0>	FSB_D_L<15..0> - @lost_lib.LOST	100D3
	FSB_D_L<63..0> - @lost_lib.LOST	5C7
FSB_D_L<63..0>	FSB_D_L<63..0> - @lost_lib.LOST	5C7
	FSB_D_L<63..48> - @lost_lib.LOST	100C3
FSB_D_L<1>	FSB_D_L<1> - @lost_lib.LOST	6C4 8D6
FSB_D_L<2>	FSB_D_L<2> - @lost_lib.LOST	6C4 8D6
FSB_D_L<3>	FSB_D_L<3> - @lost_lib.LOST	6C4 8D6
FSB_D_L<4>	FSB_D_L<4> - @lost_lib.LOST	6C4 8D6
FSB_D_L<5>	FSB_D_L<5> - @lost_lib.LOST	6C4 8D6
FSB_D_L<6>	FSB_D_L<6> - @lost_lib.LOST	6C4 8D6
FSB_D_L<7>	FSB_D_L<7> - @lost_lib.LOST	6C4 8D6
FSB_D_L<8>	FSB_D_L<8> - @lost_lib.LOST	6C4 8D6
FSB_D_L<9>	FSB_D_L<9> - @lost_lib.LOST	6C4 8D6
FSB_D_L<10>	FSB_D_L<10> - @lost_lib.LOST	6C4 8D6
FSB_D_L<11>	FSB_D_L<11> - @lost_lib.LOST	6C4 8D6
FSB_D_L<12>	FSB_D_L<12> - @lost_lib.LOST	6C4 8D6
FSB_D_L<13>	FSB_D_L<13> - @lost_lib.LOST	6C4 8D6
FSB_D_L<14>	FSB_D_L<14> - @lost_lib.LOST	6C4 8D6

FSB_D_L<15>	FSB_D_L<15> - @lost_lib.LOST	6C4 8C6
FSB_D_L<16>	FSB_D_L<16> - @lost_lib.LOST	6C4 8C6
FSB_D_L<31..16>	FSB_D_L<63..0> - @lost_lib.LOST	5C7
	FSB_D_L<31..16> - @lost_lib.LOST	100C3
FSB_D_L<17>	FSB_D_L<17> - @lost_lib.LOST	6B4 8C6
FSB_D_L<18>	FSB_D_L<18> - @lost_lib.LOST	6B4 8C6
FSB_D_L<19>	FSB_D_L<19> - @lost_lib.LOST	6B4 8C6
FSB_D_L<20>	FSB_D_L<20> - @lost_lib.LOST	6B4 8C6
FSB_D_L<21>	FSB_D_L<21> - @lost_lib.LOST	6B4 8C6
FSB_D_L<22>	FSB_D_L<22> - @lost_lib.LOST	6B4 8C6
FSB_D_L<23>	FSB_D_L<23> - @lost_lib.LOST	6B4 8C6
FSB_D_L<24>	FSB_D_L<24> - @lost_lib.LOST	6B4 8C6
FSB_D_L<25>	FSB_D_L<25> - @lost_lib.LOST	6B4 8C6
FSB_D_L<26>	FSB_D_L<26> - @lost_lib.LOST	6B4 8C6
FSB_D_L<27>	FSB_D_L<27> - @lost_lib.LOST	6B4 8C6
FSB_D_L<28>	FSB_D_L<28> - @lost_lib.LOST	6B4 8C6
FSB_D_L<29>	FSB_D_L<29> - @lost_lib.LOST	6B4 8C6
FSB_D_L<30>	FSB_D_L<30> - @lost_lib.LOST	6B4 8C6
FSB_D_L<31>	FSB_D_L<31> - @lost_lib.LOST	6B4 8C6
FSB_D_L<32>	FSB_D_L<32> - @lost_lib.LOST	6C2 8C6
FSB_D_L<47..32>	FSB_D_L<63..0> - @lost_lib.LOST	5C7
	FSB_D_L<47..32> - @lost_lib.LOST	100C3
FSB_D_L<33>	FSB_D_L<33> - @lost_lib.LOST	6C2 8C6
FSB_D_L<34>	FSB_D_L<34> - @lost_lib.LOST	6C2 8C6
FSB_D_L<35>	FSB_D_L<35> - @lost_lib.LOST	6C2 8C6
FSB_D_L<36>	FSB_D_L<36> - @lost_lib.LOST	6C2 8C6
FSB_D_L<37>	FSB_D_L<37> - @lost_lib.LOST	6C2 8C6
FSB_D_L<38>	FSB_D_L<38> - @lost_lib.LOST	6C2 8C6
FSB_D_L<39>	FSB_D_L<39> - @lost_lib.LOST	6C2 8C6
FSB_D_L<40>	FSB_D_L<40> - @lost_lib.LOST	6C2 8C6
FSB_D_L<41>	FSB_D_L<41> - @lost_lib.LOST	6C2 8C6
FSB_D_L<42>	FSB_D_L<42> - @lost_lib.LOST	6C2 8B6
FSB_D_L<43>	FSB_D_L<43> - @lost_lib.LOST	6C2 8B6
FSB_D_L<44>	FSB_D_L<44> - @lost_lib.LOST	6C2 8B6
FSB_D_L<45>	FSB_D_L<45> - @lost_lib.LOST	6C2 8B6
FSB_D_L<46>	FSB_D_L<46> - @lost_lib.LOST	6C2 8B6
FSB_D_L<47>	FSB_D_L<47> - @lost_lib.LOST	6C2 8B6
FSB_D_L<48>	FSB_D_L<48> - @lost_lib.LOST	6C2 8B6
FSB_D_L<63..48>	FSB_D_L<63..0> - @lost_lib.LOST	5C7
	FSB_D_L<63..48> - @lost_lib.LOST	100C3
FSB_D_L<49>	FSB_D_L<49> - @lost_lib.LOST	6B2 8B6
FSB_D_L<50>	FSB_D_L<50> - @lost_lib.LOST	6B2 8B6
FSB_D_L<51>	FSB_D_L<51> - @lost_lib.LOST	6B2 8B6
FSB_D_L<52>	FSB_D_L<52> - @lost_lib.LOST	6B2 8B6
FSB_D_L<53>	FSB_D_L<53> - @lost_lib.LOST	6B2 8B6
FSB_D_L<54>	FSB_D_L<54> - @lost_lib.LOST	6B2 8B6
FSB_D_L<55>	FSB_D_L<55> - @lost_lib.LOST	6B2 8B6
FSB_D_L<56>	FSB_D_L<56> - @lost_lib.LOST	6B2 8B6
FSB_D_L<57>	FSB_D_L<57> - @lost_lib.LOST	6B2 8B6
FSB_D_L<58>	FSB_D_L<58> - @lost_lib.LOST	6B2 8B6
FSB_D_L<59>	FSB_D_L<59> - @lost_lib.LOST	6B2 8B6
FSB_D_L<60>	FSB_D_L<60> - @lost_lib.LOST	6B2 8B6
FSB_D_L<61>	FSB_D_L<61> - @lost_lib.LOST	6B2 8B6
FSB_D_L<62>	FSB_D_L<62> - @lost_lib.LOST	6B2 8B6
FSB_D_L<63>	FSB_D_L<63> - @lost_lib.LOST	6B2 8B6
FSB_GVREF	FSB_GVREF - @lost_lib.LOST	8C4
FSB_HITM_L	FSB_HITM_L - @lost_lib.LOST	5C7 6C6 8B4 100D3
FSB_HIT_L	FSB_HIT_L - @lost_lib.LOST	5C7 6C6 8B4 100D3
FSB_LOCK_L	FSB_LOCK_L - @lost_lib.LOST	5C7 6C6 8B4 100D3
FSB_REQ_L<0>	FSB_REQ_L<0> - @lost_lib.LOST	6C7 8B4
FSB_REQ_L<4..0>	FSB_REQ_L<4..0> - @lost_lib.LOST	5D7 100C3
FSB_REQ_L<1>	FSB_REQ_L<1> - @lost_lib.LOST	6C7 8B4
FSB_REQ_L<2>	FSB_REQ_L<2> - @lost_lib.LOST	6C7 8B4
FSB_REQ_L<3>	FSB_REQ_L<3> - @lost_lib.LOST	6C7 8B4
FSB_REQ_L<4>	FSB_REQ_L<4> - @lost_lib.LOST	6C7 8B4
FSB_RS_L<0>	FSB_RS_L<0> - @lost_lib.LOST	6C6 8B4
FSB_RS_L<2..0>	FSB_RS_L<2..0> - @lost_lib.LOST	5C7 100D3
FSB_RS_L<1>	FSB_RS_L<1> - @lost_lib.LOST	6C6 8A4
FSB_RS_L<2>	FSB_RS_L<2> - @lost_lib.LOST	6C6 8A4
FSB_SWING	FSB_SWING - @lost_lib.LOST	8A6
FSB_TRDY_L	FSB_TRDY_L - @lost_lib.LOST	5C7 6C6 8A4 100D3
FS_A	FS_A - @lost_lib.LOST	15C1 105C2
FS_B	FS_B - @lost_lib.LOST	15C1
FS_C	FS_C - @lost_lib.LOST	15B1 105C2
FTDI_BT_RX_L	FTDI_BT_RX_L - @lost_lib.LOST	96B6 97C3
FTDI_BT_TX_L	FTDI_BT_TX_L - @lost_lib.LOST	96B6 97C3
FTDI_BT_UART_CTS_L	FTDI_BT_UART_CTS_L - @lost_lib.LOST	96B6 97C3
FTDI_BT_UART_RTS_L	FTDI_BT_UART_RTS_L - @lost_lib.LOST	96B6 97C3
FWA_DET_DIV	FWA_DET_DIV - @lost_lib.LOST	18B2
FWA_GATE	FWA_GATE - @lost_lib.LOST	18B3
FWA_PD_DRAIN	FWA_PD_DRAIN - @lost_lib.LOST	18B2
FWA_PWR_DET_L	FWA_PWR_DET_L - @lost_lib.LOST	18B1 28B8
FWA_PWR_MEAS	FWA_PWR_MEAS - @lost_lib.LOST	18B2 28A8
FWA_PWR_SLCT	FWA_PWR_SLCT - @lost_lib.LOST	18A1 18A6 28C8
FWB_DET_DIV	FWB_DET_DIV - @lost_lib.LOST	18A3
FWB_GATE	FWB_GATE - @lost_lib.LOST	18A4
FWB_PD_DRAIN	FWB_PD_DRAIN - @lost_lib.LOST	18A4
FWB_PWR_DET_L	FWB_PWR_DET_L - @lost_lib.LOST	18B3 28B8
FWB_PWR_MEAS	FWB_PWR_MEAS - @lost_lib.LOST	18B4 28A8
FWB_PWR_SLCT	FWB_PWR_SLCT - @lost_lib.LOST	18A3 18A4 28C8
FW_DIODE_GATE	FW_DIODE_GATE - @lost_lib.LOST	18B6
FW_DIODE_PWR	FW_DIODE_PWR - @lost_lib.LOST	18B5
FW_PWR_A	FW_PWR_A - @lost_lib.LOST	18B1 50D8
FW_PWR_B	FW_PWR_B - @lost_lib.LOST	18B3 51D8
FW_SLCT_L	FW_SLCT_L - @lost_lib.LOST	18A6
G3H_3V42_BOOST	G3H_3V42_BOOST - @lost_lib.LOST	24C5
G3H_3V42_FB	G3H_3V42_FB - @lost_lib.LOST	24C5
G3H_3V42_GND	G3H_3V42_GND - @lost_lib.LOST	24C5
G3H_3V42_SHDN_L	G3H_3V42_SHDN_L - @lost_lib.LOST	24C6
G3H_3V42_SW	G3H_3V42_SW - @lost_lib.LOST	24C5
GND_AUDIO_AMP	GND_AUDIO_AMP - @lost_lib.LOST	37A6
GND_AUDIO_CODEC	GND_AUDIO_CODEC - @lost_lib.LOST	5B6 36A6 36B7 36D2 38B1
		38B3 39A7 40B3 40C8 41B4
		42A4 42A8 42B2 42B5 42C3
		42C7 76B7
GND_AUDIO_DOCKA	GND_AUDIO_DOCKA - @lost_lib.LOST	39B7 50A2
GND_AUDIO_DOCKB	GND_AUDIO_DOCKB - @lost_lib.LOST	39B4 51A2
GND_AUDIO_HP_AMP1	GND_AUDIO_HP_AMP1 - @lost_lib.LOST	36B3 38B5 38C7 41C4
GND_AUDIO_HP_AMP_L	GND_AUDIO_HP_AMP_L - @lost_lib.LOST	36B3 36D2 36D7
GND_SMC_AVSS	GND_SMC_AVSS - @lost_lib.LOST	28C2 29A1 29B7 35B1
GRAPE_PWRON_RST_L	GRAPE_PWRON_RST_L - @lost_lib.LOST	31B3
GRAPE_RESET	GRAPE_RESET - @lost_lib.LOST	30D1 31B2
GRAPE_RESET_R	GRAPE_RESET_R - @lost_lib.LOST	5D6 30B1 30D2
GRAPE_Z1_RESET_L	GRAPE_Z1_RESET_L - @lost_lib.LOST	30D3 31B3 31C1
GRAPE_Z2_RESET_L	GRAPE_Z2_RESET_L - @lost_lib.LOST	30D3 31B1 31B6
GRAPE_Z2_RST_OUT	GRAPE_Z2_RST_OUT - @lost_lib.LOST	30D3 31B2
H2_CS_L	H2_CS_L - @lost_lib.LOST	30D1 31C6 31C6
H2_MISO	H2_MISO - @lost_lib.LOST	30C3 30D1 31C6
H2_MOSI	H2_MOSI - @lost_lib.LOST	30D1 31C6
H2_SCLK	H2_SCLK - @lost_lib.LOST	30D1 31C6
H2_SCLK_R	H2_SCLK_R - @lost_lib.LOST	30D1
HDA_BITCLK	HDA_BITCLK - @lost_lib.LOST	10B2 10B4 103D1
HDA_BITCLK_AUDIO	HDA_BITCLK_AUDIO - @lost_lib.LOST	10B1 36C7 103C1
HDA_RST_L	HDA_RST_L - @lost_lib.LOST	10B2 10B4 103D1

HDA_RST_L_AUDIO	HDA_RST_L_AUDIO - @lost_lib.LOST	10B1 36C7 103C1
HDA_SDI_0	HDA_SDI_0 - @lost_lib.LOST	10B2 10B4 103D1
	HDA_SDI_0_AUDIO - @lost_lib.LOST	10B1 36C7
HDA_SDI_1	HDA_SDI_1 - @lost_lib.LOST	103D1
HDA_SDO	HDA_SDO - @lost_lib.LOST	10A4 10B2 103D1
HDA_SDO_AUDIO	HDA_SDO_AUDIO - @lost_lib.LOST	10B1 36C7 103C1
HDA_SYNC	HDA_SYNC - @lost_lib.LOST	10B2 10B4 103D1
HDA_SYNC_AUDIO	HDA_SYNC_AUDIO - @lost_lib.LOST	10B1 36C7 103C1
HOME_L	HOME_L - @lost_lib.LOST	5A7 28B2 29D8 51C1
	SMC_LID - @lost_lib.LOST	28B3 28B5 29D4
HOST_INT_N	HOST_INT_N - @lost_lib.LOST	30C3 30C4 30D1 31C5
HOST_INT_N_R1	HOST_INT_N_R1 - @lost_lib.LOST	30C3
HOST_MISO	HOST_MISO - @lost_lib.LOST	30C3 30C3 31B6 31D1
HOST_MOSI	HOST_MOSI - @lost_lib.LOST	30C3 31B6 31D1
HOST_REFCLK	HOST_REFCLK - @lost_lib.LOST	31A5 31B6 105B3
HOST_SCLK	HOST_SCLK - @lost_lib.LOST	30D4 31B5 31D3
HOST_SCLK_ROM	HOST_SCLK_ROM - @lost_lib.LOST	31D2
HOST_SCLK_USB_R	HOST_SCLK_USB_R - @lost_lib.LOST	30D3
HOST_SCLK_Z2_R	HOST_SCLK_Z2_R - @lost_lib.LOST	31B6
HP1_BP	HP1_BP - @lost_lib.LOST	42B3
HP1_SWDET	HP1_SWDET - @lost_lib.LOST	42B3
HP2_BP	HP2_BP - @lost_lib.LOST	42B7
HP2_SWDET	HP2_SWDET - @lost_lib.LOST	42B7
IDE_PDIORDY	IDE_PDIORDY - @lost_lib.LOST	10B7 10C7 103D1
IMVP_VR_ON	IMVP_VR_ON - @lost_lib.LOST	20B6 28D8
INT_IRQ14	INT_IRQ14 - @lost_lib.LOST	10B7 10C7 103D1
INT_SERIRQ	INT_SERIRQ - @lost_lib.LOST	9C6 28C8 100D1
LCDVDD_PWREN_L	LCDVDD_PWREN_L - @lost_lib.LOST	32D7
LCDVDD_PWREN_L_R	LCDVDD_PWREN_L_R - @lost_lib.LOST	32D7
LED_BOOST_GND	LED_BOOST_GND - @lost_lib.LOST	26B4
LED_COMP	LED_COMP - @lost_lib.LOST	26C4
LED_EN	LED_EN - @lost_lib.LOST	26B4
LED_IO1_R	LED_IO1_R - @lost_lib.LOST	26C6
LED_IO2_R	LED_IO2_R - @lost_lib.LOST	26C6
LED_IO3_R	LED_IO3_R - @lost_lib.LOST	26C6
LED_IO4_R	LED_IO4_R - @lost_lib.LOST	26C6
LED_IO5_R	LED_IO5_R - @lost_lib.LOST	26C6
LED_IOSET	LED_IOSET - @lost_lib.LOST	26B5
LED_IO_1	LED_IO_1 - @lost_lib.LOST	5C6 26A4 32C2
LED_IO_2	LED_IO_2 - @lost_lib.LOST	5C6 26A4 32C2
LED_IO_3	LED_IO_3 - @lost_lib.LOST	5C6 26A4 32C2
LED_IO_4	LED_IO_4 - @lost_lib.LOST	5C6 26A4 32C2
LED_IO_5	LED_IO_5 - @lost_lib.LOST	5C6 26A4 32C2
LED_OVPIN	LED_OVPIN - @lost_lib.LOST	26B5
LED_OVPRTN	LED_OVPRTN - @lost_lib.LOST	26B5
LED_PWM	LED_PWM - @lost_lib.LOST	26C4
LED_SS	LED_SS - @lost_lib.LOST	26B5
LED_SW	LED_SW - @lost_lib.LOST	26D5
LINE_IN1_L	LINE_IN1_L - @lost_lib.LOST	5B6 39C7 50C1
LINE_IN1_R	LINE_IN1_R - @lost_lib.LOST	5B6 39B7 50C1
LINE_IN2_L	LINE_IN2_L - @lost_lib.LOST	5B7 39C4 51C3
LINE_IN2_R	LINE_IN2_R - @lost_lib.LOST	5B7 39C4 51C3
LINE_OUT1_L	LINE_OUT1_L - @lost_lib.LOST	5B6 39D7 50C1
LINE_OUT1_R	LINE_OUT1_R - @lost_lib.LOST	5B6 39D7 50C1
LINE_OUT2_L	LINE_OUT2_L - @lost_lib.LOST	5B7 39D4 51C3
LINE_OUT2_R	LINE_OUT2_R - @lost_lib.LOST	5B7 39D4 51C3
LPC_AD<0>	LPC_AD<0> - @lost_lib.LOST	9D6 28C8 52C3
LPC_AD<3..0>	LPC_AD<3..0> - @lost_lib.LOST	100D1
LPC_AD<1>	LPC_AD<1> - @lost_lib.LOST	9D6 28C8 52C3
LPC_AD<2>	LPC_AD<2> - @lost_lib.LOST	9D6 28C8 52C3
LPC_AD<3>	LPC_AD<3> - @lost_lib.LOST	9D6 28C8 52C3
LPC_CLK_FWH	LPC_CLK_FWH - @lost_lib.LOST	9D8 52C3 105C2
LPC_CLK_SMC	LPC_CLK_SMC - @lost_lib.LOST	9D7 28C8 105C2
LPC_CLK_STRENGTH	LPC_CLK_STRENGTH - @lost_lib.LOST	9D3 9D4
LPC_FRAME_L	LPC_FRAME_L - @lost_lib.LOST	9C6 28C8 52C3 100D1
LPC_MEZZ_AD<0>	LPC_MEZZ_AD<0> - @lost_lib.LOST	50C3 51C1 52C2
LPC_MEZZ_AD<3..0>	LPC_MEZZ_AD<3..0> - @lost_lib.LOST	5B6 100D1
LPC_MEZZ_AD<1>	LPC_MEZZ_AD<1> - @lost_lib.LOST	50C3 51C1 52C2
LPC_MEZZ_AD<2>	LPC_MEZZ_AD<2> - @lost_lib.LOST	50C3 51C1 52C2
LPC_MEZZ_AD<3>	LPC_MEZZ_AD<3> - @lost_lib.LOST	50C3 51C1 52C2
LPC_MEZZ_CLK_FWH	LPC_MEZZ_CLK_FWH - @lost_lib.LOST	5B6 50B3 51C1 52C2 105C2
LPC_MEZZ_FRAME_L	LPC_MEZZ_FRAME_L - @lost_lib.LOST	5B6 50B3 51C1 52C2 100D1
LVDS_BKLTCTL	LVDS_BKLTCTL - @lost_lib.LOST	9C6 26B8
LVDS_BKLTEN	LVDS_BKLTEN - @lost_lib.LOST	9C6 26B2
LVDS_CLK_N	LVDS_CLK_N - @lost_lib.LOST	5C6 9C6 32C4 101C1
LVDS_CLK_P	LVDS_CLK_P - @lost_lib.LOST	5C6 9C6 32C4 101C1
LVDS_CONN_CLK_N	LVDS_CONN_CLK_N - @lost_lib.LOST	32C2 101C1
LVDS_CONN_CLK_P	LVDS_CONN_CLK_P - @lost_lib.LOST	32C2 101C1
LVDS_DATA_N<0>	LVDS_DATA_N<0> - @lost_lib.LOST	9C6 32C2
LVDS_DATA_N<2..0>	LVDS_DATA_N<2..0> - @lost_lib.LOST	5C6 101C1
LVDS_DATA_N<1>	LVDS_DATA_N<1> - @lost_lib.LOST	9C6 32C2
LVDS_DATA_N<2>	LVDS_DATA_N<2> - @lost_lib.LOST	9C6 32C2
LVDS_DATA_P<0>	LVDS_DATA_P<0> - @lost_lib.LOST	9C6 32C2
LVDS_DATA_P<2..0>	LVDS_DATA_P<2..0> - @lost_lib.LOST	5C6 101C1
LVDS_DATA_P<1>	LVDS_DATA_P<1> - @lost_lib.LOST	9C6 32C2
LVDS_DATA_P<2>	LVDS_DATA_P<2> - @lost_lib.LOST	9C6 32C2
LVDS_DDC_CLK	LVDS_DDC_CLK - @lost_lib.LOST	5D6 9C6 32C5
LVDS_DDC_DATA	LVDS_DDC_DATA - @lost_lib.LOST	5D6 9C6 32C5
LVDS_VDDEN	LVDS_VDDEN - @lost_lib.LOST	9C6 32D8
MAN_RST_C	MAN_RST_C - @lost_lib.LOST	29D7
MAX8510_BP	MAX8510_BP - @lost_lib.LOST	76C6
MAX9705_IN_N	MAX9705_IN_N - @lost_lib.LOST	37B6
MAX9705_IN_P	MAX9705_IN_P - @lost_lib.LOST	37B6
MAX9705_N_IN	MAX9705_N_IN - @lost_lib.LOST	37B5
MAX9705_P_IN	MAX9705_P_IN - @lost_lib.LOST	37B5
MAX9724_C1N	MAX9724_C1N - @lost_lib.LOST	38C6
MAX9724_C1P	MAX9724_C1P - @lost_lib.LOST	38C6
MAX9724_VSS	MAX9724_VSS - @lost_lib.LOST	38C6
MEMV_DDQSET	MEMV_DD

MT_PANEL_IN<11>	MT_PANEL_IN<11> - @lost_lib.LOST	30A6 30A8 31C5
MT_PANEL_IN<12>	MT_PANEL_IN<12> - @lost_lib.LOST	30A6 30A8 31C5
MT_PANEL_IN<13>	MT_PANEL_IN<13> - @lost_lib.LOST	30A6 30A8 31C5
MT_PANEL_IN<14>	MT_PANEL_IN<14> - @lost_lib.LOST	30A6 30A8 31C5
MT_PANEL_IN<15>	MT_PANEL_IN<15> - @lost_lib.LOST	30A6 30A8 31C5
MT_PANEL_IN<16>	MT_PANEL_IN<16> - @lost_lib.LOST	30A5 30A7 31C5
MT_PANEL_IN<17>	MT_PANEL_IN<17> - @lost_lib.LOST	30A5 30A7 31C5
MT_PANEL_IN<18>	MT_PANEL_IN<18> - @lost_lib.LOST	30A5 30A7 31C5
MT_PANEL_IN<19>	MT_PANEL_IN<19> - @lost_lib.LOST	30A5 30A7 31C5
MT_PANEL_IN<20>	MT_PANEL_IN<20> - @lost_lib.LOST	30A5 30A7 31C5
MT_PANEL_IN<21>	MT_PANEL_IN<21> - @lost_lib.LOST	30A7 30B5 31C5
MT_PANEL_IN<22>	MT_PANEL_IN<22> - @lost_lib.LOST	30A7 30B5 31C5
MT_PANEL_IN<23>	MT_PANEL_IN<23> - @lost_lib.LOST	30A7 30B5 31C5
MT_PANEL_IN<24>	MT_PANEL_IN<24> - @lost_lib.LOST	30A7 30B5 31C5
MT_PANEL_IN<25>	MT_PANEL_IN<25> - @lost_lib.LOST	30A7 30B5 31C5
MT_PANEL_IN<26>	MT_PANEL_IN<26> - @lost_lib.LOST	30A7 30B5 31C5
MT_PANEL_IN<27>	MT_PANEL_IN<27> - @lost_lib.LOST	30A7 30B5 31C5
MT_PANEL_IN<28>	MT_PANEL_IN<28> - @lost_lib.LOST	30A7 30B5 31B5
MT_PANEL_IN<29>	MT_PANEL_IN<29> - @lost_lib.LOST	30A7 30B5 31B5
MT_PANEL_OUT<0>	MT_PANEL_OUT<0> - @lost_lib.LOST	30A7 30C7
MT_PANEL_OUT<29..0>	MT_PANEL_OUT<29..0> - @lost_lib.LOST	5D6
MT_PANEL_OUT<1>	MT_PANEL_OUT<1> - @lost_lib.LOST	30B8 30C7
MT_PANEL_OUT<2>	MT_PANEL_OUT<2> - @lost_lib.LOST	30B7 30C7
MT_PANEL_OUT<3>	MT_PANEL_OUT<3> - @lost_lib.LOST	30B8 30C7
MT_PANEL_OUT<4>	MT_PANEL_OUT<4> - @lost_lib.LOST	30B7 30C7
MT_PANEL_OUT<5>	MT_PANEL_OUT<5> - @lost_lib.LOST	30B8 30C7
MT_PANEL_OUT<6>	MT_PANEL_OUT<6> - @lost_lib.LOST	30B7 30C7
MT_PANEL_OUT<7>	MT_PANEL_OUT<7> - @lost_lib.LOST	30B8 30C7
MT_PANEL_OUT<8>	MT_PANEL_OUT<8> - @lost_lib.LOST	30B8 30C7
MT_PANEL_OUT<9>	MT_PANEL_OUT<9> - @lost_lib.LOST	30B8 30C7
MT_PANEL_OUT<10>	MT_PANEL_OUT<10> - @lost_lib.LOST	30B8 30C7
MT_PANEL_OUT<11>	MT_PANEL_OUT<11> - @lost_lib.LOST	30B7 30C7
MT_PANEL_OUT<12>	MT_PANEL_OUT<12> - @lost_lib.LOST	30B7 30C7
MT_PANEL_OUT<13>	MT_PANEL_OUT<13> - @lost_lib.LOST	30B7 30C7
MT_PANEL_OUT<14>	MT_PANEL_OUT<14> - @lost_lib.LOST	30B7 30C7
MT_PANEL_OUT<15>	MT_PANEL_OUT<15> - @lost_lib.LOST	30A5 30C5
MT_PANEL_OUT<16>	MT_PANEL_OUT<16> - @lost_lib.LOST	30A5 30D5
MT_PANEL_OUT<17>	MT_PANEL_OUT<17> - @lost_lib.LOST	30A5 30D5
MT_PANEL_OUT<18>	MT_PANEL_OUT<18> - @lost_lib.LOST	30A6 30C5
MT_PANEL_OUT<19>	MT_PANEL_OUT<19> - @lost_lib.LOST	30A6 30C5
MT_PANEL_OUT<20>	MT_PANEL_OUT<20> - @lost_lib.LOST	30A6 30C5
MT_PANEL_OUT<21>	MT_PANEL_OUT<21> - @lost_lib.LOST	30A5 30C5
MT_PANEL_OUT<22>	MT_PANEL_OUT<22> - @lost_lib.LOST	30A5 30C5
MT_PANEL_OUT<23>	MT_PANEL_OUT<23> - @lost_lib.LOST	30A6 30C5
MT_PANEL_OUT<24>	MT_PANEL_OUT<24> - @lost_lib.LOST	30A6 30C5
MT_PANEL_OUT<25>	MT_PANEL_OUT<25> - @lost_lib.LOST	30A5 30C5
MT_PANEL_OUT<26>	MT_PANEL_OUT<26> - @lost_lib.LOST	30A5 30C5
MT_PANEL_OUT<27>	MT_PANEL_OUT<27> - @lost_lib.LOST	30A6 30C5
MT_PANEL_OUT<28>	MT_PANEL_OUT<28> - @lost_lib.LOST	30A5 30C5
MT_PANEL_OUT<29>	MT_PANEL_OUT<29> - @lost_lib.LOST	30A5 30C5
MT_PANEL_OUT<30>	MT_PANEL_OUT<30> - @lost_lib.LOST	30A5 30C5
MT_PANEL_OUT<31>	MT_PANEL_OUT<31> - @lost_lib.LOST	30A6 30C5
MT_PANEL_OUT<32>	MT_PANEL_OUT<32> - @lost_lib.LOST	30A6 30D4
MT_PANEL_OUT<33>	MT_PANEL_OUT<33> - @lost_lib.LOST	30A5 30D4
MT_PANEL_OUT<34>	MT_PANEL_OUT<34> - @lost_lib.LOST	30A5 30D4
MT_PANEL_OUT<35>	MT_PANEL_OUT<35> - @lost_lib.LOST	30A6 30D4
MT_PANEL_OUT<36>	MT_PANEL_OUT<36> - @lost_lib.LOST	30A6 30D4
MT_PANEL_OUT<37>	MT_PANEL_OUT<37> - @lost_lib.LOST	30A5 30D4
MT_PANEL_OUT<38>	MT_PANEL_OUT<38> - @lost_lib.LOST	30A5 30C4
MT_PANEL_OUT<39>	MT_PANEL_OUT<39> - @lost_lib.LOST	30A6 30C4
NC_ALS_GAIN	NC_ALS_GAIN - @lost_lib.LOST	28A5
NC_CK505_PCI3	NC_CK505_PCI3 - @lost_lib.LOST	16A5
	CK505_PCI3 - @lost_lib.LOST	15B6 16A3
NC_ISENSE_CAL_EN	NC_ISENSE_CAL_EN - @lost_lib.LOST	28B7
NC_PM_BATLOW_L	NC_PM_BATLOW_L - @lost_lib.LOST	28B7
NC_PM_LAN_ENABLE	NC_PM_LAN_ENABLE - @lost_lib.LOST	28D7
NC_PM_S4_STATE_L	NC_PM_S4_STATE_L - @lost_lib.LOST	28C5
NC_PM_SLP_S5_L	NC_PM_SLP_S5_L - @lost_lib.LOST	28C5
NC_SMB_A_S3_CLK	NC_SMB_A_S3_CLK - @lost_lib.LOST	28A5
NC_SMB_A_S3_DATA	NC_SMB_A_S3_DATA - @lost_lib.LOST	28A5
NC_SMB_B_S3_CLK	NC_SMB_B_S3_CLK - @lost_lib.LOST	28A5
NC_SMB_B_S3_DATA	NC_SMB_B_S3_DATA - @lost_lib.LOST	28A5
NC_SMB_MGMT_CLK	NC_SMB_MGMT_CLK - @lost_lib.LOST	28C5
NC_SMB_MGMT_DATA	NC_SMB_MGMT_DATA - @lost_lib.LOST	28C7
NC_SMC_3_TACH	NC_SMC_3_TACH - @lost_lib.LOST	28A7
NC_SMC_ADAPTER_EN	NC_SMC_ADAPTER_EN - @lost_lib.LOST	28D5
NC_SMC_ANALOG_ID	NC_SMC_ANALOG_ID - @lost_lib.LOST	28A7
NC_SMC_BATT_VSET	NC_SMC_BATT_VSET - @lost_lib.LOST	28B5
NC_SMC_CASE_OPEN	NC_SMC_CASE_OPEN - @lost_lib.LOST	28B5
NC_SMC_ODD_DETECT	NC_SMC_ODD_DETECT - @lost_lib.LOST	28B7
NC_SMC_RSTGATE_L	NC_SMC_RSTGATE_L - @lost_lib.LOST	28D7
NC_SMC_SER_BT_EN	NC_SMC_SER_BT_EN - @lost_lib.LOST	28A5
NC_SMC_SMS_INT	NC_SMC_SMS_INT - @lost_lib.LOST	28A5
NC_SMC_SYS_KBDLED	NC_SMC_SYS_KBDLED - @lost_lib.LOST	28C7
NC_SMC_SYS_LED	NC_SMC_SYS_LED - @lost_lib.LOST	28B5
NC_SMC_SYS_VSET	NC_SMC_SYS_VSET - @lost_lib.LOST	28B5
NC_SMS_X	NC_SMS_X - @lost_lib.LOST	28A7
NC_SMS_Y	NC_SMS_Y - @lost_lib.LOST	28A7
NC_SMS_Z	NC_SMS_Z - @lost_lib.LOST	28A7
NC_SYS_ONEWIRE	NC_SYS_ONEWIRE - @lost_lib.LOST	28B7
NC_USB_DEBUGPRT_EN_L	NC_USB_DEBUGPRT_EN_L - @lost_lib.LOST	28B7
P1V5S0_EN	P1V5S0_EN - @lost_lib.LOST	27B5
P3V3S0_EN	P3V3S0_EN - @lost_lib.LOST	27B5
P5VS0_EN	P5VS0_EN - @lost_lib.LOST	27C5
PBUS_AGND	PBUS_AGND - @lost_lib.LOST	19A4 19B4 19B7 19B8 19B8 19C6 19C8 19D6
PBUS_VSENSE_DRAIN	PBUS_VSENSE_DRAIN - @lost_lib.LOST	35C2
PBUS_VSENSE_GATE	PBUS_VSENSE_GATE - @lost_lib.LOST	35C3
PCIE_COMP_R	PCIE_COMP_R - @lost_lib.LOST	9B4
PCIE_PET1_N	PCIE_PET1_N - @lost_lib.LOST	101D1
PCIE_PET1_P	PCIE_PET1_P - @lost_lib.LOST	101D1
PCIE_WAKE_L	PCIE_WAKE_L - @lost_lib.LOST	10B5 100C1
PCIE_WL_D2R_N	PCIE_WL_D2R_N - @lost_lib.LOST	101D1
PCIE_WL_D2R_P	PCIE_WL_D2R_P - @lost_lib.LOST	101D1
PCIE_WL_R2D_N	PCIE_WL_R2D_N - @lost_lib.LOST	101D1
PCIE_WL_R2D_P	PCIE_WL_R2D_P - @lost_lib.LOST	101D1
PGD_SEQUENCER	PGD_SEQUENCER - @lost_lib.LOST	27A6
PM_CLKRUN_L	PM_CLKRUN_L - @lost_lib.LOST	9D6 28C5 100D1
PM_DPRSLPVR	PM_DPRSLPVR - @lost_lib.LOST	9C4 20C4
PM_EXTTS	PM_EXTTS - @lost_lib.LOST	9C3 100D1
PM_PWRBTN_L	PM_PWRBTN_L - @lost_lib.LOST	10B5 28D8
PM_PWROK	PM_PWROK - @lost_lib.LOST	9C3 28D8 100C1
PM_RSMRST_L	PM_RSMRST_L - @lost_lib.LOST	9C3 28D8 100C1
PM_RSTRDY_L	PM_RSTRDY_L - @lost_lib.LOST	10C5 28D5
PM_RSTWARN	PM_RSTWARN - @lost_lib.LOST	10C5 28D8
PM_SLPMODE	PM_SLPMODE - @lost_lib.LOST	9C4 28D5 100C1
PM_SLPRDY_L	PM_SLPRDY_L - @lost_lib.LOST	9C4 28A8 100D1
PM_SLP_S3_L	PM_SLP_S3_L - @lost_lib.LOST	23C8 27A8 28C5 29B4 35B3
PM_STPCPU_L	PM_STPCPU_L - @lost_lib.LOST	10C5 15B4
PM_SUS_STAT_L	PM_SUS_STAT_L - @lost_lib.LOST	28C5 29D4
PM_SYSRST_L	PM_SYSRST_L - @lost_lib.LOST	10C5 28B3 28B8 29C3 94B7
	SMC_LRESET_L - @lost_lib.LOST	28B2 28C8

PM_THRMB_L	PM_THRMB_L - @lost_lib.LOST	10B5
PM_THRMTRIP_L	PM_THRMTRIP_L - @lost_lib.LOST	5C7 6B6 8A6 29B3 100B3
PP1V2_A1010_CODEC	PP1V2_A1010_CODEC - @lost_lib.LOST	76C3
PP1V2_A1010_DCORE	PP1V2_A1010_DCORE - @lost_lib.LOST	76D4
PP1V2_A1010_PLL	PP1V2_A1010_PLL - @lost_lib.LOST	76D4
PP1V2_A1010_PMU	PP1V2_A1010_PMU - @lost_lib.LOST	76D4
PP1V05_S0_CK505_F	PP1V05_S0_CK505_F - @lost_lib.LOST	15D6
PP1V8_A1010	PP1V8_A1010 - @lost_lib.LOST	76A5 76D1
PP2V5_DAC_AVDD	PP2V5_DAC_AVDD - @lost_lib.LOST	94C6
PP2V5_DAC_AVDD_TVPLL	PP2V5_DAC_AVDD_TVPLL1 - @lost_lib.LOST	94D6
PP2V5_DAC_AVDD_TVPLL	PP2V5_DAC_AVDD_TVPLL2 - @lost_lib.LOST	94D6
PP2V5_DAC_DVDD	PP2V5_DAC_DVDD - @lost_lib.LOST	94D6
PP2V5_S0_REF_FB	PP2V5_S0_REF_FB - @lost_lib.LOST	22C5
PP2V7_AUDIO	PP2V7_AUDIO - @lost_lib.LOST	5C6
PP3V1_AUD_ANALOG	PP3V1_AUD_ANALOG - @lost_lib.LOST	36A3 36D2 36D7 40C3
PP3V3_DAC_VDAC	PP3V3_DAC_VDAC - @lost_lib.LOST	94D5
PP3V3_DOCKA_ACC	PP3V3_DOCKA_ACC - @lost_lib.LOST	50C5 52C5
PP3V3_DOCKB_ACC	PP3V3_DOCKB_ACC - @lost_lib.LOST	51D5 52B5
PP3V3_LCDVDD_SW_F	PP3V3_LCDVDD_SW_F - @lost_lib.LOST	5D6 32C2
PP3V3_S0_CK505_F	PP3V3_S0_CK505_F - @lost_lib.LOST	15D6
PP3V3_S0_CPUTHMSNS_R	PP3V3_S0_CPUTHMSNS_R - @lost_lib.LOST	43D5
PP3V3_S0_OUT	PP3V3_S0_OUT - @lost_lib.LOST	5D6 17C8 27B8 27C4
	=PP3V3_S0_AUD_DIG - @lost_lib.LOST	17B6 36D2 37B7 38D7 76D8
	=PP3V3_S0_GRAPE - @lost_lib.LOST	17B6 30A2
	=PP3V3_S0_VIDEO - @lost_lib.LOST	17B6 75C8
	=PP3V3_S0_ROM - @lost_lib.LOST	17B6 33C5
	=PP3V3_S0_THRM_SNR - @lost_lib.LOST	17B6 35D4
	=PP3V3_S0_SCH_PCIEBG - @lost_lib.LOST	12C1 17B6
	=PP3V3_S0_SCH_VCC33 - @lost_lib.LOST	12A6 17B6
	=PP3V3_S0_LCD - @lost_lib.LOST	17B6 32D5 32D8
	=PP3V3_S0_TVOUT - @lost_lib.LOST	17B6 94D3
	=PP3V3_S0_VCORE - @lost_lib.LOST	17B6 20D4
	=PP3V3_S0_PDCISENSE - @lost_lib.LOST	17B6 19D2
	=PP3V3_S0 - @lost_lib.LOST	9B8 9C8 9D3 9D4 9D6 10A3 10C1 10C3 10C8 10D1 17B6 20B8 21A7 27C3 43C5 90C3
	=PP3V3_S0_SMS - @lost_lib.LOST	17B6 34B2
	=PP3V3_S0_SMC_LS - @lost_lib.LOST	17B6 29C3 29D2 29D2
	=PP3V3_S0_CK505 - @lost_lib.LOST	15A8 15A8 15D7 17B6
	=PP3V3_S0_2V5_IN - @lost_lib.LOST	17B6 22D7
	=PP3V3_S0_AUD_DIG - @lost_lib.LOST	17B6 36D2 37B7 38D7 76D8
	=PP3V3_S0_2V5_IN - @lost_lib.LOST	17B6 22D7
	=PP3V3_S0 - @lost_lib.LOST	9B8 9C8 9D3 9D4 9D6 10A3 10C1 10C3 10C8 10D1 17B6 20B8 21A7 27C3 43C5 90C3
PP3V3_S0_U7501	PP3V3_S0_U7501 - @lost_lib.LOST	75C7
PP3V3_S3_OUT	PP3V3_S3_OUT - @lost_lib.LOST	5B6 17C5 21C2
	=PP3V3_S3_FLASH - @lost_lib.LOST	17C4 67C1 67C4
	=PP3V3_S3_ACC - @lost_lib.LOST	17C4 52C3 52C6 52D6
	=PP3V3_S3_GRAPE - @lost_lib.LOST	17C4 30A2 30D1
	=PP3V3_S3_FCTL - @lost_lib.LOST	17C4 65C5 66B1 66B6 66C1 66C6 66D7
	=PP3V3_S3_WL - @lost_lib.LOST	17C4 96C2
	=PP3V3_S3_SCH_USB_PS - @lost_lib.LOST	12B6 17C4
	=PP3V3_S3_SCH - @lost_lib.LOST	12B3 17C4
	=PP3V3_S3_USB_MUX - @lost_lib.LOST	17C4 35B4
	=PP3V3_S3 - @lost_lib.LOST	10C3 10C7 17C4 21B6 23C4 23C7 35B6 35C6 35D6 35D6
	=PP3V3_S3_FET - @lost_lib.LOST	17C4 27C6
	=PP3V3_S3_BT - @lost_lib.LOST	17C4 97C6
	=PP3V3_S3_CAMERA - @lost_lib.LOST	17C4 46C6
	=PP3V3_S3_WL - @lost_lib.LOST	17C4 96C2
	=PP3V3_S3_USB_MUX - @lost_lib.LOST	17C4 35B4
	=PP3V3_S3_SCH_USB_PS - @lost_lib.LOST	12B6 17C4
	=PP3V3_S3_SCH - @lost_lib.LOST	12B3 17C4
	=PP3V3_S3_GRAPE - @lost_lib.LOST	17C4 30A2 30D1
	=PP3V3_S3_FLASH - @lost_lib.LOST	17C4 67C1 67C4
	=PP3V3_S3_FET - @lost_lib.LOST	17C4 27C6
	=PP3V3_S3_FCTL - @lost_lib.LOST	17C4 65C5 66B1 66B6 66C1 66C6 66D7
	=PP3V3_S3_CAMERA - @lost_lib.LOST	17C4 46C6
	=PP3V3_S3_BT - @lost_lib.LOST	17C4 97C6
	=PP3V3_S3_ACC - @lost_lib.LOST	17C4 52C3 52C6 52D6
	=PP3V3_S3 - @lost_lib.LOST	10C3 10C7 17C4 21B6 23C4 23C7 35B6 35C6 35D6 35D6
PP3V3_S5_SMC_AVCC	PP3V3_S5_SMC_AVCC - @lost_lib.LOST	28D3
PP3V3_SMS_VDD	PP3V3_SMS_VDD - @lost_lib.LOST	34B4
PP3V3_U3001_VDD	PP3V3_U3001_VDD - @lost_lib.LOST	30C3 30D2
PP5V_DAC_V5V	PP5V_DAC_V5V - @lost_lib.LOST	94C5
PP18V_S3_S0_GRAPE	PP18V_S3_S0_GRAPE - @lost_lib.LOST	30B2 30D6 30D7 30D8
PP18V_S3_S0_R_GRAPE	PP18V_S3_S0_R_GRAPE - @lost_lib.LOST	30B3
PPBUS_G3H	PPBUS_G3H - @lost_lib.LOST	19C3
PPDCIN_G3H	PPDCIN_G3H - @lost_lib.LOST	18D8 19D8
PPDCIN_G3H_FET	PPDCIN_G3H_FET - @lost_lib.LOST	18D6
PPDCIN_G3H_N_SENSE	PPDCIN_G3H_N_SENSE - @lost_lib.LOST	19D8
PPDCIN_G3H_P_SENSE	PPDCIN_G3H_P_SENSE - @lost_lib.LOST	19D8
PPLED_OUT	PPLED_OUT - @lost_lib.LOST	5C6 17B8 26D3
	=LED_VOUT - @lost_lib.LOST	26C5
	=PPLED_REG - @lost_lib.LOST	17B6 32B2
PPMEM_S0_VDDQSNS	PPMEM_S0_VDDQSNS - @lost_lib.LOST	23C5
PPMEM_S0_VTTSNS	PPMEM_S0_VTTSNS - @lost_lib.LOST	23C5
PPVIN_S0_P2V5S0_SVIN	PPVIN_S0_P2V5S0_SVIN - @lost_lib.LOST	22D6
PP_3V42_G3H_SWITCHER	PP_3V42_G3H_SWITCHER - @lost_lib.LOST	18A7 24D7 50D8 51C8
RSMRST_PWRGD	RSMRST_PWRGD - @lost_lib.LOST	23B4 27B7 28D8
RTC_RST_L	RTC_RST_L - @lost_lib.LOST	9C4 100D1

RTC_X1	RTC_X1 - @lost_lib.LOST	9C4
RTC_X2	RTC_X2 - @lost_lib.LOST	9C4
S0PWRGD_1V5_DIV	S0PWRGD_1V5_DIV - @lost_lib.LOST	27B7
S0PWRGD_3V3_DIV	S0PWRGD_3V3_DIV - @lost_lib.LOST	27B7
S0PWRGD_5V_DIV	S0PWRGD_5V_DIV - @lost_lib.LOST	27B7
S0SEQ_BEGIN	S0SEQ_BEGIN - @lost_lib.LOST	27B7
S0_1V05_EN	S0_1V05_EN - @lost_lib.LOST	21A5
S0_1V05_EN_L	S0_1V05_EN_L - @lost_lib.LOST	21A6
S0_1V05_FB	S0_1V05_FB - @lost_lib.LOST	21A4
S0_1V05_GND	S0_1V05_GND - @lost_lib.LOST	21A4
S0_1V05_PGD	S0_1V05_PGD - @lost_lib.LOST	21A5
S0_1V05_SW	S0_1V05_SW - @lost_lib.LOST	21A4
S0_1V05_SYNCH	S0_1V05_SYNCH - @lost_lib.LOST	21A5
S0_2V5_PGD	S0_2V5_PGD - @lost_lib.LOST	22C5
S0_2V5_SW	S0_2V5_SW - @lost_lib.LOST	22C5
S0_PGD_1V05_EN	S0_PGD_1V05_EN - @lost_lib.LOST	21A7 27B4
S3_1V5_EN	S3_1V5_EN - @lost_lib.LOST	23B6
S3_3V3_BG1	S3_3V3_BG1 - @lost_lib.LOST	21C5
S3_3V3_BG2	S3_3V3_BG2 - @lost_lib.LOST	21C5
S3_3V3_BOOST1	S3_3V3_BOOST1 - @lost_lib.LOST	21D5
S3_3V3_BOOST2	S3_3V3_BOOST2 - @lost_lib.LOST	21D5
S3_3V3_CCM	S3_3V3_CCM - @lost_lib.LOST	21C6
S3_3V3_COMP	S3_3V3_COMP - @lost_lib.LOST	21C7
S3_3V3_FB	S3_3V3_FB - @lost_lib.LOST	21C6
S3_3V3_GND	S3_3V3_GND - @lost_lib.LOST	21B7
S3_3V3_ILSET	S3_3V3_ILSET - @lost_lib.LOST	21C6
S3_3V3_MODE	S3_3V3_MODE - @lost_lib.LOST	21C6
S3_3V3_PHASE1	S3_3V3_PHASE1 - @lost_lib.LOST	21C5
S3_3V3_PHASE2	S3_3V3_PHASE2 - @lost_lib.LOST	21B5
S3_3V3_RT	S3_3V3_RT - @lost_lib.LOST	21C6
S3_3V3_RUNSS	S3_3V3_RUNSS - @lost_lib.LOST	21C6
S3_3V3_RUNSS_L	S3_3V3_RUNSS_L - @lost_lib.LOST	21C8
S3_3V3_TG1	S3_3V3_TG1 - @lost_lib.LOST	21C5
S3_3V3_TG2	S3_3V3_TG2 - @lost_lib.LOST	21C5
S3_3V3_VC	S3_3V3_VC - @lost_lib.LOST	21C6
S3_3V3_VCC	S3_3V3_VCC - @lost_lib.LOST	21D6
S3_3V3_VSENSE	S3_3V3_VSENSE - @lost_lib.LOST	21C6
S3_5V_GND	S3_5V_GND - @lost_lib.LOST	22A5
S3_5V_SW	S3_5V_SW - @lost_lib.LOST	22B5
SCH_5V_S0_5REF	SCH_5V_S0_5REF - @lost_lib.LOST	12B3
SCH_5V_S3_REFSUS	SCH_5V_S3_REFSUS - @lost_lib.LOST	12B3
SCH_BSEL2	SCH_BSEL2 - @lost_lib.LOST	8A4 15B2 100B3 100C1
SCH_BUS_SWING	SCH_BUS_SWING - @lost_lib.LOST	100C1
SCH_CPGO	SCH_CPGO - @lost_lib.LOST	9A2 9C4 100C1
SCH_CPG1	SCH_CPG1 - @lost_lib.LOST	9A2 9C4 100C1
SCH_CLK14P3M_TIMER	SCH_CLK14P3M_TIMER - @lost_lib.LOST	10A5 15B7 105C2
SCH_CLK48M_USBCTLR	SCH_CLK48M_USBCTLR - @lost_lib.LOST	10A4 105B2
SCH_CLK_OE_L	SCH_CLK_OE_L - @lost_lib.LOST	100C1
SCH_CMOSREF	SCH_CMOSREF - @lost_lib.LOST	100C1
SCH_DDR2_VREF	SCH_DDR2_VREF - @lost_lib.LOST	11B2
SCH_GTLREF	SCH_GTLREF - @lost_lib.LOST	100C1
SCH_INTVRMEN	SCH_INTVRMEN - @lost_lib.LOST	9C4 100D1
SCH_PROCHOT_L	SCH_PROCHOT_L - @lost_lib.LOST	10B4 28D5 29C2
SCH_RCOMPO	SCH_RCOMPO - @lost_lib.LOST	100C1
SCH_RESERVED_9_10	SCH_RESERVED_9_10 - @lost_lib.LOST	12C2
SCH_RESERVED_11_12_1	SCH_RESERVED_11_12_13 - @lost_lib.LOST	12C2
3		
SCH_SD0_CLK	SCH_SD0_CLK - @lost_lib.LOST	9C6 101C1
SCH_SD0_CMD	SCH_SD0_CMD - @lost_lib.LOST	9C6 101C1
SCH_SD0_DATA<0>	SCH_SD0_DATA<0> - @lost_lib.LOST	9B6
SCH_SD0_DATA<7..0>	SCH_SD0_DATA<7..0> - @lost_lib.LOST	101C1
SCH_SD0_DATA<1>	SCH_SD0_DATA<1> - @lost_lib.LOST	9B6
SCH_SD0_DATA<2>	SCH_SD0_DATA<2> - @lost_lib.LOST	9B6
SCH_SD0_DATA<3>	SCH_SD0_DATA<3> - @lost_lib.LOST	9B6
SCH_SD1_CMD	SCH_SD1_CMD - @lost_lib.LOST	101B1
SCH_SD2_CMD	SCH_SD2_CMD - @lost_lib.LOST	101B1
SCH_SD12_CD_CMD	SCH_SD12_CD_CMD - @lost_lib.LOST	9B6
SCH_TESTIN_L	SCH_TESTIN_L - @lost_lib.LOST	10C1
SCH_USB_OC_L	SCH_USB_OC_L - @lost_lib.LOST	10C7
SCH_VCCSUSBYP	SCH_VCCSUSBYP - @lost_lib.LOST	9D4
SCH_VCCSUSUSBBYP	SCH_VCCSUSUSBBYP - @lost_lib.LOST	9D4
SD0_CLK	SD0_CLK - @lost_lib.LOST	9C8 96C3 101C1 103B1
SD0_CMD	SD0_CMD - @lost_lib.LOST	9C8 96C3 101B1 103B1
SD0_DATA<0>	SD0_DATA<0> - @lost_lib.LOST	9B7 96C3
SD0_DATA<7..0>	SD0_DATA<7..0> - @lost_lib.LOST	101B1 103B1
SD0_DATA<1>	SD0_DATA<1> - @lost_lib.LOST	9B7 96C3
SD0_DATA<2>	SD0_DATA<2> - @lost_lib.LOST	9B7 96C3
SD0_DATA<3>	SD0_DATA<3> - @lost_lib.LOST	9B7 96C3
SDVOB_B_N	SDVOB_B_N - @lost_lib.LOST	9B4 94C8 101C4
SDVOB_B_P	SDVOB_B_P - @lost_lib.LOST	9B4 94C8 101C4
SDVOB_CLK_N	SDVOB_CLK_N - @lost_lib.LOST	9C4 94C8 101C4
SDVOB_CLK_P	SDVOB_CLK_P - @lost_lib.LOST	9C4 94C8 101C4
SDVOB_G_N	SDVOB_G_N - @lost_lib.LOST	9B4 94B8 101C4
SDVOB_G_P	SDVOB_G_P - @lost_lib.LOST	9B4 94C8 101C4
SDVOB_INT_N	SDVOB_INT_N - @lost_lib.LOST	9C4 94A6
	TP_SDVOB_INT_N - @lost_lib.LOST	94A5 101B4
SDVOB_INT_P	SDVOB_INT_P - @lost_lib.LOST	9C4 94A6
	TP_SDVOB_INT_P - @lost_lib.LOST	94A5 101B4
SDVOB_R_N	SDVOB_R_N - @lost_lib.LOST	9B4 94B8 101C4
SDVOB_R_P	SDVOB_R_P - @lost_lib.LOST	9B4 94B8 101C4
SDVOB_STALL_N	SDVOB_STALL_N - @lost_lib.LOST	9C4 94A6
	TP_SDVOB_STALL_N - @lost_lib.LOST	94A5 101B4
SDVOB_STALL_P	SDVOB_STALL_P - @lost_lib.LOST	9C4 94A6
	TP_SDVOB_STALL_P - @lost_lib.LOST	94A5 101B4
SDVO_CTRLCLK	SDVO_CTRLCLK - @lost_lib.LOST	9A8 9C4
	SDVO_TVDAC_CTRLCLK - @lost_lib.LOST	9A6 94B7 101A4
SDVO_CTRLDATA	SDVO_CTRLDATA - @lost_lib.LOST	9A8 9C4
	SDVO_TVDAC_CTRLDATA - @lost_lib.LOST	9A6 94B7 101A4
SDVO_DAC_BLUE_N	SDVO_DAC_BLUE_N - @lost_lib.LOST	94C7 101B4
SDVO_DAC_BLUE_P	SDVO_DAC_BLUE_P - @lost_lib.LOST	94C7 101B4
SDVO_DAC_CLK_N	SDVO_DAC_CLK_N - @lost_lib.LOST	94C7 101C4
SDVO_DAC_CLK_P	SDVO_DAC_CLK_P - @lost_lib.LOST	94C7 101C4
SDVO_DAC_GREEN_N	SDVO_DAC_GREEN_N - @lost_lib.LOST	94B7 101B4
SDVO_DAC_GREEN_P	SDVO_DAC_GREEN_P - @lost_lib.LOST	94C7 101B4
SDVO_DAC_RED_N	SDVO_DAC_RED_N - @lost_lib.LOST	94B7 101B4
SDVO_DAC_RED_P	SDVO_DAC_RED_P - @lost_lib.LOST	94B7 101C4
SENSE_N	SENSE_N - @lost_lib.LOST	19C6
SENSE_P	SENSE_P - @lost_lib.LOST	19C6
SENSE_P_R	SENSE_P_R - @lost_lib.LOST	19B4
SIL_HDASDO_SPDIF	SIL_HDASDO_SPDIF - @lost_lib.LOST	103C1
SLPIOVR_L	SLPIOVR_L - @lost_lib.LOST	10B4 27C3 90B7
SLPIOVR_R_L	SLPIOVR_R_L - @lost_lib.LOST	90B6
SLPIO_G - @lost_lib.LOST	SLPIO_G - @lost_lib.LOST	27C3
SMB_ALERT_L	SMB_ALERT_L - @lost_lib.LOST	10A5 100C1
SMB_BSA_CLK	SMB_BSA_CLK - @lost_lib.LOST	28A5 29C6
SMB_BSA_DATA	SMB_BSA_DATA - @lost_lib.LOST	28A5 29C6
SMB_B_S3_CLK	SMB_B_S3_CLK - @lost_lib.LOST	103B1
SMB_B_S3_DATA	SMB_B_S3_DATA - @lost_lib.LOST	103B1
SMB_CLK	SMB_CLK - @lost_lib.LOST	10A3 15B6 42A2 42A5 90B6
	AUD_I2C_CLK_HS2 - @lost_lib.LOST	42B5
	AUD_I2C_CLK_HS1 - @lost_lib.LOST	42B2
SMB_DATA	SMB_DATA - @lost_lib.LOST	10A3 15B6 42A2 42A5 90B6
	AUD_I2C_DATA_HS2 - @lost_lib.LOST	42B5

	AUD_I2C_DATA_HS1 - @lost_lib.LOST	42B2
SMC_ACCA_DET_L	SMC_ACCA_DET_L - @lost_l

TP_LVDS_DATAP3	TP_LVDS_DATAP3 - @lost_lib.LOST	9C6
TP_LVDS_VSYNC_OUT	TP_LVDS_VSYNC_OUT - @lost_lib.LOST	5D6 32C2
TP_PCIE_PER1_N	TP_PCIE_PER1_N - @lost_lib.LOST	9B4
TP_PCIE_PER1_P	TP_PCIE_PER1_P - @lost_lib.LOST	9B4
TP_PCIE_PER2_N	TP_PCIE_PER2_N - @lost_lib.LOST	9B4
TP_PCIE_PER2_P	TP_PCIE_PER2_P - @lost_lib.LOST	9B4
TP_PCIE_PET1_N	TP_PCIE_PET1_N - @lost_lib.LOST	9B4
TP_PCIE_PET1_P	TP_PCIE_PET1_P - @lost_lib.LOST	9B4
TP_PCIE_PET2_N	TP_PCIE_PET2_N - @lost_lib.LOST	9B4
TP_PCIE_PET2_P	TP_PCIE_PET2_P - @lost_lib.LOST	9B4
TP_SCART_CVBS	TP_SCART_CVBS - @lost_lib.LOST	94C5
TP_SCART_VGA_B	TP_SCART_VGA_B - @lost_lib.LOST	94C5
TP_SCART_VGA_G	TP_SCART_VGA_G - @lost_lib.LOST	94C5
TP_SCART_VGA_R	TP_SCART_VGA_R - @lost_lib.LOST	94C5
TP_SCH_CLK_LPC_1	TP_SCH_CLK_LPC_1 - @lost_lib.LOST	9D6
TP_SCH_CLK_LPC_2	TP_SCH_CLK_LPC_2 - @lost_lib.LOST	9D6
TP_SCH_GPIOSUS0	TP_SCH_GPIOSUS0 - @lost_lib.LOST	10C5
TP_SCH_GPIO_9	TP_SCH_GPIO_9 - @lost_lib.LOST	10B5
TP_SCH_PLLMON1	TP_SCH_PLLMON1 - @lost_lib.LOST	8A6
TP_SCH_PLLMON1_L	TP_SCH_PLLMON1_L - @lost_lib.LOST	8A6
TP_SCH_RESVRD0	TP_SCH_RESVRD0 - @lost_lib.LOST	9D4
TP_SCH_RESVRD8	TP_SCH_RESVRD8 - @lost_lib.LOST	9D4
TP_SCH_SD0_DATA6	TP_SCH_SD0_DATA6 - @lost_lib.LOST	9B6
TP_SCH_SD1_CLK	TP_SCH_SD1_CLK - @lost_lib.LOST	9B6
TP_SCH_SD2_CLK	TP_SCH_SD2_CLK - @lost_lib.LOST	9B6
TP_U0600_G28	TP_U0600_G28 - @lost_lib.LOST	6B5
TP_U0600_K27	TP_U0600_K27 - @lost_lib.LOST	6B7
TP_U0600_U30	TP_U0600_U30 - @lost_lib.LOST	6B5
TP_U0600_V27	TP_U0600_V27 - @lost_lib.LOST	6B5
TP_U3101_TCK	TP_U3101_TCK - @lost_lib.LOST	31C6
TP_U3101_TDI	TP_U3101_TDI - @lost_lib.LOST	31C6
TP_U3101_TDO	TP_U3101_TDO - @lost_lib.LOST	31C6
TP_U3101_TMS	TP_U3101_TMS - @lost_lib.LOST	31C6
TP_USB_D_N	TP_USB_D_N - @lost_lib.LOST	10D7 103B4
TP_USB_D_P	TP_USB_D_P - @lost_lib.LOST	10D7 103B4
TP_USB_G_N	TP_USB_G_N - @lost_lib.LOST	10D7 103B4
TP_USB_G_P	TP_USB_G_P - @lost_lib.LOST	10D7 103B4
TP_USB_H_N	TP_USB_H_N - @lost_lib.LOST	10D7 103B4
TP_USB_H_P	TP_USB_H_P - @lost_lib.LOST	10C7 103B4
TP_WL_TCK	TP_WL_TCK - @lost_lib.LOST	96B3
TP_WL_TDI	TP_WL_TDI - @lost_lib.LOST	96B3
TP_WL_TDO	TP_WL_TDO - @lost_lib.LOST	96B3
TP_WL_TMS	TP_WL_TMS - @lost_lib.LOST	96B3
TP_WL_TRST_L	TP_WL_TRST_L - @lost_lib.LOST	96B3
TVCLK_N	TVCLK_N - @lost_lib.LOST	94B7 101B4
TVCLK_P	TVCLK_P - @lost_lib.LOST	94B7 101B4
TVOUT_DOCKS_EN	TVOUT_DOCKS_EN - @lost_lib.LOST	10B4 10C2 75B8
U6700_R1	U6700_R1 - @lost_lib.LOST	67B6
U6700_R2	U6700_R2 - @lost_lib.LOST	67B6
U6700_R3	U6700_R3 - @lost_lib.LOST	67B6
U6700_R4	U6700_R4 - @lost_lib.LOST	67B6
U6710_R1	U6710_R1 - @lost_lib.LOST	67B3
U6710_R2	U6710_R2 - @lost_lib.LOST	67B3
U6710_R3	U6710_R3 - @lost_lib.LOST	67B3
U6710_R4	U6710_R4 - @lost_lib.LOST	67B3
USBA_EXT_NR	USBA_EXT_NR - @lost_lib.LOST	35D6
USBA_EXT_PR	USBA_EXT_PR - @lost_lib.LOST	35D6
USBA_GATE	USBA_GATE - @lost_lib.LOST	18D3
USBA_GATE_D	USBA_GATE_D - @lost_lib.LOST	18C3
USBA_PWR_DETECT_L	USBA_PWR_DETECT_L - @lost_lib.LOST	18D2 28B8
USBA_PWR_SLCT	USBA_PWR_SLCT - @lost_lib.LOST	18C2 28C8
USBB_EXT_NR	USBB_EXT_NR - @lost_lib.LOST	35B6
USBB_EXT_PR	USBB_EXT_PR - @lost_lib.LOST	35C6
USBB_GATE	USBB_GATE - @lost_lib.LOST	18C5
USBB_GATE_D	USBB_GATE_D - @lost_lib.LOST	18C4
USBB_PWR_DETECT_L	USBB_PWR_DETECT_L - @lost_lib.LOST	18C3 28B8
USBB_PWR_SLCT	USBB_PWR_SLCT - @lost_lib.LOST	18C4 28C8
USBCC	USBCC - @lost_lib.LOST	10B5 28B5
USB_BT_N	USB_BT_N - @lost_lib.LOST	10D7 97C5 103C4
USB_BT_P	USB_BT_P - @lost_lib.LOST	10D7 97C5 103C4
USB_CAMERA_CONN_N	USB_CAMERA_CONN_N - @lost_lib.LOST	5B6 46C6 103D4
USB_CAMERA_CONN_P	USB_CAMERA_CONN_P - @lost_lib.LOST	5B6 46C6 103D4
USB_CAMERA_N	USB_CAMERA_N - @lost_lib.LOST	10D7 46C6 103D4
USB_CAMERA_P	USB_CAMERA_P - @lost_lib.LOST	10D7 46C6 103D4
USB_C_N	USB_C_N - @lost_lib.LOST	10D7 35A4 103D4
	USB_DOCKS_MUX_N - @lost_lib.LOST	10D7
USB_C_P	USB_C_P - @lost_lib.LOST	10D7 35A4 103D4
	USB_DOCKS_MUX_P - @lost_lib.LOST	10D7
USB_FLASH_CON_N	USB_FLASH_CON_N - @lost_lib.LOST	65B5 103D4
USB_FLASH_CON_P	USB_FLASH_CON_P - @lost_lib.LOST	65C5 103D4
USB_FLASH_N	USB_FLASH_N - @lost_lib.LOST	10D7 65B6 103D4
USB_FLASH_P	USB_FLASH_P - @lost_lib.LOST	10D7 65C6 103D4
USB_GRAPE_N	USB_GRAPE_N - @lost_lib.LOST	10D7 30D4 103C4
USB_GRAPE_P	USB_GRAPE_P - @lost_lib.LOST	10D7 30D4 103C4
USB_LAND_DOCK_N	USB_LAND_DOCK_N - @lost_lib.LOST	35A3 35D5 50D3 103D4
USB_LAND_DOCK_P	USB_LAND_DOCK_P - @lost_lib.LOST	35A3 35D5 50D3 103D4
USB_PORT_DOCK_N	USB_PORT_DOCK_N - @lost_lib.LOST	35A3 35C5 51D3 103D4
USB_PORT_DOCK_P	USB_PORT_DOCK_P - @lost_lib.LOST	35A3 35C5 51D3 103D4
USB_PSOC_N	USB_PSOC_N - @lost_lib.LOST	30D3
USB_PSOC_P	USB_PSOC_P - @lost_lib.LOST	30D3
USB_PWR_A	USB_PWR_A - @lost_lib.LOST	18D2 50D7
USB_PWR_B	USB_PWR_B - @lost_lib.LOST	18C3 51D7
USB_RBIAS_PN	USB_RBIAS_PN - @lost_lib.LOST	10C7
VCORE_BG	VCORE_BG - @lost_lib.LOST	20C5
VCORE_BOOST	VCORE_BOOST - @lost_lib.LOST	20C5
VCORE_BOOST_RCD	VCORE_BOOST_RCD - @lost_lib.LOST	20D4
VCORE_CLSET	VCORE_CLSET - @lost_lib.LOST	20C6
VCORE_CS	VCORE_CS - @lost_lib.LOST	20B2
VCORE_CSN	VCORE_CSN - @lost_lib.LOST	20C6
VCORE_CSP	VCORE_CSP - @lost_lib.LOST	20C6
VCORE_CSP_R	VCORE_CSP_R - @lost_lib.LOST	20B3
VCORE_DAC	VCORE_DAC - @lost_lib.LOST	20C6
VCORE_DRN	VCORE_DRN - @lost_lib.LOST	20C5
VCORE_ERROUT	VCORE_ERROUT - @lost_lib.LOST	20C5
VCORE_FBN	VCORE_FBN - @lost_lib.LOST	20C6
VCORE_FBP	VCORE_FBP - @lost_lib.LOST	20C6
VCORE_GND	VCORE_GND - @lost_lib.LOST	20A4 20B6 20C8
VCORE_HYS	VCORE_HYS - @lost_lib.LOST	20C6
VCORE_RAMP	VCORE_RAMP - @lost_lib.LOST	20B5
VCORE_SS	VCORE_SS - @lost_lib.LOST	20C6
VCORE_TG	VCORE_TG - @lost_lib.LOST	20C5
VCORE_TTRIP	VCORE_TTRIP - @lost_lib.LOST	20C6
VCORE_VCCA	VCORE_VCCA - @lost_lib.LOST	20D6
VCORE_VREF	VCORE_VREF - @lost_lib.LOST	20C4 20C8
VR_PWRGD_CLKEN_L	VR_PWRGD_CLKEN_L - @lost_lib.LOST	20A7 20C4
VSSAPCIEBG	VSSAPCIEBG - @lost_lib.LOST	12B2
WL_HOST_WAKE	WL_HOST_WAKE - @lost_lib.LOST	28A8 96B3
WL_RESET_L	WL_RESET_L - @lost_lib.LOST	28D5 96B3
WL_WAKE_L	WL_WAKE_L - @lost_lib.LOST	29B4
XDP_BPM_L<0>	XDP_BPM_L<0> - @lost_lib.LOST	6C5 90C6
XDP_BPM_L<4..0>	XDP_BPM_L<4..0> - @lost_lib.LOST	100A3
XDP_BPM_L<1>	XDP_BPM_L<1> - @lost_lib.LOST	6C5 90C6
XDP_BPM_L<2>	XDP_BPM_L<2> - @lost_lib.LOST	6C5 90C6
XDP_BPM_L<3>	XDP_BPM_L<3> - @lost_lib.LOST	6C5 90C6

XDP_BPM_L<4>	XDP_BPM_L<4> - @lost_lib.LOST	6C5 90C6
XDP_BPM_L<5>	XDP_BPM_L<5> - @lost_lib.LOST	6C5 6C5 90C6 100A3
XDP_CPURST_L	XDP_CPURST_L - @lost_lib.LOST	90B3
XDP_DBRESET_L	XDP_DBRESET_L - @lost_lib.LOST	6C5 28A5 90B3 100A3
XDP_PWRGD	XDP_PWRGD - @lost_lib.LOST	90C6
XDP_SCH_TCK_<1>	XDP_SCH_TCK_<1> - @lost_lib.LOST	10C5 90B6 100C1
XDP_SCH_TDI	XDP_SCH_TDI - @lost_lib.LOST	10C5 90A5 100C1
XDP_SCH_TDO	XDP_SCH_TDO - @lost_lib.LOST	10C5 90A4 90B3 100C1
XDP_SCH_TMS	XDP_SCH_TMS - @lost_lib.LOST	10C5 90A4 100C1
	XDP_TMS - @lost_lib.LOST	6A8 6C5 90A5 90B3 100B3
XDP_SCL	XDP_SCL - @lost_lib.LOST	90B5
XDP_SDA	XDP_SDA - @lost_lib.LOST	90B5
XDP_TCK	XDP_TCK - @lost_lib.LOST	6A8 6C5 90B6 100A3
XDP_TDI	XDP_TDI - @lost_lib.LOST	6A8 6C5 90A4 90B3 100B3
XDP_TDO	XDP_TDO - @lost_lib.LOST	6A8 6C5 90A5 100B3
XDP_TRST_L	XDP_TRST_L - @lost_lib.LOST	6C5 10C5 90B3 100A3
XTAL_FLASH_IN	XTAL_FLASH_IN - @lost_lib.LOST	66C6
XTAL_FLASH_OUT	XTAL_FLASH_OUT - @lost_lib.LOST	66C6
Y9400_2	Y9400_2 - @lost_lib.LOST	94A7
Y_PR	Y_PR - @lost_lib.LOST	75B8 94B3 101B7
Z1_1V8_OUT	Z1_1V8_OUT - @lost_lib.LOST	31D4 31D5
Z1_BON_L<0>	Z1_BON_L<0> - @lost_lib.LOST	30C8 31C3
Z1_BON_L<1>	Z1_BON_L<1> - @lost_lib.LOST	30C8 31C3
Z1_BON_L<2>	Z1_BON_L<2> - @lost_lib.LOST	30C7 31C3
Z1_BON_L<3>	Z1_BON_L<3> - @lost_lib.LOST	30C7 31C3
Z1_BON_L<4>	Z1_BON_L<4> - @lost_lib.LOST	30D6 31C3
Z1_BON_L<5>	Z1_BON_L<5> - @lost_lib.LOST	30D6 31C3
Z1_B_ADR<0>	Z1_B_ADR<0> - @lost_lib.LOST	30C8 30D6 30D7 31C3
Z1_B_ADR<1>	Z1_B_ADR<1> - @lost_lib.LOST	30C8 30D6 30D7 31C3
Z1_B_ADR<2>	Z1_B_ADR<2> - @lost_lib.LOST	30C8 30D6 30D7 31C3
Z1_CS_L	Z1_CS_L - @lost_lib.LOST	31C6 31D3
Z1_DONE	Z1_DONE - @lost_lib.LOST	31C3 31C6
Z1_GO	Z1_GO - @lost_lib.LOST	31C3 31C6
Z1_MISO	Z1_MISO - @lost_lib.LOST	31B6 31C3
Z1_MOSI	Z1_MOSI - @lost_lib.LOST	31B6 31C3
Z1_PCLK	Z1_PCLK - @lost_lib.LOST	31C3 31C6
Z1_SCLK	Z1_SCLK - @lost_lib.LOST	31C6 31D3
Z1_STMIN	Z1_STMIN - @lost_lib.LOST	31C3
Z2_3V3_1V8_IN	Z2_3V3_1V8_IN - @lost_lib.LOST	31D6
Z2_VDDANA	Z2_VDDANA - @lost_lib.LOST	31D8
Z2_VDDCORE	Z2_VDDCORE - @lost_lib.LOST	31A6 31D8

Title: Cref Part Report
Design: lost
Date: Feb 19 11:01:06 2008

C0500	CAP_1210	lost[5D1]
C0501	CAP_1210	lost[5D1]
C0502	CAP_1210	lost[5D1]
C0503	CAP_1210	lost[5D1]
C0504	CAP_1210	lost[5D1]
C0505	CAP_1210	lost[5D1]
C0506	CAP_1210	lost[5C1]
C0507	CAP_1210	lost[5C1]
C0508	CAP_1210	lost[5C1]
C0509	CAP_1210	lost[5C1]
C0600	CAP_201	lost[6B6]
C0601	CAP_201	lost[6B4]
C0700	CAP_402	lost[7D4]
C0701	CAP_402	lost[7D3]
C0702	CAP_201	lost[7B3]
C0703	CAP_402	lost[7D3]
C0704	CAP_402	lost[7D3]
C0705	CAP_402	lost[7D4]
C0706	CAP_402	lost[7D3]
C0708	CAP_201	lost[7C6]
C0709	CAP_201	lost[7C6]
C0710	CAP_402	lost[7C6]
C0711	CAP_402	lost[7D1]
C0712	CAP_402	lost[7D2]
C0713	CAP_402	lost[7D2]
C0714	CAP_402	lost[7D2]
C0715	CAP_402	lost[7D2]
C0716	CAP_402	lost[7D3]
C0717	CAP_201	lost[7D6]
C0718	CAP_201	lost[7D5]
C0719	CAP_402	lost[7C6]
C0750	CAP_402	lost[7D3]
C0751	CAP_402	lost[7D2]
C0752	CAP_402	lost[7D2]
C0753	CAP_402	lost[7D2]
C0754	CAP_402	lost[7D2]
C0800	CAP_201	lost[8B7]
C0801	CAP_201	lost[8B2]
C0802	CAP_201	lost[8C3]
C0900	CAP_201	lost[9D2]
C0901	CAP_402	lost[9C2]
C0902	CAP_201	lost[9C2]
C0905	CAP_402	lost[9C2]
C1000	CAP_402	lost[10D4]
C1001	CAP_402	lost[10D5]
C1002	CAP_402	lost[10D5]
C1003	CAP_402	lost[10D4]
C1050	CAP_402	lost[10D4]
C1100	CAP_201	lost[11B2]
C1200	CAP_402	lost[12A5]
C1201	CAP_402	lost[12A6]
C1202	CAP_402	lost[12A6]
C1203	CAP_402	lost[12B7]
C1204	CAP_402	lost[12B7]
C1205	CAP_402	lost[12B7]
C1206	CAP_402-LF	lost[12D2]
C1207	CAP_201	lost[12D3]
C1208	CAP_201	lost[12D3]
C1209	CAP_201	lost[12D2]
C1210	CAP_201	lost[12B2]
C1211	CAP_201	lost[12A3]
C1212	CAP_201	lost[12A3]
C1213	CAP_201	lost[12A3]
C1215	CAP_201	lost[12B5]
C1216	CAP_201	lost[12B5]
C1217	CAP_201	lost[12B1]
C1219	CAP_402	lost[12C8]
C1221	CAP_402	lost[12C8]
C1222	CAP_201	lost[12A2]
C1223	CAP_402	lost[12D8]
C1224	CAP_402	lost[12B7]
C1225	CAP_402-LF	lost[12D2]
C1226	CAP_402	lost[12D2]
C1227	CAP_402	lost[12D1]
C1230	CAP_402	lost[12A4]
C1250	CAP_201	lost[12A3]
C1251	CAP_201	lost[12A2]
C1260	CAP_402	lost[12B6]
C1261	CAP_402	lost[12D1]
C1400	CAP_201	lost[14A4]
C1402	CAP_201	lost[14D6]
C1403	CAP_201	lost[14D4]
C1404	CAP_201	lost[14D3]
C1405	CAP_201	lost[14D3]
C1406	CAP_201	lost[14D4]
C1407	CAP_201	lost[14D8]
C1408	CAP_201	lost[14D8]
C1409	CAP_201	lost[14D8]
C1410	CAP_201	lost[14D8]
C1411	CAP_201	lost[14B8]
C1412	CAP_201	lost[14B8]
C1413	CAP_201	lost[14B8]
C1414	CAP_201	lost[14B8]
C1415	CAP_201	lost[14B4]
C1416	CAP_201	lost[14B4]
C1417	CAP_201	lost[14B4]
C1418	CAP_201	lost[14B4]
C1419	CAP_402-LF	lost[14D8]
C1420	CAP_402-LF	lost[14D3]
C1421	CAP_402-LF	lost[14B8]
C1422	CAP_402-LF	lost[14B4]
C1423	CAP_201	lost[14D1]
C1424	CAP_201	lost[14B6]
C1425	CAP_201	lost[14B2]
C1500	CAP_201	lost[15D5]
C1501	CAP_201	lost[15D5]
C1502	CAP_201	lost[15D6]
C1503	CAP_201	lost[15D6]
C1504	CAP_201	lost[15D6]
C1505	CAP_201	lost[15D6]
C1506	CAP_201	lost[15D6]
C1507	CAP_201	lost[15D6]
C1508	CAP_201	lost[15D6]
C1509	CAP_201	lost[15D6]
C1510	CAP_603	lost[15D7]
C1511	CAP_603	lost[15D7]
C1512	CAP_201	lost[15C6]
C1513	CAP_201	lost[15C6]
C1514	CAP_201	lost[15D5]
C1800	CAP_0805	lost[18C7]
C1801	CAP_402	lost[18B5]
C1802	CAP_402	lost[18C5]
C1803	CAP_402	lost[18D4]
C1910	CAP_805	lost[19D7]
C1929	CAP_0805	lost[19D8]
C1930	CAP_0805	lost[19D8]
C1931	CAP_201	lost[19B7]
C1932	CAP_201	lost[19B8]
C1933	CAP_201	lost[19B8]
C1934	CAP_402	lost[19D5]
C1935	CAP_0805	lost[19D4]
C1936	CAP_805	lost[19D5]
C1937	CAP_P_SM	lost[19C3]
C1938	CAP_201	lost[19C2]
C1941	CAP_0805	lost[19D6]
C1942	CAP_201	lost[19C6]
C1943	CAP_402	lost[19C7]
C1944	CAP_201	lost[19C7]
C1945	CAP_201	lost[19C6]
C1946	CAP_201	lost[19B3]
C1947	CAP_201	lost[19A4]
C1948	CAP_201	lost[19B4]
C1949	CAP_603	lost[19C2]
C1950	CAP_201	lost[19B2]
C1951	CAP_201	lost[19C6]
C1952	CAP_201	lost[19C3]
C1953	CAP_201	lost[19D2]
C1954	CAP_201	lost[19C6]
C1955	CAP_201	lost[19C3]
C1956	CAP_201	lost[19B2]
C1957	CAP_201	lost[19A3]
C1958	CAP_402	lost[19D4]
C1971	CAP_201	lost[19C2]
C1990	CAP_201	lost[19A6]
C1991	CAP_201	lost[19A6]
C1992	CAP_201	lost[19A6]
C1993	CAP_201	lost[19A5]
C1994	CAP_201	lost[19C2]
C2000	CAP_805	lost[20C3]
C2001	CAP_402	lost[20D6]
C2002	CAP_402	lost[20D6]
C2003	CAP_402	lost[20C2]
C2004	CAP_805	lost[20C3]
C2005	CAP_402	lost[20C4]
C2006	CAP_201	lost[20C2]
C2007	CAP_201	lost[20B3]
C2008	CAP_201	lost[20B2]
C2009	CAP_P_SM	lost[20B2]
C2010	CAP_201	lost[20B1]
C2011	CAP_201	lost[20C7]
C2012	CAP_201	lost[20C7]
C2013	CAP_201	lost[20C7]
C2014	CAP_201	lost[20B4]
C2015	CAP_201	lost[20A4]
C2016	CAP_201	lost[20B5]
C2017	CAP_201	lost[20B5]
C2018	CAP_201	lost[20C4]
C2019	CAP_201	lost[20C4]
C2020	CAP_201	lost[20B7]
C2021	CAP_201	lost[20B8]
C2022	CAP_201	lost[20B7]
C2023	CAP_201	lost[20C6]
C2024	CAP_201	lost[20C2]
C2100	CAP_P_SM	lost[21C3]
C2101	CAP_201	lost[21D3]
C2102	CAP_201	lost[21C7]
C2103	CAP_402	lost[21D5]
C2104	CAP_603	lost[21D3]
C2105	CAP_402	lost[21D5]
C2107	CAP_402	lost[21B6]
C2108	CAP_603	lost[21B7]
C2111	CAP_201	lost[21A2]
C2112	CAP_P_B2-SM	lost[21A3]
C2113	CAP_402	lost[21D7]
C2114	CAP_402	lost[21C3]
C2115	CAP_201	lost[21A3]
C2116	CAP_201	lost[21B4]
C2117	CAP_201	lost[21C3]
C2118	CAP_201	lost[21B3]
C2120	CAP_201	lost[21C6]
C2121	CAP_201	lost[21C7]
C2122	CAP_201	lost[21D4]
C2123	CAP_201	lost[21C2]
C2205	CAP_603	lost[22A5]
C2209	CAP_603	lost[22A6]
C2250	CAP_603	lost[22D7]
C2251	CAP_201	lost[22C6]
C2252	CAP_201	lost[22C4]
C2253	CAP_603	lost[22C3]
C2300	CAP_201	lost[23C7]
C2301	CAP_201	lost[23B6]
C2320	CAP_603	lost[23C4]
C2321	CAP_402	lost[23C6]
C2322	CAP_402	lost[23B7]
C2323	CAP_603	lost[23C5]
C2324	CAP_603	lost[23C5]
C2325	CAP_603	lost[23D6]
C2326	CAP_402	lost[23C4]
C2327	CAP_P_SM	lost[23B3]
C2328	CAP_402	lost[23B3]
C2329	CAP_P_SM	lost[23B2]
C2330	CAP_603	lost[23B2]
C2331	CAP_201	lost[23B2]
C2332	CAP_201	lost[23B2]
C2400	CAP_603	lost[24C3]
C2401	CAP_402	lost[24C4]
C2404	CAP_0805	lost[24D6]
C2405	CAP_201	lost[24C4]
C2411	CAP_201	lost[24C6]
C2450	CAP_402	lost[24B7]
C2451	CAP_201	lost[24B6]
C2452	CAP_603	lost[24B3]
C2456	CAP_201	lost[24A2]
C2600	CAP_201	lost[26C3]
C2601	CAP_402	lost[26C6]
C2602	CAP_402	lost[26C6]
C2603	CAP_201	lost[26B5]
C2604	CAP_1210	lost[26C4]
C2605	CAP_201	lost[26C4]
C2700	CAP_402	lost[27C5]
C2701	CAP_402	lost[27B5]
C2702	CAP_402	lost[27B5]
C2703	CAP_402	lost[27C6]
C2704	CAP_402	lost[27B6]
C2705	CAP_402	lost[27B6]
C2706	CAP_402	lost[27C2]
C2707	CAP_201	lost[27B5]
C2750	CAP_402	lost[27B7]
C2757	CAP_201	lost[27A6]
C2758	CAP_201	lost[27A6]
C2759	CAP_201	lost[27A5]
C2760	CAP_201	lost[27A5]
C2803	CAP_201	lost[28D3]
C2804	CAP_201	lost[28D3]
C2805	CAP_201	lost[28D3]
C2806	CAP_201	lost[28D3]
C2807	CAP_805	lost[28D4]
C2808	CAP_402	lost[28D2]
C2900	CAP_201	lost[29B1]
C2901	CAP_201	lost[29C6]
C2902	CAP_201	lost[29C6]
C2903	CAP_201	lost[29D7]
C2906	CAP_201	lost[29C7]
C2907	CAP_603	lost[29B7]
C2908	CAP_402	lost[29B8]
C2909	CAP_402	lost[29D7]
C2910	CAP_201	lost[29D8]
C3000	CAP_603	lost[30A3]
C3001	CAP_603	lost[30A5]
C3002	CAP_402	lost[30D1]
C3003	CAP_201	lost[30D2]
C3004	CAP_201	lost[30D6]
C3005	CAP_603	lost[30D6]
C3006	CAP_201	lost[30D7]
C3007	CAP_603	lost[30D8]
C3008	CAP_0201	lost[30A3]
C3009	CAP_402	lost[30A4]
C3052	CAP_201	lost[30D5]
C3053	CAP_603	lost[30D5]
C3100	CAP_201	lost[31D2]
C3101	CAP_402	lost[31D3]
C3102	CAP_201	lost[31D4]
C3103	CAP_201	lost[31D4]
C3104	CAP_402	lost[31D4]
C3105	CAP_201	lost[31D6]
C3106	CAP_201	lost[31D6]
C3107	CAP_201	lost[31D6]
C3108	CAP_201	lost[31D6]
C3109	CAP_201	lost[31D7]
C3110	CAP_201	lost[31D7]
C3111	CAP_603	lost[31D7]
C3112	CAP_402	lost[31D7]
C3150	CAP_201	lost[31B2]
C3200	CAP_201	lost[32B3]
C3202	CAP_603	lost[32D5]
C3203	CAP_201	lost[32D6]
C3204	CAP_201	lost[32D6]
C3206	CAP_201	lost[32D3]
C3303	CAP_201	lost[33C4]
C3400	CAP_402-LF	lost[34B4]
C3401	CAP_201	lost[34B4]
C3500	CAP_201	lost[35D3]
C3502	CAP_402	lost[35B1]
C3503	CAP_201	lost[35D8]
C3504	CAP_201	lost[35B8]
C3505	CAP_201	lost[35D6]
C3506	CAP_201	lost[35C6]
C3507	CAP_201	lost[35B4]
C3600	CAP_P_0603-SM	lost[36A5]
C3601	CAP_201	lost[36A5]
C3602	CAP_201	lost[36A3]
C3603	CAP_201	lost[36A5]
C3604	CAP_201	lost[36A4]
C3610	CAP_402	lost[36D6]
C3611	CAP_201	lost[36D6]
C3612	CAP_201	lost[36D6]
C3613	CAP_P_603-SM	lost[36D5]
C3614	CAP_201	lost[36D4]
C3615	CAP_P_2012-LLP	lost[36D4]
C3616	CAP_201	lost[36D3]
C3617	CAP_201	lost[36D3]
C3618	CAP_603	lost[36D3]
C3619	CAP_402-1	lost[36D6]
C3620	CAP_402-1	lost[36D6]
C3621	CAP_402-LF	lost[36C6]
C3622	CAP_402-LF	lost[36C6]
C3623	CAP_P_2012-LLP	lost[36B4]
C3624	CAP_P_402	lost[36B4]
C3701	CAP_P_2012-LLP	lost[37B4]
C3702	CAP_201	lost[37B5]
C3703	CAP_201	lost[37B5]
C3705	CAP_402	lost[37B5]
C3800	CAP_402	lost[38D7]
C3801	CAP_201	lost[38D7]
C3802	CAP_402	lost[38C5]
C3803	CAP_402	lost[38C6]
C3810	CAP_P_402	lost[38B7]
C3811	CAP_201	lost[38B6]
C3812	CAP_P_402	lost[38B7]
C3820	CAP_P_402	lost[38A7]
C3821	CAP_201	lost[38A6]
C3822	CAP_P_402	lost[38B7]
C3840	CAP_P_402	lost[38B3]
C3841	CAP_201	lost[38B3]
C3843	CAP_201	lost[38B2]
C3844	CAP_201	lost[38B2]
C3950	CAP_201	lost[39A7]
C3951	CAP_201	lost[39A6]
C4010	CAP_P_402	lost[40C6]
C4011	CAP_P_402	lost[40C6]
C4012	CAP_P_402	lost[40C5]
C4020	CAP_P_402	lost[40B6]
C4021	CAP_P_402	lost[40B6]
C4022	CAP_P_402	lost[40C5]
C4050	CAP_201	lost[40C3]
C4200	CAP_201	lost[42C3]
C4201	CAP_201	lost[42C6]
C4210	CAP_P_402	lost[42A3]
C4211	CAP_201	lost[42B3]
C4212	CAP_201	lost[42B3]
C4213	CAP_201	lost[42B2]
C4214	CAP_201	lost[42A3]
C4215	CAP_201	lost[42B2]
C4220	CAP_P_402	lost[42A7]
C4221	CAP_201	lost[42B6]
C4222	CAP_201	lost[42B7]
C4223	CAP_201	lost[42B6]
C4224	CAP_201	lost[42A7]
C4225	CAP_201	lost[42B6]
C4300	CAP_402	lost[43C5]
C4301	CAP_402	lost[43D4]
C5000	CAP_201	lost[50C7]
C5084	CAP_402	lost[50D7]
C5086	CAP_402	lost[50D8]
C5090	CAP_201	lost[50D6]
C5100	CAP_201	lost[51C7]
C5184	CAP_402	lost[51D7]
C5186	CAP_402	lost[51D7]
C5190	CAP_201	lost[51D6]
C5200	CAP_201	lost[52C6]
C5201	CAP_201	lost[52C6]
C5202	CAP_201	lost[52C6]
C5203	CAP_201	lost[52B6]
C5208	CAP_201	lost[52C3]
C6600	CAP_201	lost[66A7]
C6601	CAP_201	lost[66A6]
C6602	CAP_201	lost[66A6]
C6603	CAP_402	lost[66A6]
C6604	CAP_201	lost[66D7]
C6605	CAP_201	lost[66D7]
C6606	CAP_201	lost[66D6]
C6607	CAP_201	lost[66D6]
C6608	CAP_402	lost[66D6]
C6610	CAP_201	lost[66C2]
C6620	CAP_201	lost[66C7]
C6621	CAP_201	lost[66C6]
C6700	CAP_201	lost[67C5]
C6701	CAP_201	lost[67C5]
C6702	CAP_402	lost[67C5]
C6710	CAP_201	lost[67C2]
C6711	CAP_201	lost[67C2]
C6712	CAP_402	lost[67C2]
C7502	CAP_201	lost[75C7]
C7510	CAP_201	lost[75D5]
C7511	CAP_201	lost[75C5]
C7512	CAP_201	lost[75C5]
C7513	CAP_201	lost[75C5]
C7514	CAP_201	lost[75B5]
C7515	CAP_201	lost[75B5]
C7516	CAP_201	lost[75B5]
C7517	CAP_201	lost[75B5]
C7518	CAP_201	lost[75B5]
C7600	CAP_402-LF	lost[76C7]
C7601	CAP_201	lost[76C6]
C7602	CAP_P_402	lost[76C5]
C7603	CAP_201	lost[76C5]
C7604	CAP_201	lost[76C7]
C7610	CAP_201	lost[76D4]
C7611	CAP_402	lost[76D4]
C7612	CAP_201	lost[76D3]
C7613	CAP_402	lost[76D3]
C7614	CAP_201	lost[76D2]
C7615	CAP_402	lost[76D2]
C7616	CAP_201	lost[76C3]
C7617	CAP_201	lost[76C3]
C7618	CAP_402	lost[76C3]
C7620	CAP_201	lost[76B7]
C7621	CAP_201	lost[76B7]
C7622	CAP_201	lost[76B6]
C7623	CAP_201	lost[76B6]
C7630	CAP_201	lost[76C6]
C7631	CAP_201	lost[76B5]
C7650	CAP_201	lost[76A5]
C9000	CAP_201	lost[90B5]
C9001	CAP_201	lost[90B4]
C9401	CAP_603	lost[94D7]
C9402	CAP_201	lost[94D7]
C9403	CAP_201	lost[94D6]
C9404	CAP_201	lost[94D6]
C9405	CAP_603	lost[94D7]
C9406	CAP_201	lost[94D7]
C9407	CAP_603	lost[94C7]
C9408	CAP_201	lost[94C7]
C9409	CAP_603	lost[94C7]
C9410	CAP_201	lost[94C7]
C9411	CAP_201	lost[94C6]
C9412	CAP_201	lost[94C6]
C9413	CAP_201	lost[94D5]
C9414	CAP_201	lost[94D5]
C9415	CAP_201	lost[94D5]
C9416	CAP_603	lost[94D4]
C9417	CAP_201	lost[94C5]
C9418	CAP_603	lost[94C4]
C9419	CAP_201	lost[94B7]
C9420	CAP_201	lost[94B7]
C9421	CAP_201	lost[94A7]
C9422	CAP_201	lost[94A7]
C9450	CAP_201	lost[94C7]
C9451	CAP_201	lost[94C7]
C9452	CAP_201	lost[94C7]
C9453	CAP_201	lost[94C7]
C9454	CAP_201	lost[94C7]
C9455	CAP_201	lost[94B7]
C9456	CAP_201	lost[94B7]
C9457	CAP_201	lost[94B7]
C9600	CAP_402	lost[96C5]
C9601	CAP_201	lost[96C5]
C9602	CAP_603	lost[96C4]
C9603	CAP_201	lost[96C3]
C9700	CAP_201	lost[97B5]
C9701	CAP_201	lost[97C5]
C9702	CAP_201	lost[97C5]
C9703	CAP_603	lost[97C5]
D1200	DIODE_SCHOT_SOT23	lost[12B3]
D1801	DIODE_SCHOT_SOD882	lost[18A7]
D1900	DIODE_SCHOT_SOD-323	lost[19D5]
D1910	DIODE_SCHOT_2P_SOD-723	lost[19B7]
D1912	DIODE_SCHOT_SOD-323	lost[19D5]
D1913	DIODE_SCHOT_SOD-323	lost[19D6]
D1915	DIODE_ZENER_SOT523	lost[19C7]
D1916	DIODE_SCHOT_2P_SOD-723	lost[19B6]
D2000	DIODE_SCHOT_2P_SOD-723	lost[20D5]
D2100	DIODE_SCHOT_SOD-323-HF	lost[21D5]
D2101	DIODE_SCHOT_SOD-323-HF	lost[21D5]
D2400	DIODE_SCHOT_2P_SOD-923	lost[24B2]

D2600	DIODE_SCHOT_SOD-323	lost[26D4]
D3000	DIODE_SCHOT_SOD-323	lost[30B3]
D5000	RCLAMP0502N_SLP1210N_6	lost[50D2]
D5023	DIODE_SCHOT_6P_4C_2A_SOT666-6	lost[50D7]
D5100	RCLAMP0502N_SLP1210N_6	lost[51D2]
D5120	DIODE_SCHOT_6P_4C_2A_SOT666-6	lost[51D7]
DZ3900	SUPPR_TRANSIENT1_402	lost[39C6]
DZ3901	SUPPR_TRANSIENT1_402	lost[39C6]
DZ3902	SUPPR_TRANSIENT1_402	lost[39C7]
DZ3903	SUPPR_TRANSIENT1_402	lost[39B7]
DZ3904	SUPPR_TRANSIENT1_402	lost[39B6]
DZ3905	SUPPR_TRANSIENT1_402	lost[39B6]
DZ3910	SUPPR_TRANSIENT1_402	lost[39C3]
DZ3911	SUPPR_TRANSIENT1_402	lost[39C3]
DZ3912	SUPPR_TRANSIENT1_402	lost[39C4]
DZ3913	SUPPR_TRANSIENT1_402	lost[39B3]
DZ3914	SUPPR_TRANSIENT1_402	lost[39B3]
DZ3915	SUPPR_TRANSIENT1_402	lost[39B3]
DZ5089	SUPPR_TRANSIENT1_402	lost[50B7]
DZ5090	SUPPR_TRANSIENT1_402	lost[50C4]
DZ5091	SUPPR_TRANSIENT1_402	lost[50C6]
DZ5092	SUPPR_TRANSIENT1_402	lost[50D4]
DZ5093	SUPPR_TRANSIENT1_402	lost[50A7]
DZ5189	SUPPR_TRANSIENT1_402	lost[51B7]
DZ5190	SUPPR_TRANSIENT1_402	lost[51D4]
DZ5191	SUPPR_TRANSIENT1_402	lost[51C6]
DZ5192	SUPPR_TRANSIENT1_402	lost[51C4]
DZ5193	SUPPR_TRANSIENT1_402	lost[51A7]
F1800	FUSE_603-HF	lost[18D7]
F1900	FUSE_1206	lost[19C2]
FL5007	FILTER_2P_0201	lost[50B5]
FL5008	FILTER_2P_0201	lost[50A5]
FL5011	FILTER_2P_0201	lost[50B5]
FL5020	FILTER_2P_0201	lost[50B3]
FL5107	FILTER_2P_0201	lost[51B5]
FL5108	FILTER_2P_0201	lost[51A5]
FL5111	FILTER_2P_0201	lost[51B5]
FL5120	FILTER_2P_0201	lost[51B3]
FL7500	FILTER_2P_0201	lost[75C7]
J1900	CON_M6RT_S2MT_SM1_M-RT-SM	lost[19A5]
J3010	CON_F50ST_D4MT_SM_F-ST-SM	lost[30B7]
J3011	CON_F60ST_D4MT_SM_F-ST-SM	lost[30B6]
J3020	CON_F4RT_S2MT_SMA_F-RT-SM1	lost[30B1]
J3201	CON_F30ST_S5MT_SM_F-ST-SM	lost[32D1]
J3700	CON_M4RT_S2MT_SM_M-R T-SM	lost[37B2]
J3800	CON_M4RT_S2MT_SM_M-R T-SM	lost[38C2]
J4111	CON_M10RT_S2MT_SM1_M-RT-SM	lost[41D5]
J4161	CON_M10RT_S2MT_SM1_M-RT-SM	lost[41B5]
J4600	CON_F6RT_S2MT_SM_F-R T-SM	lost[46C5]
J5001	CON_F36ST_D4MT_SM_F-ST-SM	lost[50C2]
J5105	CON_F36ST_D4MT_SM_F-ST-SM	lost[51C2]
J5400	CON_M4RT_S2MT_SM_M-R T-SM	lost[54C2]
J6500	CON_F6RT_S2MT_SM_F-R T-SM	lost[65B4]
J9000	CON_F60ST_D_SM1_F-ST-SM	lost[90C4]
L1500	IND_0402-LF	lost[15D7]
L1501	IND_0402-LF	lost[15D7]
L1900	IND_IHLP2525BD-SM	lost[19C4]
L1901	IND_SM-LF	lost[19A6]
L2000	IND_PCMC042T-SM	lost[20C2]
L2102	IND_PCMC042T-SM	lost[21C4]
L2103	IND_PCMC042T-SM	lost[21A3]
L2200	IND_MDT2520CN-SM	lost[22B5]
L2250	IND_SM	lost[22C4]
L2320	IND_MMD05CZ-SM	lost[23B3]
L2401	IND_S1024AS-SM	lost[24C4]
L2450	IND_S1024AS-SM	lost[24B4]
L2600	IND_IHLP2020BZ11-SM	lost[26D5]
L3000	IND_VLF	lost[30B4]
L3201	IND_0402	lost[32D5]
L3202	FILTER_4P_TCM1005	lost[32C3]
L3400	FILTER_2P_0201	lost[34B4]
L3601	FILTER_2P_0201	lost[36A5]
L3602	FILTER_2P_0201	lost[36A5]
L3900	FILTER_2P_0201	lost[39D6]
L3901	FILTER_2P_0201	lost[39D6]
L3902	FILTER_2P_0201	lost[39C6]
L3903	FILTER_2P_0201	lost[39C6]
L3904	FILTER_2P_0201	lost[39B6]
L3905	FILTER_2P_0201	lost[39B6]
L3910	FILTER_2P_0201	lost[39D2]
L3911	FILTER_2P_0201	lost[39D2]
L3912	FILTER_2P_0201	lost[39C2]
L3913	FILTER_2P_0201	lost[39C2]
L3914	FILTER_2P_0201	lost[39C2]
L3915	FILTER_2P_0201	lost[39B2]
L3916	FILTER_2P_0201	lost[39C2]
L4600	FILTER_4P_TCM1005	lost[46C6]
L5006	IND_0402	lost[50A7]
L5009	IND_0402	lost[50D5]
L5013	IND_0402	lost[50B7]
L5014	IND_0402	lost[50C5]
L5015	IND_0402	lost[50C7]
L5016	FILTER_4P_TCM1005	lost[50D2]
L5017	IND_0603	lost[50D7]
L5039	IND_0603	lost[50C7]
L5106	IND_0402	lost[51A7]
L5109	IND_0402	lost[51C5]
L5113	IND_0402	lost[51B7]
L5114	IND_0402	lost[51D5]
L5115	IND_0402	lost[51C7]
L5116	FILTER_4P_TCM1005	lost[51D2]
L5117	IND_0603	lost[51D7]
L5139	IND_0603	lost[51C7]
L6500	FILTER_4P_TCM1005	lost[65B5]
L7500	IND_0603	lost[75C5]
L7501	IND_0603	lost[75C5]
L7502	IND_0603	lost[75B5]
L7600	FILTER_2P_0201	lost[76D7]
L9400	IND_0402-LF	lost[94D7]
L9401	IND_0402-LF	lost[94D7]
L9402	IND_0402-LF	lost[94D7]
L9403	IND_0402-LF	lost[94C7]
L9405	IND_0402-LF	lost[94D4]
L9406	IND_0402-LF	lost[94C4]
Q1801	TRA_DUAL_PWRPK_PCHN_6P_PWRPK-1212-8	lost[18B4 18C5]
Q1803	TRA_DUAL_PWRPK_PCHN_6P_PWRPK-1212-8	lost[18B3 18D3]
Q1807	TRA_DUAL_2N7002A_SOT563	lost[18C4 18C4]
Q1808	TRA_DUAL_2N7002A_SOT563	lost[18A3 18A4]
Q1809	TRA_PWPK_PCHN_5P_PWRPK-1212-8	lost[18B6]
Q1810	TRA_DUAL_2N7002A_SOT563	lost[18A5 18A6]
Q1816	TRA_DUAL_2N7002A_SOT563	lost[18C3 18D2]
Q1817	TRA_DUAL_2N7002A_SOT563	lost[18B1 18B2]
Q1910	TRA_SI7904DN_PWRPK-1212-8	lost[19C5]
Q1915	TRA_DUAL_2N7002A_SOT563	lost[19B2 19A2]
Q1916	TRA_DUAL_2N7002A_SOT563	lost[19A3 19A1]
Q1917	TRA_PWPK_PCHN_5P_PWRPK-1212-8	lost[19C2]
Q2000	TRA_FDZ294N_BGA	lost[20C3]
Q2001	TRA_FDZ294N_BGA	lost[20B4]
Q2002	TRA_2N7002T_SOT-523-3	lost[20A7]
Q2100	TRA_SI7904DN_PWRPK-1212-8	lost[21C4]
Q2101	TRA_SI7904DN_PWRPK-1212-8	lost[21C4]
Q2102	TRA_DUAL_SSM6N15FE_SOT563	lost[21C7 21C8]
Q2103	TRA_DUAL_2N7002A_SOT563	lost[21A7 21A6]
Q2320	TRA_SI7904DN_PWRPK-1212-8	lost[23B3]
Q2400	TRA_SSM3K15FV_SOD-VESM-HF	lost[24B3]
Q2401	TRA_PCH_CEDM8001_SOT883L	lost[24B3]
Q2701	TRA_FDZ294N_BGA	lost[27C5]
Q2702	TRA_FDZ294N_BGA	lost[27C5]
Q2703	TRA_FDZ294N_BGA	lost[27B5]
Q2709	TRA_SI5486DU_POWERPAK	lost[27C2]
Q2900	TRA_DUAL_SSM6N15FE_SOT563	lost[29A4 29A4]
Q2902	TRA_DUAL_BC847BV_SOT563-HF	lost[29D2 29D1]
Q3100	TRA_DUAL_2N7002A_SOT563	lost[31B1 31B1]
Q3101	TRA_2N7002T_SOT-523-3	lost[31A6]
Q3102	TRA_2N7002T_SOT-523-3	lost[31B1]
Q3200	TRA_FDZ293P_BGA	lost[32D6]
Q3201	TRA_2N7002T_SOT-523-3	lost[32D7]
Q3500	TRA_NTK3142P_PCHN_3P_SOT723-3-HF	lost[35C2]
Q3501	TRA_2N7002T_SOT-523-3	lost[35B3]
Q4200	TRA_NCH_SSM3K16CT_CST3	lost[42C2]
Q4201	TRA_NCH_SSM3K16CT_CST3	lost[42C6]
R1	THERMISTER_0402	lost[20B2]
R0600	RES_201	lost[6C8]
R0601	RES_201	lost[6C8]
R0602	RES_201	lost[6C8]
R0603	RES_201	lost[6B5]
R0604	RES_201	lost[6B5]
R0605	RES_201	lost[6B5]
R0606	RES_201	lost[6B5]
R0607	RES_201	lost[6D5]
R0608	RES_201	lost[6B1]
R0609	RES_201	lost[6B1]
R0610	RES_201	lost[6B1]
R0611	RES_201	lost[6B1]
R0612	RES_201	lost[6D4]
R0613	RES_201	lost[6C5]
R0614	RES_201	lost[6C5]
R0620	RES_201	lost[6A7]
R0621	RES_201	lost[6A7]
R0622	RES_201	lost[6A7]
R0623	RES_201	lost[6A7]
R0650	RES_201	lost[6B7]
R0690	RES_201	lost[6C5]
R0700	RES_201	lost[7B3]
R0701	RES_201	lost[7B3]
R0702	RES_201	lost[7B3]
R0703	RES_201	lost[7B3]
R0704	RES_201	lost[7B3]
R0705	RES_201	lost[7B3]
R0706	RES_201	lost[7B3]
R0800	RES_201	lost[8B7]
R0801	RES_201	lost[8B7]
R0802	RES_201	lost[8A8]
R0804	RES_201	lost[8C2]
R0805	RES_201	lost[8C2]
R0806	RES_201	lost[8C2]
R0807	RES_201	lost[8B7]
R0808	RES_201	lost[8B2]
R0900	RES_201	lost[9C2]
R0903	RES_201	lost[9D2]
R0904	RES_201	lost[9B1]
R0909	RES_201	lost[9D4]
R0910	RES_201	lost[9D3]
R0911	RES_201	lost[9B3]
R0912	RES_201	lost[9D6]
R0913	RES_201	lost[9D5]
R0920	RES_201	lost[9D6]
R0923	RES_201	lost[9C7]
R0926	RES_201	lost[9B7]
R0934	RES_201	lost[9C3]
R0936	RES_201	lost[9A2]
R0937	RES_201	lost[9D3]
R0938	RES_201	lost[9D3]
R0940	RES_201	lost[9C6]
R0941	RES_201	lost[9C6]
R0942	RES_201	lost[9B6]
R0943	RES_201	lost[9B6]
R0944	RES_201	lost[9B6]
R0945	RES_201	lost[9B6]
R0966	RES_201	lost[9C3]
R0967	RES_201	lost[9A1]
R0970	RES_201	lost[9A7]
R0971	RES_201	lost[9A7]
R0980	RES_201	lost[9D7]
R1001	RES_201	lost[10A5]
R1003	RES_201	lost[10A4]
R1004	RES_201	lost[10C4]
R1005	RES_201	lost[10C3]
R1006	RES_201	lost[10A4]
R1007	RES_201	lost[10A3]
R1008	RES_201	lost[10C7]
R1009	RES_201	lost[10C4]
R1010	RES_201	lost[10C7]
R1011	RES_201	lost[10C4]
R1012	RES_201	lost[10B2]
R1015	RES_201	lost[10B2]
R1017	RES_201	lost[10B2]
R1019	RES_201	lost[10B2]
R1020	RES_201	lost[10C4]
R1021	RES_201	lost[10B3]
R1022	RES_201	lost[10B3]
R1027	RES_201	lost[10A4]
R1050	RES_201	lost[10C4]
R1060	RES_201	lost[10C2]
R1061	RES_201	lost[10C1]
R1090	RES_201	lost[10D2]
R1091	RES_201	lost[10D2]
R1092	RES_201	lost[10D2]
R1093	RES_201	lost[10D1]
R1094	RES_201	lost[10D2]
R1095	RES_201	lost[10B8]
R1096	RES_201	lost[10B8]
R1097	RES_201	lost[10A4]
R1098	RES_201	lost[10A4]
R1101	RES_201	lost[11B3]
R1102	RES_201	lost[11C2]
R1103	RES_201	lost[11B2]
R1205	RES_201	lost[12B2]
R1250	RES_201	lost[12B3]
R1291	RES_201	lost[12A3]
R1400	RES_201	lost[14A5]
R1401	RES_201	lost[14A5]
R1402	RES_201	lost[14C4]
R1403	RES_201	lost[14C8]
R1490	RES_201	lost[14C4]
R1500	RES_201	lost[15B6]
R1503	RES_201	lost[15C1]
R1504	RES_201	lost[15C1]
R1505	RES_201	lost[15C1]
R1506	RES_201	lost[15C1]
R1507	RES_201	lost[15B1]
R1508	RES_201	lost[15B1]
R1509	RES_201	lost[15B2]
R1514	RES_201	lost[15C2]
R1515	RES_201	lost[15C2]
R1530	RES_201	lost[15A7]
R1531	RES_201	lost[15A7]
R1532	RES_201	lost[15A7]
R1533	RES_201	lost[15A7]
R1540	RES_201	lost[15C2]
R1541	RES_201	lost[15C2]
R1542	RES_201	lost[15B2]
R1543	RES_201	lost[15B2]
R1802	RES_201	lost[18B3]
R1803	RES_201	lost[18B2]
R1804	RES_201	lost[18A2]
R1805	RES_201	lost[18D4]
R1806	RES_201	lost[18C2]
R1807	RES_201	lost[18C5]
R1808	RES_201	lost[18B4]
R1809	RES_201	lost[18A5]
R1810	RES_201	lost[18A4]
R1812	RES_402	lost[18B2]
R1813	RES_201	lost[18B2]
R1814	RES_402	lost[18B4]
R1815	RES_201	lost[18B4]
R1816	RES_201	lost[18D2]
R1817	RES_201	lost[18B1]
R1818	RES_201	lost[18B3]
R1819	RES_201	lost[18C4]
R1821	RES_201	lost[18B5]
R1822	RES_201	lost[18A5]
R1823	RES_201	lost[18A5]
R1827	RES_201	lost[18C3]
R1828	RES_201	lost[18C4]
R1830	RES_402	lost[18A4]
R1831	RES_201	lost[18A4]
R1832	RES_402	lost[18B2]
R1833	RES_201	lost[18B2]
R1927	RES_402	lost[19D6]
R1928	RES_201	lost[19C8]
R1929	RES_402	lost[19D6]
R1930	RES_402	lost[19D8]
R1931	RES_805	lost[19D7]
R1932	RES_201	lost[19B7]
R1933	RES_201	lost[19B8]
R1934	RES_201	lost[19B8]
R1935	RES_201	lost[19D7]
R1936	RES_1206-1	lost[19C4]
R1940	RES_201	lost[19B3]
R1941	RES_201	lost[19B3]
R1942	RES_201	lost[19A3]
R1943	RES_201	lost[19A4]
R1944	RES_201	lost[19A3]
R1947	RES_1206	lost[19C3]
R1948	RES_201	lost[19C6]
R1949	RES_201	lost[19C6]
R1950	RES_201	lost[19B3]
R1951	RES_201	lost[19A3]
R1952	RES_201	lost[19A1]
R1953	RES_201	lost[19B2]
R1954	RES_201	lost[19B3]
R1955	RES_201	lost[19C5]
R1956	RES_201	lost[19B8]
R1957	RES_1206	lost[19C2]
R1960	RES_402	lost[19D7]
R1961	RES_201	lost[19C7]
R1962	RES_201	lost[19B1]
R1964	RES_402	lost[19A8]
R1965	RES_201	lost[19A8]
R1967	RES_201	lost[19B3]
R1968	RES_201	lost[19D6]
R1969	RES_201	lost[19B3]
R1970	RES_201	lost[19B3]
R1971	RES_201	lost[19C2]
R1972	RES_201	lost[19B3]
R1973	RES_201	lost[19C3]
R2000	RES_201	lost[20D6]
R2001	RES_201	lost[20D5]
R2002	RES_201	lost[20C8]
R2003	RES_201	lost[20B7]
R2005	RES_201	lost[20C4]
R2006	RES_201	lost[20B6]
R2007	RES_201	lost[20B3]
R2008	RES_201	lost[20B3]
R2009	RES_201	lost[20B4]
R2010	RES_201	lost[20C7]
R2011	RES_201	lost[20B4]
R2012	RES_201	lost[20C7]
R2013	RES_201	lost[20A4]
R2014	RES_201	lost[20A7]
R2015	RES_201	lost[20A7]
R2016	RES_201	lost[20B5]
R2018	RES_201	lost[20C5]
R2019	RES_201	lost[20B8]
R2020	RES_201	lost[20B7]
R2100	RES_201	lost[21C6]
R2101	RES_201	lost[21C8]
R2102	RES_201	lost[21C6]
R2103	RES_201	lost[21C6]
R2104	RES_201	lost[21A5]
R2105	RES_201	lost[21A5]
R2106	RES_201	lost[21A5]
R2107	RES_201	lost[21A3]
R2108	RES_201	lost[21A3]
R2109	RES_201	lost[21B3]
R2110	RES_201	lost[21B3]
R2113	RES_201	lost[21A7]
R2114	RES_201	lost[21A7]
R2117	RES_201	lost[21A6]
R2118	RES_201	lost[21C6]
R2120	RES_201	lost[21C6]
R2122	RES_201	lost[21B4]
R2123	RES_201	lost[21B3]
R2124	RES_201	lost[21B3]
R2250	RES_201	lost[22D6]
R2252	RES_201	lost[22C4]
R2253	RES_201	lost[22C4]
R2254	RES_201	lost[22C3]
R2255	RES_201	lost[22C5]
R2300	RES_201	lost[23C7]
R2320	RES_201	lost[23C6]
R2321	RES_201	lost[23C6]
R2322	RES_201	lost[23B7]
R2323	RES_201	lost[23B6]
R2324	RES_201	lost[23B4]
R2402	RES_402	lost[24D6]
R2403	RES_201	lost[24C3]
R2404	RES_201	lost[24C3]
R2451	RES_201	lost[24B6]
R2452	RES_201	lost[24B4]
R2453	RES_201	lost[24B4]
R2454	RES_201	lost[24B4]
R2455	RES_201	lost[24B2]
R2456	RES_201	lost[24A3]
R2457	RES_201	lost[24B3]
R2600	RES_201	lost[26C4]
R2601	RES_201	lost[26B2]
R2602	RES_201	lost[26B6]
R2603	RES_201	lost[26A5]
R2604	RES_201	lost[26A5]
R2605	RES_201	lost[26A5]
R2606	RES_201	lost[26A6]
R2607	RES_201	lost[26B7]
R2608	RES_201	lost[26A6]
R2609	RES_402	lost[26B7]
R2610	RES_402	lost[26C3]
R2611	RES_201	lost[26C3]
R2612	RES_201	lost[26C3]
R2613	RES_201	lost[26C4]
R2614	RES_201	lost[26B3]
R2615	RES_201	lost[26B7]
R2708	RES_201	lost[27A5]
R2711	RES_201	lost[27A8]
R2721	RES_201	lost[27C3]
R2722	RES_201	lost[27C3]
R2751	RES_201	lost[27B8]
R2752	RES_201	lost[27B8]
R2753	RES_201	lost[27B8]
R2754	RES_201	lost[27B8]
R2755	RES_201	lost[27A8]
R2756	RES_201	lost[27A8]
R2800	RES_201	lost[28C2]
R2801	RES_201	lost[28C2]
R2805	RES_201	lost[28D1]
R2806	RES_201	lost[28D3]
R2807	RES_201	lost[28D1]
R2808	RES_201	lost[28C1]
R2900	RES_201	lost[29D1]
R2904	RES_201	lost[29C1]
R2905	RES_201	lost[29B2]
R2907	RES_201	lost[29D5]
R2908	RES_201	lost[29D5]
R2909	RES_201	lost[29C5]
R2910	RES_201	lost[29C5]
R2911	RES_201	lost[29D5]
R2912	RES_201	lost[29C5]
R2913	RES_201	lost[29C5]
R2920	RES_201	lost[29C5]
R2922	RES_201	lost[29D2]
R2925	RES_201	lost[29D3]
R2930	RES_201	lost[29D4]
R2940	RES_201	lost[29C2]
R2942	RES_201	lost[29B3]
R2943	RES_201	lost[29B3]
R2944	RES_201	lost[29D5]

R2945	RES_201	lost[29D5]
R2946	RES_201	lost[29C2]
R2947	RES_201	lost[29B3]
R2948	RES_201	lost[29D4]
R2990	RES_201	lost[29C5]
R2991	RES_201	lost[29C5]
R3001	RES_201	lost[30D1]
R3005	RES_201	lost[30D1]
R3009	RES_201	lost[30A3]
R3010	RES_201	lost[30D3]
R3011	RES_201	lost[30C3]
R3012	RES_201	lost[30A3]
R3050	RES_201	lost[30C4]
R3051	RES_201	lost[30C4]
R3052	RES_201	lost[30C4]
R3060	RES_201	lost[30D2]
R3066	RES_201	lost[30B3]
R3080	RES_402	lost[30D3]
R3081	RES_402	lost[30D3]
R3090	RES_402	lost[30A1]
R3091	RES_402	lost[30A1]
R3100	RES_201	lost[31B3]
R3101	RES_201	lost[31D4]
R3102	RES_201	lost[31D2]
R3107	RES_201	lost[31B6]
R3108	RES_201	lost[31B6]
R3109	RES_201	lost[31A6]
R3150	RES_201	lost[31B3]
R3160	RES_201	lost[31C5]
R3190	RES_201	lost[31D6]
R3191	RES_201	lost[31D6]
R3200	RES_201	lost[32C4]
R3201	RES_201	lost[32C4]
R3203	RES_201	lost[32D7]
R3204	RES_201	lost[32D7]
R3205	RES_201	lost[32C8]
R3206	RES_201	lost[32C3]
R3207	RES_201	lost[32C3]
R3300	RES_201	lost[33C5]
R3301	RES_201	lost[33C5]
R3302	RES_201	lost[33C6]
R3303	RES_201	lost[33C6]
R3304	RES_201	lost[33C3]
R3500	RES_201	lost[35D2]
R3501	RES_201	lost[35C2]
R3504	RES_201	lost[35B4]
R3505	RES_201	lost[35C3]
R3512	RES_201	lost[35D6]
R3514	RES_201	lost[35C6]
R3515	RES_201	lost[35B6]
R3516	RES_201	lost[35D6]
R3518	RES_201	lost[35C1]
R3519	RES_201	lost[35B1]
R3600	RES_201	lost[36A5]
R3610	RES_201	lost[36C7]
R3611	RES_201	lost[36B6]
R3612	RES_201	lost[36B6]
R3613	RES_201	lost[36B5]
R3614	RES_201	lost[36B5]
R3615	RES_201	lost[36B5]
R3616	RES_201	lost[36D7]
R3617	RES_201	lost[36B3]
R3701	RES_201	lost[37B6]
R3702	RES_201	lost[37B6]
R3703	RES_201	lost[37B6]
R3704	RES_201	lost[37B6]
R3710	RES_201	lost[37A5]
R3810	RES_201	lost[38B6]
R3811	RES_201	lost[38B6]
R3820	RES_201	lost[38A6]
R3821	RES_201	lost[38A6]
R3840	RES_201	lost[38B3]
R3841	RES_201	lost[38B3]
R3842	RES_201	lost[38B3]
R3843	RES_201	lost[38B2]
R3950	RES_201	lost[39A7]
R3951	RES_201	lost[39A6]
R4000	RES_402	lost[40C7]
R4001	RES_402	lost[40C7]
R4010	RES_201	lost[40C6]
R4011	RES_201	lost[40C6]
R4015	RES_201	lost[40C7]
R4016	RES_201	lost[40C7]
R4020	RES_201	lost[40B6]
R4021	RES_201	lost[40B6]
R4025	RES_201	lost[40B7]
R4026	RES_201	lost[40B7]
R4050	RES_201	lost[40B2]
R4200	RES_201	lost[42D2]
R4201	RES_201	lost[42D3]
R4202	RES_201	lost[42C3]
R4203	RES_201	lost[42D6]
R4204	RES_201	lost[42D7]
R4205	RES_201	lost[42C7]
R4210	RES_201	lost[42B3]
R4211	RES_201	lost[42B3]
R4220	RES_201	lost[42B7]
R4221	RES_201	lost[42B7]
R4222	RES_201	lost[42A6]
R4300	RES_402	lost[43D5]
R4301	RES_402	lost[43B4]
R4302	RES_402	lost[43B4]
R4305	RES_603	lost[43C5]
R5000	RES_201	lost[50A7]
R5002	RES_201	lost[50C7]
R5070	RES_201	lost[50B4]
R5071	RES_201	lost[50A4]
R5072	RES_201	lost[50A4]
R5080	RES_201	lost[50C7]
R5090	RES_201	lost[50C7]
R5100	RES_201	lost[51A7]
R5102	RES_201	lost[51C7]
R5170	RES_201	lost[51B4]
R5171	RES_201	lost[51B4]
R5172	RES_201	lost[51A4]
R5180	RES_201	lost[51C7]
R5190	RES_201	lost[51C7]
R5200	RES_201	lost[52C6]
R5201	RES_201	lost[52C6]
R5202	RES_201	lost[52B6]
R5203	RES_201	lost[52B6]
R5220	RES_201	lost[52C3]
R6602	RES_201	lost[66B2]
R6611	RES_201	lost[66B2]

R6612	RES_201	lost[66B2]
R6700	RES_201	lost[67B7]
R6701	RES_201	lost[67B7]
R6702	RES_201	lost[67B7]
R6703	RES_201	lost[67B7]
R6704	RES_201	lost[67B7]
R6705	RES_201	lost[67B7]
R6706	RES_201	lost[67B7]
R6707	RES_201	lost[67B7]
R6710	RES_201	lost[67B4]
R6711	RES_201	lost[67B4]
R6712	RES_201	lost[67B4]
R6713	RES_201	lost[67B4]
R6714	RES_201	lost[67B4]
R6715	RES_201	lost[67B4]
R6716	RES_201	lost[67B4]
R6717	RES_201	lost[67B4]
R7503	RES_201	lost[75B7]
R7504	RES_201	lost[75B7]
R7505	RES_201	lost[75B7]
R7506	RES_201	lost[75B3]
R7507	RES_201	lost[75B3]
R7508	RES_201	lost[75C3]
R7509	RES_201	lost[75B3]
R7510	RES_201	lost[75C3]
R7511	RES_201	lost[75C3]
R7520	RES_201	lost[75B7]
R7521	RES_201	lost[75B7]
R7522	RES_201	lost[75B7]
R7600	RES_201	lost[76C7]
R7610	RES_201	lost[76B7]
R7611	RES_201	lost[76B7]
R7612	RES_201	lost[76B6]
R7613	RES_201	lost[76C7]
R7614	RES_201	lost[76C7]
R7615	RES_201	lost[76C6]
R7616	RES_201	lost[76C4]
R7617	RES_201	lost[76C3]
R7618	RES_201	lost[76B3]
R7620	RES_201	lost[76C6]
R7621	RES_201	lost[76C6]
R7650	RES_201	lost[76A5]
R9003	RES_201	lost[90C6]
R9004	RES_201	lost[90B2]
R9005	RES_201	lost[90B7]
R9010	RES_201	lost[90B6]
R9011	RES_201	lost[90A4]
R9012	RES_201	lost[90A5]
R9013	RES_201	lost[90A4]
R9020	RES_201	lost[90C4]
R9050	RES_201	lost[90B4]
R9051	RES_201	lost[90B6]
R9052	RES_201	lost[90B5]
R9407	RES_201	lost[94B4]
R9408	RES_201	lost[94A4]
R9409	RES_201	lost[94A5]
R9410	RES_201	lost[94A5]
R9418	RES_201	lost[94B4]
R9419	RES_201	lost[94A6]
R9450	RES_201	lost[94A7]
R9460	RES_201	lost[94C5]
R9490	RES_201	lost[94B4]
R9491	RES_201	lost[94B4]
R9492	RES_201	lost[94B4]
R9600	RES_201	lost[96B2]
R9601	RES_201	lost[96B5]
TP0900	TP_SM-TP25-TOP	lost[9D3]
TP0901	TP_SM-TP25-TOP	lost[9D3]
U0600	SILVERTHORNE_BGA	lost[6D7 6C3]
U0600	SILVERTHORNE_BGA	lost[7D8 7D5]
U0800	POULSBO_BGA	lost[8D5]
U0800	POULSBO_BGA	lost[9D5]
U0800	POULSBO_BGA	lost[10D6]
U0800	POULSBO_BGA	lost[11D5]
U0800	POULSBO_BGA	lost[12D7]
U0800	POULSBO_BGA	lost[13D8 13D6 13D4 13D2]
U1400	SDRAM_32MX16_84P_FBGA	lost[14D2]
U1401	SDRAM_32MX16_84P_FBGA	lost[14B3]
U1402	SDRAM_32MX16_84P_FBGA	lost[14D7]
U1403	SDRAM_32MX16_84P_FBGA	lost[14B7]
U1500	CLK_GEN_SLG8SP528_QFN	lost[15C5]
U1901	INA210_SC70	lost[19D2]
U1910	LTC6102_DFN	lost[19D8]
U1911	OPAMP_LMC7111_SOT23-5-LF	lost[19B7]
U1912	LTC38351_DFN	lost[19D6]
U1913	OPAMP_LMC7111_SOT23-5-LF	lost[19A3]
U1914	OPAMP_LTC2053_DFN_DFN	lost[19C3]
U1915	OPAMP_LMC7111_SOT23-5-LF	lost[19A2]
U2000	SC454_MPLD	lost[20C5]
U2100	LTC3785_QFN	lost[21D6]
U2101	ISL8013_QFN	lost[21A4]
U2201	SC120_MLPD	lost[22B5]
U2250	TPS62510_BQA	lost[22C5]
U2300	74LVC1G07_SOT886	lost[23C7]
U2302	TPS51116_QFN	lost[23B6]
U2400	DCDC_LT3470A_DFN	lost[24D6]
U2450	LTC3531_DFN	lost[24B5]
U2600	SC440_MLPQ	lost[26C5]
U2700	ISL6130_QFN	lost[27B7]
U2800	HS82117_LGA	lost[28B7 28D7 28D3]
U2900	STM6778_SOT23-6	lost[29D7]
U2901	VREF_REF3133_SOT23-3	lost[29C8]
U2902	74LVC1G32GF_SOT891	lost[29D8]
U3000	TPS61045_QFN	lost[30A4]
U3001	CY8C24994_BGA_VFBGA	lost[30D3]
U3002	MARIO_LITE_BGA	lost[30D6]
U3003	MARIO_LITE_BGA	lost[30D8]
U3004	MARIO_LITE_BGA	lost[30D5]
U3100	ZEPHYR_BGA-HF	lost[31D4]
U3101	BCM5974_FBGA	lost[31D7]
U3102	FLASH_SST25VF020_QFN	lost[31D2]
U3150	74AHC1G14_SC70-LF	lost[31B2]
U3300	FLASH_M25P16_VFQFPN	lost[33C4]
U3400	LIS331DL_LGA	lost[34B5]
U3500	TMP106_WCSP-6	lost[35D3]

U3501	SWI_FSUSB42_UMLP	lost[35A3]
U3502	74LVC2G66_BGA	lost[35D7 35D7]
U3504	74LVC2G66_BGA	lost[35B7 35C7]
U3600	CS4206_QFN	lost[36D5]
U3601	MAX8840_UDFN	lost[36A4]
U3700	MAX9705_TDFN1	lost[37B4]
U3800	MAX9724A_TQFN	lost[38D6]
U4050	STG3684A_QFN10L	lost[40C2]
U4210	CD3272_WCSP9	lost[42B3]
U4220	CD3272_WCSP9	lost[42B6]
U4300	EMC1043_MSOP	lost[43D5]
U5000	SUPPR_NUP412VP5_SOT953	lost[50B2]
U5100	SUPPR_NUP412VP5_SOT953	lost[51A2]
U5200	SWI_LM34902_USMD	lost[52C6]
U5201	SWI_LM34902_USMD	lost[52C6]
U5202	74CB3Q3244_QFN	lost[52C2]
U6600	PS2231_LQFP	lost[66C5]
U6700	FLASH_8GX8_48P7_TSOP	lost[67C6]
U6710	FLASH_8GX8_48P7_TSOP	lost[67C3]
U7501	THS7318_BGA	lost[75C7]
U7600	A1010_WLCSP48	lost[76C5]
U7601	MAX8510_SC70-5	lost[76D6]
U9400	CH7021A_QFN	lost[94C6]
U9600	BT_WIFI_MOD_M53_SM	lost[96C5]
U9700	FT232R_QFN	lost[97C5]
XW1201	SHORT_SM	lost[12B1]
XW1700	SHORT_SHORT-0201	lost[17B7]
XW1701	SHORT_SHORT-0201	lost[17C2]
XW1900	SHORT_SHORT-0201	lost[19C5]
XW1901	SHORT_SHORT-0201	lost[19D7]
XW1902	SHORT_SHORT-0201	lost[19D7]
XW1903	SHORT_SHORT-0201	lost[19B4]
XW1904	SHORT_SHORT-0201	lost[19B4]
XW1905	SHORT_SHORT-0201	lost[19C3]
XW1906	SHORT_SHORT-0201	lost[19C3]
XW2000	SHORT_SHORT-0201	lost[20B5]
XW2100	SHORT_SHORT-0201	lost[21B3]
XW2101	SHORT_SHORT-0201	lost[21A4]
XW2201	SHORT_SHORT-0201	lost[22A5]
XW2300	SHORT_SHORT-0201	lost[23B5]
XW2301	SHORT_SHORT-0201	lost[23C5]
XW2302	SHORT_SHORT-0201	lost[23C4]
XW2303	SHORT_SHORT-0201	lost[23A5]
XW2400	SHORT_SHORT-0201	lost[24C3]
XW2450	SHORT_SHORT-0201	lost[24A5]
XW2600	SHORT_SHORT-0201	lost[26B3]
XW2800	SHORT_SM	lost[28C2]
XW3000	SHORT_SM	lost[30A4]
XW3600	SHORT_SM	lost[36A5]
XW3601	SHORT_SM	lost[36B6]
XW3602	SHORT_SM	lost[36B6]
XW3700	SHORT_SM	lost[37A6]
XW3701	SHORT_SM	lost[37B6]
XW3950	SHORT_SM	lost[39A6]
XW3951	SHORT_SM	lost[39A6]
XW3952	SHORT_SM	lost[39A6]
XW3953	SHORT_SM	lost[39A6]
XW3954	SHORT_SM	lost[39A6]
XW3955	SHORT_SM	lost[39A6]
XW4210	SHORT_SM	lost[42B3]
XW4220	SHORT_SM	lost[42B6]
XW5000	SHORT_SHORT-0201	lost[50A2]
XW5100	SHORT_SHORT-0201	lost[51A2]
XW7600	SHORT_SM	lost[76C6]
Y0900	CRYSTAL_3.2X1.5X.6-8M	lost[9D3]
Y1500	CRYSTAL_4PIN_SM-2.5X2.0MM	lost[15C6]
Y2900	CRYSTAL_4PIN_SM-2.5X2.0MM	lost[29C7]
Y6600	CRYSTAL_4PIN_SM-3.2X2.5MM	lost[66C7]
Y9400	CRYSTAL_4PIN_SM-2.5X2.0MM	lost[94B7]