PG190-A02

GA104/GA106 GB5256
DP + DP + DP + HDMI/DP

TABLE OF CONTENTS

Page Description

1 Table of Contents
2 BLOCK DIAGRAM
3 PCI Express
4 PCIe GEN4 RC Termination
5 MEMORY: GPU Partition A/B
6 MEMORY: FBA Partation 32..0
7 MEMORY: FBA Partition 63..32
8 MEMORY: FBB Partition 31..0
9 MEMORY: FBB Partition 63..32
10 MEMORY: GPU Partition C/D
11 MEMORY: FBC Partition 31..0
12 MEMORY: FBC Partition 63..32
13 MEMORY: FBD Partition 31..0
14 MEMORY: FBD Partition 63..32
15 GPU PWR and GND
16 GPU PWR and GND 2
17 GPU XVDD
18 GPU DECOUPLING FBVDDQ
19 GPU DECOUPLING NVVDD
20 GPU DECOUPLING NVVDD 2
21 IFPAB DVI-D-DL
22 IFPF DP
23 IFPE DP
24 IFPD DP
25 IFPC HDMI/DP

Page Description

26 MISC: ROM, XTAL, STRAPS
27 MISC2: JTAG,GPIO,ADC.12C,OVERT
28 Blank
29 PS: 1V8
30 PS: 5V
31 PS: PEXVDD
32 PS: FBVDDQ
33 PS: FBVDDQ PH2
34 PS: NVVDD CNTL
35 PS: NVVDD PHASE 1 & 2
36 PS: NVVDD PHASE 3 & 5
37 PS: NVVDD PHASE 4
38 PS: NVVDD PHASE 6 & 8
39 PS: NVVDD PHASE 7
40 Blank
41 INPUT SWITCH RTD3
42 INPUT POWER, FILTERING
43 MISC: Hot Unplug
44 SEQ: 3V3_SEQ,DDC_5V,DP_AUX_PROT
45 SEQ: NVVDD, PEXVDD AND FBVDDQ ENABLE
46 SEQ: MISC
47 SEQUENCE: VOLTAGE MONITOR
48 FAN & LED
49 OVRM POWER SENSE
50 MECH

ASSEMBLY <ASSEMBLY_DESCRIPTION>
PAGE DETAIL Table of Contents

ALL NVIDIA DESIGN SPECIFICATIONS, REFERENCE SPECIFICATIONS, REFERENCE BOARDS, FILES, DRAWINGS, DIAGNOSTICS, LISTS AND OTHER DOCUMENTS OR INFORMATION (TOGETHER AND SEPARATELY, 'MATERIALS') ARE BEING PROVIDED 'AS IS'. THE MATERIALS MAY CONTAIN KNOWN AND UNKNOWN VIOLATIONS OR DEVIATIONS OF INDUSTRY STANDARDS AND SPECIFICATIONS. NVIDIA MAKES NO WARRANTIES, EXPRESSED, IMPLIED, STATUTORY OR OTHERWISE WITH RESPECT TO THE MATERIALS OR OTHERWISE, AND EXPRESSLY DISCLAIMS ALL IMPLIED WARRANTIES INCLUDING, WITHOUT LIMITATION, THE WARRANTIES OF DESIGN, OF NONINFRINGEMENT, MERCHANTABILITY OR FITNESS FOR A PARTICULAR PURPOSE, OR ARISING FROM A COURSE OF DEALING, TRADE USAGE, TRADE PRACTICE, OR INDUSTRY STANDARDS.

GIGABYTE
Title PCIE
Size Custom
Document Number GV-N3060VISION OC-12GD
Rev 1.01
Date: Thursday, January 14, 2021
Sheet 1 of 54

Page2: Block Diagram

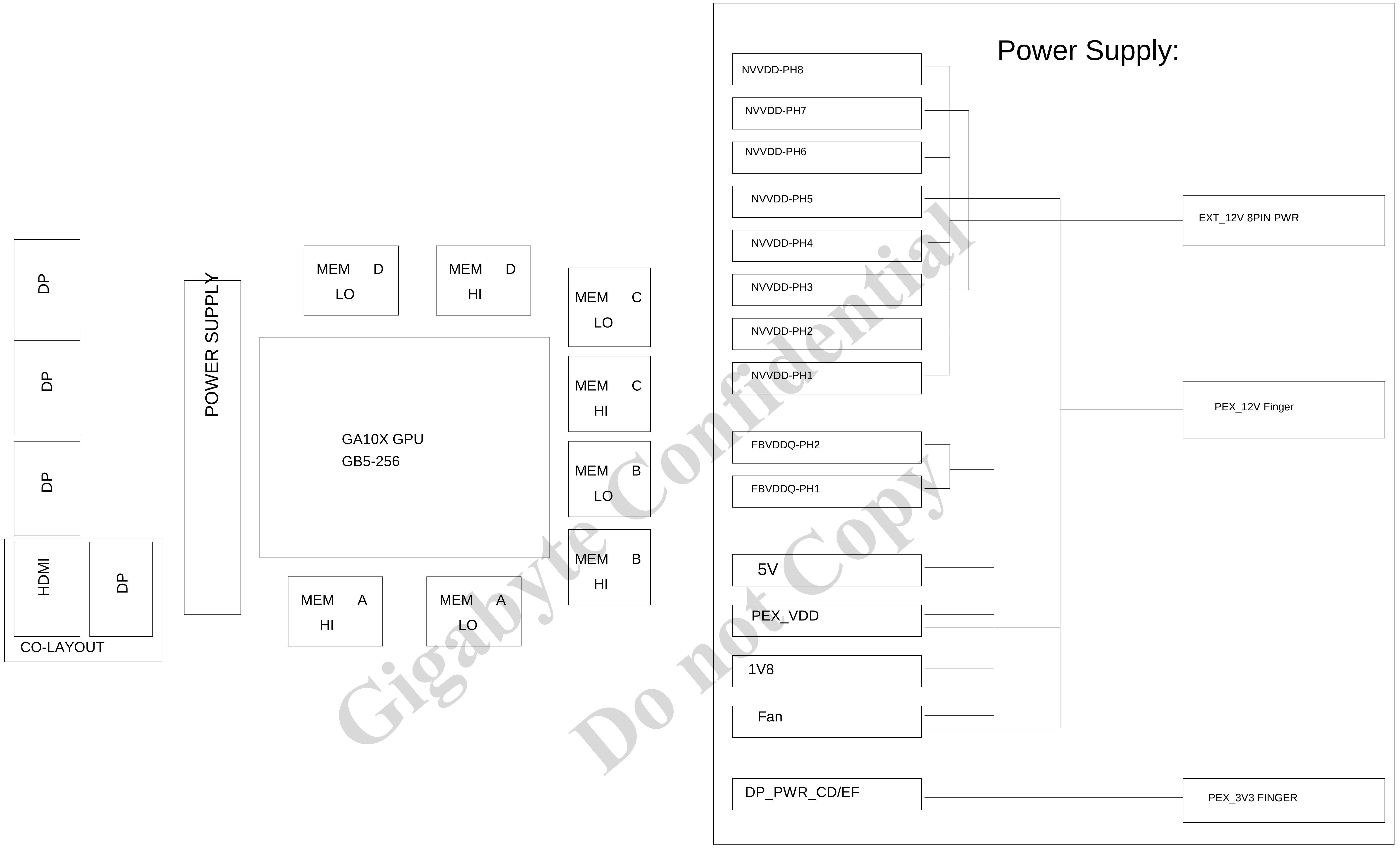
DP
DP
DP
HDMI
DP
CO-LAYOUT
POWER SUPPLY
MEM D LO
MEM D HI
MEM C LO
MEM C HI
MEM B LO
MEM B HI
MEM A HI
MEM A LO
GA10X GPU
GB5-256
Power Supply:
NVVDD-PH8
NVVDD-PH7
NVVDD-PH6
NVVDD-PH5
NVVDD-PH4
NVVDD-PH3
NVVDD-PH2
NVVDD-PH1
FBVDDQ-PH2
FBVDDQ-PH1
5V
PEX_VDD
1V8
Fan
DP_PWR_CD/EF
EXT_12V 8PIN PWR
PEX_12V Finger
PEX_3V3 FINGER

ASSEMBLY	<ASSEMBLY_DESCRIPTION>
PAGE DETAIL	BLOCK DIAGRAM

ALL NVIDIA DESIGN SPECIFICATIONS, REFERENCE SPECIFICATIONS, REFERENCE BOARDS, FILES, DRAWINGS, DIAGNOSTICS, LISTS AND OTHER DOCUMENTS OR INFORMATION (TOGETHER AND SEPARATELY, 'MATERIALS') ARE BEING PROVIDED 'AS IS'. THE MATERIALS MAY CONTAIN KNOWN AND UNKNOWN VIOLATIONS OR DEVIATIONS OF INDUSTRY STANDARDS AND SPECIFICATIONS. NVIDIA MAKES NO WARRANTIES, EXPRESSED, IMPLIED, STATUTORY OR OTHERWISE WITH RESPECT TO THE MATERIALS OR OTHERWISE, AND EXPRESSLY DISCLAIMS ALL IMPLIED WARRANTIES INCLUDING, WITHOUT LIMITATION, THE WARRANTIES OF DESIGN, OF NONINFRINGEMENT, MERCHANTABILITY OR FITNESS FOR A PARTICULAR PURPOSE, OR ARISING FROM A COURSE OF DEALING, TRADE USAGE, TRADE PRACTICE, OR INDUSTRY STANDARDS.

GIGABYTE

Title
PCIE

Size: Custom
Document Number: GV-N3060VISION OC-12GD
Rev: 1.01
Date: Thursday, January 14, 2021
Sheet 2 of 54

Page3: PCI Express

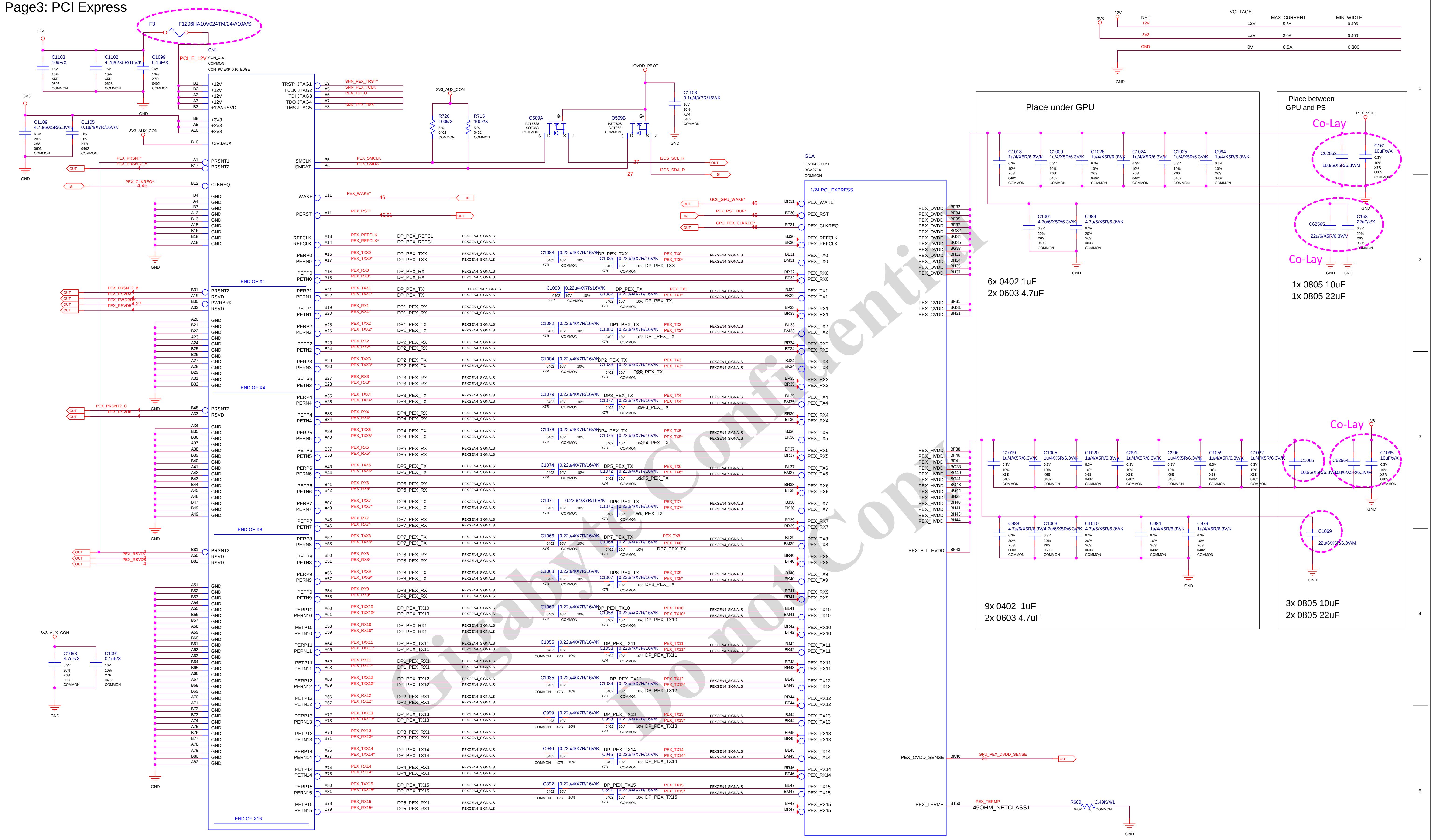
F3
F1206HA10V024TM/24V/10A/S
12V
3V3
PCI_E_12V
CN1
CON_X16
CON_PCIEXP_X16_EDGE
C1103 10uF/X
C1102 4.7u/6/X5R/16V/K
C1099 0.1uF/X
C1109 4.7u/6/X5R/6.3V/K
C1105 0.1u/4/X7R/16V/K
3V3_AUX_CON
+12V
+12V/RSVD
+3V3
+3V3AUX
PRSNT1
PRSNT2
CLKREQ
GND
TRST* JTAG1
TCLK JTAG2
TDI JTAG3
TDO JTAG4
TMS JTAG5
SMCLK
SMDAT
WAKE
PERST
REFCLK
PEX_PRSNT*
PEX_PRSNT1_A
PEX_CLKREQ*
PEX_SMCLK
PEX_SMDAT
PEX_WAKE*
PEX_RST*
PEX_REFCLK
PEX_REFCLK*
END OF X1
END OF X4
END OF X8
END OF X16
PWRBRK
RSVD
PEX_PRSNT2_B
PEX_PRSNT2_C
PEX_RSVD3
PEX_PWRBRK
PEX_RSVD5
PEX_RSVD6
PEX_RSVD7
PEX_RSVD8
3V3_AUX_CON
C1093 4.7uF/X
C1091 0.1uF/X
R726 100k/X
R715 100k/X
Q509A
Q509B
PJT7828
SOT363
IOVDD_PROT
C1108 0.1u/4/X7R/16V/K
I2CS_SCL_R
I2CS_SDA_R
PERP0 … PERP15
PERN0 … PERN15
PETP0 … PETP15
PETN0 … PETN15
DP_PEX_REFCL
DP_PEX_TXX
DP_PEX_RX
DP_PEX_TX
DP1_PEX_TX … DP8_PEX_TX
DP1_PEX_RX … DP8_PEX_RX
DP_PEX_TX10 … DP_PEX_TX15
DP_PEX_RX10 … DP5_PEX_RX15
PEXGEN4_SIGNALS
0.22u/4/X7R/16V/K
G1A
GA104-300-A1
BGA2714
COMMON
1/24 PCI_EXPRESS
PEX_WAKE
PEX_RST
PEX_CLKREQ
PEX_REFCLK
PEX_TX0 … PEX_TX15
PEX_RX0 … PEX_RX15
GC6_GPU_WAKE*
PEX_RST_BUF*
GPU_PEX_CLKREQ*
PEX_DVDD
PEX_CVDD
PEX_HVDD
PEX_PLL_HVDD
PEX_CVDD_SENSE
GPU_PEX_DVDD_SENSE
PEX_TERMP
PEX_TERMP
45OHM_NETCLASS1
R689 2.49K/1/1
PEX_VDD
1V8
Co-Lay
C1018 C1009 C1026 C1024 C1025 C994
1u/4/X5R/6.3V/K
C161 10uF/X
C62563 10u/6/X5R/6.3V/M
C1001 4.7u/6/X5R/6.3V/K
C989 4.7u/6/X5R/6.3V/K
C62565 22u/6/X5R/6.3V/M
C163 22uF/X
C1019 C1005 C1020 C991 C996 C1059 C1022
C1065 C62564 C1095 10uF/X
C988 C1063 C1010 C984 C979
C1069 22u/6/X5R/6.3V/M
GND

Place under GPU

6x 0402 1uF
2x 0603 4.7uF

9x 0402 1uF
2x 0603 4.7uF

Place between
GPU and PS

1x 0805 10uF
1x 0805 22uF

3x 0805 10uF
2x 0805 22uF

NET	VOLTAGE	MAX_CURRENT	MIN_WIDTH
12V	12V	5.5A	0.406
3V3	12V	3.0A	0.400
GND	0V	8.5A	0.300

Gigabyte Confidential Do not Copy

ASSEMBLY <ASSEMBLY_DESCRIPTION>
PAGE DETAIL PCI Express

ALL NVIDIA DESIGN SPECIFICATIONS, REFERENCE SPECIFICATIONS, REFERENCE BOARDS, FILES, DRAWINGS, DIAGNOSTICS, LISTS AND OTHER DOCUMENTS OR INFORMATION (TOGETHER AND SEPARATELY, 'MATERIALS') ARE BEING PROVIDED 'AS IS'. THE MATERIALS MAY CONTAIN KNOWN AND UNKNOWN VIOLATIONS OR DEVIATIONS OF INDUSTRY STANDARDS AND SPECIFICATIONS. NVIDIA MAKES NO WARRANTIES, EXPRESSED, IMPLIED, STATUTORY OR OTHERWISE WITH RESPECT TO THE MATERIALS OR OTHERWISE, AND EXPRESSLY DISCLAIMS ALL IMPLIED WARRANTIES INCLUDING, WITHOUT LIMITATION, THE WARRANTIES OF DESIGN, OF NONINFRINGEMENT, MERCHANTABILITY OR FITNESS FOR A PARTICULAR PURPOSE, OR ARISING FROM A COURSE OF DEALING, TRADE USAGE, TRADE PRACTICE, OR INDUSTRY STANDARDS.

GIGABYTE

Title PCIE
Size Custom
Document Number GV-N3060VISION OC-12GD
Rev 1.01
Date: Thursday, January 14, 2021
Sheet 3 of 54

Page4: PCIE GEN4 RC TERMINATION

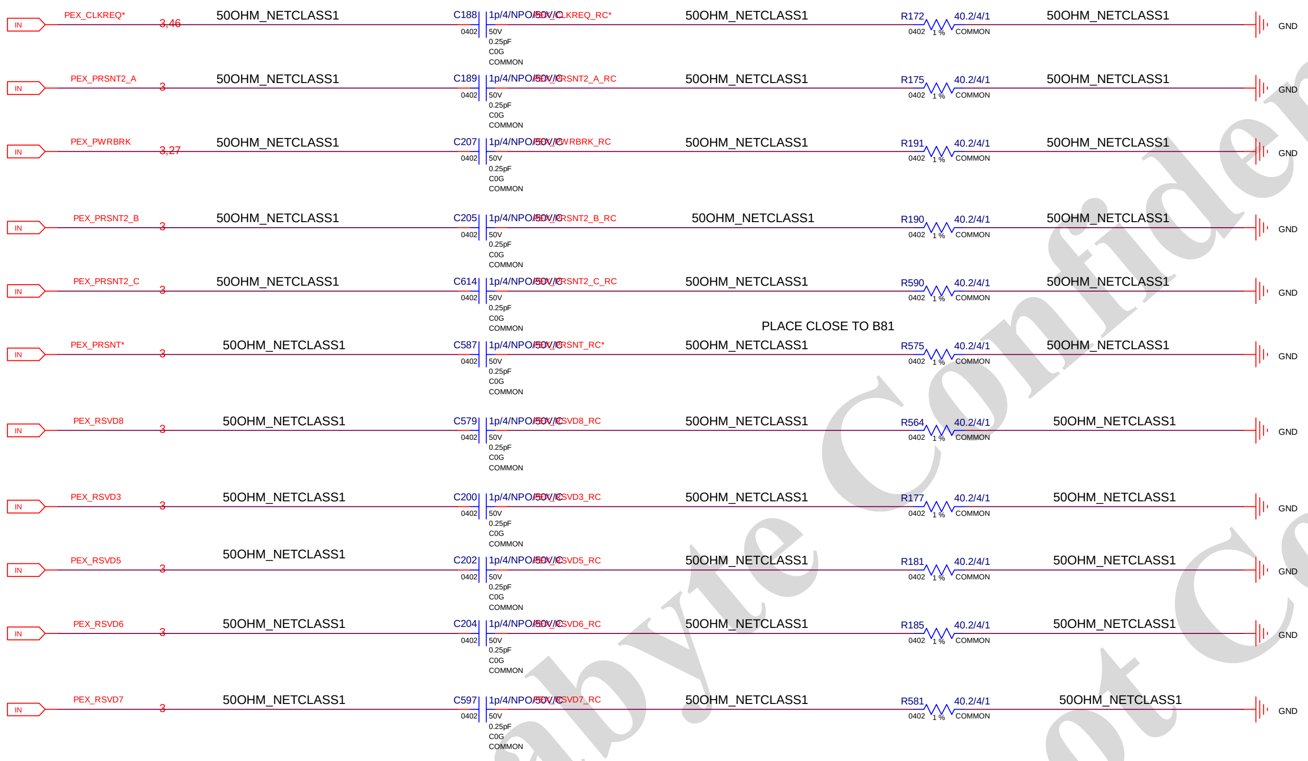
IN
PEX_CLKREQ*
3,46
50OHM_NETCLASS1
C188
0402
1p/4/NPO/50V/C
LKREQ_RC*
50V
0.25pF
C0G
COMMON
50OHM_NETCLASS1
R172
0402
1 %
40.2/4/1
COMMON
50OHM_NETCLASS1
GND
IN
PEX_PRSNT2_A
3
50OHM_NETCLASS1
C189
0402
1p/4/NPO/50V/C
RSNT2_A_RC
50V
0.25pF
C0G
COMMON
50OHM_NETCLASS1
R175
0402
1 %
40.2/4/1
COMMON
50OHM_NETCLASS1
GND
IN
PEX_PWRBRK
3,27
50OHM_NETCLASS1
C207
0402
1p/4/NPO/50V/C
WRBRK_RC
50V
0.25pF
C0G
COMMON
50OHM_NETCLASS1
R191
0402
1 %
40.2/4/1
COMMON
50OHM_NETCLASS1
GND
IN
PEX_PRSNT2_B
3
50OHM_NETCLASS1
C205
0402
1p/4/NPO/50V/C
RSNT2_B_RC
50V
0.25pF
C0G
COMMON
50OHM_NETCLASS1
R190
0402
1 %
40.2/4/1
COMMON
50OHM_NETCLASS1
GND
IN
PEX_PRSNT2_C
3
50OHM_NETCLASS1
C614
0402
1p/4/NPO/50V/C
RSNT2_C_RC
50V
0.25pF
C0G
COMMON
50OHM_NETCLASS1
R590
0402
1 %
40.2/4/1
COMMON
50OHM_NETCLASS1
GND
PLACE CLOSE TO B81
IN
PEX_PRSNT*
3
50OHM_NETCLASS1
C587
0402
1p/4/NPO/50V/C
RSNT_RC*
50V
0.25pF
C0G
COMMON
50OHM_NETCLASS1
R575
0402
1 %
40.2/4/1
COMMON
50OHM_NETCLASS1
GND
IN
PEX_RSVD8
3
50OHM_NETCLASS1
C579
0402
1p/4/NPO/50V/C
SVD8_RC
50V
0.25pF
C0G
COMMON
50OHM_NETCLASS1
R564
0402
1 %
40.2/4/1
COMMON
50OHM_NETCLASS1
GND
IN
PEX_RSVD3
3
50OHM_NETCLASS1
C200
0402
1p/4/NPO/50V/C
SVD3_RC
50V
0.25pF
C0G
COMMON
50OHM_NETCLASS1
R177
0402
1 %
40.2/4/1
COMMON
50OHM_NETCLASS1
GND
IN
PEX_RSVD5
3
50OHM_NETCLASS1
C202
0402
1p/4/NPO/50V/C
SVD5_RC
50V
0.25pF
C0G
COMMON
50OHM_NETCLASS1
R181
0402
1 %
40.2/4/1
COMMON
50OHM_NETCLASS1
GND
IN
PEX_RSVD6
3
50OHM_NETCLASS1
C204
0402
1p/4/NPO/50V/C
SVD6_RC
50V
0.25pF
C0G
COMMON
50OHM_NETCLASS1
R185
0402
1 %
40.2/4/1
COMMON
50OHM_NETCLASS1
GND
IN
PEX_RSVD7
3
50OHM_NETCLASS1
C597
0402
1p/4/NPO/50V/C
SVD7_RC
50V
0.25pF
C0G
COMMON
50OHM_NETCLASS1
R581
0402
1 %
40.2/4/1
COMMON
50OHM_NETCLASS1
GND

ASSEMBLY
PAGE DETAIL

<ASSEMBLY_DESCRIPTION>
PCIe GEN4 RC Termination

ALL NVIDIA DESIGN SPECIFICATIONS, REFERENCE SPECIFICATIONS, REFERENCE BOARDS, FILES, DRAWINGS, DIAGNOSTICS, LISTS AND OTHER DOCUMENTS OR INFORMATION (TOGETHER AND SEPARATELY, 'MATERIALS') ARE BEING PROVIDED 'AS IS'. THE MATERIALS MAY CONTAIN KNOWN AND UNKNOWN VIOLATIONS OR DEVIATIONS OF INDUSTRY STANDARDS AND SPECIFICATIONS. NVIDIA MAKES NO WARRANTIES, EXPRESSED, IMPLIED, STATUTORY OR OTHERWISE WITH RESPECT TO THE MATERIALS OR OTHERWISE, AND EXPRESSLY DISCLAIMS ALL IMPLIED WARRANTIES INCLUDING, WITHOUT LIMITATION, THE WARRANTIES OF DESIGN, OF NONINFRINGEMENT, MERCHANTABILITY OR FITNESS FOR A PARTICULAR PURPOSE, OR ARISING FROM A COURSE OF DEALING, TRADE USAGE, TRADE PRACTICE, OR INDUSTRY STANDARDS.

GIGABYTE

Title
PCIE

Size: Custom
Document Number: GV-N3060VISION OC-12GD
Rev: 1.01
Date: Thursday, January 14, 2021

Page5: MEMORY: GPU Partition A/B

//syseng/Projects/GA1xx/GA1XX_CMD-Mapping.xlsx

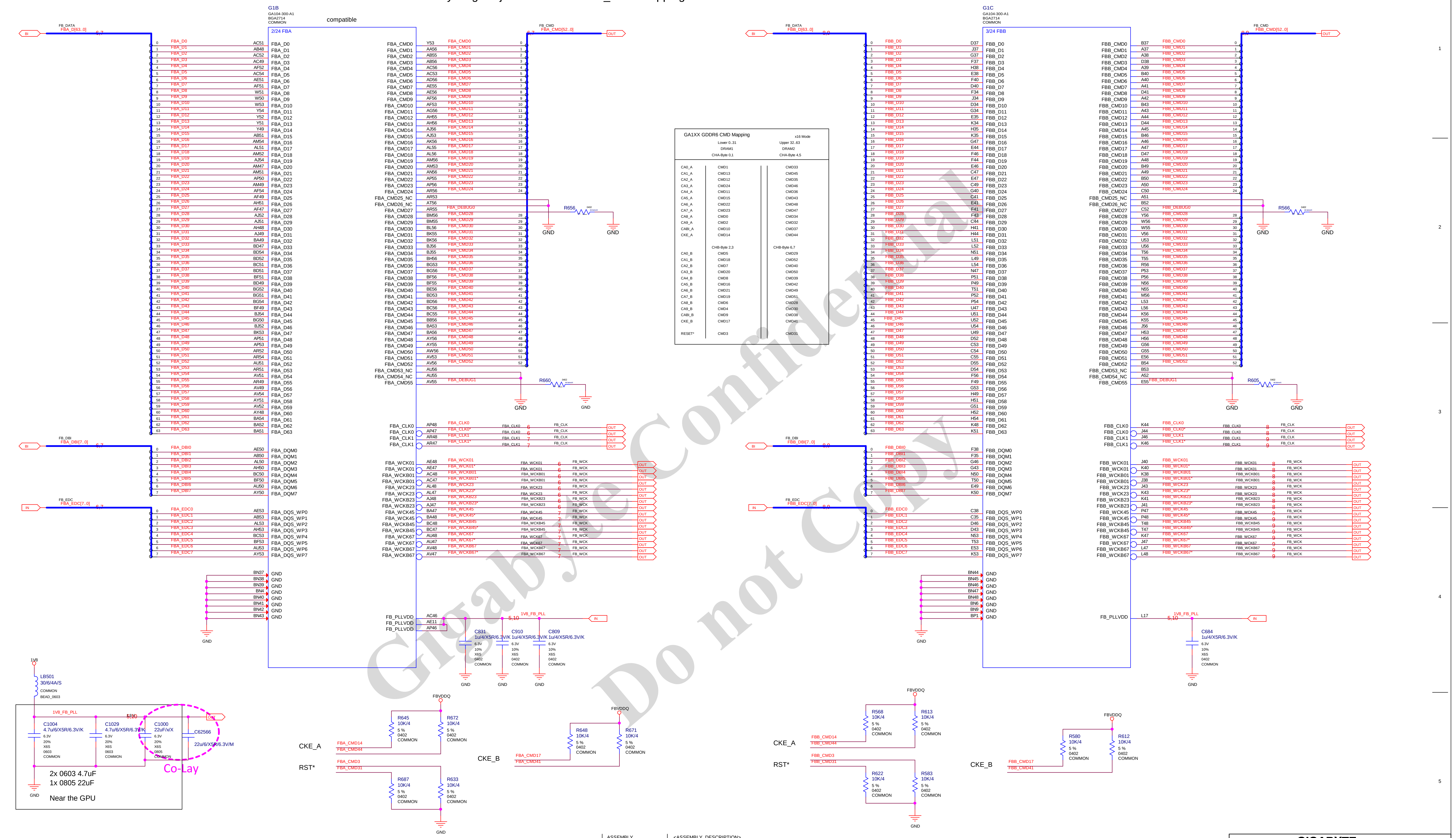

G1B
GA104-300-A1
BGA2714
COMMON
compatible
2/24 FBA
FB_DATA
FBA_D[63..0]
6,7
BI
FBA_D0 … FBA_D63
FBA_CMD0 … FBA_CMD55
FBA_CMD25_NC
FBA_CMD26_NC
FBA_CMD53_NC
FBA_CMD54_NC
FBA_DEBUG0
FBA_DEBUG1
FB_CMD
FBA_CMD[52..0]
OUT
R656
R660
0402
49.9ohm/X
GND
FB_DBI
FBA_DBI[7..0]
FBA_DQM0 … FBA_DQM7
FB_EDC
FBA_EDC[7..0]
IN
FBA_DQS_WP0 … FBA_DQS_WP7
FBA_CLK0
FBA_CLK0*
FBA_CLK1
FBA_CLK1*
FB_CLK
FBA_WCK01
FBA_WCK01*
FBA_WCKB01
FBA_WCKB01*
FBA_WCK23
FBA_WCK23*
FBA_WCKB23
FBA_WCKB23*
FBA_WCK45
FBA_WCK45*
FBA_WCKB45
FBA_WCKB45*
FBA_WCK67
FBA_WCK67*
FBA_WCKB67
FBA_WCKB67*
FB_WCK
FB_PLLVDD
AC46
AE11
AP46
1V8_FB_PLL
5,10
C831
C910
C809
1u/4/X5R/6.3V/K
6.3V
10%
X6S
0402
COMMON
G1C
GA104-300-A1
BGA2714
COMMON
3/24 FBB
FB_DATA
FBB_D[63..0]
8,9
FBB_D0 … FBB_D63
FBB_CMD0 … FBB_CMD55
FBB_CMD25_NC
FBB_CMD26_NC
FBB_CMD53_NC
FBB_CMD54_NC
FBB_DEBUG0
FBB_DEBUG1
FBB_CMD[52..0]
R566
R605
FBB_DBI[7..0]
FBB_DQM0 … FBB_DQM7
FBB_EDC[7..0]
FBB_DQS_WP0 … FBB_DQS_WP7
FBB_CLK0
FBB_CLK0*
FBB_CLK1
FBB_CLK1*
FBB_WCK01 … FBB_WCKB67*
L17
C684
1u/4/X5R/6.3V/K
1V8
LB501
30/6/4A/S
COMMON
BEAD_0603
1V8_FB_PLL
C1004
4.7u/6/X5R/6.3V/K
C1029
4.7u/6/X5R/6.3V/K
C1000
22uF/x/X
C62566
22u/6/X5R/6.3V/M
20%
0603
0805
Co-Lay
2x 0603 4.7uF
1x 0805 22uF
Near the GPU
FBVDDQ
R645
R672
R687
R633
R648
R671
R568
R613
R622
R583
R580
R612
10K/4
5 %
0402
COMMON
CKE_A
CKE_B
RST*
FBA_CMD14
FBA_CMD44
FBA_CMD3
FBA_CMD31
FBA_CMD17
FBA_CMD41
FBB_CMD14
FBB_CMD44
FBB_CMD3
FBB_CMD31
FBB_CMD17
FBB_CMD41

GA1XX GDDR6 CMD Mapping — x16 Mode

	Lower 0..31 DRAM1 CHA-Byte 0,1	Upper 32..63 DRAM2 CHA-Byte 4,5
CA0_A	CMD1	CMD33
CA1_A	CMD13	CMD45
CA2_A	CMD12	CMD35
CA3_A	CMD24	CMD46
CA4_A	CMD11	CMD36
CA5_A	CMD15	CMD43
CA6_A	CMD22	CMD48
CA7_A	CMD23	CMD47
CA8_A	CMD0	CMD34
CA9_A	CMD2	CMD32
CABI_A	CMD10	CMD37
CKE_A	CMD14	CMD44
	CHB-Byte 2,3	CHB-Byte 6,7
CA0_B	CMD5	CMD29
CA1_B	CMD18	CMD52
CA2_B	CMD7	CMD40
CA3_B	CMD20	CMD50
CA4_B	CMD8	CMD39
CA5_B	CMD16	CMD42
CA6_B	CMD21	CMD49
CA7_B	CMD19	CMD51
CA8_B	CMD6	CMD28
CA9_B	CMD4	CMD30
CABI_B	CMD9	CMD38
CKE_B	CMD17	CMD41
RESET*	CMD3	CMD31

ASSEMBLY
PAGE DETAIL

<ASSEMBLY_DESCRIPTION>
MEMORY: GPU Partition A/B

ALL NVIDIA DESIGN SPECIFICATIONS, REFERENCE SPECIFICATIONS, REFERENCE BOARDS, FILES, DRAWINGS, DIAGNOSTICS, LISTS AND OTHER DOCUMENTS OR INFORMATION (TOGETHER AND SEPARATELY, 'MATERIALS') ARE BEING PROVIDED 'AS IS'. THE MATERIALS MAY CONTAIN KNOWN AND UNKNOWN VIOLATIONS OR DEVIATIONS OF INDUSTRY STANDARDS AND SPECIFICATIONS. NVIDIA MAKES NO WARRANTIES, EXPRESSED, IMPLIED, STATUTORY OR OTHERWISE WITH RESPECT TO THE MATERIALS OR OTHERWISE, AND EXPRESSLY DISCLAIMS ALL IMPLIED WARRANTIES INCLUDING, WITHOUT LIMITATION, THE WARRANTIES OF DESIGN, OF NONINFRINGEMENT, MERCHANTABILITY OR FITNESS FOR A PARTICULAR PURPOSE, OR ARISING FROM A COURSE OF DEALING, TRADE USAGE, TRADE PRACTICE, OR INDUSTRY STANDARDS.

GIGABYTE
Title: PCIE
Size: Custom
Document Number: GV-N3060VISION OC-12GD
Rev: 1.01
Date: Thursday, January 14, 2021
Sheet 5 of 54

Page6: MEMORY: FBA Partition 31..0

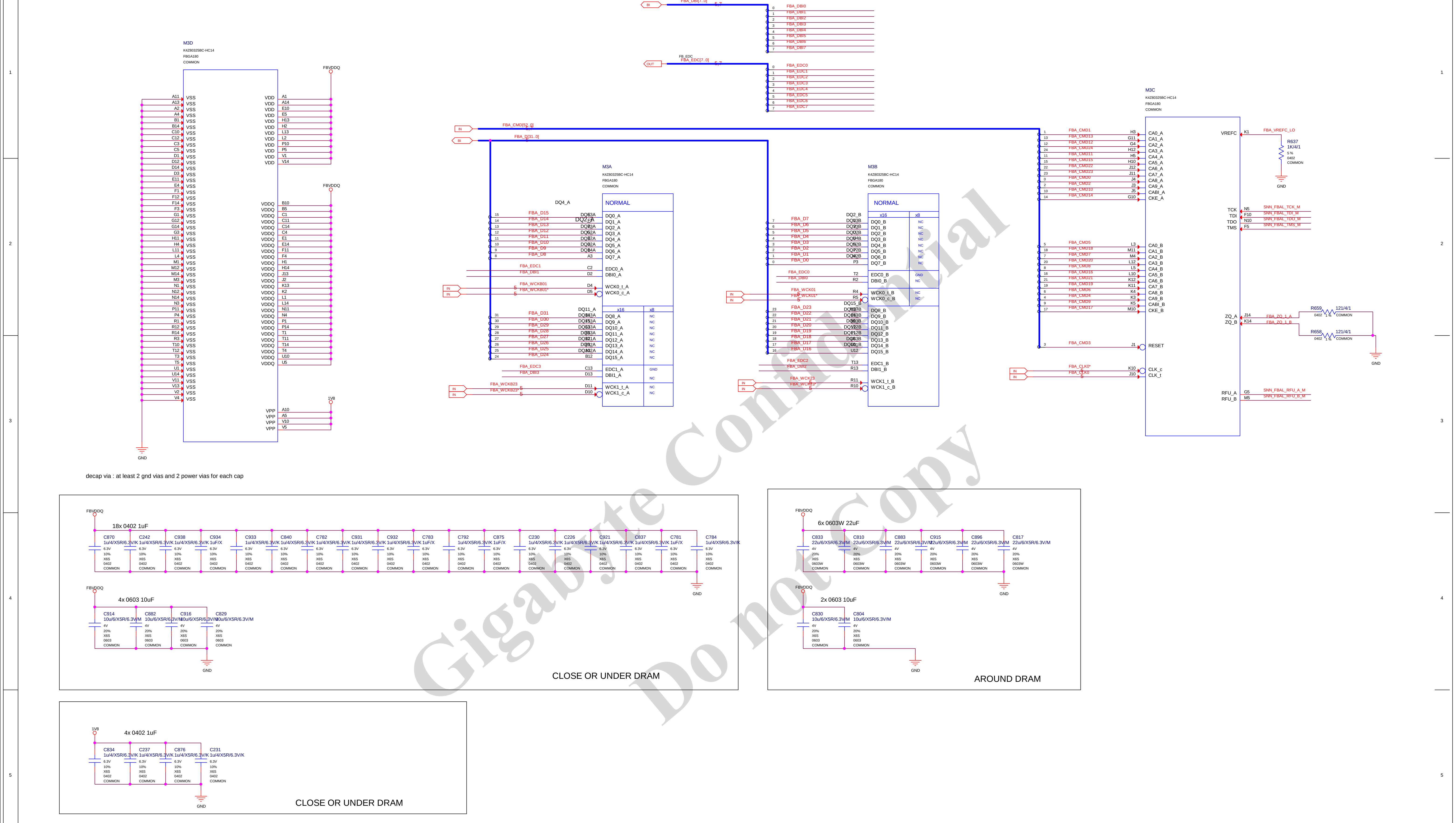
M3D
K4Z80325BC-HC14
FBGA180
COMMON
A11 A13 A2 A4 B1 B14 C10 C12 C3 C5 D1 D12 D14 D3 E11 E4 F1 F12 F14 F3 G1 G12 G14 G3 H11 H4 L11 L4 M1 M12 M14 M3 N1 N12 N14 N3 P11 P4 R1 R12 R14 R3 T10 T12 T3 T5 U1 U14 V11 V13 V2 V4
VSS
GND
FBVDDQ
VDD A1 A14 E10 E5 H13 H2 L13 L2 P10 P5 V1 V14
VDDQ B10 B5 C1 C11 C14 C4 E1 E14 F11 F4 H1 H14 J13 J2 K13 K2 L1 L14 N11 N4 P1 P14 T1 T11 T14 T4 U10 U5
1V8
VPP A10 A5 V10 V5
FB_DBI
BI
FBA_DBI[7..0]
5,7
0 FBA_DBI0
1 FBA_DBI1
2 FBA_DBI2
3 FBA_DBI3
4 FBA_DBI4
5 FBA_DBI5
6 FBA_DBI6
7 FBA_DBI7
FB_EDC
OUT
FBA_EDC[7..0]
5,7
0 FBA_EDC0
1 FBA_EDC1
2 FBA_EDC2
3 FBA_EDC3
4 FBA_EDC4
5 FBA_EDC5
6 FBA_EDC6
7 FBA_EDC7
IN
FBA_CMD[52..0]
5,7
BI
FBA_D[31..0]
5
M3A
K4Z80325BC-HC14
FBGA180
COMMON
NORMAL
DQ4_A
15 FBA_D15 DQ6_3A DQ0_A
14 FBA_D14 DQ2_A F2 DQ1_A
13 FBA_D13 DQ3_3A DQ2_A
12 FBA_D12 DQ5_2A DQ3_A
11 FBA_D11 DQ1_E2A DQ4_A
10 FBA_D10 DQ0_B2A DQ5_A
9 FBA_D9 DQ1_B4A DQ6_A
8 FBA_D8 A3 DQ7_A
FBA_EDC1 C2 EDC0_A
FBA_DBI1 D2 DBI0_A
IN FBA_WCKB01 5 D4 WCK0_t_A
IN FBA_WCKB01* 5 D5 WCK0_c_A
DQ11_A
x16 x8
31 FBA_D31 DQ8_B13A DQ8_A NC
30 FBA_D30 DQ15_E13A DQ9_A NC
29 FBA_D29 DQ13_G13A DQ10_A NC
28 FBA_D28 DQ9_B3A DQ11_A NC
27 FBA_D27 DQ12_E11A DQ12_A NC
26 FBA_D26 DQ9_G2A DQ13_A NC
25 FBA_D25 DQ10_G12A DQ14_A NC
24 FBA_D24 B12 DQ15_A NC
FBA_EDC3 C13 EDC1_A GND
FBA_DBI3 D13 DBI1_A NC
IN FBA_WCKB23 5 D11 WCK1_t_A NC
IN FBA_WCKB23* 5 D10 WCK1_c_A NC
M3B
K4Z80325BC-HC14
FBGA180
COMMON
NORMAL
x16 x8
DQ2_B
7 FBA_D7 DQ1_3B DQ0_B NC
6 FBA_D6 DQ3_3B DQ1_B NC
5 FBA_D5 DQ0_2B DQ2_B NC
4 FBA_D4 DQ6_4B DQ3_B NC
3 FBA_D3 DQ5_2B DQ4_B NC
2 FBA_D2 DQ7_2B DQ5_B NC
1 FBA_D1 DQ4_2B DQ6_B NC
0 FBA_D0 P3 DQ7_B NC
FBA_EDC0 T2 EDC0_B GND
FBA_DBI0 R2 DBI0_B NC
IN FBA_WCK01 5 R4 WCK0_t_B NC
IN FBA_WCK01* 5 R5 WCK0_c_B NC
DQ15_B
23 FBA_D23 DQ8_13B DQ8_B
22 FBA_D22 DQ14_13B DQ9_B
21 FBA_D21 DQ9_13B DQ10_B
20 FBA_D20 DQ12_12B DQ11_B
19 FBA_D19 DQ11_12B DQ12_B
18 FBA_D18 DQ8_3B DQ13_B
17 FBA_D17 DQ10_11B DQ14_B
16 FBA_D16 U12 DQ15_B
FBA_EDC2 T13 EDC1_B
FBA_DBI2 R13 DBI1_B
IN FBA_WCK23 5 R11 WCK1_t_B
IN FBA_WCK23* 5 R10 WCK1_c_B
M3C
K4Z80325BC-HC14
FBGA180
COMMON
1 FBA_CMD1 H3 CA0_A
13 FBA_CMD13 G11 CA1_A
12 FBA_CMD12 G4 CA2_A
24 FBA_CMD24 H12 CA3_A
11 FBA_CMD11 H5 CA4_A
15 FBA_CMD15 H10 CA5_A
22 FBA_CMD22 J12 CA6_A
23 FBA_CMD23 J11 CA7_A
0 FBA_CMD0 J4 CA8_A
2 FBA_CMD2 J3 CA9_A
10 FBA_CMD10 J5 CABI_A
14 FBA_CMD14 G10 CKE_A
5 FBA_CMD5 L3 CA0_B
18 FBA_CMD18 M11 CA1_B
7 FBA_CMD7 M4 CA2_B
20 FBA_CMD20 L12 CA3_B
8 FBA_CMD8 L5 CA4_B
16 FBA_CMD16 L10 CA5_B
21 FBA_CMD21 K12 CA6_B
19 FBA_CMD19 K11 CA7_B
6 FBA_CMD6 K4 CA8_B
4 FBA_CMD4 K3 CA9_B
9 FBA_CMD9 K5 CABI_B
17 FBA_CMD17 M10 CKE_B
3 FBA_CMD3 J1 RESET
IN FBA_CLK0* 5 K10 CLK_c
IN FBA_CLK0 5 J10 CLK_t
VREFC K1 FBA_VREFC_LO
R637 1K/4/1 5 % 0402 COMMON
GND
TCK N5 SNN_FBAL_TCK_M
TDI F10 SNN_FBAL_TDI_M
TDO N10 SNN_FBAL_TDO_M
TMS F5 SNN_FBAL_TMS_M
ZQ_A J14 FBA_ZQ_1_A
ZQ_B K14 FBA_ZQ_1_B
R659 121/4/1 0402 1 % COMMON
R658 121/4/1 0402 1 % COMMON
GND
RFU_A G5 SNN_FBAL_RFU_A_M
RFU_B M5 SNN_FBAL_RFU_B_M
FBVDDQ
18x 0402 1uF
C870 1u/4/X5R/6.3V/K
C242 1u/4/X5R/6.3V/K
C938 1u/4/X5R/6.3V/K
C934 1uF/X
C933 1u/4/X5R/6.3V/K
C840 1u/4/X5R/6.3V/K
C782 1u/4/X5R/6.3V/K
C931 1u/4/X5R/6.3V/K
C932 1u/4/X5R/6.3V/K
C783 1uF/X
C792 1u/4/X5R/6.3V/K
C875 1uF/X
C230 1u/4/X5R/6.3V/K
C226 1u/4/X5R/6.3V/K
C921 1u/4/X5R/6.3V/K
C837 1u/4/X5R/6.3V/K
C781 1uF/X
C784 1u/4/X5R/6.3V/K
6.3V 10% X6S 0402 COMMON
GND
FBVDDQ
4x 0603 10uF
C914 10u/6/X5R/6.3V/M
C882 10u/6/X5R/6.3V/M
C916 10u/6/X5R/6.3V/M
C829 10u/6/X5R/6.3V/M
4V 20% X6S 0603 COMMON
GND
CLOSE OR UNDER DRAM
FBVDDQ
6x 0603W 22uF
C833 22u/6/X5R/6.3V/M
C810 22u/6/X5R/6.3V/M
C883 22u/6/X5R/6.3V/M
C915 22u/6/X5R/6.3V/M
C896 22u/6/X5R/6.3V/M
C817 22u/6/X5R/6.3V/M
4V 20% X6S 0603W COMMON
GND
FBVDDQ
2x 0603 10uF
C830 10u/6/X5R/6.3V/M
C804 10u/6/X5R/6.3V/M
4V 20% X6S 0603 COMMON
GND
AROUND DRAM
1V8
4x 0402 1uF
C834 1u/4/X5R/6.3V/K
C237 1u/4/X5R/6.3V/K
C876 1u/4/X5R/6.3V/K
C231 1u/4/X5R/6.3V/K
6.3V 10% X6S 0402 COMMON
GND
CLOSE OR UNDER DRAM
1 2 3 4 5

decap via : at least 2 gnd vias and 2 power vias for each cap

ASSEMBLY	<ASSEMBLY_DESCRIPTION>
PAGE DETAIL	MEMORY: FBA Partation 32..0

ALL NVIDIA DESIGN SPECIFICATIONS, REFERENCE SPECIFICATIONS, REFERENCE BOARDS, FILES, DRAWINGS, DIAGNOSTICS, LISTS AND OTHER DOCUMENTS OR INFORMATION (TOGETHER AND SEPARATELY, 'MATERIALS') ARE BEING PROVIDED 'AS IS'. THE MATERIALS MAY CONTAIN KNOWN AND UNKNOWN VIOLATIONS OR DEVIATIONS OF INDUSTRY STANDARDS AND SPECIFICATIONS. NVIDIA MAKES NO WARRANTIES, EXPRESSED, IMPLIED, STATUTORY OR OTHERWISE WITH RESPECT TO THE MATERIALS OR OTHERWISE, AND EXPRESSLY DISCLAIMS ALL IMPLIED WARRANTIES INCLUDING, WITHOUT LIMITATION, THE WARRANTIES OF DESIGN, OF NONINFRINGEMENT, MERCHANTABILITY OR FITNESS FOR A PARTICULAR PURPOSE, OR ARISING FROM A COURSE OF DEALING, TRADE USAGE, TRADE PRACTICE, OR INDUSTRY STANDARDS.

GIGABYTE

Title
PCIE

Size: Custom
Document Number: GV-N3060VISION OC-12GD
Rev: 1.01

Date: Thursday, January 14, 2021
Sheet 6 of 54

Page7: MEMORY: FBA Partition 63..32

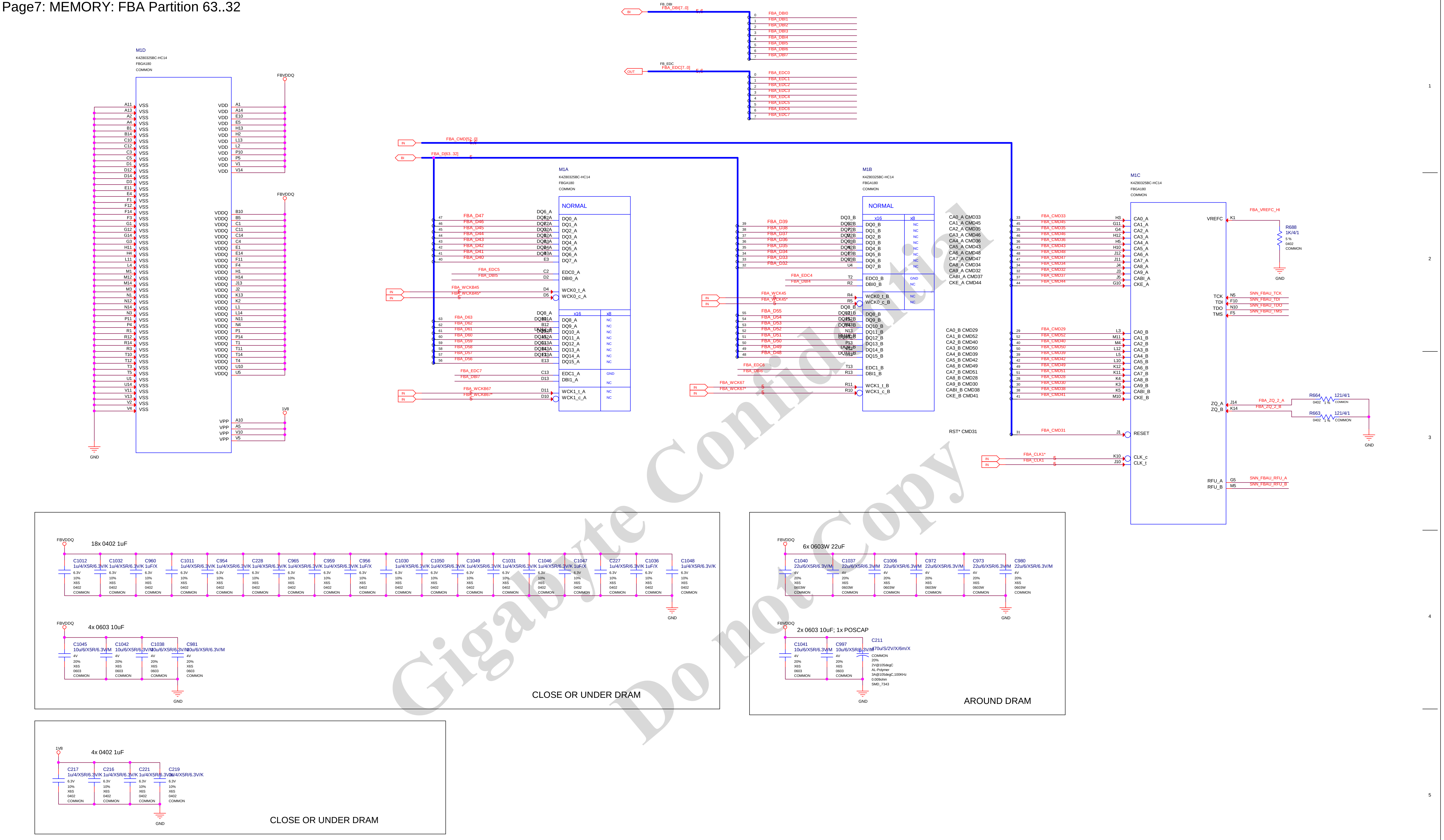
M1D
K4Z80325BC-HC14
FBGA180
COMMON
VSS (A11, A13, A2, A4, B1, B14, C10, C12, C3, C5, D1, D12, D14, D3, E11, E4, F1, F12, F14, F3, G1, G12, G14, G3, H11, H4, L11, L4, M1, M12, M14, M3, N1, N12, N14, N3, P11, P4, R1, R12, R14, R3, T10, T12, T3, T5, U1, U14, V11, V13, V2, V4)
GND
FBVDDQ
VDD (A1, A14, E10, E5, H13, H2, L13, L2, P10, P5, V1, V14)
VDDQ (B10, B5, C1, C11, C14, C4, E1, E14, F11, F4, H1, H14, J13, J2, K13, K2, L1, L14, N11, N4, P1, P14, T1, T11, T14, T4, U10, U5)
1V8
VPP (A10, A5, V10, V5)
BI FB_DBI FBA_DBI[7..0] 5,6
FBA_DBI0 … FBA_DBI7
OUT FB_EDC FBA_EDC[7..0] 5,6
FBA_EDC0 … FBA_EDC7
IN FBA_CMD[52..0] 5,6
BI FBA_D[63..32] 5
M1A
K4Z80325BC-HC14
FBGA180
COMMON
NORMAL
FBA_D47 … FBA_D40 — DQ0_A … DQ7_A
FBA_EDC5 C2 EDC0_A
FBA_DBI5 D2 DBI0_A
FBA_WCKB45 D4 WCK0_t_A
FBA_WCKB45* D5 WCK0_c_A
x16 x8
FBA_D63 … FBA_D56 — DQ8_A … DQ15_A NC
FBA_EDC7 C13 EDC1_A GND
FBA_DBI7 D13 DBI1_A NC
FBA_WCKB67 D11 WCK1_t_A NC
FBA_WCKB67* D10 WCK1_c_A NC
M1B
K4Z80325BC-HC14
FBGA180
COMMON
NORMAL
FBA_D39 … FBA_D32 — DQ0_B … DQ7_B NC
FBA_EDC4 T2 EDC0_B GND
FBA_DBI4 R2 DBI0_B NC
FBA_WCK45 R4 WCK0_t_B NC
FBA_WCK45* R5 WCK0_c_B NC
FBA_D55 … FBA_D48 — DQ8_B … DQ15_B
FBA_EDC6 T13 EDC1_B
FBA_DBI6 R13 DBI1_B
FBA_WCK67 R11 WCK1_t_B
FBA_WCK67* R10 WCK1_c_B
CA0_A CMD33
CA1_A CMD45
CA2_A CMD35
CA3_A CMD46
CA4_A CMD36
CA5_A CMD43
CA6_A CMD48
CA7_A CMD47
CA8_A CMD34
CA9_A CMD32
CABI_A CMD37
CKE_A CMD44
CA0_B CMD29
CA1_B CMD52
CA2_B CMD40
CA3_B CMD50
CA4_B CMD39
CA5_B CMD42
CA6_B CMD49
CA7_B CMD51
CA8_B CMD28
CA9_B CMD30
CABI_B CMD38
CKE_B CMD41
RST* CMD31
M1C
K4Z80325BC-HC14
FBGA180
COMMON
FBA_CMD33 H3 CA0_A
FBA_CMD45 G11 CA1_A
FBA_CMD35 G4 CA2_A
FBA_CMD46 H12 CA3_A
FBA_CMD36 H5 CA4_A
FBA_CMD43 H10 CA5_A
FBA_CMD48 J12 CA6_A
FBA_CMD47 J11 CA7_A
FBA_CMD34 J4 CA8_A
FBA_CMD32 J3 CA9_A
FBA_CMD37 J5 CABI_A
FBA_CMD44 G10 CKE_A
FBA_CMD29 L3 CA0_B
FBA_CMD52 M11 CA1_B
FBA_CMD40 M4 CA2_B
FBA_CMD50 L12 CA3_B
FBA_CMD39 L5 CA4_B
FBA_CMD42 L10 CA5_B
FBA_CMD49 K12 CA6_B
FBA_CMD51 K11 CA7_B
FBA_CMD28 K4 CA8_B
FBA_CMD30 K3 CA9_B
FBA_CMD38 K5 CABI_B
FBA_CMD41 M10 CKE_B
FBA_CMD31 J1 RESET
FBA_CLK1* K10 CLK_c
FBA_CLK1 J10 CLK_t
VREFC K1 FBA_VREFC_HI
R688 1K/4/1 5 % 0402 COMMON
TCK N5 SNN_FBAU_TCK
TDI F10 SNN_FBAU_TDI
TDO N10 SNN_FBAU_TDO
TMS F5 SNN_FBAU_TMS
ZQ_A J14 FBA_ZQ_2_A R664 121/4/1 0402 1 % COMMON
ZQ_B K14 FBA_ZQ_2_B R663 121/4/1 0402 1 % COMMON
RFU_A G5 SNN_FBAU_RFU_A
RFU_B M5 SNN_FBAU_RFU_B
18x 0402 1uF
C1012 C1032 C960 C1011 C954 C228 C965 C959 C956 C1030 C1050 C1049 C1031 C1046 C1047 C227 C1036 C1048
1u/4/X5R/6.3V/K 1uF/X 6.3V 10% X6S 0402 COMMON
4x 0603 10uF
C1045 C1042 C1038 C981 10u/6/X5R/6.3V/M 4V 20% X6S 0603 COMMON
CLOSE OR UNDER DRAM
6x 0603W 22uF
C1040 C1037 C1006 C972 C973 C980 22u/6/X5R/6.3V/M 4V 20% X6S 0603W COMMON
2x 0603 10uF; 1x POSCAP
C1041 C997 10u/6/X5R/6.3V/M 4V 20% X6S 0603 COMMON
C211 470u/S/2V/X/6m/X COMMON 20% 2V@105degC AL-Polymer 3A@105degC,100KHz 0.009ohm SMD_7343
AROUND DRAM
4x 0402 1uF
C217 C216 C221 C219 1u/4/X5R/6.3V/K 6.3V 10% X6S 0402 COMMON
CLOSE OR UNDER DRAM

Gigabyte Confidential Do not Copy

ASSEMBLY
PAGE DETAIL

<ASSEMBLY_DESCRIPTION>
MEMORY: FBA Partition 63..32

ALL NVIDIA DESIGN SPECIFICATIONS, REFERENCE SPECIFICATIONS, REFERENCE BOARDS, FILES, DRAWINGS, DIAGNOSTICS, LISTS AND OTHER DOCUMENTS OR INFORMATION (TOGETHER AND SEPARATELY, 'MATERIALS') ARE BEING PROVIDED 'AS IS'. THE MATERIALS MAY CONTAIN KNOWN AND UNKNOWN VIOLATIONS OR DEVIATIONS OF INDUSTRY STANDARDS AND SPECIFICATIONS. NVIDIA MAKES NO WARRANTIES, EXPRESSED, IMPLIED, STATUTORY OR OTHERWISE WITH RESPECT TO THE MATERIALS OR OTHERWISE, AND EXPRESSLY DISCLAIMS ALL IMPLIED WARRANTIES INCLUDING, WITHOUT LIMITATION, THE WARRANTIES OF DESIGN, OF NONINFRINGEMENT, MERCHANTABILITY OR FITNESS FOR A PARTICULAR PURPOSE, OR ARISING FROM A COURSE OF DEALING, TRADE USAGE, TRADE PRACTICE, OR INDUSTRY STANDARDS.

GIGABYTE

Title
PCIE

Size: Custom
Document Number: GV-N3060VISION OC-12GD
Rev: 1.01

Date: Thursday, January 14, 2021

Page8: MEMORY: FBB Partition 31..0

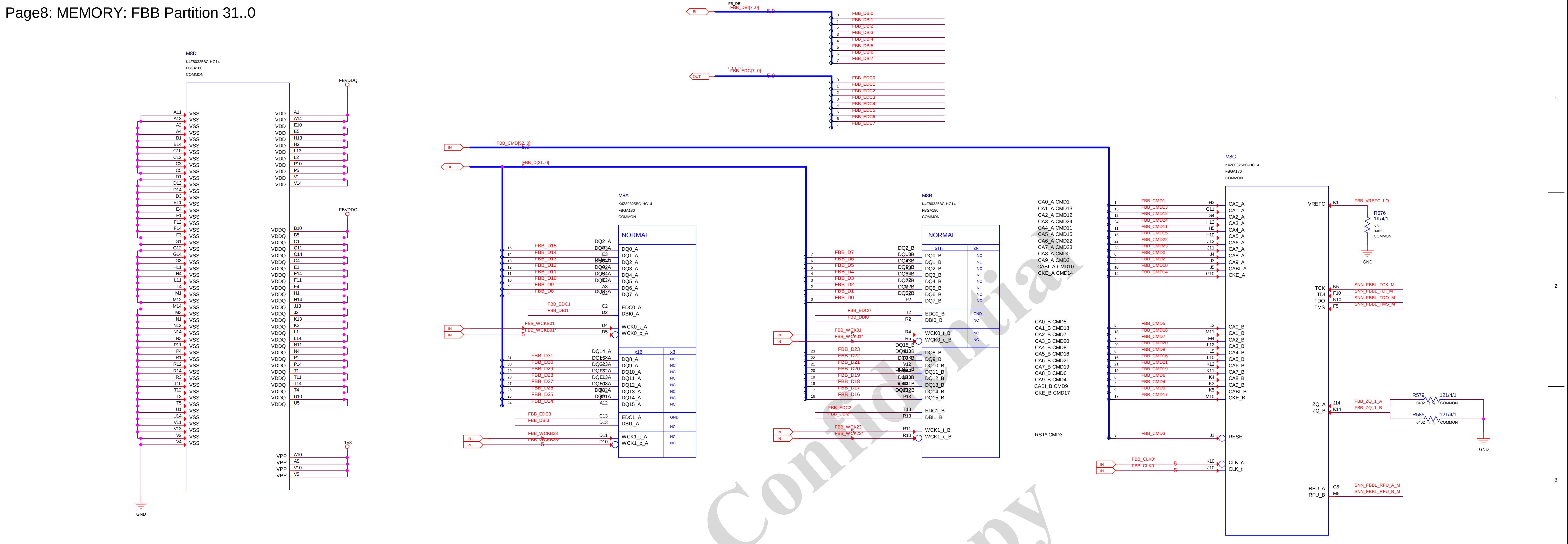
M8D
K4Z80325BC-HC14
FBGA180
COMMON
VSS: A11 A13 A2 A4 B1 B14 C10 C12 C3 C5 D1 D12 D14 D3 E11 E4 F1 F12 F14 F3 G1 G12 G14 G3 H11 H4 L11 L4 M1 M12 M14 M3 N1 N12 N14 N3 P11 P4 R1 R12 R14 R3 T10 T12 T3 T5 U1 U14 V11 V13 V2 V4
GND
FBVDDQ
VDD: A1 A14 E10 E5 H13 H2 L13 L2 P10 P5 V1 V14
FBVDDQ
VDDQ: B10 B5 C1 C11 C14 C4 E1 E14 F11 F4 H1 H14 J13 J2 K13 K2 L1 L14 N11 N4 P1 P14 T1 T11 T14 T4 U10 U5
1V8
VPP: A10 A5 V10 V5
BI FB_DBI FBB_DBI[7..0] 5,0
FBB_DBI0 FBB_DBI1 FBB_DBI2 FBB_DBI3 FBB_DBI4 FBB_DBI5 FBB_DBI6 FBB_DBI7
OUT FB_EDC FBB_EDC[7..0] 5,0
FBB_EDC0 FBB_EDC1 FBB_EDC2 FBB_EDC3 FBB_EDC4 FBB_EDC5 FBB_EDC6 FBB_EDC7
IN FBB_CMD[52..0] 5,0
BI FBB_D[31..0] 5
M8A
K4Z80325BC-HC14
FBGA180
COMMON
NORMAL
FBB_D15 … FBB_D8 → DQ0_A … DQ7_A
FBB_EDC1 C2 EDC0_A
FBB_DBI1 D2 DBI0_A
IN FBB_WCKB01 D4 WCK0_t_A
IN FBB_WCKB01* D5 WCK0_c_A
x16 x8
FBB_D31 … FBB_D24 → DQ8_A … DQ15_A
NC
FBB_EDC3 C13 EDC1_A GND
FBB_DBI3 D13 DBI1_A NC
IN FBB_WCKB23 D11 WCK1_t_A NC
IN FBB_WCKB23* D10 WCK1_c_A NC
M8B
K4Z80325BC-HC14
FBGA180
COMMON
NORMAL
x16 x8
FBB_D7 … FBB_D0 → DQ0_B … DQ7_B
FBB_EDC0 T2 EDC0_B GND
FBB_DBI0 R2 DBI0_B NC
IN FBB_WCK01 R4 WCK0_t_B NC
IN FBB_WCK01* R5 WCK0_c_B NC
FBB_D23 … FBB_D16 → DQ8_B … DQ15_B
FBB_EDC2 T13 EDC1_B
FBB_DBI2 R13 DBI1_B
IN FBB_WCK23 R11 WCK1_t_B
IN FBB_WCK23* R10 WCK1_c_B
CA0_A CMD1
CA1_A CMD13
CA2_A CMD12
CA3_A CMD24
CA4_A CMD11
CA5_A CMD15
CA6_A CMD22
CA7_A CMD23
CA8_A CMD0
CA9_A CMD2
CABI_A CMD10
CKE_A CMD14
CA0_B CMD5
CA1_B CMD18
CA2_B CMD7
CA3_B CMD20
CA4_B CMD8
CA5_B CMD16
CA6_B CMD21
CA7_B CMD19
CA8_B CMD6
CA9_B CMD4
CABI_B CMD9
CKE_B CMD17
RST* CMD3
M8C
K4Z80325BC-HC14
FBGA180
COMMON
FBB_CMD1 H3 CA0_A
FBB_CMD13 G11 CA1_A
FBB_CMD12 G4 CA2_A
FBB_CMD24 H12 CA3_A
FBB_CMD11 H5 CA4_A
FBB_CMD15 H10 CA5_A
FBB_CMD22 J12 CA6_A
FBB_CMD23 J11 CA7_A
FBB_CMD0 J4 CA8_A
FBB_CMD2 J3 CA9_A
FBB_CMD10 J5 CABI_A
FBB_CMD14 G10 CKE_A
FBB_CMD5 L3 CA0_B
FBB_CMD18 M11 CA1_B
FBB_CMD7 M4 CA2_B
FBB_CMD20 L12 CA3_B
FBB_CMD8 L5 CA4_B
FBB_CMD16 L10 CA5_B
FBB_CMD21 K12 CA6_B
FBB_CMD19 K11 CA7_B
FBB_CMD6 K4 CA8_B
FBB_CMD4 K3 CA9_B
FBB_CMD9 K5 CABI_B
FBB_CMD17 M10 CKE_B
FBB_CMD3 J1 RESET
IN FBB_CLK0* K10 CLK_c
IN FBB_CLK0 J10 CLK_t
VREFC K1 FBB_VREFC_LO
R576 1K/4/1 5 % 0402 COMMON
GND
TCK N5 SNN_FBBL_TCK_M
TDI F10 SNN_FBBL_TDI_M
TDO N10 SNN_FBBL_TDO_M
TMS F5 SNN_FBBL_TMS_M
ZQ_A J14 FBB_ZQ_1_A
ZQ_B K14 FBB_ZQ_1_B
R579 121/4/1 0402 1 % COMMON
R585 121/4/1 0402 1 % COMMON
GND
RFU_A G5 SNN_FBBL_RFU_A_M
RFU_B M5 SNN_FBBL_RFU_B_M

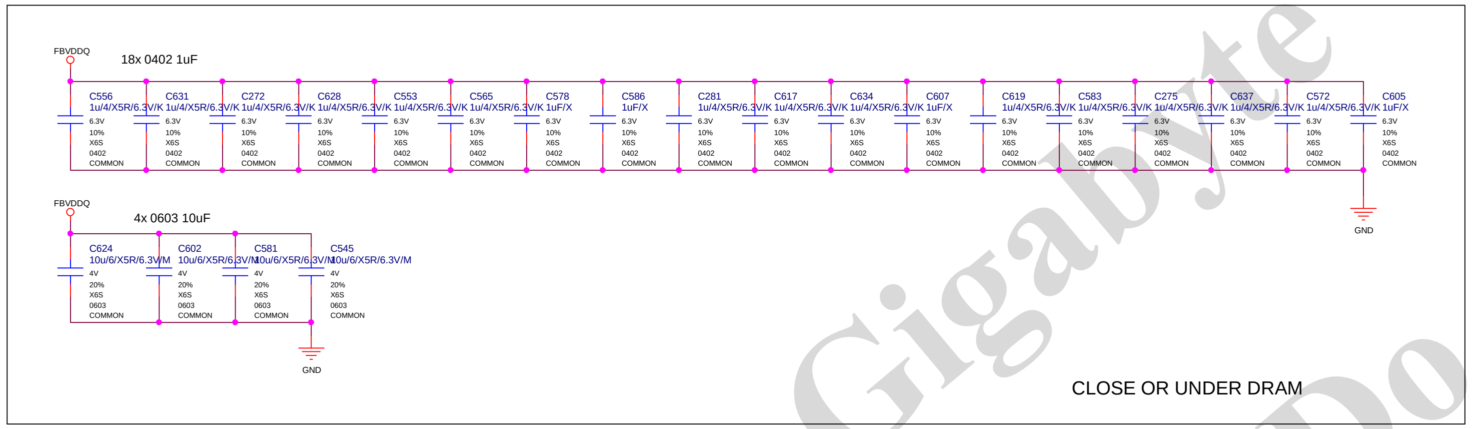
FBVDDQ
18x 0402 1uF
C556 1u/4/X5R/6.3V/K
C631 1u/4/X5R/6.3V/K
C272 1u/4/X5R/6.3V/K
C628 1u/4/X5R/6.3V/K
C553 1u/4/X5R/6.3V/K
C565 1u/4/X5R/6.3V/K
C578 1uF/X
C586 1uF/X
C281 1u/4/X5R/6.3V/K
C617 1u/4/X5R/6.3V/K
C634 1u/4/X5R/6.3V/K
C607 1uF/X
C619 1u/4/X5R/6.3V/K
C583 1u/4/X5R/6.3V/K
C275 1u/4/X5R/6.3V/K
C637 1u/4/X5R/6.3V/K
C572 1u/4/X5R/6.3V/K
C605 1uF/X
6.3V 10% X6S 0402 COMMON
GND
FBVDDQ
4x 0603 10uF
C624 10u/6/X5R/6.3V/M
C602 10u/6/X5R/6.3V/M
C581 10u/6/X5R/6.3V/M
C545 10u/6/X5R/6.3V/M
4V 20% X6S 0603 COMMON
GND
CLOSE OR UNDER DRAM

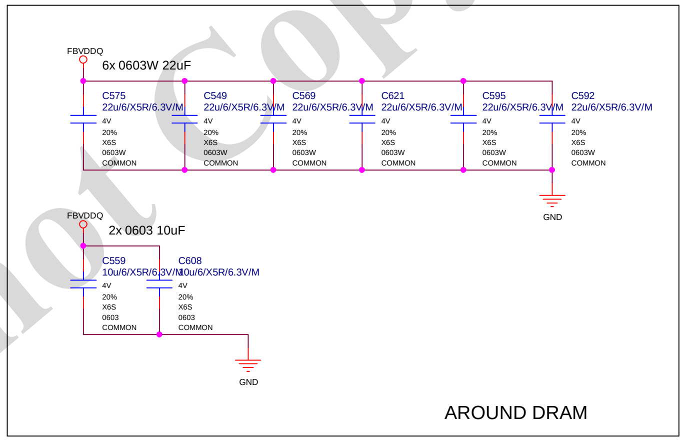
FBVDDQ
6x 0603W 22uF
C575 22u/6/X5R/6.3V/M
C549 22u/6/X5R/6.3V/M
C569 22u/6/X5R/6.3V/M
C621 22u/6/X5R/6.3V/M
C595 22u/6/X5R/6.3V/M
C592 22u/6/X5R/6.3V/M
4V 20% X6S 0603W COMMON
GND
FBVDDQ
2x 0603 10uF
C559 10u/6/X5R/6.3V/M
C608 10u/6/X5R/6.3V/M
4V 20% X6S 0603 COMMON
GND
AROUND DRAM

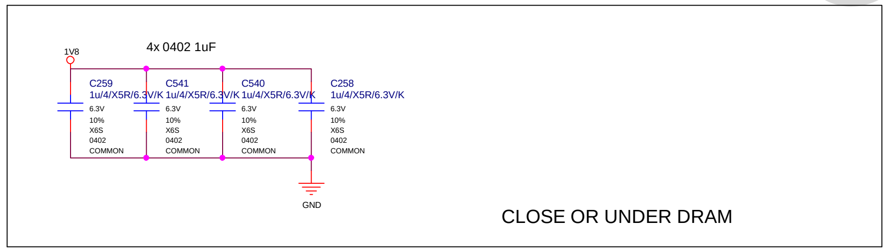
1V8
4x 0402 1uF
C259 1u/4/X5R/6.3V/K
C541 1u/4/X5R/6.3V/K
C540 1u/4/X5R/6.3V/K
C258 1u/4/X5R/6.3V/K
6.3V 10% X6S 0402 COMMON
GND
CLOSE OR UNDER DRAM

ASSEMBLY <ASSEMBLY_DESCRIPTION>
PAGE DETAIL MEMORY: FBB Partition 31..0

ALL NVIDIA DESIGN SPECIFICATIONS, REFERENCE SPECIFICATIONS, REFERENCE BOARDS, FILES, DRAWINGS, DIAGNOSTICS, LISTS AND OTHER DOCUMENTS OR INFORMATION (TOGETHER AND SEPARATELY, 'MATERIALS') ARE BEING PROVIDED 'AS IS'. THE MATERIALS MAY CONTAIN KNOWN AND UNKNOWN VIOLATIONS OR DEVIATIONS OF INDUSTRY STANDARDS AND SPECIFICATIONS. NVIDIA MAKES NO WARRANTIES, EXPRESSED, IMPLIED, STATUTORY OR OTHERWISE WITH RESPECT TO THE MATERIALS OR OTHERWISE, AND EXPRESSLY DISCLAIMS ALL IMPLIED WARRANTIES INCLUDING, WITHOUT LIMITATION, THE WARRANTIES OF DESIGN, OF NONINFRINGEMENT, MERCHANTABILITY OR FITNESS FOR A PARTICULAR PURPOSE, OR ARISING FROM A COURSE OF DEALING, TRADE USAGE, TRADE PRACTICE, OR INDUSTRY STANDARDS.

GIGABYTE
Title PCIE
Size Custom
Document Number GV-N3060VISION OC-12GD
Rev 1.01
Date: Thursday, January 14, 2021

Page9: MEMORY: FBB Partition 63..32

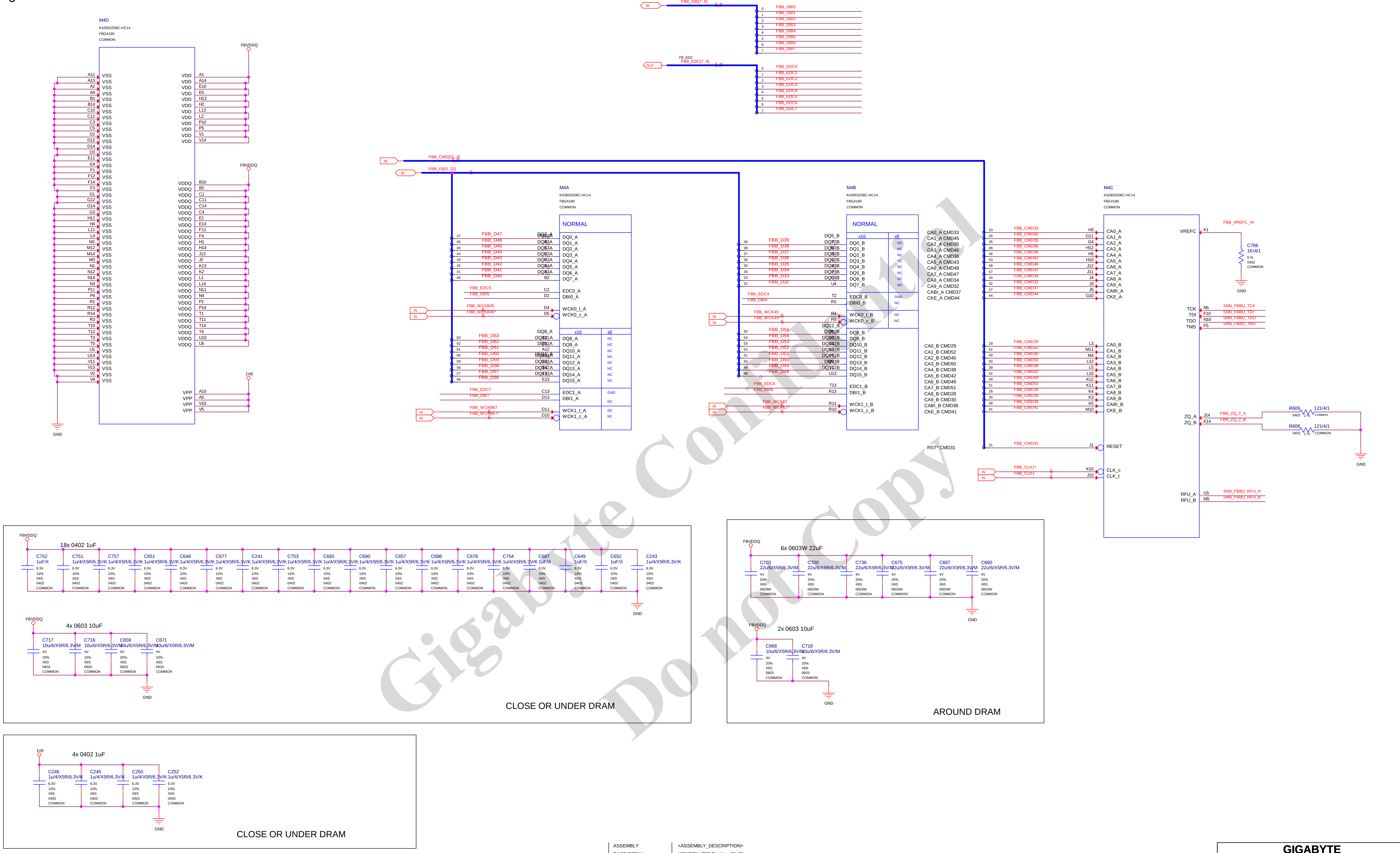
M4D
K4Z80325BC-HC14
FBGA180
COMMON
VSS A11 A13 A2 A4 B1 B14 C10 C12 C3 C5 D1 D12 D14 D3 E11 E4 F1 F12 F14 F3 G1 G12 G14 G3 H11 H4 L11 L4 M1 M12 M14 M3 N1 N12 N14 N3 P11 P4 R1 R12 R14 R3 T10 T12 T3 T5 U1 U14 V11 V13 V2 V4
GND
FBVDDQ
VDD A1 A14 E10 E5 H13 H2 L13 L2 P10 P5 V1 V14
VDDQ B10 B5 C1 C11 C14 C4 E1 E14 F11 F4 H1 H14 J13 J2 K13 K2 L1 L14 N11 N4 P1 P14 T1 T11 T14 T4 U10 U5
1V8
VPP A10 A5 V10 V5
BI FB_DBI FBB_DBI[7..0] 5,8
FBB_DBI0 FBB_DBI1 FBB_DBI2 FBB_DBI3 FBB_DBI4 FBB_DBI5 FBB_DBI6 FBB_DBI7
OUT FB_EDC FBB_EDC[7..0] 5,8
FBB_EDC0 FBB_EDC1 FBB_EDC2 FBB_EDC3 FBB_EDC4 FBB_EDC5 FBB_EDC6 FBB_EDC7
IN FBB_CMD[52..0] 5,8
BI FBB_D[63..32] 5
M4A
K4Z80325BC-HC14
FBGA180
COMMON
NORMAL
FBB_D47 FBB_D46 FBB_D45 FBB_D44 FBB_D43 FBB_D42 FBB_D41 FBB_D40
DQ0_A DQ1_A DQ2_A DQ3_A DQ4_A DQ5_A DQ6_A DQ7_A
FBB_EDC5 C2 EDC0_A
FBB_DBI5 D2 DBI0_A
IN FBB_WCKB45 D4 WCK0_t_A
IN FBB_WCKB45* D5 WCK0_c_A
x16 x8
FBB_D63 FBB_D62 FBB_D61 FBB_D60 FBB_D59 FBB_D58 FBB_D57 FBB_D56
DQ8_A DQ9_A DQ10_A DQ11_A DQ12_A DQ13_A DQ14_A DQ15_A
NC
FBB_EDC7 C13 EDC1_A GND
FBB_DBI7 D13 DBI1_A
IN FBB_WCKB67 D11 WCK1_t_A
IN FBB_WCKB67* D10 WCK1_c_A
M4B
K4Z80325BC-HC14
FBGA180
COMMON
NORMAL
FBB_D39 FBB_D38 FBB_D37 FBB_D36 FBB_D35 FBB_D34 FBB_D33 FBB_D32
DQ0_B DQ1_B DQ2_B DQ3_B DQ4_B DQ5_B DQ6_B DQ7_B
FBB_EDC4 T2 EDC0_B
FBB_DBI4 R2 DBI0_B
IN FBB_WCK45 R4 WCK0_t_B
IN FBB_WCK45* R5 WCK0_c_B
FBB_D55 FBB_D54 FBB_D53 FBB_D52 FBB_D51 FBB_D50 FBB_D49 FBB_D48
DQ8_B DQ9_B DQ10_B DQ11_B DQ12_B DQ13_B DQ14_B DQ15_B
FBB_EDC6 T13 EDC1_B
FBB_DBI6 R13 DBI1_B
IN FBB_WCK67 R11 WCK1_t_B
IN FBB_WCK67* R10 WCK1_c_B
CA0_A CMD33
CA1_A CMD45
CA2_A CMD35
CA3_A CMD46
CA4_A CMD36
CA5_A CMD43
CA6_A CMD48
CA7_A CMD47
CA8_A CMD34
CA9_A CMD32
CABI_A CMD37
CKE_A CMD44
CA0_B CMD29
CA1_B CMD52
CA2_B CMD40
CA3_B CMD50
CA4_B CMD39
CA5_B CMD42
CA6_B CMD49
CA7_B CMD51
CA8_B CMD28
CA9_B CMD30
CABI_B CMD38
CKE_B CMD41
RST* CMD31
M4C
K4Z80325BC-HC14
FBGA180
COMMON
FBB_CMD33 H3 CA0_A
FBB_CMD45 G11 CA1_A
FBB_CMD35 G4 CA2_A
FBB_CMD46 H12 CA3_A
FBB_CMD36 H5 CA4_A
FBB_CMD43 H10 CA5_A
FBB_CMD48 J12 CA6_A
FBB_CMD47 J11 CA7_A
FBB_CMD34 J4 CA8_A
FBB_CMD32 J3 CA9_A
FBB_CMD37 J5 CABI_A
FBB_CMD44 G10 CKE_A
FBB_CMD29 L3 CA0_B
FBB_CMD52 M11 CA1_B
FBB_CMD40 M4 CA2_B
FBB_CMD50 L12 CA3_B
FBB_CMD39 L5 CA4_B
FBB_CMD42 L10 CA5_B
FBB_CMD49 K12 CA6_B
FBB_CMD51 K11 CA7_B
FBB_CMD28 K4 CA8_B
FBB_CMD30 K3 CA9_B
FBB_CMD38 K5 CABI_B
FBB_CMD41 M10 CKE_B
FBB_CMD31 J1 RESET
IN FBB_CLK1* 5 K10 CLK_c
IN FBB_CLK1 5 J10 CLK_t
FBB_VREFC_HI
VREFC K1
C766
1K/4/1
5 %
0402
COMMON
GND
TCK N5 SNN_FBBU_TCK
TDI F10 SNN_FBBU_TDI
TDO N10 SNN_FBBU_TDO
TMS F5 SNN_FBBU_TMS
ZQ_A J14 FBB_ZQ_2_A
ZQ_B K14 FBB_ZQ_2_B
R609 121/4/1 0402 1 % COMMON
R608 121/4/1 0402 1 % COMMON
GND
RFU_A G5 SNN_FBBU_RFU_A
RFU_B M5 SNN_FBBU_RFU_B
FBVDDQ
18x 0402 1uF
C752 1uF/X
C751 1u/4/X5R/6.3V/K
C757 1u/4/X5R/6.3V/K
C651 1u/4/X5R/6.3V/K
C648 1u/4/X5R/6.3V/K
C677 1u/4/X5R/6.3V/K
C241 1u/4/X5R/6.3V/K
C753 1u/4/X5R/6.3V/K
C682 1u/4/X5R/6.3V/K
C690 1u/4/X5R/6.3V/K
C657 1u/4/X5R/6.3V/K
C686 1u/4/X5R/6.3V/K
C678 1u/4/X5R/6.3V/K
C754 1u/4/X5R/6.3V/K
C687 1uF/X
C649 1uF/X
C652 1uF/X
C243 1u/4/X5R/6.3V/K
6.3V 10% X6S 0402 COMMON
GND
FBVDDQ
4x 0603 10uF
C717 10u/6/X5R/6.3V/M
C716 10u/6/X5R/6.3V/M
C659 10u/6/X5R/6.3V/M
C671 10u/6/X5R/6.3V/M
4V 20% X6S 0603 COMMON
GND
CLOSE OR UNDER DRAM
FBVDDQ
6x 0603W 22uF
C703 22u/6/X5R/6.3V/M
C700 22u/6/X5R/6.3V/M
C736 22u/6/X5R/6.3V/M
C675 22u/6/X5R/6.3V/M
C667 22u/6/X5R/6.3V/M
C660 22u/6/X5R/6.3V/M
4V 20% X6S 0603W COMMON
GND
FBVDDQ
2x 0603 10uF
C668 10u/6/X5R/6.3V/M
C718 10u/6/X5R/6.3V/M
4V 20% X6S 0603 COMMON
GND
AROUND DRAM
1V8
4x 0402 1uF
C246 1u/4/X5R/6.3V/K
C245 1u/4/X5R/6.3V/K
C250 1u/4/X5R/6.3V/K
C252 1u/4/X5R/6.3V/K
6.3V 10% X6S 0402 COMMON
GND
CLOSE OR UNDER DRAM

ASSEMBLY <ASSEMBLY_DESCRIPTION>
PAGE DETAIL MEMORY: FBB Partition 63..32

ALL NVIDIA DESIGN SPECIFICATIONS, REFERENCE SPECIFICATIONS, REFERENCE BOARDS, FILES, DRAWINGS, DIAGNOSTICS, LISTS AND OTHER DOCUMENTS OR INFORMATION (TOGETHER AND SEPARATELY, 'MATERIALS') ARE BEING PROVIDED 'AS IS'. THE MATERIALS MAY CONTAIN KNOWN AND UNKNOWN VIOLATIONS OR DEVIATIONS OF INDUSTRY STANDARDS AND SPECIFICATIONS. NVIDIA MAKES NO WARRANTIES, EXPRESSED, IMPLIED, STATUTORY OR OTHERWISE WITH RESPECT TO THE MATERIALS OR OTHERWISE, AND EXPRESSLY DISCLAIMS ALL IMPLIED WARRANTIES INCLUDING, WITHOUT LIMITATION, THE WARRANTIES OF DESIGN, OF NONINFRINGEMENT, MERCHANTABILITY OR FITNESS FOR A PARTICULAR PURPOSE, OR ARISING FROM A COURSE OF DEALING, TRADE USAGE, TRADE PRACTICE, OR INDUSTRY STANDARDS.

GIGABYTE

Title
PCIE

Size Custom
Document Number GV-N3060VISION OC-12GD
Rev 1.01

Date: Thursday, January 14, 2021

Page10: MEMORY: GPU Partition C/D

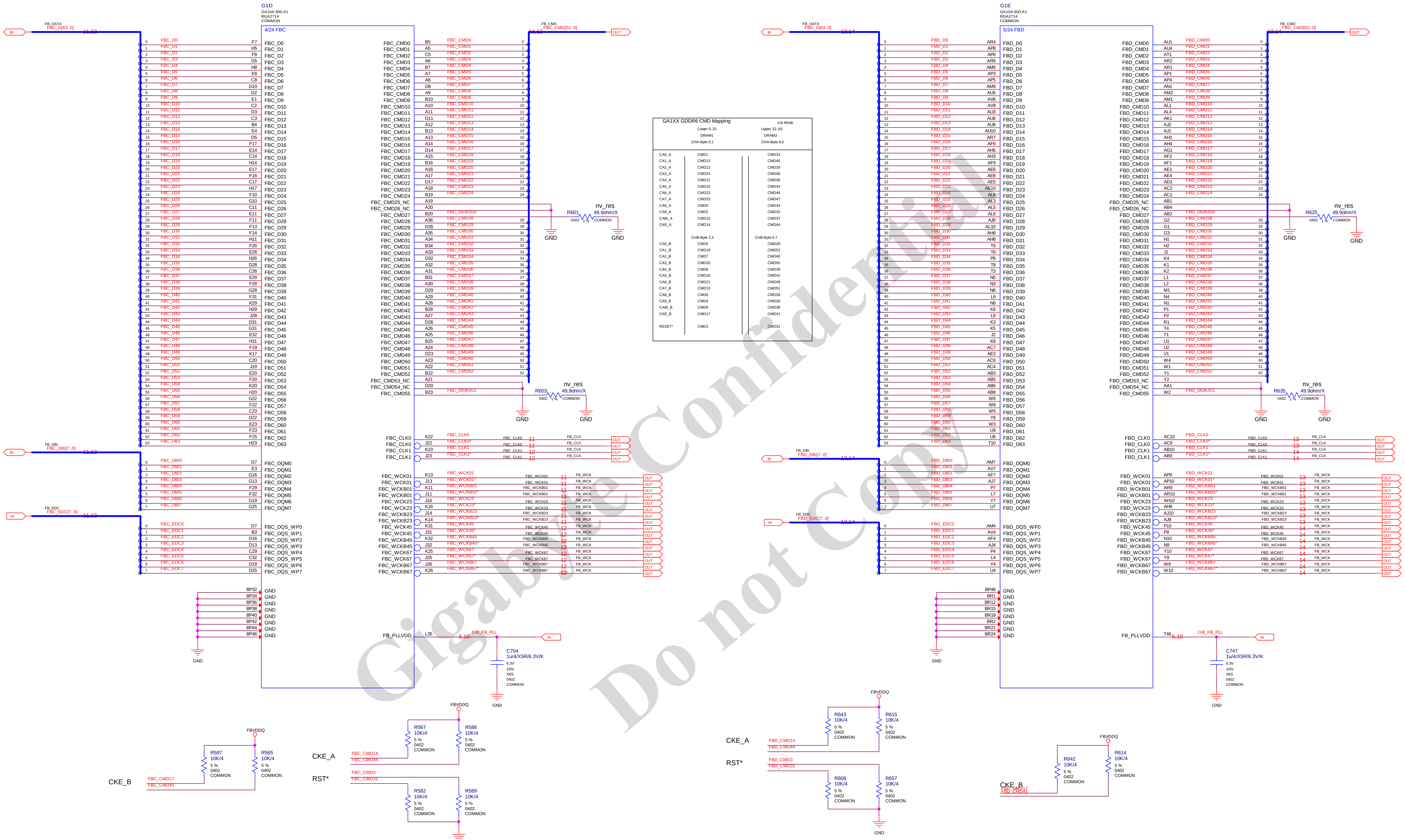
G1D
GA104-300-A1
BGA2714
COMMON
4/24 FBC
FB_DATA
FBC_D[63..0]
11,12
BI
FBC_D0 … FBC_D63
FBC_CMD0 … FBC_CMD55
FBC_CMD25_NC
FBC_CMD26_NC
FBC_CMD53_NC
FBC_CMD54_NC
FB_CMD
FBC_CMD[52..0]
OUT
FBC_DEBUG0
FBC_DEBUG1
R601
nv_res
49.9ohm/X
0402
1 %
COMMON
R603
nv_res
49.9ohm/X
GND
FBC_CLK0
FBC_CLK0*
FBC_CLK1
FBC_CLK1*
FB_CLK
FB_DBI
FBC_DBI[7..0]
FBC_DQM0 … FBC_DQM7
FB_EDC
FBC_EDC[7..0]
IN
FBC_DQS_WP0 … FBC_DQS_WP7
FBC_WCK01
FBC_WCKB01
FBC_WCK23
FBC_WCKB23
FBC_WCK45
FBC_WCKB45
FBC_WCK67
FBC_WCKB67
FB_WCK
FB_PLLVDD
L35
1V8_FB_PLL
5,10
C704
1u/4/X5R/6.3V/K
6.3V
10%
X6S
0402
COMMON
FBVDDQ
R587
R565
R567
R586
R582
R589
10K/4
5 %
0402
COMMON
CKE_B
FBC_CMD17
FBC_CMD41
CKE_A
FBC_CMD14
FBC_CMD44
RST*
FBC_CMD3
FBC_CMD31
G1E
GA104-300-A1
BGA2714
COMMON
5/24 FBD
FBD_D[63..0]
13,14
FBD_D0 … FBD_D63
FBD_CMD0 … FBD_CMD55
FBD_CMD[52..0]
FBD_DEBUG0
FBD_DEBUG1
R625
R635
FBD_CLK0
FBD_CLK0*
FBD_CLK1
FBD_CLK1*
FBD_DBI[7..0]
FBD_DQM0 … FBD_DQM7
FBD_EDC[7..0]
FBD_DQS_WP0 … FBD_DQS_WP7
FBD_WCK01
FBD_WCKB01
FBD_WCK23
FBD_WCKB23
FBD_WCK45
FBD_WCKB45
FBD_WCK67
FBD_WCKB67
T46
C747
1u/4/X5R/6.3V/K
R643
R615
R606
R657
R642
R614
FBD_CMD14
FBD_CMD44
FBD_CMD3
FBD_CMD31
FBD_CMD17
FBD_CMD41

GA1XX GDDR6 CMD Mapping	Lower 0..31 DRAM1 CHA-Byte 0,1	x16 Mode Upper 32..63 DRAM2 CHA-Byte 4,5
CA0_A	CMD1	CMD33
CA1_A	CMD13	CMD45
CA2_A	CMD12	CMD35
CA3_A	CMD24	CMD46
CA4_A	CMD11	CMD36
CA5_A	CMD15	CMD43
CA6_A	CMD22	CMD48
CA7_A	CMD23	CMD47
CA8_A	CMD0	CMD34
CA9_A	CMD2	CMD32
CABI_A	CMD10	CMD37
CKE_A	CMD14	CMD44
	CHB-Byte 2,3	CHB-Byte 6,7
CA0_B	CMD5	CMD29
CA1_B	CMD18	CMD52
CA2_B	CMD7	CMD40
CA3_B	CMD20	CMD50
CA4_B	CMD8	CMD39
CA5_B	CMD16	CMD42
CA6_B	CMD21	CMD49
CA7_B	CMD19	CMD51
CA8_B	CMD6	CMD28
CA9_B	CMD4	CMD30
CABI_B	CMD9	CMD38
CKE_B	CMD17	CMD41
RESET*	CMD3	CMD31

ASSEMBLY
PAGE DETAIL

<ASSEMBLY_DESCRIPTION>
MEMORY: GPU Partition C/D

ALL NVIDIA DESIGN SPECIFICATIONS, REFERENCE SPECIFICATIONS, REFERENCE BOARDS, FILES, DRAWINGS, DIAGNOSTICS, LISTS AND OTHER DOCUMENTS OR INFORMATION (TOGETHER AND SEPARATELY, 'MATERIALS') ARE BEING PROVIDED 'AS IS'. THE MATERIALS MAY CONTAIN KNOWN AND UNKNOWN VIOLATIONS OR DEVIATIONS OF INDUSTRY STANDARDS AND SPECIFICATIONS. NVIDIA MAKES NO WARRANTIES, EXPRESSED, IMPLIED, STATUTORY OR OTHERWISE WITH RESPECT TO THE MATERIALS OR OTHERWISE, AND EXPRESSLY DISCLAIMS ALL IMPLIED WARRANTIES INCLUDING, WITHOUT LIMITATION, THE WARRANTIES OF DESIGN, OF NONINFRINGEMENT, MERCHANTABILITY OR FITNESS FOR A PARTICULAR PURPOSE, OR ARISING FROM A COURSE OF DEALING, TRADE USAGE, TRADE PRACTICE, OR INDUSTRY STANDARDS.

GIGABYTE

Title
PCIE

Size: Custom
Document Number: GV-N3060VISION OC-12GD
Rev: 1.01

Date: Thursday, January 14, 2021

Page11: MEMORY: FBC Partition 31..0

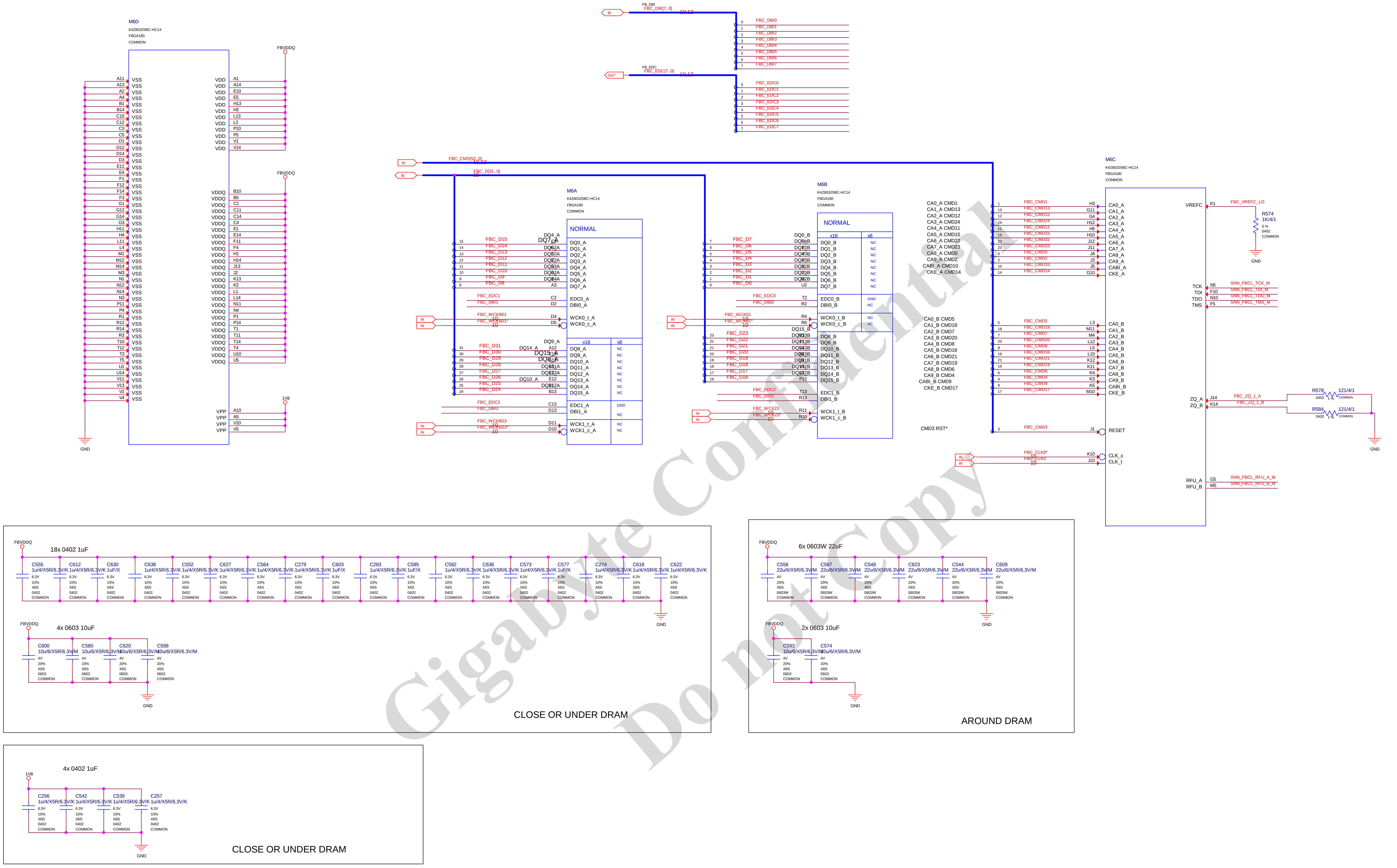
M6D
K4Z80325BC-HC14
FBGA180
COMMON
VSS
A11 A13 A2 A4 B1 B14 C10 C12 C3 C5 D1 D12 D14 D3 E11 E4 F1 F12 F14 F3 G1 G12 G14 G3 H11 H4 L11 L4 M1 M12 M14 M3 N1 N12 N14 N3 P11 P4 R1 R12 R14 R3 T10 T12 T3 T5 U1 U14 V11 V13 V2 V4
GND
FBVDDQ
VDD
A1 A14 E10 E5 H13 H2 L13 L2 P10 P5 V1 V14
VDDQ
B10 B5 C1 C11 C14 C4 E1 E14 F11 F4 H1 H14 J13 J2 K13 K2 L1 L14 N11 N4 P1 P14 T1 T11 T14 T4 U10 U5
1V8
VPP
A10 A5 V10 V5
FB_DBI
FBC_DBI[7..0]
10,12
BI
FBC_DBI0 FBC_DBI1 FBC_DBI2 FBC_DBI3 FBC_DBI4 FBC_DBI5 FBC_DBI6 FBC_DBI7
FB_EDC
FBC_EDC[7..0]
OUT
FBC_EDC0 FBC_EDC1 FBC_EDC2 FBC_EDC3 FBC_EDC4 FBC_EDC5 FBC_EDC6 FBC_EDC7
IN
FBC_CMD[52..0]
FBC_D[31..0]
10
M6A
K4Z80325BC-HC14
FBGA180
COMMON
NORMAL
FBC_D15 FBC_D14 FBC_D13 FBC_D12 FBC_D11 FBC_D10 FBC_D9 FBC_D8
DQ0_A DQ1_A DQ2_A DQ3_A DQ4_A DQ5_A DQ6_A DQ7_A
FBC_EDC1 C2 EDC0_A
FBC_DBI1 D2 DBI0_A
FBC_WCKB01 D4 WCK0_t_A
FBC_WCKB01* D5 WCK0_c_A
x16 x8
FBC_D31 FBC_D30 FBC_D29 FBC_D28 FBC_D27 FBC_D26 FBC_D25 FBC_D24
A12 E13 B12 B11 A13 E12 B13 A3
DQ8_A DQ9_A DQ10_A DQ11_A DQ12_A DQ13_A DQ14_A DQ15_A
NC
FBC_EDC3 C13 EDC1_A GND
FBC_DBI3 D13 DBI1_A
FBC_WCKB23 D11 WCK1_t_A
FBC_WCKB23* D10 WCK1_c_A
M6B
K4Z80325BC-HC14
FBGA180
COMMON
NORMAL
FBC_D7 FBC_D6 FBC_D5 FBC_D4 FBC_D3 FBC_D2 FBC_D1 FBC_D0
DQ0_B DQ1_B DQ2_B DQ3_B DQ4_B DQ5_B DQ6_B DQ7_B
FBC_EDC0 T2 EDC0_B
FBC_DBI0 R2 DBI0_B
FBC_WCK01 R4 WCK0_t_B
FBC_WCK01* R5 WCK0_c_B
FBC_D23 FBC_D22 FBC_D21 FBC_D20 FBC_D19 FBC_D18 FBC_D17 FBC_D16
DQ8_B DQ9_B DQ10_B DQ11_B DQ12_B DQ13_B DQ14_B DQ15_B
FBC_EDC2 T13 EDC1_B
FBC_DBI2 R13 DBI1_B
FBC_WCK23 R11 WCK1_t_B
FBC_WCK23* R10 WCK1_c_B
CA0_A CMD1
CA1_A CMD13
CA2_A CMD12
CA3_A CMD24
CA4_A CMD11
CA5_A CMD15
CA6_A CMD22
CA7_A CMD23
CA8_A CMD0
CA9_A CMD2
CABI_A CMD10
CKE_A CMD14
CA0_B CMD5
CA1_B CMD18
CA2_B CMD7
CA3_B CMD20
CA4_B CMD8
CA5_B CMD16
CA6_B CMD21
CA7_B CMD19
CA8_B CMD6
CA9_B CMD4
CABI_B CMD9
CKE_B CMD17
CMD3 RST*
M6C
K4Z80325BC-HC14
FBGA180
COMMON
FBC_CMD1 H3 CA0_A
FBC_CMD13 G11 CA1_A
FBC_CMD12 G4 CA2_A
FBC_CMD24 H12 CA3_A
FBC_CMD11 H5 CA4_A
FBC_CMD15 H10 CA5_A
FBC_CMD22 J12 CA6_A
FBC_CMD23 J11 CA7_A
FBC_CMD0 J4 CA8_A
FBC_CMD2 J3 CA9_A
FBC_CMD10 J5 CABI_A
FBC_CMD14 G10 CKE_A
FBC_CMD5 L3 CA0_B
FBC_CMD18 M11 CA1_B
FBC_CMD7 M4 CA2_B
FBC_CMD20 L12 CA3_B
FBC_CMD8 L5 CA4_B
FBC_CMD16 L10 CA5_B
FBC_CMD21 K12 CA6_B
FBC_CMD19 K11 CA7_B
FBC_CMD6 K4 CA8_B
FBC_CMD4 K3 CA9_B
FBC_CMD9 K5 CABI_B
FBC_CMD17 M10 CKE_B
FBC_CMD3 J1 RESET
FBC_CLK0* K10 CLK_c
FBC_CLK0 J10 CLK_t
VREFC K1 FBC_VREFC_LO
R574 1K/4/1 5 % 0402 COMMON
TCK N5 SNN_FBCL_TCK_M
TDI F10 SNN_FBCL_TDI_M
TDO N10 SNN_FBCL_TDO_M
TMS F5 SNN_FBCL_TMS_M
ZQ_A J14 FBC_ZQ_1_A
ZQ_B K14 FBC_ZQ_1_B
R578 121/4/1 0402 1 % COMMON
R584 121/4/1 0402 1 % COMMON
RFU_A G5 SNN_FBCL_RFU_A_M
RFU_B M5 SNN_FBCL_RFU_B_M
18x 0402 1uF
C555 C612 C630 C638 C552 C627 C564 C279 C603 C283 C585 C582 C636 C573 C577 C274 C618 C622
1u/4/X5R/6.3V/K
1uF/X
6.3V 10% X6S 0402 COMMON
4x 0603 10uF
C600 C580 C620 C598
10u/6/X5R/6.3V/M
4V 20% X6S 0603 COMMON
CLOSE OR UNDER DRAM
6x 0603W 22uF
C558 C567 C548 C623 C544 C609
22u/6/X5R/6.3V/M
4V 20% X6S 0603W COMMON
2x 0603 10uF
C593 C574
10u/6/X5R/6.3V/M
AROUND DRAM
4x 0402 1uF
C256 C542 C539 C257
1u/4/X5R/6.3V/K
CLOSE OR UNDER DRAM

ASSEMBLY
PAGE DETAIL

<ASSEMBLY_DESCRIPTION>
MEMORY: FBC Partition 31..0

ALL NVIDIA DESIGN SPECIFICATIONS, REFERENCE SPECIFICATIONS, REFERENCE BOARDS, FILES, DRAWINGS, DIAGNOSTICS, LISTS AND OTHER DOCUMENTS OR INFORMATION (TOGETHER AND SEPARATELY, 'MATERIALS') ARE BEING PROVIDED 'AS IS'. THE MATERIALS MAY CONTAIN KNOWN AND UNKNOWN VIOLATIONS OR DEVIATIONS OF INDUSTRY STANDARDS AND SPECIFICATIONS. NVIDIA MAKES NO WARRANTIES, EXPRESSED, IMPLIED, STATUTORY OR OTHERWISE WITH RESPECT TO THE MATERIALS OR OTHERWISE, AND EXPRESSLY DISCLAIMS ALL IMPLIED WARRANTIES INCLUDING, WITHOUT LIMITATION, THE WARRANTIES OF DESIGN, OF NONINFRINGEMENT, MERCHANTABILITY OR FITNESS FOR A PARTICULAR PURPOSE, OR ARISING FROM A COURSE OF DEALING, TRADE USAGE, TRADE PRACTICE, OR INDUSTRY STANDARDS.

GIGABYTE

Title
PCIE

Size	Document Number	Rev
Custom	GV-N3060VISION OC-12GD	1.01

Date: Thursday, January 14, 2021 Sheet 11 of 54

Page12: MEMORY: FBC Partition 63..32

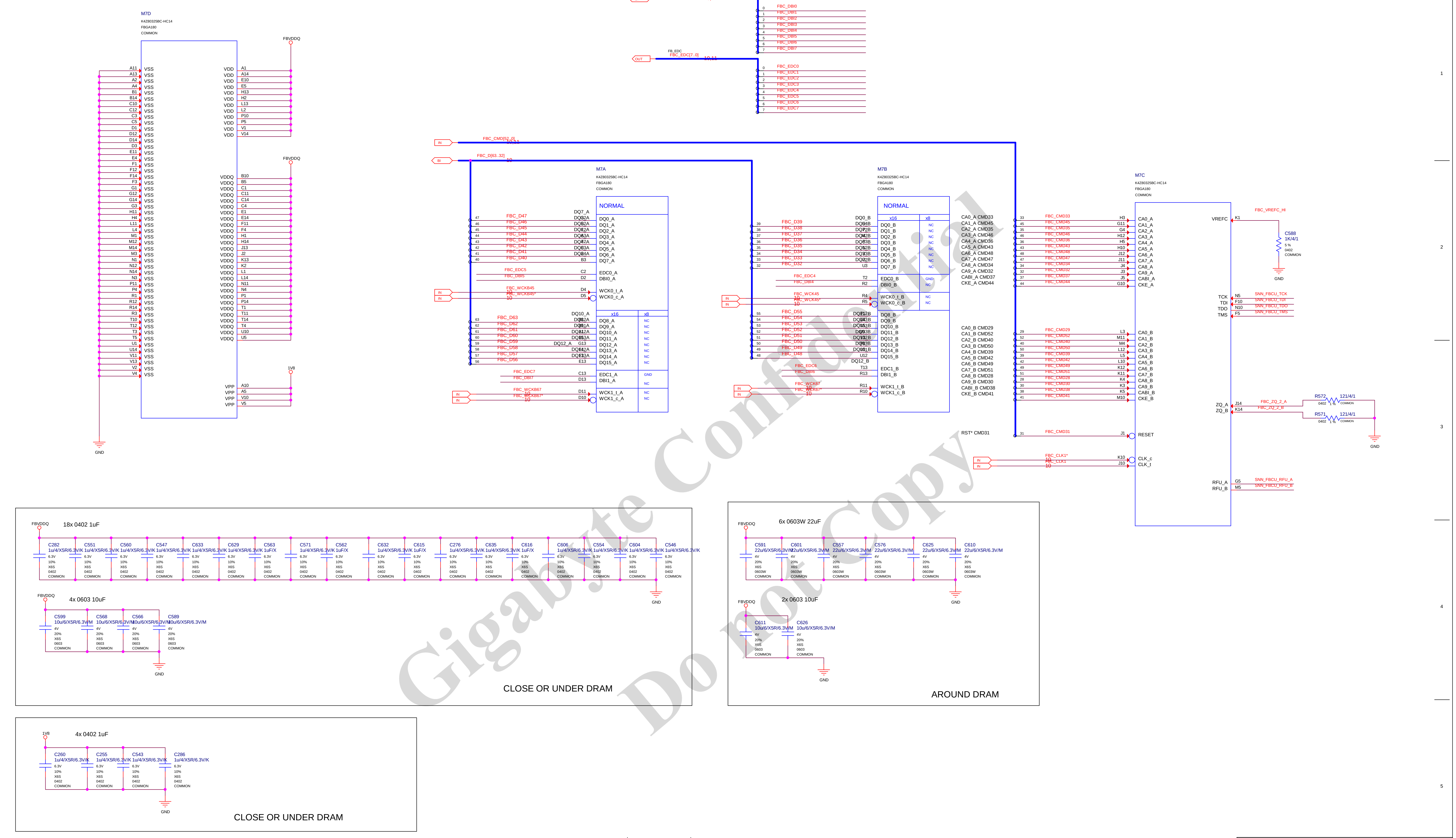

M7D
K4Z80325BC-HC14
FBGA180
COMMON
VSS
VDD
VDDQ
VPP
FBVDDQ
1V8
GND
A11 A13 A2 A4 B1 B14 C10 C12 C3 C5 D1 D12 D14 D3 E11 E4 F1 F12 F14 F3 G1 G12 G14 G3 H11 H4 L11 L4 M1 M12 M14 M3 N1 N12 N14 N3 P11 P4 R1 R12 R14 R3 T10 T12 T3 T5 U1 U14 V11 V13 V2 V4
A1 A14 E10 E5 H13 H2 L13 L2 P10 P5 V1 V14
B10 B5 C1 C11 C14 C4 E1 E14 F11 F4 H1 H14 J13 J2 K13 K2 L1 L14 N11 N4 P1 P14 T1 T11 T14 T4 U10 U5
A10 A5 V10 V5
FB_DBI
FBC_DBI[7..0]
10,11
FBC_DBI0 FBC_DBI1 FBC_DBI2 FBC_DBI3 FBC_DBI4 FBC_DBI5 FBC_DBI6 FBC_DBI7
FB_EDC
FBC_EDC[7..0]
FBC_EDC0 FBC_EDC1 FBC_EDC2 FBC_EDC3 FBC_EDC4 FBC_EDC5 FBC_EDC6 FBC_EDC7
BI
OUT
IN
FBC_CMD[52..0]
FBC_D[63..32]
M7A
NORMAL
x16
x8
NC
GND
DQ0_A DQ1_A DQ2_A DQ3_A DQ4_A DQ5_A DQ6_A DQ7_A
EDC0_A DBI0_A WCK0_t_A WCK0_c_A
DQ8_A DQ9_A DQ10_A DQ11_A DQ12_A DQ13_A DQ14_A DQ15_A
EDC1_A DBI1_A WCK1_t_A WCK1_c_A
FBC_D47 FBC_D46 FBC_D45 FBC_D44 FBC_D43 FBC_D42 FBC_D41 FBC_D40
FBC_EDC5 FBC_DBI5 FBC_WCKB45 FBC_WCKB45*
FBC_D63 FBC_D62 FBC_D61 FBC_D60 FBC_D59 FBC_D58 FBC_D57 FBC_D56
FBC_EDC7 FBC_DBI7 FBC_WCKB67 FBC_WCKB67*
M7B
DQ0_B DQ1_B DQ2_B DQ3_B DQ4_B DQ5_B DQ6_B DQ7_B
EDC0_B DBI0_B WCK0_t_B WCK0_c_B
DQ8_B DQ9_B DQ10_B DQ11_B DQ12_B DQ13_B DQ14_B DQ15_B
EDC1_B DBI1_B WCK1_t_B WCK1_c_B
FBC_D39 FBC_D38 FBC_D37 FBC_D36 FBC_D35 FBC_D34 FBC_D33 FBC_D32
FBC_EDC4 FBC_DBI4 FBC_WCK45 FBC_WCK45*
FBC_D55 FBC_D54 FBC_D53 FBC_D52 FBC_D51 FBC_D50 FBC_D49 FBC_D48
FBC_EDC6 FBC_DBI6 FBC_WCK67 FBC_WCK67*
CA0_A CMD33
CA1_A CMD45
CA2_A CMD35
CA3_A CMD46
CA4_A CMD36
CA5_A CMD43
CA6_A CMD48
CA7_A CMD47
CA8_A CMD34
CA9_A CMD32
CABI_A CMD37
CKE_A CMD44
CA0_B CMD29
CA1_B CMD52
CA2_B CMD40
CA3_B CMD50
CA4_B CMD39
CA5_B CMD42
CA6_B CMD49
CA7_B CMD51
CA8_B CMD28
CA9_B CMD30
CABI_B CMD38
CKE_B CMD41
RST* CMD31
M7C
CA0_A CA1_A CA2_A CA3_A CA4_A CA5_A CA6_A CA7_A CA8_A CA9_A CABI_A CKE_A
CA0_B CA1_B CA2_B CA3_B CA4_B CA5_B CA6_B CA7_B CA8_B CA9_B CABI_B CKE_B
RESET
CLK_c CLK_t
FBC_CLK1* FBC_CLK1
VREFC K1 FBC_VREFC_HI
C588 1K/4/1 5 % 0402 COMMON
TCK N5 SNN_FBCU_TCK
TDI F10 SNN_FBCU_TDI
TDO N10 SNN_FBCU_TDO
TMS F5 SNN_FBCU_TMS
ZQ_A J14 FBC_ZQ_2_A
ZQ_B K14 FBC_ZQ_2_B
R572 121/4/1 0402 1 % COMMON
R571 121/4/1 0402 1 % COMMON
RFU_A G5 SNN_FBCU_RFU_A
RFU_B M5 SNN_FBCU_RFU_B
18x 0402 1uF
C282 C551 C560 C547 C633 C629 C563 C571 C562 C632 C615 C276 C635 C616 C606 C554 C604 C546
1u/4/X5R/6.3V/K
1uF/X
6.3V 10% X6S 0402 COMMON
4x 0603 10uF
C599 C568 C566 C589
10u/6/X5R/6.3V/M
4V 20% X6S 0603 COMMON
CLOSE OR UNDER DRAM
6x 0603W 22uF
C591 C601 C557 C576 C625 C610
22u/6/X5R/6.3V/M
4V 20% X6S 0603W COMMON
2x 0603 10uF
C611 C626
10u/6/X5R/6.3V/M
AROUND DRAM
4x 0402 1uF
C260 C255 C543 C286
1u/4/X5R/6.3V/K
CLOSE OR UNDER DRAM

Gigabyte Confidential Do not Copy

ASSEMBLY
PAGE DETAIL

<ASSEMBLY_DESCRIPTION>
MEMORY: FBC Partition 63..32

ALL NVIDIA DESIGN SPECIFICATIONS, REFERENCE SPECIFICATIONS, REFERENCE BOARDS, FILES, DRAWINGS, DIAGNOSTICS, LISTS AND OTHER DOCUMENTS OR INFORMATION (TOGETHER AND SEPARATELY, 'MATERIALS') ARE BEING PROVIDED 'AS IS'. THE MATERIALS MAY CONTAIN KNOWN AND UNKNOWN VIOLATIONS OR DEVIATIONS OF INDUSTRY STANDARDS AND SPECIFICATIONS. NVIDIA MAKES NO WARRANTIES, EXPRESSED, IMPLIED, STATUTORY OR OTHERWISE WITH RESPECT TO THE MATERIALS OR OTHERWISE, AND EXPRESSLY DISCLAIMS ALL IMPLIED WARRANTIES INCLUDING, WITHOUT LIMITATION, THE WARRANTIES OF DESIGN, OF NONINFRINGEMENT, MERCHANTABILITY OR FITNESS FOR A PARTICULAR PURPOSE, OR ARISING FROM A COURSE OF DEALING, TRADE USAGE, TRADE PRACTICE, OR INDUSTRY STANDARDS.

GIGABYTE

Title
PCIE

Size: Custom
Document Number: GV-N3060VISION OC-12GD
Rev: 1.01
Date: Thursday, January 14, 2021
Sheet 12 of 54

Page13: MEMORY: FBD Partition 31..0

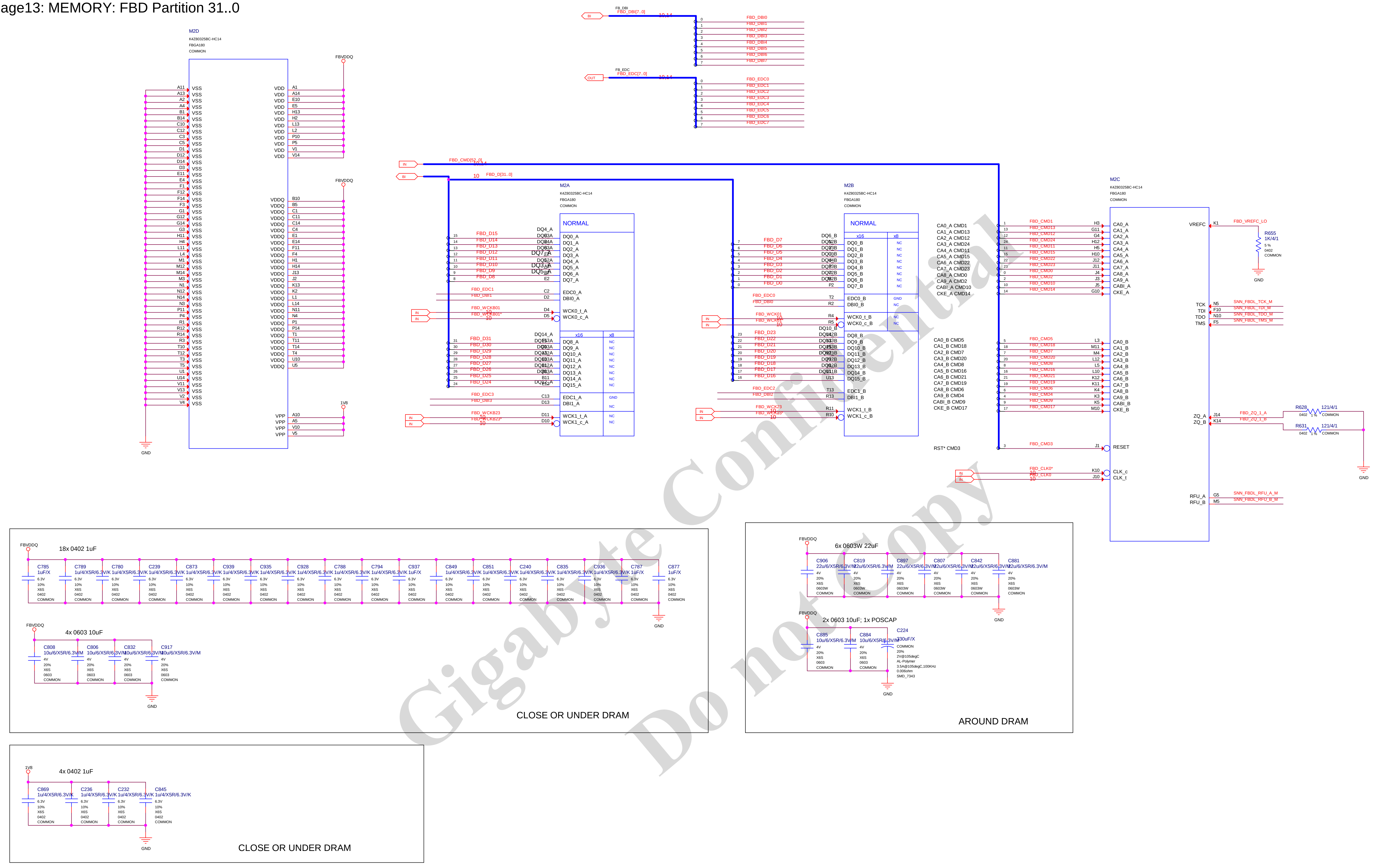
M2D
K4Z80325BC-HC14
FBGA180
COMMON
VSS: A11, A13, A2, A4, B1, B14, C10, C12, C3, C5, D1, D12, D14, D3, E11, E4, F1, F12, F14, F3, G1, G12, G14, G3, H11, H4, L11, L4, M1, M12, M14, M3, N1, N12, N14, N3, P11, P4, R1, R12, R14, R3, T10, T12, T3, T5, U1, U14, V11, V13, V2, V4
GND
FBVDDQ
VDD: A1, A14, E10, E5, H13, H2, L13, L2, P10, P5, V1, V14
VDDQ: B10, B5, C1, C11, C14, C4, E1, E14, F11, F4, H1, H14, J13, J2, K13, K2, L1, L14, N11, N4, P1, P14, T1, T11, T14, T4, U10, U5
1V8
VPP: A10, A5, V10, V5
BI
FB_DBI
FBD_DBI[7..0]
10,14
FBD_DBI0 FBD_DBI1 FBD_DBI2 FBD_DBI3 FBD_DBI4 FBD_DBI5 FBD_DBI6 FBD_DBI7
OUT
FB_EDC
FBD_EDC[7..0]
10,14
FBD_EDC0 FBD_EDC1 FBD_EDC2 FBD_EDC3 FBD_EDC4 FBD_EDC5 FBD_EDC6 FBD_EDC7
IN
FBD_CMD[52..0]
10,14
BI
10
FBD_D[31..0]
M2A
K4Z80325BC-HC14
FBGA180
COMMON
NORMAL
FBD_D15 … FBD_D8 → DQ0_A … DQ7_A
FBD_EDC1 C2 EDC0_A
FBD_DBI1 D2 DBI0_A
FBD_WCKB01 D4 WCK0_t_A
FBD_WCKB01* D5 WCK0_c_A
x16 x8
FBD_D31 … FBD_D24 → DQ8_A … DQ15_A
NC
FBD_EDC3 C13 EDC1_A GND
FBD_DBI3 D13 DBI1_A NC
FBD_WCKB23 D11 WCK1_t_A NC
FBD_WCKB23* D10 WCK1_c_A NC
M2B
K4Z80325BC-HC14
FBGA180
COMMON
NORMAL
FBD_D7 … FBD_D0 → DQ0_B … DQ7_B
FBD_EDC0 T2 EDC0_B GND
FBD_DBI0 R2 DBI0_B NC
FBD_WCK01 R4 WCK0_t_B NC
FBD_WCK01* R5 WCK0_c_B NC
FBD_D23 … FBD_D16 → DQ8_B … DQ15_B
FBD_EDC2 T13 EDC1_B
FBD_DBI2 R13 DBI1_B
FBD_WCK23 R11 WCK1_t_B
FBD_WCK23* R10 WCK1_c_B
CA0_A CMD1
CA1_A CMD13
CA2_A CMD12
CA3_A CMD24
CA4_A CMD11
CA5_A CMD15
CA6_A CMD22
CA7_A CMD23
CA8_A CMD0
CA9_A CMD2
CABI_A CMD10
CKE_A CMD14
CA0_B CMD5
CA1_B CMD18
CA2_B CMD7
CA3_B CMD20
CA4_B CMD8
CA5_B CMD16
CA6_B CMD21
CA7_B CMD19
CA8_B CMD6
CA9_B CMD4
CABI_B CMD9
CKE_B CMD17
RST* CMD3
M2C
K4Z80325BC-HC14
FBGA180
COMMON
FBD_CMD1 H3 CA0_A
FBD_CMD13 G11 CA1_A
FBD_CMD12 G4 CA2_A
FBD_CMD24 H12 CA3_A
FBD_CMD11 H5 CA4_A
FBD_CMD15 H10 CA5_A
FBD_CMD22 J12 CA6_A
FBD_CMD23 J11 CA7_A
FBD_CMD0 J4 CA8_A
FBD_CMD2 J3 CA9_A
FBD_CMD10 J5 CABI_A
FBD_CMD14 G10 CKE_A
FBD_CMD5 L3 CA0_B
FBD_CMD18 M11 CA1_B
FBD_CMD7 M4 CA2_B
FBD_CMD20 L12 CA3_B
FBD_CMD8 L5 CA4_B
FBD_CMD16 L10 CA5_B
FBD_CMD21 K12 CA6_B
FBD_CMD19 K11 CA7_B
FBD_CMD6 K4 CA8_B
FBD_CMD4 K3 CA9_B
FBD_CMD9 K5 CABI_B
FBD_CMD17 M10 CKE_B
FBD_CMD3 J1 RESET
FBD_CLK0* K10 CLK_c
FBD_CLK0 J10 CLK_t
VREFC K1 FBD_VREFC_LO
R655 1K/4/1 5 % 0402 COMMON
TCK N5 SNN_FBDL_TCK_M
TDI F10 SNN_FBDL_TDI_M
TDO N10 SNN_FBDL_TDO_M
TMS F5 SNN_FBDL_TMS_M
ZQ_A J14 FBD_ZQ_1_A
ZQ_B K14 FBD_ZQ_1_B
R628 121/4/1 0402 1 % COMMON
R631 121/4/1 0402 1 % COMMON
RFU_A G5 SNN_FBDL_RFU_A_M
RFU_B M5 SNN_FBDL_RFU_B_M
18x 0402 1uF
C785 1uF/X, C789, C780, C239, C873, C939, C935, C928, C788, C794 1u/4/X5R/6.3V/K, C937 1uF/X, C849, C851, C240, C835, C936 1u/4/X5R/6.3V/K, C787 1uF/X, C877 1uF/X
6.3V 10% X6S 0402 COMMON
4x 0603 10uF
C808, C806, C832, C917 10u/6/X5R/6.3V/M 4V 20% X6S 0603 COMMON
CLOSE OR UNDER DRAM
6x 0603W 22uF
C906, C819, C897, C807, C842, C881 22u/6/X5R/6.3V/M 4V 20% X6S 0603W COMMON
2x 0603 10uF; 1x POSCAP
C885, C884 10u/6/X5R/6.3V/M 4V 20% X6S 0603 COMMON
C224 330uF/X COMMON 20% 2V@105degC AL-Polymer 3.5A@105degC,100KHz 0.006ohm SMD_7343
AROUND DRAM
4x 0402 1uF
C869, C236, C232, C845 1u/4/X5R/6.3V/K 6.3V 10% X6S 0402 COMMON
CLOSE OR UNDER DRAM

ASSEMBLY <ASSEMBLY_DESCRIPTION>
PAGE DETAIL MEMORY: FBD Partition 31..0

ALL NVIDIA DESIGN SPECIFICATIONS, REFERENCE SPECIFICATIONS, REFERENCE BOARDS, FILES, DRAWINGS, DIAGNOSTICS, LISTS AND OTHER DOCUMENTS OR INFORMATION (TOGETHER AND SEPARATELY, 'MATERIALS') ARE BEING PROVIDED 'AS IS'. THE MATERIALS MAY CONTAIN KNOWN AND UNKNOWN VIOLATIONS OR DEVIATIONS OF INDUSTRY STANDARDS AND SPECIFICATIONS. NVIDIA MAKES NO WARRANTIES, EXPRESSED, IMPLIED, STATUTORY OR OTHERWISE WITH RESPECT TO THE MATERIALS OR OTHERWISE, AND EXPRESSLY DISCLAIMS ALL IMPLIED WARRANTIES INCLUDING, WITHOUT LIMITATION, THE WARRANTIES OF DESIGN, OF NONINFRINGEMENT, MERCHANTABILITY OR FITNESS FOR A PARTICULAR PURPOSE, OR ARISING FROM A COURSE OF DEALING, TRADE USAGE, TRADE PRACTICE, OR INDUSTRY STANDARDS.

GIGABYTE
Title PCIE
Size Custom Document Number GV-N3060VISION OC-12GD Rev 1.01
Date: Thursday, January 14, 2021 Sheet 13 of 54

Page14: MEMORY: FBD Partition 63..32

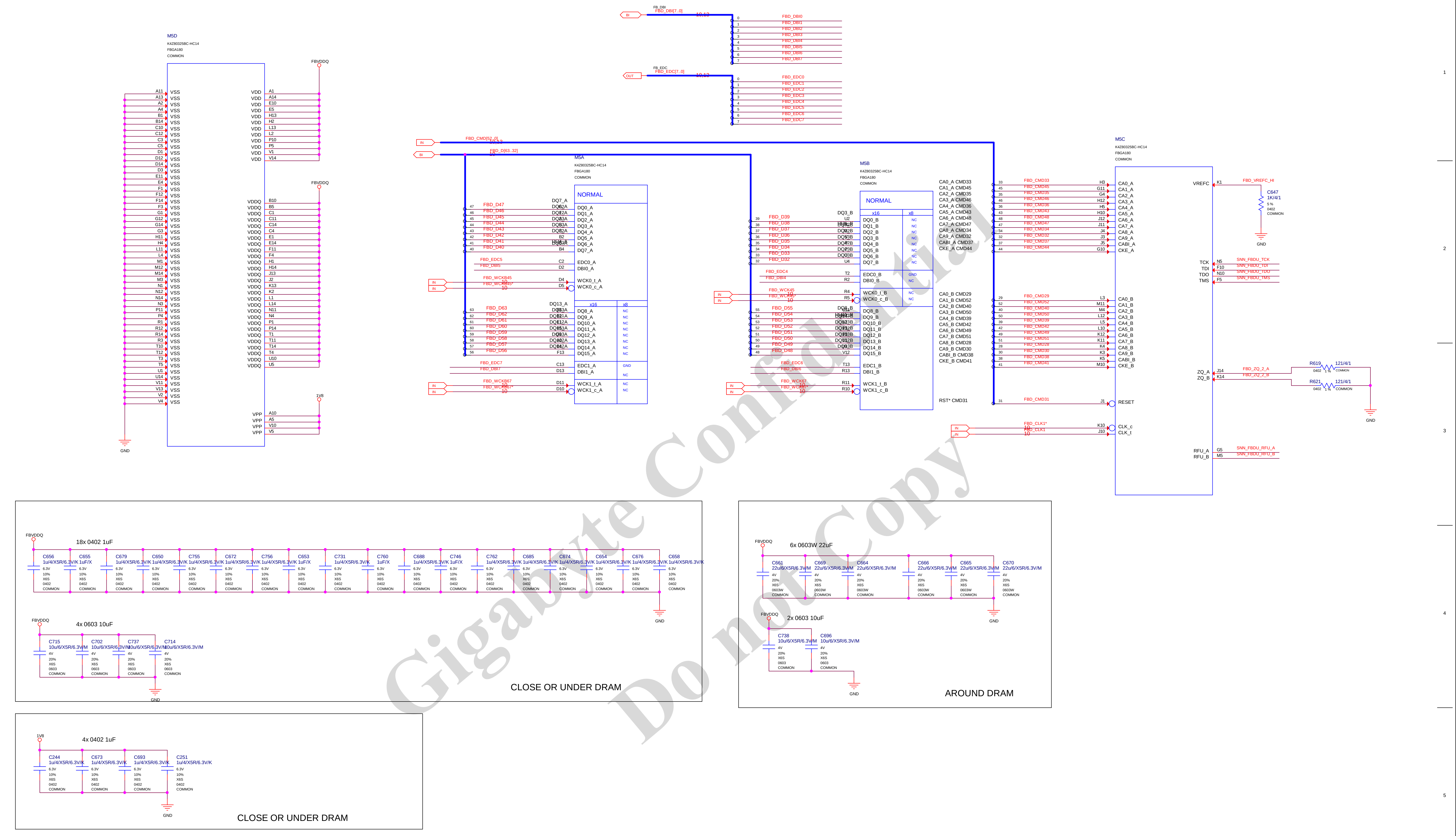
M5D
K4Z80325BC-HC14
FBGA180
COMMON
VSS
A11 A13 A2 A4 B1 B14 C10 C12 C3 C5 D1 D12 D14 D3 E11 E4 F1 F12 F14 F3 G1 G12 G14 G3 H11 H4 L11 L4 M1 M12 M14 M3 N1 N12 N14 N3 P11 P4 R1 R12 R14 R3 T10 T12 T3 T5 U1 U14 V11 V13 V2 V4
GND
FBVDDQ
VDD
A1 A14 E10 E5 H13 H2 L13 L2 P10 P5 V1 V14
VDDQ
B10 B5 C1 C11 C14 C4 E1 E14 F11 F4 H1 H14 J13 J2 K13 K2 L1 L14 N11 N4 P1 P14 T1 T11 T14 T4 U10 U5
1V8
VPP
A10 A5 V10 V5
BI
FB_DBI
FBD_DBI[7..0]
10,12
FBD_DBI0 FBD_DBI1 FBD_DBI2 FBD_DBI3 FBD_DBI4 FBD_DBI5 FBD_DBI6 FBD_DBI7
OUT
FB_EDC
FBD_EDC[7..0]
FBD_EDC0 FBD_EDC1 FBD_EDC2 FBD_EDC3 FBD_EDC4 FBD_EDC5 FBD_EDC6 FBD_EDC7
IN
FBD_CMD[52..0]
FBD_D[63..32]
M5A
K4Z80325BC-HC14
FBGA180
COMMON
NORMAL
FBD_D47 FBD_D46 FBD_D45 FBD_D44 FBD_D43 FBD_D42 FBD_D41 FBD_D40
DQ0_A DQ1_A DQ2_A DQ3_A DQ4_A DQ5_A DQ6_A DQ7_A
FBD_EDC5 C2 EDC0_A
FBD_DBI5 D2 DBI0_A
FBD_WCKB45 D4 WCK0_t_A
FBD_WCKB45* D5 WCK0_c_A
x16 x8
FBD_D63 FBD_D62 FBD_D61 FBD_D60 FBD_D59 FBD_D58 FBD_D57 FBD_D56
DQ8_A DQ9_A DQ10_A DQ11_A DQ12_A DQ13_A DQ14_A DQ15_A
NC
FBD_EDC7 C13 EDC1_A
FBD_DBI7 D13 DBI1_A
GND
FBD_WCKB67 D11 WCK1_t_A
FBD_WCKB67* D10 WCK1_c_A
M5B
K4Z80325BC-HC14
FBGA180
COMMON
NORMAL
FBD_D39 FBD_D38 FBD_D37 FBD_D36 FBD_D35 FBD_D34 FBD_D33 FBD_D32
DQ0_B DQ1_B DQ2_B DQ3_B DQ4_B DQ5_B DQ6_B DQ7_B
FBD_EDC4 T2 EDC0_B
FBD_DBI4 R2 DBI0_B
FBD_WCK45 R4 WCK0_t_B
FBD_WCK45* R5 WCK0_c_B
FBD_D55 FBD_D54 FBD_D53 FBD_D52 FBD_D51 FBD_D50 FBD_D49 FBD_D48
DQ8_B DQ9_B DQ10_B DQ11_B DQ12_B DQ13_B DQ14_B DQ15_B
FBD_EDC6 T13 EDC1_B
FBD_DBI6 R13 DBI1_B
FBD_WCK67 R11 WCK1_t_B
FBD_WCK67* R10 WCK1_c_B
CA0_A CMD33
CA1_A CMD45
CA2_A CMD35
CA3_A CMD46
CA4_A CMD36
CA5_A CMD43
CA6_A CMD48
CA7_A CMD47
CA8_A CMD34
CA9_A CMD32
CABI_A CMD37
CKE_A CMD44
CA0_B CMD29
CA1_B CMD52
CA2_B CMD40
CA3_B CMD50
CA4_B CMD39
CA5_B CMD42
CA6_B CMD49
CA7_B CMD51
CA8_B CMD28
CA9_B CMD30
CABI_B CMD38
CKE_B CMD41
RST* CMD31
M5C
K4Z80325BC-HC14
FBGA180
COMMON
H3 G11 G4 H12 H5 H10 J12 J11 J4 J3 J5 G10
CA0_A CA1_A CA2_A CA3_A CA4_A CA5_A CA6_A CA7_A CA8_A CA9_A CABI_A CKE_A
L3 M11 M4 L12 L5 L10 K12 K11 K4 K3 K5 M10
CA0_B CA1_B CA2_B CA3_B CA4_B CA5_B CA6_B CA7_B CA8_B CA9_B CABI_B CKE_B
FBD_CMD31 J1 RESET
FBD_CLK1* K10 CLK_c
FBD_CLK1 J10 CLK_t
VREFC K1 FBD_VREFC_HI
C647
1K/4/1
5 %
0402
COMMON
TCK N5 SNN_FBDU_TCK
TDI F10 SNN_FBDU_TDI
TDO N10 SNN_FBDU_TDO
TMS F5 SNN_FBDU_TMS
ZQ_A J14 FBD_ZQ_2_A
ZQ_B K14 FBD_ZQ_2_B
R619 121/4/1 0402 1 % COMMON
R621 121/4/1 0402 1 % COMMON
RFU_A G5 SNN_FBDU_RFU_A
RFU_B M5 SNN_FBDU_RFU_B
18x 0402 1uF
C656 C655 C679 C650 C755 C672 C756 C653 C731 C760 C688 C746 C762 C685 C674 C654 C676 C658
1u/4/X5R/6.3V/K
1uF/X
6.3V
10%
X6S
0402
COMMON
4x 0603 10uF
C715 C702 C737 C714
10u/6/X5R/6.3V/M
4V
20%
X6S
0603
COMMON
CLOSE OR UNDER DRAM
6x 0603W 22uF
C661 C669 C664 C666 C665 C670
22u/6/X5R/6.3V/M
0603W
2x 0603 10uF
C738 C696
10u/6/X5R/6.3V/M
AROUND DRAM
4x 0402 1uF
C244 C673 C693 C251
1u/4/X5R/6.3V/K
CLOSE OR UNDER DRAM

ASSEMBLY <ASSEMBLY_DESCRIPTION>
PAGE DETAIL MEMORY: FBD Partition 63..32

ALL NVIDIA DESIGN SPECIFICATIONS, REFERENCE SPECIFICATIONS, REFERENCE BOARDS, FILES, DRAWINGS, DIAGNOSTICS, LISTS AND OTHER DOCUMENTS OR INFORMATION (TOGETHER AND SEPARATELY, 'MATERIALS') ARE BEING PROVIDED 'AS IS'. THE MATERIALS MAY CONTAIN KNOWN AND UNKNOWN VIOLATIONS OR DEVIATIONS OF INDUSTRY STANDARDS AND SPECIFICATIONS. NVIDIA MAKES NO WARRANTIES, EXPRESSED, IMPLIED, STATUTORY OR OTHERWISE WITH RESPECT TO THE MATERIALS OR OTHERWISE, AND EXPRESSLY DISCLAIMS ALL IMPLIED WARRANTIES INCLUDING, WITHOUT LIMITATION, THE WARRANTIES OF DESIGN, OF NONINFRINGEMENT, MERCHANTABILITY OR FITNESS FOR A PARTICULAR PURPOSE, OR ARISING FROM A COURSE OF DEALING, TRADE USAGE, TRADE PRACTICE, OR INDUSTRY STANDARDS.

GIGABYTE		
Title: PCIE		
Size: Custom	Document Number: GV-N3060VISION OC-12GD	Rev: 1.01
Date: Thursday, January 14, 2021	Sheet 14 of 54	

Page15: GPU PWR and GND

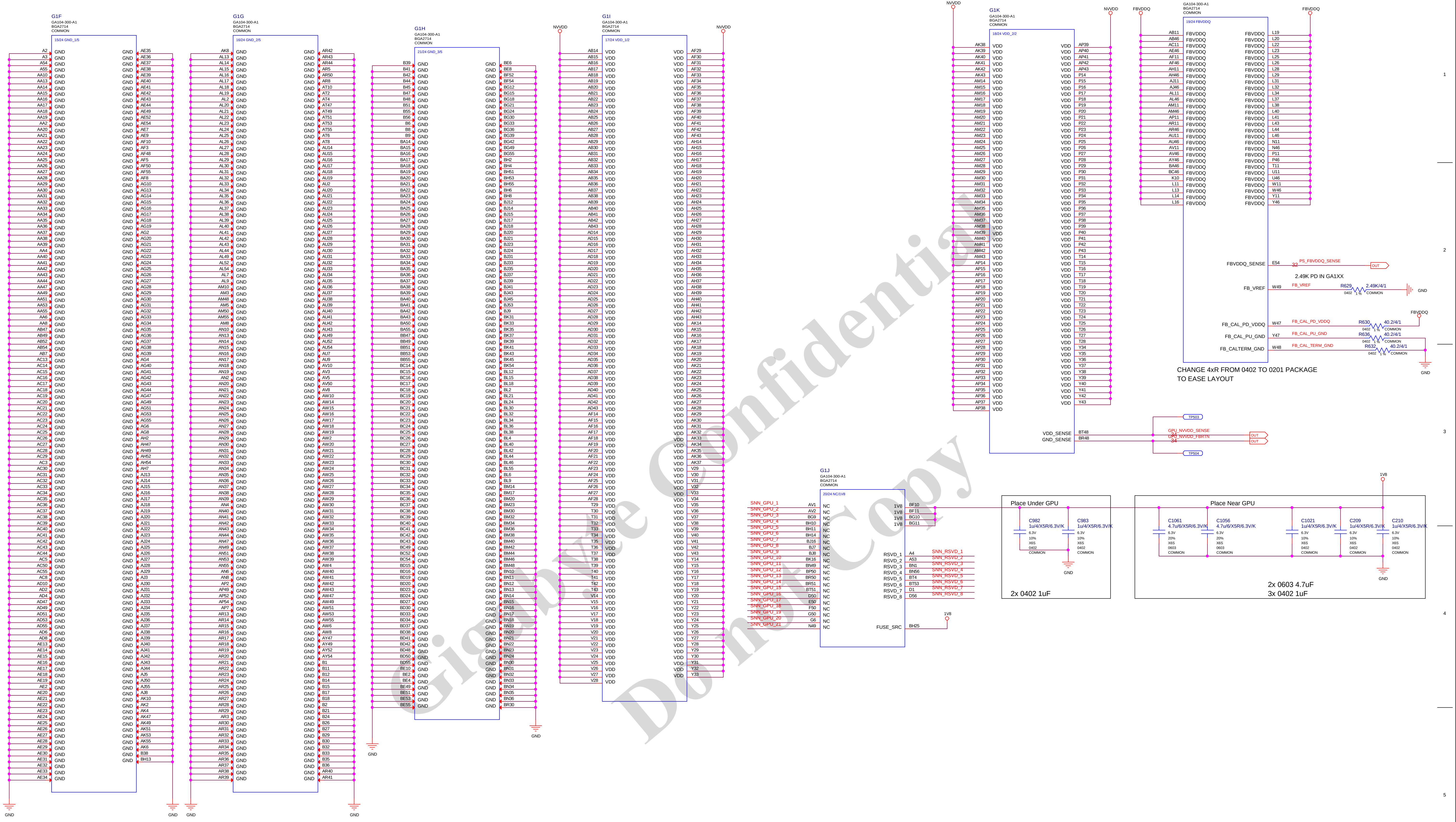

G1F GA104-300-A1 BGA2714 COMMON 15/24 GND_1/5
G1G GA104-300-A1 BGA2714 COMMON 16/24 GND_2/5
G1H GA104-300-A1 BGA2714 COMMON 21/24 GND_3/5
G1I GA104-300-A1 BGA2714 COMMON 17/24 VDD_1/2
G1K GA104-300-A1 BGA2714 COMMON 18/24 VDD_2/2
G1L GA104-300-A1 BGA2714 COMMON 19/24 FBVDDQ
G1J GA104-300-A1 BGA2714 COMMON 20/24 NC/1V8
GND
VDD
NVVDD
FBVDDQ
FBVDDQ_SENSE
E54
PS_FBVDDQ_SENSE
32
OUT
2.49K PD IN GA1XX
FB_VREF
W49
R629 2.49K/4/1 0402 1% COMMON
FB_CAL_PD_VDDQ
W47
R630 40.2/4/1 0402 1% COMMON
FB_CAL_PU_GND
Y47
R636 40.2/4/1 0402 1% COMMON
FB_CALTERM_GND
FB_CAL_TERM_GND
W48
R632 40.2/4/1 0402 1% COMMON
CHANGE 4xR FROM 0402 TO 0201 PACKAGE TO EASE LAYOUT
VDD_SENSE
BT48
GND_SENSE
BR48
GPU_NVVDD_SENSE
GPU_NVVDD_FBRTN
34
TP503
TP504
SNN_GPU_1 … SNN_GPU_21
NC
1V8
BF10
BF11
BG10
BG11
RSVD_1 … RSVD_8
SNN_RSVD_1 … SNN_RSVD_8
FUSE_SRC
BH25
Place Under GPU
C982 1u/4/X5R/6.3V/K 6.3V 10% X6S 0402 COMMON
C983 1u/4/X5R/6.3V/K 6.3V 10% X6S 0402 COMMON
2x 0402 1uF
Place Near GPU
C1061 4.7u/6/X5R/6.3V/K 6.3V 20% X6S 0603 COMMON
C1056 4.7u/6/X5R/6.3V/K 6.3V 20% X6S 0603 COMMON
C1021 1u/4/X5R/6.3V/K 6.3V 10% X6S 0402 COMMON
C209 1u/4/X5R/6.3V/K 6.3V 10% X6S 0402 COMMON
C210 1u/4/X5R/6.3V/K 6.3V 10% X6S 0402 COMMON
2x 0603 4.7uF
3x 0402 1uF

ASSEMBLY
PAGE DETAIL

<ASSEMBLY_DESCRIPTION>
GPU PWR and GND

ALL NVIDIA DESIGN SPECIFICATIONS, REFERENCE SPECIFICATIONS, REFERENCE BOARDS, FILES, DRAWINGS, DIAGNOSTICS, LISTS AND OTHER DOCUMENTS OR INFORMATION (TOGETHER AND SEPARATELY, 'MATERIALS') ARE BEING PROVIDED 'AS IS'. THE MATERIALS MAY CONTAIN KNOWN AND UNKNOWN VIOLATIONS OR DEVIATIONS OF INDUSTRY STANDARDS AND SPECIFICATIONS. NVIDIA MAKES NO WARRANTIES, EXPRESSED, IMPLIED, STATUTORY OR OTHERWISE WITH RESPECT TO THE MATERIALS OR OTHERWISE, AND EXPRESSLY DISCLAIMS ALL IMPLIED WARRANTIES INCLUDING, WITHOUT LIMITATION, THE WARRANTIES OF DESIGN, OF NONINFRINGEMENT, MERCHANTABILITY OR FITNESS FOR A PARTICULAR PURPOSE, OR ARISING FROM A COURSE OF DEALING, TRADE USAGE, TRADE PRACTICE, OR INDUSTRY STANDARDS.

GIGABYTE

Title: PCIE

Size: Custom
Document Number: GV-N3060VISION OC-12GD
Rev: 1.01
Date: Thursday, January 14, 2021
Sheet 15 of 54

Page16: GPU PWR and GND 2

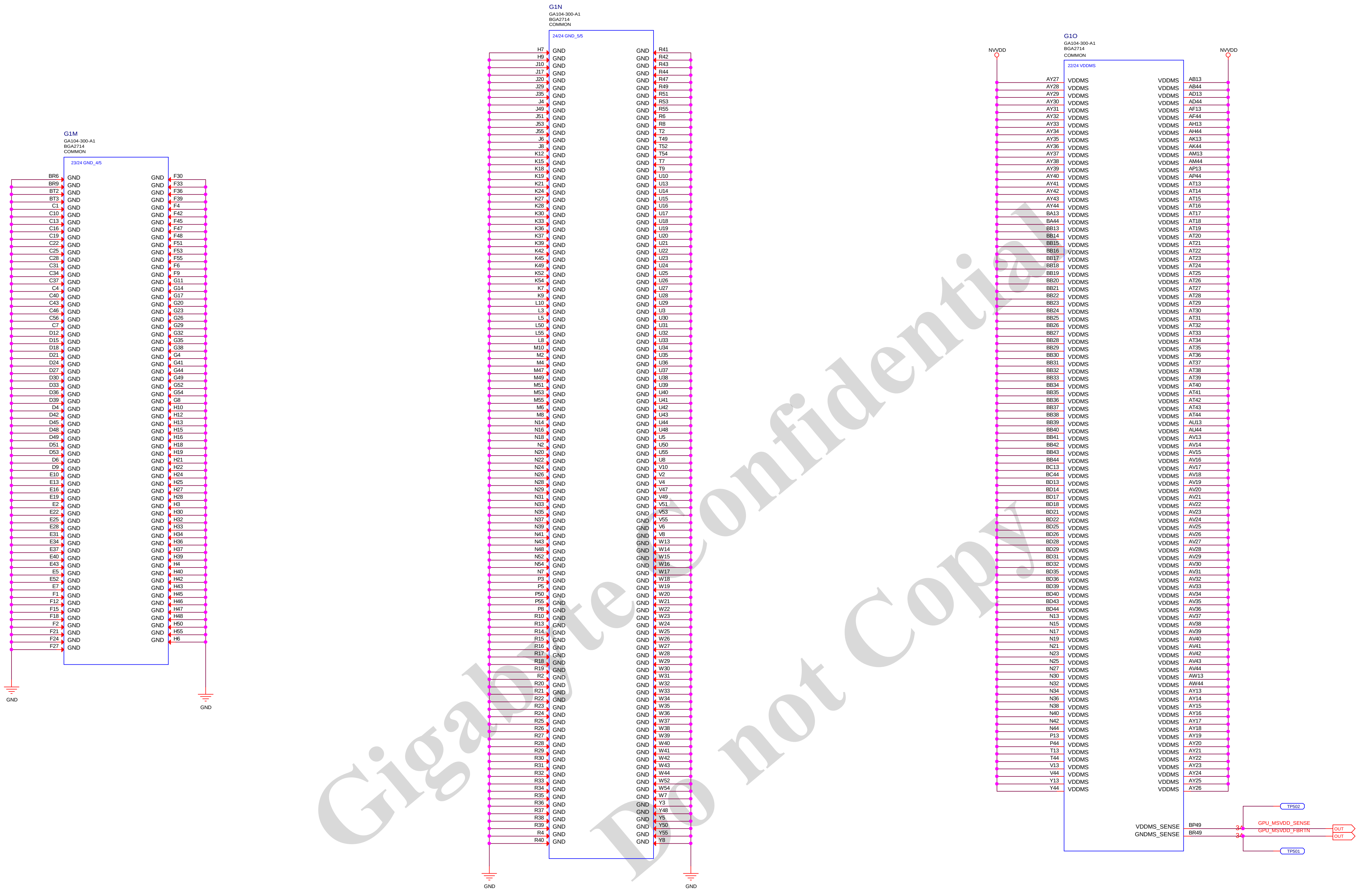
G1M
GA104-300-A1
BGA2714
COMMON
23/24 GND_4/5
BR6 GND
BR9 GND
BT2 GND
BT3 GND
C1 GND
C10 GND
C13 GND
C16 GND
C19 GND
C22 GND
C25 GND
C28 GND
C31 GND
C34 GND
C37 GND
C4 GND
C40 GND
C43 GND
C46 GND
C56 GND
C7 GND
D12 GND
D15 GND
D18 GND
D21 GND
D24 GND
D27 GND
D30 GND
D33 GND
D36 GND
D39 GND
D4 GND
D42 GND
D45 GND
D48 GND
D49 GND
D51 GND
D53 GND
D6 GND
D9 GND
E10 GND
E13 GND
E16 GND
E19 GND
E2 GND
E22 GND
E25 GND
E28 GND
E31 GND
E34 GND
E37 GND
E40 GND
E43 GND
E5 GND
E52 GND
E7 GND
F1 GND
F12 GND
F15 GND
F18 GND
F2 GND
F21 GND
F24 GND
F27 GND
GND F30
GND F33
GND F36
GND F39
GND F4
GND F42
GND F45
GND F47
GND F48
GND F51
GND F53
GND F55
GND F6
GND F9
GND G11
GND G14
GND G17
GND G20
GND G23
GND G26
GND G29
GND G32
GND G35
GND G38
GND G4
GND G41
GND G44
GND G49
GND G52
GND G54
GND G8
GND H10
GND H12
GND H13
GND H15
GND H16
GND H18
GND H19
GND H21
GND H22
GND H24
GND H25
GND H27
GND H28
GND H3
GND H30
GND H32
GND H33
GND H34
GND H36
GND H37
GND H39
GND H4
GND H40
GND H42
GND H43
GND H45
GND H46
GND H47
GND H48
GND H50
GND H55
GND H6
GND
GND
G1N
GA104-300-A1
BGA2714
COMMON
24/24 GND_5/5
H7 GND
H9 GND
J10 GND
J17 GND
J20 GND
J29 GND
J35 GND
J4 GND
J49 GND
J51 GND
J53 GND
J55 GND
J6 GND
J8 GND
K12 GND
K15 GND
K18 GND
K19 GND
K21 GND
K24 GND
K27 GND
K28 GND
K30 GND
K33 GND
K36 GND
K37 GND
K39 GND
K42 GND
K45 GND
K49 GND
K52 GND
K54 GND
K7 GND
K9 GND
L10 GND
L3 GND
L5 GND
L50 GND
L55 GND
L8 GND
M10 GND
M2 GND
M4 GND
M47 GND
M49 GND
M51 GND
M53 GND
M55 GND
M6 GND
M8 GND
N14 GND
N16 GND
N18 GND
N2 GND
N20 GND
N22 GND
N24 GND
N26 GND
N28 GND
N29 GND
N31 GND
N33 GND
N35 GND
N37 GND
N39 GND
N41 GND
N43 GND
N48 GND
N52 GND
N54 GND
N7 GND
P3 GND
P5 GND
P50 GND
P55 GND
P8 GND
R10 GND
R13 GND
R14 GND
R15 GND
R16 GND
R17 GND
R18 GND
R19 GND
R2 GND
R20 GND
R21 GND
R22 GND
R23 GND
R24 GND
R25 GND
R26 GND
R27 GND
R28 GND
R29 GND
R30 GND
R31 GND
R32 GND
R33 GND
R34 GND
R35 GND
R36 GND
R37 GND
R38 GND
R39 GND
R4 GND
R40 GND
GND R41
GND R42
GND R43
GND R44
GND R47
GND R49
GND R51
GND R53
GND R55
GND R6
GND R8
GND T2
GND T49
GND T52
GND T54
GND T7
GND T9
GND U10
GND U13
GND U14
GND U15
GND U16
GND U17
GND U18
GND U19
GND U20
GND U21
GND U22
GND U23
GND U24
GND U25
GND U26
GND U27
GND U28
GND U29
GND U3
GND U30
GND U31
GND U32
GND U33
GND U34
GND U35
GND U36
GND U37
GND U38
GND U39
GND U40
GND U41
GND U42
GND U43
GND U44
GND U48
GND U5
GND U50
GND U55
GND U8
GND V10
GND V2
GND V4
GND V47
GND V49
GND V51
GND V53
GND V55
GND V6
GND V8
GND W13
GND W14
GND W15
GND W16
GND W17
GND W18
GND W19
GND W20
GND W21
GND W22
GND W23
GND W24
GND W25
GND W26
GND W27
GND W28
GND W29
GND W30
GND W31
GND W32
GND W33
GND W34
GND W35
GND W36
GND W37
GND W38
GND W39
GND W40
GND W41
GND W42
GND W43
GND W44
GND W52
GND W54
GND W7
GND Y3
GND Y48
GND Y5
GND Y50
GND Y55
GND Y8
GND
GND
G1O
GA104-300-A1
BGA2714
COMMON
22/24 VDDMS
NVVDD
NVVDD
AY27 VDDMS
AY28 VDDMS
AY29 VDDMS
AY30 VDDMS
AY31 VDDMS
AY32 VDDMS
AY33 VDDMS
AY34 VDDMS
AY35 VDDMS
AY36 VDDMS
AY37 VDDMS
AY38 VDDMS
AY39 VDDMS
AY40 VDDMS
AY41 VDDMS
AY42 VDDMS
AY43 VDDMS
AY44 VDDMS
BA13 VDDMS
BA44 VDDMS
BB13 VDDMS
BB14 VDDMS
BB15 VDDMS
BB16 VDDMS
BB17 VDDMS
BB18 VDDMS
BB19 VDDMS
BB20 VDDMS
BB21 VDDMS
BB22 VDDMS
BB23 VDDMS
BB24 VDDMS
BB25 VDDMS
BB26 VDDMS
BB27 VDDMS
BB28 VDDMS
BB29 VDDMS
BB30 VDDMS
BB31 VDDMS
BB32 VDDMS
BB33 VDDMS
BB34 VDDMS
BB35 VDDMS
BB36 VDDMS
BB37 VDDMS
BB38 VDDMS
BB39 VDDMS
BB40 VDDMS
BB41 VDDMS
BB42 VDDMS
BB43 VDDMS
BB44 VDDMS
BC13 VDDMS
BC44 VDDMS
BD13 VDDMS
BD14 VDDMS
BD17 VDDMS
BD18 VDDMS
BD21 VDDMS
BD22 VDDMS
BD25 VDDMS
BD26 VDDMS
BD28 VDDMS
BD29 VDDMS
BD31 VDDMS
BD32 VDDMS
BD35 VDDMS
BD36 VDDMS
BD39 VDDMS
BD40 VDDMS
BD43 VDDMS
BD44 VDDMS
N13 VDDMS
N15 VDDMS
N17 VDDMS
N19 VDDMS
N21 VDDMS
N23 VDDMS
N25 VDDMS
N27 VDDMS
N30 VDDMS
N32 VDDMS
N34 VDDMS
N36 VDDMS
N38 VDDMS
N40 VDDMS
N42 VDDMS
N44 VDDMS
P13 VDDMS
P44 VDDMS
T13 VDDMS
T44 VDDMS
V13 VDDMS
V44 VDDMS
Y13 VDDMS
Y44 VDDMS
VDDMS AB13
VDDMS AB44
VDDMS AD13
VDDMS AD44
VDDMS AF13
VDDMS AF44
VDDMS AH13
VDDMS AH44
VDDMS AK13
VDDMS AK44
VDDMS AM13
VDDMS AM44
VDDMS AP13
VDDMS AP44
VDDMS AT13
VDDMS AT14
VDDMS AT15
VDDMS AT16
VDDMS AT17
VDDMS AT18
VDDMS AT19
VDDMS AT20
VDDMS AT21
VDDMS AT22
VDDMS AT23
VDDMS AT24
VDDMS AT25
VDDMS AT26
VDDMS AT27
VDDMS AT28
VDDMS AT29
VDDMS AT30
VDDMS AT31
VDDMS AT32
VDDMS AT33
VDDMS AT34
VDDMS AT35
VDDMS AT36
VDDMS AT37
VDDMS AT38
VDDMS AT39
VDDMS AT40
VDDMS AT41
VDDMS AT42
VDDMS AT43
VDDMS AT44
VDDMS AU13
VDDMS AU44
VDDMS AV13
VDDMS AV14
VDDMS AV15
VDDMS AV16
VDDMS AV17
VDDMS AV18
VDDMS AV19
VDDMS AV20
VDDMS AV21
VDDMS AV22
VDDMS AV23
VDDMS AV24
VDDMS AV25
VDDMS AV26
VDDMS AV27
VDDMS AV28
VDDMS AV29
VDDMS AV30
VDDMS AV31
VDDMS AV32
VDDMS AV33
VDDMS AV34
VDDMS AV35
VDDMS AV36
VDDMS AV37
VDDMS AV38
VDDMS AV39
VDDMS AV40
VDDMS AV41
VDDMS AV42
VDDMS AV43
VDDMS AV44
VDDMS AW13
VDDMS AW44
VDDMS AY13
VDDMS AY14
VDDMS AY15
VDDMS AY16
VDDMS AY17
VDDMS AY18
VDDMS AY19
VDDMS AY20
VDDMS AY21
VDDMS AY22
VDDMS AY23
VDDMS AY24
VDDMS AY25
VDDMS AY26
VDDMS_SENSE BP49
GNDMS_SENSE BR49
TP502
34
34
GPU_MSVDD_SENSE
GPU_MSVDD_FBRTN
OUT
OUT
TP501

ALL NVIDIA DESIGN SPECIFICATIONS, REFERENCE SPECIFICATIONS, REFERENCE BOARDS, FILES, DRAWINGS, DIAGNOSTICS, LISTS AND OTHER DOCUMENTS OR INFORMATION (TOGETHER AND SEPARATELY, 'MATERIALS') ARE BEING PROVIDED 'AS IS'. THE MATERIALS MAY CONTAIN KNOWN AND UNKNOWN VIOLATIONS OR DEVIATIONS OF INDUSTRY STANDARDS AND SPECIFICATIONS. NVIDIA MAKES NO WARRANTIES, EXPRESSED, IMPLIED, STATUTORY OR OTHERWISE WITH RESPECT TO THE MATERIALS OR OTHERWISE, AND EXPRESSLY DISCLAIMS ALL IMPLIED WARRANTIES INCLUDING, WITHOUT LIMITATION, THE WARRANTIES OF DESIGN, OF NONINFRINGEMENT, MERCHANTABILITY OR FITNESS FOR A PARTICULAR PURPOSE, OR ARISING FROM A COURSE OF DEALING, TRADE USAGE, TRADE PRACTICE, OR INDUSTRY STANDARDS.

ASSEMBLY	<ASSEMBLY_DESCRIPTION>
PAGE DETAIL	GPU PWR and GND 2

GIGABYTE

Title	PCIE		
Size Custom	Document Number GV-N3060VISION OC-12GD		Rev 1.01
Date:	Thursday, January 14, 2021	Sheet 16 of 54	

Page17: GPU XVDD

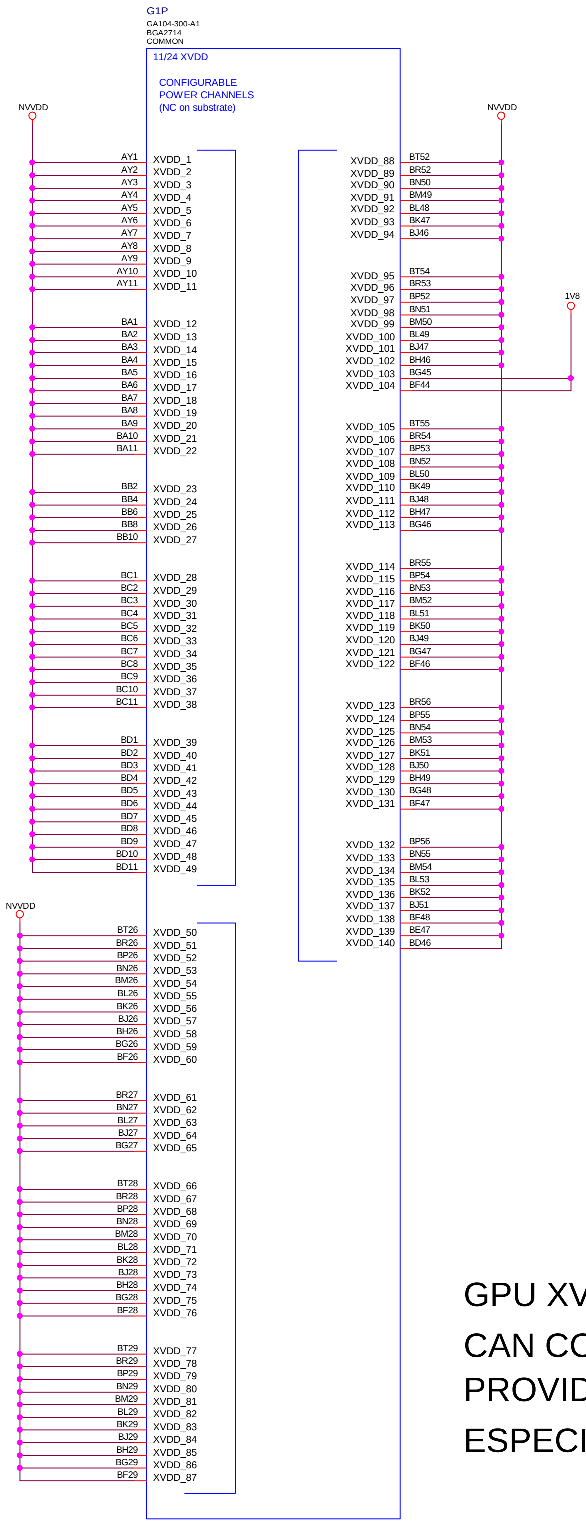
G1P
GA104-300-A1
BGA2714
COMMON
11/24 XVDD
CONFIGURABLE
POWER CHANNELS
(NC on substrate)
NVVDD
AY1 XVDD_1
AY2 XVDD_2
AY3 XVDD_3
AY4 XVDD_4
AY5 XVDD_5
AY6 XVDD_6
AY7 XVDD_7
AY8 XVDD_8
AY9 XVDD_9
AY10 XVDD_10
AY11 XVDD_11
BA1 XVDD_12
BA2 XVDD_13
BA3 XVDD_14
BA4 XVDD_15
BA5 XVDD_16
BA6 XVDD_17
BA7 XVDD_18
BA8 XVDD_19
BA9 XVDD_20
BA10 XVDD_21
BA11 XVDD_22
BB2 XVDD_23
BB4 XVDD_24
BB6 XVDD_25
BB8 XVDD_26
BB10 XVDD_27
BC1 XVDD_28
BC2 XVDD_29
BC3 XVDD_30
BC4 XVDD_31
BC5 XVDD_32
BC6 XVDD_33
BC7 XVDD_34
BC8 XVDD_35
BC9 XVDD_36
BC10 XVDD_37
BC11 XVDD_38
BD1 XVDD_39
BD2 XVDD_40
BD3 XVDD_41
BD4 XVDD_42
BD5 XVDD_43
BD6 XVDD_44
BD7 XVDD_45
BD8 XVDD_46
BD9 XVDD_47
BD10 XVDD_48
BD11 XVDD_49
NVVDD
BT26 XVDD_50
BR26 XVDD_51
BP26 XVDD_52
BN26 XVDD_53
BM26 XVDD_54
BL26 XVDD_55
BK26 XVDD_56
BJ26 XVDD_57
BH26 XVDD_58
BG26 XVDD_59
BF26 XVDD_60
BR27 XVDD_61
BN27 XVDD_62
BL27 XVDD_63
BJ27 XVDD_64
BG27 XVDD_65
BT28 XVDD_66
BR28 XVDD_67
BP28 XVDD_68
BN28 XVDD_69
BM28 XVDD_70
BL28 XVDD_71
BK28 XVDD_72
BJ28 XVDD_73
BH28 XVDD_74
BG28 XVDD_75
BF28 XVDD_76
BT29 XVDD_77
BR29 XVDD_78
BP29 XVDD_79
BN29 XVDD_80
BM29 XVDD_81
BL29 XVDD_82
BK29 XVDD_83
BJ29 XVDD_84
BH29 XVDD_85
BG29 XVDD_86
BF29 XVDD_87
NVVDD
XVDD_88 BT52
XVDD_89 BR52
XVDD_90 BN50
XVDD_91 BM49
XVDD_92 BL48
XVDD_93 BK47
XVDD_94 BJ46
XVDD_95 BT54
XVDD_96 BR53
XVDD_97 BP52
XVDD_98 BN51
XVDD_99 BM50
XVDD_100 BL49
XVDD_101 BJ47
XVDD_102 BH46
XVDD_103 BG45
XVDD_104 BF44
1V8
XVDD_105 BT55
XVDD_106 BR54
XVDD_107 BP53
XVDD_108 BN52
XVDD_109 BL50
XVDD_110 BK49
XVDD_111 BJ48
XVDD_112 BH47
XVDD_113 BG46
XVDD_114 BR55
XVDD_115 BP54
XVDD_116 BN53
XVDD_117 BM52
XVDD_118 BL51
XVDD_119 BK50
XVDD_120 BJ49
XVDD_121 BG47
XVDD_122 BF46
XVDD_123 BR56
XVDD_124 BP55
XVDD_125 BN54
XVDD_126 BM53
XVDD_127 BK51
XVDD_128 BJ50
XVDD_129 BH49
XVDD_130 BG48
XVDD_131 BF47
XVDD_132 BP56
XVDD_133 BN55
XVDD_134 BM54
XVDD_135 BL53
XVDD_136 BK52
XVDD_137 BJ51
XVDD_138 BF48
XVDD_139 BE47
XVDD_140 BD46

GPU XVDD BALLS (NC IN SUBSTRATE):

CAN CONNECT TO ANY POWER NET (NV/MS/1V8/PEX, etc.) ON SYSTEM BOARD,
PROVIDE FLEXIBILITY TO OPTIMIZE POWER CHANNELS ON SYSTEM BOARD,
ESPECIALLY USEFUL FOR LOW-COST DESIGN WITH REDUCED PCB LAYERS.

ASSEMBLY <ASSEMBLY_DESCRIPTION>
PAGE DETAIL GPU XVDD

ALL NVIDIA DESIGN SPECIFICATIONS, REFERENCE SPECIFICATIONS, REFERENCE BOARDS, FILES, DRAWINGS, DIAGNOSTICS, LISTS AND OTHER DOCUMENTS OR INFORMATION (TOGETHER AND SEPARATELY, 'MATERIALS') ARE BEING PROVIDED 'AS IS'. THE MATERIALS MAY CONTAIN KNOWN AND UNKNOWN VIOLATIONS OR DEVIATIONS OF INDUSTRY STANDARDS AND SPECIFICATIONS. NVIDIA MAKES NO WARRANTIES, EXPRESSED, IMPLIED, STATUTORY OR OTHERWISE WITH RESPECT TO THE MATERIALS OR OTHERWISE, AND EXPRESSLY DISCLAIMS ALL IMPLIED WARRANTIES INCLUDING, WITHOUT LIMITATION, THE WARRANTIES OF DESIGN, OF NONINFRINGEMENT, MERCHANTABILITY OR FITNESS FOR A PARTICULAR PURPOSE, OR ARISING FROM A COURSE OF DEALING, TRADE USAGE, TRADE PRACTICE, OR INDUSTRY STANDARDS.

GIGABYTE

Title	PCIE	
Size Custom	Document Number GV-N3060VISION OC-12GD	Rev 1.01
Date: Thursday, January 14, 2021	Sheet 17 of 54	

Page18: GPU DECOUPLING FBVDDQ

FBVDDQ

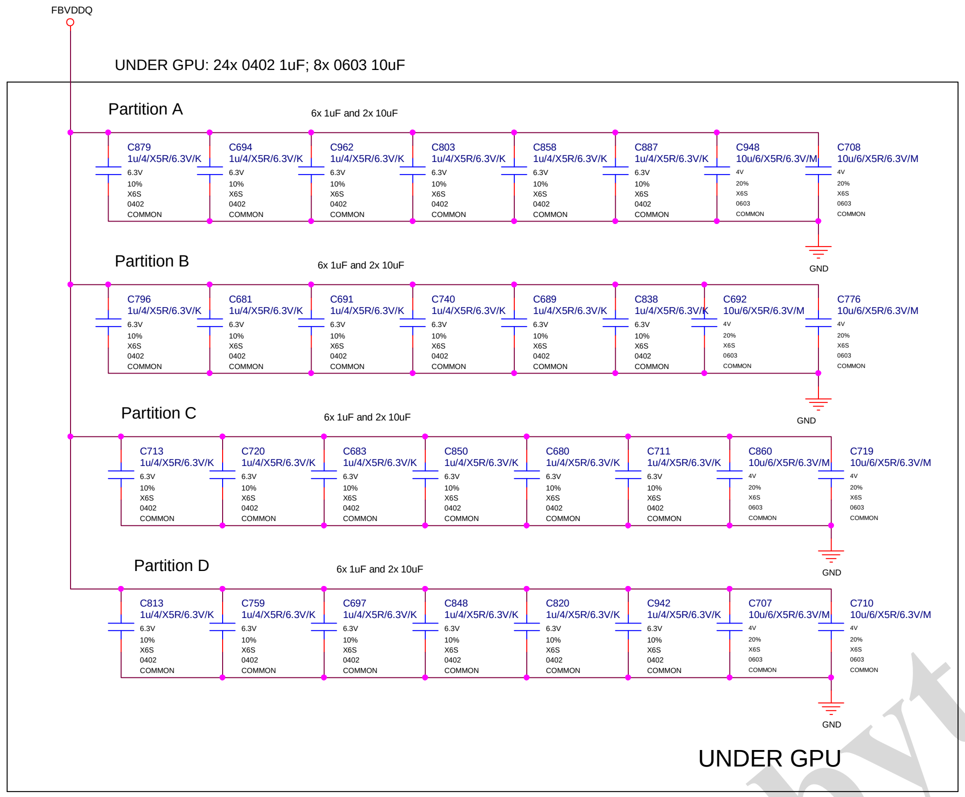
FBVDDQ
UNDER GPU: 24x 0402 1uF; 8x 0603 10uF
Partition A
6x 1uF and 2x 10uF
C879 1u/4/X5R/6.3V/K 6.3V 10% X6S 0402 COMMON
C694 1u/4/X5R/6.3V/K 6.3V 10% X6S 0402 COMMON
C962 1u/4/X5R/6.3V/K 6.3V 10% X6S 0402 COMMON
C803 1u/4/X5R/6.3V/K 6.3V 10% X6S 0402 COMMON
C858 1u/4/X5R/6.3V/K 6.3V 10% X6S 0402 COMMON
C887 1u/4/X5R/6.3V/K 6.3V 10% X6S 0402 COMMON
C948 10u/6/X5R/6.3V/M 4V 20% X6S 0603 COMMON
C708 10u/6/X5R/6.3V/M 4V 20% X6S 0603 COMMON
GND
Partition B
6x 1uF and 2x 10uF
C796 1u/4/X5R/6.3V/K 6.3V 10% X6S 0402 COMMON
C681 1u/4/X5R/6.3V/K 6.3V 10% X6S 0402 COMMON
C691 1u/4/X5R/6.3V/K 6.3V 10% X6S 0402 COMMON
C740 1u/4/X5R/6.3V/K 6.3V 10% X6S 0402 COMMON
C689 1u/4/X5R/6.3V/K 6.3V 10% X6S 0402 COMMON
C838 1u/4/X5R/6.3V/K 6.3V 10% X6S 0402 COMMON
C692 10u/6/X5R/6.3V/M 4V 20% X6S 0603 COMMON
C776 10u/6/X5R/6.3V/M 4V 20% X6S 0603 COMMON
GND
Partition C
6x 1uF and 2x 10uF
C713 1u/4/X5R/6.3V/K 6.3V 10% X6S 0402 COMMON
C720 1u/4/X5R/6.3V/K 6.3V 10% X6S 0402 COMMON
C683 1u/4/X5R/6.3V/K 6.3V 10% X6S 0402 COMMON
C850 1u/4/X5R/6.3V/K 6.3V 10% X6S 0402 COMMON
C680 1u/4/X5R/6.3V/K 6.3V 10% X6S 0402 COMMON
C711 1u/4/X5R/6.3V/K 6.3V 10% X6S 0402 COMMON
C860 10u/6/X5R/6.3V/M 4V 20% X6S 0603 COMMON
C719 10u/6/X5R/6.3V/M 4V 20% X6S 0603 COMMON
GND
Partition D
6x 1uF and 2x 10uF
C813 1u/4/X5R/6.3V/K 6.3V 10% X6S 0402 COMMON
C759 1u/4/X5R/6.3V/K 6.3V 10% X6S 0402 COMMON
C697 1u/4/X5R/6.3V/K 6.3V 10% X6S 0402 COMMON
C848 1u/4/X5R/6.3V/K 6.3V 10% X6S 0402 COMMON
C820 1u/4/X5R/6.3V/K 6.3V 10% X6S 0402 COMMON
C942 1u/4/X5R/6.3V/K 6.3V 10% X6S 0402 COMMON
C707 10u/6/X5R/6.3V/M 4V 20% X6S 0603 COMMON
C710 10u/6/X5R/6.3V/M 4V 20% X6S 0603 COMMON
GND
UNDER GPU

FBVDDQ

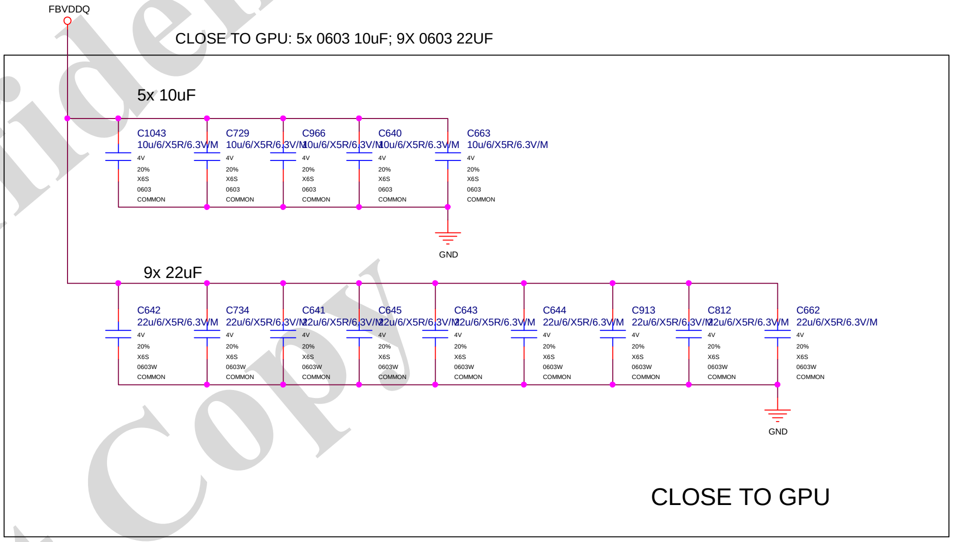
FBVDDQ
CLOSE TO GPU: 5x 0603 10uF; 9X 0603 22UF
5x 10uF
C1043 10u/6/X5R/6.3V/M 4V 20% X6S 0603 COMMON
C729 10u/6/X5R/6.3V/M 4V 20% X6S 0603 COMMON
C966 10u/6/X5R/6.3V/M 4V 20% X6S 0603 COMMON
C640 10u/6/X5R/6.3V/M 4V 20% X6S 0603 COMMON
C663 10u/6/X5R/6.3V/M 4V 20% X6S 0603 COMMON
GND
9x 22uF
C642 22u/6/X5R/6.3V/M 4V 20% X6S 0603W COMMON
C734 22u/6/X5R/6.3V/M 4V 20% X6S 0603W COMMON
C641 22u/6/X5R/6.3V/M 4V 20% X6S 0603W COMMON
C645 22u/6/X5R/6.3V/M 4V 20% X6S 0603W COMMON
C643 22u/6/X5R/6.3V/M 4V 20% X6S 0603W COMMON
C644 22u/6/X5R/6.3V/M 4V 20% X6S 0603W COMMON
C913 22u/6/X5R/6.3V/M 4V 20% X6S 0603W COMMON
C812 22u/6/X5R/6.3V/M 4V 20% X6S 0603W COMMON
C662 22u/6/X5R/6.3V/M 4V 20% X6S 0603W COMMON
GND
CLOSE TO GPU

ASSEMBLY <ASSEMBLY_DESCRIPTION>
PAGE DETAIL GPU DECOUPLING FBVDDQ

ALL NVIDIA DESIGN SPECIFICATIONS, REFERENCE SPECIFICATIONS, REFERENCE BOARDS, FILES, DRAWINGS, DIAGNOSTICS, LISTS AND OTHER DOCUMENTS OR INFORMATION (TOGETHER AND SEPARATELY, 'MATERIALS') ARE BEING PROVIDED 'AS IS'. THE MATERIALS MAY CONTAIN KNOWN AND UNKNOWN VIOLATIONS OR DEVIATIONS OF INDUSTRY STANDARDS AND SPECIFICATIONS. NVIDIA MAKES NO WARRANTIES, EXPRESSED, IMPLIED, STATUTORY OR OTHERWISE WITH RESPECT TO THE MATERIALS OR OTHERWISE, AND EXPRESSLY DISCLAIMS ALL IMPLIED WARRANTIES INCLUDING, WITHOUT LIMITATION, THE WARRANTIES OF DESIGN, OF NONINFRINGEMENT, MERCHANTABILITY OR FITNESS FOR A PARTICULAR PURPOSE, OR ARISING FROM A COURSE OF DEALING, TRADE USAGE, TRADE PRACTICE, OR INDUSTRY STANDARDS.

GIGABYTE

Title
PCIE

Size	Document Number	Rev
Custom	GV-N3060VISION OC-12GD	1.01

Date: Thursday, January 14, 2021 Sheet 18 of 54

Page19: GPU DECOUPLING NVVDD

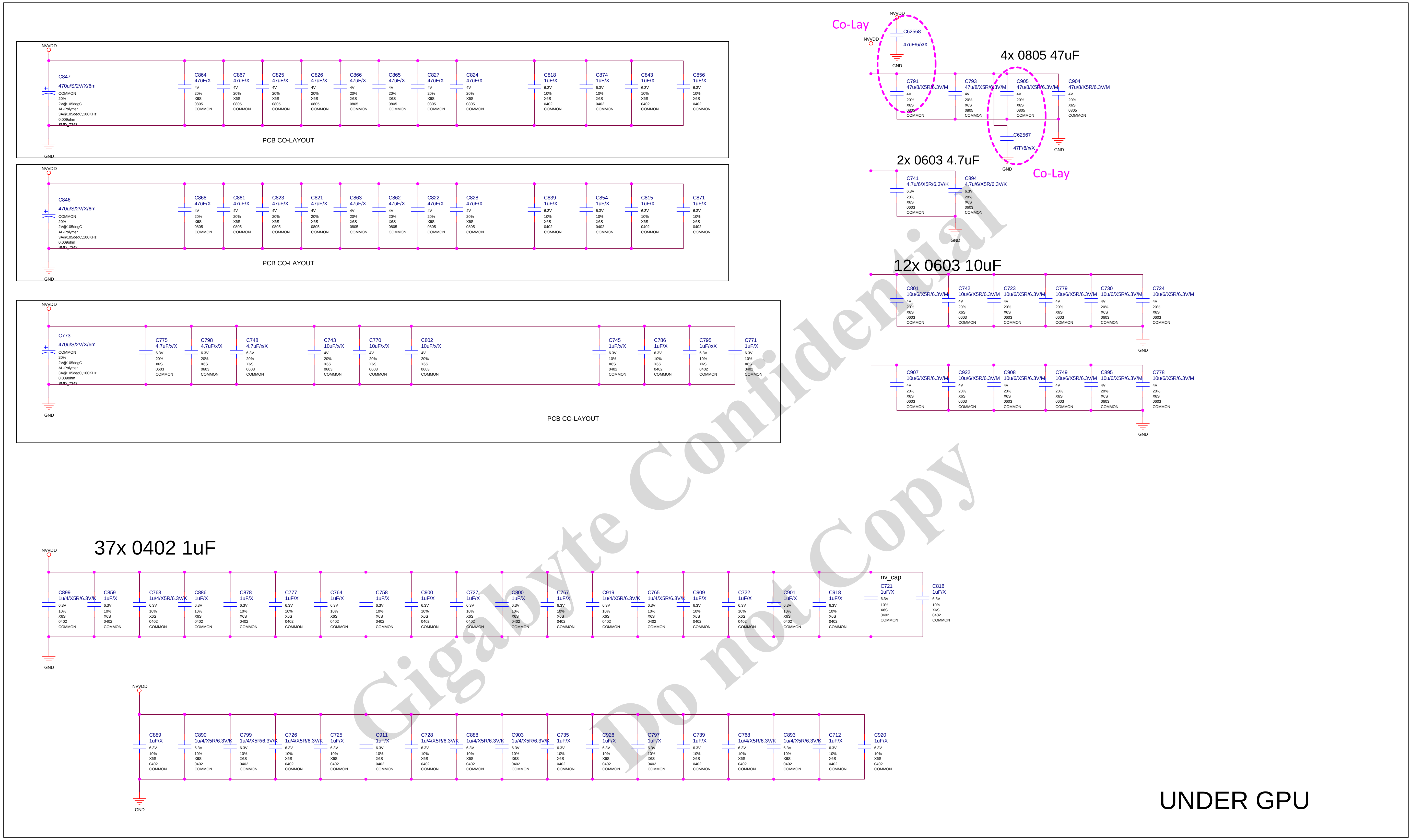
NVVDD
C847 470u/S/2V/X/6m COMMON 20% 2V@105degC AL-Polymer 3A@105degC,100KHz 0.009ohm SMD_7343
C864 47uF/X 4V 20% X6S 0805 COMMON
C867 47uF/X 4V 20% X6S 0805 COMMON
C825 47uF/X 4V 20% X6S 0805 COMMON
C826 47uF/X 4V 20% X6S 0805 COMMON
C866 47uF/X 4V 20% X6S 0805 COMMON
C865 47uF/X 4V 20% X6S 0805 COMMON
C827 47uF/X 4V 20% X6S 0805 COMMON
C824 47uF/X 4V 20% X6S 0805 COMMON
C818 1uF/X 6.3V 10% X6S 0402 COMMON
C874 1uF/X 6.3V 10% X6S 0402 COMMON
C843 1uF/X 6.3V 10% X6S 0402 COMMON
C856 1uF/X 6.3V 10% X6S 0402 COMMON
GND
PCB CO-LAYOUT
NVVDD
C846 470u/S/2V/X/6m COMMON 20% 2V@105degC AL-Polymer 3A@105degC,100KHz 0.009ohm SMD_7343
C868 47uF/X 4V 20% X6S 0805 COMMON
C861 47uF/X 4V 20% X6S 0805 COMMON
C823 47uF/X 4V 20% X6S 0805 COMMON
C821 47uF/X 4V 20% X6S 0805 COMMON
C863 47uF/X 4V 20% X6S 0805 COMMON
C862 47uF/X 4V 20% X6S 0805 COMMON
C822 47uF/X 4V 20% X6S 0805 COMMON
C828 47uF/X 4V 20% X6S 0805 COMMON
C839 1uF/X 6.3V 10% X6S 0402 COMMON
C854 1uF/X 6.3V 10% X6S 0402 COMMON
C815 1uF/X 6.3V 10% X6S 0402 COMMON
C871 1uF/X 6.3V 10% X6S 0402 COMMON
GND
PCB CO-LAYOUT
NVVDD
C773 470u/S/2V/X/6m COMMON 20% 2V@105degC AL-Polymer 3A@105degC,100KHz 0.009ohm SMD_7343
C775 4.7uF/x/X 6.3V 20% X6S 0603 COMMON
C798 4.7uF/x/X 6.3V 20% X6S 0603 COMMON
C748 4.7uF/x/X 6.3V 20% X6S 0603 COMMON
C743 10uF/x/X 4V 20% X6S 0603 COMMON
C770 10uF/x/X 4V 20% X6S 0603 COMMON
C802 10uF/x/X 4V 20% X6S 0603 COMMON
C745 1uF/x/X 6.3V 10% X6S 0402 COMMON
C786 1uF/X 6.3V 10% X6S 0402 COMMON
C795 1uF/x/X 6.3V 10% X6S 0402 COMMON
C771 1uF/X 6.3V 10% X6S 0402 COMMON
GND
PCB CO-LAYOUT
Co-Lay
NVVDD
C62568 47uF/6/x/X
GND
NVVDD
4x 0805 47uF
C791 47u/8/X5R/6.3V/M 4V 20% X6S 0805 COMMON
C793 47u/8/X5R/6.3V/M 4V 20% X6S 0805 COMMON
C905 47u/8/X5R/6.3V/M 4V 20% X6S 0805 COMMON
C904 47u/8/X5R/6.3V/M 4V 20% X6S 0805 COMMON
C62567 47F/6/x/X
GND
GND
Co-Lay
2x 0603 4.7uF
C741 4.7u/6/X5R/6.3V/K 6.3V 20% X6S 0603 COMMON
C894 4.7u/6/X5R/6.3V/K 6.3V 20% X6S 0603 COMMON
GND
12x 0603 10uF
C801 10u/6/X5R/6.3V/M 4V 20% X6S 0603 COMMON
C742 10u/6/X5R/6.3V/M 4V 20% X6S 0603 COMMON
C723 10u/6/X5R/6.3V/M 4V 20% X6S 0603 COMMON
C779 10u/6/X5R/6.3V/M 4V 20% X6S 0603 COMMON
C730 10u/6/X5R/6.3V/M 4V 20% X6S 0603 COMMON
C724 10u/6/X5R/6.3V/M 4V 20% X6S 0603 COMMON
GND
C907 10u/6/X5R/6.3V/M 4V 20% X6S 0603 COMMON
C922 10u/6/X5R/6.3V/M 4V 20% X6S 0603 COMMON
C908 10u/6/X5R/6.3V/M 4V 20% X6S 0603 COMMON
C749 10u/6/X5R/6.3V/M 4V 20% X6S 0603 COMMON
C895 10u/6/X5R/6.3V/M 4V 20% X6S 0603 COMMON
C778 10u/6/X5R/6.3V/M 4V 20% X6S 0603 COMMON
GND
NVVDD
37x 0402 1uF
C899 1u/4/X5R/6.3V/K 6.3V 10% X6S 0402 COMMON
C859 1uF/X 6.3V 10% X6S 0402 COMMON
C763 1u/4/X5R/6.3V/K 6.3V 10% X6S 0402 COMMON
C886 1uF/X 6.3V 10% X6S 0402 COMMON
C878 1uF/X 6.3V 10% X6S 0402 COMMON
C777 1uF/X 6.3V 10% X6S 0402 COMMON
C764 1uF/X 6.3V 10% X6S 0402 COMMON
C758 1uF/X 6.3V 10% X6S 0402 COMMON
C900 1uF/X 6.3V 10% X6S 0402 COMMON
C727 1uF/X 6.3V 10% X6S 0402 COMMON
C800 1uF/X 6.3V 10% X6S 0402 COMMON
C767 1uF/X 6.3V 10% X6S 0402 COMMON
C919 1u/4/X5R/6.3V/K 6.3V 10% X6S 0402 COMMON
C765 1u/4/X5R/6.3V/K 6.3V 10% X6S 0402 COMMON
C909 1uF/X 6.3V 10% X6S 0402 COMMON
C722 1uF/X 6.3V 10% X6S 0402 COMMON
C901 1uF/X 6.3V 10% X6S 0402 COMMON
C918 1uF/X 6.3V 10% X6S 0402 COMMON
nv_cap
C721 1uF/X 6.3V 10% X6S 0402 COMMON
C816 1uF/X 6.3V 10% X6S 0402 COMMON
GND
NVVDD
C889 1uF/X 6.3V 10% X6S 0402 COMMON
C890 1u/4/X5R/6.3V/K 6.3V 10% X6S 0402 COMMON
C799 1u/4/X5R/6.3V/K 6.3V 10% X6S 0402 COMMON
C726 1u/4/X5R/6.3V/K 6.3V 10% X6S 0402 COMMON
C725 1uF/X 6.3V 10% X6S 0402 COMMON
C911 1uF/X 6.3V 10% X6S 0402 COMMON
C728 1u/4/X5R/6.3V/K 6.3V 10% X6S 0402 COMMON
C888 1u/4/X5R/6.3V/K 6.3V 10% X6S 0402 COMMON
C903 1u/4/X5R/6.3V/K 6.3V 10% X6S 0402 COMMON
C735 1uF/X 6.3V 10% X6S 0402 COMMON
C926 1uF/X 6.3V 10% X6S 0402 COMMON
C797 1uF/X 6.3V 10% X6S 0402 COMMON
C739 1uF/X 6.3V 10% X6S 0402 COMMON
C768 1u/4/X5R/6.3V/K 6.3V 10% X6S 0402 COMMON
C893 1u/4/X5R/6.3V/K 6.3V 10% X6S 0402 COMMON
C712 1uF/X 6.3V 10% X6S 0402 COMMON
C920 1uF/X 6.3V 10% X6S 0402 COMMON
GND
UNDER GPU

ASSEMBLY
PAGE DETAIL

<ASSEMBLY_DESCRIPTION>
GPU DECOUPLING NVVDD

ALL NVIDIA DESIGN SPECIFICATIONS, REFERENCE SPECIFICATIONS, REFERENCE BOARDS, FILES, DRAWINGS, DIAGNOSTICS, LISTS AND OTHER DOCUMENTS OR INFORMATION (TOGETHER AND SEPARATELY, 'MATERIALS') ARE BEING PROVIDED 'AS IS'. THE MATERIALS MAY CONTAIN KNOWN AND UNKNOWN VIOLATIONS OR DEVIATIONS OF INDUSTRY STANDARDS AND SPECIFICATIONS. NVIDIA MAKES NO WARRANTIES, EXPRESSED, IMPLIED, STATUTORY OR OTHERWISE WITH RESPECT TO THE MATERIALS OR OTHERWISE, AND EXPRESSLY DISCLAIMS ALL IMPLIED WARRANTIES INCLUDING, WITHOUT LIMITATION, THE WARRANTIES OF DESIGN, OF NONINFRINGEMENT, MERCHANTABILITY OR FITNESS FOR A PARTICULAR PURPOSE, OR ARISING FROM A COURSE OF DEALING, TRADE USAGE, TRADE PRACTICE, OR INDUSTRY STANDARDS.

GIGABYTE
Title PCIE
Size Custom
Document Number GV-N3060VISION OC-12GD
Rev 1.01
Date: Thursday, January 14, 2021
Sheet 19 of 54

Page20: GPU DECOUPLING NVVDD 2

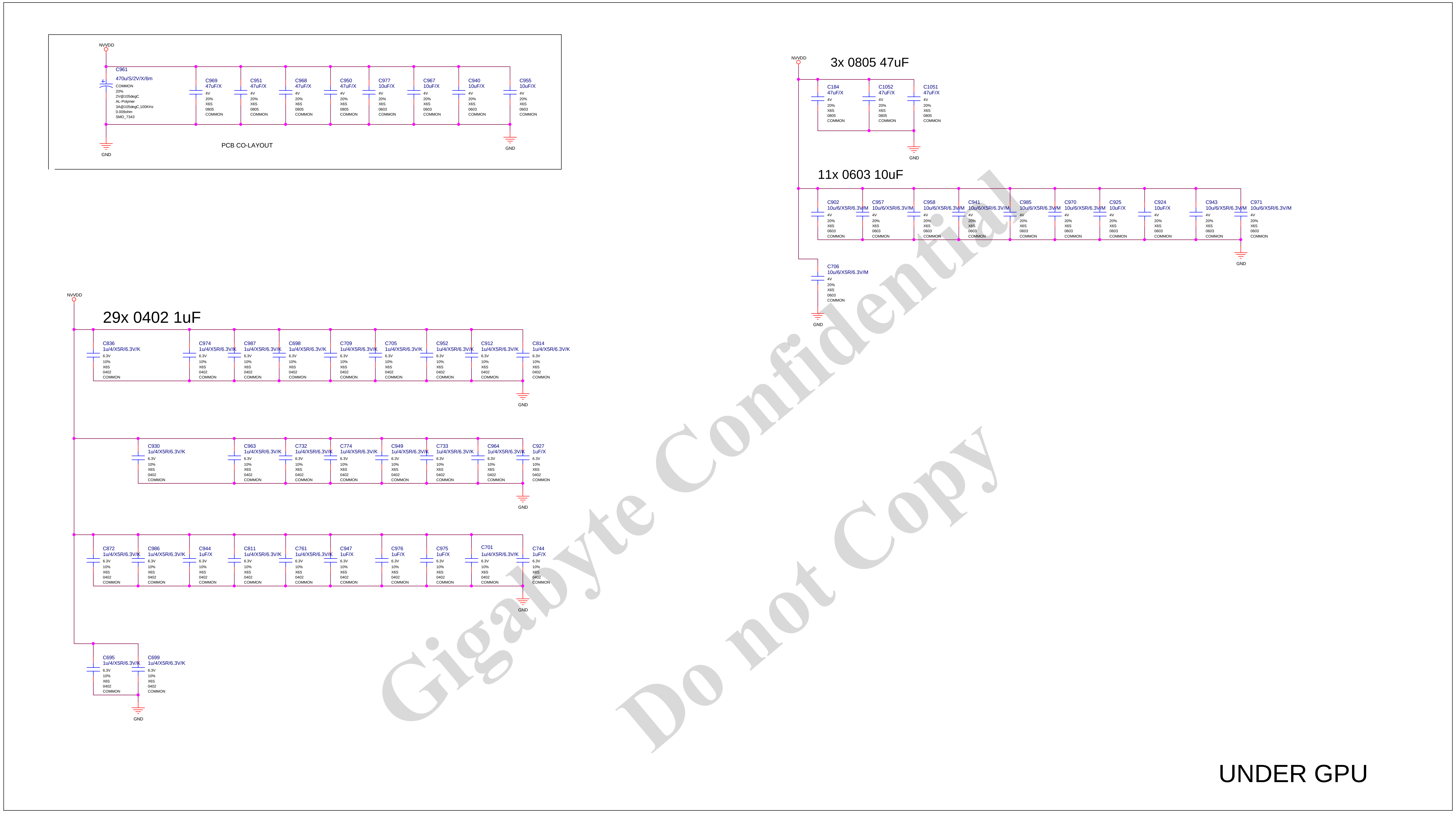
NVVDD
C961
470u/S/2V/X/6m
COMMON
20%
2V@105degC
AL-Polymer
3A@105degC,100KHz
0.009ohm
SMD_7343
C969
47uF/X
4V
20%
X6S
0805
COMMON
C951
47uF/X
4V
20%
X6S
0805
COMMON
C968
47uF/X
4V
20%
X6S
0805
COMMON
C950
47uF/X
4V
20%
X6S
0805
COMMON
C977
10uF/X
4V
20%
X6S
0603
COMMON
C967
10uF/X
4V
20%
X6S
0603
COMMON
C940
10uF/X
4V
20%
X6S
0603
COMMON
C955
10uF/X
4V
20%
X6S
0603
COMMON
GND
GND
PCB CO-LAYOUT
NVVDD
3x 0805 47uF
C184
47uF/X
4V
20%
X6S
0805
COMMON
C1052
47uF/X
4V
20%
X6S
0805
COMMON
C1051
47uF/X
4V
20%
X6S
0805
COMMON
GND
11x 0603 10uF
C902
10u/6/X5R/6.3V/M
4V
20%
X6S
0603
COMMON
C957
10u/6/X5R/6.3V/M
4V
20%
X6S
0603
COMMON
C958
10u/6/X5R/6.3V/M
4V
20%
X6S
0603
COMMON
C941
10u/6/X5R/6.3V/M
4V
20%
X6S
0603
COMMON
C985
10u/6/X5R/6.3V/M
4V
20%
X6S
0603
COMMON
C970
10u/6/X5R/6.3V/M
4V
20%
X6S
0603
COMMON
C925
10uF/X
4V
20%
X6S
0603
COMMON
C924
10uF/X
4V
20%
X6S
0603
COMMON
C943
10u/6/X5R/6.3V/M
4V
20%
X6S
0603
COMMON
C971
10u/6/X5R/6.3V/M
4V
20%
X6S
0603
COMMON
GND
C706
10u/6/X5R/6.3V/M
4V
20%
X6S
0603
COMMON
GND
NVVDD
29x 0402 1uF
C836
1u/4/X5R/6.3V/K
6.3V
10%
X6S
0402
COMMON
C974
1u/4/X5R/6.3V/K
6.3V
10%
X6S
0402
COMMON
C987
1u/4/X5R/6.3V/K
6.3V
10%
X6S
0402
COMMON
C698
1u/4/X5R/6.3V/K
6.3V
10%
X6S
0402
COMMON
C709
1u/4/X5R/6.3V/K
6.3V
10%
X6S
0402
COMMON
C705
1u/4/X5R/6.3V/K
6.3V
10%
X6S
0402
COMMON
C952
1u/4/X5R/6.3V/K
6.3V
10%
X6S
0402
COMMON
C912
1u/4/X5R/6.3V/K
6.3V
10%
X6S
0402
COMMON
C814
1u/4/X5R/6.3V/K
6.3V
10%
X6S
0402
COMMON
GND
C930
1u/4/X5R/6.3V/K
6.3V
10%
X6S
0402
COMMON
C963
1u/4/X5R/6.3V/K
6.3V
10%
X6S
0402
COMMON
C732
1u/4/X5R/6.3V/K
6.3V
10%
X6S
0402
COMMON
C774
1u/4/X5R/6.3V/K
6.3V
10%
X6S
0402
COMMON
C949
1u/4/X5R/6.3V/K
6.3V
10%
X6S
0402
COMMON
C733
1u/4/X5R/6.3V/K
6.3V
10%
X6S
0402
COMMON
C964
1u/4/X5R/6.3V/K
6.3V
10%
X6S
0402
COMMON
C927
1uF/X
6.3V
10%
X6S
0402
COMMON
GND
C872
1u/4/X5R/6.3V/K
6.3V
10%
X6S
0402
COMMON
C986
1u/4/X5R/6.3V/K
6.3V
10%
X6S
0402
COMMON
C944
1uF/X
6.3V
10%
X6S
0402
COMMON
C811
1u/4/X5R/6.3V/K
6.3V
10%
X6S
0402
COMMON
C761
1u/4/X5R/6.3V/K
6.3V
10%
X6S
0402
COMMON
C947
1uF/X
6.3V
10%
X6S
0402
COMMON
C976
1uF/X
6.3V
10%
X6S
0402
COMMON
C975
1uF/X
6.3V
10%
X6S
0402
COMMON
C701
1u/4/X5R/6.3V/K
6.3V
10%
X6S
0402
COMMON
C744
1uF/X
6.3V
10%
X6S
0402
COMMON
GND
C695
1u/4/X5R/6.3V/K
6.3V
10%
X6S
0402
COMMON
C699
1u/4/X5R/6.3V/K
6.3V
10%
X6S
0402
COMMON
GND
UNDER GPU

ASSEMBLY
PAGE DETAIL

<ASSEMBLY_DESCRIPTION>
GPU DECOUPLING NVVDD 2

ALL NVIDIA DESIGN SPECIFICATIONS, REFERENCE SPECIFICATIONS, REFERENCE BOARDS, FILES, DRAWINGS, DIAGNOSTICS, LISTS AND OTHER DOCUMENTS OR INFORMATION (TOGETHER AND SEPARATELY, 'MATERIALS') ARE BEING PROVIDED 'AS IS'. THE MATERIALS MAY CONTAIN KNOWN AND UNKNOWN VIOLATIONS OR DEVIATIONS OF INDUSTRY STANDARDS AND SPECIFICATIONS. NVIDIA MAKES NO WARRANTIES, EXPRESSED, IMPLIED, STATUTORY OR OTHERWISE WITH RESPECT TO THE MATERIALS OR OTHERWISE, AND EXPRESSLY DISCLAIMS ALL IMPLIED WARRANTIES INCLUDING, WITHOUT LIMITATION, THE WARRANTIES OF DESIGN, OF NONINFRINGEMENT, MERCHANTABILITY OR FITNESS FOR A PARTICULAR PURPOSE, OR ARISING FROM A COURSE OF DEALING, TRADE USAGE, TRADE PRACTICE, OR INDUSTRY STANDARDS.

GIGABYTE

Title PCIE		
Size Custom	Document Number GV-N3060VISION OC-12GD	Rev 1.01
Date: Thursday, January 14, 2021	Sheet 20 of 54	

Page21: IFPAB DVI-D-DL

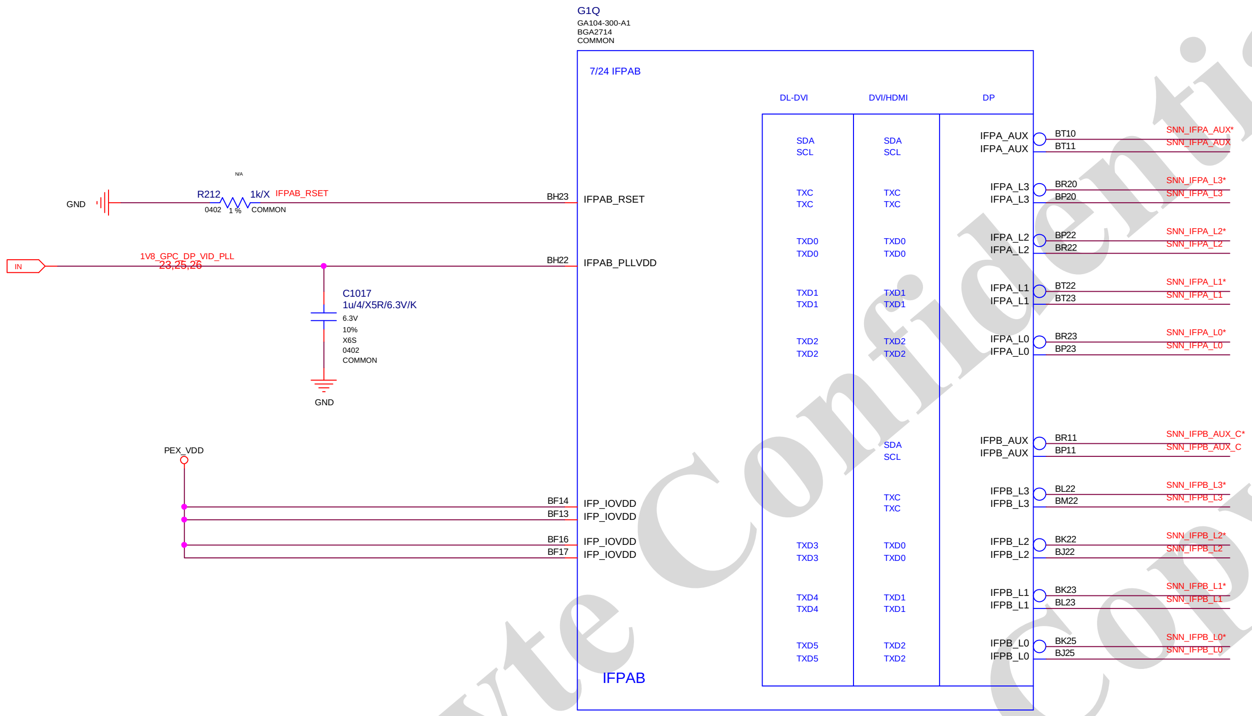
G1Q
GA104-300-A1
BGA2714
COMMON
7/24 IFPAB
N/A
GND
R212
1k/X
0402
1 %
COMMON
IFPAB_RSET
BH23
IFPAB_RSET
IN
1V8_GPC_DP_VID_PLL
23,25,26
BH22
IFPAB_PLLVDD
C1017
1u/4/X5R/6.3V/K
6.3V
10%
X6S
0402
COMMON
GND
PEX_VDD
BF14
IFP_IOVDD
BF13
IFP_IOVDD
BF16
IFP_IOVDD
BF17
IFP_IOVDD
IFPAB
DL-DVI
DVI/HDMI
DP
SDA
SCL
TXC
TXC
TXD0
TXD0
TXD1
TXD1
TXD2
TXD2
TXD3
TXD3
TXD4
TXD4
TXD5
TXD5
SDA
SCL
TXC
TXC
TXD0
TXD0
TXD1
TXD1
TXD2
TXD2
SDA
SCL
TXC
TXC
TXD0
TXD0
TXD1
TXD1
TXD2
TXD2
IFPA_AUX
IFPA_AUX
BT10
BT11
SNN_IFPA_AUX*
SNN_IFPA_AUX
IFPA_L3
IFPA_L3
BR20
BP20
SNN_IFPA_L3*
SNN_IFPA_L3
IFPA_L2
IFPA_L2
BP22
BR22
SNN_IFPA_L2*
SNN_IFPA_L2
IFPA_L1
IFPA_L1
BT22
BT23
SNN_IFPA_L1*
SNN_IFPA_L1
IFPA_L0
IFPA_L0
BR23
BP23
SNN_IFPA_L0*
SNN_IFPA_L0
IFPB_AUX
IFPB_AUX
BR11
BP11
SNN_IFPB_AUX_C*
SNN_IFPB_AUX_C
IFPB_L3
IFPB_L3
BL22
BM22
SNN_IFPB_L3*
SNN_IFPB_L3
IFPB_L2
IFPB_L2
BK22
BJ22
SNN_IFPB_L2*
SNN_IFPB_L2
IFPB_L1
IFPB_L1
BK23
BL23
SNN_IFPB_L1*
SNN_IFPB_L1
IFPB_L0
IFPB_L0
BK25
BJ25
SNN_IFPB_L0*
SNN_IFPB_L0

ASSEMBLY <ASSEMBLY_DESCRIPTION>
PAGE DETAIL IFPAB DVI-D-DL

ALL NVIDIA DESIGN SPECIFICATIONS, REFERENCE SPECIFICATIONS, REFERENCE BOARDS, FILES, DRAWINGS, DIAGNOSTICS, LISTS AND OTHER DOCUMENTS OR INFORMATION (TOGETHER AND SEPARATELY, 'MATERIALS') ARE BEING PROVIDED 'AS IS'. THE MATERIALS MAY CONTAIN KNOWN AND UNKNOWN VIOLATIONS OR DEVIATIONS OF INDUSTRY STANDARDS AND SPECIFICATIONS. NVIDIA MAKES NO WARRANTIES, EXPRESSED, IMPLIED, STATUTORY OR OTHERWISE WITH RESPECT TO THE MATERIALS OR OTHERWISE, AND EXPRESSLY DISCLAIMS ALL IMPLIED WARRANTIES INCLUDING, WITHOUT LIMITATION, THE WARRANTIES OF DESIGN, OF NONINFRINGEMENT, MERCHANTABILITY OR FITNESS FOR A PARTICULAR PURPOSE, OR ARISING FROM A COURSE OF DEALING, TRADE USAGE, TRADE PRACTICE, OR INDUSTRY STANDARDS.

GIGABYTE

Title: PCIE
Size: Custom
Document Number: GV-N3060VISION OC-12GD
Rev: 1.01
Date: Thursday, January 14, 2021

Page22: IFPF DP

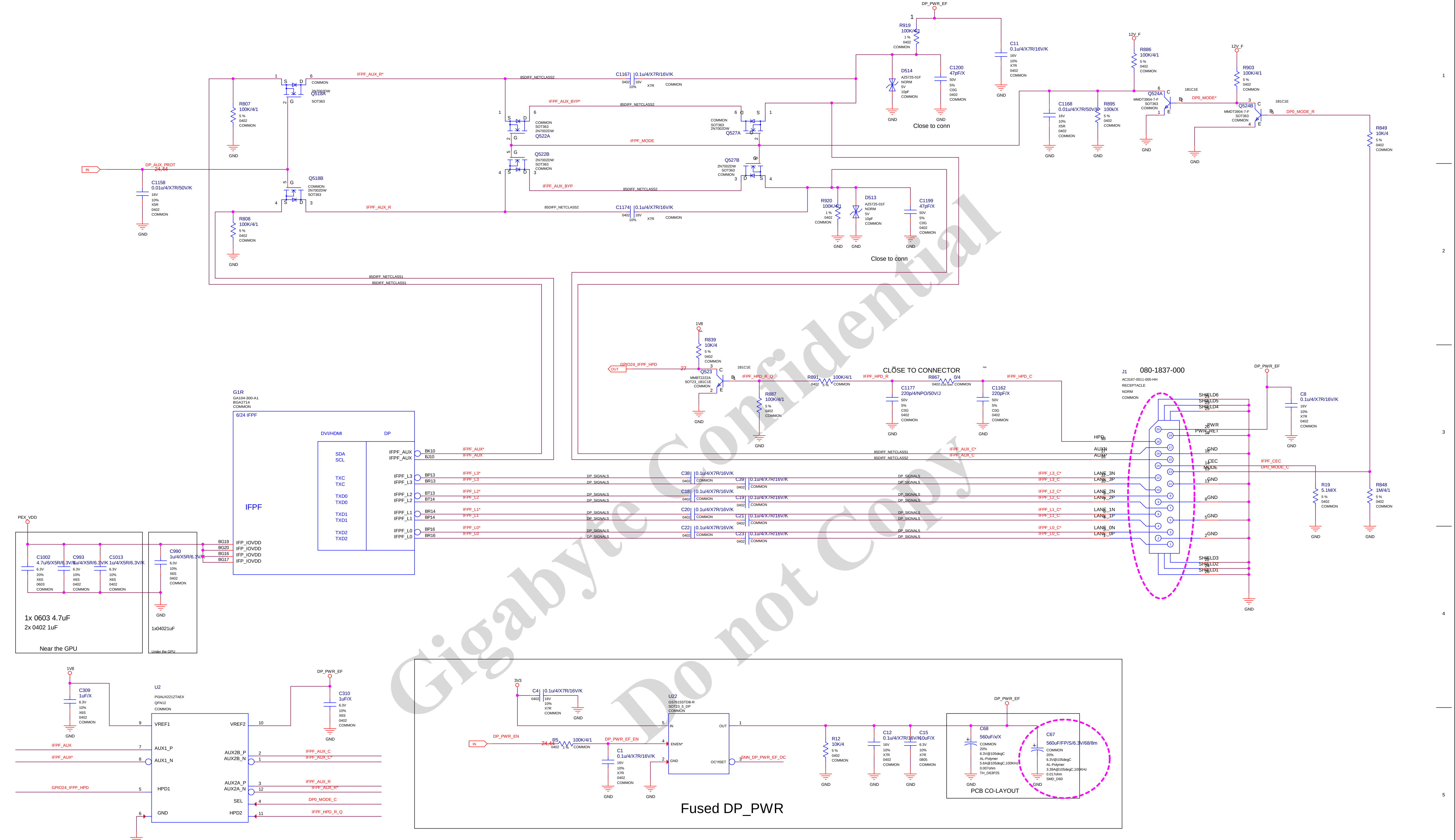
DP_PWR_EF
R919 100K/4/1
C11 0.1u/4/X7R/16V/K
C1200 47pF/X
D514 AZ5725-01F
Close to conn
12V_F
R886 100K/4/1
R903 100K/4/1
Q524A MMDT3904-7-F
Q524B MMDT3904-7-F
C1168 0.01u/4/X7R/50V/K
R895 100K/X
DP0_MODE*
DP0_MODE_R
R849 10K/4
IFPF_AUX_R*
Q518A 2N7002DW
R807 100K/4/1
DP_AUX_PROT
C1158 0.01u/4/X7R/50V/K
Q518B 2N7002DW
R808 100K/4/1
IFPF_AUX_R
C1167 0.1u/4/X7R/16V/K
C1174 0.1u/4/X7R/16V/K
IFPF_AUX_BYP*
IFPF_AUX_BYP
IFPF_MODE
Q522A 2N7002DW
Q522B 2N7002DW
Q527A 2N7002DW
Q527B 2N7002DW
R920 100K/4/1
D513 AZ5725-01F
C1199 47pF/X
Close to conn
85DIFF_NETCLASS1
85DIFF_NETCLASS2
1V8
R839 10K/4
GPIO24_IFPF_HPD
Q523 MMBT2222A
IFPF_HPD_R_Q
R887 100K/4/1
CLOSE TO CONNECTOR
R891 100K/4/1
IFPF_HPD_R
R867 0/4
IFPF_HPD_C
C1177 220p/4/NPO/50V/J
C1162 220pF/X
J1 080-1837-000
AC3167-0011-005-HH RECEPTACLE
DP_PWR_EF
C8 0.1u/4/X7R/16V/K
G1R GA104-300-A1 BGA2714
6/24 IFPF
DVI/HDMI
DP
IFPF
SDA SCL
TXC TXC
TXD0 TXD0
TXD1 TXD1
TXD2 TXD2
IFPF_AUX IFPF_AUX
IFPF_L3 IFPF_L3
IFPF_L2 IFPF_L2
IFPF_L1 IFPF_L1
IFPF_L0 IFPF_L0
IFP_IOVDD
BK10 BJ10 BP13 BR13 BT13 BT14 BR14 BP14 BP16 BR16
BG19 BG20 BG16 BG17
IFPF_AUX* IFPF_AUX
IFPF_L3* IFPF_L3
IFPF_L2* IFPF_L2
IFPF_L1* IFPF_L1
IFPF_L0* IFPF_L0
DP_SIGNALS
C38 0.1u/4/X7R/16V/K
C39 0.1u/4/X7R/16V/K
C18 0.1u/4/X7R/16V/K
C19 0.1u/4/X7R/16V/K
C20 0.1u/4/X7R/16V/K
C21 0.1u/4/X7R/16V/K
C22 0.1u/4/X7R/16V/K
C23 0.1u/4/X7R/16V/K
IFPF_AUX_C* IFPF_AUX_C
IFPF_L3_C* IFPF_L3_C
IFPF_L2_C* IFPF_L2_C
IFPF_L1_C* IFPF_L1_C
IFPF_L0_C* IFPF_L0_C
HPD AUXN AUXP
LANE_3N LANE_3P LANE_2N LANE_2P LANE_1N LANE_1P LANE_0N LANE_0P
SHIELD6 SHIELD5 SHIELD4 SHIELD3 SHIELD2 SHIELD1
PWR PWR_RET GND CEC MODE
IFPF_CEC
DP0_MODE_C
R19 5.1M/X
R848 1M/4/1
PEX_VDD
C1002 4.7u/6/X5R/6.3V/K
C993 1u/4/X5R/6.3V/K
C1013 1u/4/X5R/6.3V/K
C990 1u/4/X5R/6.3V/K
1x 0603 4.7uF
2x 0402 1uF
Near the GPU
1x04021uF
Under the GPU
1V8
C309 1uF/X
U2 PI3AUX221ZTAEX QFN12
VREF1 VREF2
AUX1_P AUX1_N
AUX2B_P AUX2B_N
AUX2A_P AUX2A_N
HPD1 HPD2 SEL GND
IFPF_AUX IFPF_AUX*
GPIO24_IFPF_HPD
DP_PWR_EF
C310 1uF/X
IFPF_AUX_C IFPF_AUX_C*
IFPF_AUX_R IFPF_AUX_R*
DP0_MODE_C
IFPF_HPD_R_Q
3V3
C4 0.1u/4/X7R/16V/K
U22 G5761SSTDB-R SOT23_5_DP
IN OUT EN/EN* GND OC*/SET
DP_PWR_EN
R5 100K/4/1
DP_PWR_EF_EN
C1 0.1u/4/X7R/16V/K
SNN_DP_PWR_EF_OC
R12 10K/4
C12 0.1u/4/X7R/16V/K
C15 10uF/X
DP_PWR_EF
C68 560uF/X/X
C67 560uF/FP/S/6.3V/68/8m
PCB CO-LAYOUT
Fused DP_PWR
GND

ASSEMBLY
PAGE DETAIL

<ASSEMBLY_DESCRIPTION>
IFPF DP

ALL NVIDIA DESIGN SPECIFICATIONS, REFERENCE SPECIFICATIONS, REFERENCE BOARDS, FILES, DRAWINGS, DIAGNOSTICS, LISTS AND OTHER DOCUMENTS OR INFORMATION (TOGETHER AND SEPARATELY, 'MATERIALS') ARE BEING PROVIDED 'AS IS'. THE MATERIALS MAY CONTAIN KNOWN AND UNKNOWN VIOLATIONS OR DEVIATIONS OF INDUSTRY STANDARDS AND SPECIFICATIONS. NVIDIA MAKES NO WARRANTIES, EXPRESSED, IMPLIED, STATUTORY OR OTHERWISE WITH RESPECT TO THE MATERIALS OR OTHERWISE, AND EXPRESSLY DISCLAIMS ALL IMPLIED WARRANTIES INCLUDING, WITHOUT LIMITATION, THE WARRANTIES OF DESIGN, OF NONINFRINGEMENT, MERCHANTABILITY OR FITNESS FOR A PARTICULAR PURPOSE, OR INDUSTRY STANDARDS.

GIGABYTE

Title	PCIE		
Size Custom	Document Number GV-N3060VISION OC-12GD		Rev 1.01
Date: Thursday, January 14, 2021		Sheet 22 of 54	

Page23: IFPE DP

Change to HDMI

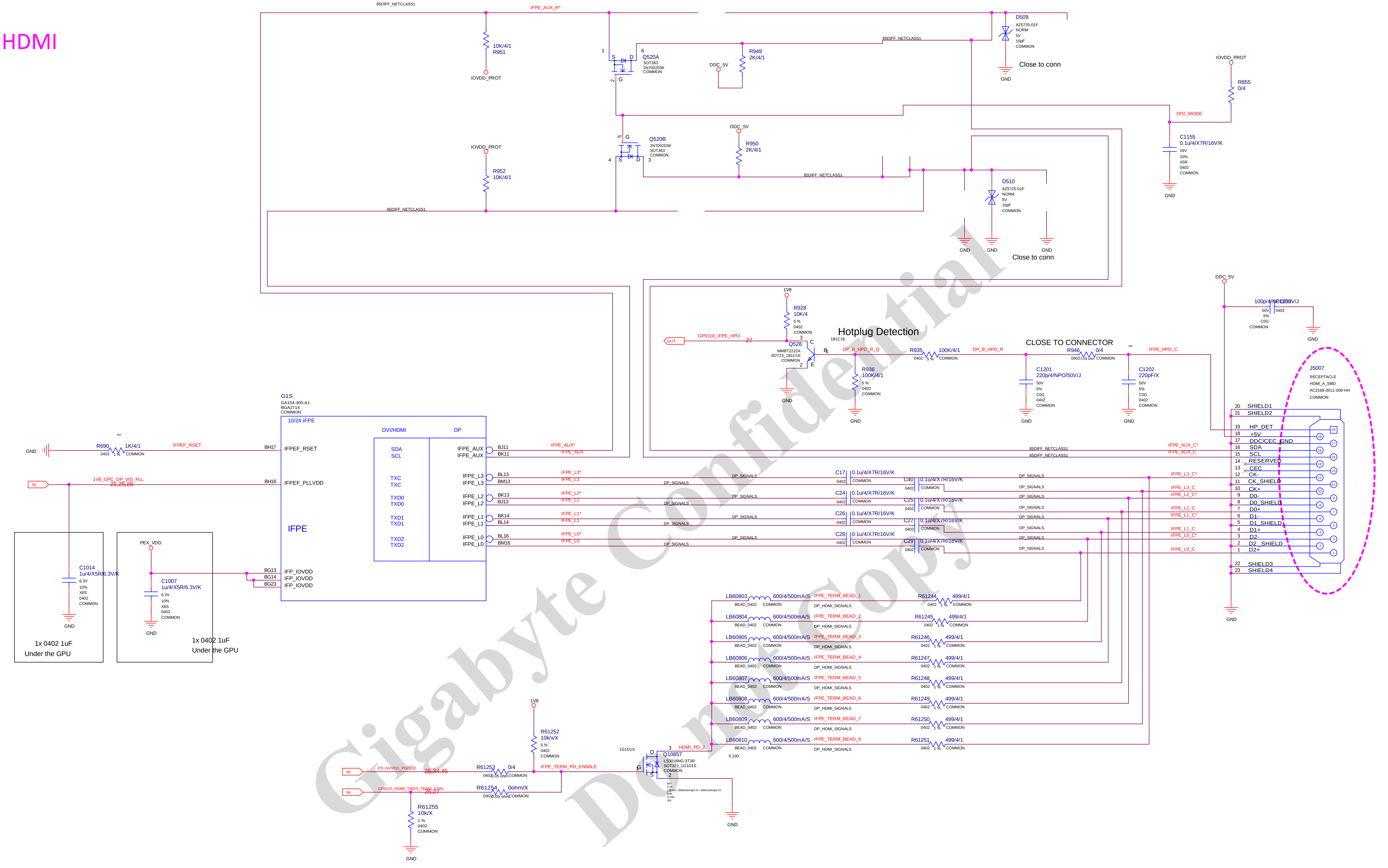

85DIFF_NETCLASS1
IFPE_AUX_R*
R951 10K/4/1
IOVDD_PROT
Q520A SOT363 2N7002DW COMMON
R949 2K/4/1
DDC_5V
D509 AZ5725-01F NORM 5V 10pF COMMON
Close to conn
IOVDD_PROT
R855 0/4
DP2_MODE
C1155 0.1u/4/X7R/16V/K 16V 10% X5R 0402 COMMON
GND
Q520B 2N7002DW SOT363 COMMON
R950 2K/4/1
R952 10K/4/1
D510 AZ5725-01F NORM 5V 10pF COMMON
Close to conn
1V8
R928 10K/4 5% 0402 COMMON
GPIO18_IFPE_HPD
OUT
Q528 MMBT2222A SOT23_1B1C1E COMMON
Hotplug Detection
DP_B_HPD_R_Q
R935 100K/4/1
DP_B_HPD_R
R936 100K/4/1 5% 0402 COMMON
CLOSE TO CONNECTOR
R946 0/4
IFPE_HPD_C
C1201 220p/4/NPO/50V/J 50V 5% C0G 0402 COMMON
C1202 220pF/X 50V 5% C0G 0402 COMMON
DDC_5V
C1200 100p/4/NPO/50V/J 50V 5% C0G 0402 COMMON
J5007 RECEPTACLE HDMI_A_SMD AC3168-0011-008-HH COMMON
20 SHIELD1
21 SHIELD2
19 HP_DET
18 +5V
17 DDC/CEC_GND
16 SDA
15 SCL
14 RESERVED
13 CEC
12 CK-
11 CK_SHIELD
10 CK+
9 D0-
8 D0_SHIELD
7 D0+
6 D1-
5 D1_SHIELD
4 D1+
3 D2-
2 D2_SHIELD
1 D2+
22 SHIELD3
23 SHIELD4
G1S GA104-300-A1 BGA2714 COMMON
10/24 IFPE
DVI/HDMI
DP
IFPEF_RSET
IFPEF_PLLVDD
SDA SCL
TXC TXC
TXD0 TXD0
TXD1 TXD1
TXD2 TXD2
IFPE
IFPE_AUX IFPE_AUX
IFPE_L3 IFPE_L3
IFPE_L2 IFPE_L2
IFPE_L1 IFPE_L1
IFPE_L0 IFPE_L0
IFP_IOVDD IFP_IOVDD IFP_IOVDD
R690 1K/4/1 0402 1% COMMON
IFPEF_RSET
1V8_GPC_DP_VID_PLL
21,25,26
C1014 1u/4/X5R/6.3V/K 6.3V 10% X6S 0402 COMMON
1x 0402 1uF Under the GPU
PEX_VDD
C1007 1u/4/X5R/6.3V/K 6.3V 10% X6S 0402 COMMON
1x 0402 1uF Under the GPU
IFPE_AUX* IFPE_AUX
IFPE_L3* IFPE_L3 IFPE_L2* IFPE_L2 IFPE_L1* IFPE_L1 IFPE_L0* IFPE_L0
DP_SIGNALS
C17 C24 C26 C28 C40 C25 C27 C29 0.1u/4/X7R/16V/K
IFPE_AUX_C* IFPE_AUX_C
IFPE_L3_C* IFPE_L3_C IFPE_L2_C* IFPE_L2_C IFPE_L1_C IFPE_L1_C* IFPE_L0_C* IFPE_L0_C
LB60803 LB60804 LB60805 LB60806 LB60807 LB60808 LB60809 LB60810 600/4/500mA/S BEAD_0402 COMMON
IFPE_TERM_BEAD_1 … IFPE_TERM_BEAD_8
DP_HDMI_SIGNALS
R61244 R61245 R61246 R61247 R61248 R61249 R61250 R61251 499/4/1 0402 1% COMMON
1V8
R61252 10k/x/X 5% 0402 COMMON
IFPE_TERM_PD_ENABLE
Q10857 LS3018NG-3T3R SOT323_1G1D1S COMMON
HDMI_PD_2
IN PS_NVVDD_PGOOD 25,34,45
R61253 0/4
IN GPIO10_HDMI_TMDS_TERM_CTRL 26,27
R61254 0ohm/X
R61255 10k/X 1% 0402 COMMON
GND

Gigabyte Confidential Do not Copy

ASSEMBLY
PAGE DETAIL

<ASSEMBLY_DESCRIPTION>
IFPE DP

ALL NVIDIA DESIGN SPECIFICATIONS, REFERENCE SPECIFICATIONS, REFERENCE BOARDS, FILES, DRAWINGS, DIAGNOSTICS, LISTS AND OTHER DOCUMENTS OR INFORMATION (TOGETHER AND SEPARATELY, 'MATERIALS') ARE BEING PROVIDED 'AS IS'. THE MATERIALS MAY CONTAIN KNOWN AND UNKNOWN VIOLATIONS OR DEVIATIONS OF INDUSTRY STANDARDS AND SPECIFICATIONS. NVIDIA MAKES NO WARRANTIES, EXPRESSED, IMPLIED, STATUTORY OR OTHERWISE WITH RESPECT TO THE MATERIALS OR OTHERWISE, AND EXPRESSLY DISCLAIMS ALL IMPLIED WARRANTIES INCLUDING, WITHOUT LIMITATION, THE WARRANTIES OF DESIGN, OF NONINFRINGEMENT, MERCHANTABILITY OR FITNESS FOR A PARTICULAR PURPOSE, OR ARISING FROM A COURSE OF DEALING, TRADE USAGE, TRADE PRACTICE, OR INDUSTRY STANDARDS.

GIGABYTE

Title
PCIE

Size: Custom
Document Number: GV-N3060VISION OC-12GD
Rev: 1.01

Date: Thursday, January 14, 2021
Sheet 23 of 54

Page24: IFPD DP

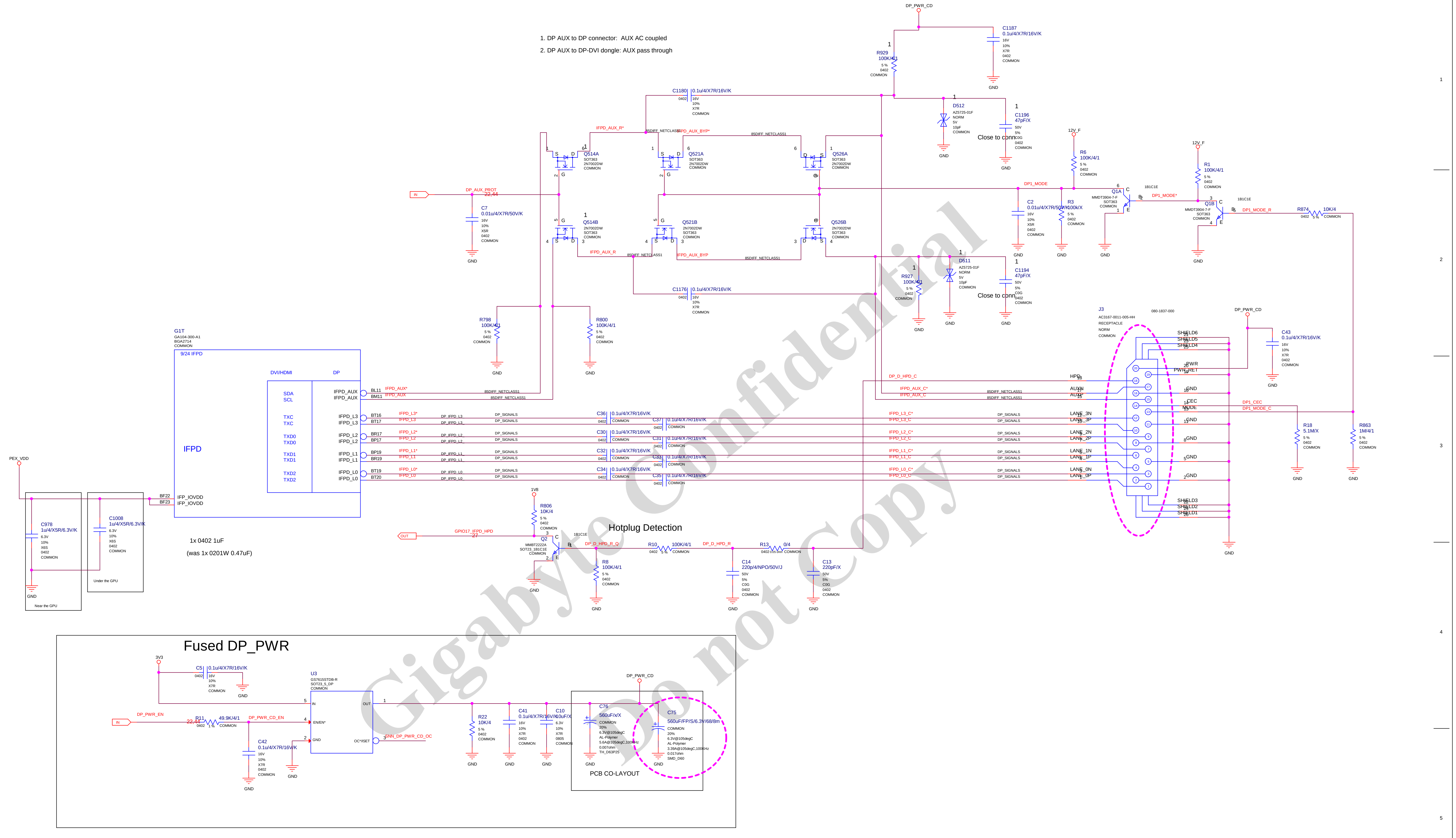

1. DP AUX to DP connector: AUX AC coupled

2. DP AUX to DP-DVI dongle: AUX pass through

DP_PWR_CD
C1187 0.1u/4/X7R/16V/K 16V 10% X7R 0402 COMMON
GND
R929 100K/4/1 5 % 0402 COMMON
C1180 0.1u/4/X7R/16V/K 0402 16V 10% X7R COMMON
D512 AZ5725-01F NORM 5V 10pF COMMON
C1196 47pF/X 50V 5% C0G 0402 COMMON
Close to conn
IFPD_AUX_R*
85DIFF_NETCLASS1
IFPD_AUX_BYP*
Q514A SOT363 2N7002DW COMMON
Q521A SOT363 2N7002DW COMMON
Q526A SOT363 2N7002DW COMMON
S D G
IN
DP_AUX_PROT
22,44
C7 0.01u/4/X7R/50V/K 16V 10% X5R 0402 COMMON
Q514B 2N7002DW SOT363 COMMON
Q521B 2N7002DW SOT363 COMMON
Q526B 2N7002DW SOT363 COMMON
IFPD_AUX_R
IFPD_AUX_BYP
C1176 0.1u/4/X7R/16V/K 0402 16V 10% X7R COMMON
R927 100K/4/1 5 % 0402 COMMON
D511 AZ5725-01F NORM 5V 10pF COMMON
C1194 47pF/X 50V 5% C0G 0402 COMMON
12V_F
R6 100K/4/1 5 % 0402 COMMON
DP1_MODE
C2 0.01u/4/X7R/50V/K 16V 10% X5R 0402 COMMON
R3 100k/X 5 % 0402 COMMON
Q1A MMDT3904-7-F SOT363 COMMON
1B1C1E
DP1_MODE*
R1 100K/4/1 5 % 0402 COMMON
Q1B MMDT3904-7-F SOT363 COMMON
DP1_MODE_R
R874 10K/4 0402 5 % COMMON
R798 100K/4/1 5 % 0402 COMMON
R800 100K/4/1 5 % 0402 COMMON
G1T GA104-300-A1 BGA2714 COMMON
9/24 IFPD
DVI/HDMI
DP
SDA
SCL
TXC
TXC
TXD0
TXD0
TXD1
TXD1
TXD2
TXD2
IFPD
IFPD_AUX BL11 IFPD_AUX*
IFPD_AUX BM11 IFPD_AUX
IFPD_L3 BT16 IFPD_L3*
IFPD_L3 BT17 IFPD_L3
IFPD_L2 BR17 IFPD_L2*
IFPD_L2 BP17 IFPD_L2
IFPD_L1 BP19 IFPD_L1*
IFPD_L1 BR19 IFPD_L1
IFPD_L0 BT19 IFPD_L0*
IFPD_L0 BT20 IFPD_L0
IFP_IOVDD BF22
IFP_IOVDD BF23
DP_IFPD_L3
DP_IFPD_L3_
DP_IFPD_L2_
DP_IFPD_L2_
DP_IFPD_L1_
DP_IFPD_L1_
DP_IFPD_L0
DP_IFPD_L0_
DP_SIGNALS
C36 0.1u/4/X7R/16V/K 0402 COMMON
C37 0.1u/4/X7R/16V/K 0402 COMMON
C30 0.1u/4/X7R/16V/K 0402 COMMON
C31 0.1u/4/X7R/16V/K 0402 COMMON
C32 0.1u/4/X7R/16V/K 0402 COMMON
C33 0.1u/4/X7R/16V/K 0402 COMMON
C34 0.1u/4/X7R/16V/K 0402 COMMON
C35 0.1u/4/X7R/16V/K 0402 COMMON
DP_D_HPD_C
IFPD_AUX_C*
IFPD_AUX_C
IFPD_L3_C*
IFPD_L3_C
IFPD_L2_C*
IFPD_L2_C
IFPD_L1_C*
IFPD_L1_C
IFPD_L0_C*
IFPD_L0_C
J3 AC3167-0011-005-HH RECEPTACLE NORM COMMON
080-1837-000
SHIELD6 21
SHIELD5 23
SHIELD4 25
PWR 20
PWR_RET 19
HPD 18
AUXN 17
AUXP 15
GND 16
CEC 14
MODE 13
LANE_3N 12
LANE_3P 10
GND 11
LANE_2N 9
LANE_2P 7
GND 8
LANE_1N 6
LANE_1P 4
GND 5
LANE_0N 3
LANE_0P 1
GND 2
SHIELD3 22
SHIELD2 24
SHIELD1 26
C43 0.1u/4/X7R/16V/K 16V 10% X7R 0402 COMMON
DP1_CEC
DP1_MODE_C
R18 5.1M/X 5 % 0402 COMMON
R863 1M/4/1 5 % 0402 COMMON
PEX_VDD
C978 1u/4/X5R/6.3V/K 6.3V 10% X6S 0402 COMMON
Near the GPU
C1008 1u/4/X5R/6.3V/K 6.3V 10% X6S 0402 COMMON
Under the GPU
1x 0402 1uF
(was 1x 0201W 0.47uF)
1V8
R806 10K/4 5 % 0402 COMMON
OUT
GPIO17_IFPD_HPD
27
Q2 MMBT2222A SOT23_1B1C1E COMMON
Hotplug Detection
DP_D_HPD_R_Q
R8 100K/4/1 5 % 0402 COMMON
R10 100K/4/1 0402 5 % COMMON
DP_D_HPD_R
R13 0/4 0402 0.05 ohm COMMON
C14 220p/4/NPO/50V/J 50V 5% C0G 0402 COMMON
C13 220pF/X 50V 5% C0G 0402 COMMON
Fused DP_PWR
3V3
C5 0.1u/4/X7R/16V/K 0402 16V 10% X7R COMMON
U3 GS7615STDB-R SOT23_5_DP COMMON
IN OUT EN/EN* GND OC*/ISET
DP_PWR_EN
R11 49.9K/4/1 0402 1 % COMMON
DP_PWR_CD_EN
C42 0.1u/4/X7R/16V/K 16V 10% X7R 0402 COMMON
SNN_DP_PWR_CD_OC
R22 10K/4 5 % 0402 COMMON
C41 0.1u/4/X7R/16V/K 16V 10% X7R 0402 COMMON
C10 10uF/X 6.3V 10% X7R 0805 COMMON
C76 560uF/x/X COMMON 20% 6.3V@105degC AL-Polymer 5.6A@105degC,100KHz 0.007ohm TH_D63P25
C75 560uF/FP/S/6.3V/68/8m COMMON 20% 6.3V@105degC AL-Polymer 3.39A@105degC,100KHz 0.017ohm SMD_D60
PCB CO-LAYOUT
GND

ALL NVIDIA DESIGN SPECIFICATIONS, REFERENCE SPECIFICATIONS, REFERENCE BOARDS, FILES, DRAWINGS, DIAGNOSTICS, LISTS AND OTHER DOCUMENTS OR INFORMATION (TOGETHER AND SEPARATELY, 'MATERIALS') ARE BEING PROVIDED 'AS IS'. THE MATERIALS MAY CONTAIN KNOWN AND UNKNOWN VIOLATIONS OR DEVIATIONS OF INDUSTRY STANDARDS AND SPECIFICATIONS. NVIDIA MAKES NO WARRANTIES, EXPRESSED, IMPLIED, STATUTORY OR OTHERWISE WITH RESPECT TO THE MATERIALS OR OTHERWISE, AND EXPRESSLY DISCLAIMS ALL IMPLIED WARRANTIES INCLUDING, WITHOUT LIMITATION, THE WARRANTIES OF DESIGN, OF NONINFRINGEMENT, MERCHANTABILITY OR FITNESS FOR A PARTICULAR PURPOSE, OR ARISING FROM A COURSE OF DEALING, TRADE USAGE, TRADE PRACTICE, OR INDUSTRY STANDARDS.

ASSEMBLY	<ASSEMBLY_DESCRIPTION>
PAGE DETAIL	IFPD DP

GIGABYTE

Title			
	PCIE		
Size: Custom	Document Number: GV-N3060VISION OC-12GD		Rev: 1.01
Date: Thursday, January 14, 2021	Sheet 24 of 54		

Page25: IFPC HDMI/DP

Del Co-Lay DP

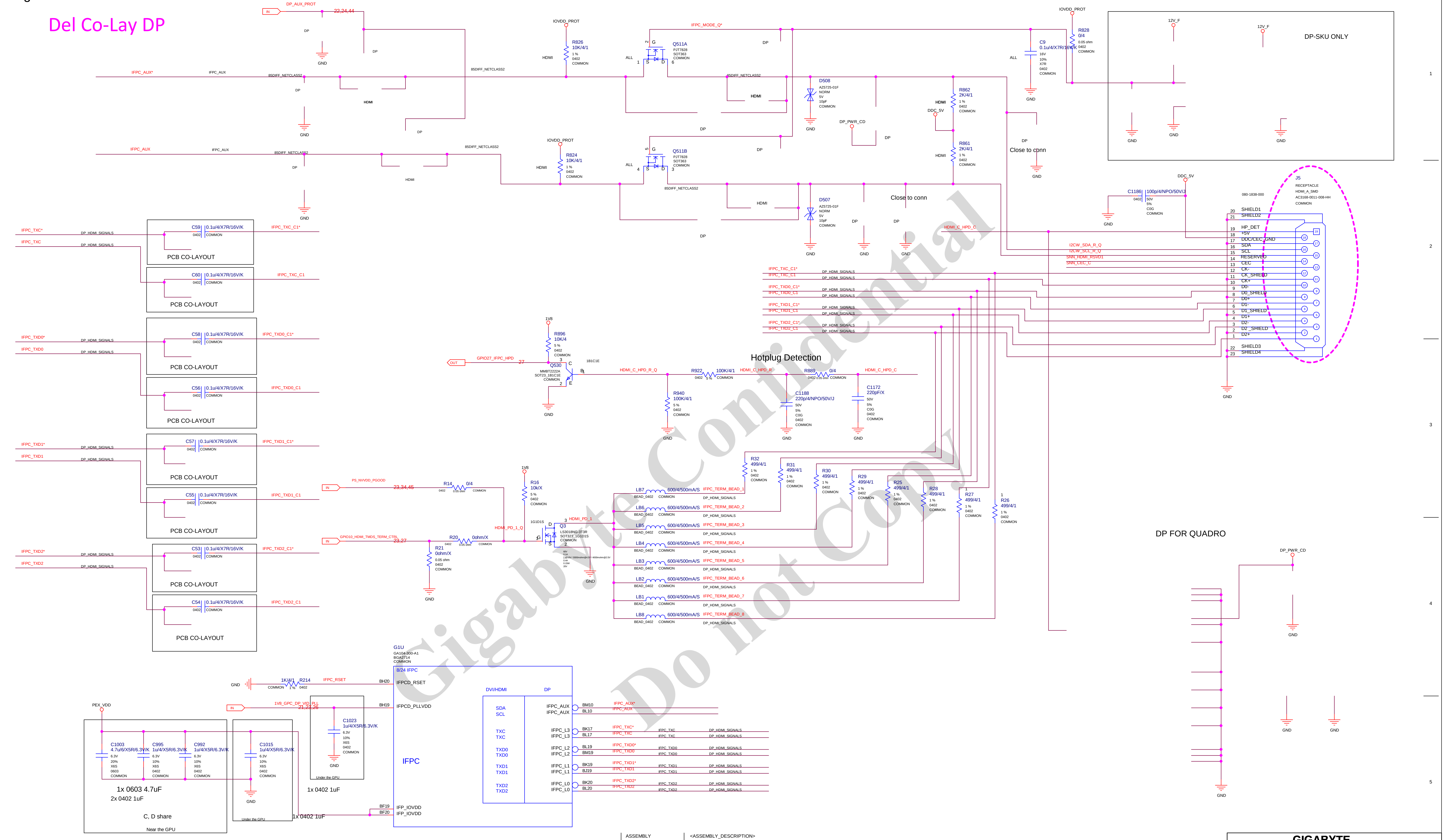
DP_AUX_PROT
22,34,44
IFPC_AUX*
IFPC_AUX
85DIFF_NETCLASS2
IOVDD_PROT
R826 10K/4/1
Q511A PJT7828 SOT363
IFPC_MODE_Q*
R824 10K/4/1
Q511B PJT7828 SOT363
D508 AZ5725-01F
D507 AZ5725-01F
R862 2K/4/1
R861 2K/4/1
DDC_5V
DP_PWR_CD
C9 0.1u/4/X7R/16V/K
R828 0/4
HDMI
ALL
DP
GND
12V_F
DP-SKU ONLY
Close to conn
C1186 100p/4/NPO/50V/J
J5 RECEPTACLE HDMI_A_SMD AC3168-0011-008-HH
080-1838-000
SHIELD1
SHIELD2
HP_DET
+5V
DDC/CEC_GND
SDA
SCL
RESERVED
CEC
CK-
CK_SHIELD
CK+
D0-
D0_SHIELD
D0+
D1-
D1_SHIELD
D1+
D2-
D2_SHIELD
D2+
SHIELD3
SHIELD4
I2CW_SDA_R_Q
I2CW_SCL_R_Q
SNN_HDMI_RSVD1
SNN_CEC_C
HDMI_C_HPD_C
IFPC_TXC*
IFPC_TXC
IFPC_TXC_C1*
IFPC_TXC_C1
IFPC_TXD0*
IFPC_TXD0
IFPC_TXD0_C1*
IFPC_TXD0_C1
IFPC_TXD1*
IFPC_TXD1
IFPC_TXD1_C1*
IFPC_TXD1_C1
IFPC_TXD2*
IFPC_TXD2
IFPC_TXD2_C1*
IFPC_TXD2_C1
DP_HDMI_SIGNALS
C59 0.1u/4/X7R/16V/K
C60 0.1u/4/X7R/16V/K
C58 0.1u/4/X7R/16V/K
C56 0.1u/4/X7R/16V/K
C57 0.1u/4/X7R/16V/K
C55 0.1u/4/X7R/16V/K
C53 0.1u/4/X7R/16V/K
C54 0.1u/4/X7R/16V/K
PCB CO-LAYOUT
1V8
R896 10K/4
Q530 MMBT2222A SOT23_1B1C1E
GPIO27_IFPC_HPD
27
OUT
Hotplug Detection
HDMI_C_HPD_R_Q
R922 100K/4/1
HDMI_C_HPD_R
R889 0/4
HDMI_C_HPD_C
R940 100K/4/1
C1188 220p/4/NPO/50V/J
C1172 220pF/X
PS_NVDD_PGOOD
23,34,45
IN
R14 0/4
R16 10K/X
HDMI_PD_1_Q
HDMI_PD_1
Q3 LS3018NG-3T3R SOT323_1G1D1S
GPIO10_HDMI_TMDS_TERM_CTRL
23,27
R20 0ohm/X
R21 0ohm/X
R32 499/4/1
R31 499/4/1
R30 499/4/1
R29 499/4/1
R25 499/4/1
R28 499/4/1
R27 499/4/1
R26 499/4/1
LB7 600/4/500mA/S IFPC_TERM_BEAD_1
LB6 600/4/500mA/S IFPC_TERM_BEAD_2
LB5 600/4/500mA/S IFPC_TERM_BEAD_3
LB4 600/4/500mA/S IFPC_TERM_BEAD_4
LB3 600/4/500mA/S IFPC_TERM_BEAD_5
LB2 600/4/500mA/S IFPC_TERM_BEAD_6
LB1 600/4/500mA/S IFPC_TERM_BEAD_7
LB8 600/4/500mA/S IFPC_TERM_BEAD_8
DP FOR QUADRO
G1U GA104-300-A1 BGA2714
8/24 IFPC
IFPCD_RSET
IFPCD_PLLVDD
IFPC
IFP_IOVDD
R214 1K/4/1
IFPC_RSET
1V8_GPC_DP_VID_PLL
21,22,26
PEX_VDD
C1003 4.7u/6/X5R/6.3V/K
C995 1u/4/X5R/6.3V/K
C992 1u/4/X5R/6.3V/K
C1015 1u/4/X5R/6.3V/K
C1023 1u/4/X5R/6.3V/K
1x 0603 4.7uF
2x 0402 1uF
C, D share
Near the GPU
Under the GPU
1x 0402 1uF
DVI/HDMI
DP
SDA
SCL
TXC
TXD0
TXD1
TXD2
IFPC_AUX
IFPC_L3
IFPC_L2
IFPC_L1
IFPC_L0
BH20
BH19
BF19
BF20
BM10
BL10
BK17
BL17
BL19
BM19
BK19
BJ19
BK20
BL20

ASSEMBLY
PAGE DETAIL

<ASSEMBLY_DESCRIPTION>
IFPC HDMI/DP

ALL NVIDIA DESIGN SPECIFICATIONS, REFERENCE SPECIFICATIONS, REFERENCE BOARDS, FILES, DRAWINGS, DIAGNOSTICS, LIST AND OTHER DOCUMENTS OR INFORMATION (TOGETHER AND SEPARATELY, 'MATERIALS') ARE BEING PROVIDED 'AS IS'. THE MATERIALS MAY CONTAIN KNOWN AND UNKNOWN VIOLATIONS OR DEVIATIONS OF INDUSTRY STANDARDS AND SPECIFICATIONS. NVIDIA MAKES NO WARRANTIES, EXPRESSED, IMPLIED, STATUTORY OR OTHERWISE WITH RESPECT TO THE MATERIALS OR OTHERWISE, AND EXPRESSLY DISCLAIMS ALL IMPLIED WARRANTIES INCLUDING, WITHOUT LIMITATION, THE WARRANTIES OF DESIGN, OF NONINFRINGEMENT, MERCHANTABILITY OR FITNESS FOR A PARTICULAR PURPOSE, OR ARISING FROM A COURSE OF DEALING, TRADE PRACTICE, OR INDUSTRY STANDARDS.

GIGABYTE

Title	PCIE	
Size Custom	Document Number GV-N3060VISION OC-12GD	Rev 1.01
Date:	Thursday, January 14, 2021	Sheet 25 of 54

Page26: MISC: ROM, XTAL, Straps

STRAP2	STRAP1	STRAP0	RAMCFG[4:0]
L	L	L	00000
L	L	H	00001
L	H	L	00010
L	H	H	00011
H	H	L	00110
H	H	H	00111
L	L	M	01000

RAMCFG[4:0]	DENSITY	WIDTH	VENDOR	DIE
00000	8Gb	256-bit	Samsung	C
00001	8Gb	256-bit	Micron	A
00010	8Gb	256-bit	Hynix	M
00011	8Gb	256-bit	Samsung	C
00100	8Gb	256-bit	Micron	A
00101	8Gb	256-bit	Hynix	M
00110	16Gb	256-bit	Samsung	M
00111				

ROM_SO	ROM_SI	ROM_SCLK	SMARTFAN[2:0],FS_OVERT	1:ENABLE 0:DISABLE
H	H	H	4'd7	FS_OVERT ENABLE
L	M	L	4'd9	FS_OVERT DISABLE

STRAP5	STRAP4	STRAP3	SMB_ALT_ADDR	DEVID_SEL	PCIE_CFG	VGA_DEVICE
M	H	H	1	1	1	1
M	H	L	1	1	1	0
M	L	H	1	1	0	1
M	L	L	1	1	0	0
L	H	M	1	0	1	1
L	M	H	1	0	1	0
L	M	L	1	0	0	1
L	L	M	1	0	0	0
H	H	H	0	1	1	1
H	H	L	0	1	1	0
H	L	H	0	1	0	1
H	L	L	0	1	0	0
L	H	H	0	0	1	1
L	H	L	0	0	1	0
L	L	H	0	0	0	1 DEFAULT
L	L	L	0	0	0	0

H=High :Tied to 1.8V
M=Middle:Tied to 0.9V
L=Low :Tied to 0V

1:SMB_ALT_ADDR ENABLE
0:SMB_ALT_ADDR DISABLE

1:DEVID_SEL REBRAND
0:DEVID_SEL ORIGNAL

1:PCIE_CFG LOW POWER
0:PCIE_CFG HIGH POWER

1:VGA_DEVICE ENABLE
0:VGA_DEVICE DISABLE

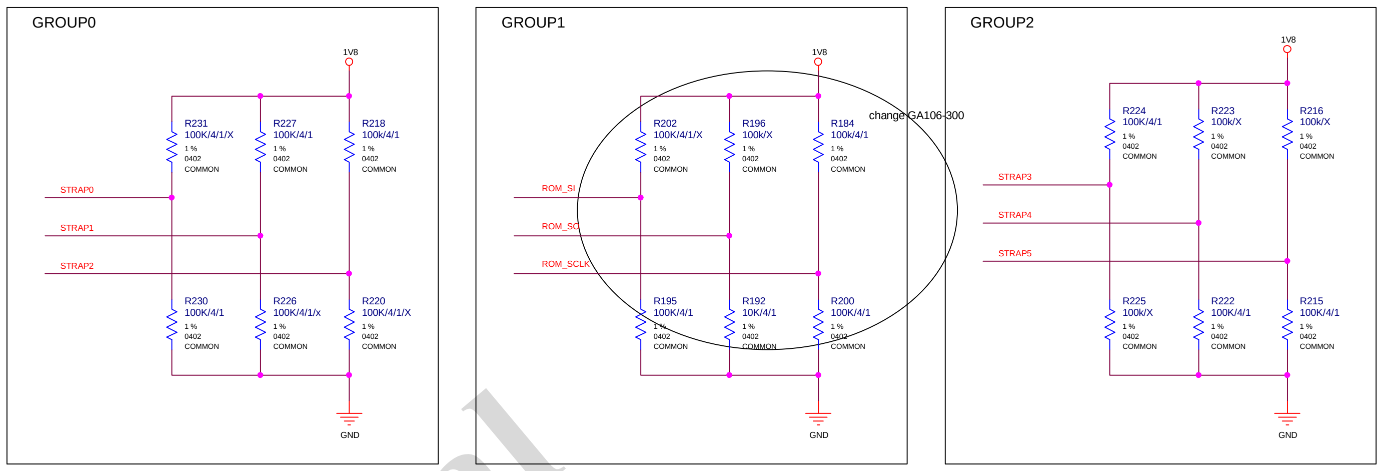
GROUP0
GROUP1
GROUP2
1V8
R231 100K/4/1/X
R227 100K/4/1
R218 100k/4/1
R230 100K/4/1
R226 100K/4/1/X
R220 100K/4/1/X
STRAP0
STRAP1
STRAP2
R202 100K/4/1/X
R196 100k/X
R184 100k/4/1
R195 100K/4/1
R192 10K/4/1
R200 100K/4/1
ROM_SI
ROM_SO
ROM_SCLK
change GA106-300
R224 100K/4/1
R223 100k/X
R216 100k/X
R225 100k/X
R222 100K/4/1
R215 100K/4/1
STRAP3
STRAP4
STRAP5
GND

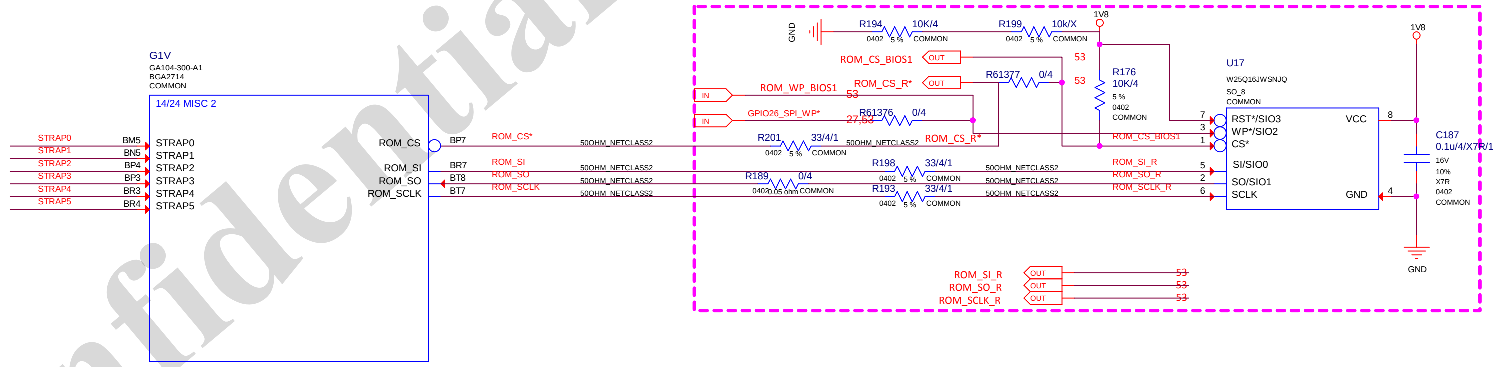
G1V
GA104-300-A1
BGA2714
COMMON
14/24 MISC 2
STRAP0
STRAP1
STRAP2
STRAP3
STRAP4
STRAP5
ROM_CS
ROM_SI
ROM_SO
ROM_SCLK
BM5
BN5
BP4
BP3
BR3
BR4
BP7
BR7
BT8
BT7
ROM_CS*
50OHM_NETCLASS2
R194 10K/4
R199 10K/X
R201 33/4/1
R189 0/4
R198 33/4/1
R193 33/4/1
R61377 0/4
R61376 0/4
R176 10K/4
ROM_CS_BIOS1
ROM_CS_R*
ROM_WP_BIOS1
GPIO26_SPI_WP*
U17
W25Q16JWSNIQ
RST*/SIO3
WP*/SIO2
CS*
SI/SIO0
SO/SIO1
SCLK
VCC
GND
C187 0.1u/4/X7R/16V/K
ROM_SI_R
ROM_SO_R
ROM_SCLK_R
1V8
GND

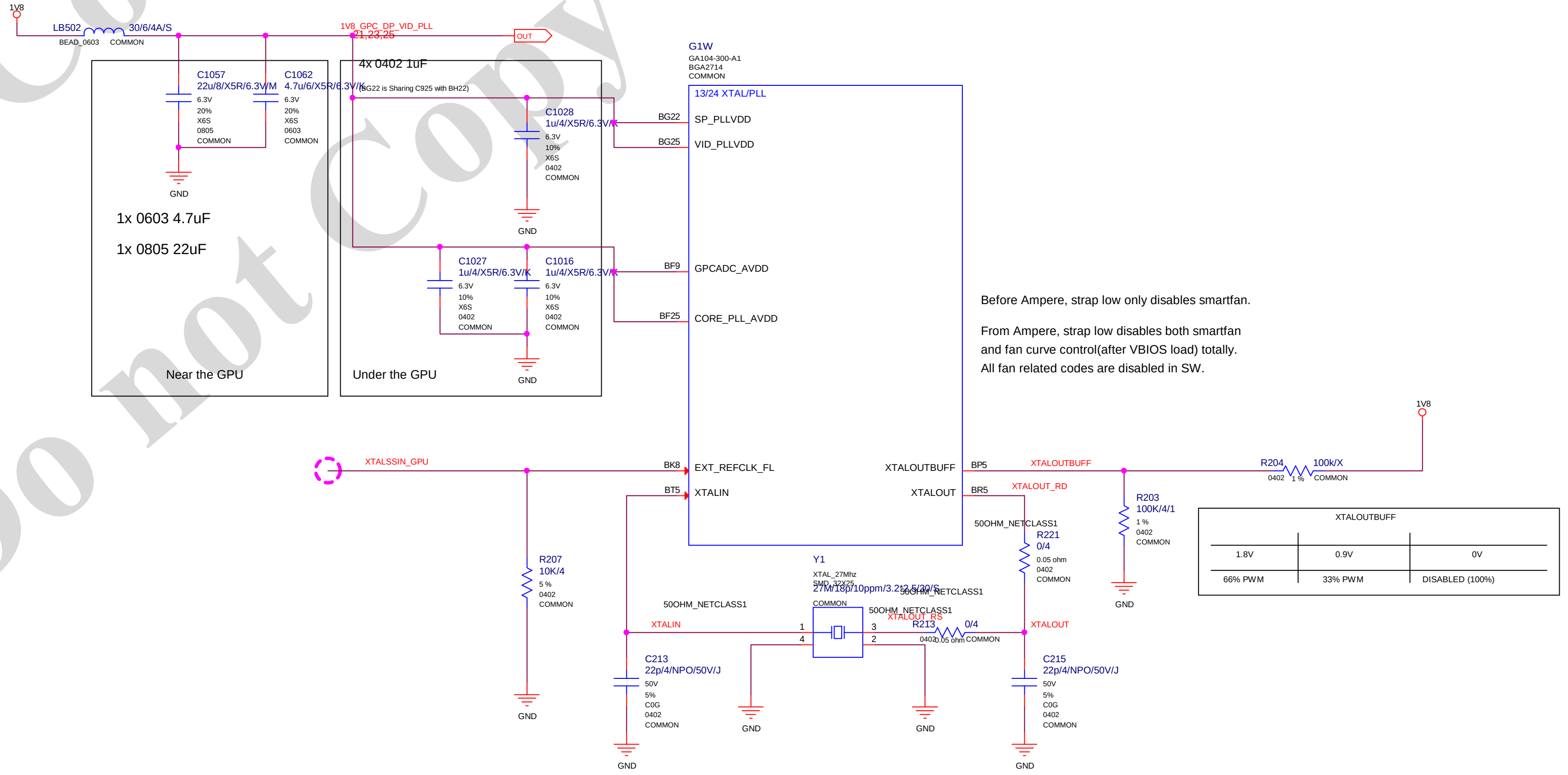
1V8
LB502 30/6/4A/S
1V8_GPC_DP_VID_PLL
C1057 22u/8/X5R/6.3V/M
C1062 4.7u/6/X5R/6.3V/K
4x 0402 1uF
C1028 1u/4/X5R/6.3V/K
C1027 1u/4/X5R/6.3V/K
C1016 1u/4/X5R/6.3V/K
1x 0603 4.7uF
1x 0805 22uF
Near the GPU
Under the GPU
G1W
GA104-300-A1
BGA2714
COMMON
13/24 XTAL/PLL
SP_PLLVDD
VID_PLLVDD
GPCADC_AVDD
CORE_PLL_AVDD
EXT_REFCLK_FL
XTALIN
XTALOUTBUFF
XTALOUT
BG22
BG25
BF9
BF25
BK8
BT5
BP5
BR5
XTALSSIN_GPU
XTALOUTBUFF
XTALOUT_RD
R204 100k/X
R203 100K/4/1
R207 10K/4
R221 0/4
R213 0/4
Y1
XTAL_27MHz
27M/18pF/10ppm/3.2X2.5/4P/S
XTALIN
XTALOUT_BS
XTALOUT
C213 22p/4/NPO/50V/J
C215 22p/4/NPO/50V/J
50OHM_NETCLASS1
GND

Before Ampere, strap low only disables smartfan.

From Ampere, strap low disables both smartfan and fan curve control(after VBIOS load) totally. All fan related codes are disabled in SW.

XTALOUTBUFF		
1.8V	0.9V	0V
66% PWM	33% PWM	DISABLED (100%)

ASSEMBLY
PAGE DETAIL

<ASSEMBLY_DESCRIPTION>
MISC: ROM, XTAL, STRAPS

ALL NVIDIA DESIGN SPECIFICATIONS, REFERENCE SPECIFICATIONS, REFERENCE BOARDS, FILES, DRAWINGS, DIAGNOSTICS, LISTS AND OTHER DOCUMENTS OR INFORMATION (TOGETHER AND SEPARATELY, 'MATERIALS') ARE BEING PROVIDED 'AS IS'. THE MATERIALS MAY CONTAIN KNOWN AND UNKNOWN VIOLATIONS OR DEVIATIONS OF INDUSTRY STANDARDS AND SPECIFICATIONS. NVIDIA MAKES NO WARRANTIES, EXPRESSED, IMPLIED, STATUTORY OR OTHERWISE WITH RESPECT TO THE MATERIALS OR OTHERWISE, AND EXPRESSLY DISCLAIMS ALL IMPLIED WARRANTIES INCLUDING, WITHOUT LIMITATION, THE WARRANTIES OF DESIGN, OF NONINFRINGEMENT, MERCHANTABILITY OR FITNESS FOR A PARTICULAR PURPOSE, OR ARISING FROM A COURSE OF DEALING, TRADE USAGE, TRADE PRACTICE, OR INDUSTRY STANDARDS.

GIGABYTE
Title
PCIE
Size Custom
Document Number GV-N3060VISION OC-12GD
Rev 1.01
Date: Thursday, January 14, 2021
Sheet 26 of 54

Page27: MISC2: JTAG, GPIO, ADC, I2C, OVERT

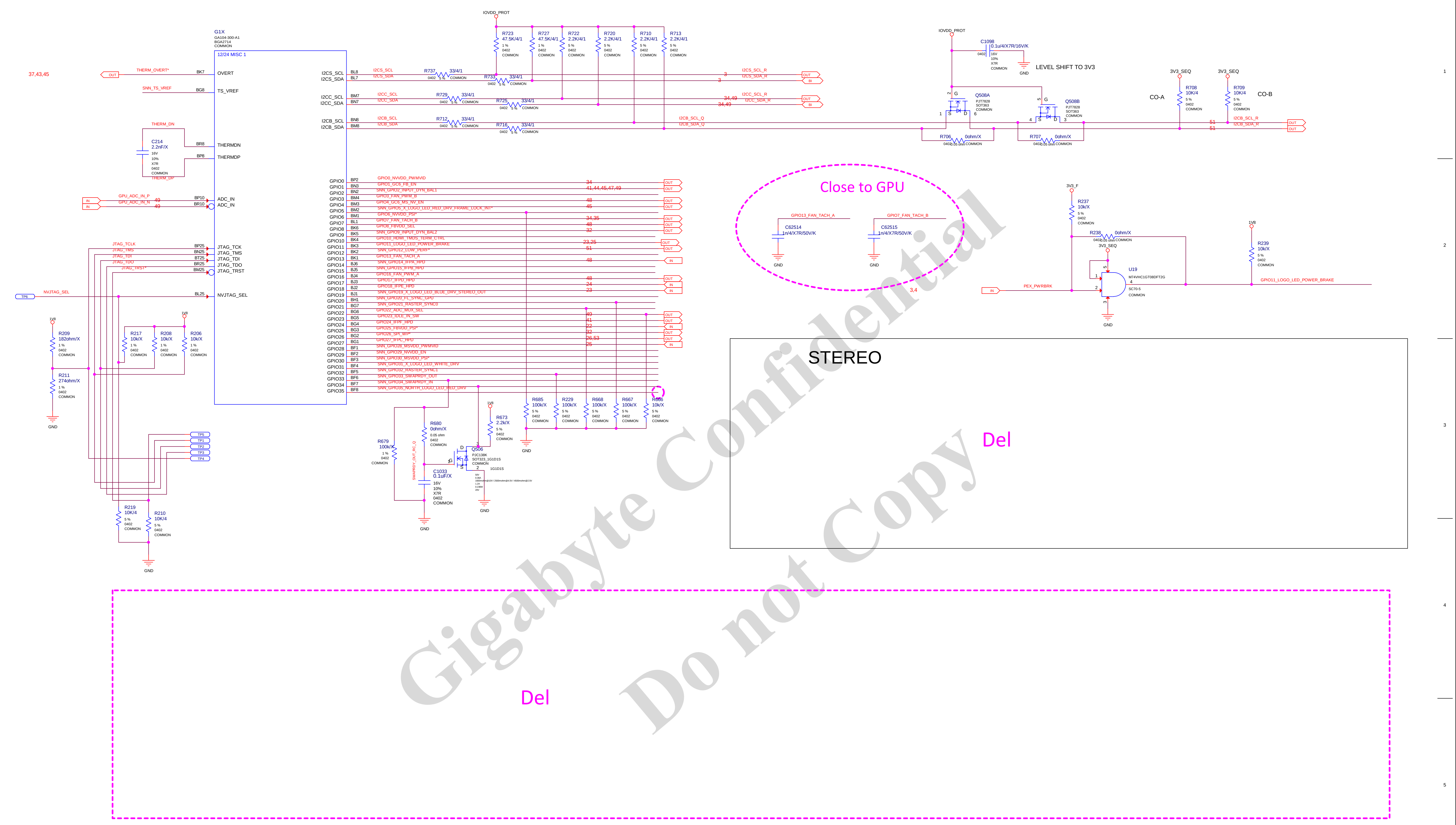
G1X
GA104-300-A1
BGA2714
COMMON
12/24 MISC 1
37,43,45
THERM_OVERT*
BK7 OVERT
SNN_TS_VREF
BG8 TS_VREF
THERM_DN
C214 2.2nF/X 16V 10% X7R 0402 COMMON
THERM_DP
BR8 THERMDN
BP8 THERMDP
GPU_ADC_IN_P
GPU_ADC_IN_N
49
BP10 ADC_IN
BR10 ADC_IN
JTAG_TCLK
JTAG_TMS
JTAG_TDI
JTAG_TDO
JTAG_TRST*
BP25 JTAG_TCK
BN25 JTAG_TMS
BT25 JTAG_TDI
BR25 JTAG_TDO
BM25 JTAG_TRST
TP6
NVJTAG_SEL
BL25 NVJTAG_SEL
R209 182ohm/X 1% 0402 COMMON
R211 274ohm/X 1% 0402 COMMON
R217 10k/X 1% 0402 COMMON
R208 10k/X 1% 0402 COMMON
R206 10k/X 1% 0402 COMMON
1V8
GND
TP5
TP1
TP2
TP3
TP4
R219 10K/4 5% 0402 COMMON
R210 10K/4 5% 0402 COMMON
I2CS_SCL BL8
I2CS_SDA BL7
I2CC_SCL BM7
I2CC_SDA BN7
I2CB_SCL BN8
I2CB_SDA BM8
IOVDD_PROT
R723 47.5K/4/1 1% 0402 COMMON
R727 47.5K/4/1 1% 0402 COMMON
R722 2.2K/4/1 5% 0402 COMMON
R720 2.2K/4/1 5% 0402 COMMON
R710 2.2K/4/1 5% 0402 COMMON
R713 2.2K/4/1 5% 0402 COMMON
R737 33/4/1
R733 33/4/1
R729 33/4/1
R725 33/4/1
R712 33/4/1
R716 33/4/1
I2CS_SCL_R
I2CS_SDA_R
I2CC_SCL_R
I2CC_SDA_R
I2CB_SCL_Q
I2CB_SDA_Q
34,49
C1098 0.1u/4/X7R/16V/K
LEVEL SHIFT TO 3V3
Q508A PJT7828 SOT363 COMMON
Q508B PJT7828 SOT363 COMMON
R706 0ohm/X 0.05 ohm COMMON
R707 0ohm/X 0.05 ohm COMMON
3V3_SEQ
R708 10K/4 5% 0402 COMMON
R709 10K/4 5% 0402 COMMON
CO-A
CO-B
51
I2CB_SCL_R
I2CB_SDA_R
GPIO0 BP2 GPIO0_NVVDD_PWMVID 34
GPIO1 BN3 GPIO1_GC6_FB_EN 41,44,45,47,49
GPIO2 BN2 SNN_GPIO2_INPUT_DYN_BAL1
GPIO3 BM4 GPIO3_FAN_PWM_B 48
GPIO4 BM3 GPIO4_GC6_MS_NV_EN 45
GPIO5 BM2 SNN_GPIO5_X_LOGO_LED_RED_DRV_FRAME_LOCK_INT*
GPIO6 BM1 GPIO6_NVVDD_PSI* 34,35
GPIO7 BL1 GPIO7_FAN_TACH_B 48
GPIO8 BK6 GPIO8_FBVDD_SEL 32
GPIO9 BK5 SNN_GPIO9_INPUT_DYN_BAL2
GPIO10 BK4 GPIO10_HDMI_TMDS_TERM_CTRL 23,25
GPIO11 BK3 GPIO11_LOGO_LED_POWER_BRAKE 51
GPIO12 BK2 SNN_GPIO12_LOW_PERF*
GPIO13 BK1 GPIO13_FAN_TACH_A 48
GPIO14 BJ6 SNN_GPIO14_IFPA_HPD
GPIO15 BJ5 SNN_GPIO15_IFPB_HPD
GPIO16 BJ4 GPIO16_FAN_PWM_A 48
GPIO17 BJ3 GPIO17_IFPD_HPD 24
GPIO18 BJ2 GPIO18_IFPE_HPD 23
GPIO19 BJ1 SNN_GPIO19_X_LOGO_LED_BLUE_DRV_STEREO_OUT
GPIO20 BH1 SNN_GPIO20_FL_SYNC_GPU
GPIO21 BG7 SNN_GPIO21_RASTER_SYNC0
GPIO22 BG6 GPIO22_ADC_MUX_SEL 49
GPIO23 BG5 GPIO23_IDLE_IN_SW 41
GPIO24 BG4 GPIO24_IFPF_HPD 22
GPIO25 BG3 GPIO25_FBVDD_PSI* 32
GPIO26 BG2 GPIO26_SPI_WP* 26,53
GPIO27 BG1 GPIO27_IFPC_HPD 25
GPIO28 BF1 SNN_GPIO28_MSVDD_PWMVID
GPIO29 BF2 SNN_GPIO29_NVVDD_EN
GPIO30 BF3 SNN_GPIO30_MSVDD_PSI*
GPIO31 BF4 SNN_GPIO31_X_LOGO_LED_WHITE_DRV
GPIO32 BF5 SNN_GPIO32_RASTER_SYNC1
GPIO33 BF6 SNN_GPIO33_SWAPRDY_OUT
GPIO34 BF7 SNN_GPIO34_SWAPRDY_IN
GPIO35 BF8 SNN_GPIO35_NORTH_LOGO_LED_RED_DRV
OUT
IN
BI
R685 100k/X 5% 0402 COMMON
R229 100k/X 5% 0402 COMMON
R668 100k/X 5% 0402 COMMON
R667 100k/X 5% 0402 COMMON
R666 10k/X 5% 0402 COMMON
R680 0ohm/X 0.05 ohm 0402 COMMON
R679 100k/X 1% 0402 COMMON
SWAPRDY_OUT_RC_Q
C1033 0.1uF/X 16V 10% X7R 0402 COMMON
R673 2.2k/X 5% 0402 COMMON
Q506 PJC138K SOT323_1G1D1S COMMON
1G1D1S
Close to GPU
GPIO13_FAN_TACH_A
GPIO7_FAN_TACH_B
C62514 1n/4/X7R/50V/K
C62515 1n/4/X7R/50V/K
3V3_F
R237 10k/X 5% 0402 COMMON
R238 0ohm/X 0.05 ohm COMMON
3V3_SEQ
U19 M74VHC1GT08DFT2G SC70-5 COMMON
PEX_PWRBRK
3,4
R239 10k/X 5% 0402 COMMON
GPIO11_LOGO_LED_POWER_BRAKE
STEREO
Del
Del

ASSEMBLY
PAGE DETAIL
<ASSEMBLY_DESCRIPTION>
MISC2: JTAG,GPIO,ADC,I2C,OVERT

ALL NVIDIA DESIGN SPECIFICATIONS, REFERENCE SPECIFICATIONS, REFERENCE BOARDS, FILES, DRAWINGS, DIAGNOSTICS, LISTS AND OTHER DOCUMENTS OR INFORMATION (TOGETHER AND SEPARATELY, 'MATERIALS') ARE BEING PROVIDED 'AS IS'. THE MATERIALS MAY CONTAIN KNOWN AND UNKNOWN VIOLATIONS OR DEVIATIONS OF INDUSTRY STANDARDS AND SPECIFICATIONS. NVIDIA MAKES NO WARRANTIES, EXPRESSED, IMPLIED, STATUTORY OR OTHERWISE WITH RESPECT TO THE MATERIALS OR OTHERWISE, AND EXPRESSLY DISCLAIMS ALL IMPLIED WARRANTIES INCLUDING, WITHOUT LIMITATION, THE WARRANTIES OF DESIGN, OF NONINFRINGEMENT, MERCHANTABILITY OR FITNESS FOR A PARTICULAR PURPOSE, OR ARISING FROM A COURSE OF DEALING, TRADE USAGE, PUBLIC POLICY, OR INDUSTRY STANDARDS.

GIGABYTE

Title
PCIE

Size Custom
Document Number GV-N3060VISION OC-12GD
Rev 1.01

Date: Thursday, January 14, 2021

Page28: Blank

ASSEMBLY <ASSEMBLY_DESCRIPTION>
PAGE DETAIL Blank

ALL NVIDIA DESIGN SPECIFICATIONS, REFERENCE SPECIFICATIONS, REFERENCE BOARDS, FILES, DRAWINGS, DIAGNOSTICS, LISTS AND OTHER DOCUMENTS OR INFORMATION (TOGETHER AND SEPARATELY, 'MATERIALS') ARE BEING PROVIDED 'AS IS'. THE MATERIALS MAY CONTAIN KNOWN AND UNKNOWN VIOLATIONS OR DEVIATIONS OF INDUSTRY STANDARDS AND SPECIFICATIONS. NVIDIA MAKES NO WARRANTIES, EXPRESSED, IMPLIED, STATUTORY OR OTHERWISE WITH RESPECT TO THE MATERIALS OR OTHERWISE, AND EXPRESSLY DISCLAIMS ALL IMPLIED WARRANTIES INCLUDING, WITHOUT LIMITATION, THE WARRANTIES OF DESIGN, OF NONINFRINGEMENT, MERCHANTABILITY OR FITNESS FOR A PARTICULAR PURPOSE, OR ARISING FROM A COURSE OF DEALING, TRADE USAGE, TRADE PRACTICE, OR INDUSTRY STANDARDS.

GIGABYTE

Title PCIE

Size Custom
Document Number GV-N3060VISION OC-12GD
Rev 1.01

Date: Thursday, January 14, 2021
Sheet 28 of 54

Page29: PS: 1V8

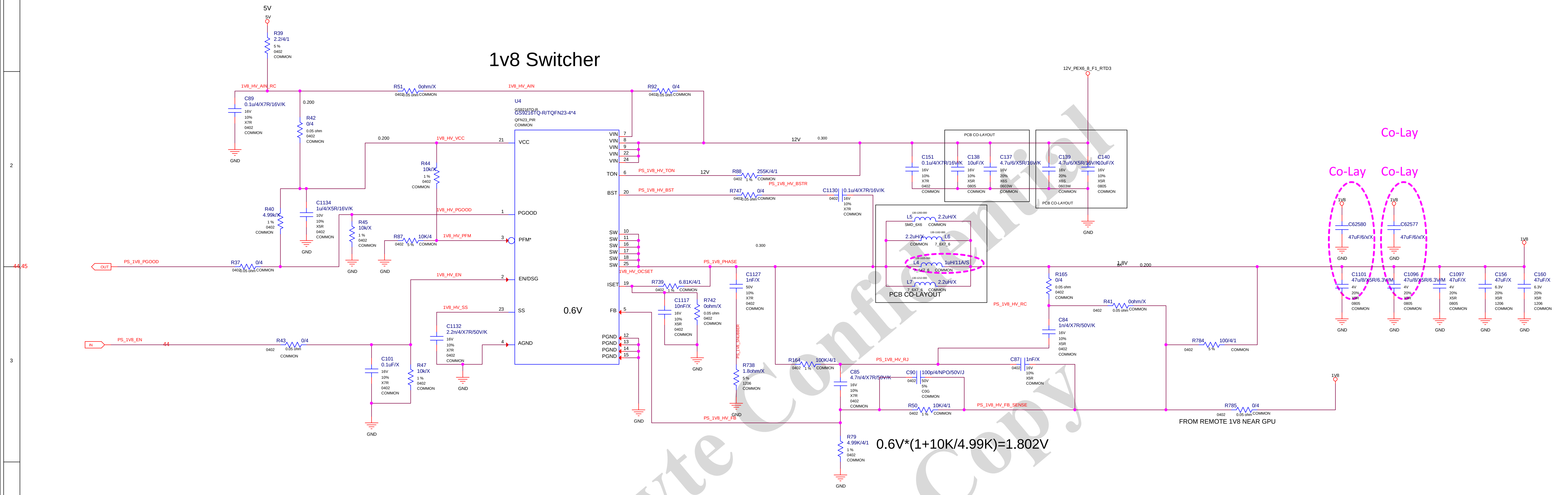

1v8 Switcher
5V
R39 2.2/4/1
1V8_HV_AIN_RC
C89 0.1u/4/X7R/16V/K
R42 0/4
R40 4.99k/X
C1134 1u/4/X5R/16V/K
R45 10k/X
R87 10K/4
R37 0/4
PS_1V8_PGOOD
OUT
R51 0ohm/X
1V8_HV_AIN
1V8_HV_VCC
R44 10k/X
1V8_HV_PGOOD
1V8_HV_PFM
1V8_HV_EN
1V8_HV_SS
C1132 2.2n/4/X7R/50V/K
PS_1V8_EN
IN
R43 0/4
C101 0.1uF/X
R47 10k/X
U4
GS9216TQ-R/TQFN23-4*4
QFN23_PIR
VCC
PGOOD
PFM*
EN/DSG
SS
AGND
0.6V
VIN
TON
BST
SW
ISET
FB
PGND
R92 0/4
12V
R88 255K/4/1
PS_1V8_HV_TON
PS_1V8_HV_BSTR
PS_1V8_HV_BST
R747 0/4
C1130 0.1u/4/X7R/16V/K
1V8_HV_OCSET
PS_1V8_PHASE
R739 6.81K/4/1
C1117 10nF/X
R742 0ohm/X
C1127 1nF/X
R738 1.8ohm/X
PS_1V8_HV_FB
GND
12V_PEX6_8_F1_RTD3
PCB CO-LAYOUT
C151 0.1u/4/X7R/16V/K
C138 10uF/X
C137 4.7u/6/X5R/16V/K
C139 4.7u/6/X5R/16V/K
C140 10uF/X
L5 2.2uH/X
L6 2.2uH/X
L4 1uH/11A/S
L7 2.2uH/X
1.8V
R165 0/4
C84 1n/4/X7R/50V/K
PS_1V8_HV_RC
R41 0ohm/X
R164 100K/4/1
PS_1V8_HV_RJ
C85 4.7n/4/X7R/50V/K
C90 100p/4/NPO/50V/J
C87 1nF/X
R50 10K/4/1
PS_1V8_HV_FB_SENSE
R79 4.99K/4/1
R784 100/4/1
R785 0/4
FROM REMOTE 1V8 NEAR GPU
1V8
Co-Lay
C62580 47uF/6/X/X
C62577 47uF/6/X/X
C1101 47u/8/X5R/6.3V/M
C1096 47u/8/X5R/6.3V/M
C1097 47uF/X
C156 47uF/X
C160 47uF/X

0.6V*(1+10K/4.99K)=1.802V

ASSEMBLY <ASSEMBLY_DESCRIPTION>
PAGE DETAIL PS: 1V8

ALL NVIDIA DESIGN SPECIFICATIONS, REFERENCE SPECIFICATIONS, REFERENCE BOARDS, FILES, DRAWINGS, DIAGNOSTICS, LISTS AND OTHER DOCUMENTS OR INFORMATION (TOGETHER AND SEPARATELY, 'MATERIALS') ARE BEING PROVIDED 'AS IS'. THE MATERIALS MAY CONTAIN KNOWN AND UNKNOWN VIOLATIONS OR DEVIATIONS OF INDUSTRY STANDARDS AND SPECIFICATIONS. NVIDIA MAKES NO WARRANTIES, EXPRESSED, IMPLIED, STATUTORY OR OTHERWISE WITH RESPECT TO THE MATERIALS OR OTHERWISE, AND EXPRESSLY DISCLAIMS ALL IMPLIED WARRANTIES INCLUDING, WITHOUT LIMITATION, THE WARRANTIES OF DESIGN, OF NONINFRINGEMENT, MERCHANTABILITY OR FITNESS FOR A PARTICULAR PURPOSE, OR ARISING FROM A COURSE OF DEALING, TRADE USAGE, TRADE PRACTICE, OR INDUSTRY STANDARDS.

GIGABYTE

Title
PCIE

Size: Custom
Document Number: GV-N3060VISION OC-12GD
Rev: 1.01

Date: Thursday, January 14, 2021
Sheet 29 of 54

Page30: PS: 5V

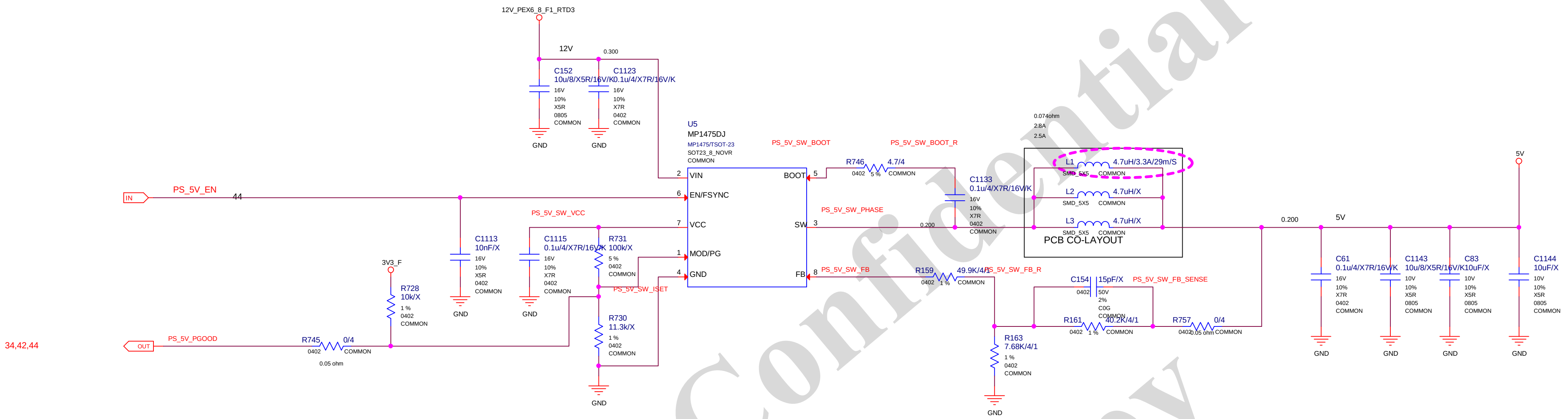
12V_PEX6_8_F1_RTD3
12V
0.300
C152
10u/8/X5R/16V/K
16V
10%
X5R
0805
COMMON
C1123
0.1u/4/X7R/16V/K
16V
10%
X7R
0402
COMMON
GND
GND
U5
MP1475DJ
MP1475/TSOT-23
SOT23_8_NOVR
COMMON
2 VIN
6 EN/FSYNC
7 VCC
1 MOD/PG
4 GND
BOOT 5
SW 3
FB 8
PS_5V_SW_BOOT
PS_5V_SW_BOOT_R
R746
4.7/4
0402
5 %
COMMON
C1133
0.1u/4/X7R/16V/K
16V
10%
X7R
0402
COMMON
PS_5V_SW_PHASE
0.200
0.074ohm
2.8A
2.5A
L1
4.7uH/3.3A/29m/S
SMD_5X5
COMMON
L2
4.7uH/X
SMD_5X5
COMMON
L3
4.7uH/X
SMD_5X5
COMMON
PCB CO-LAYOUT
0.200
5V
5V
C61
0.1u/4/X7R/16V/K
16V
10%
X7R
0402
COMMON
C1143
10u/8/X5R/16V/K
10V
10%
X5R
0805
COMMON
C83
10uF/X
10V
10%
X5R
0805
COMMON
C1144
10uF/X
10V
10%
X5R
0805
COMMON
GND
GND
GND
GND
IN
PS_5V_EN
44
PS_5V_SW_VCC
C1113
10nF/X
16V
10%
X5R
0402
COMMON
GND
C1115
0.1u/4/X7R/16V/K
16V
10%
X7R
0402
COMMON
GND
R731
100k/X
5 %
0402
COMMON
PS_5V_SW_ISET
R730
11.3k/X
1 %
0402
COMMON
GND
3V3_F
R728
10k/X
1 %
0402
COMMON
34,42,44
OUT
PS_5V_PGOOD
R745
0/4
0402
COMMON
0.05 ohm
PS_5V_SW_FB
R159
49.9K/4/1
0402
1 %
COMMON
PS_5V_SW_FB_R
C154
15pF/X
0402
50V
2%
C0G
COMMON
PS_5V_SW_FB_SENSE
R161
40.2K/4/1
0402
1 %
COMMON
R757
0/4
0402
0.05 ohm
COMMON
R163
7.68K/4/1
1 %
0402
COMMON
GND

0.8V*(1+40.2K/7.68K)=4.9875V

ASSEMBLY <ASSEMBLY_DESCRIPTION>
PAGE DETAIL PS: 5V

ALL NVIDIA DESIGN SPECIFICATIONS, REFERENCE SPECIFICATIONS, REFERENCE BOARDS, FILES, DRAWINGS, DIAGNOSTICS, LISTS AND OTHER DOCUMENTS OR INFORMATION (TOGETHER AND SEPARATELY, 'MATERIALS') ARE BEING PROVIDED 'AS IS'. THE MATERIALS MAY CONTAIN KNOWN AND UNKNOWN VIOLATIONS OR DEVIATIONS OF INDUSTRY STANDARDS AND SPECIFICATIONS. NVIDIA MAKES NO WARRANTIES, EXPRESSED, IMPLIED, STATUTORY OR OTHERWISE WITH RESPECT TO THE MATERIALS AND EXPRESSLY DISCLAIMS ALL IMPLIED WARRANTIES INCLUDING, WITHOUT LIMITATION, THE WARRANTIES OF DESIGN, OF NONINFRINGEMENT, MERCHANTABILITY OR FITNESS FOR A PARTICULAR PURPOSE, OR ARISING FROM A COURSE OF DEALING, TRADE USAGE, TRADE PRACTICE, OR INDUSTRY STANDARDS.

GIGABYTE
Title
PCIE
Size Custom
Document Number GV-N3060VISION OC-12GD
Rev 1.01
Date: Thursday, January 14, 2021
Sheet 30 of 54

Page31: PS: PEXVDD

PEX Switcher

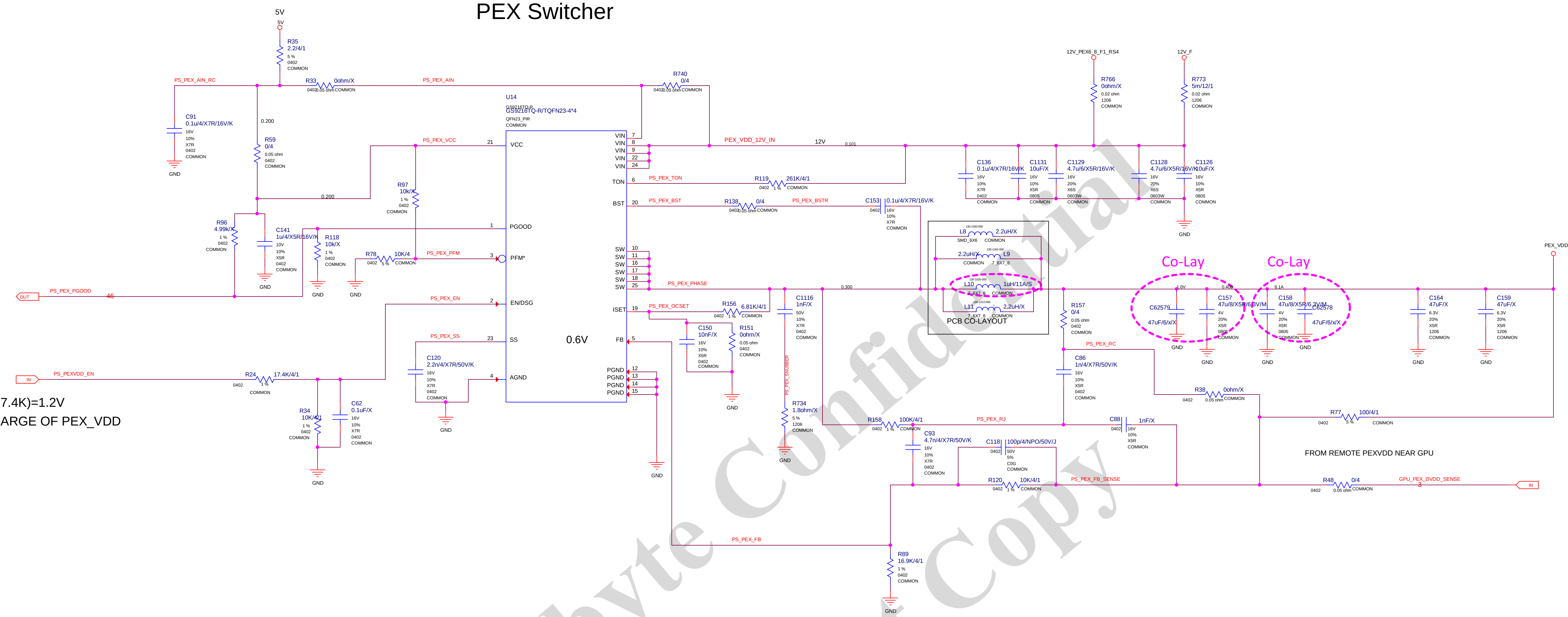
5V
R35 2.2/4/1
PS_PEX_AIN_RC
R33 0ohm/X
PS_PEX_AIN
R740 0/4
U14
GS9216TQ-R/TQFN23-4*4
QFN23_PIR
C91 0.1u/4/X7R/16V/K
R59 0/4
PS_PEX_VCC
VCC
VIN
PEX_VDD_12V_IN
12V
12V_PEX6_8_F1_RS4
12V_F
R766 0ohm/X
R773 5m/12/1
R97 10k/X
TON
PS_PEX_TON
R119 261K/4/1
BST
PS_PEX_BST
R138 0/4
PS_PEX_BSTR
C153 0.1u/4/X7R/16V/K
C136 0.1u/4/X7R/16V/K
C1131 10uF/X
C1129 4.7u/6/X5R/16V/K
C1128 4.7u/6/X5R/16V/K
C1126 10uF/X
R96 4.99k/X
C141 1u/4/X5R/16V/K
R118 10k/X
PGOOD
R78 10K/4
PS_PEX_PFM
PFM*
PS_PEX_PGOOD
L8 2.2uH/X
L9 2.2uH/X
L10 1uH/11A/S
L11 2.2uH/X
PCB CO-LAYOUT
SW
PS_PEX_PHASE
Co-Lay
Co-Lay
PEX_VDD
PS_PEX_EN
EN/DSG
ISET
PS_PEX_OCSET
R156 6.81K/4/1
C1116 1nF/X
C150 10nF/X
R151 0ohm/X
R157 0/4
C62579 47uF/6/X/X
C157 47u/8/X5R/6.3V/M
C158 47u/8/X5R/6.3V/M
C62578 47uF/6/X/X
C164 47uF/X
C159 47uF/X
PS_PEX_SS
SS
0.6V
FB
C120 2.2n/4/X7R/50V/K
PS_PEX_RC
C86 1n/4/X7R/50V/K
R38 0ohm/X
PS_PEXVDD_EN
R24 17.4K/4/1
AGND
PGND
R34 10K/4/1
C62 0.1uF/X
R734 1.8ohm/X
R158 100K/4/1
PS_PEX_RJ
C88 1nF/X
R77 100/4/1
C93 4.7n/4/X7R/50V/K
C118 100p/4/NPO/50V/J
R120 10K/4/1
PS_PEX_FB_SENSE
R48 0/4
GPU_PEX_DVDD_SENSE
PS_PEX_FB
R89 16.9K/4/1
GND

EN: 3.3V*(10K/27.4K)=1.2V

ENABLE DISCHARGE OF PEX_VDD

FROM REMOTE PEXVDD NEAR GPU

0.6V*(1+10K/16.9K)=0.9550V

ASSEMBLY <ASSEMBLY_DESCRIPTION>
PAGE DETAIL PS: PEXVDD

ALL NVIDIA DESIGN SPECIFICATIONS, REFERENCE SPECIFICATIONS, REFERENCE BOARDS, FILES, DRAWINGS, DIAGNOSTICS, LISTS AND OTHER DOCUMENTS OR INFORMATION (TOGETHER AND SEPARATELY, 'MATERIALS') ARE BEING PROVIDED 'AS IS'. THE MATERIALS MAY CONTAIN KNOWN AND UNKNOWN VIOLATIONS OR DEVIATIONS OF INDUSTRY STANDARDS AND SPECIFICATIONS. NVIDIA MAKES NO WARRANTIES, EXPRESSED, IMPLIED, STATUTORY OR OTHERWISE WITH RESPECT TO THE MATERIALS OR OTHERWISE, AND EXPRESSLY DISCLAIMS ALL IMPLIED WARRANTIES INCLUDING, WITHOUT LIMITATION, THE WARRANTIES OF DESIGN, OF NONINFRINGEMENT, MERCHANTABILITY OR FITNESS FOR A PARTICULAR PURPOSE, OR ARISING FROM A COURSE OF DEALING, TRADE USAGE, TRADE PRACTICE, OR INDUSTRY STANDARDS.

GIGABYTE
Title PCIE
Size Custom
Document Number GV-N3060VISION OC-12GD
Rev 1.01
Date: Thursday, January 14, 2021
Sheet 31 of 54

Page32: PS: FBVDDQ

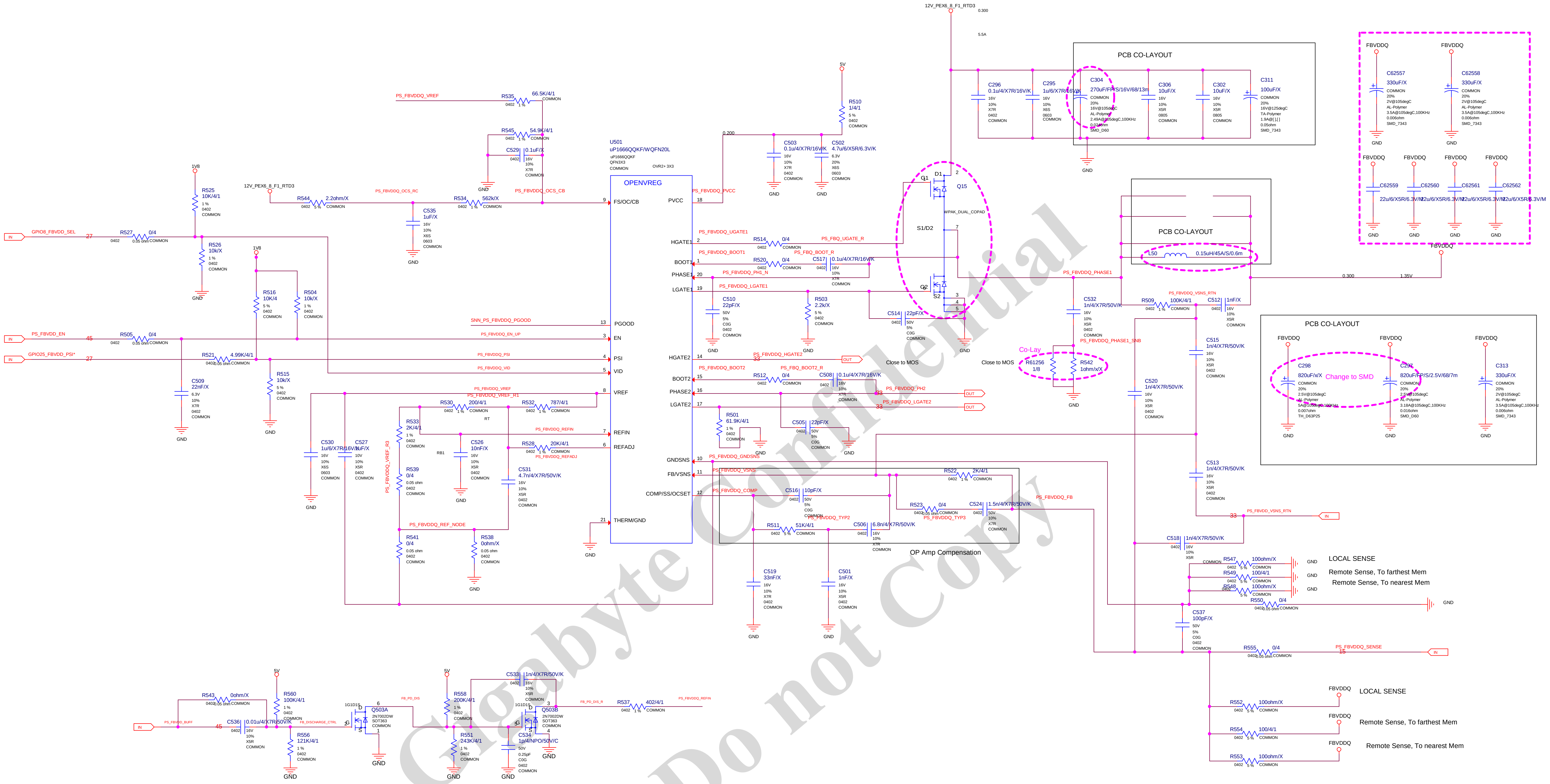

12V_PEX6_8_F1_RTD3
0.300
5.5A
PCB CO-LAYOUT
C296 0.1u/4/X7R/16V/K
C295 1u/6/X7R/16V/K
C304 270uF/FP/S/16V/68/13m
C306 10uF/X
C302 10uF/X
C311 100uF/X
FBVDDQ
C62557 330uF/X
C62558 330uF/X
C62559 22u/6/X5R/6.3V/M
C62560 22u/6/X5R/6.3V/M
C62561 22u/6/X5R/6.3V/M
C62562 22u/6/X5R/6.3V/M
PS_FBVDDQ_VREF
R535 66.5K/4/1
R545 54.9K/4/1
C529 0.1uF/X
5V
R510 1/4/1
0.200
C503 0.1u/4/X7R/16V/K
C502 4.7u/6/X5R/6.3V/K
U501
uP1666QQKF/WQFN20L
OVR2+ 3X3
OPENVREG
1V8
R525 10K/4/1
12V_PEX6_8_F1_RTD3
R544 2.2ohm/X
PS_FBVDDQ_OCS_RC
R534 562k/X
PS_FBVDDQ_OCS_CB
C535 1uF/X
FS/OC/CB
PVCC
PS_FBVDDQ_PVCC
Q15
D1
G1
WPAK_DUAL_COPAD
S1/D2
G2
S2
GPIO8_FBVDD_SEL
R527 0/4
R526 10k/X
R516 10K/4
R504 10k/X
PS_FBVDDQ_UGATE1
R514 0/4
PS_FBQ_UGATE_R
HGATE1
BOOT1
PHASE1
LGATE1
PS_FBVDDQ_BOOT1
R520 0/4
PS_FBQ_BOOT_R
C517 0.1u/4/X7R/16V/K
PS_FBVDDQ_PH1_N
PS_FBVDDQ_LGATE1
C510 22pF/X
R503 2.2k/X
C514 22pF/X
L50 0.15uH/45A/S/0.6m
PS_FBVDDQ_PHASE1
0.300
1.35V
PS_FBVDDQ_VSNS_RTN
R509 100K/4/1
C512 1nF/X
C532 1n/4/X7R/50V/K
PS_FBVDDQ_PHASE1_SNB
Co-Lay
R61256 1/8
R542 1ohm/x/X
Close to MOS
Close to MOS
C515 1n/4/X7R/50V/K
C520 1n/4/X7R/50V/K
C298 820uF/x/X
Change to SMD
C297 820uF/FP/S/2.5V/68/7m
C313 330uF/X
SNN_PS_FBVDDQ_PGOOD
PGOOD
PS_FBVDD_EN
R505 0/4
PS_FBVDDQ_EN_UP
EN
GPIO25_FBVDD_PSI*
R521 4.99K/4/1
PS_FBVDDQ_PSI
PSI
PS_FBVDDQ_VID
VID
C509 22nF/X
R515 10k/X
PS_FBVDDQ_VREF
PS_FBVDDQ_VREF_R1
VREF
R530 200/4/1
RT
R532 787/4/1
R533 2K/4/1
RB1
C526 10nF/X
PS_FBVDDQ_REFIN
REFIN
R528 20K/4/1
PS_FBVDDQ_REFADJ
REFADJ
C530 1u/6/X7R/16V/K
C527 1uF/X
PS_FBVDDQ_VREF_R3
R539 0/4
C531 4.7n/4/X7R/50V/K
PS_FBVDDQ_REF_NODE
R541 0/4
R538 0ohm/X
HGATE2
PS_FBVDDQ_HGATE2
BOOT2
PS_FBVDDQ_BOOT2
R512 0/4
PS_FBQ_BOOT2_R
C508 0.1u/4/X7R/16V/K
PHASE2
PS_FBVDDQ_PH2
LGATE2
PS_FBVDDQ_LGATE2
R501 61.9K/4/1
C505 22pF/X
GNDSNS
PS_FBVDDQ_GNDSNS
FB/VSNS
PS_FBVDDQ_VSNS
COMP/SS/OCSET
PS_FBVDDQ_COMP
THERM/GND
C516 10pF/X
R522 2K/4/1
R523 0/4
C524 1.5n/4/X7R/50V/K
PS_FBVDDQ_FB
PS_FBVDDQ_TYP2
PS_FBVDDQ_TYP3
R511 51K/4/1
C506 6.8n/4/X7R/50V/K
OP Amp Compensation
C519 33nF/X
C501 1nF/X
C513 1n/4/X7R/50V/K
PS_FBVDD_VSNS_RTN
C518 1n/4/X7R/50V/K
R547 100ohm/X
R549 100/4/1
R548 100ohm/X
R550 0/4
LOCAL SENSE
Remote Sense, To farthest Mem
Remote Sense, To nearest Mem
C537 100pF/X
R555 0/4
PS_FBVDDQ_SENSE
R552 100ohm/X
R554 100/4/1
R553 100ohm/X
LOCAL SENSE
Remote Sense, To farthest Mem
Remote Sense, To nearest Mem
PS_FBVDD_BUFF
R543 0ohm/X
R560 100K/4/1
C536 0.01u/4/X7R/50V/K
FB_DISCHARGE_CTRL
R556 121K/4/1
Q503A
2N7002DW
SOT363
FB_PD_DIS
R558 200K/4/1
R551 243K/4/1
C533 1n/4/X7R/50V/K
Q503B
C534 1p/4/NPO/50V/C
FB_PD_DIS_R
R537 402/4/1
PS_FBVDDQ_REFIN
GND
IN
OUT

ASSEMBLY
PAGE DETAIL

<ASSEMBLY_DESCRIPTION>
PS: FBVDDQ

ALL NVIDIA DESIGN SPECIFICATIONS, REFERENCE SPECIFICATIONS, REFERENCE BOARDS, FILES, DRAWINGS, DIAGNOSTICS, LISTS AND OTHER DOCUMENTS OR INFORMATION (TOGETHER AND SEPARATELY, 'MATERIALS') ARE BEING PROVIDED 'AS IS'. THE MATERIALS MAY CONTAIN KNOWN AND UNKNOWN VIOLATIONS OR DEVIATIONS OF INDUSTRY STANDARDS AND SPECIFICATIONS. NVIDIA MAKES NO WARRANTIES, EXPRESSED, IMPLIED, STATUTORY OR OTHERWISE WITH RESPECT TO THE MATERIALS OR OTHERWISE, AND EXPRESSLY DISCLAIMS ALL IMPLIED WARRANTIES INCLUDING, WITHOUT LIMITATION, THE WARRANTIES OF DESIGN, OF NONINFRINGEMENT, MERCHANTABILITY OR FITNESS FOR A PARTICULAR PURPOSE, OR ARISING FROM A COURSE OF DEALING, TRADE USAGE, TRADE PRACTICE, OR INDUSTRY STANDARDS.

GIGABYTE

Title
PCIE

Size Custom
Document Number GV-N3060VISION OC-12GD
Rev 1.01

Page33: PS: FBVDDQ PH2

FBVDD PH2 INPUT ANTI-BACKDRIVE

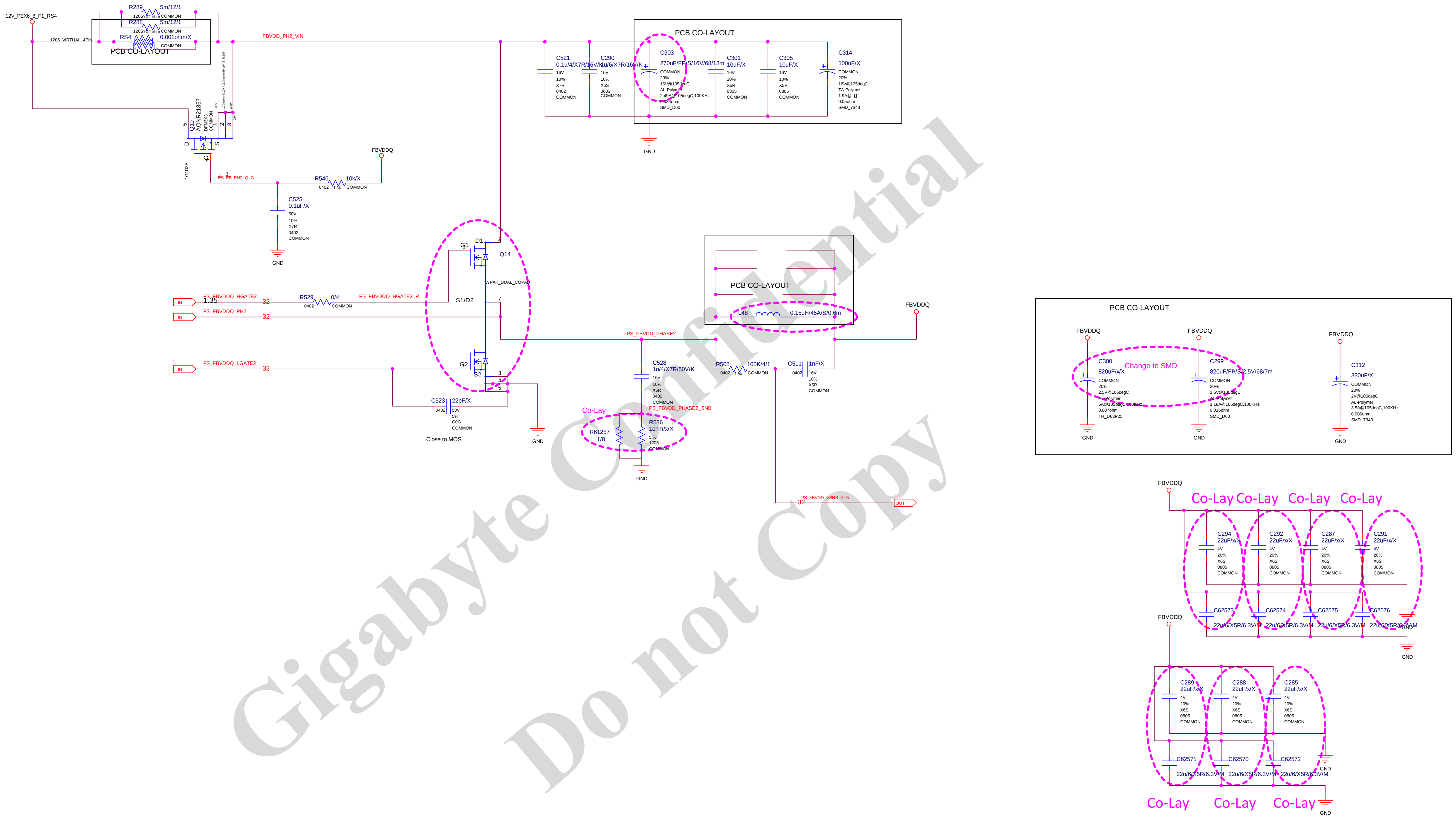
12V_PEX6_8_F1_RS4
R289 5m/12/1 1206 COMMON
R288 5m/12/1 1206 COMMON
RS4 0.001ohm/X 1206_VIRTUAL_4PIN COMMON
PCB CO-LAYOUT
FBVDD_PH2_VIN
Q10 AONR21357
PS_FB_PH2_Q_G
R546 10k/X 0402 COMMON
FBVDDQ
C525 0.1uF/X 50V 10% X7R 0402 COMMON
GND
C521 0.1u/4/X7R/16V/K 16V 10% X7R 0402 COMMON
C290 1u/6/X7R/16V/K 16V 10% X6S 0603 COMMON
C303 270uF/FP/S/16V/68/13m COMMON 20% AL-Polymer SMD_D60
C301 10uF/X 16V 10% X5R 0805 COMMON
C305 10uF/X 16V 10% X5R 0805 COMMON
C314 100uF/X COMMON 20% 16V@125degC TA-Polymer 0.05ohm SMD_7343
Q14 WPAK_DUAL_COPAD D1 G1 S1/D2 G2 S2
PS_FBVDDQ_HGATE2 1.35
R529 0/4 0402 COMMON
PS_FBVDDQ_HGATE2_R
PS_FBVDDQ_PH2
PS_FBVDDQ_LGATE2
IN
C523 22pF/X 50V 5% C0G COMMON
Close to MOS
PS_FBVDDQ_PHASE2
C528 1n/4/X7R/50V/K 16V 10% X5R 0402 COMMON
PS_FBVDDQ_PHASE2_SNB
Co-Lay
R61257 1/8
R536 1ohm/x/X 5% 1206 COMMON
L48 0.15uH/45A/S/0.6m
R508 100K/4/1 0402 COMMON
C511 1nF/X 0402 16V 10% X5R COMMON
PS_FBVDD_VINS_RTN OUT
C300 820uF/x/X COMMON 20% 2.5V@105degC AL-Polymer TH_D63P25
Change to SMD
C299 820uF/FP/S/2.5V/68/7m COMMON 20% AL-Polymer SMD_D60
C312 330uF/X COMMON 20% 2V@105degC AL-Polymer 0.006ohm SMD_7343
Co-Lay Co-Lay Co-Lay Co-Lay
C294 22uF/x/X 4V 20% X6S 0805 COMMON
C292 22uF/x/X 4V 20% X6S 0805 COMMON
C287 22uF/x/X 4V 20% X6S 0805 COMMON
C291 22uF/x/X 4V 20% X6S 0805 COMMON
C62573 C62574 C62575 C62576 22u/6/X5R/6.3V/M
C289 22uF/x/X 4V 20% X6S 0805 COMMON
C288 22uF/x/X 4V 20% X6S 0805 COMMON
C285 22uF/x/X 4V 20% X6S 0805 COMMON
C62571 C62570 C62572 22u/6/X5R/6.3V/M
Co-Lay Co-Lay Co-Lay

ASSEMBLY <ASSEMBLY_DESCRIPTION>
PAGE DETAIL PS: FBVDDQ PH2

ALL NVIDIA DESIGN SPECIFICATIONS, REFERENCE SPECIFICATIONS, REFERENCE BOARDS, FILES, DRAWINGS, DIAGNOSTICS, LISTS AND OTHER DOCUMENTS OR INFORMATION (TOGETHER AND SEPARATELY, 'MATERIALS') ARE BEING PROVIDED 'AS IS'. THE MATERIALS MAY CONTAIN KNOWN AND UNKNOWN VIOLATIONS OR DEVIATIONS OF INDUSTRY STANDARDS AND SPECIFICATIONS. NVIDIA MAKES NO WARRANTIES, EXPRESSED, IMPLIED, STATUTORY OR OTHERWISE WITH RESPECT TO THE MATERIALS OR OTHERWISE, AND EXPRESSLY DISCLAIMS ALL IMPLIED WARRANTIES INCLUDING, WITHOUT LIMITATION, THE WARRANTIES OF DESIGN, OF NONINFRINGEMENT, MERCHANTABILITY OR FITNESS FOR A PARTICULAR PURPOSE, OR ARISING FROM A COURSE OF DEALING, TRADE USAGE, TRADE PRACTICE, OR INDUSTRY STANDARDS.

GIGABYTE
Title
PCIE
Size Custom
Document Number GV-N3060VISION OC-12GD
Rev 1.01
Date: Thursday, January 14, 2021
Sheet 33 of 54

Page34: PS: NVVDD CTR

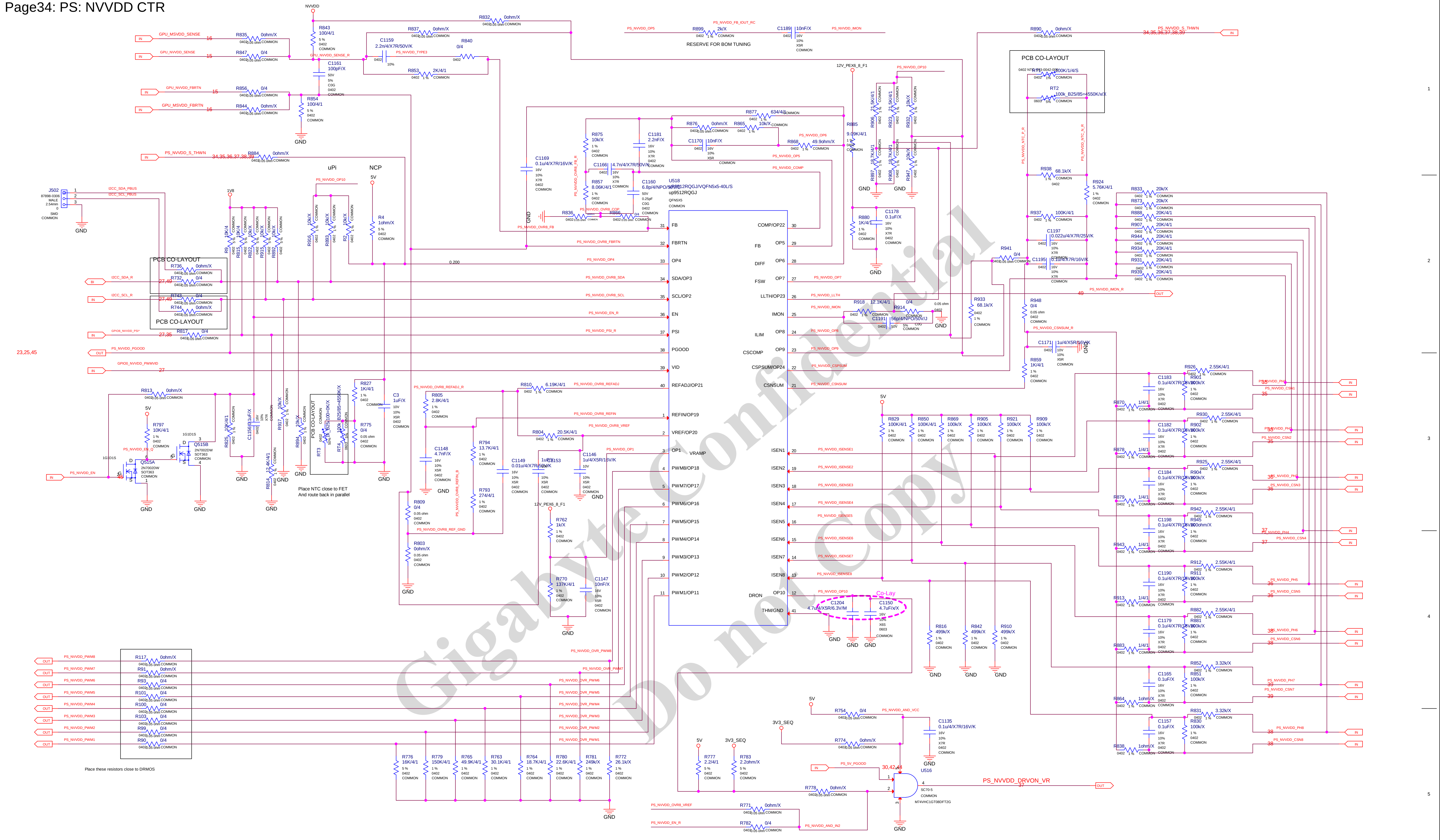
NVVDD
GPU_MSVDD_SENSE 16
GPU_NVVDD_SENSE 15
GPU_NVVDD_FBRTN 15
GPU_MSVDD_FBRTN 16
R835 0ohm/X
R847 0/4
R856 0/4
R844 0ohm/X
R843 100/4/1
GPU_NVVDD_SENSE_R
C1161 100pF/X
R854 100/4/1
R837 0ohm/X
C1159 2.2n/4/X7R/50V/K
PS_NVVDD_TYPE3
R840 0/4
R853 2K/4/1
R832 0ohm/X
PS_NVVDD_S_THWN 34,35,36,37,38,39
R884 0ohm/X
J502 87898-0306 MALE 2.54mm SMD
I2CC_SDA_PBUS
I2CC_SCL_PBUS
1V8
R9 10K/4
R815 10K/4
R822 10k/X
R915 10k/X
R892 10k/X
uPi
NCP
PS_NVVDD_OP10
5V
R916 10k/X
R893 10k/X
R2 10k/X
R4 1ohm/X
PCB CO-LAYOUT
R736 0ohm/X
R732 0/4
R743 0/4
R744 0ohm/X
I2CC_SDA_R 27,49
I2CC_SCL_R 27,49
GPIO6_NVVDD_PSI* 27,35
R817 0/4
PS_NVVDD_PGOOD 23,25,45
GPIO0_NVVDD_PWMVID 27
0.200
R813 0ohm/X
R797 10K/4/1
PS_NVVDD_EN_Q
PS_NVVDD_EN 45
Q515A 2N7002DW SOT363
Q515B 2N7002DW SOT363
R825 10K/4/1
C1156 0.1uF/X
R917 10k/X
R814 12.4K/4/1
R894 10k/X
RT3
RT4 100k_B25/85=4550K/X
B25/100=0K/X
R827 1K/4/1
R775 0/4
C3 1uF/X
Place NTC close to FET
And route back in parallel
PS_NVVDD_OVR8_REFADJ_R
R805 2.8K/4/1
C1148 4.7nF/X
R794 13.7K/4/1
R793 274/4/1
PS_NVVDD_OVR8_REFIN_B
PS_NVVDD_OVR8_REF_GND
R809 0/4
R803 0ohm/X
PS_NVVDD_PWM1 ... PS_NVVDD_PWM8
R117 0ohm/X
R91 0ohm/X
R93 0/4
R101 0/4
R100 0/4
R103 0/4
R99 0/4
R90 0/4
Place these resistors close to DRMOS
R776 16K/4/1
R779 150K/4/1
R765 49.9K/4/1
R763 30.1K/4/1
R764 18.7K/4/1
R780 22.6K/4/1
R781 249k/X
R772 26.1k/X
PS_NVVDD_OVR_PWM1 ... PS_NVVDD_OVR_PWM8
C1169 0.1u/4/X7R/16V/K
R875 10k/X
C1181 2.2nF/X
C1166 4.7n/4/X7R/50V/K
R857 8.06K/4/1
C1160 6.8p/4/NPO/50V/C
PS_NVVDD_OVR8_FB_R
PS_NVVDD_OVR8_COP
R836
R866 0/4
PS_NVVDD_OVR8_FB
R876 0ohm/X
R865 10k/X
R877 634/4/1
C1170 10nF/X
R868 49.9ohm/X
PS_NVVDD_OP6
PS_NVVDD_OP5
PS_NVVDD_COMP
U518 uP9512RQGJ/VQFN5x5-40L/S up9512RQGJ QFN5X5
FB 31
FBRTN 32
OP4 33
SDA/OP3 34
SCL/OP2 35
EN 36
PSI 37
PGOOD 38
VID 39
REFADJ/OP21 40
REFIN/OP19 1
VREF/OP20 2
OP1 3 VRAMP
PWM8/OP18 4
PWM7/OP17 5
PWM6/OP16 6
PWM5/OP15 7
PWM4/OP14 8
PWM3/OP13 9
PWM2/OP12 10
PWM1/OP11 11
COMP/OP22 30
FB OP5 29
DIFF OP6 28
FSW OP7 27
LLTH/OP23 26
IMON 25
ILIM OP8 24
CSCOMP OP9 23
CSPSUM/OP24 22
CSNSUM 21
ISEN1 20
ISEN2 19
ISEN3 18
ISEN4 17
ISEN5 16
ISEN6 15
ISEN7 14
ISEN8 13
DRON OP10 12
THM/GND 41
PS_NVVDD_OVR8_FBRTN
PS_NVVDD_OP4
PS_NVVDD_OVR8_SDA
PS_NVVDD_OVR8_SCL
PS_NVVDD_EN_R
PS_NVVDD_PSI_R
R810 6.19K/4/1
PS_NVVDD_OVR8_REFADJ
PS_NVVDD_OVR8_REFIN
PS_NVVDD_OVR8_VREF
R804 20.5K/4/1
PS_NVVDD_OP1
C1149 0.01u/4/X7R/50V/K
C1153 1uF/X
C1146 1u/4/X5R/16V/K
12V_PEX6_8_F1
R762 1k/X
R770 137K/4/1
C1147 10nF/X
PS_NVVDD_OP5
R899 2k/X
PS_NVVDD_FB_IOUT_RC
C1189 10nF/X
PS_NVVDD_IMON
RESERVE FOR BOM TUNING
R885 9.09K/4/1
R906 21.5K/4/1
R923 21.5K/4/1
R932 10k/X
R897 18.7K/4/1
R908 18.7K/4/1
R947 10k/X
R880 1K/4/1
C1178 0.1uF/X
PS_NVVDD_OP7
PS_NVVDD_LLTH
R918 12.1K/4/1
R914 0/4
C1191 56p/4/NPO/50V/J
PS_NVVDD_OP8
PS_NVVDD_OP9
PS_NVVDD_CSPSUM
PS_NVVDD_CSNSUM
PS_NVVDD_ISENSE1 ... PS_NVVDD_ISENSE8
R829 100K/4/1
R850 100K/4/1
R869 100k/X
R905 100k/X
R921 100k/X
R909 100k/X
Co-Lay
C1204 4.7u/4/X5R/6.3V/M
C1150 4.7uF/X/X
R816 499k/X
R842 499k/X
R910 499k/X
R754 0/4
PS_NVVDD_AND_VCC
3V3_SEQ
R774 0ohm/X
C1135 0.1u/4/X7R/16V/K
R777 2.2/4/1
R783 2.2ohm/X
PS_5V_PGOOD 30,42,44
U516 SC70-5 M74VHC1GT08DFT2G
R778 0ohm/X
PS_NVVDD_DRVON_VR 37
R771 0ohm/X
R782 0/4
PS_NVVDD_AND_IN2
R890 0ohm/X
RT1 100K/1/4/S 0402 NTC 093-0042-000
RT2 100k_B25/85=4550K/x/X
PS_NVVDD_NTC_P_R
PS_NVVDD_NTC_N_R
R938 68.1k/X
R924 5.76K/4/1
R937 100K/4/1
C1197 0.022u/4/X7R/25V/K
R941 0/4
C1195 0.1u/4/X7R/16V/K
R833 20k/X
R873 20k/X
R888 20K/4/1
R907 20K/4/1
R944 20K/4/1
R934 20K/4/1
R931 20K/4/1
R939 20K/4/1
PS_NVVDD_IMON_R 49
R933 68.1k/X
R948 0/4
PS_NVVDD_CSNSUM_R
C1171 1u/4/X5R/16V/K
R859 1K/4/1
R926 2.55K/4/1
C1183 0.1u/4/X7R/16V/K
R901 100k/X
R870 1/4/1
PS_NVVDD_PH1 35
PS_NVVDD_CSN1 35
R930 2.55K/4/1
C1182 0.1u/4/X7R/16V/K
R902 100k/X
R878 1/4/1
PS_NVVDD_PH2 35
PS_NVVDD_CSN2 35
R925 2.55K/4/1
C1184 0.1u/4/X7R/16V/K
R904 100k/X
R879 1/4/1
PS_NVVDD_PH3 36
PS_NVVDD_CSN3 36
R942 2.55K/4/1
C1198 0.1u/4/X7R/16V/K
R945 100ohm/X
R943 1/4/1
PS_NVVDD_PH4 37
PS_NVVDD_CSN4 37
R912 2.55K/4/1
C1190 0.1u/4/X7R/16V/K
R911 100k/X
R913 1/4/1
PS_NVVDD_PH5 36
PS_NVVDD_CSN5 36
R882 2.55K/4/1
C1179 0.1u/4/X7R/16V/K
R881 100k/X
R883 1/4/1
PS_NVVDD_PH6 38
PS_NVVDD_CSN6 38
R852 3.32k/X
C1165 0.1uF/X
R851 100k/X
R864 1ohm/X
PS_NVVDD_PH7 39
PS_NVVDD_CSN7 39
R831 3.32k/X
C1157 0.1uF/X
R830 100k/X
R838 1ohm/X
PS_NVVDD_PH8 38
PS_NVVDD_CSN8 38
GND
IN
OUT
BI

ASSEMBLY
PAGE DETAIL

<ASSEMBLY_DESCRIPTION>
PS: NVVDD CNTL

ALL NVIDIA DESIGN SPECIFICATIONS, REFERENCE SPECIFICATIONS, REFERENCE BOARDS, FILES, DRAWINGS, DIAGNOSTICS, LISTS AND OTHER DOCUMENTS OR INFORMATION (TOGETHER AND SEPARATELY, 'MATERIALS') ARE BEING PROVIDED 'AS IS'. THE MATERIALS MAY CONTAIN KNOWN AND UNKNOWN VIOLATIONS OR DEVIATIONS OF INDUSTRY STANDARDS AND SPECIFICATIONS. NVIDIA MAKES NO WARRANTIES, EXPRESSED, IMPLIED, STATUTORY OR OTHERWISE WITH RESPECT TO THE MATERIALS OR OTHERWISE, AND EXPRESSLY DISCLAIMS ALL IMPLIED WARRANTIES INCLUDING, WITHOUT LIMITATION, THE WARRANTIES OF DESIGN, OF NONINFRINGEMENT, MERCHANTABILITY OR FITNESS FOR A PARTICULAR PURPOSE, OR ARISING FROM A COURSE OF DEALING, TRADE USAGE, TRADE PRACTICE, OR INDUSTRY STANDARDS.

GIGABYTE

Title
PCIE

Size Custom
Document Number GV-N3060VISION OC-12GD
Rev 1.01

Date: Thursday, January 14, 2021
Sheet 34 of 54

Page35: PS: NVVDD PH1 & 2

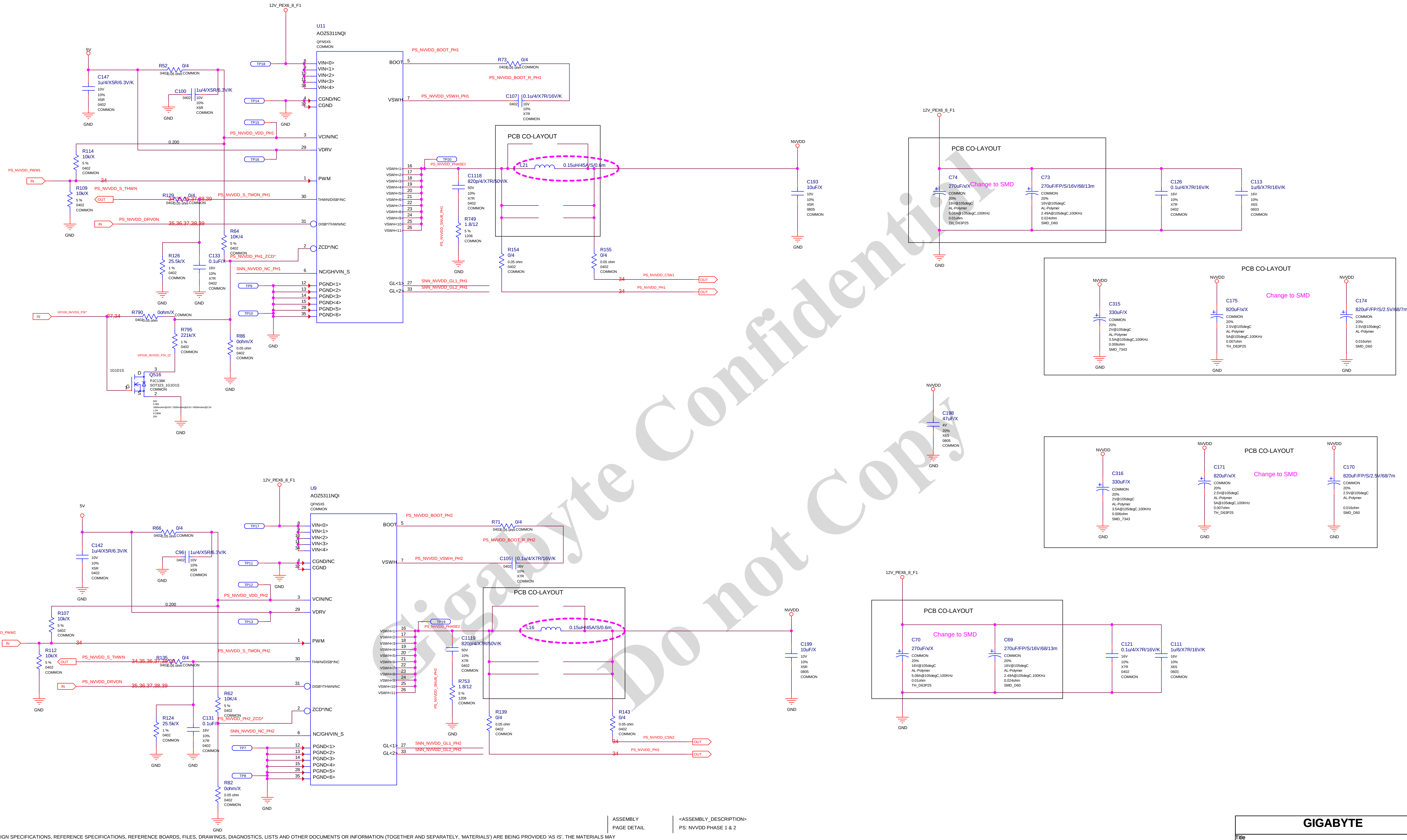

12V_PEX6_8_F1
U11
AOZ5311NQI
QFN5X5
COMMON
5V
R52 0/4 0402 0.05 ohm COMMON
C147 1u/4/X5R/6.3V/K 10V 10% X5R 0402 COMMON
C100 1u/4/X5R/6.3V/K 0402 10V 10% X5R COMMON
TP18
TP14
TP15
TP16
VIN<0> VIN<1> VIN<2> VIN<3> VIN<4>
8 9 10 11 34
CGND/NC CGND
4 32
PS_NVVDD_VDD_PH1
VCIN/NC 3
0.200
VDRV 29
R114 10k/X 5 % 0402 COMMON
PS_NVVDD_PWM1
IN
34
PWM 1
R109 10k/X 5 % 0402 COMMON
PS_NVVDD_S_THWN
OUT
R129 0/4 0402 0.05 ohm COMMON
34,35,36,37,38,39
PS_NVVDD_S_TMON_PH1
THWN/DISB*/NC 30
PS_NVVDD_DRVON
35,36,37,38,39
DISB*/THWN/NC 31
R64 10K/4 5 % 0402 COMMON
ZCD*/NC 2
PS_NVVDD_PH1_ZCD*
R126 25.5k/X 1 % 0402 COMMON
C133 0.1uF/X 16V 10% X7R 0402 COMMON
SNN_NVVDD_NC_PH1
NC/GH/VIN_S 6
TP9
TP10
PGND<1> PGND<2> PGND<3> PGND<4> PGND<5> PGND<6>
12 13 14 15 28 35
GPIO6_NVVDD_PSI*
27,34
R790 0ohm/X 0402 0.05 ohm COMMON
R795 221k/X 1 % 0402 COMMON
R86 0ohm/X 0.05 ohm 0402 COMMON
GPIO6_NVVDD_PSI_Q*
1G1D1S
Q516 PJC138K SOT323_1G1D1S COMMON
D G S 3 1 2
50V 0.36A 1600mohm@10V / 2500mohm@4.5V / 4500mohm@2.5V 1.2A 0.236W 20V
GND
BOOT 5
PS_NVVDD_BOOT_PH1
R73 0/4 0402 0.05 ohm COMMON
PS_NVVDD_BOOT_R_PH1
VSWH 7
PS_NVVDD_VSWH_PH1
C107 0.1u/4/X7R/16V/K 0402 16V 10% X7R COMMON
VSWH<1> VSWH<2> VSWH<3> VSWH<4> VSWH<5> VSWH<6> VSWH<7> VSWH<8> VSWH<9> VSWH<10> VSWH<11>
16 17 18 19 20 21 22 23 24 25 26
TP20
PS_NVVDD_PHASE1
C1118 820p/4/X7R/50V/K 50V 10% X7R 0402 COMMON
PS_NVVDD_SNUB_PH1
R749 1.8/12 5 % 1206 COMMON
GL<1> 27 GL<2> 33
SNN_NVVDD_GL1_PH1
SNN_NVVDD_GL2_PH1
PCB CO-LAYOUT
L21 0.15uH/45A/S/0.6m
R154 0/4 0.05 ohm 0402 COMMON
R155 0/4 0.05 ohm 0402 COMMON
PS_NVVDD_CSN1
PS_NVVDD_PH1
34
OUT
NVVDD
C193 10uF/X 10V 10% X5R 0805 COMMON
C74 270uF/x/X COMMON 20% 16V@105degC AL-Polymer 5.08A@105degC,100KHz 0.01ohm TH_D63P25
Change to SMD
C73 270uF/FP/S/16V/68/13m COMMON 20% 16V@105degC AL-Polymer 2.49A@105degC,100KHz 0.024ohm SMD_D60
C126 0.1u/4/X7R/16V/K 16V 10% X7R 0402 COMMON
C113 1u/6/X7R/16V/K 16V 10% X6S 0603 COMMON
C315 330uF/X COMMON 20% 2V@105degC AL-Polymer 3.5A@105degC,100KHz 0.006ohm SMD_7343
C175 820uF/x/X COMMON 20% 2.5V@105degC AL-Polymer 5A@105degC,100KHz 0.007ohm TH_D63P25
C174 820uF/FP/S/2.5V/68/7m COMMON 20% 2.5V@105degC AL-Polymer 0.016ohm SMD_D60
C198 47uF/X 4V 20% X6S 0805 COMMON
C316 330uF/X COMMON 20% 2V@105degC AL-Polymer 3.5A@105degC,100KHz 0.006ohm SMD_7343
C171 820uF/x/X COMMON 20% 2.5V@105degC AL-Polymer 5A@105degC,100KHz 0.007ohm TH_D63P25
C170 820uF/FP/S/2.5V/68/7m COMMON 20% 2.5V@105degC AL-Polymer 0.016ohm SMD_D60
U9
AOZ5311NQI
QFN5X5
COMMON
R66 0/4 0402 0.05 ohm COMMON
C142 1u/4/X5R/6.3V/K 10V 10% X5R 0402 COMMON
C96 1u/4/X5R/6.3V/K 0402 10V 10% X5R COMMON
TP17
TP11
TP12
TP13
PS_NVVDD_VDD_PH2
R107 10k/X 5 % 0402 COMMON
PS_NVVDD_PWM2
R112 10k/X 5 % 0402 COMMON
R135 0/4 0402 0.05 ohm COMMON
PS_NVVDD_S_TMON_PH2
R62 10K/4 5 % 0402 COMMON
PS_NVVDD_PH2_ZCD*
R124 25.5k/X 1 % 0402 COMMON
C131 0.1uF/X 16V 10% X7R 0402 COMMON
SNN_NVVDD_NC_PH2
TP7
TP8
R82 0ohm/X 0.05 ohm 0402 COMMON
PS_NVVDD_BOOT_PH2
R71 0/4 0402 0.05 ohm COMMON
PS_NVVDD_BOOT_R_PH2
PS_NVVDD_VSWH_PH2
C105 0.1u/4/X7R/16V/K 0402 16V 10% X7R COMMON
TP19
PS_NVVDD_PHASE2
C1119 820p/4/X7R/50V/K 50V 10% X7R 0402 COMMON
PS_NVVDD_SNUB_PH2
R753 1.8/12 5 % 1206 COMMON
SNN_NVVDD_GL1_PH2
SNN_NVVDD_GL2_PH2
L16 0.15uH/45A/S/0.6m
R139 0/4 0.05 ohm 0402 COMMON
R143 0/4 0.05 ohm 0402 COMMON
PS_NVVDD_CSN2
PS_NVVDD_PH2
C199 10uF/X 10V 10% X5R 0805 COMMON
C70 270uF/x/X COMMON 20% 16V@105degC AL-Polymer 5.08A@105degC,100KHz 0.01ohm TH_D63P25
C69 270uF/FP/S/16V/68/13m COMMON 20% 16V@105degC AL-Polymer 2.49A@105degC,100KHz 0.024ohm SMD_D60
C121 0.1u/4/X7R/16V/K 16V 10% X7R 0402 COMMON
C111 1u/6/X7R/16V/K 16V 10% X6S 0603 COMMON

ASSEMBLY	<ASSEMBLY_DESCRIPTION>
PAGE DETAIL	PS: NVVDD PHASE 1 & 2

ALL NVIDIA DESIGN SPECIFICATIONS, REFERENCE SPECIFICATIONS, REFERENCE BOARDS, FILES, DRAWINGS, DIAGNOSTICS, LISTS AND OTHER DOCUMENTS OR INFORMATION (TOGETHER AND SEPARATELY, 'MATERIALS') ARE BEING PROVIDED 'AS IS'. THE MATERIALS MAY CONTAIN KNOWN AND UNKNOWN VIOLATIONS OR DEVIATIONS OF INDUSTRY STANDARDS AND SPECIFICATIONS. NVIDIA MAKES NO WARRANTIES, EXPRESSED, IMPLIED, STATUTORY OR OTHERWISE WITH RESPECT TO THE MATERIALS OR OTHERWISE, AND EXPRESSLY DISCLAIMS ALL IMPLIED WARRANTIES INCLUDING, WITHOUT LIMITATION, THE WARRANTIES OF DESIGN, OF NONINFRINGEMENT, MERCHANTABILITY OR FITNESS FOR A PARTICULAR PURPOSE, OR ARISING FROM A COURSE OF DEALING, TRADE USAGE, TRADE PRACTICE, OR INDUSTRY STANDARDS.

GIGABYTE

Title
PCIE

Size: Custom
Document Number: GV-N3060VISION OC-12GD
Rev: 1.01

Date: Thursday, January 14, 2021
Sheet 35 of 54

Page36: PS: NVVDD PH3 & 5

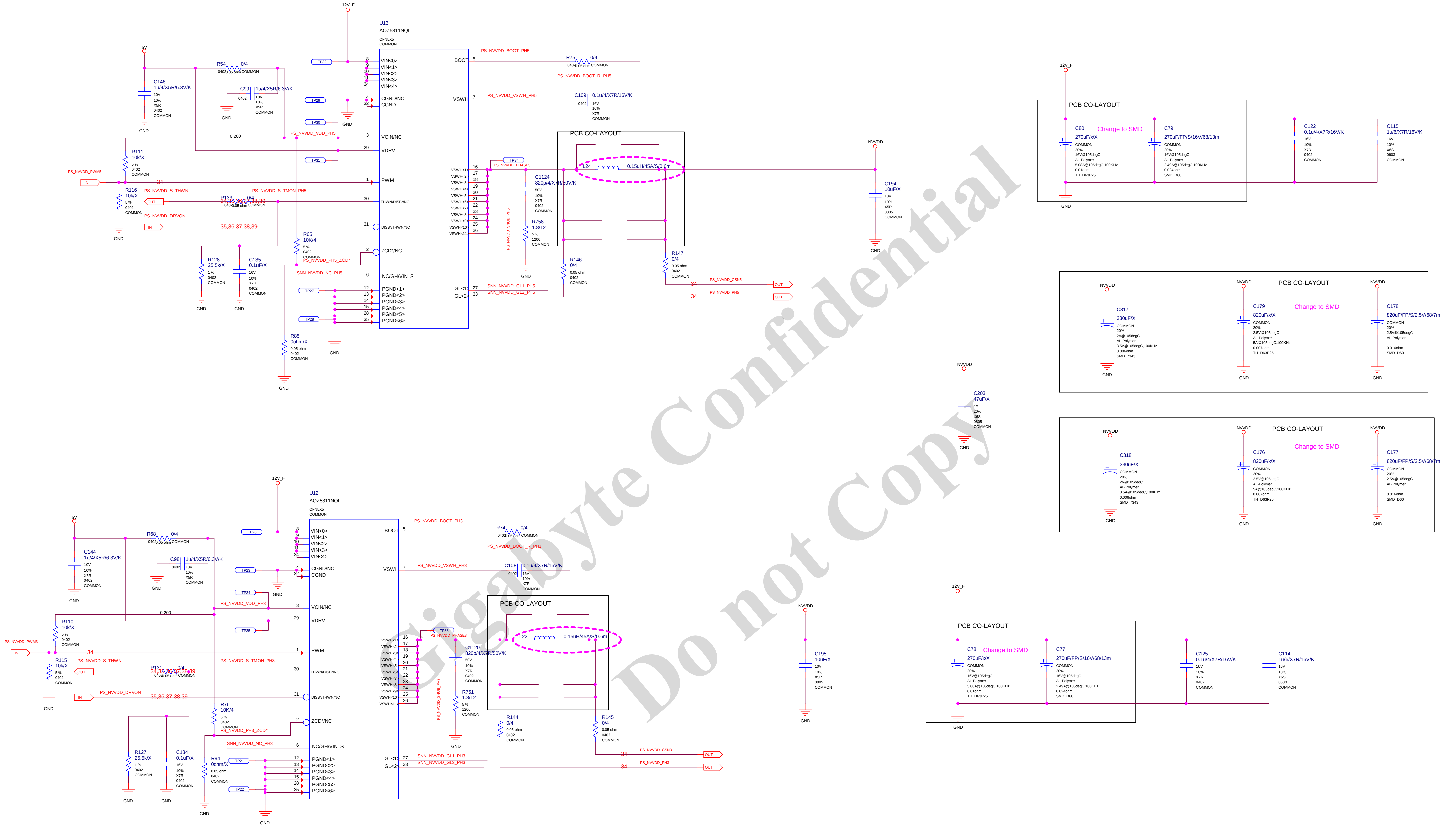

12V_F
U13
AOZ5311NQI
QFN5X5
COMMON
5V
C146
1u/4/X5R/6.3V/K
10V
10%
X5R
0402
COMMON
GND
R54
0/4
0402
0.05 ohm
COMMON
C99
1u/4/X5R/6.3V/K
TP32
TP29
TP30
TP31
VIN<0>
VIN<1>
VIN<2>
VIN<3>
VIN<4>
CGND/NC
CGND
VCIN/NC
VDRV
PWM
THWN/DISB*/NC
DISB*/THWN/NC
ZCD*/NC
NC/GH/VIN_S
PGND<1>
PGND<2>
PGND<3>
PGND<4>
PGND<5>
PGND<6>
BOOT
VSWH
GL<1>
GL<2>
VSWH<1> … VSWH<11>
0.200
PS_NVVDD_VDD_PH5
R111
10k/X
5 %
PS_NVVDD_PWM5
IN
34
R116
10k/X
PS_NVVDD_S_THWN
OUT
R133
0/4
34,35,36,37,38,39
PS_NVVDD_S_TMON_PH5
PS_NVVDD_DRVON
35,36,37,38,39
R65
10K/4
R128
25.5k/X
1 %
C135
0.1uF/X
16V
X7R
PS_NVVDD_PH5_ZCD*
SNN_NVVDD_NC_PH5
TP27
TP28
R85
0ohm/X
PS_NVVDD_BOOT_PH5
R75
0/4
PS_NVVDD_BOOT_R_PH5
PS_NVVDD_VSWH_PH5
C109
0.1u/4/X7R/16V/K
TP34
PS_NVVDD_PHASE5
C1124
820p/4/X7R/50V/K
50V
PS_NVVDD_SNUB_PH5
R758
1.8/12
1206
PCB CO-LAYOUT
L24
0.15uH/45A/S/0.6m
R146
0/4
R147
0/4
PS_NVVDD_CSN5
PS_NVVDD_PH5
SNN_NVVDD_GL1_PH5
SNN_NVVDD_GL2_PH5
NVVDD
C194
10uF/X
0805
C203
47uF/X
4V
20%
X6S
C80
Change to SMD
270uF/x/X
16V@105degC
AL-Polymer
5.08A@105degC,100KHz
0.01ohm
TH_D63P25
C79
270uF/FP/S/16V/68/13m
2.49A@105degC,100KHz
0.024ohm
SMD_D60
C122
0.1u/4/X7R/16V/K
C115
1u/6/X7R/16V/K
X6S
0603
C317
330uF/X
2V@105degC
3.5A@105degC,100KHz
0.006ohm
SMD_7343
C179
820uF/x/X
2.5V@105degC
5A@105degC,100KHz
0.007ohm
C178
820uF/FP/S/2.5V/68/7m
0.016ohm
C318
330uF/X
C176
820uF/x/X
C177
820uF/FP/S/2.5V/68/7m
U12
AOZ5311NQI
C144
1u/4/X5R/6.3V/K
R68
0/4
C98
1u/4/X5R/6.3V/K
TP26
TP23
TP24
TP25
PS_NVVDD_VDD_PH3
R110
10k/X
PS_NVVDD_PWM3
R115
10k/X
R131
0/4
PS_NVVDD_S_TMON_PH3
R76
10K/4
PS_NVVDD_PH3_ZCD*
R127
25.5k/X
C134
0.1uF/X
R94
0ohm/X
SNN_NVVDD_NC_PH3
TP21
TP22
PS_NVVDD_BOOT_PH3
R74
0/4
PS_NVVDD_BOOT_R_PH3
PS_NVVDD_VSWH_PH3
C108
0.1u/4/X7R/16V/K
TP33
PS_NVVDD_PHASE3
C1120
820p/4/X7R/50V/K
PS_NVVDD_SNUB_PH3
R751
1.8/12
L22
0.15uH/45A/S/0.6m
R144
0/4
R145
0/4
PS_NVVDD_CSN3
PS_NVVDD_PH3
SNN_NVVDD_GL1_PH3
SNN_NVVDD_GL2_PH3
C195
10uF/X
C78
270uF/x/X
C77
270uF/FP/S/16V/68/13m
C125
0.1u/4/X7R/16V/K
C114
1u/6/X7R/16V/K

ASSEMBLY
PAGE DETAIL

<ASSEMBLY_DESCRIPTION>
PS: NVVDD PHASE 3 & 5

ALL NVIDIA DESIGN SPECIFICATIONS, REFERENCE SPECIFICATIONS, REFERENCE BOARDS, FILES, DRAWINGS, DIAGNOSTICS, LISTS AND OTHER DOCUMENTS OR INFORMATION (TOGETHER AND SEPARATELY, 'MATERIALS') ARE BEING PROVIDED 'AS IS'. THE MATERIALS MAY CONTAIN KNOWN AND UNKNOWN VIOLATIONS OR DEVIATIONS OF INDUSTRY STANDARDS AND SPECIFICATIONS. NVIDIA MAKES NO WARRANTIES, EXPRESSED, IMPLIED, STATUTORY OR OTHERWISE WITH RESPECT TO THE MATERIALS OR OTHERWISE, AND EXPRESSLY DISCLAIMS ALL IMPLIED WARRANTIES INCLUDING, WITHOUT LIMITATION, THE WARRANTIES OF DESIGN, OF NONINFRINGEMENT, MERCHANTABILITY OR FITNESS FOR A PARTICULAR PURPOSE, OR ARISING FROM A COURSE OF DEALING, TRADE USAGE, TRADE PRACTICE, OR INDUSTRY STANDARDS.

GIGABYTE

Title PCIE		
Size Custom	Document Number GV-N3060VISION OC-12GD	Rev 1.01
Date: Thursday, January 14, 2021	Sheet 36 of 54	

Page37: PS: NVVDD PH4

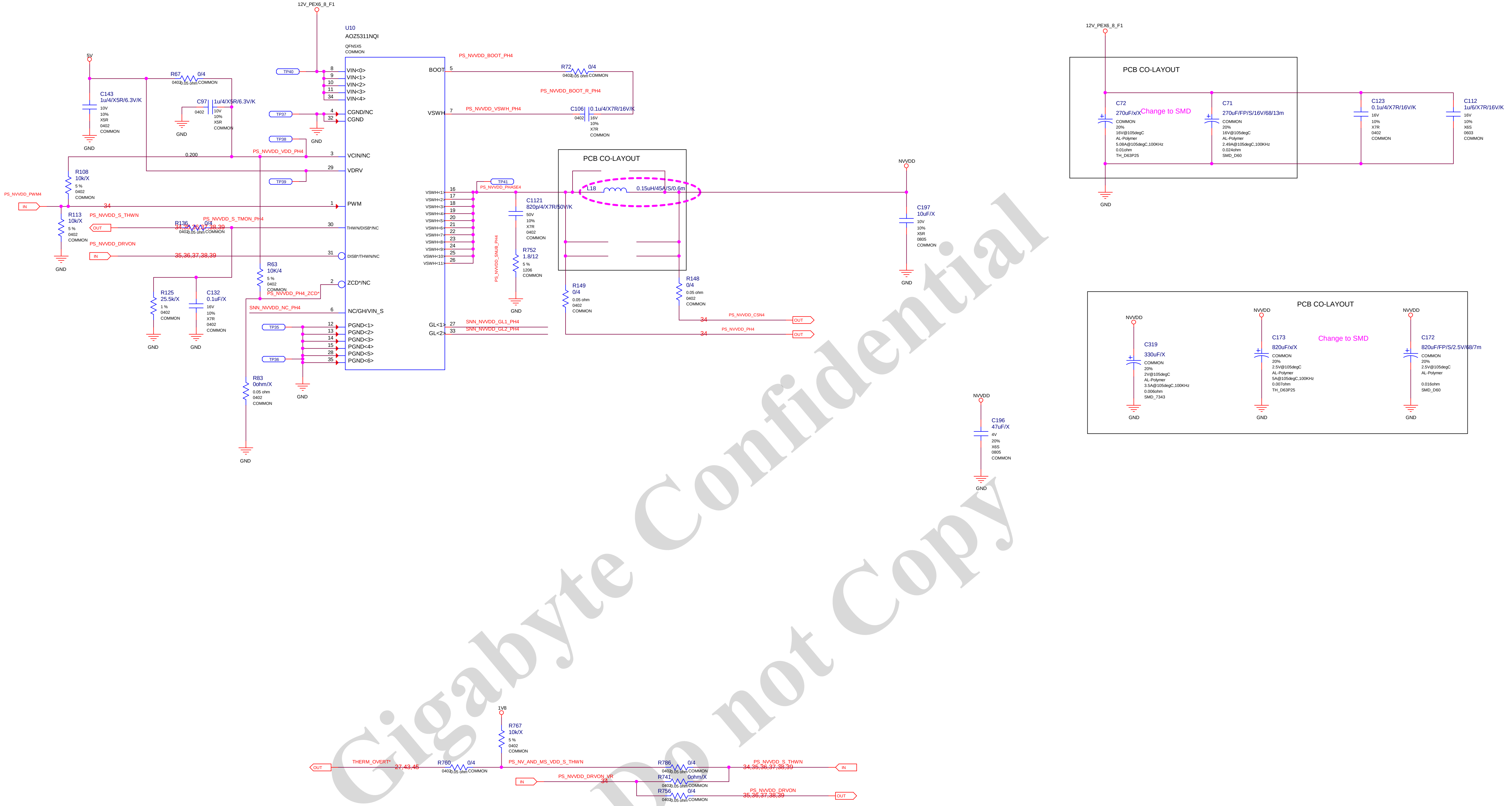

12V_PEX6_8_F1
U10
AOZ5311NQI
QFN5X5
COMMON
VIN<0>
VIN<1>
VIN<2>
VIN<3>
VIN<4>
CGND/NC
CGND
VCIN/NC
VDRV
PWM
THWN/DISB*/NC
DISB*/THWN/NC
ZCD*/NC
NC/GH/VIN_S
PGND<1>
PGND<2>
PGND<3>
PGND<4>
PGND<5>
PGND<6>
BOOT
VSWH
VSWH<1> … VSWH<11>
GL<1>
GL<2>
TP40
TP37
TP38
TP39
TP35
TP36
TP41
5V
R67 0/4
C143 1u/4/X5R/6.3V/K
C97 1u/4/X5R/6.3V/K
R108 10k/X
R113 10k/X
R136 0/4
R125 25.5k/X
C132 0.1uF/X
R63 10K/4
R83 0ohm/X
R72 0/4
C106 0.1u/4/X7R/16V/K
C1121 820p/4/X7R/50V/K
R752 1.8/12
L18 0.15uH/45A/S/0.6m
R149 0/4
R148 0/4
C197 10uF/X
C196 47uF/X
PS_NVVDD_PWM4
PS_NVVDD_S_THWN
PS_NVVDD_S_TMON_PH4
PS_NVVDD_DRVON
PS_NVVDD_VDD_PH4
PS_NVVDD_PH4_ZCD*
SNN_NVVDD_NC_PH4
PS_NVVDD_BOOT_PH4
PS_NVVDD_BOOT_R_PH4
PS_NVVDD_VSWH_PH4
PS_NVVDD_PHASE4
PS_NVVDD_SNUB_PH4
SNN_NVVDD_GL1_PH4
SNN_NVVDD_GL2_PH4
PS_NVVDD_CSN4
PS_NVVDD_PH4
NVVDD
GND
IN
OUT
PCB CO-LAYOUT
C72 270uF/x/X
Change to SMD
C71 270uF/FP/S/16V/68/13m
C123 0.1u/4/X7R/16V/K
C112 1u/6/X7R/16V/K
C319 330uF/X
C173 820uF/x/X
C172 820uF/FP/S/2.5V/68/7m
1V8
R767 10k/X
R760 0/4
R786 0/4
R741 0ohm/X
R750 0/4
THERM_OVERT*
27,43,45
PS_NV_AND_MS_VDD_S_THWN
PS_NVVDD_DRVON_VR
34,35,36,37,38,39
35,36,37,38,39
34

ASSEMBLY	<ASSEMBLY_DESCRIPTION>
PAGE DETAIL	PS: NVVDD PHASE 4

ALL NVIDIA DESIGN SPECIFICATIONS, REFERENCE SPECIFICATIONS, REFERENCE BOARDS, FILES, DRAWINGS, DIAGNOSTICS, LISTS AND OTHER DOCUMENTS OR INFORMATION (TOGETHER AND SEPARATELY, 'MATERIALS') ARE BEING PROVIDED 'AS IS'. THE MATERIALS MAY CONTAIN KNOWN AND UNKNOWN VIOLATIONS OR DEVIATIONS OF INDUSTRY STANDARDS AND SPECIFICATIONS. NVIDIA MAKES NO WARRANTIES, EXPRESSED, IMPLIED, STATUTORY OR OTHERWISE WITH RESPECT TO THE MATERIALS OR OTHERWISE, AND EXPRESSLY DISCLAIMS ALL IMPLIED WARRANTIES INCLUDING, WITHOUT LIMITATION, THE WARRANTIES OF DESIGN, OF NONINFRINGEMENT, MERCHANTABILITY OR FITNESS FOR A PARTICULAR PURPOSE, OR ARISING FROM A COURSE OF DEALING, TRADE USAGE, TRADE PRACTICE, OR INDUSTRY STANDARDS.

GIGABYTE

Title
PCIE

Size Custom
Document Number GV-N3060VISION OC-12GD
Rev 1.01

Date: Thursday, January 14, 2021
Sheet 37 of 54

Page38: PS: NVVDD PH6 & 8

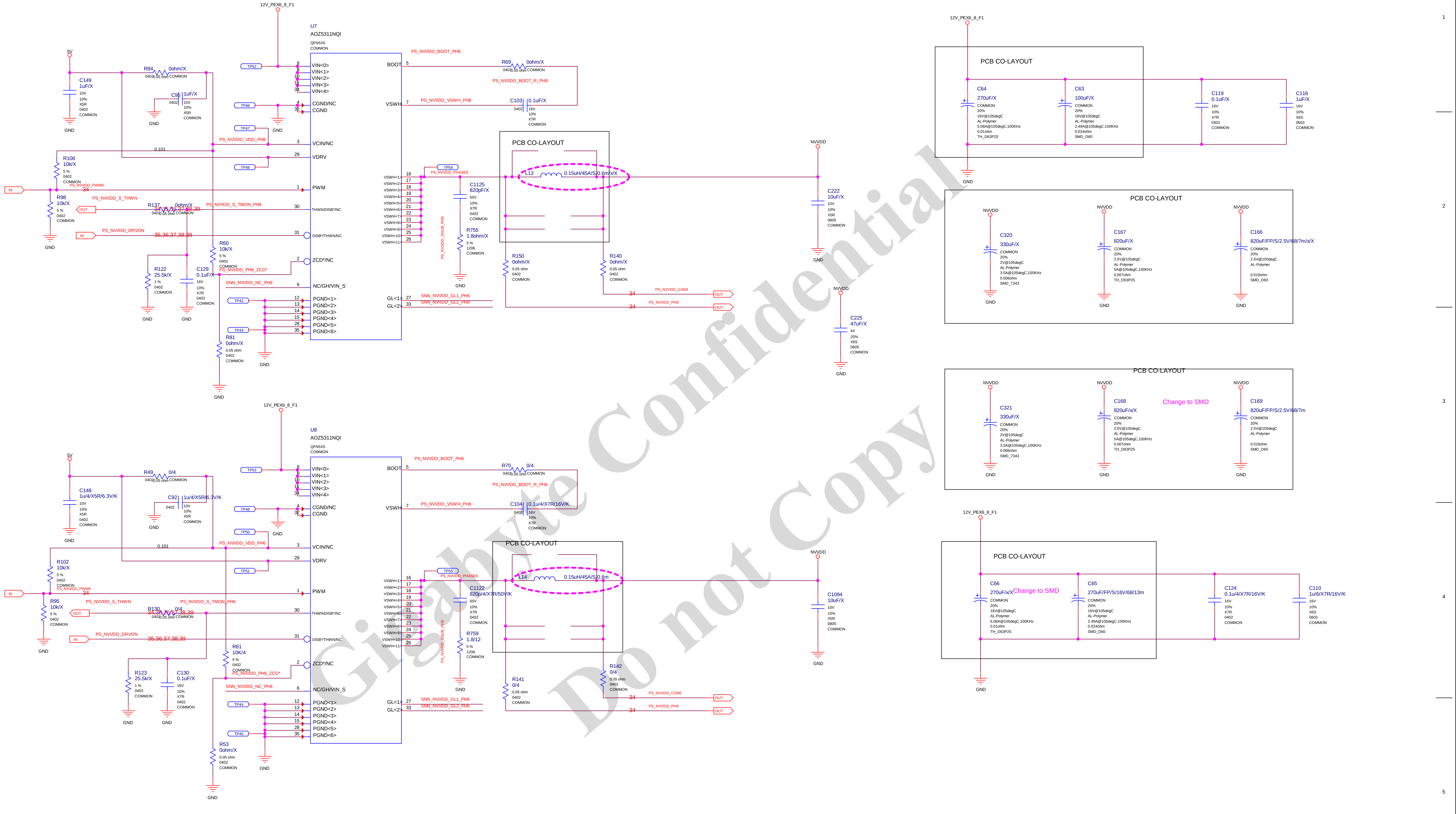

12V_PEX6_8_F1
U7
AOZ5311NQI
QFN5X5
COMMON
VIN<0>
VIN<1>
VIN<2>
VIN<3>
VIN<4>
CGND/NC
CGND
VCIN/NC
VDRV
PWM
THWN/DISB*/NC
DISB*/THWN/NC
ZCD*/NC
NC/GH/VIN_S
PGND<1>
PGND<2>
PGND<3>
PGND<4>
PGND<5>
PGND<6>
BOOT
VSWH
VSWH<1> … VSWH<11>
GL<1>
GL<2>
5V
C149 1uF/X 10V 10% X5R 0402 COMMON
R84 0ohm/X 0402 0.05 ohm COMMON
C95 1uF/X 0402 10V 10% X5R COMMON
R106 10k/X 5 % 0402 COMMON
R98 10k/X 5 % 0402 COMMON
R137 0ohm/X 0402 0.05 ohm COMMON
R122 25.5k/X 1 % 0402 COMMON
C129 0.1uF/X 16V 10% X7R 0402 COMMON
R60 10k/X 5 % 0402 COMMON
R81 0ohm/X 0.05 ohm 0402 COMMON
TP52
TP46
TP47
TP48
TP42
TP43
TP54
0.101
PS_NVVDD_PWM8
PS_NVVDD_S_THWN
PS_NVVDD_S_TMON_PH8
PS_NVVDD_DRVON
PS_NVVDD_VDD_PH8
PS_NVVDD_PH8_ZCD*
SNN_NVVDD_NC_PH8
34
34,35,36,37,38,39
35,36,37,38,39
IN
OUT
GND
PS_NVVDD_BOOT_PH8
R69 0ohm/X 0402 0.05 ohm COMMON
PS_NVVDD_BOOT_R_PH8
PS_NVVDD_VSWH_PH8
C103 0.1uF/X 0402 16V 10% X7R COMMON
PS_NVVDD_PHASE8
C1125 820pF/X 50V 10% X7R 0402 COMMON
R755 1.8ohm/X 5 % 1206 COMMON
PS_NVVDD_SNUB_PH8
PCB CO-LAYOUT
L13 0.15uH/45A/S/0.6m/x/X
R150 0ohm/X 0.05 ohm 0402 COMMON
R140 0ohm/X 0.05 ohm 0402 COMMON
SNN_NVVDD_GL1_PH8
SNN_NVVDD_GL2_PH8
PS_NVVDD_CSN8
PS_NVVDD_PH8
NVVDD
C222 10uF/X 10V 10% X5R 0805 COMMON
C225 47uF/X 4V 20% X6S 0805 COMMON
C64 270uF/X COMMON 20% 16V@105degC AL-Polymer 5.08A@105degC,100KHz 0.01ohm TH_D63P25
C63 100uF/X COMMON 20% 16V@105degC AL-Polymer 2.49A@105degC,100KHz 0.024ohm SMD_D60
C119 0.1uF/X 16V 10% X7R 0402 COMMON
C116 1uF/X 16V 10% X6S 0603 COMMON
C320 330uF/X COMMON 20% 2V@105degC AL-Polymer 3.5A@105degC,100KHz 0.006ohm SMD_7343
C167 820uF/X COMMON 20% 2.5V@105degC AL-Polymer 5A@105degC,100KHz 0.007ohm TH_D63P25
C166 820uF/FP/S/2.5V/68/7m/x/X COMMON 20% 2.5V@105degC AL-Polymer 0.016ohm SMD_D60
C321 330uF/X COMMON 20% 2V@105degC AL-Polymer 3.5A@105degC,100KHz 0.006ohm SMD_7343
C168 820uF/x/X COMMON 20% 2.5V@105degC AL-Polymer 5A@105degC,100KHz 0.007ohm TH_D63P25
Change to SMD
C169 820uF/FP/S/2.5V/68/7m COMMON 20% 2.5V@105degC AL-Polymer 0.016ohm SMD_D60
U8
AOZ5311NQI
QFN5X5
COMMON
C148 1u/4/X5R/6.3V/K 10V 10% X5R 0402 COMMON
R49 0/4 0402 0.05 ohm COMMON
C92 1u/4/X5R/6.3V/K 0402 10V 10% X5R COMMON
R102 10k/X 5 % 0402 COMMON
R95 10k/X 5 % 0402 COMMON
R130 0/4 0402 0.05 ohm COMMON
R123 25.5k/X 1 % 0402 COMMON
C130 0.1uF/X 16V 10% X7R 0402 COMMON
R61 10K/4 5 % 0402 COMMON
R53 0ohm/X 0.05 ohm 0402 COMMON
TP53
TP49
TP50
TP51
TP44
TP45
TP55
PS_NVVDD_PWM6
PS_NVVDD_S_TMON_PH6
PS_NVVDD_VDD_PH6
PS_NVVDD_PH6_ZCD*
SNN_NVVDD_NC_PH6
PS_NVVDD_BOOT_PH6
R70 0/4 0402 0.05 ohm COMMON
PS_NVVDD_BOOT_R_PH6
PS_NVVDD_VSWH_PH6
C104 0.1u/4/X7R/16V/K 0402 16V 10% X7R COMMON
PS_NVVDD_PHASE6
C1122 820p/4/X7R/50V/K 50V 10% X7R 0402 COMMON
R759 1.8/12 5 % 1206 COMMON
PS_NVVDD_SNUB_PH6
L14 0.15uH/45A/S/0.6m
R141 0/4 0.05 ohm 0402 COMMON
R142 0/4 0.05 ohm 0402 COMMON
SNN_NVVDD_GL1_PH6
SNN_NVVDD_GL2_PH6
PS_NVVDD_CSN6
PS_NVVDD_PH6
C1094 10uF/X 10V 10% X5R 0805 COMMON
C66 270uF/x/X COMMON 20% 16V@105degC AL-Polymer 5.08A@105degC,100KHz 0.01ohm TH_D63P25
C65 270uF/FP/S/16V/68/13m COMMON 20% 16V@105degC AL-Polymer 2.49A@105degC,100KHz 0.024ohm SMD_D60
C124 0.1u/4/X7R/16V/K 16V 10% X7R 0402 COMMON
C110 1u/6/X7R/16V/K 16V 10% X6S 0603 COMMON

ASSEMBLY
PAGE DETAIL

<ASSEMBLY_DESCRIPTION>
PS: NVVDD PHASE 6 & 8

ALL NVIDIA DESIGN SPECIFICATIONS, REFERENCE SPECIFICATIONS, REFERENCE BOARDS, FILES, DRAWINGS, DIAGNOSTICS, LISTS AND OTHER DOCUMENTS OR INFORMATION (TOGETHER AND SEPARATELY, 'MATERIALS') ARE BEING PROVIDED 'AS IS'. THE MATERIALS MAY CONTAIN KNOWN AND UNKNOWN VIOLATIONS OR DEVIATIONS OF INDUSTRY STANDARDS AND SPECIFICATIONS. NVIDIA MAKES NO WARRANTIES, EXPRESSED, IMPLIED, STATUTORY OR OTHERWISE WITH RESPECT TO THE MATERIALS OR OTHERWISE, AND EXPRESSLY DISCLAIMS ALL IMPLIED WARRANTIES INCLUDING, WITHOUT LIMITATION, THE WARRANTIES OF DESIGN, OF NONINFRINGEMENT, MERCHANTABILITY OR FITNESS FOR A PARTICULAR PURPOSE, OR ARISING FROM A COURSE OF DEALING, TRADE USAGE, TRADE PRACTICE, OR INDUSTRY STANDARDS.

GIGABYTE

Title
PCIE

Size Custom
Document Number GV-N3060VISION OC-12GD
Rev 1.01

Date: Thursday, January 14, 2021
Sheet 38 of 54

Page39: PS: NVVDD PH7

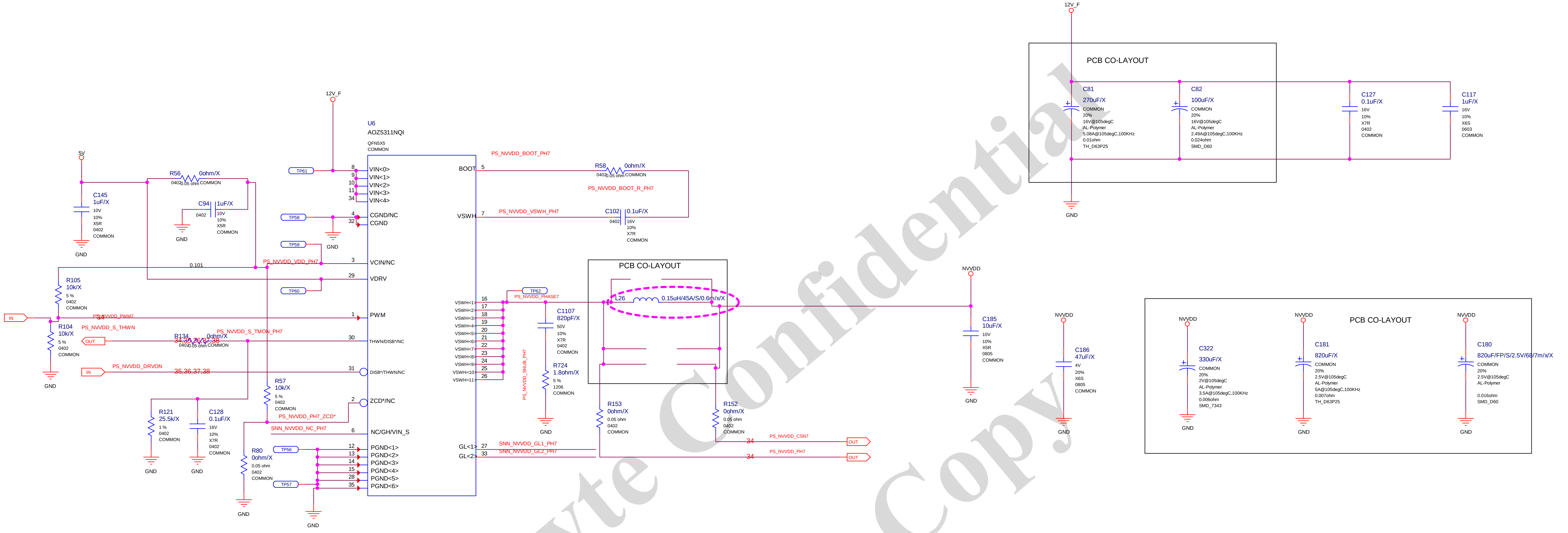
U6
AOZ5311NQI
QFN5X5
COMMON
12V_F
TP61
VIN<0>
VIN<1>
VIN<2>
VIN<3>
VIN<4>
TP58
CGND/NC
CGND
TP59
VCIN/NC
VDRV
TP60
PWM
THWN/DISB*/NC
DISB*/THWN/NC
ZCD*/NC
NC/GH/VIN_S
PGND<1>
PGND<2>
PGND<3>
PGND<4>
PGND<5>
PGND<6>
TP56
TP57
BOOT
VSWH
VSWH<1> … VSWH<11>
GL<1>
GL<2>
5V
C145 1uF/X 10V 10% X5R 0402 COMMON
R56 0ohm/X 0402 0.05 ohm COMMON
C94 1uF/X 0402 10V 10% X5R COMMON
0.101
PS_NVVDD_VDD_PH7
R105 10k/X 5 % 0402 COMMON
IN
PS_NVVDD_PWM7
34
R104 10k/X 5 % 0402 COMMON
PS_NVVDD_S_THWN
OUT
R134 0ohm/X 0402 0.05 ohm COMMON
34,35,36,37,38
PS_NVVDD_S_TMON_PH7
PS_NVVDD_DRVON
35,36,37,38
R57 10k/X 5 % 0402 COMMON
PS_NVVDD_PH7_ZCD*
SNN_NVVDD_NC_PH7
R121 25.5k/X 1 % 0402 COMMON
C128 0.1uF/X 16V 10% X7R 0402 COMMON
R80 0ohm/X 0.05 ohm 0402 COMMON
GND
PS_NVVDD_BOOT_PH7
R58 0ohm/X 0402 0.05 ohm COMMON
PS_NVVDD_BOOT_R_PH7
PS_NVVDD_VSWH_PH7
C102 0.1uF/X 0402 16V 10% X7R COMMON
TP62
PS_NVVDD_PHASE7
PS_NVVDD_SNUB_PH7
C1107 820pF/X 50V 10% X7R 0402 COMMON
R724 1.8ohm/X 5 % 1206 COMMON
PCB CO-LAYOUT
L26 0.15uH/45A/S/0.6m/x/X
R153 0ohm/X 0.05 ohm 0402 COMMON
R152 0ohm/X 0.05 ohm 0402 COMMON
SNN_NVVDD_GL1_PH7
SNN_NVVDD_GL2_PH7
PS_NVVDD_CSN7
PS_NVVDD_PH7
NVVDD
C185 10uF/X 10V 10% X5R 0805 COMMON
C81 270uF/X COMMON 20% 16V@105degC AL-Polymer 5.08A@105degC,100KHz 0.01ohm TH_D63P25
C82 100uF/X COMMON 20% 16V@105degC AL-Polymer 2.49A@105degC,100KHz 0.024ohm SMD_D60
C127 0.1uF/X 16V 10% X7R 0402 COMMON
C117 1uF/X 16V 10% X6S 0603 COMMON
C186 47uF/X 4V 20% X6S 0805 COMMON
C322 330uF/X COMMON 20% 2V@105degC AL-Polymer 3.5A@105degC,100KHz 0.006ohm SMD_7343
C181 820uF/X COMMON 20% 2.5V@105degC AL-Polymer 5A@105degC,100KHz 0.007ohm TH_D63P25
C180 820uF/FP/S/2.5V/68/7m/x/X COMMON 20% 2.5V@105degC AL-Polymer 0.016ohm SMD_D60

ASSEMBLY <ASSEMBLY_DESCRIPTION>
PAGE DETAIL PS: NVVDD PHASE 7

ALL NVIDIA DESIGN SPECIFICATIONS, REFERENCE SPECIFICATIONS, REFERENCE BOARDS, FILES, DRAWINGS, DIAGNOSTICS, LISTS AND OTHER DOCUMENTS OR INFORMATION (TOGETHER AND SEPARATELY, 'MATERIALS') ARE BEING PROVIDED 'AS IS'. THE MATERIALS MAY CONTAIN KNOWN AND UNKNOWN VIOLATIONS OR DEVIATIONS OF INDUSTRY STANDARDS AND SPECIFICATIONS. NVIDIA MAKES NO WARRANTIES, EXPRESSED, IMPLIED, STATUTORY OR OTHERWISE WITH RESPECT TO THE MATERIALS OR OTHERWISE, AND EXPRESSLY DISCLAIMS ALL IMPLIED WARRANTIES INCLUDING, WITHOUT LIMITATION, THE WARRANTIES OF DESIGN, OF NONINFRINGEMENT, MERCHANTABILITY OR FITNESS FOR A PARTICULAR PURPOSE, OR ARISING FROM A COURSE OF DEALING, TRADE USAGE, TRADE PRACTICE, OR INDUSTRY STANDARDS.

GIGABYTE
Title
PCIE
Size Custom
Document Number GV-N3060VISION OC-12GD
Rev 1.01
Date: Thursday, January 14, 2021
Sheet 39 of 54

Page40: BLANK

ASSEMBLY <ASSEMBLY_DESCRIPTION>
PAGE DETAIL Blank

ALL NVIDIA DESIGN SPECIFICATIONS, REFERENCE SPECIFICATIONS, REFERENCE BOARDS, FILES, DRAWINGS, DIAGNOSTICS, LISTS AND OTHER DOCUMENTS OR INFORMATION (TOGETHER AND SEPARATELY, 'MATERIALS') ARE BEING PROVIDED 'AS IS'. THE MATERIALS MAY CONTAIN KNOWN AND UNKNOWN VIOLATIONS OR DEVIATIONS OF INDUSTRY STANDARDS AND SPECIFICATIONS. NVIDIA MAKES NO WARRANTIES, EXPRESSED, IMPLIED, STATUTORY OR OTHERWISE WITH RESPECT TO THE MATERIALS OR OTHERWISE, AND EXPRESSLY DISCLAIMS ALL IMPLIED WARRANTIES INCLUDING, WITHOUT LIMITATION, THE WARRANTIES OF DESIGN, OF NONINFRINGEMENT, MERCHANTABILITY OR FITNESS FOR A PARTICULAR PURPOSE, OR ARISING FROM A COURSE OF DEALING, TRADE USAGE, TRADE PRACTICE, OR INDUSTRY STANDARDS.

GIGABYTE

Title PCIE

Size Custom Document Number GV-N3060VISION OC-12GD Rev 1.01

Date: Thursday, January 14, 2021 Sheet 40 of 54

Page41: INPUT SWITCH RTD3 (12V & 3V3_A SWITCHER)

AND GATE LOGIC

GPIO1	GPIO29	SWITCH	VOUT
0	0	0	12V
0	1	0	12V
1	0	0	12V
1	1	1	3V3A

SWITCH	VOUT
0	VOUT = VIN1
1	VOUT = VIN2

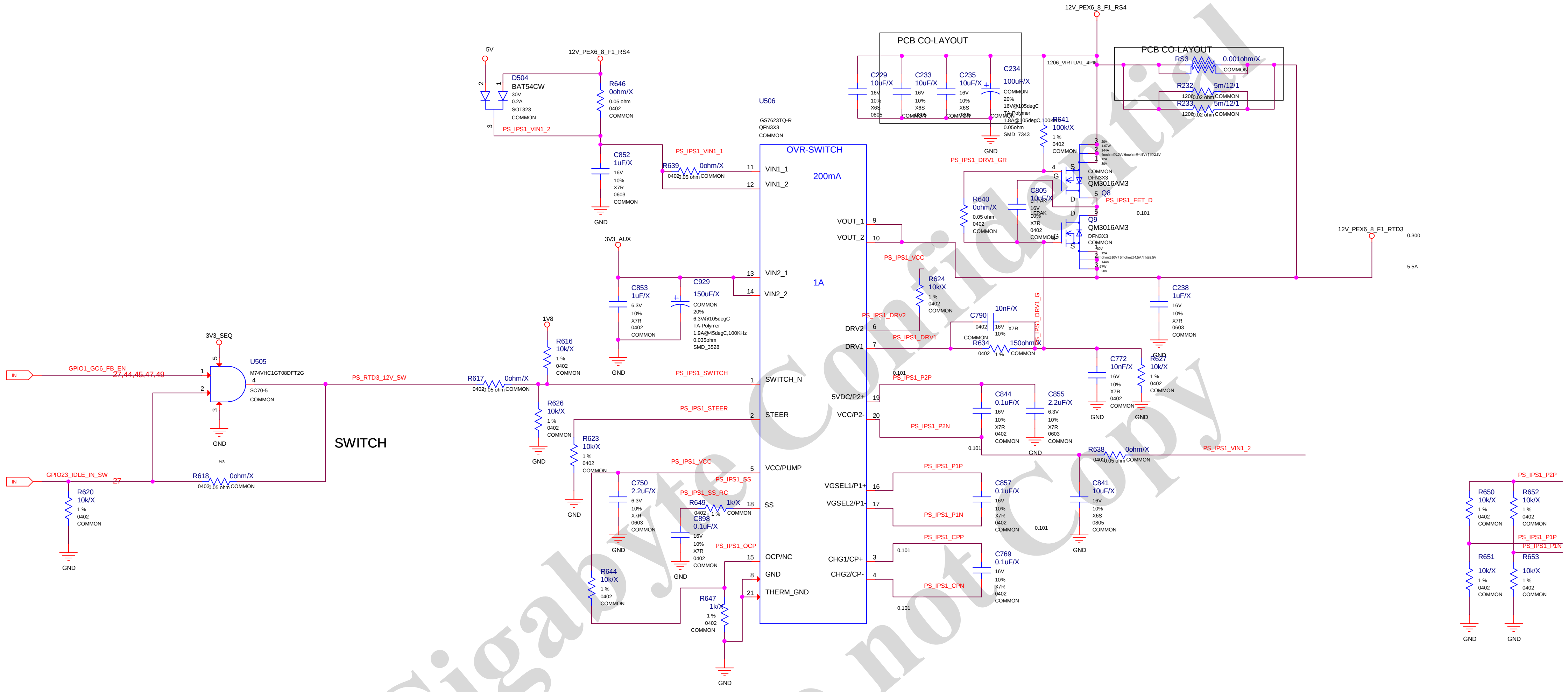
5V
12V_PEX6_8_F1_RS4
D504
BAT54CW
30V
0.2A
SOT323
COMMON
PS_IPS1_VIN1_2
R646
0ohm/X
0.05 ohm
0402
COMMON
C852
1uF/X
16V
10%
X7R
0603
COMMON
GND
PS_IPS1_VIN1_1
R639
0ohm/X
0402
0.05 ohm
COMMON
3V3_AUX
C853
1uF/X
6.3V
10%
X7R
0402
COMMON
C929
150uF/X
COMMON
20%
6.3V@105degC
TA-Polymer
1.9A@45degC,100KHz
0.035ohm
SMD_3528
1V8
R616
10k/X
1 %
0402
COMMON
3V3_SEQ
IN
GPIO1_GC6_FB_EN
27,44,45,47,49
U505
M74VHC1GT08DFT2G
SC70-5
COMMON
PS_RTD3_12V_SW
R617
0ohm/X
0402
0.05 ohm
COMMON
R626
10k/X
1 %
0402
COMMON
R623
10k/X
1 %
0402
COMMON
SWITCH
N/A
IN
GPIO23_IDLE_IN_SW
27
R618
0ohm/X
0402
0.05 ohm
COMMON
R620
10k/X
1 %
0402
COMMON
GND
C750
2.2uF/X
6.3V
10%
X7R
0603
COMMON
PS_IPS1_VCC
PS_IPS1_SS
PS_IPS1_SS_RC
R649
1k/X
0402
1 %
COMMON
C898
0.1uF/X
16V
10%
X7R
0402
COMMON
PS_IPS1_OCP
R644
10k/X
1 %
0402
COMMON
R647
1k/X
1 %
0402
COMMON
PS_IPS1_SWITCH
PS_IPS1_STEER
U506
GS7623TQ-R
QFN3X3
COMMON
OVR-SWITCH
200mA
1A
VIN1_1
VIN1_2
VOUT_1
VOUT_2
VIN2_1
VIN2_2
DRV2
DRV1
SWITCH_N
5VDC/P2+
STEER
VCC/P2-
VCC/PUMP
VGSEL1/P1+
VGSEL2/P1-
SS
OCP/NC
CHG1/CP+
GND
CHG2/CP-
THERM_GND
PCB CO-LAYOUT
C229
10uF/X
16V
10%
X6S
0805
C233
10uF/X
16V
10%
X6S
0805
C235
10uF/X
16V
10%
X6S
0805
C234
100uF/X
COMMON
20%
16V@105degC
TA-Polymer
1.8A@105degC,100KHz
0.05ohm
SMD_7343
12V_PEX6_8_F1_RS4
1206_VIRTUAL_4PIN
PCB CO-LAYOUT
RS3
0.001ohm/X
COMMON
R232
5m/12/1
1206
0.02 ohm
COMMON
R233
5m/12/1
1206
0.02 ohm
COMMON
R641
100k/X
1 %
0402
COMMON
PS_IPS1_DRV1_GR
Q8
QM3016AM3
DFN3X3
COMMON
20V
1.67W
144A
4mohm@10V / 6mohm@4.5V / [ ]@2.5V
12A
30V
PS_IPS1_FET_D
0.101
R640
0ohm/X
0.05 ohm
0402
COMMON
C805
10nF/X
LFPAK
16V
10%
X7R
0402
COMMON
Q9
QM3016AM3
DFN3X3
COMMON
12V_PEX6_8_F1_RTD3
0.300
5.5A
R624
10k/X
1 %
0402
COMMON
PS_IPS1_DRV2
C790
10nF/X
0402
16V
10%
X7R
COMMON
PS_IPS1_DRV1_G
PS_IPS1_DRV1
R634
150ohm/X
0402
1 %
COMMON
C238
1uF/X
16V
10%
X7R
0603
COMMON
C772
10nF/X
16V
10%
X7R
0402
COMMON
R627
10k/X
1 %
0402
COMMON
0.101
PS_IPS1_P2P
C844
0.1uF/X
16V
10%
X7R
0402
COMMON
C855
2.2uF/X
6.3V
10%
X7R
0603
COMMON
PS_IPS1_P2N
R638
0ohm/X
0402
0.05 ohm
COMMON
PS_IPS1_VIN1_2
PS_IPS1_P1P
C857
0.1uF/X
16V
10%
X7R
0402
COMMON
PS_IPS1_P1N
C841
10uF/X
16V
10%
X6S
0805
COMMON
PS_IPS1_CPP
C769
0.1uF/X
16V
10%
X7R
0402
COMMON
PS_IPS1_CPN
PS_IPS1_P2P
R650
10k/X
1 %
0402
COMMON
R652
10k/X
1 %
0402
COMMON
PS_IPS1_P1P
PS_IPS1_P1N
R651
10k/X
1 %
0402
COMMON
R653
10k/X
1 %
0402
COMMON
GND

ASSEMBLY
PAGE DETAIL

<ASSEMBLY_DESCRIPTION>
INPUT SWITCH RTD3

ALL NVIDIA DESIGN SPECIFICATIONS, REFERENCE SPECIFICATIONS, REFERENCE BOARDS, FILES, DRAWINGS, DIAGNOSTICS, LISTS AND OTHER DOCUMENTS OR INFORMATION (TOGETHER AND SEPARATELY, 'MATERIALS') ARE BEING PROVIDED 'AS IS'. THE MATERIALS MAY CONTAIN KNOWN AND UNKNOWN VIOLATIONS OR DEVIATIONS OF INDUSTRY STANDARDS AND SPECIFICATIONS. NVIDIA MAKES NO WARRANTIES, EXPRESSED, IMPLIED, STATUTORY OR OTHERWISE WITH RESPECT TO THE MATERIALS OR OTHERWISE, AND EXPRESSLY DISCLAIMS ALL IMPLIED WARRANTIES INCLUDING, WITHOUT LIMITATION, THE WARRANTIES OF DESIGN, OF NONINFRINGEMENT, MERCHANTABILITY OR FITNESS FOR A PARTICULAR PURPOSE, OR ARISING FROM A COURSE OF DEALING, TRADE USAGE, TRADE PRACTICE, OR INDUSTRY STANDARDS.

GIGABYTE

Title
PCIE

Size: Custom
Document Number: GV-N3060VISION OC-12GD
Rev: 1.01
Date: Thursday, January 14, 2021
Sheet 41 of 54

Page42: PEX_INPUT, 12V_EXT_INPUT, FILTERING

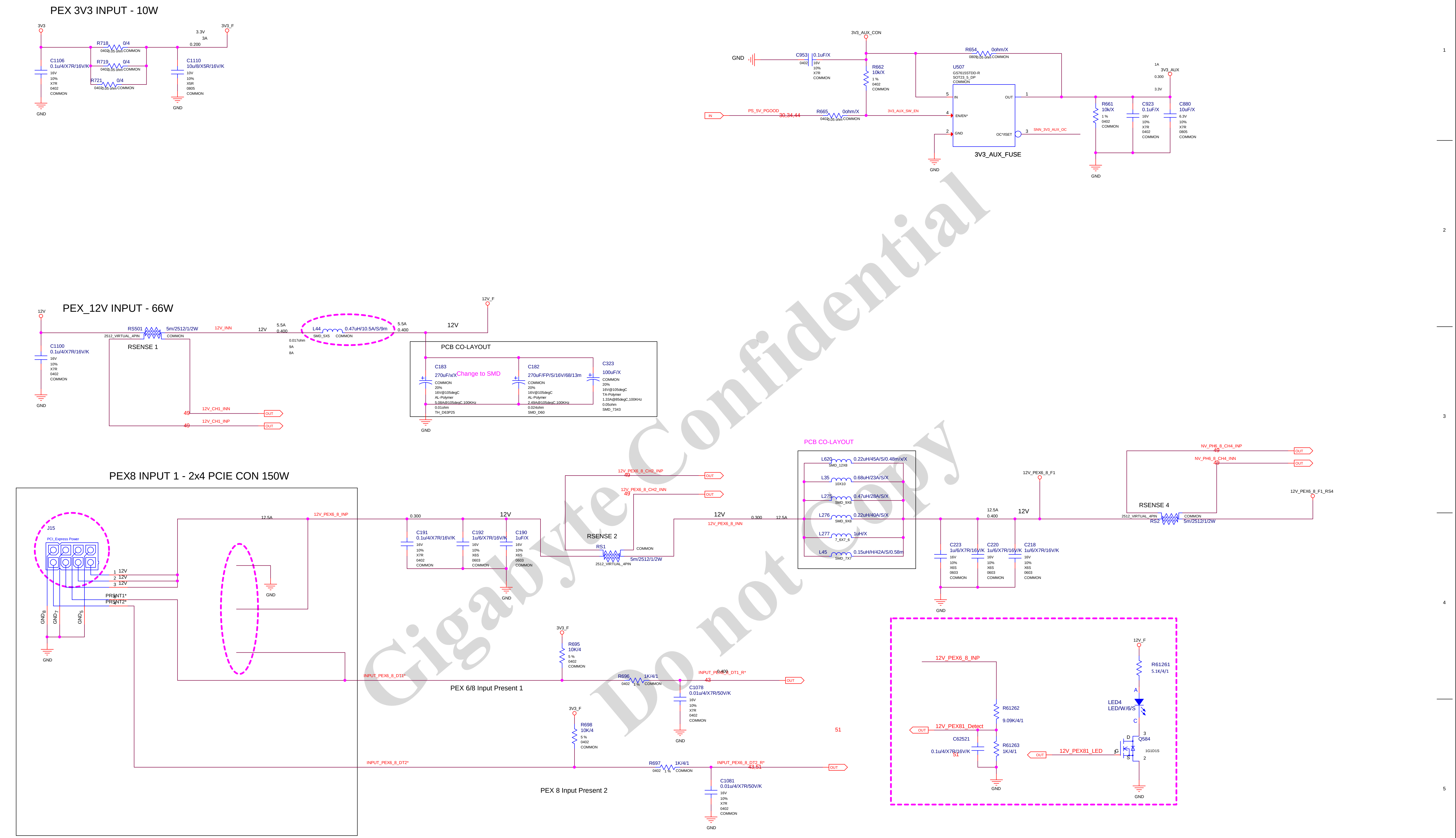
PEX 3V3 INPUT - 10W
3V3
R718 0/4 0402 0.05 ohm COMMON
R719 0/4 0402 0.05 ohm COMMON
R721 0/4 0402 0.05 ohm COMMON
C1106 0.1u/4/X7R/16V/K 16V 10% X7R 0402 COMMON
3.3V 3A 0.200
3V3_F
C1110 10u/8/X5R/16V/K 10V 10% X5R 0805 COMMON
GND
3V3_AUX_CON
GND
C953 0.1uF/X 0402 16V 10% X7R COMMON
R662 10k/X 1 % 0402 COMMON
R654 0ohm/X 0805 0.05 ohm COMMON
U507 GS7615STDD-R SOT23_5_DP COMMON
IN OUT EN/EN* GND OC*/ISET
PS_5V_PGOOD 30,34,44
R665 0ohm/X 0402 0.05 ohm COMMON
3V3_AUX_SW_EN
SNN_3V3_AUX_OC
3V3_AUX_FUSE
1A 3V3_AUX 0.300 3.3V
R661 10k/X 1 % 0402 COMMON
C923 0.1uF/X 16V 10% X7R 0402 COMMON
C880 10uF/X 6.3V 10% X7R 0805 COMMON
PEX_12V INPUT - 66W
12V
RS501 5m/2512/1/2W 2512_VIRTUAL_4PIN COMMON
RSENSE 1
12V_CH1_INN 12V_CH1_INP 49
C1100 0.1u/4/X7R/16V/K 16V 10% X7R 0402 COMMON
12V 5.5A 0.400 0.017ohm 9A 8A
L44 0.47uH/10.5A/S/9m SMD_5X5 COMMON
5.5A 0.400
12V_F
12V
PCB CO-LAYOUT
C183 270uF/x/X Change to SMD COMMON 20% 16V@105degC AL-Polymer 5.08A@105degC,100KHz 0.01ohm TH_D63P25
C182 270uF/FP/S/16V/68/13m COMMON 20% 16V@105degC AL-Polymer 2.49A@105degC,100KHz 0.024ohm SMD_D60
C323 100uF/X COMMON 20% 16V@105degC TA-Polymer 1.33A@85degC,100KHz 0.05ohm SMD_7343
PEX8 INPUT 1 - 2x4 PCIE CON 150W
J15 PCI_Express Power
12V 12V 12V PRSNT1* PRSNT2*
GND8 GND7 GND5
12.5A 12V_PEX6_8_INP
0.300 12V
C191 0.1u/4/X7R/16V/K 16V 10% X7R 0402 COMMON
C192 1u/6/X7R/16V/K 16V 10% X6S 0603 COMMON
C190 1uF/X 16V 10% X6S 0603 COMMON
12V_PEX6_8_CH2_INP 49
12V_PEX6_8_CH2_INN 49
RSENSE 2
RS1 5m/2512/1/2W 2512_VIRTUAL_4PIN COMMON
12V 12V_PEX6_8_INN 0.300 12.5A
PCB CO-LAYOUT
L620 0.22uH/45A/S/0.48m/x/X SMD_12X8
L35 0.68uH/23A/S/X 10X10
L275 0.47uH/28A/S/X SMD_9X8
L276 0.22uH/40A/S/X SMD_9X8
L277 1uH/X 7_6X7_6
L45 0.15uH/H/42A/S/0.58m SMD_7X7
12V_PEX6_8_F1
12.5A 0.400 12V
C223 1u/6/X7R/16V/K 16V 10% X6S 0603 COMMON
C220 1u/6/X7R/16V/K 16V 10% X6S 0603 COMMON
C218 1u/6/X7R/16V/K 16V 10% X6S 0603 COMMON
NV_PH6_8_CH4_INP 49
NV_PH6_8_CH4_INN 49
RSENSE 4
RS2 5m/2512/1/2W 2512_VIRTUAL_4PIN COMMON
12V_PEX6_8_F1_RS4
3V3_F
R695 10K/4 5 % 0402 COMMON
INPUT_PEX6_8_DT1*
R696 1K/4/1 0402 1 % COMMON
INPUT_PEX6_8_DT1_R* 43 0.400
C1078 0.01u/4/X7R/50V/K 16V 10% X7R 0402 COMMON
PEX 6/8 Input Present 1
3V3_F
R698 10K/4 5 % 0402 COMMON
INPUT_PEX6_8_DT2*
R697 1K/4/1 0402 1 % COMMON
INPUT_PEX6_8_DT2_R* 43,51
C1081 0.01u/4/X7R/50V/K 16V 10% X7R 0402 COMMON
PEX 8 Input Present 2
51
12V_PEX6_8_INP
R61262 9.09K/4/1
12V_PEX81_Detect
C62521 0.1u/4/X7R/16V/K 51
R61263 1K/4/1
12V_F
R61261 5.1K/4/1
LED4 LED/W/6/S A C
Q584 1G1D1S D G S
12V_PEX81_LED
OUT IN GND
Gigabyte Confidential Do not Copy

ASSEMBLY
PAGE DETAIL

<ASSEMBLY_DESCRIPTION>
INPUT POWER, FILTERING

ALL NVIDIA DESIGN SPECIFICATIONS, REFERENCE SPECIFICATIONS, REFERENCE BOARDS, FILES, DRAWINGS, DIAGNOSTICS, LISTS AND OTHER DOCUMENTS OR INFORMATION (TOGETHER AND SEPARATELY, 'MATERIALS') ARE BEING PROVIDED 'AS IS'. THE MATERIALS MAY CONTAIN KNOWN AND UNKNOWN VIOLATIONS OR DEVIATIONS OF INDUSTRY STANDARDS AND SPECIFICATIONS. NVIDIA MAKES NO WARRANTIES, EXPRESSED, IMPLIED, STATUTORY OR OTHERWISE WITH RESPECT TO THE MATERIALS OR OTHERWISE, AND EXPRESSLY DISCLAIMS ALL IMPLIED WARRANTIES INCLUDING, WITHOUT LIMITATION, THE WARRANTIES OF DESIGN, OF NONINFRINGEMENT, MERCHANTABILITY OR FITNESS FOR A PARTICULAR PURPOSE, OR ARISING FROM A COURSE OF DEALING, TRADE USAGE, TRADE PRACTICE, OR INDUSTRY STANDARDS.

GIGABYTE		
Title: PCIE		
Size: Custom	Document Number: GV-N3060VISION OC-12GD	Rev: 1.01
Date: Thursday, January 14, 2021	Sheet 42 of 54	

Page43: MISC: HOT UNPLUG

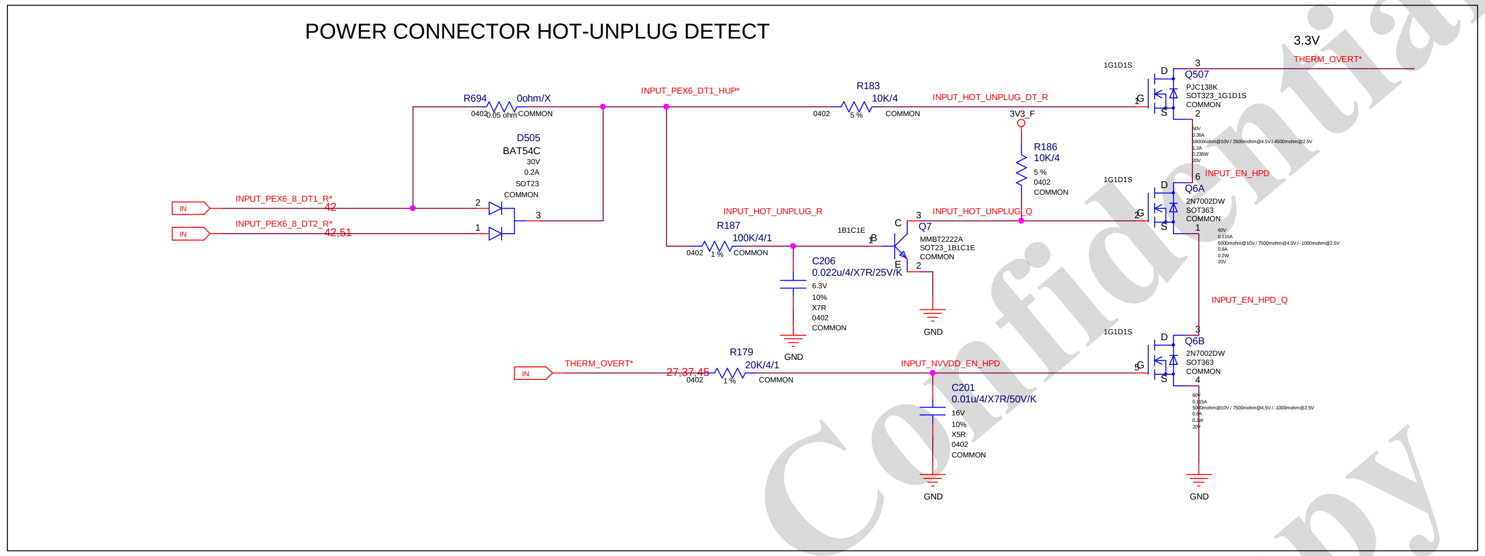
POWER CONNECTOR HOT-UNPLUG DETECT
IN
INPUT_PEX6_8_DT1_R*
42
IN
INPUT_PEX6_8_DT2_R*
42,51
R694
0ohm/X
0402
0.05 ohm
COMMON
D505
BAT54C
30V
0.2A
SOT23
COMMON
2
1
3
INPUT_PEX6_DT1_HUP*
R183
10K/4
0402
5 %
COMMON
INPUT_HOT_UNPLUG_DT_R
3V3_F
R186
10K/4
5 %
0402
COMMON
INPUT_HOT_UNPLUG_R
R187
100K/4/1
0402
1 %
COMMON
1B1C1E
B
C
E
Q7
MMBT2222A
SOT23_1B1C1E
COMMON
INPUT_HOT_UNPLUG_Q
C206
0.022u/4/X7R/25V/K
6.3V
10%
X7R
0402
COMMON
GND
GND
IN
THERM_OVERT*
27,37,45
R179
20K/4/1
0402
1 %
COMMON
INPUT_NVVDD_EN_HPD
C201
0.01u/4/X7R/50V/K
16V
10%
X5R
0402
COMMON
GND
3.3V
THERM_OVERT*
1G1D1S
D
G
S
Q507
PJC138K
SOT323_1G1D1S
COMMON
50V
0.36A
1600mohm@10V / 2500mohm@4.5V / 4500mohm@2.5V
1.2A
0.236W
20V
INPUT_EN_HPD
1G1D1S
Q6A
2N7002DW
SOT363
COMMON
60V
0.115A
5000mohm@10V / 7500mohm@4.5V / -1000mohm@2.5V
0.8A
0.2W
20V
INPUT_EN_HPD_Q
1G1D1S
Q6B
2N7002DW
SOT363
COMMON
60V
0.115A
5000mohm@10V / 7500mohm@4.5V / -1000mohm@2.5V
0.8A
0.2W
20V
GND

ASSEMBLY <ASSEMBLY_DESCRIPTION>
PAGE DETAIL MISC: Hot Unplug

ALL NVIDIA DESIGN SPECIFICATIONS, REFERENCE SPECIFICATIONS, REFERENCE BOARDS, FILES, DRAWINGS, DIAGNOSTICS, LIST AND OTHER DOCUMENTS OR INFORMATION (TOGETHER AND SEPARATELY, 'MATERIALS') ARE BEING PROVIDED 'AS IS'. THE MATERIALS MAY CONTAIN KNOWN AND UNKNOWN VIOLATIONS OR DEVIATIONS OF INDUSTRY STANDARDS AND SPECIFICATIONS. NVIDIA MAKES NO WARRANTIES, EXPRESSED, IMPLIED, STATUTORY OR OTHERWISE WITH RESPECT TO THE MATERIALS OR OTHERWISE, AND EXPRESSLY DISCLAIMS ALL IMPLIED WARRANTIES INCLUDING, WITHOUT LIMITATION, THE WARRANTIES OF DESIGN, OF NONINFRINGEMENT, MERCHANTABILITY OR FITNESS FOR A PARTICULAR PURPOSE, OR ARISING FROM A COURSE OF DEALING, TRADE USAGE, TRADE PRACTICE, OR INDUSTRY STANDARDS.

GIGABYTE

Title: PCIE

Size: Custom
Document Number: GV-N3060VISION OC-12GD
Rev: 1.01

Date: Thursday, January 14, 2021
Sheet 43 of 54

Page44: SEQ: 3V3_SEQ, DDC_5V, DP_AUX_PROT

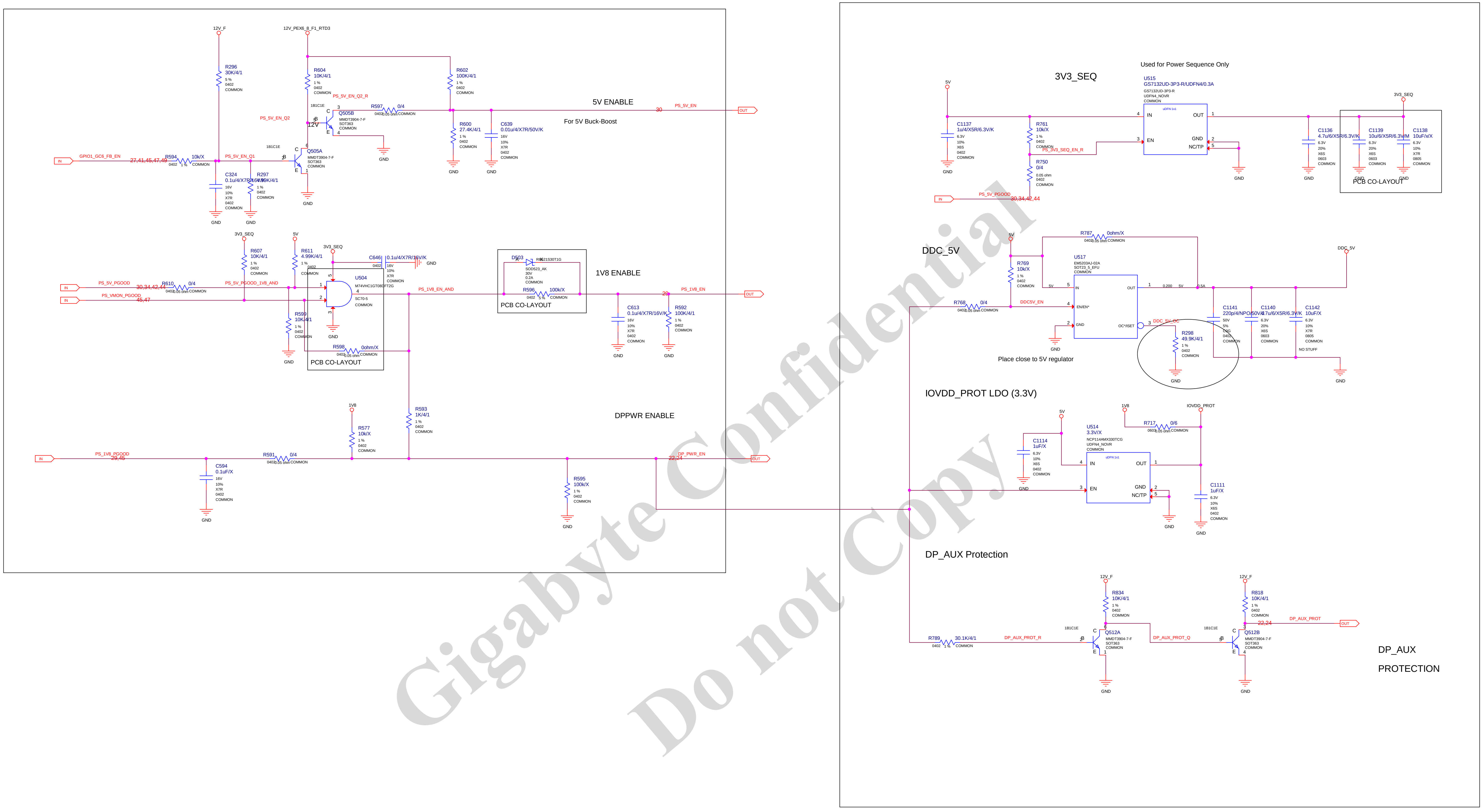
12V_F
12V_PEX6_8_F1_RTD3
R296 30K/4/1
R604 10K/4/1
R602 100K/4/1
PS_5V_EN_Q2_R
PS_5V_EN_Q2
Q505B MMDT3904-7-F SOT363
R597 0/4
5V ENABLE
PS_5V_EN
OUT
For 5V Buck-Boost
R600 27.4K/4/1
C639 0.01u/4/X7R/50V/K
GPIO1_GC6_FB_EN
27,41,45,47,48
R594 10k/X
PS_5V_EN_Q1
Q505A MMDT3904-7-F SOT363
C324 0.1u/4/X7R/16V/K
R297 49.9K/4/1
GND
3V3_SEQ
5V
R607 10K/4/1
R611 4.99K/4/1
C646 0.1u/4/X7R/16V/K
PS_5V_PGOOD
30,34,42,44
R610 0/4
PS_5V_PGOOD_1V8_AND
PS_VMON_PGOOD
45,47
U504 M74VHC1GT08DFT2G SC70-5
PS_1V8_EN_AND
R599 10K/4/1
R598 0ohm/X
PCB CO-LAYOUT
D503 RB521S30T1G SOD523_AK 30V 0.2A
R596 100k/X
1V8 ENABLE
PS_1V8_EN
C613 0.1u/4/X7R/16V/K
R592 100K/4/1
1V8
R593 1K/4/1
R577 10k/X
DPPWR ENABLE
PS_1V8_PGOOD
29,45
R591 0/4
C594 0.1uF/X
R595 100k/X
DP_PWR_EN
22,24
3V3_SEQ
Used for Power Sequence Only
U515 GS7132UD-3P3-R/UDFN4/0.3A
C1137 1u/4/X5R/6.3V/K
R761 10k/X
PS_3V3_SEQ_EN_R
R750 0/4
PS_5V_PGOOD
30,34,42,44
C1136 4.7u/6/X5R/6.3V/K
C1139 10u/6/X5R/6.3V/M
C1138 10uF/x/X
DDC_5V
R787 0ohm/X
R769 10k/X
U517 EMS203AJ-02A SOT23_5_EFU
R768 0/4
DDC5V_EN
DDC_5V_OC
R298 49.9K/4/1
C1141 220p/4/NPO/50V/J
C1140 4.7u/6/X5R/6.3V/K
C1142 10uF/X
NO STUFF
Place close to 5V regulator
IOVDD_PROT LDO (3.3V)
IOVDD_PROT
R717 0/6
U514 3.3V/X NCP114AMX330TCG UDFN4_NOVR
C1114 1uF/X
C1111 1uF/X
DP_AUX Protection
R834 10K/4/1
R818 10K/4/1
R789 30.1K/4/1
DP_AUX_PROT_R
Q512A MMDT3904-7-F SOT363
DP_AUX_PROT_Q
Q512B MMDT3904-7-F SOT363
DP_AUX_PROT
22,24
DP_AUX
PROTECTION

ASSEMBLY
PAGE DETAIL

<ASSEMBLY_DESCRIPTION>
SEQ: 3V3_SEQ,DDC_5V,DP_AUX_PROT

ALL NVIDIA DESIGN SPECIFICATIONS, REFERENCE SPECIFICATIONS, REFERENCE BOARDS, FILES, DRAWINGS, DIAGNOSTICS, LISTS AND OTHER DOCUMENTS OR INFORMATION (TOGETHER AND SEPARATELY, 'MATERIALS') ARE BEING PROVIDED 'AS IS'. THE MATERIALS MAY CONTAIN KNOWN AND UNKNOWN VIOLATIONS OR DEVIATIONS OF INDUSTRY STANDARDS AND SPECIFICATIONS. NVIDIA MAKES NO WARRANTIES, EXPRESSED, IMPLIED, STATUTORY OR OTHERWISE WITH RESPECT TO THE MATERIALS OR OTHERWISE, AND EXPRESSLY DISCLAIMS ALL IMPLIED WARRANTIES INCLUDING, WITHOUT LIMITATION, THE WARRANTIES OF DESIGN, OF NONINFRINGEMENT, MERCHANTABILITY OR FITNESS FOR A PARTICULAR PURPOSE, OR ARISING FROM A COURSE OF DEALING, TRADE USAGE, TRADE PRACTICE, OR INDUSTRY STANDARDS.

GIGABYTE

Title
PCIE

Size: Custom
Document Number: GV-N3060VISION OC-12GD
Rev: 1.01

Date: Thursday, January 14, 2021
Sheet 44 of 54

Page45: SEQ:NVVDD, PEX, FBVDDQ ENABLE

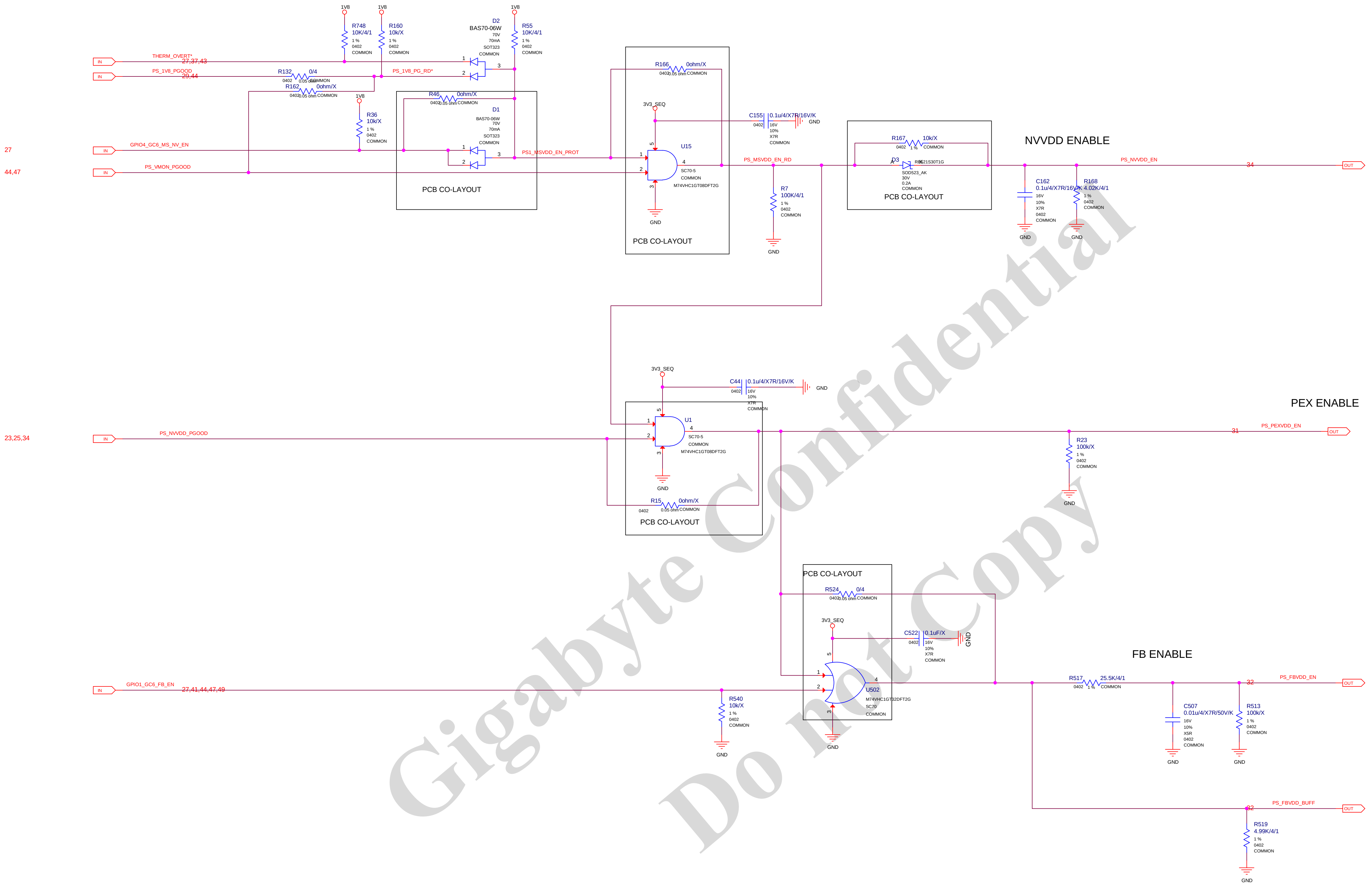
THERM_OVERT*
27,37,43
PS_1V8_PGOOD
29,44
GPIO4_GC6_MS_NV_EN
27
PS_VMON_PGOOD
44,47
1V8
R748 10K/4/1
R160 10k/X
R55 10K/4/1
D2 BAS70-06W
R132 0/4
R162 0ohm/X
PS_1V8_PG_RD*
R36 10k/X
R46 0ohm/X
D1 BAS70-06W
PS1_MSVDD_EN_PROT
PCB CO-LAYOUT
R166 0ohm/X
3V3_SEQ
C155 0.1u/4/X7R/16V/K
U15
SC70-5
M74VHC1GT08DFT2G
PS_MSVDD_EN_RD
R7 100K/4/1
GND
R167 10k/X
D3 RB521S30T1G
SOD523_AK
NVVDD ENABLE
PS_NVVDD_EN
34
C162 0.1u/4/X7R/16V/K
R168 4.02K/4/1
OUT
PS_NVVDD_PGOOD
23,25,34
C44 0.1u/4/X7R/16V/K
U1
M74VHC1GT08DFT2G
R15 0ohm/X
PEX ENABLE
PS_PEXVDD_EN
31
R23 100k/X
R524 0/4
C522 0.1uF/X
U502
M74VHC1GT32DFT2G
GPIO1_GC6_FB_EN
27,41,44,47,49
R540 10k/X
FB ENABLE
R517 25.5K/4/1
PS_FBVDD_EN
32
C507 0.01u/4/X7R/50V/K
R513 100k/X
PS_FBVDD_BUFF
R519 4.99K/4/1
COMMON

ASSEMBLY
PAGE DETAIL

<ASSEMBLY_DESCRIPTION>
SEQ: NVVDD, PEXVDD AND FBVDDQ ENABLE

ALL NVIDIA DESIGN SPECIFICATIONS, REFERENCE SPECIFICATIONS, REFERENCE BOARDS, FILES, DRAWINGS, DIAGNOSTICS, LISTS AND OTHER DOCUMENTS OR INFORMATION (TOGETHER AND SEPARATELY, 'MATERIALS') ARE BEING PROVIDED 'AS IS'. THE MATERIALS MAY CONTAIN KNOWN AND UNKNOWN VIOLATIONS OR DEVIATIONS OF INDUSTRY STANDARDS AND SPECIFICATIONS. NVIDIA MAKES NO WARRANTIES, EXPRESSED, IMPLIED, STATUTORY OR OTHERWISE WITH RESPECT TO THE MATERIALS OR OTHERWISE, AND EXPRESSLY DISCLAIMS ALL IMPLIED WARRANTIES INCLUDING, WITHOUT LIMITATION, THE WARRANTIES OF DESIGN, OF NONINFRINGEMENT, MERCHANTABILITY OR FITNESS FOR A PARTICULAR PURPOSE, OR ARISING FROM A COURSE OF DEALING, TRADE USAGE, TRADE PRACTICE, OR INDUSTRY STANDARDS.

GIGABYTE

Title
PCIE

Size Custom
Document Number GV-N3060VISION OC-12GD
Rev 1.01

Date: Thursday, January 14, 2021
Sheet 45 of 54

Page46: SEQ:MISC

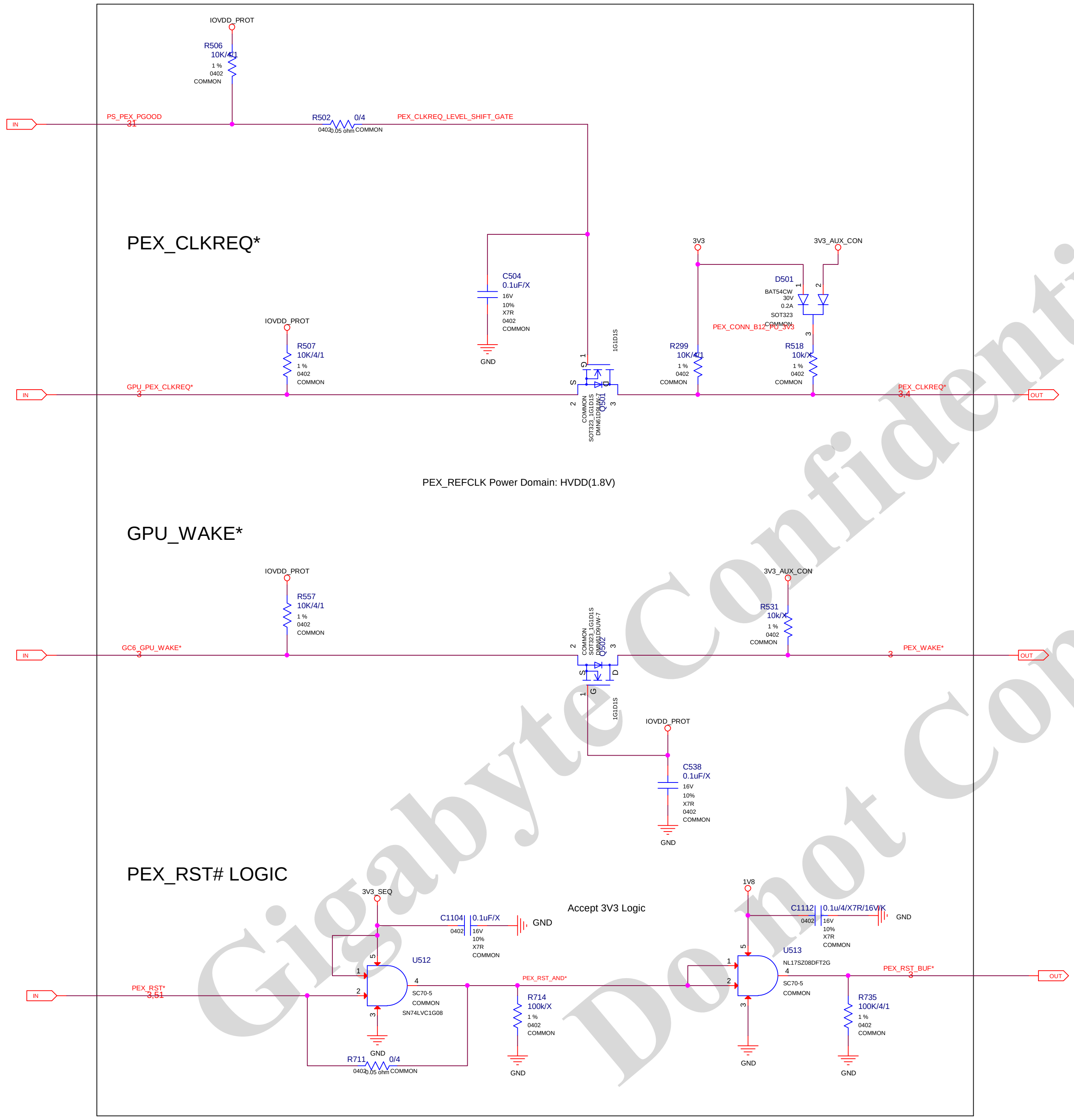
PEX_CLKREQ*
IOVDD_PROT
R506
10K/4/1
1 %
0402
COMMON
IN
PS_PEX_PGOOD
31
R502
0/4
0402
0.05 ohm
COMMON
PEX_CLKREQ_LEVEL_SHIFT_GATE
C504
0.1uF/X
16V
10%
X7R
0402
COMMON
GND
IOVDD_PROT
R507
10K/4/1
1 %
0402
COMMON
IN
GPU_PEX_CLKREQ*
3
G 1
S 2
D 3
1G1D1S
Q501
COMMON
SOT323_1G1D1S
DMN61D9UW-7
3V3
3V3_AUX_CON
D501
BAT54CW
30V
0.2A
SOT323
COMMON
PEX_CONN_B12_PU_3V3
R299
10K/4/1
1 %
0402
COMMON
R518
10k/X
1 %
0402
COMMON
PEX_CLKREQ*
3,4
OUT
PEX_REFCLK Power Domain: HVDD(1.8V)
GPU_WAKE*
IOVDD_PROT
R557
10K/4/1
1 %
0402
COMMON
IN
GC6_GPU_WAKE*
3
Q502
COMMON
SOT323_1G1D1S
DMN61D9UW-7
1G1D1S
IOVDD_PROT
C538
0.1uF/X
16V
10%
X7R
0402
COMMON
GND
3V3_AUX_CON
R531
10k/X
1 %
0402
COMMON
PEX_WAKE*
3
OUT
PEX_RST# LOGIC
3V3_SEQ
C1104
0.1uF/X
0402
16V
10%
X7R
COMMON
GND
Accept 3V3 Logic
U512
SC70-5
COMMON
SN74LVC1G08
IN
PEX_RST*
3,51
GND
R711
0/4
0402
0.05 ohm
COMMON
PEX_RST_AND*
R714
100k/X
1 %
0402
COMMON
GND
1V8
C1112
0.1u/4/X7R/16V/K
0402
16V
10%
X7R
COMMON
GND
U513
NL17SZ08DFT2G
SC70-5
COMMON
GND
PEX_RST_BUF*
3
OUT
R735
100K/4/1
1 %
0402
COMMON
GND

ASSEMBLY <ASSEMBLY_DESCRIPTION>
PAGE DETAIL SEQ: MISC

ALL NVIDIA DESIGN SPECIFICATIONS, REFERENCE SPECIFICATIONS, REFERENCE BOARDS, FILES, DRAWINGS, DIAGNOSTICS, LISTS AND OTHER DOCUMENTS OR INFORMATION (TOGETHER AND SEPARATELY, 'MATERIALS') ARE BEING PROVIDED 'AS IS'. THE MATERIALS MAY CONTAIN KNOWN AND UNKNOWN VIOLATIONS OR DEVIATIONS OF INDUSTRY STANDARDS AND SPECIFICATIONS. NVIDIA MAKES NO WARRANTIES, EXPRESSED, IMPLIED, STATUTORY OR OTHERWISE WITH RESPECT TO THE MATERIALS OR OTHERWISE, AND EXPRESSLY DISCLAIMS ALL IMPLIED WARRANTIES INCLUDING, WITHOUT LIMITATION, THE WARRANTIES OF DESIGN, OF NONINFRINGEMENT, MERCHANTABILITY OR FITNESS FOR A PARTICULAR PURPOSE, OR ARISING FROM A COURSE OF DEALING, TRADE USAGE, TRADE PRACTICE, OR INDUSTRY STANDARDS.

GIGABYTE

Title
PCIE

Size: Custom
Document Number: GV-N3060VISION OC-12GD
Rev: 1.01
Date: Thursday, January 14, 2021
Sheet 46 of 54

Page47: SEQUENCE:Voltage Monitor

3V3PEX Voltage Monitor

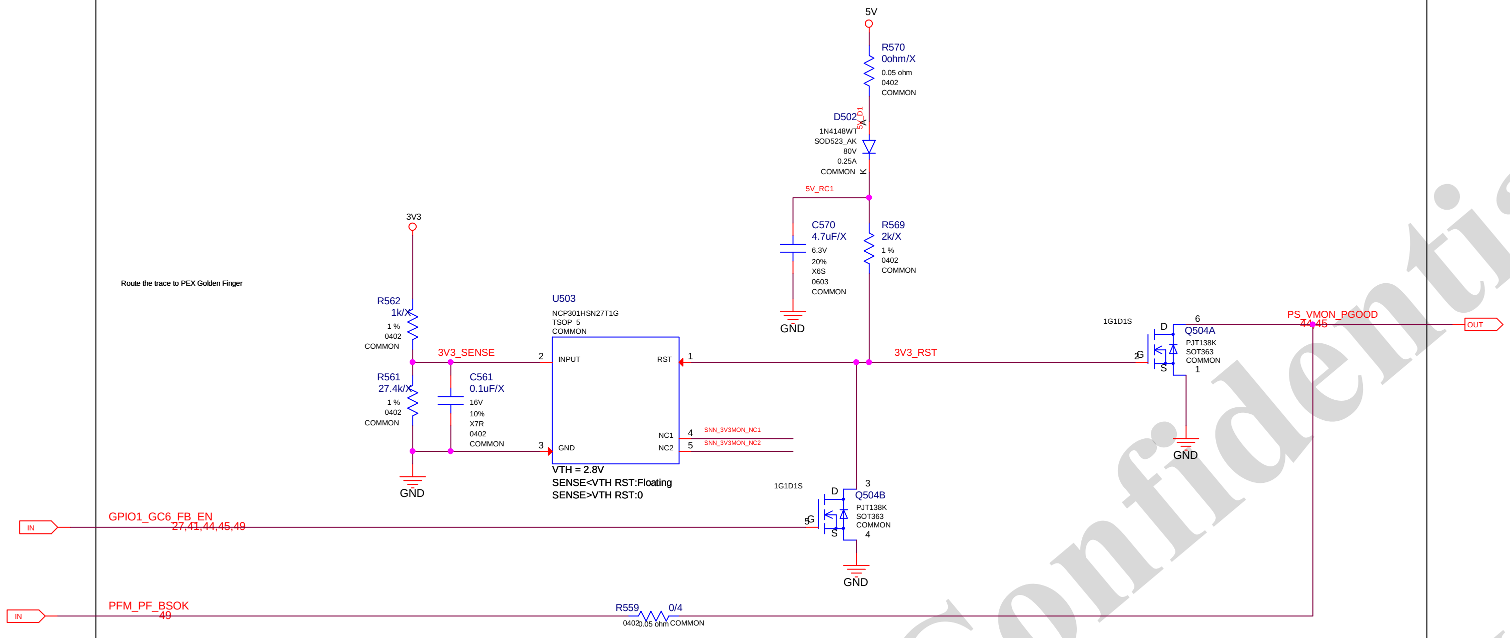
5V
R570
0ohm/X
0.05 ohm
0402
COMMON
D502
5V_D1
A
1N4148WT
SOD523_AK
80V
0.25A
COMMON
K
5V_RC1
C570
4.7uF/X
6.3V
20%
X6S
0603
COMMON
GND
R569
2k/X
1 %
0402
COMMON
3V3
Route the trace to PEX Golden Finger
R562
1k/X
1 %
0402
COMMON
R561
27.4k/X
1 %
0402
COMMON
C561
0.1uF/X
16V
10%
X7R
0402
COMMON
GND
3V3_SENSE
U503
NCP301HSN27T1G
TSOP_5
COMMON
2
INPUT
RST
1
3
GND
NC1
NC2
4
5
SNN_3V3MON_NC1
SNN_3V3MON_NC2
VTH = 2.8V
SENSE<VTH RST:Floating
SENSE>VTH RST:0
3V3_RST
1G1D1S
D
6
Q504A
PJT138K
SOT363
COMMON
2
G
S
1
GND
PS_VMON_PGOOD
44,45
OUT
1G1D1S
D
3
Q504B
PJT138K
SOT363
COMMON
5
G
S
4
GND
IN
GPIO1_GC6_FB_EN
27,41,44,45,49
IN
PFM_PF_BSOK
49
R559
0/4
0402
0.05 ohm
COMMON

Signal	Direction	Function
3V3	INPUT	Sense the 3V3 Voltage from PCIE golden finger
12V	INPUT	Sense the 12V Voltage from PCIE golden finger
PS_VMON_PGOOD	OPEN-DRAIN	Floating(H) once both 3V3 and 12V reach Vth
GC6_FB_EN	INPUT	Indicator for RTD3/GC6 residence,Use to Mask the VMON_PGOOD
PS_PF_BSOK	INPUT	From Pre-filter(BS_OK)

ASSEMBLY <ASSEMBLY_DESCRIPTION>
PAGE DETAIL SEQUENCE: VOLTAGE MONITOR

ALL NVIDIA DESIGN SPECIFICATIONS, REFERENCE SPECIFICATIONS, REFERENCE BOARDS, FILES, DRAWINGS, DIAGNOSTICS, LISTS AND OTHER DOCUMENTS OR INFORMATION (TOGETHER AND SEPARATELY, 'MATERIALS') ARE BEING PROVIDED 'AS IS'. THE MATERIALS MAY CONTAIN KNOWN AND UNKNOWN VIOLATIONS OR DEVIATIONS OF INDUSTRY STANDARDS AND SPECIFICATIONS. NVIDIA MAKES NO WARRANTIES, EXPRESSED, IMPLIED, STATUTORY OR OTHERWISE WITH RESPECT TO THE MATERIALS OR OTHERWISE, AND EXPRESSLY DISCLAIMS ALL IMPLIED WARRANTIES INCLUDING, WITHOUT LIMITATION, THE WARRANTIES OF DESIGN, OF NONINFRINGEMENT, MERCHANTABILITY OR FITNESS FOR A PARTICULAR PURPOSE, OR ARISING FROM A COURSE OF DEALING, TRADE USAGE, TRADE PRACTICE, OR INDUSTRY STANDARDS.

GIGABYTE
Title
PCIE
Size Custom
Document Number
GV-N3060VISION OC-12GD
Rev
1.01
Date: Thursday, January 14, 2021
Sheet 47 of 54

Page48: FAN & LED

2-PIN LED HEADER

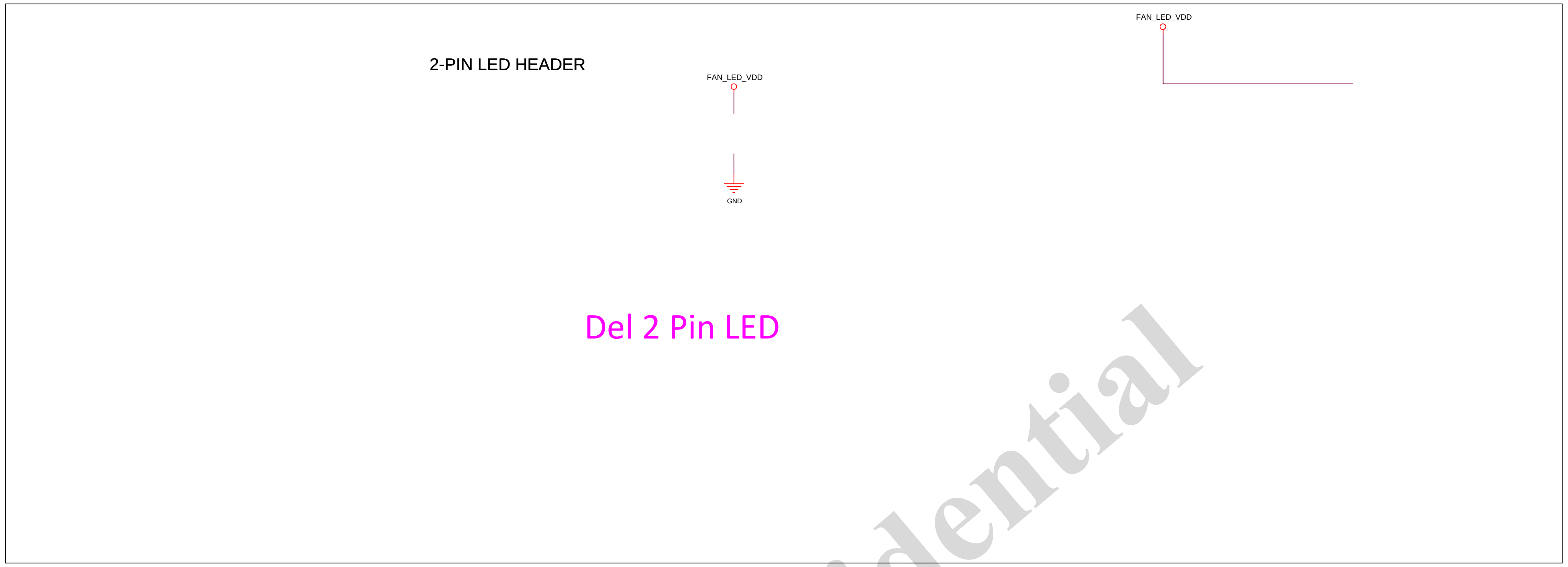
FAN_LED_VDD
FAN_LED_VDD
GND
Del 2 Pin LED

DUAL FAN 4-PIN HEADERS

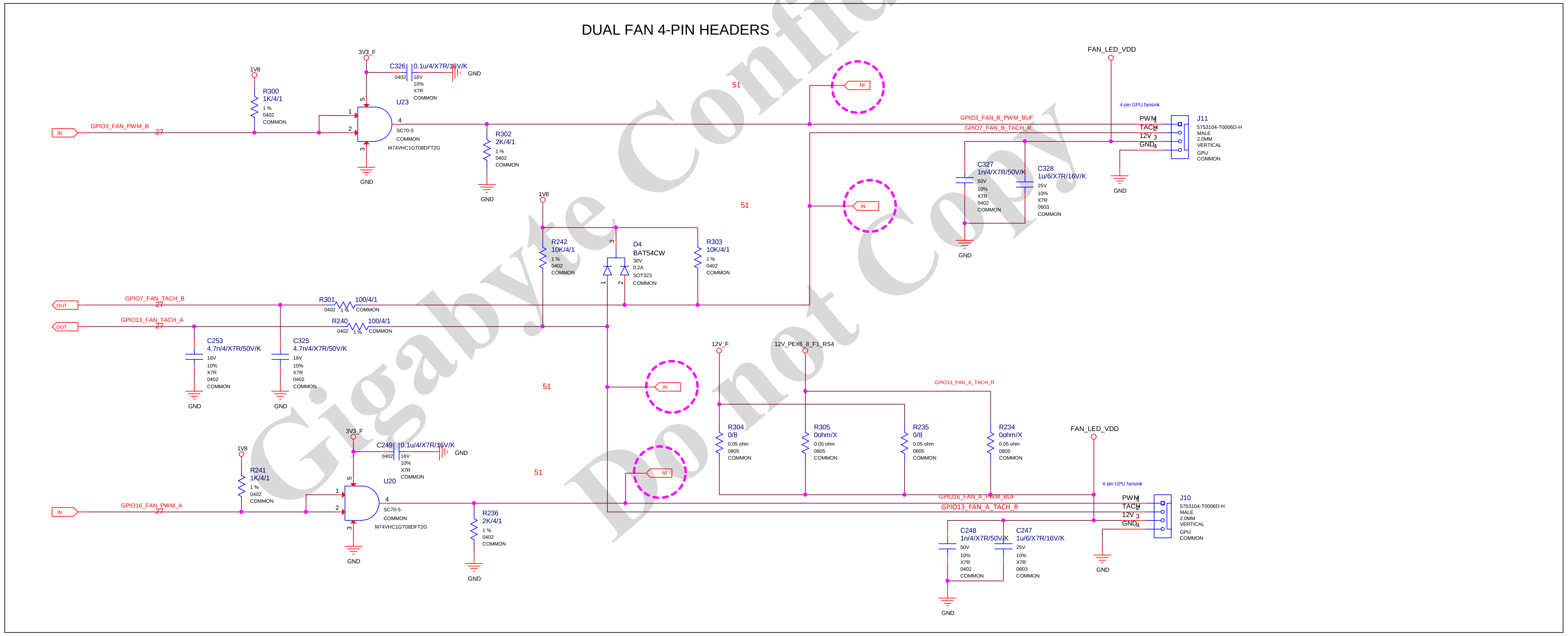
IN
GPIO3_FAN_PWM_B
27
1V8
R300
1K/4/1
1 %
0402
COMMON
3V3_F
C326
0.1u/4/X7R/16V/K
0402
16V
10%
X7R
COMMON
GND
U23
SC70-5
COMMON
M74VHC1GT08DFT2G
GND
R302
2K/4/1
1 %
0402
COMMON
GND
51
NI
51
IN
GPIO3_FAN_B_PWM_BUF
GPIO7_FAN_B_TACH_R
FAN_LED_VDD
4-pin GPU fansink
PWM 1
TACH 2
12V 3
GND 4
J11
5753104-T0006D-H
MALE
2.0MM
VERTICAL
GPU
COMMON
GND
C327
1n/4/X7R/50V/K
50V
10%
X7R
0402
COMMON
C328
1u/6/X7R/16V/K
25V
10%
X7R
0603
COMMON
GND
1V8
R242
10K/4/1
1 %
0402
COMMON
D4
BAT54CW
30V
0.2A
SOT323
COMMON
R303
10K/4/1
1 %
0402
COMMON
OUT
GPIO7_FAN_TACH_B
27
R301
100/4/1
0402
1 %
COMMON
OUT
GPIO13_FAN_TACH_A
27
R240
100/4/1
0402
1 %
COMMON
C253
4.7n/4/X7R/50V/K
16V
10%
X7R
0402
COMMON
GND
C325
4.7n/4/X7R/50V/K
16V
10%
X7R
0402
COMMON
GND
51
IN
12V_F
12V_PEX6_8_F1_RS4
GPIO13_FAN_A_TACH_R
R304
0/8
0.05 ohm
0805
COMMON
R305
0ohm/X
0.05 ohm
0805
COMMON
R235
0/8
0.05 ohm
0805
COMMON
R234
0ohm/X
0.05 ohm
0805
COMMON
FAN_LED_VDD
4-pin GPU fansink
3V3_F
C249
0.1u/4/X7R/16V/K
0402
16V
10%
X7R
COMMON
GND
1V8
R241
1K/4/1
1 %
0402
COMMON
U20
51
NI
IN
GPIO16_FAN_PWM_A
27
SC70-5
COMMON
M74VHC1GT08DFT2G
GND
R236
2K/4/1
1 %
0402
COMMON
GND
GPIO16_FAN_A_PWM_BUF
GPIO13_FAN_A_TACH_R
PWM 1
TACH 2
12V 3
GND 4
J10
5753104-T0006D-H
MALE
2.0MM
VERTICAL
GPU
COMMON
C248
1n/4/X7R/50V/K
50V
10%
X7R
0402
COMMON
C247
1u/6/X7R/16V/K
25V
10%
X7R
0603
COMMON
GND
GND

Gigabyte Confidential Do not Copy

ASSEMBLY
PAGE DETAIL

<ASSEMBLY_DESCRIPTION>
FAN & LED

ALL NVIDIA DESIGN SPECIFICATIONS, REFERENCE SPECIFICATIONS, REFERENCE BOARDS, FILES, DRAWINGS, DIAGNOSTICS, LISTS AND OTHER DOCUMENTS OR INFORMATION (TOGETHER AND SEPARATELY, 'MATERIALS') ARE BEING PROVIDED 'AS IS'. THE MATERIALS MAY CONTAIN KNOWN AND UNKNOWN VIOLATIONS OR DEVIATIONS OF INDUSTRY STANDARDS AND SPECIFICATIONS. NVIDIA MAKES NO WARRANTIES, EXPRESSED, IMPLIED, STATUTORY OR OTHERWISE WITH RESPECT TO THE MATERIALS OR OTHERWISE, AND EXPRESSLY DISCLAIMS ALL IMPLIED WARRANTIES INCLUDING, WITHOUT LIMITATION, THE WARRANTIES OF DESIGN, OF NONINFRINGEMENT, MERCHANTABILITY OR FITNESS FOR A PARTICULAR PURPOSE, OR ARISING FROM A COURSE OF DEALING, TRADE USAGE, TRADE PRACTICE, OR INDUSTRY STANDARDS.

GIGABYTE

Title	PCIE		
Size Custom	Document Number GV-N3060VISION OC-12GD		Rev 1.01
Date:	Thursday, January 14, 2021	Sheet 48 of 54	

Page49: OVRM_PWR SENSE

MODE PIN STATUS	MULTIPLEXER OPERATION
LOW	DEVICE A
TRI-STATE(FLOATING)	STAND-ALONE
HIGH	DEVICE B

ENABLE PIN STATUS	MULTIPLEXER OPERATION
LOW	FULLY FUNCTIONAL
TRI-STATE(FLOATING)	LIMITTED FUNCTION
HIGH	STANDBY

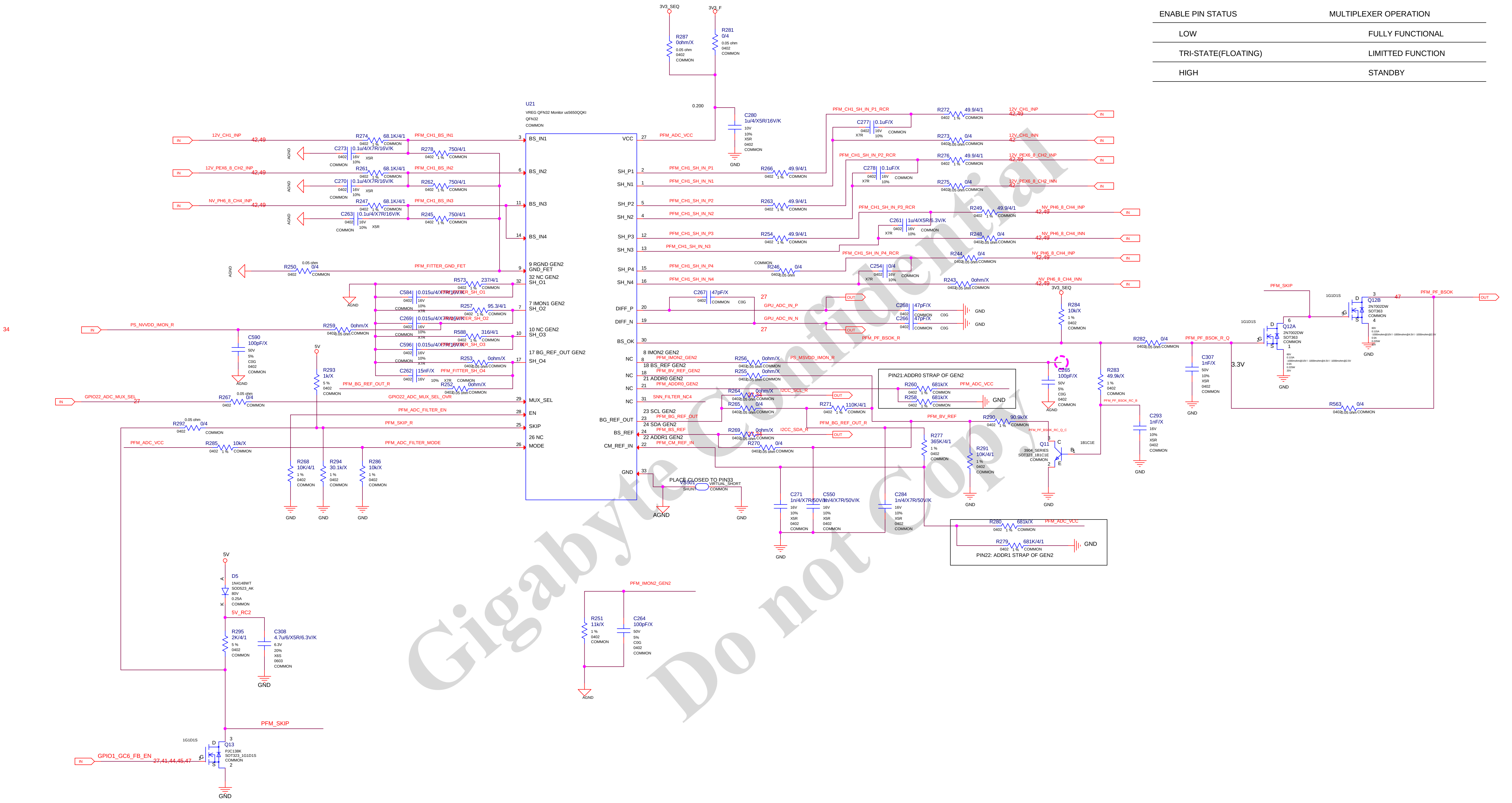
U21
VREG QFN32 Monitor us5650QQKI
QFN32
COMMON
BS_IN1
BS_IN2
BS_IN3
BS_IN4
9 RGND GEN2
GND_FET
32 NC GEN2
SH_O1
7 IMON1 GEN2
SH_O2
10 NC GEN2
SH_O3
17 BG_REF_OUT GEN2
SH_O4
MUX_SEL
EN
SKIP
26 NC
MODE
VCC
SH_P1
SH_N1
SH_P2
SH_N2
SH_P3
SH_N3
SH_P4
SH_N4
DIFF_P
DIFF_N
BS_OK
8 IMON2 GEN2
NC
18 BS_REF GEN2
21 ADDR0 GEN2
23 SCL GEN2
BG_REF_OUT
24 SDA GEN2
BS_REF
22 ADDR1 GEN2
CM_REF_IN
GND
3V3_SEQ
3V3_F
R287 0ohm/X 0.05 ohm 0402 COMMON
R281 0/4 0.05 ohm 0402 COMMON
0.200
C280 1u/4/X5R/16V/K 10V 10% X5R 0402 COMMON
PFM_ADC_VCC
12V_CH1_INP 42,49
R274 68.1K/4/1
PFM_CH1_BS_IN1
C273 0.1u/4/X7R/16V/K
R278 750/4/1
12V_PEX6_8_CH2_INP 42,49
R261 68.1K/4/1
PFM_CH1_BS_IN2
C270 0.1u/4/X7R/16V/K
R262 750/4/1
NV_PH6_8_CH4_INP 42,49
R247 68.1K/4/1
PFM_CH1_BS_IN3
C263 0.1u/4/X7R/16V/K
R245 750/4/1
AGND
R250 0/4 0.05 ohm
PFM_FITTER_GND_FET
R573 237/4/1
C584 0.015u/4/X7R/16V/K
PFM_FITTER_SH_O1
R257 95.3/4/1
C269 0.015u/4/X7R/16V/K
PFM_FITTER_SH_O2
R588 316/4/1
C596 0.015u/4/X7R/16V/K
PFM_FITTER_SH_O3
R253 0ohm/X
C262 15nF/X
PFM_FITTER_SH_O4
R252 0ohm/X
34
PS_NVVDD_IMON_R
R259 0ohm/X
C590 100pF/X 50V 5% C0G 0402 COMMON
5V
R293 1k/X 5 % 0402 COMMON
PFM_BG_REF_OUT_R
GPIO22_ADC_MUX_SEL 27
R267 0/4 0.05 ohm
GPIO22_ADC_MUX_SEL_OVR
PFM_ADC_FILTER_EN
R292 0/4 0.05 ohm
PFM_SKIP_R
R285 10k/X
PFM_ADC_FILTER_MODE
R268 10K/4/1
R294 30.1k/X
R286 10k/X
GND
PFM_CH1_SH_IN_P1
R266 49.9/4/1
PFM_CH1_SH_IN_N1
PFM_CH1_SH_IN_P2
R263 49.9/4/1
PFM_CH1_SH_IN_N2
PFM_CH1_SH_IN_P3
R254 49.9/4/1
PFM_CH1_SH_IN_N3
PFM_CH1_SH_IN_P4
R246 0/4
PFM_CH1_SH_IN_N4
PFM_CH1_SH_IN_P1_RCR
R272 49.9/4/1
12V_CH1_INP 42,49
C277 0.1uF/X
R273 0/4
12V_CH1_INN 42
PFM_CH1_SH_IN_P2_RCR
R276 49.9/4/1
12V_PEX6_8_CH2_INP 42,49
C278 0.1uF/X
R275 0/4
12V_PEX6_8_CH2_INN 42
PFM_CH1_SH_IN_P3_RCR
R249 49.9/4/1
NV_PH6_8_CH4_INP 42,49
C261 1u/4/X5R/6.3V/K
R248 0/4
NV_PH6_8_CH4_INN 42,49
PFM_CH1_SH_IN_P4_RCR
R244 0/4
NV_PH6_8_CH4_INP 42,49
C254 0/4
R243 0ohm/X
NV_PH6_8_CH4_INN 42,49
IN
C267 47pF/X
27
GPU_ADC_IN_P
GPU_ADC_IN_N
OUT
C268 47pF/X
C266 47pF/X
PFM_PF_BSOK_R
R284 10k/X
PFM_IMON2_GEN2
R256 0ohm/X
PS_MSVDD_IMON_R
PFM_BV_REF_GEN2
R255 0ohm/X
PFM_ADDR0_GEN2
SNN_FILTER_NC4
R264 0ohm/X 27,34
I2CC_SCL_R
R265 0/4
R271 110K/4/1
PFM_BG_REF_OUT
PFM_BS_REF
R269 0ohm/X 27,34
I2CC_SDA_R
PFM_CM_REF_IN
R270 0/4
PIN21:ADDR0 STRAP OF GEN2
R260 681k/X
R258 681k/X
C265 100pF/X
PFM_BV_REF
R290 90.9k/X
PFM_BG_REF_OUT_R
R277 365K/4/1
R291 10K/4/1
PFM_PF_BSOK_RC_Q_C
Q11 3904_SERIES SOT323_1B1C1E COMMON
1B1C1E
R283 49.9k/X
PFM_PF_BSOK_RC_B
C293 1nF/X
R282 0/4
PFM_PF_BSOK_R_Q
C307 1nF/X
3.3V
1G1D1S
Q12A 2N7002DW SOT363 COMMON
PFM_SKIP
Q12B 2N7002DW SOT363 COMMON
47
PFM_PF_BSOK
R563 0/4
PLACE CLOSED TO PIN33
VS501 SHUNT VIRTUAL_SHORT COMMON
C271 1n/4/X7R/50V/K
C550 1n/4/X7R/50V/K
C284 1n/4/X7R/50V/K
R280 681k/X
R279 681K/4/1
PIN22: ADDR1 STRAP OF GEN2
PFM_IMON2_GEN2
R251 11k/X
C264 100pF/X
D5 1N4148WT SOD523_AK 80V 0.25A COMMON
5V_RC2
R295 2K/4/1
C308 4.7u/6/X5R/6.3V/K
GPIO1_GC6_FB_EN 27,41,44,45,47
Q13 PJC138K SOT323_1G1D1S COMMON

Gigabyte Confidential Do not Copy

ASSEMBLY	<ASSEMBLY_DESCRIPTION>
PAGE DETAIL	OVRM POWER SENSE

ALL NVIDIA DESIGN SPECIFICATIONS, REFERENCE SPECIFICATIONS, REFERENCE BOARDS, FILES, DRAWINGS, DIAGNOSTICS, LISTS AND OTHER DOCUMENTS OR INFORMATION (TOGETHER AND SEPARATELY, 'MATERIALS') ARE BEING PROVIDED 'AS IS'. THE MATERIALS MAY CONTAIN KNOWN AND UNKNOWN VIOLATIONS OR DEVIATIONS OF INDUSTRY STANDARDS AND SPECIFICATIONS. NVIDIA MAKES NO WARRANTIES, EXPRESSED, IMPLIED, STATUTORY OR OTHERWISE WITH RESPECT TO THE MATERIALS OR OTHERWISE, AND EXPRESSLY DISCLAIMS ALL IMPLIED WARRANTIES INCLUDING, WITHOUT LIMITATION, THE WARRANTIES OF DESIGN, OF NONINFRINGEMENT, MERCHANTABILITY OR FITNESS FOR A PARTICULAR PURPOSE, OR ARISING FROM A COURSE OF DEALING, TRADE USAGE, TRADE PRACTICE, OR INDUSTRY STANDARDS.

GIGABYTE

Title PCIE

Size Custom
Document Number GV-N3060VISION OC-12GD
Rev 1.01

Date: Thursday, January 14, 2021
Sheet 49 of 54

Page50: MECH

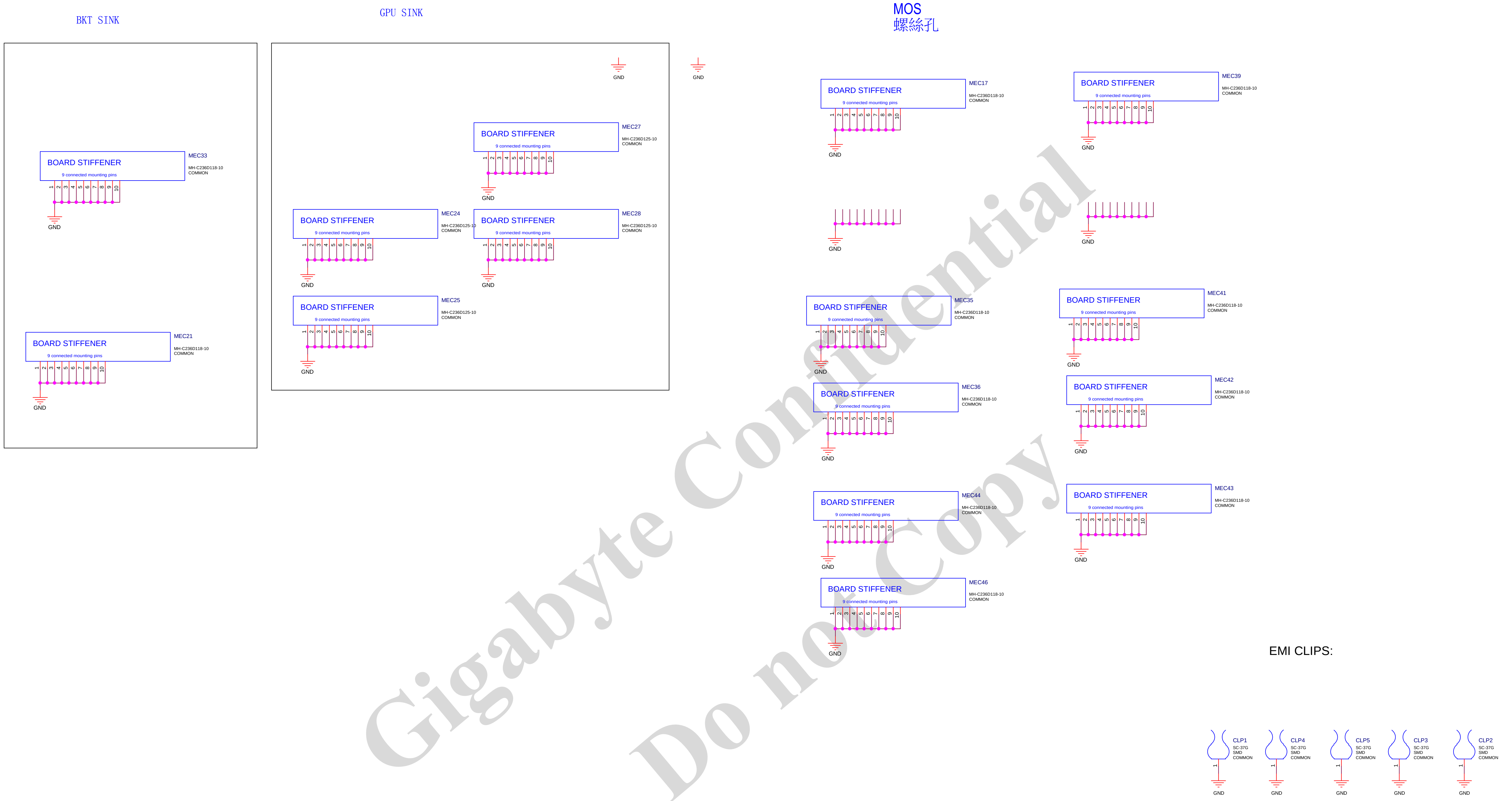
BKT SINK
GPU SINK
MOS
螺絲孔
BOARD STIFFENER
9 connected mounting pins
MEC33 MH-C236D118-10 COMMON
MEC21 MH-C236D118-10 COMMON
MEC27 MH-C236D125-10 COMMON
MEC24 MH-C236D125-10 COMMON
MEC28 MH-C236D125-10 COMMON
MEC25 MH-C236D125-10 COMMON
MEC17 MH-C236D118-10 COMMON
MEC39 MH-C236D118-10 COMMON
MEC35 MH-C236D118-10 COMMON
MEC41 MH-C236D118-10 COMMON
MEC36 MH-C236D118-10 COMMON
MEC42 MH-C236D118-10 COMMON
MEC44 MH-C236D118-10 COMMON
MEC43 MH-C236D118-10 COMMON
MEC46 MH-C236D118-10 COMMON
1 2 3 4 5 6 7 8 9 10
GND
EMI CLIPS:
CLP1 SC-37G SMD COMMON
CLP4 SC-37G SMD COMMON
CLP5 SC-37G SMD COMMON
CLP3 SC-37G SMD COMMON
CLP2 SC-37G SMD COMMON

ASSEMBLY <ASSEMBLY_DESCRIPTION>
PAGE DETAIL MECH

ALL NVIDIA DESIGN SPECIFICATIONS, REFERENCE SPECIFICATIONS, REFERENCE BOARDS, FILES, DRAWINGS, DIAGNOSTICS, LIST AND OTHER DOCUMENTS OR INFORMATION (TOGETHER AND SEPARATELY, 'MATERIALS') ARE BEING PROVIDED 'AS IS'. THE MATERIALS MAY CONTAIN KNOWN AND UNKNOWN VIOLATIONS OR DEVIATIONS OF INDUSTRY STANDARDS AND SPECIFICATIONS. NVIDIA MAKES NO WARRANTIES, EXPRESSED, IMPLIED, STATUTORY OR OTHERWISE WITH RESPECT TO THE MATERIALS OR OTHERWISE, AND EXPRESSLY DISCLAIMS ALL IMPLIED WARRANTIES INCLUDING, WITHOUT LIMITATION, THE WARRANTIES OF DESIGN, OF NONINFRINGEMENT, MERCHANTABILITY OR FITNESS FOR A PARTICULAR PURPOSE, OR ARISING FROM A COURSE OF DEALING, TRADE USAGE, TRADE PRACTICE, OR INDUSTRY STANDARDS.

GIGABYTE
Title PCIE
Size Custom
Document Number GV-N3060VISION OC-12GD
Rev 1.01
Date: Thursday, January 14, 2021
Sheet 50 of 54

Page54: MCU

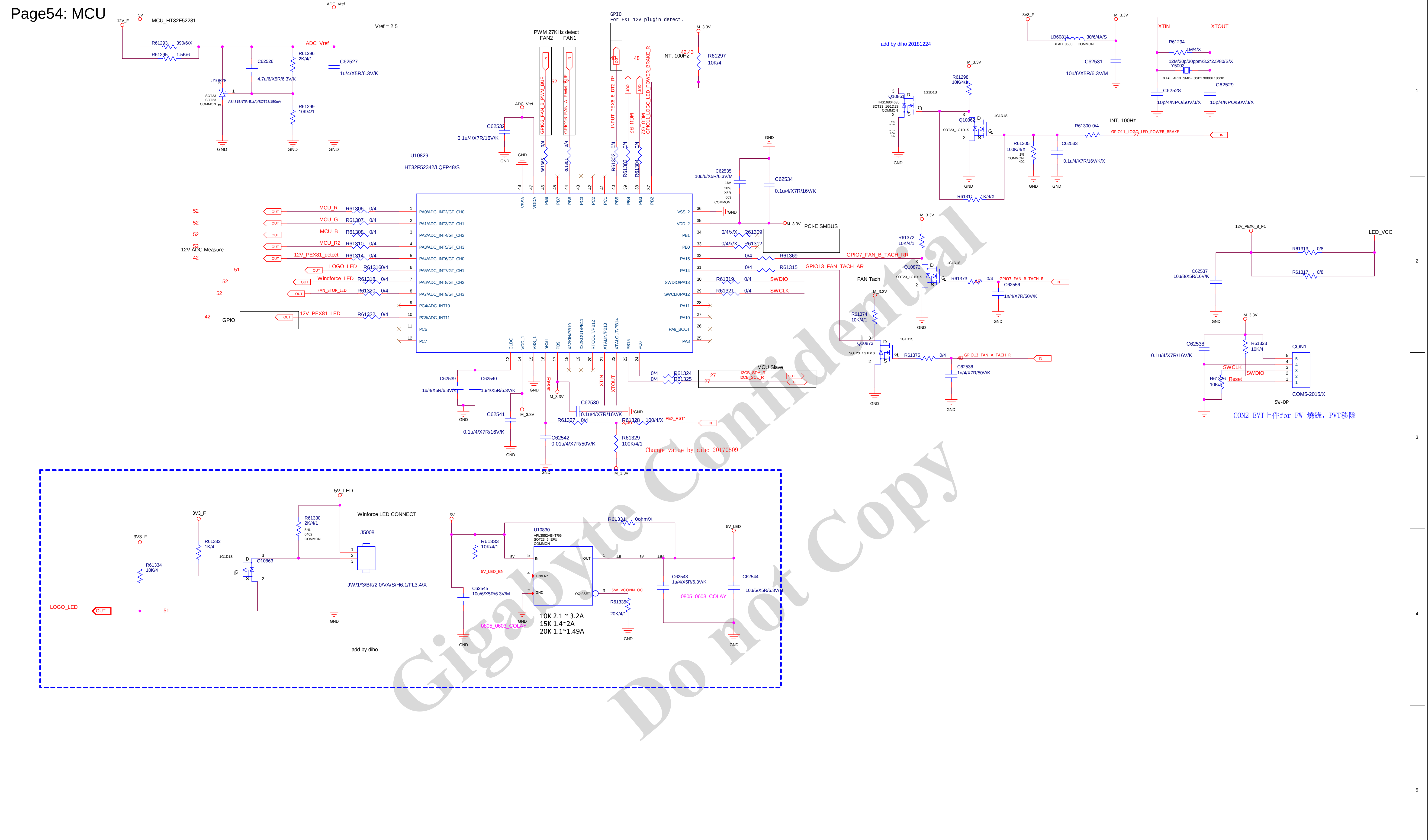

MCU_HT32F52231
12V_F
5V
ADC_Vref
R61293 390/6/X
R61295 1.5K/6
C62526 4.7u/6/X5R/6.3V/K
R61296 2K/4/1
C62527 1u/4/X5R/6.3V/K
U10828
AS431BNTR-E1(A)/SOT23/150mA
R61299 10K/4/1
GND
Vref = 2.5
PWM 27KHz detect
FAN2
FAN1
GPIO3_FAN_B_PWM_BUF
GPIO16_FAN_A_PWM_BUF
GPIO
For EXT 12V plugin detect.
INPUT_PEX6_8_DT2_R*
MCU_B2
MCU_G2
GPIO11_LOGO_LED_POWER_BRAKE_R
M_3.3V
INT, 100Hz
R61297 10K/4
C62532 0.1u/4/X7R/16V/K
U10829
HT32F52342/LQFP48/S
C62535 10u/6/X5R/6.3V/M
C62534 0.1u/4/X7R/16V/K
PA0/ADC_INT2/GT_CH0
PA1/ADC_INT3/GT_CH1
PA2/ADC_INT4/GT_CH2
PA3/ADC_INT5/GT_CH3
PA4/ADC_INT6/GT_CH0
PA5/ADC_INT7/GT_CH1
PA6/ADC_INT8/GT_CH2
PA7/ADC_INT9/GT_CH3
PC4/ADC_INT10
PC5/ADC_INT11
PC6
PC7
VSS_2
VDD_2
PB1
PB0
PA15
PA14
SWDIO/PA13
SWCLK/PA12
PA11
PA10
PA9_BOOT
PA8
MCU_R
MCU_G
MCU_B
MCU_R2
12V ADC Measure
12V_PEX81_detect
LOGO_LED
Windforce_LED
FAN_STOP_LED
12V_PEX81_LED
GPIO
PCI-E SMBUS
R61369
GPIO7_FAN_B_TACH_RR
R61315
GPIO13_FAN_TACH_AR
SWDIO
SWCLK
FAN Tach
MCU Slave
I2CB_SDA_R
I2CB_SCL_R
R61324
R61325
C62539 1u/4/X5R/6.3V/K
C62540 1u/4/X5R/6.3V/K
C62541 0.1u/4/X7R/16V/K
C62530 0.1u/4/X7R/16V/K
Reset
XTIN
XTOUT
R61327
C62542 0.01u/4/X7R/50V/K
R61328 100/4/X
PEX_RST*
R61329 100K/4/1
Change value by diho 20170609
add by diho 20181224
3V3_F
LB60811 30/6/4A/S
C62531 10u/6/X5R/6.3V/M
R61294 1M/4/X
Y5002 12M/20p/30ppm/3.2*2.5/80/S/X
C62528 10p/4/NPO/50V/J/X
C62529 10p/4/NPO/50V/J/X
Q10861
Q10862
R61298 10K/4/X
R61300 0/4
GPIO11_LOGO_LED_POWER_BRAKE
R61305 100K/4/X
C62533 0.1u/4/X7R/16V/K/X
R61311 1K/4/X
Q10872
R61372 10K/4/1
R61373
GPIO7_FAN_B_TACH_R
C62556 1n/4/X7R/50V/K
Q10873
R61374 10K/4/1
R61375
GPIO13_FAN_A_TACH_R
C62536 1n/4/X7R/50V/K
12V_PEX6_8_F1
LED_VCC
R61313 0/8
R61317 0/8
C62537 10u/8/X5R/16V/K
C62538 0.1u/4/X7R/16V/K
R61323 10K/4
R61326 10K/4
CON1
COM5-2015/X
SW-DP
CON2 EVT上件for FW 燒錄，PVT移除
5V_LED
Winforce LED CONNECT
R61330 2K/4/1
J5008
JW/1*3/BK/2.0/VA/S/H6.1/FL3.4/X
R61332 1K/4
Q10863
R61334 10K/4
U10830
APL3552ABI-TRG
R61331 0ohm/X
R61333 10K/4/1
5V_LED_EN
C62545 10u/6/X5R/6.3V/M
C62543 1u/4/X5R/6.3V/K
C62544 10u/6/X5R/6.3V/M
SW_VCONN_OC
R61335 20K/4/1
0805_0603_COLAY
10K 2.1 ~ 3.2A
15K 1.4~2A
20K 1.1~1.49A
add by diho

CONTAIN KNOWN AND UNKNOWN VIOLATIONS OR DEVIATIONS OF INDUSTRY STANDARDS AND SPECIFICATIONS. NVIDIA MAKES NO WARRANTIES, EXPRESSED, IMPLIED, STATUTORY OR OTHERWISE WITH RESPECT TO THE MATERIALS OR OTHERWISE, AND EXPRESSLY DISCLAIMS ALL IMPLIED WARRANTIES INCLUDING, WITHOUT LIMITATION, THE WARRANTIES OF DESIGN, OF NONINFRINGEMENT, MERCHANTABILITY OR FITNESS FOR A PARTICULAR PURPOSE, OR ARISING FROM A COURSE OF DEALING, TRADE USAGE, TRADE PRACTICE, OR INDUSTRY STANDARDS.

GIGABYTE

Title
PCIE

Size: Custom
Document Number: GV-N3060VISION OC-12GD
Rev: 1.01

Date: Thursday, January 14, 2021
Sheet 51 of 54

Page40: LED$_{LED}$

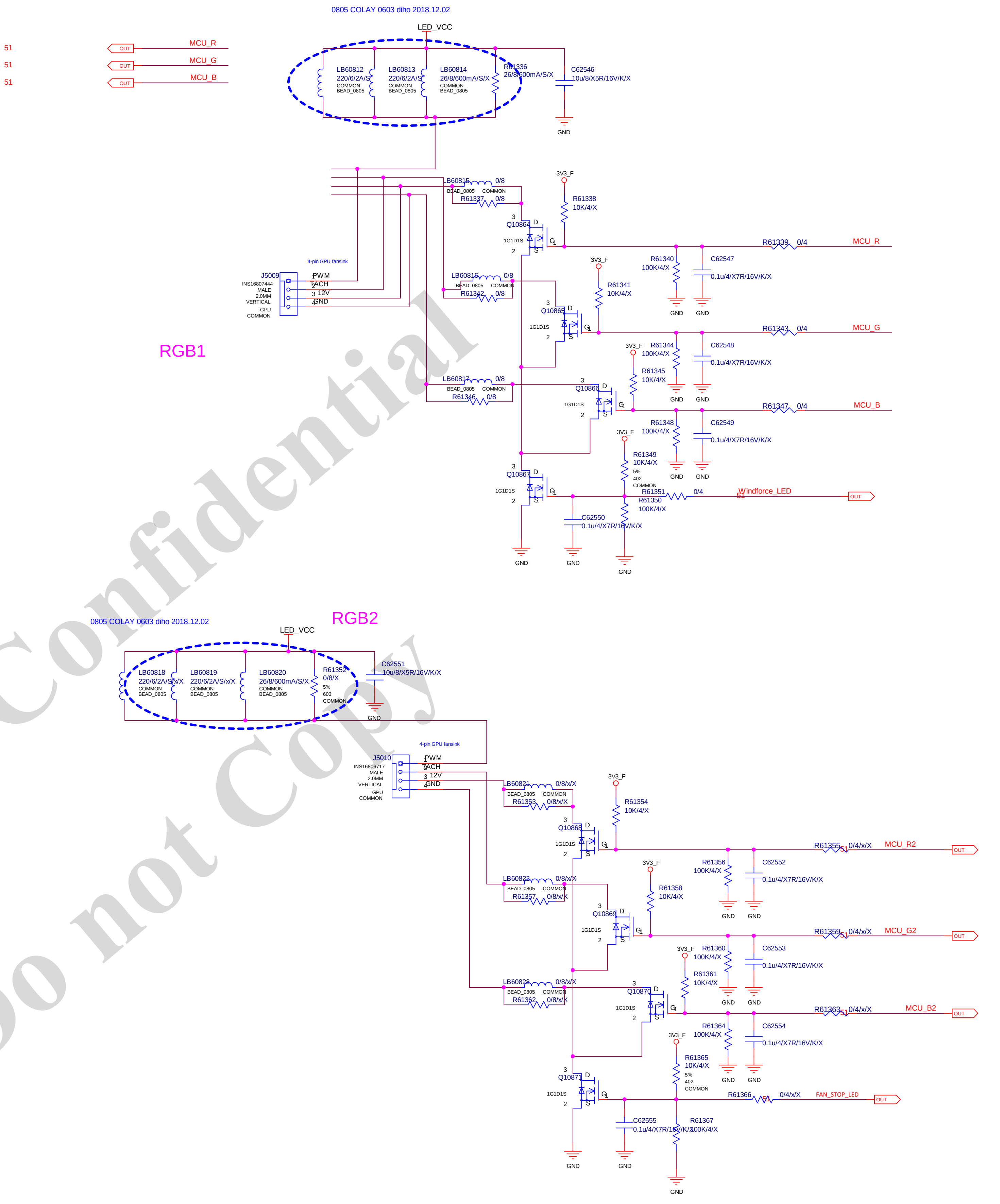

0805 COLAY 0603 diho 2018.12.02
LED_VCC
51 OUT MCU_R
51 OUT MCU_G
51 OUT MCU_B
LB60812 220/6/2A/S/X COMMON BEAD_0805
LB60813 220/6/2A/S/X COMMON BEAD_0805
LB60814 26/8/600mA/S/X COMMON BEAD_0805
R61336 26/8/600mA/S/X
C62546 10u/8/X5R/16V/K/X
GND
LB60815 0/8 BEAD_0805 COMMON
R61337 0/8
3V3_F
R61338 10K/4/X
Q10864 1G1D1S D G S
J5009 INS16807444 MALE 2.0MM VERTICAL GPU COMMON
4-pin GPU fansink
PWM
TACH
12V
GND
LB60816 0/8 BEAD_0805 COMMON
R61342 0/8
Q10865
R61341 10K/4/X
R61339 0/4 MCU_R
R61340 100K/4/X
C62547 0.1u/4/X7R/16V/K/X
R61343 0/4 MCU_G
R61344 100K/4/X
C62548 0.1u/4/X7R/16V/K/X
RGB1
LB60817 0/8 BEAD_0805 COMMON
R61346 0/8
Q10866
R61345 10K/4/X
R61347 0/4 MCU_B
R61348 100K/4/X
C62549 0.1u/4/X7R/16V/K/X
R61349 10K/4/X 5% 402 COMMON
Q10867
R61351 0/4 Windforce_LED OUT
R61350 100K/4/X
C62550 0.1u/4/X7R/16V/K/X
RGB2
0805 COLAY 0603 diho 2018.12.02
LED_VCC
LB60818 220/6/2A/S/X COMMON BEAD_0805
LB60819 220/6/2A/S/X COMMON BEAD_0805
LB60820 26/8/600mA/S/X COMMON BEAD_0805
R61352 0/8/X 5% 603 COMMON
C62551 10u/8/X5R/16V/K/X
J5010 INS16808717 MALE 2.0MM VERTICAL GPU COMMON
4-pin GPU fansink
LB60821 0/8/x/X BEAD_0805 COMMON
R61353 0/8/x/X
R61354 10K/4/X
Q10868
R61355 0/4/x/X MCU_R2 OUT
R61356 100K/4/X
C62552 0.1u/4/X7R/16V/K/X
LB60822 0/8/x/X BEAD_0805 COMMON
R61357 0/8/x/X
R61358 10K/4/X
Q10869
R61359 0/4/x/X MCU_G2 OUT
R61360 100K/4/X
C62553 0.1u/4/X7R/16V/K/X
LB60823 0/8/x/X BEAD_0805 COMMON
R61362 0/8/x/X
R61361 10K/4/X
Q10870
R61363 0/4/x/X MCU_B2 OUT
R61364 100K/4/X
C62554 0.1u/4/X7R/16V/K/X
R61365 10K/4/X 5% 402 COMMON
Q10871
R61366 0/4/x/X FAN_STOP_LED OUT
C62555 0.1u/4/X7R/16V/K/X
R61367 100K/4/X

ASSEMBLY
PAGE DETAIL

<ASSEMBLY_DESCRIPTION>
MECH

ALL NVIDIA DESIGN SPECIFICATIONS, REFERENCE SPECIFICATIONS, REFERENCE BOARDS, FILES, DRAWINGS, DIAGNOSTICS, LISTS AND OTHER DOCUMENTS OR INFORMATION (TOGETHER AND SEPARATELY, 'MATERIALS') ARE BEING PROVIDED 'AS IS'. THE MATERIALS MAY CONTAIN KNOWN AND UNKNOWN VIOLATIONS OR DEVIATIONS OF INDUSTRY STANDARDS AND SPECIFICATIONS. NVIDIA MAKES NO WARRANTIES, EXPRESSED, IMPLIED, STATUTORY OR OTHERWISE WITH RESPECT TO THE MATERIALS OR OTHERWISE, AND EXPRESSLY DISCLAIMS ALL IMPLIED WARRANTIES INCLUDING, WITHOUT LIMITATION, THE WARRANTIES OF DESIGN, OF NONINFRINGEMENT, MERCHANTABILITY OR FITNESS FOR A PARTICULAR PURPOSE, OR ARISING FROM A COURSE OF DEALING, USAGE, TRADE USAGE, TRADE PRACTICE, OR INDUSTRY STANDARDS.

GIGABYTE

Title
PCIE

Size	Document Number	Rev
Custom	GV-N3060VISION OC-12GD	1.01

Date: Thursday, January 14, 2021 Sheet 52 of 54

BIOS Switch

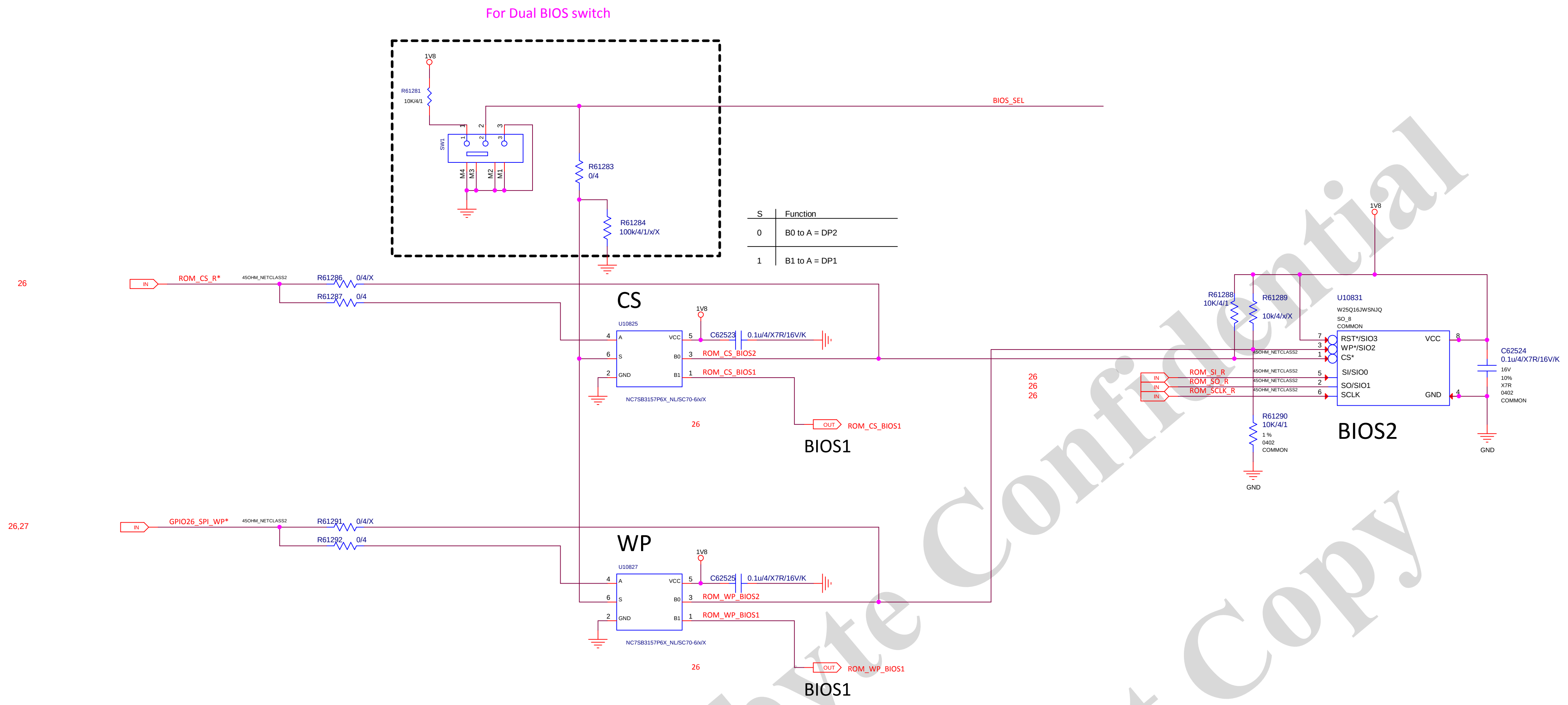
For Dual BIOS switch
1V8
R61281
10K/4/1
SW1
1 2 3
M4 M3 M2 M1
R61283
0/4
R61284
100k/4/1/x/X
BIOS_SEL
26
IN
ROM_CS_R*
45OHM_NETCLASS2
R61286 0/4/X
R61287 0/4
CS
U10825
1V8
C62523 0.1u/4/X7R/16V/K
A VCC
S B0
GND B1
ROM_CS_BIOS2
ROM_CS_BIOS1
NC7SB3157P6X_NL/SC70-6/x/X
26
OUT
ROM_CS_BIOS1
BIOS1
26,27
IN
GPIO26_SPI_WP*
45OHM_NETCLASS2
R61291 0/4/X
R61292 0/4
WP
U10827
1V8
C62525 0.1u/4/X7R/16V/K
ROM_WP_BIOS2
ROM_WP_BIOS1
NC7SB3157P6X_NL/SC70-6/x/X
26
OUT
ROM_WP_BIOS1
BIOS1
1V8
R61288
10K/4/1
R61289
10k/4/x/X
U10831
W25Q16JWSNJQ
SO_8
COMMON
RST*/SIO3
WP*/SIO2
CS*
SI/SIO0
SO/SIO1
SCLK
VCC
GND
26
26
26
IN
ROM_SI_R
ROM_SO_R
ROM_SCLK_R
45OHM_NETCLASS2
R61290
10K/4/1
1 %
0402
COMMON
GND
C62524
0.1u/4/X7R/16V/K
16V
10%
X7R
0402
COMMON
GND
BIOS2

S	Function
0	B0 to A = DP2
1	B1 to A = DP1

ASSEMBLY
PAGE DETAIL

<ASSEMBLY_DESCRIPTION>
MCU ZERO POWER IDLE

ALL NVIDIA DESIGN SPECIFICATIONS, REFERENCE SPECIFICATIONS, REFERENCE BOARDS, FILES, DRAWINGS, DIAGNOSTICS, LISTS AND OTHER DOCUMENTS OR INFORMATION (TOGETHER AND SEPARATELY, 'MATERIALS') ARE BEING PROVIDED 'AS IS'. THE MATERIALS MAY CONTAIN KNOWN AND UNKNOWN VIOLATIONS OR DEVIATIONS OF INDUSTRY STANDARDS AND SPECIFICATIONS. NVIDIA MAKES NO WARRANTIES, EXPRESSED, IMPLIED, STATUTORY OR OTHERWISE WITH RESPECT TO THE MATERIALS OR OTHERWISE, AND EXPRESSLY DISCLAIMS ALL IMPLIED WARRANTIES INCLUDING, WITHOUT LIMITATION, THE WARRANTIES OF DESIGN, OF NONINFRINGEMENT, MERCHANTABILITY OR FITNESS FOR A PARTICULAR PURPOSE, OR ARISING FROM A COURSE OF DEALING, TRADE USAGE, TRADE PRACTICE, OR INDUSTRY STANDARDS.

GIGABYTE

Title
PCIE

Size Custom
Document Number GV-N3060VISION OC-12GD
Rev 1.01

Date: Thursday, January 14, 2021
Sheet 53 of 54

History

Date	Modify
2020.08.06	First version

GIGABYTE		
Title PCIE		
Size Custom	Document Number GV-N3060VISION OC-12GD	Rev 1.01
Date: Thursday, January 14, 2021	Sheet 54 of 54	