SAMSUNG CONFIDENTIAL
THIS DOCUMENT CONTAINS CONFIDENTIAL PROPRIETARY INFORMATION THAT IS SAMSUNG ELECTRONICS CO'S PROPERTY. DO NOT DISCLOSE TO OR DUPLICATE FOR OTHERS EXCEPT AS AUTHORIZED BY SAMSUNG.

SM-G986U MASTER REV0.5A

SM-G986U Common

2019. 11. 28

1216 OPEN -> NC

sheet01 : RF (1/2)
sheet02 : RF (2/2)
sheet03 : BT/WIFI, SIM, SHILDCAN
sheet04 : NFC, MFC, OVP LS, SENSORS
sheet05 : AP_SM8250
sheet06 : AP_SM8250 POWER/GND, JTAG, UFS
sheet07 : PM8250, IF PMIC(CC IC), D/C
sheet08 : AUDIO
sheet09 : CAMERA
sheet10 : DISPLAY
sheet11 : CP_SDX55M
sheet12 : CP PMIC, 5G IFIC, 5G Conn
sheet13 : INTERPOSER

Engineer:
Drawn by:
R&D CHK:
DOC CTRL CHK:
SPG ENGR CHK:
QA CHK:
TITLE:
Size:
Changed by: alan3
Date Changed:
Time Changed:
REV:
Drawing Number:
Page: 1

SAMSUNG CONFIDENTIAL
THIS DOCUMENT CONTAINS CONFIDENTIAL
AND PROPRIETARY INFORMATION OF
SAMSUNG ELECTRONICS CO. LTD. PROPERTY.
DO NOT DISCLOSE TO OR DUPLICATE FOR OTHERS
EXCEPT AS AUTHORIZED BY SAMSUNG.

MAIN ANT

MAIN1-1 ANT

MAIN1-2 ANT

MAIN4 ANT

MAIN2 ANT

M1-1

M4

M1-2
M2

M3

MAIN3 ANT

FRC connector

JPN

LTE_B21

2G_PA

THERMISTER

LB LPAMID
(B5/8/12/13/14/17/20/26/28/29/71, G850/900, BC0/10)

OMH LPAMID
(B1/2/3/4/7/25/30/34/38/39/40/41/66, G1800/1900, BC1)

UHB
(B48, n77/78/79)

ET Modulator(QET5100#0)

low thickness

ET Modulator(QET5100#1)

low thickness

Engineer:	SEC
Drawn by:	SEC
R&D CHK:	
DOC CTRL CHK:	
MFG ENGR CHK:	
QA CHK:	

TITLE: **SM8250 + SDX55M**

SIZE | Drawing Number:

Changed by:	Date Changed:	Time Changed:

SAMSUNG CONFIDENTIAL
THIS DOCUMENT CONTAINS CONFIDENTIAL PROPRIETARY INFORMATION THAT IS SAMSUNG ELECTRONICS CO'S PROPERTY. DO NOT DISCLOSE TO OR DUPLICATE FOR OTHERS EXCEPT AS AUTHORIZED BY SAMSUNG.

TRANSCEIVER(SDR865)

DRX_ANT

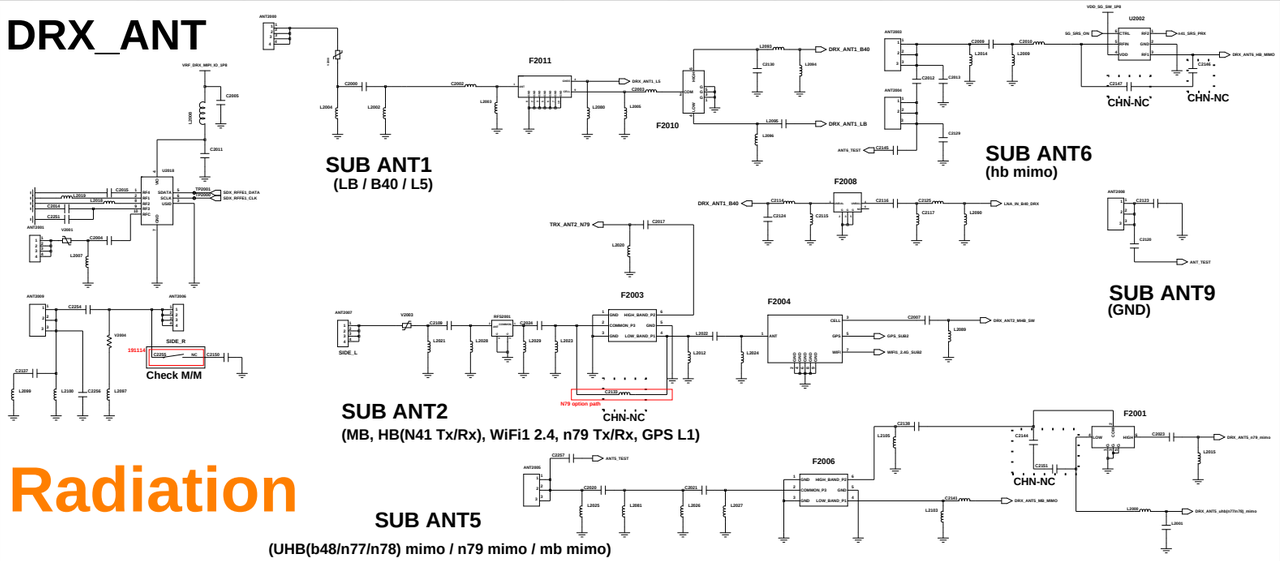

Radiation

DRX_LB

(B5/8/12/13/14/17/18/19/20/26/28/29/71_BC0/10_G850/900)

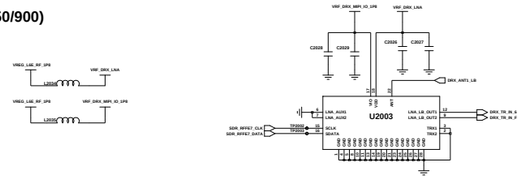

Conduction

DRX_MHB_1

(B1/2/3/4/7/25/30/39/41/66_BC1_DCS/PCS)

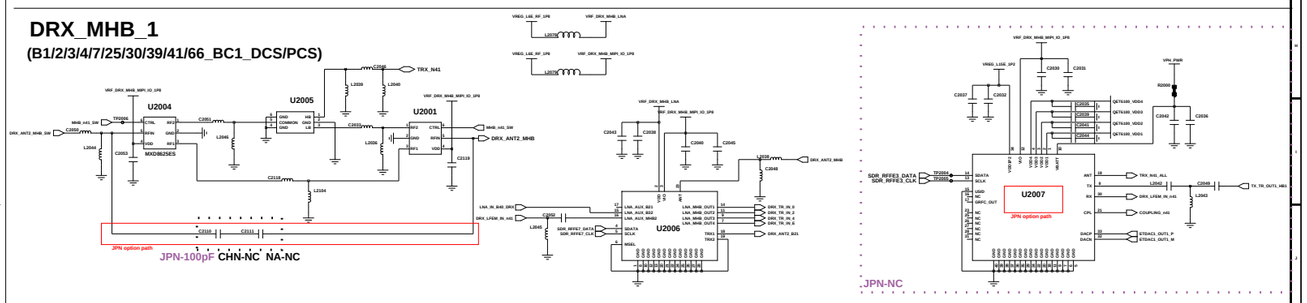

Conduction

QET6100

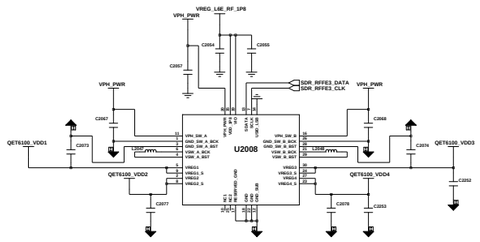

DRX_MHB_2

(B2/4/7/25/30/41/66)

UHB

(n79)

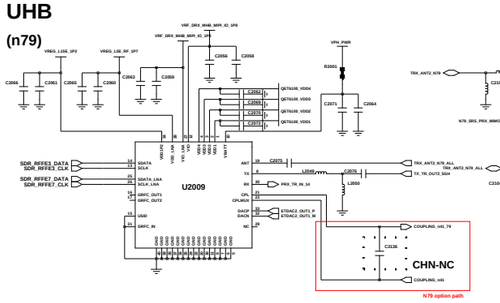

SRS - 1T4R (n79)

Port	1P4T	
RF2	TRX RX0	Upper PRX
RF1	DRX RX3	Upper DRX MIMO
RF3	DRX RX1	Lower DRX
RF4	PRX RX2	Lower PRX MIMO

Connectivity

GPS_L1

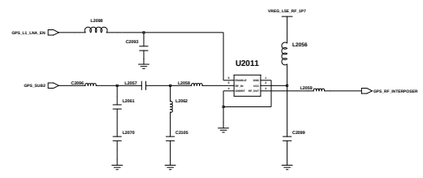

GPS_L5

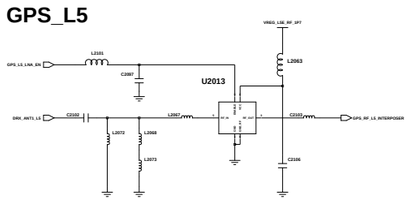

UHB

(B48, n77/78)

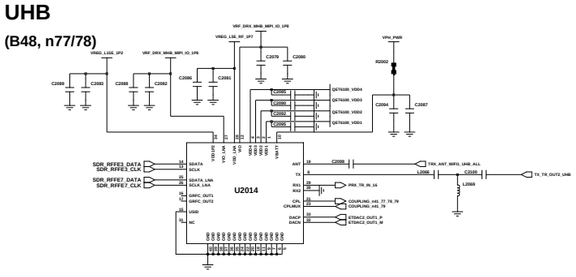

SRS - 1T2R

(n41)

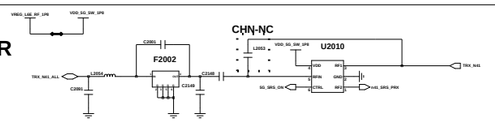

SRS - 1T4R (n78)

Port	1P4T	
RF2	TRX RX0	Upper PRX
RF1	DRX RX3	Upper DRX MIMO
RF3	DRX RX1	Lower DRX
RF4	PRX RX2	Lower PRX MIMO

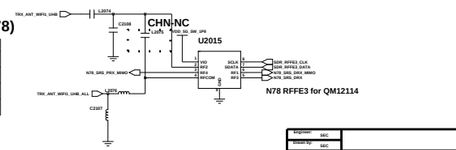

Engineer:	SEC
Drawn by:	SEC
Part Code:	
Title:	SM8250 + SDX55M
Size:	
Drawing Number:	

SAMSUNG CONFIDENTIAL
THIS DOCUMENT CONTAINS CONFIDENTIAL PROPRIETARY INFORMATION THAT IS SAMSUNG ELECTRONICS CO'S PROPERTY. DO NOT DISCLOSE TO OR DUPLICATE FOR OTHERS EXCEPT AS AUTHORIZED BY SAMSUNG.

Connectivity

BT/WIFI
(Broadcom module)

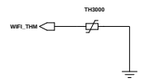

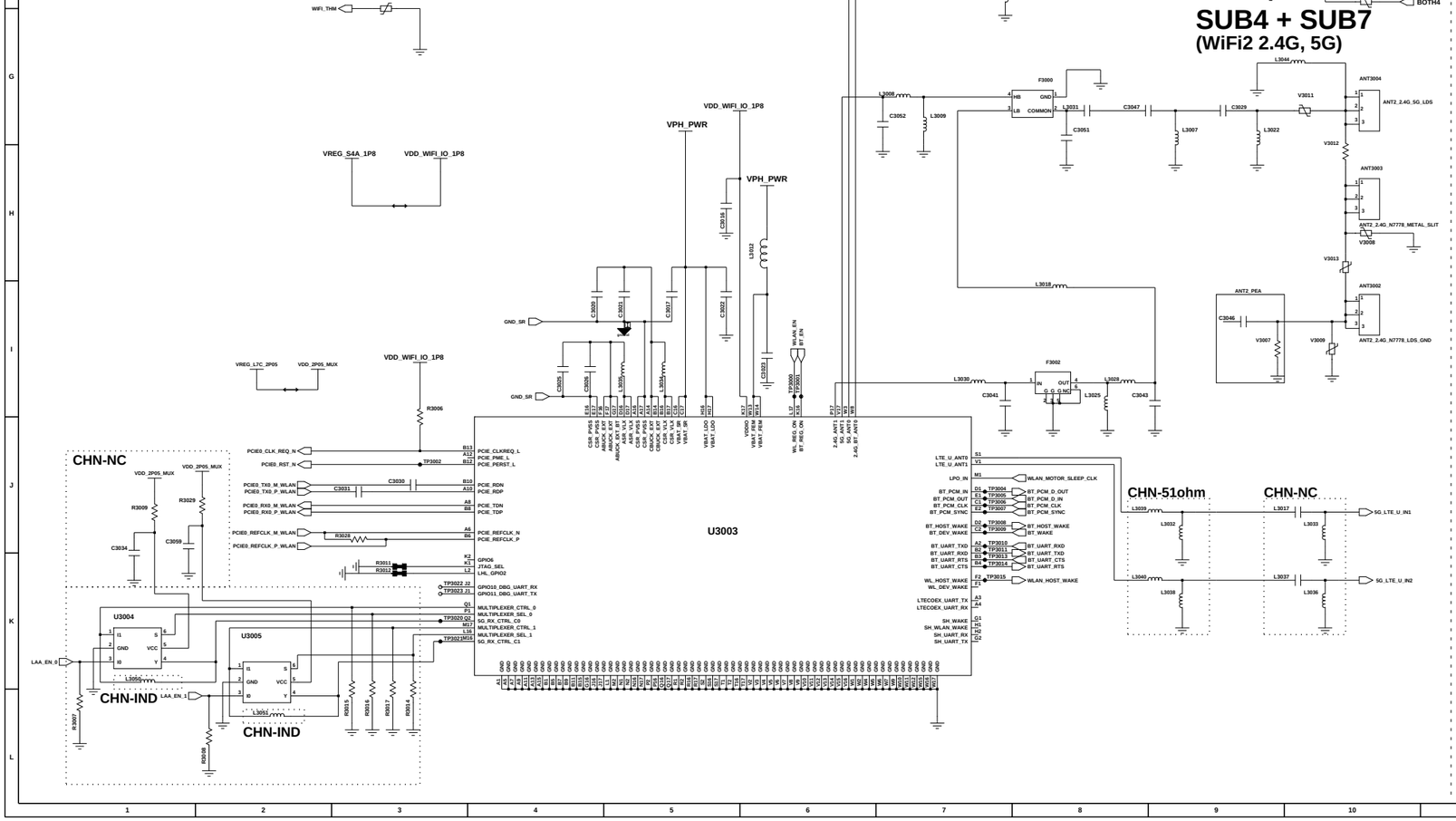

Conduction

CHN-NC

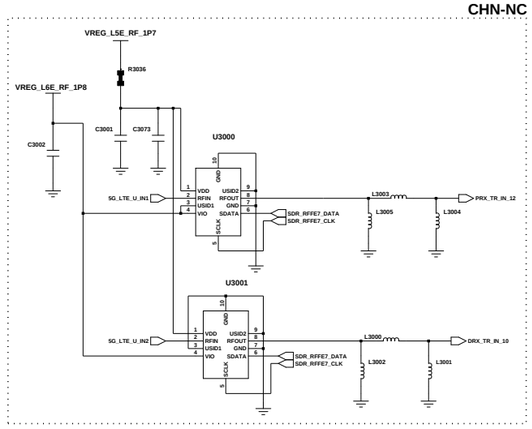

Design

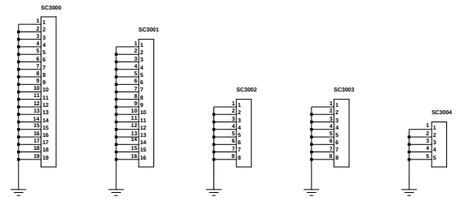

SHIELDCAN

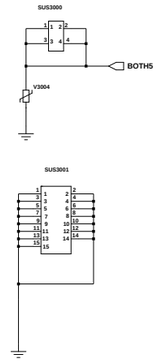

SUS

SUB3
(WiFi1 5G, n78 Tx/Rx)

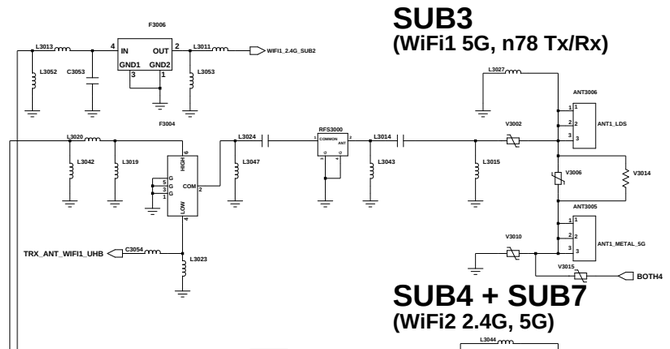

SUB4 + SUB7
(WiFi2 2.4G, 5G)

System

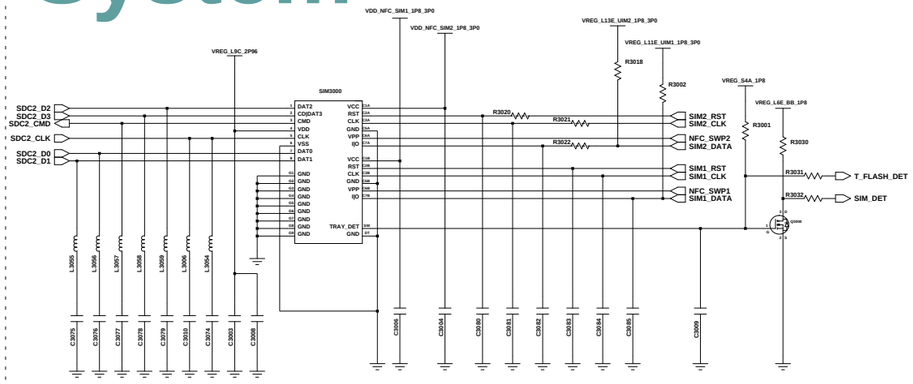

SIM & SD SOCKET

e-SIM

Engineer: SEC			
Drawn by: SEC			
R&D CHK:		TITLE: SM8250 + SDX55M	Size:
DOC CTRL CHK:			
MFG ENGR CHK:			
QA CHK:	REV	Drawing Number:	Page: 3
Changed by: user118	Date Changed:	Time Changed:	

SAMSUNG CONFIDENTIAL
THIS DOCUMENT CONTAINS CONFIDENTIAL PROPRIETARY INFORMATION THAT IS SAMSUNG ELECTRONICS CO'S PROPERTY. DO NOT DISCLOSE TO OR DUPLICATE FOR OTHERS EXCEPT AS AUTHORIZED BY SAMSUNG.

Connectivity

NFC

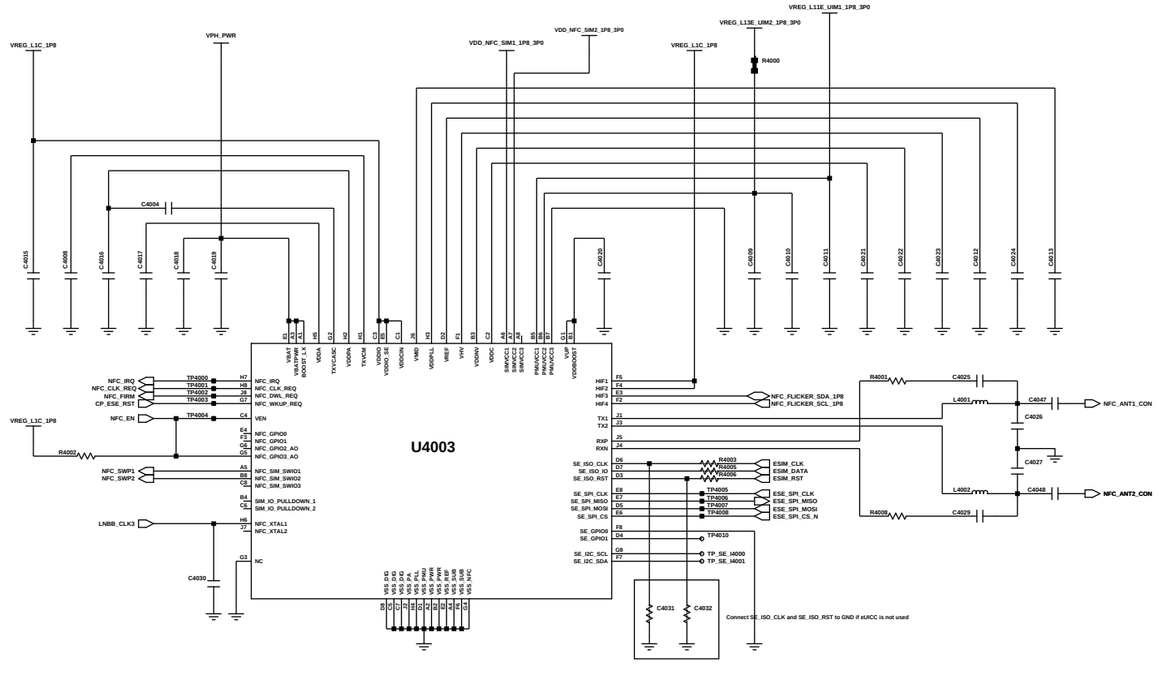

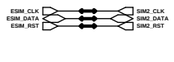

Power

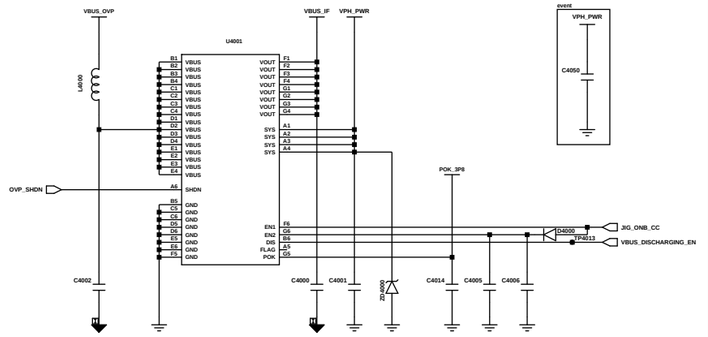

OVP LS

System

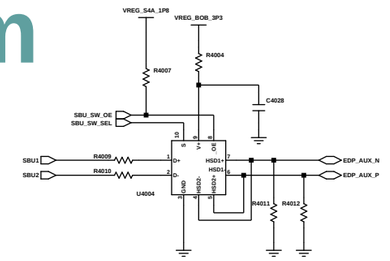

AUX sw

MFC

MST Switch

W/C CONNECTOR

SENSORS

Barometer SENSOR

6 Axis SENSOR (GYRO,ACCEL)

Power

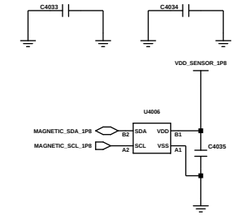

Magnetic SENSOR

Visual

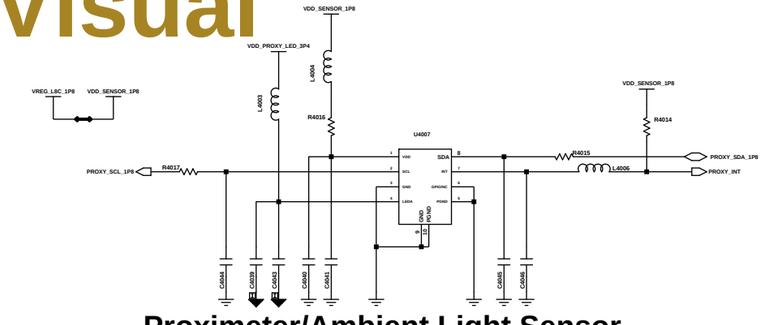

Proximeter/Ambient Light Sensor

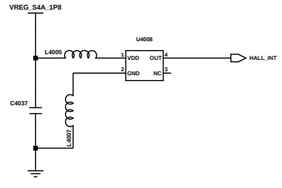

COVER_DET HALL_IC

Engineer:	SEC
Drawn by:	SEC
R&D CHK:	
DOC CTRL CHK:	
MFG ENGR CHK:	
QA CHK:	
TITLE:	SM8250 + SDX55M
Size:	16 1 12 A
REV:	
Drawing Number:	
Page:	4
Changed by:	user33
Date Changed:	Friday, April 11, 2014
Time Changed:	11:27:03 am

SAMSUNG CONFIDENTIAL
THIS DOCUMENT CONTAINS CONFIDENTIAL PROPRIETARY INFORMATION THAT IS SAMSUNG ELECTRONICS CO'S PROPERTY. DO NOT DISCLOSE TO OR DUPLICATE FOR OTHERS EXCEPT AS AUTHORIZED BY SAMSUNG.

SM8250

(INTERFACE, GPIO, GND)

System

C-PHY

UCP500-1

[1/4]

UCP500-3

[3/4]

UCP500-4

[4/4]

2D BARCODE

UFS

128G

512G

256G

USA

CHN

CAN

KOR

I2C PULL UP

Engineer	SEC
Drawn by:	SEC
R&D CHK:	
DOC CTRL CHK:	
MFG ENGR CHK:	
TITLE:	SM8250 + SDX55M
Size:	
Drawing Number	
Changed by:	
Date Changed:	
Time Changed:	
QA CHK:	

SAMSUNG CONFIDENTIAL
THIS DOCUMENT CONTAINS CONFIDENTIAL PROPRIETARY INFORMATION THAT IS SAMSUNG ELECTRONICS CO'S PROPERTY. DO NOT DISCLOSE TO OR DUPLICATE FOR OTHERS EXCEPT AS AUTHORIZED BY SAMSUNG.

SM8250

(POWER & DeCAP)

Power System

UCP500-2

[2/4]

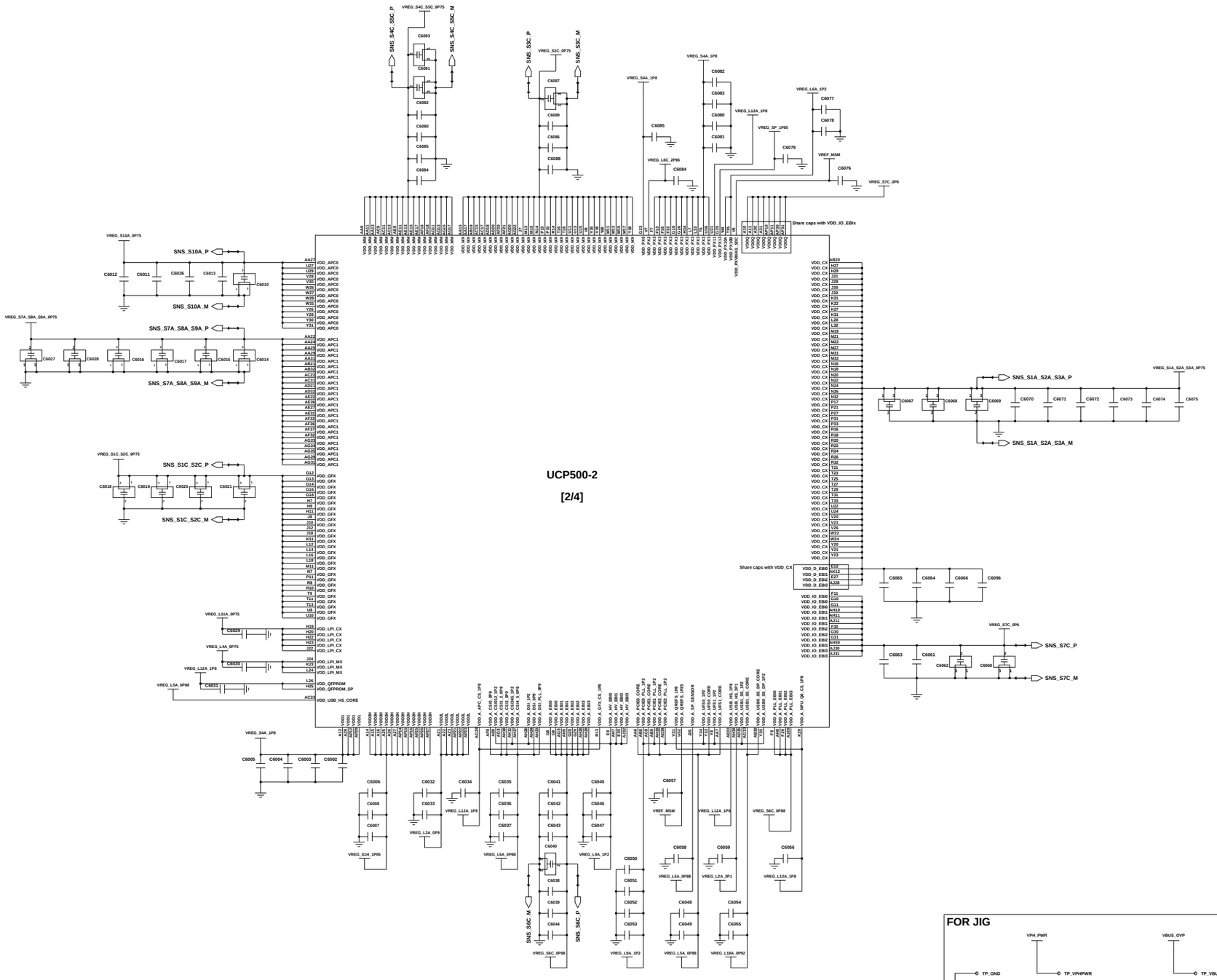

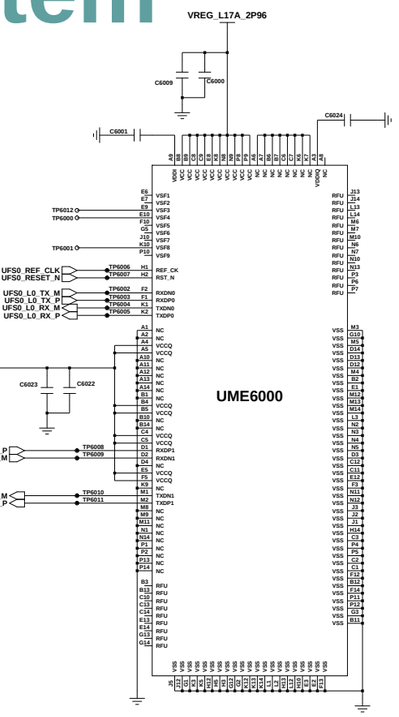

UFS 128GB / 512GB

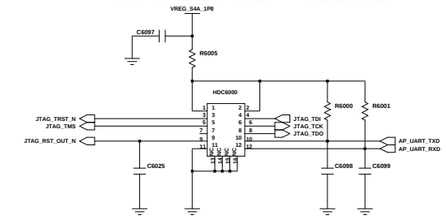

AP JTAG CONNECTOR

(3711-007173 / AXE612124)

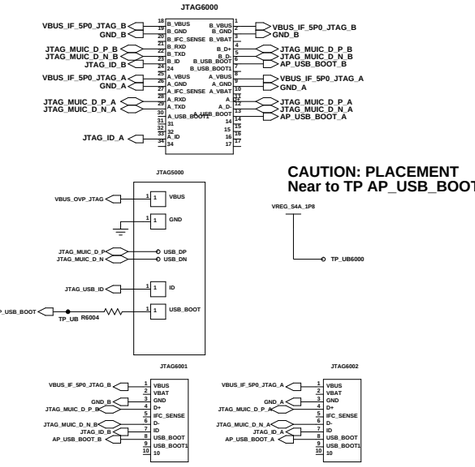

CAUTION: PLACEMENT
Near to TP AP_USB_BOOT

PCB array JTAG

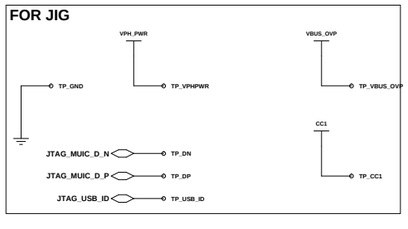

Changed by:		Date Changed:		Time Changed:	QA CHK:	REV	Drawing Number:								Page:

Engineer: SEC	
Drawn by: SEC	
R&D CHK:	TITLE: SM8250 + SDX55M
DOC CTRL CHK:	Size:
MFG ENGR CHK:	

SAMSUNG CONFIDENTIAL
THIS DOCUMENT CONTAINS CONFIDENTIAL INFORMATION AND PROPRIETARY TO SAMSUNG ELECTRONICS CO.LTD. PROPERTY. DO NOT DISCLOSE TO OR DUPLICATE FOR OTHERS EXCEPT AS AUTHORIZED BY SAMSUNG.

AP PMIC set & CLK Generator

Power System

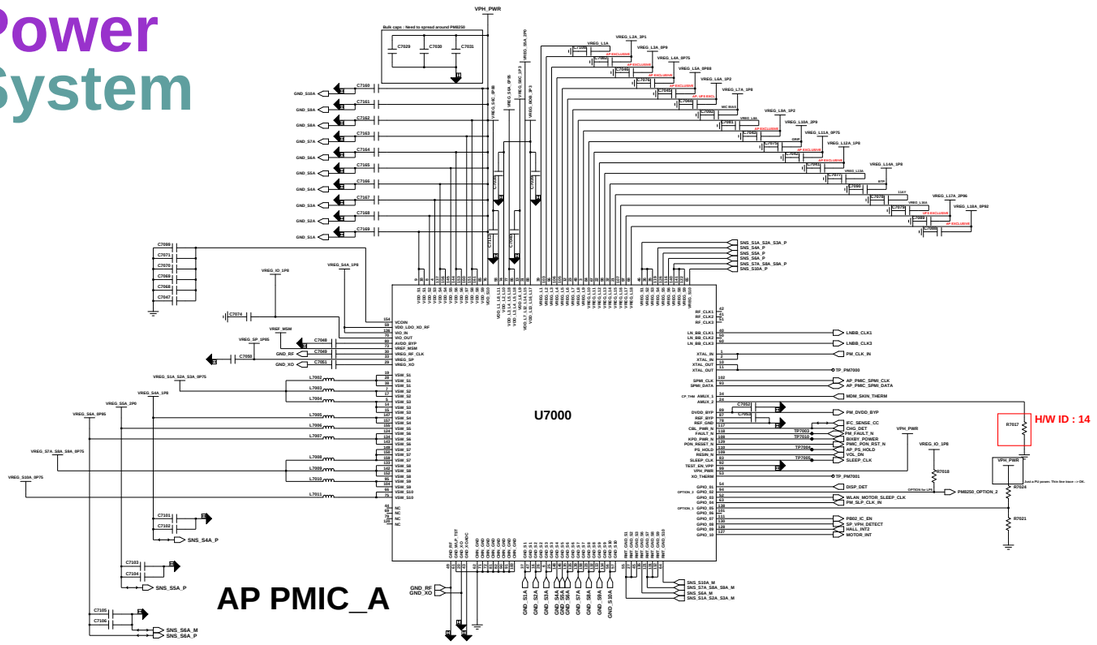
U7000
VPH_PWR
VREG_S4A_1P8
VREG_L3A_1P8
VREG_L4A_1P8
VREG_L5A_1P8
VREG_L6A_1P8
VREG_L7A_1P8
VREG_L8A_1P8
VREG_L9A_1P8
VREG_L10A_1P8
VREG_L11A_1P8
VREG_L12A_1P8
VREG_L13A_2P95
VREG_L14A_1P8
VREG_L15A_1P8
VREG_L16A_2P7
VREG_L17A_2P96
VREG_L18A_2P92
VREG_L19A_2P85
VREG_L20A_2P95
VREG_L21A_2P95
VREG_L22A_2P95
VREG_L23A_2P95
VREG_L24A_2P95
VREG_L25A_1P8
VREG_L26A_1P8
VREG_L27A_1P8
VREG_L28A_2P95
VREG_L29A_2P95
VREG_L30A_2P95
VREG_L31A_2P95
VREG_L32A_1P8
VREG_S1A_1P35
VREG_S2A_1P13
VREG_S3A_1P35
VREG_S4A_2P05
VREG_S5A_2P05
VREG_S6A_1P8
VREG_S7A_1P8
VREG_S8A_1P35
VREG_S9A_1P35
VREG_S10A_1P8
VREG_S11A_2P05
VREG_S12A_1P8
VREG_S13A_1P8
VREG_S14A_2P05
VREG_S15A_2P05
VREG_S16A_2P05
VREG_S17A_2P05
VREG_S18A_2P05
VREG_S19A_2P05
VREG_S20A_2P05
VREG_S21A_2P05
VREG_S22A_2P05
VREG_S23A_2P05
VREG_S24A_2P05
VREG_S25A_2P05
VREG_S26A_2P05
VREG_S27A_2P05
VREG_S28A_2P05
VREG_S29A_2P05
VREG_S30A_2P05
VREG_S31A_2P05
VREG_S32A_2P05
VREG_S33A_2P05
VREG_S34A_2P05
VREG_S35A_2P05
VREG_S36A_2P05
VREG_S37A_2P05
VREG_S38A_2P05
VREG_S39A_2P05
VREG_S40A_2P05
VREG_S41A_2P05
VREG_S42A_2P05
VREG_S43A_2P05
VREG_S44A_2P05
VREG_S45A_2P05
VREG_S46A_2P05
VREG_S47A_2P05
VREG_S48A_2P05
VREG_S49A_2P05
VREG_S50A_2P05
VREG_S51A_2P05
VREG_S52A_2P05
VREG_S53A_2P05

SAMSUNG CONFIDENTIAL
THIS DOCUMENT CONTAINS CONFIDENTIAL PROPRIETARY INFORMATION THAT IS SAMSUNG ELECTRONICS CO'S PROPERTY. DO NOT DISCLOSE TO OR DUPLICATE FOR OTHERS EXCEPT AS AUTHORIZED BY SAMSUNG.

AUDIO PART

AUDIO

SPK AMP

SPK CONTACT

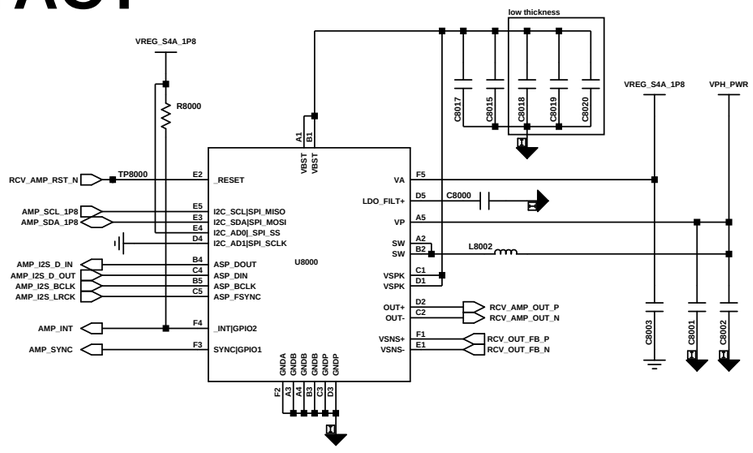

RCV AMP

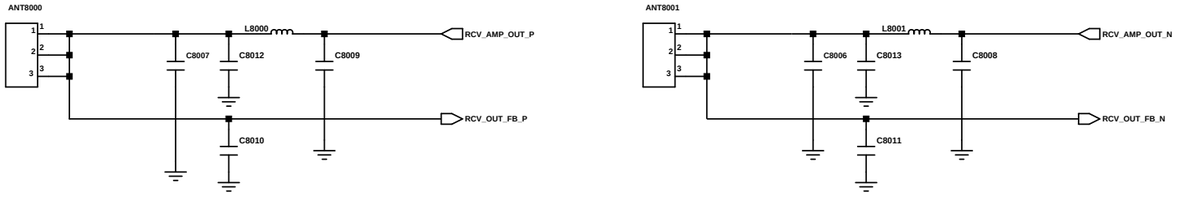

RCV CONTACT

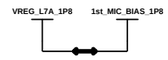

MAIN MIC

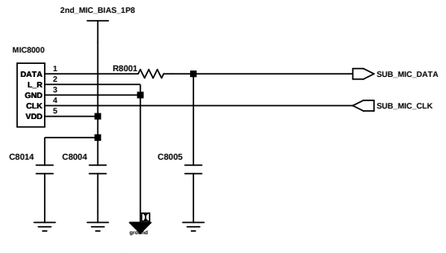

2nd MIC

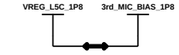

3rd MIC

Changed by: user	Date Changed: Tuesday, April 2, 2019	Time Changed: 4:11:40 pm	QA CHK:	REV	Drawing Number:	Page: 8

Engineer: SEC	SAMSUNG ELECTRONICS	
Drawn by: SEC		
R&D CHK:	TITLE: SM8250 + SDX55M	Size: 12 1 8 A
DOC CTRL CHK:		
MFG ENGR CHK:		

SAMSUNG CONFIDENTIAL
THIS DOCUMENT CONTAINS CONFIDENTIAL PROPRIETARY INFORMATION THAT IS SAMSUNG ELECTRONICS CO'S PROPERTY. DO NOT DISCLOSE TO OR DUPLICATE FOR OTHERS EXCEPT AS AUTHORIZED BY SAMSUNG.

CAMERA

Visual

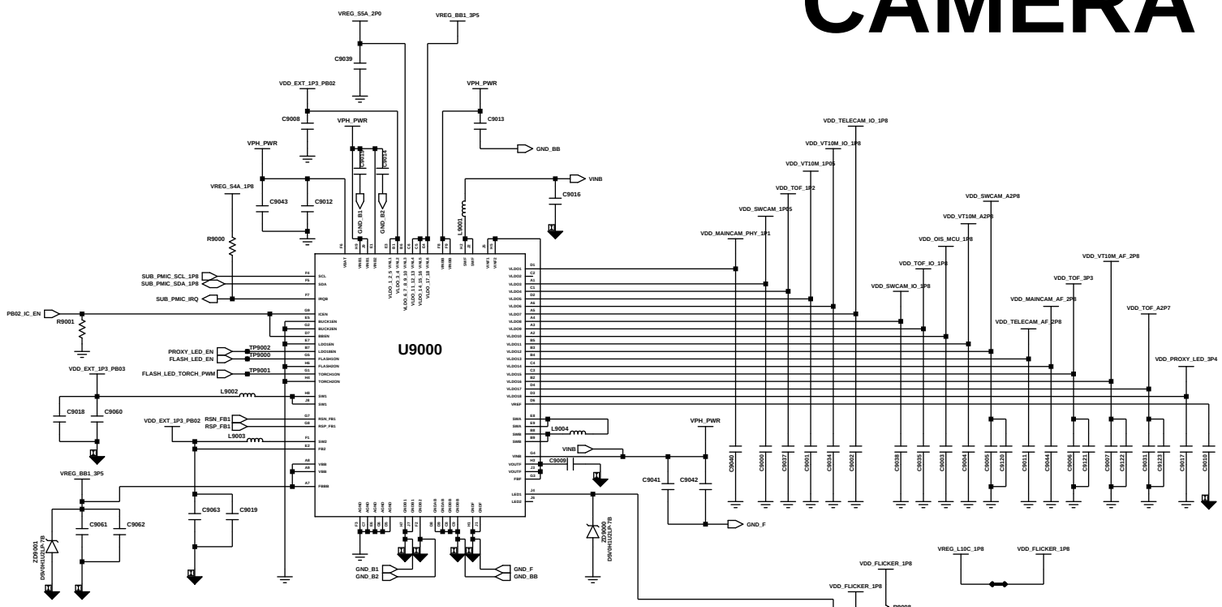

CAM PMIC (PB02)

2ND CAM PMIC (PB03)

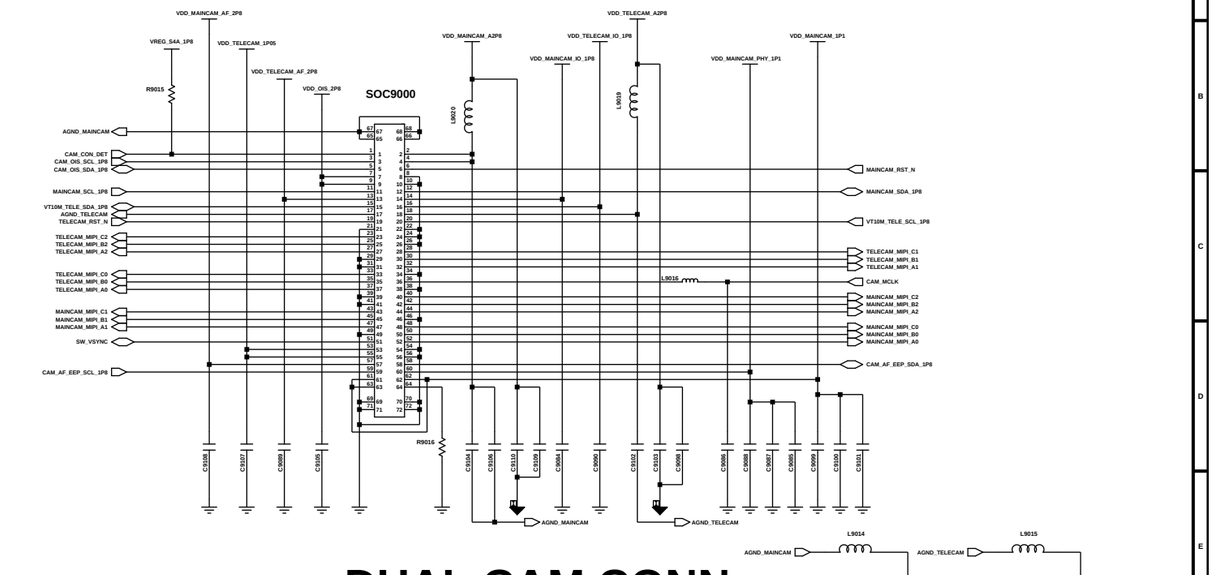

DUAL CAM CONN

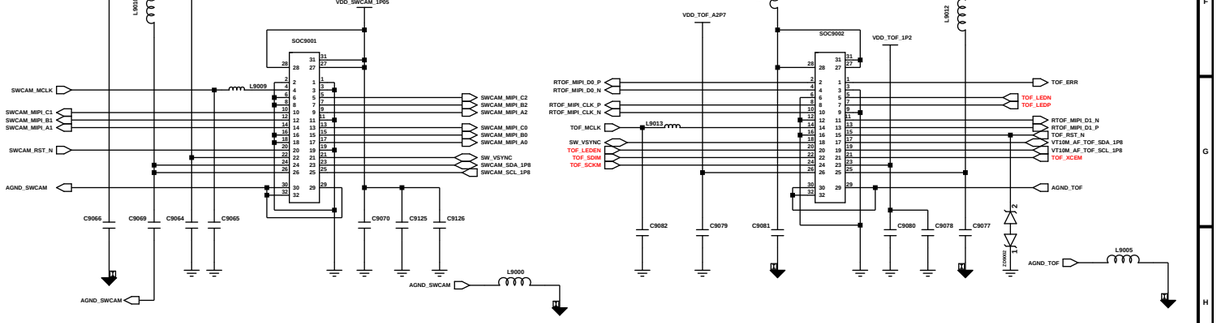

SUPER WIDE CAM CONN

REAR TOF CAM CONN

TOF

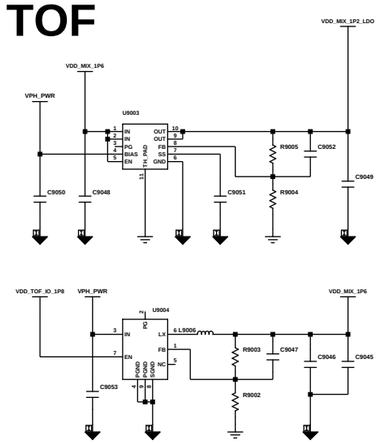

TOF VGA POWER

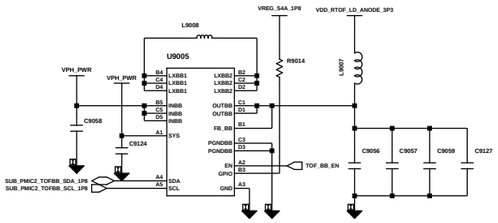

TOF LED

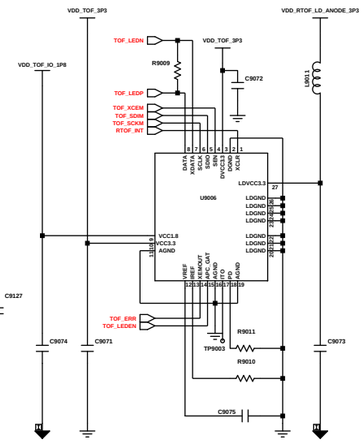

TOF TX

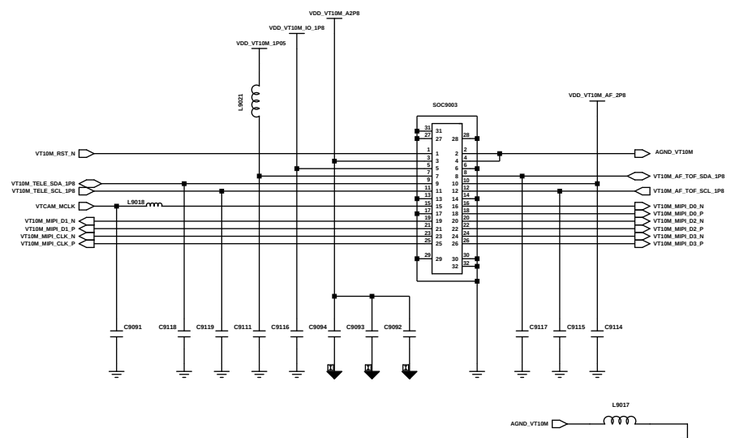

FRONT CAM(10M SINGLE)

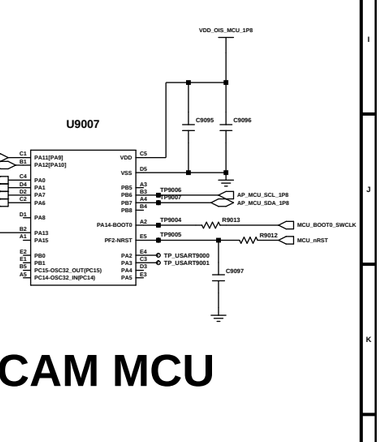

CAM MCU

Engineer:	SEC		
Drawn by:	SEC		
R&D CHK:		TITLE:	SM8250 + SDX55M
DOC CTRL CHK:		Size:	
MFG ENGR CHK:			
Changed by:	Date Changed:	Time Changed:	QA CHK:
			REV:
Drawing Number:		Page:	

SAMSUNG CONFIDENTIAL
THIS DOCUMENT CONTAINS CONFIDENTIAL PROPRIETARY INFORMATION THAT IS SAMSUNG ELECTRONICS CO'S PROPERTY. DO NOT DISCLOSE TO OR DUPLICATE FOR OTHERS EXCEPT AS AUTHORIZED BY SAMSUNG.

DISPLAY

Visual

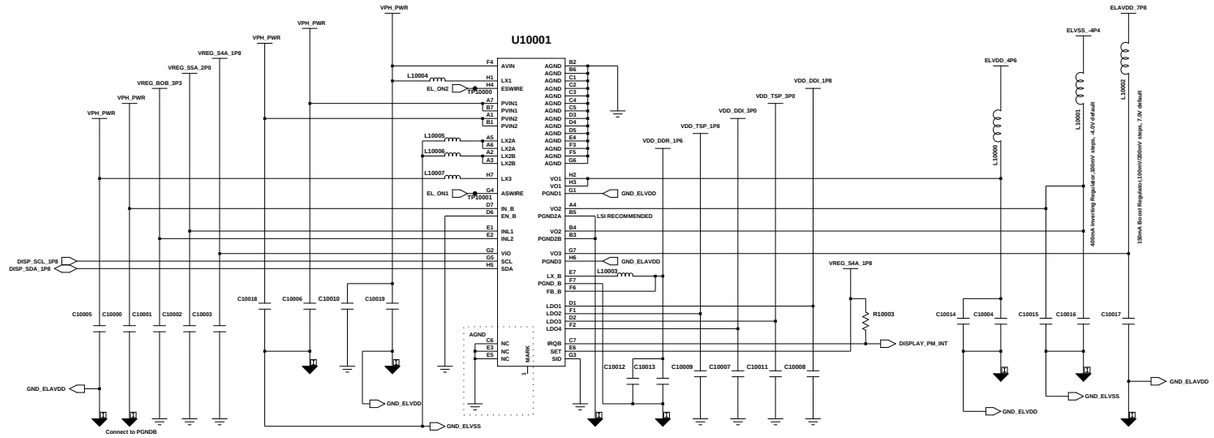

DISPLAY PMIC

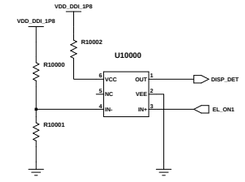

DISPLAY CONNECTOR

Engineer: SEC					
Drawn by: SEC					
R&D CHK:			TITLE:		Size:
DOC CTRL CHK:			SM8250 + SDX55M		
MFG ENGR CHK:					
Changed by:	Date Changed:	Time Changed:	QA CHK:	REV:	Drawing Number: Page: 10

SAMSUNG CONFIDENTIAL
THIS DOCUMENT CONTAINS CONFIDENTIAL
PROPRIETARY INFORMATION THAT IS
SAMSUNG ELECTRONICS CO'S PROPERTY.
DO NOT DISCLOSE TO OR DUPLICATE FOR OTHERS
EXCEPT AS AUTHORIZED BY SAMSUNG.

SDX55M

System

U11000-1

[1/3]

U11000-2

[2/3]

U11000-3

[3/3]

JTAG connector for CP

Engineer: SEC	SAMSUNG ELECTRONICS		
Drawn by: SEC			
R&D CHK:	TITLE: SM8250 + SDX55M		Size:
DOC CTRL CHK:			
MFG ENGR CHK:			
Changed by: cad	Date Changed: Thursday, December 1, 2016	Time Changed: 3:17:21 pm	QA CHK:
REV:	Drawing Number:		Page: 12

SAMSUNG CONFIDENTIAL
THIS DOCUMENT CONTAINS CONFIDENTIAL PROPRIETARY INFORMATION THAT IS SAMSUNG ELECTRONICS CO'S PROPERTY. DO NOT DISCLOSE TO OR DUPLICATE FOR OTHERS EXCEPT AS AUTHORIZED BY SAMSUNG.

CP PMIC

Power

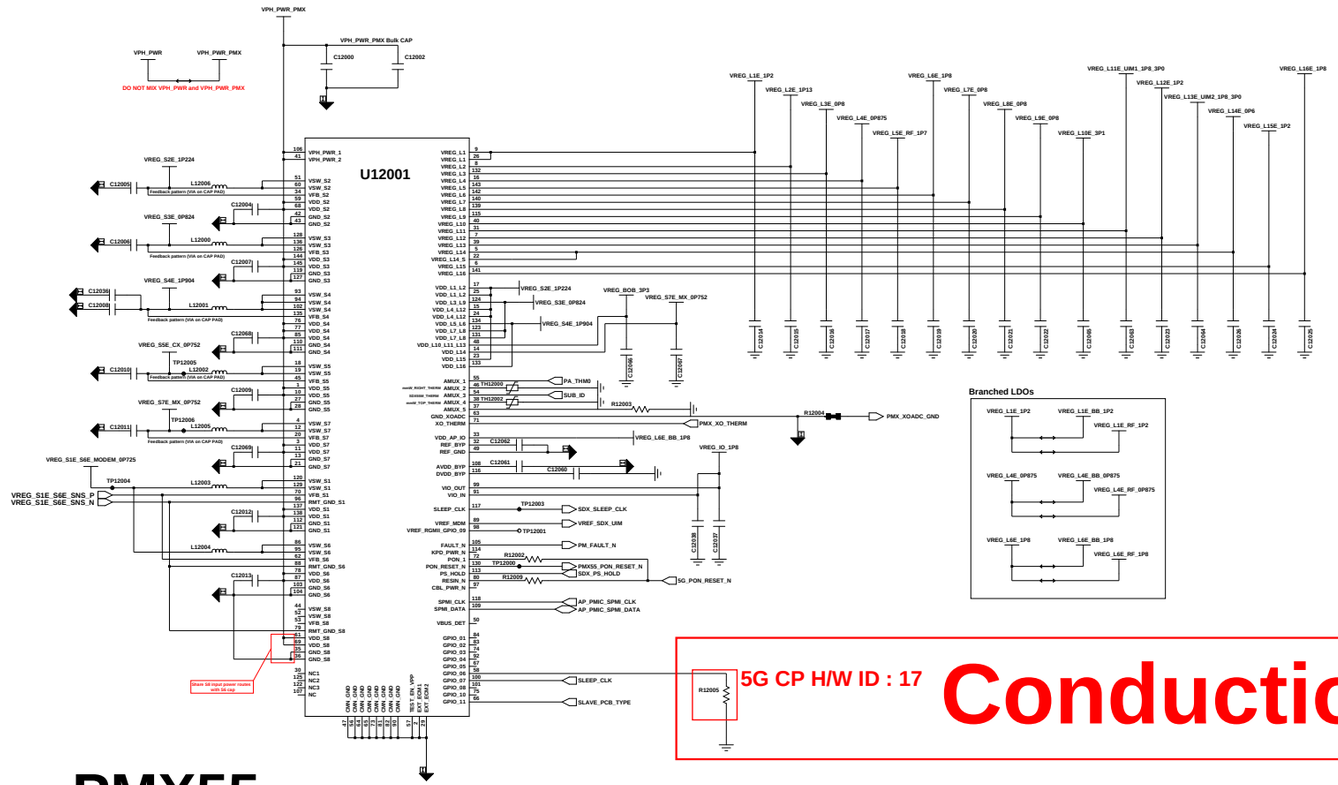

CP H/W ID table (PMX55 GPIO_06)

HW ID	BOARD REVISION	Value	Mech
00	SM8250+SDX55M Rev0.0	6.04K	
01		9.1K	
02	P2_REV0.0	12.4K	KI10
03	P2_REV0.0A	18K	KI10
04	P2_REV0.1	22K	KI20
05	P2_REV0.1(AP/CP V2.0 / TRCV V3.0)	30K	
06	SM-G986U_REV0.0(AP V1.0)	39K	KI30
07	SM-G986U_REV0.0(AP V1.0)	47K	KI30
08	SM-G986U_REV0.1	56K	KI40
09	SM-G986U_REV0.1 (QPM6585 NC)	68K	KI40
10	SM-G986U_REV0.1 (QPM6585,8972 NC)	82K	KI40
11	SM-G986U_REV0.2	100K	KI50
12	SM-G986U_REV0.3	120K	VY60
13	SM-G986U_REV0.3A	150K	VY60
14	SM-G986U_REV0.4	180K	VY70
15	SM-G986U_REV0.4 (QAT5515)	200K	VY70
16	SM-G986U_REV0.5	240K	VY75
17	SM-G986U_REV0.5A	280K	VY75
18		330K	
19		430K	
20		560K	
21		750K	
22		1000K	
23		1500K	
24		3000K	

Conduction

5G IFIC

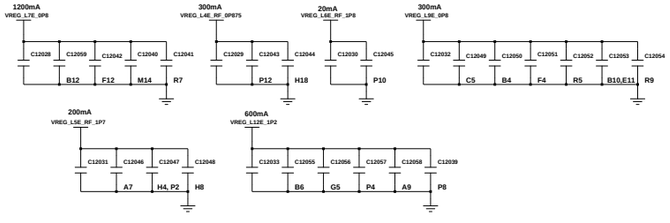

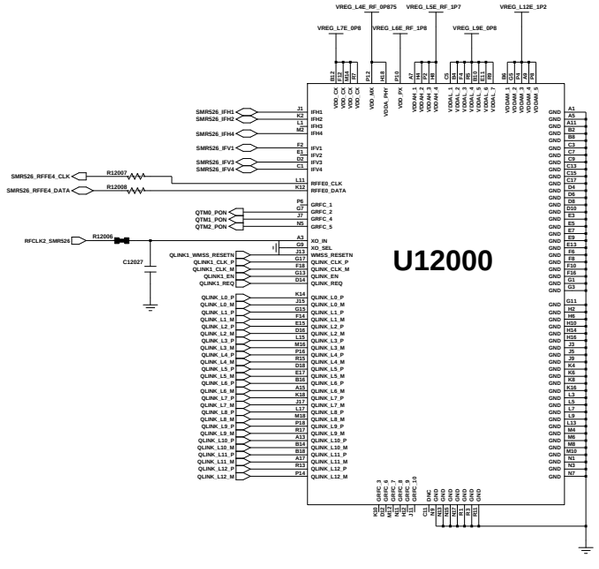

Radiation

mmW_ANT_CONN (Left)

mmW_ANT_CONN (Right)

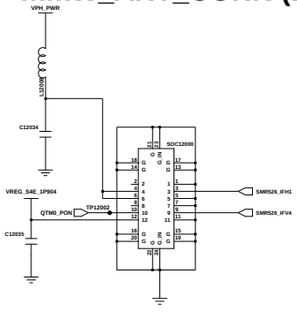

mmW_ANT_CONN (Up)

Engineer: SEC		SAMSUNG ELECTRONICS	
Drawn by: SEC			
R&D CHK:		TITLE:	Size:
DOC CTRL CHK:		SM8250 + SDX55M	
MFG ENGR CHK:			
Changed by: cad	Date Changed: Thursday, December 1, 2016	Time Changed: 3:17:21 pm	QA CHK:
REV:	Drawing Number:	Page: 13	

SAMSUNG CONFIDENTIAL
THIS DOCUMENT CONTAINS CONFIDENTIAL
PROPRIETARY INFORMATION THAT IS
SAMSUNG ELECTRONICS CO'S PROPERTY.
DO NOT DISCLOSE TO OR DUPLICATE FOR OTHERS
EXCEPT AS AUTHORIZED BY SAMSUNG.

INTERPOSER

Design

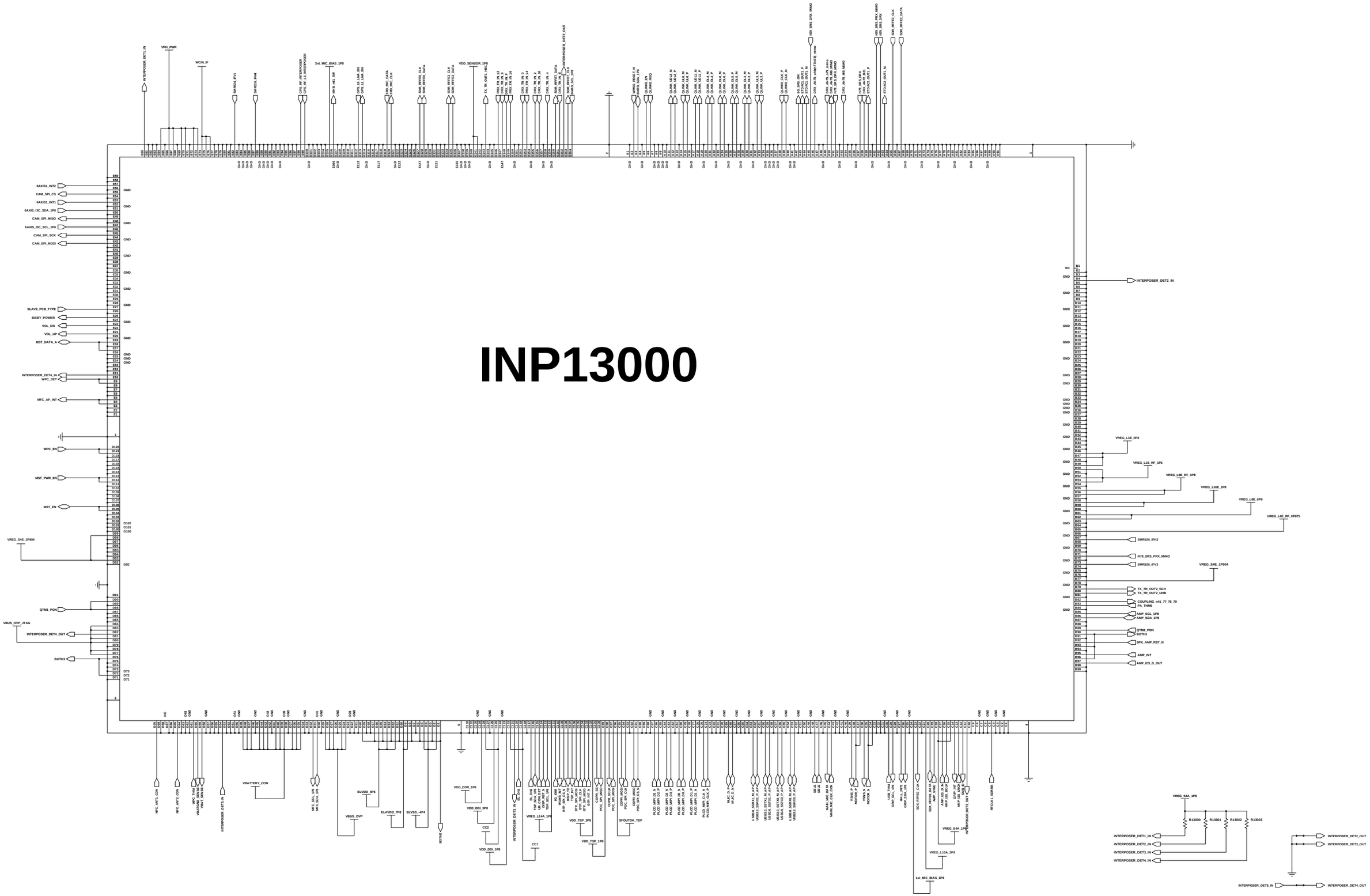

Engineer: SEC	SAMSUNG ELECTRONICS		
Drawn by: SEC			
R&D CHK:	TITLE:		Size:
DOC CTRL CHK:	SM8250 + SDX55M		
MFG ENGR CHK:			
QA CHK:	REV:	Drawing Number:	Page: 14

Changed by:	Date Changed:	Time Changed:
cad	Thursday, December 1, 2016	3:17:21 pm

SAMSUNG CONFIDENTIAL
THIS DOCUMENT CONTAINS CONFIDENTIAL PROPRIETARY INFORMATION THAT IS SAMSUNG ELECTRONICS CO'S PROPERTY. DO NOT DISCLOSE TO OR DUPLICATE FOR OTHERS EXCEPT AS AUTHORIZED BY SAMSUNG.

HUBBLE 2 NA SLAVE REV0.5A

SM-G986U Common

2019. 11.27

made 1203 , SMD 1209

sheet01 : RF (1/2), MMW Conn

sheet02 : RF (2/2), TRCV_SDR865

sheet03 : BT/WIFI, SIM, SHILDCAN

sheet04 : MFC, MFC Conn, 6XIS, BATT Conn, SPK AMP

sheet05 : Lower SUB Conn, KEYLESS, DISPLAY Con

sheet06 : INTERPOSER

Engineer:	
Drawn by:	
RLD CHK:	TITLE: Size:
DOC CTRL CHK:	
MFG ENGR CHK:	
QA CHK:	REV: Drawing Number: Page:

Changed by: | Date Changed: | Time Changed:

SAMSUNG CONFIDENTIAL
THIS DOCUMENT CONTAINS CONFIDENTIAL INFORMATION AND PROPERTY OF SAMSUNG ELECTRONICS CO., LTD. IT IS PROPRIETARY. DO NOT DISCLOSE TO OR DUPLICATE FOR OTHERS EXCEPT AS AUTHORIZED BY SAMSUNG.

Conduction

SMD option

NA : C21112 , C21121 : 100pF , F21005 OPEN
CHN/JPN : C21112 , C21121 : OPEN , F21005 LFD213G75PAEF228
N79 NA not support , CHN/JPN support

NA DELETE

NA : C21120 , L21092 : OPEN
CHN/JPN : C21120 , L21092 : matching value

NA/CHN :DPX252690DT-5187B1K Diplexer
JPN : LFD2H829MMZAE751 Triplexer

Check SMD Option

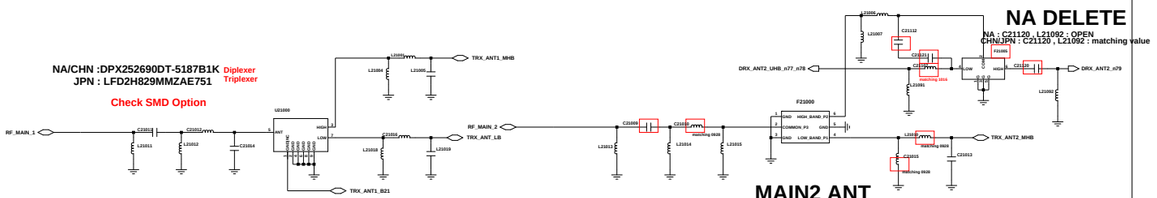

MAIN1 ANT
(LB,MB,JPN B21)

MAIN2 ANT
(HB,DRX_UHB_n77_n78 , n79)

MAIN3 ANT
(PRX hb MIMO , PRX uhb/n77/n78 mimo)

MAIN4 ANT
(PRX mb MIMO)

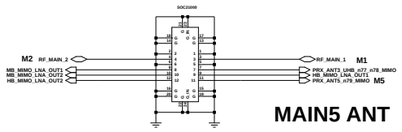

MAIN5 ANT
(PRX n79_mimo)

FRC connector

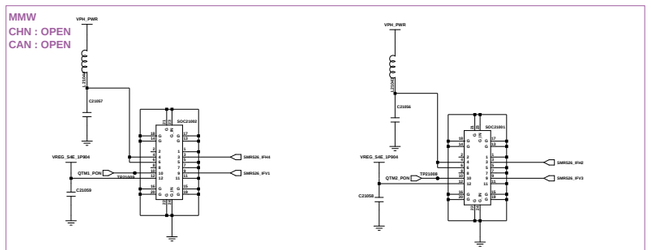

mmW_ANT_CONN (Left)

mmW_ANT_CONN (Right)

SMD option (B21)

NA / CHN no support
JPN support

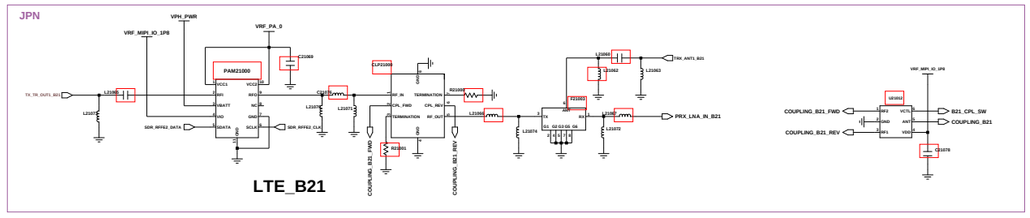

SAMSUNG CONFIDENTIAL
THIS DOCUMENT CONTAINS CONFIDENTIAL
PROPRIETARY INFORMATION THAT IS
SAMSUNG ELECTRONICS CO'S PROPERTY.
DO NOT DISCLOSE TO OR DUPLICATE FOR OTHERS
EXCEPT AS AUTHORIZED BY SAMSUNG.

TRANSCEIVER(SDR865) Conduction

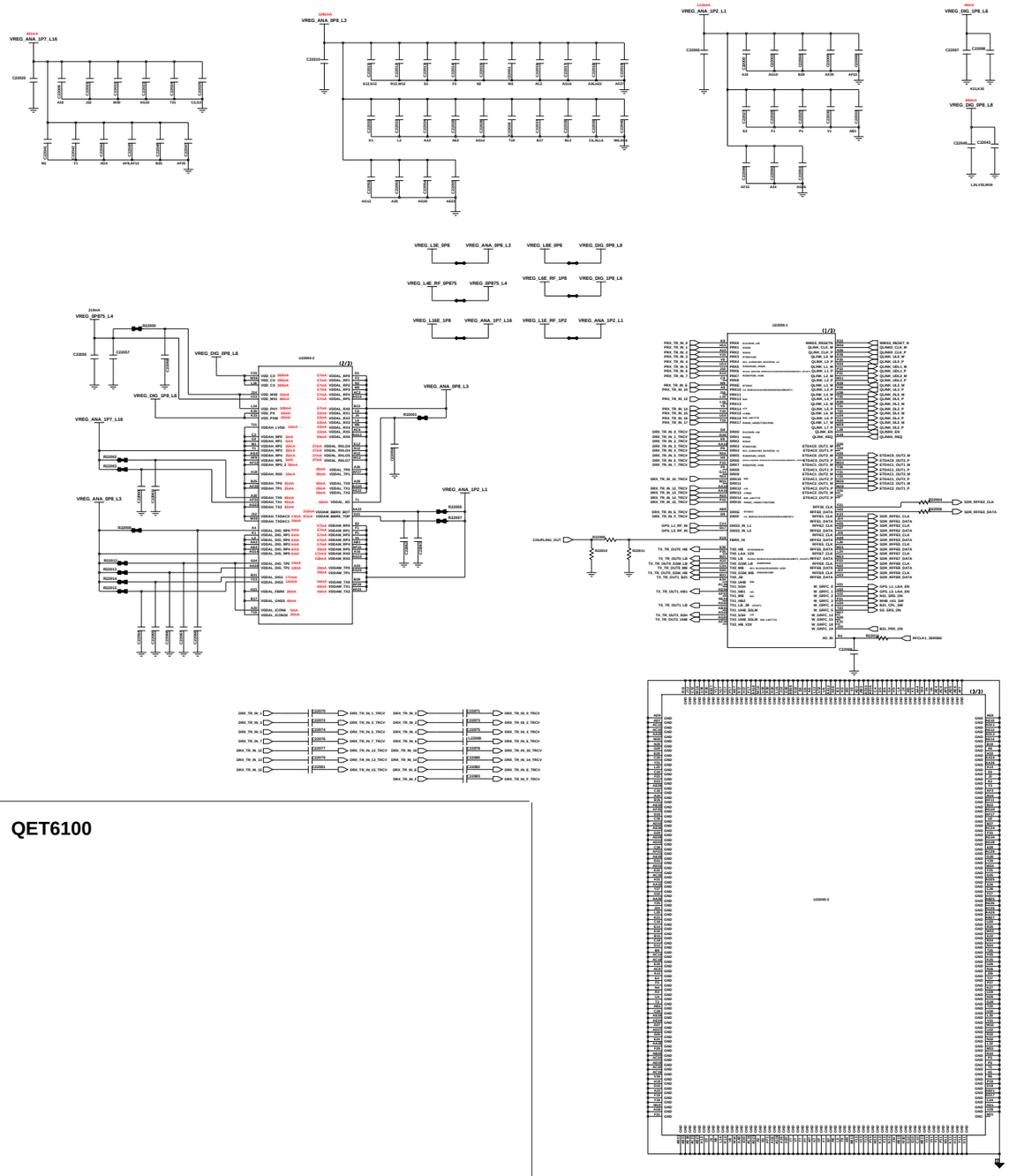

QET6100

DRX_ANT Radiation

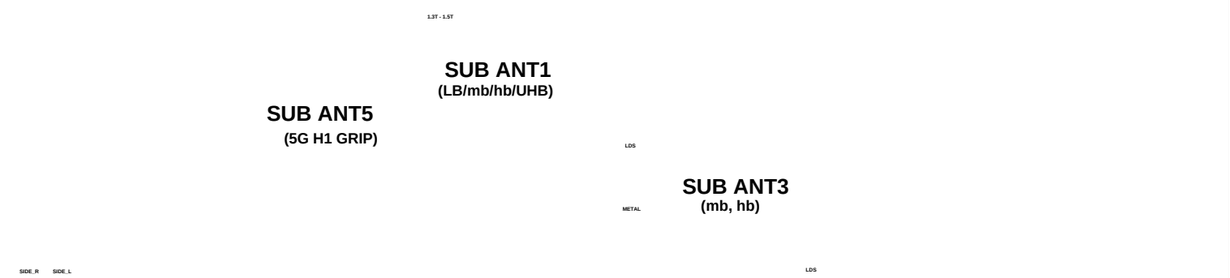

DRX_LB
(B5/8/12/13/14/17/18/19/20/26/28/29/71_BC0/10_G850/900)

Conduction

DRX_MHB_1
(B1/2/3/4/7/25/30/39/41/66_BC1_DCS/PCS)

DRX_MHB_2
(B2/4/7/25/30/41/66)

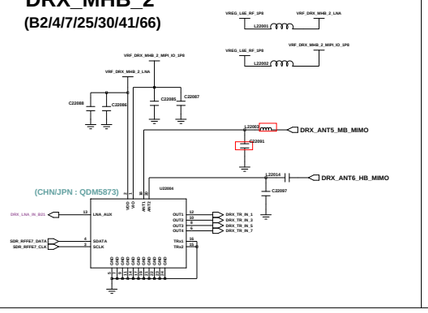

UHB
(n79)

N79 NA not support , CHN/JPN support
N79 SRS NA/JPN not support , CHN support

JPN : C22107 100pF , U22006 OPEN
CHN : C22107 OPEN , U22006 BGS12P2L6

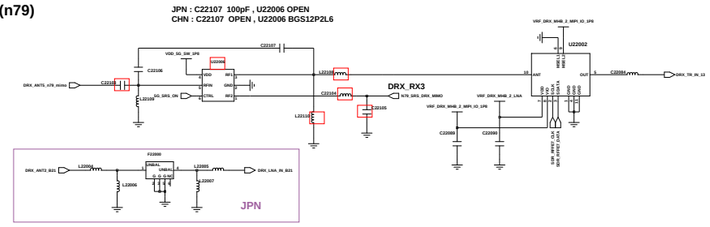

GPS_L1 Connectivity

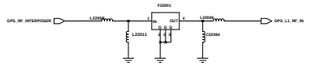

GPS_L5

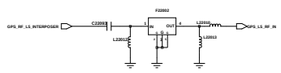

UHB
(B48, n77/78)

N78 SRS NA/JPN not support , CHN support

NA/ JPN : C22100 100pF , U22001 OPEN
CHN : C2100 OPEN , U22001 BGS12P2L6

SRS - 1T4R
(n77/78)

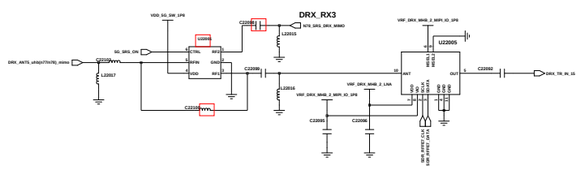

SM8250 + SDX55M

SAMSUNG CONFIDENTIAL
THIS DOCUMENT CONTAINS CONFIDENTIAL PROPRIETARY INFORMATION THAT IS SAMSUNG ELECTRONICS CO'S PROPERTY. DO NOT DISCLOSE TO OR DUPLICATE FOR OTHERS EXCEPT AS AUTHORIZED BY SAMSUNG.

Power

MFC

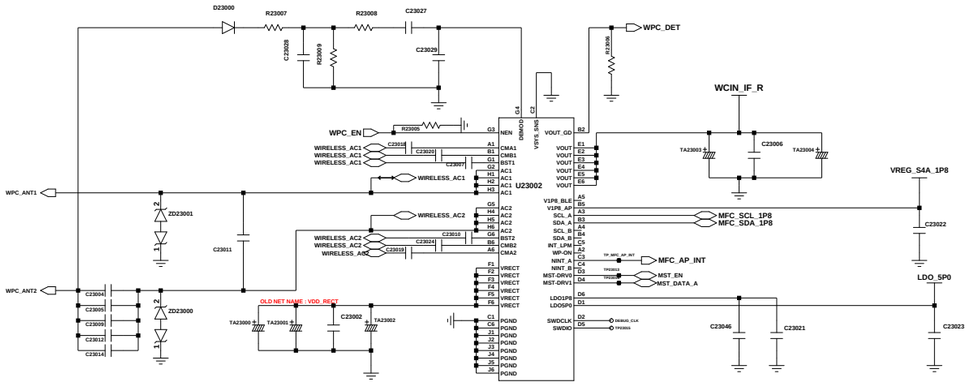

MST Switch

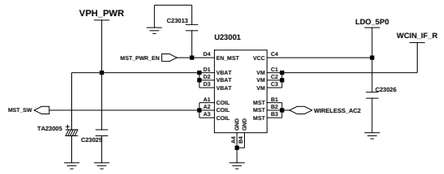

NFC

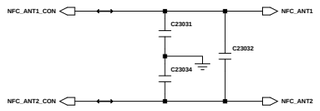

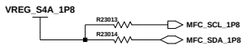

AUDIO

SPK AMP

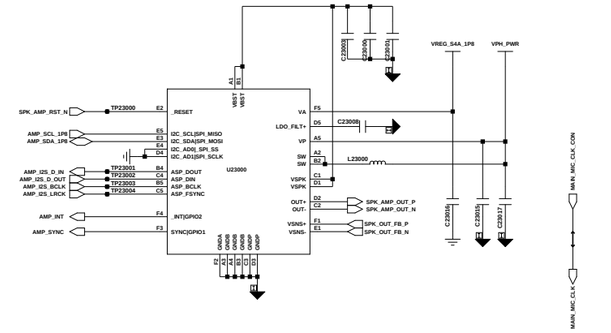

3rd MIC

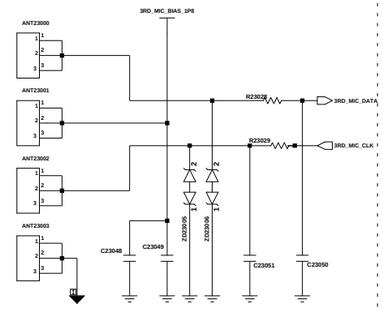

Visual

W/C CONNECTOR

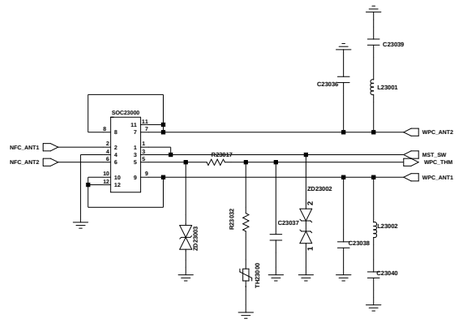

Battery Connector

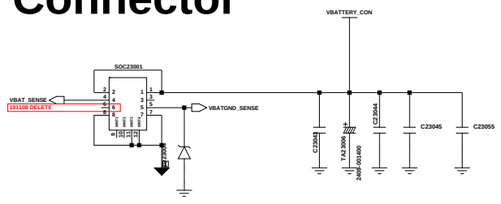

Power

SENSORS

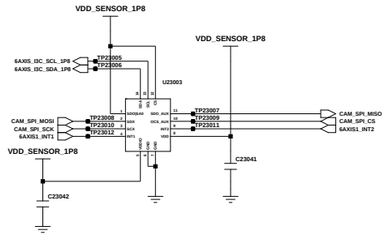

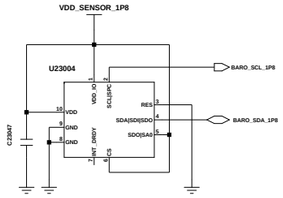

6 Axis SENSOR (GYRO,ACCEL)

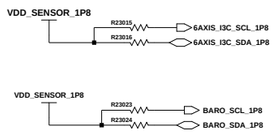

System

SLAVE_TYPE

	ADC
NA_Sub6_mmW(G986U)	68K
NA_CAN_Sub6(G986W)	100K
CHN_SUB6(G9860)	150K
LA_LTE	200K
KOR_Sub6(G956N)	270K
MEA_LTE	430K
JPN_mmW(G986D)	750K
JPN_LTE	1500K
For JIG	OPEN

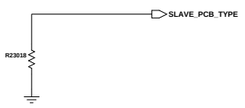

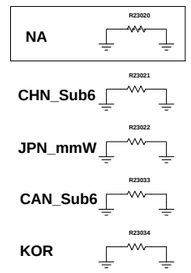

Engineer: SEC			
Drawn by: SEC			
R&D CHK:		TITLE: SM8250 + SDX55M	Size: 16 1 12 A
DOC CTRL CHK:			
MFG ENGR CHK:			
Changed by: user35	Date Changed: Friday, April 11, 2014	Time Changed: 11:27:55 pm	QA CHK:
REV	Drawing Number:		Page: 4

SAMSUNG CONFIDENTIAL
THIS DOCUMENT CONTAINS CONFIDENTIAL
PROPRIETARY INFORMATION THAT IS
SAMSUNG ELECTRONICS CO'S PROPERTY.
DO NOT DISCLOSE TO OR DUPLICATE FOR OTHERS
EXCEPT AS AUTHORIZED BY SAMSUNG.

System

Lower SUB Conn

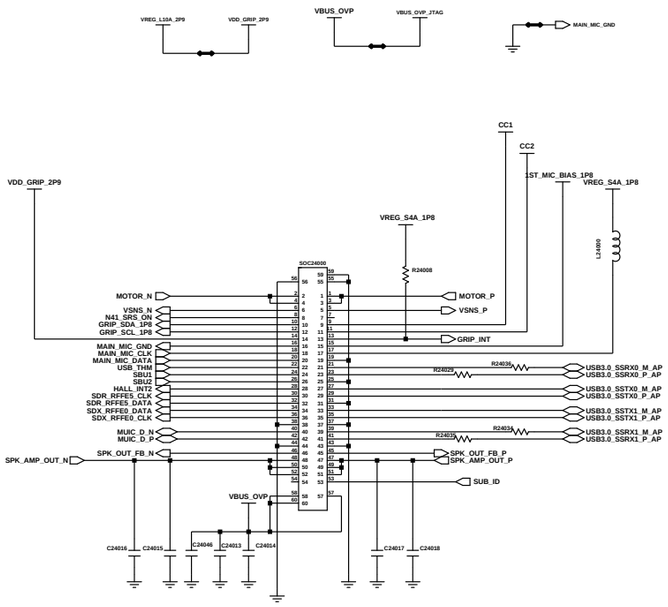

Vol key

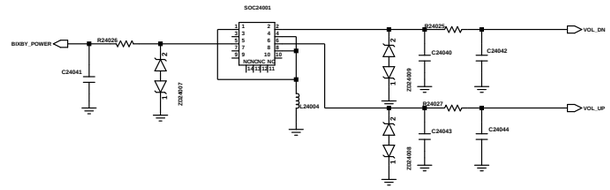

Visual

DISPLAY

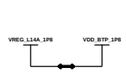

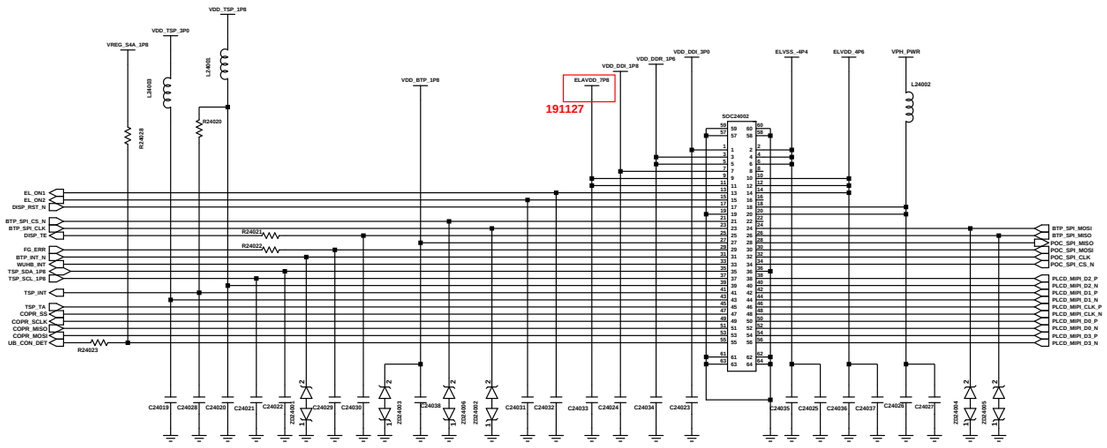

DISPLAY CONNECTOR

Design

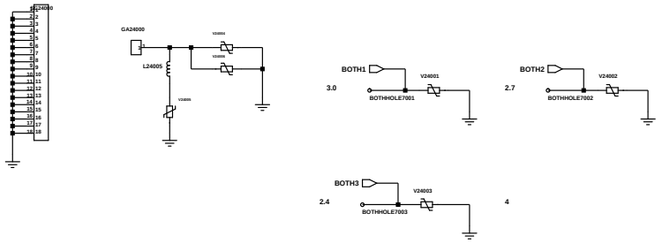

SHIELD CAN

BOSS HOLE

2D BACODE

Engineer: SEC		SAMSUNG ELECTRONICS	
Drawn by: SEC			
R&D CHK:		TITLE:	Size:
DOC CTRL CHK:		SM8250 + SDX55M	
MFG ENGR CHK:			
Changed by: cad	Date Changed: Thursday, December 1, 2016	Time Changed: 3:17:21 pm	QA CHK:
REV:	Drawing Number:	Page: 11	

SAMSUNG CONFIDENTIAL
THIS DOCUMENT CONTAINS CONFIDENTIAL PROPRIETARY INFORMATION THAT IS SAMSUNG ELECTRONICS CO'S PROPERTY. DO NOT DISCLOSE TO OR DUPLICATE FOR OTHERS EXCEPT AS AUTHORIZED BY SAMSUNG.

INTERPOSER

Design

INP25000

INTERPOSER_DET1_IN
VPH_PWR
WCIN_IF
SMRS26_IFV1
SMRS26_IFH1
191127
GPS_RF_INTERPOSER
GPS_IF_L1_INTERPOSER
3rd_MIC_BIAS_1P8
MAIN_I2C_SW
GPS_L1_LNA_EN
GPS_L1_LNA
HMD_MIC_DATA
HMD_MIC_CLK
SDR_RFFE0_CLK
SDR_RFFE0_DATA
SDR_RFFE1_CLK
SDR_RFFE1_DATA
VDD_SENSOR_1P8
TX_TR_OUT1_HB
PRX_TR_IN_D
PRX_TR_IN_E
PRX_TR_IN_F
PRX_TR_HPI_IN
DRX_TR_IN_0
DRX_TR_IN_1
DRX_TR_IN_2
DRX_TR_IN_3
DRX_TR_IN_4
SDR_RFFE2_DATA
SDR_RFFE2_CLK
INTERPOSER4_DET2_OUT
QUNIO_RFFE2_CLK
QUNIO_RFFE2_DATA
QUNIO_RFFE3_CLK
QUNIO_RFFE3_DATA
QUNIO_SCL_1P8
QUNIO_RFFE3_TX
QUNIO_RFFE3_RX
QUNIO_EN
QUNIO_RFFE_REQ
QUNK_UD1_M
QUNK_UD1_P
QUNK_UL3_M
QUNK_UL3_P
QUNK_UD1_M
QUNK_UD1_P
QUNK_DL4_M
QUNK_DL4_P
QUNK_DL5_P
QUNK_DL5_M
QUNK_DL3_P
QUNK_DL3_M
QUNK_UL1_M
QUNK_UL1_P
QUNK_CLK_P
QUNK_CLK_M
XO_SRS_ON
XO_SRS_OUT
ETDAC1_OUT1_M
SRX_ANT5_mhb(rf-1x2)_mmw
SRX_DRX_HMD
DRX_ANT8_HB_HMD
N78_SRS_PRX_HMD
DRX_ANT8_HB_MMD
N78_SRS_DRX
N78_SRS_PRX_MMD
N78_SRS_DRX
ETDAC2_OUT1_P
ETDAC2_OUT1_M
SDR_RFFE2_CLK
SDR_RFFE2_DATA
6AXIS1_INT2
CAM_SPI_CS
6AXIS1_INT1
6AXIS_I3C_SDA_1P8
CAM_SPI_MISO
6AXIS_I3C_SCL_1P8
CAM_SPI_SCK
CAM_SPI_MOSI
SLAVE_PCB_TYPE
BIXBY_POWER
VOL_DN
VOL_UP
MST_DATA_A
INTERPOSER_DET4_IN
WPC_DET
MFC_AP_INT
WPC_EN
MST_PWR_EN
MST_EN
VREG_S4E_1P904
QTM1_PON
VBUS_OVP_JTAG
INTERPOSER_DET4_OUT
BOTH2
INTERPOSER_DET2_IN
VREG_L3E_0P8
VREG_L1E_RF_1P2
VREG_L6E_RF_1P8
VREG_L16E_1P8
VREG_L8E_0P8
VREG_L4E_RF_0P875
SMRS26_IFH2
N78_SRS_PRX_MIMO
SMRS26_IFV3
VREG_S4E_1P904
TX_TR_OUT2_SGH
TX_TR_OUT2_UHB
COUPLING_#41_77_78_79
PA_THM0
AMP_SCL_1P8
AMP_SDA_1P8
QTM1_PON
BOTH1
SPK_AMP_RST_N
AMP_INT
AMP_I2S_D_OUT
MFC_ANT1_CON
MFC_ANT2_CON
WPC_THM
WRX/WPC_SDA
WRX/WPC_SCL
WPC_SENSE
VBATTERY_CON
MFC_SCL_1P8
MFC_SDA_1P8
ELVDD_4P6
VBUS_OVP
ELAVDD_7P8
ELVSS_-4P4
VDD_DDI_1P6
VDD_DDI_3P0
CC2
VDD_DDI_1P8
INTERPOSER_DET3_IN
SC_SDA
SC_SCL
TSP_SCL_1P8
TSP_SDA_1P8
VREG_L14A_1P8
VDD_TSP_3P0
VDD_TSP_1P8
CC1
FG_EN
WIRELESS_INT
BTP_SPI_CS
BTP_SPI_MISO
BTP_SPI_CLK
BTP_SPI_MOSI
BTP_INT_N
CORE_I3C_SCL
POC_SPI_MISO
POC_SPI_MOSI
POC_SPI_CLK
CORE_I3C_SDA
POC_SPI_CS
PLCD_MIPI_D2_P
PLCD_MIPI_D2_N
PLCD_MIPI_D3_P
PLCD_MIPI_D3_N
PLCD_MIPI_D0_P
PLCD_MIPI_D0_N
PLCD_MIPI_D1_P
PLCD_MIPI_D1_N
PLCD_MIPI_CLK_P
PLCD_MIPI_CLK_N
MUIC_D_P
MUIC_D_N
USB3.0_SSRX_M_AP
USB3.0_SSRX_P_AP
USB3.0_SSTX_M_AP
USB3.0_SSTX_P_AP
USB3.0_SSTX_P_AP
USB3.0_SSTX_M_AP
USB3.0_SSRX_M_AP
USB3.0_SSRX_P_AP
SBU1
SBU2
HRM_I3C_SCL
HRM_I3C_SDA
MAIN_MIC_CON
VSNS_P
MOTOR_P
VSNS_N
MOTOR_N
USB_THM
GRIP_SCL_1P8
HALL_INT2
GRIP_SDA_1P8
SDX_RFFE0_DATA
SDX_RFFE0_CLK
SPK_AMP_I2S_BCK
AMP_I2S_WS
AMP_SYNC
AMP_I2S_D_IN
AMP_I2S_D_OUT
GRIP_INT
AMP_I3S_LRCK
AMP_I3S_BCK
INTERPOSER_DET5_OUT
VREG_S4A_1P8
VREG_L10A_2P9
1st_MIC_BIAS_1P8
RFCLK1_32M/4/6
INTERPOSER_DET2_IN
INTERPOSER_DET2_OUT
INTERPOSER_DET3_IN
INTERPOSER_DET3_OUT
INTERPOSER_DET4_IN
INTERPOSER_DET4_OUT
INTERPOSER_DET1_IN
INTERPOSER_DET5_IN

Changed by: cad	Date Changed: Thursday, December 1, 2016	Time Changed: 3:17:21 pm	QA CHK:	REV:	Drawing Number:	Page: 14

Engineer: SEC	SAMSUNG ELECTRONICS
Drawn by: SEC	
R&D CHK:	TITLE: SM8250 + SDX55M
DOC CTRL CHK:	Size:
MFG ENGR CHK:	

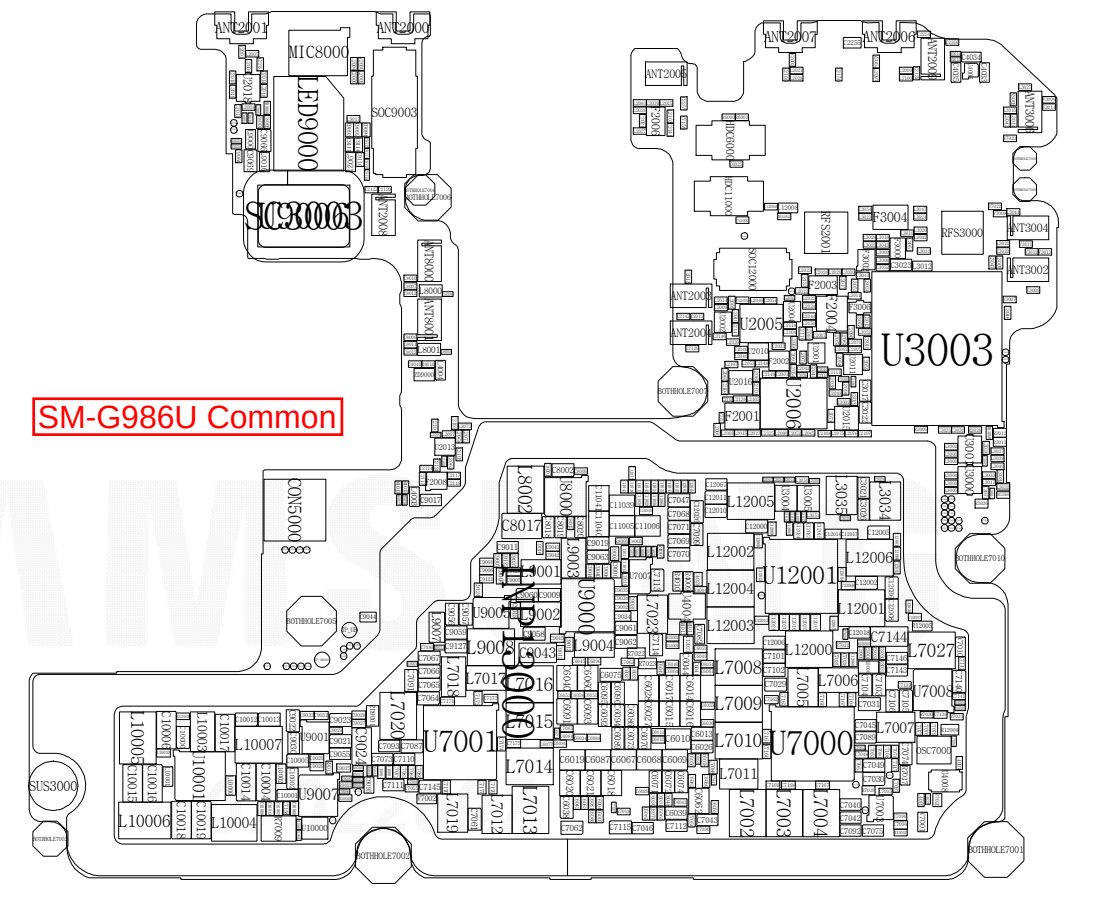
SM-G986U Common
ANT2001
ANT2000
MIC8000
LED9000
SOC9003
SC3003
ANT2007
ANT2006
ANT2005
ANT3000
DC6000
DC1100
RFS2001
F3004
RFS3000
ANT3004
ANT3002
SOC2000
F2003
F2004
ANT2003
ANT2004
U2005
U3003
U2006
F2001
CON5000
U12001
U7000
U7001
U9003
U9000
U9002
U9004
U9007
L10006
L10004
L10007
L10005
L10001
L10003
L10002
L7014
L7015
L7016
L7017
L7018
L7019
L7012
L7013
L7020
L7002
L7003
L7004
L7005
L7006
L7007
L7008
L7009
L7010
L7011
L7027
L8000
L8001
L8002
L9001
L9002
L9003
L9004
C8017
C8043
C7144
U7008
DSC7000
SUS3000
BOTHOLE7002
BOTHOLE7001
BOTHOLE7005
BOTHOLE7006
BOTHOLE7007
BOTHOLE7010

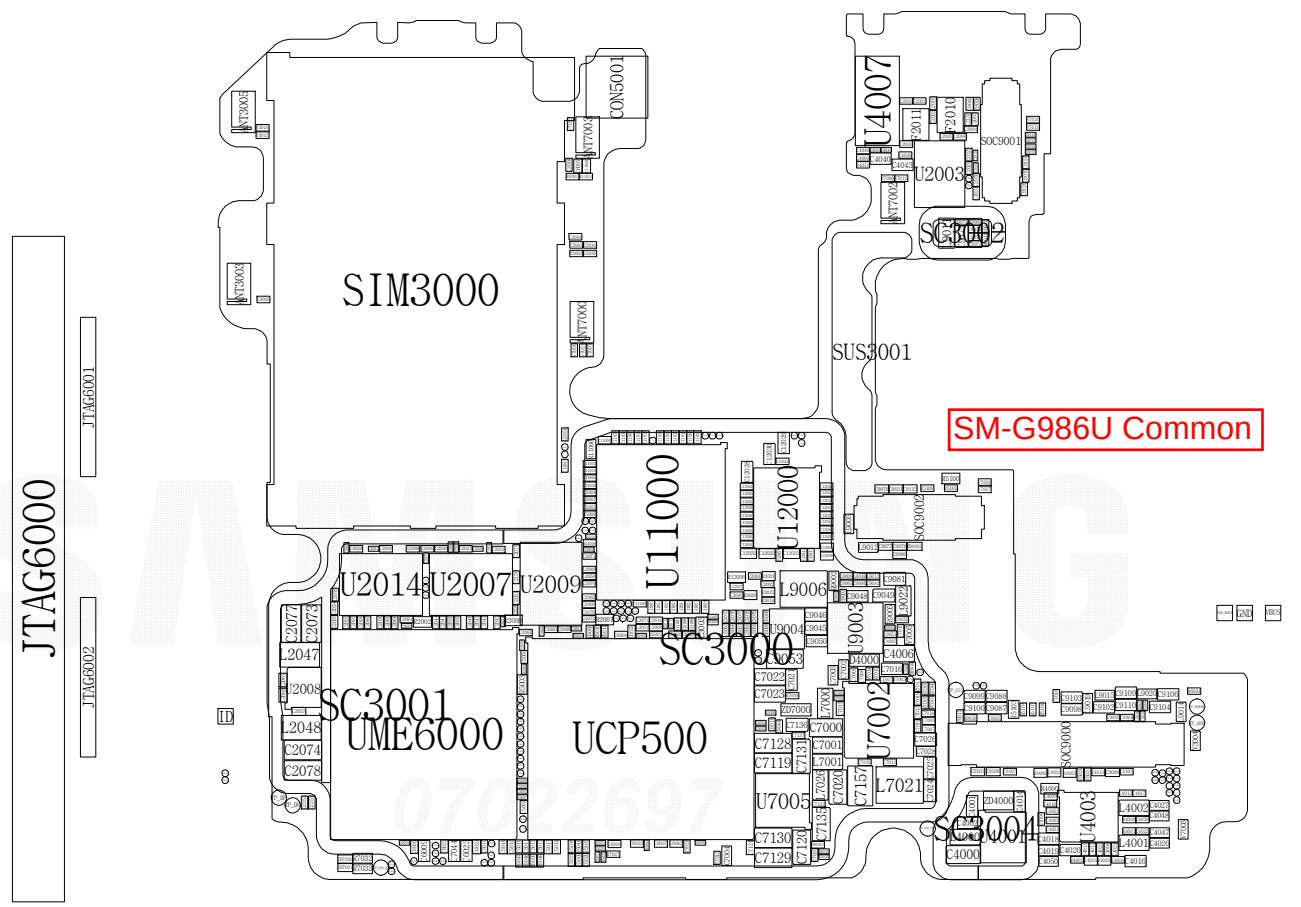
SM-G986U Common
JTAG6000
JTAG6001
JTAG6002
SIM3000
CON5001
NT3005
NT3003
NT7003
NT7000
U4007
F2011
F2010
SOC9001
U2003
NT7002
SUS3001
SOC9002
U11000
U12000
U2014
U2007
U2009
L9006
U9004
U9003
SC3000
SC3001
UME6000
UCP500
U7002
U7005
L7021
C7157
SOC9000
U4003
L4002
L4001
C4000
C2077
C2073
L2047
U2008
L2048
C2074
C2078
C7022
C7023
C7128
C7119
C7130
C7129
C7000
C7001
L7001
C4006
D4000
ZD4000
GND
ID

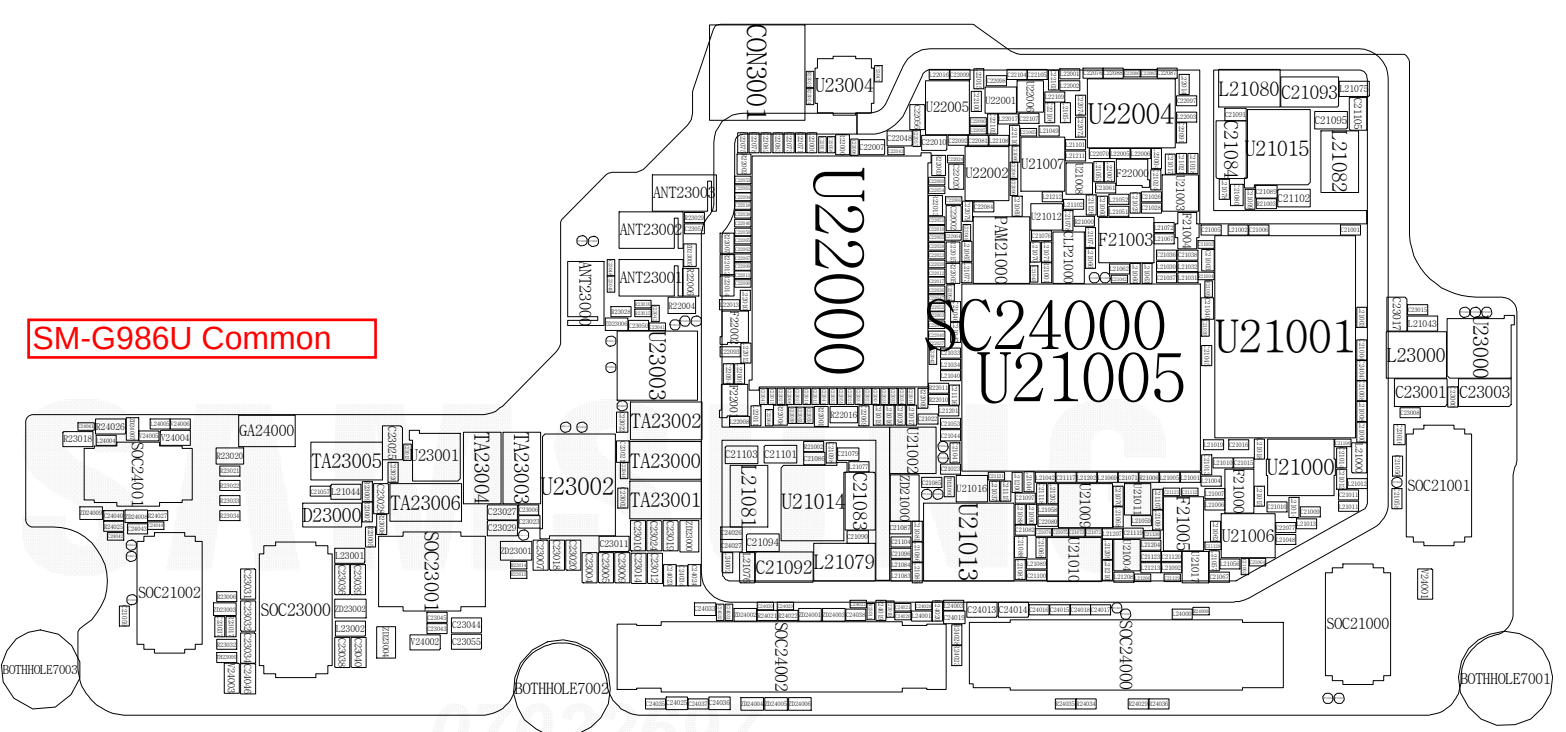
SM-G986U Common
CON3001
U23004
U22004
U22000
SC24000
U21005
U21001
L21080
C21093
C21084
U21015
C21082
C21102
U21007
F22000
F21003
PAM21000
L21000
U21012
ANT23003
ANT23002
ANT23001
ANT23000
U23003
TA23002
TA23000
TA23001
U23002
TA23004
TA23003
TA23005
U23001
TA23006
D23000
GA24000
SOC24001
SOC21002
SOC23000
SOC23001
U21014
C21081
C21083
C21092
L21079
U21013
U21000
U21006
L23000
C23001
C23003
SOC21001
SOC21000
SOC24002
SOC24000
BOTHHOLE7003
BOTHHOLE7002
BOTHHOLE7001

SAMSUNG CONFIDENTIAL
THIS DOCUMENT CONTAINS CONFIDENTIAL PROPRIETARY INFORMATION THAT IS SAMSUNG ELECTRONICS CO'S PROPERTY. DO NOT DISCLOSE TO OR DUPLICATE FOR OTHERS EXCEPT AS AUTHORIZED BY SAMSUNG.

SM-G986W MASTER REV0.5A

2019. 11. 28

1216 OPEN -> NC
0213 R12005 Change

sheet01 : RF (1/2)
sheet02 : RF (2/2)
sheet03 : BT/WIFI, SIM, SHILDCAN
sheet04 : NFC, MFC, OVP LS, SENSORS
sheet05 : AP_SM8250
sheet06 : AP_SM8250 POWER/GND, JTAG, UFS
sheet07 : PM8250, IF PMIC(CC IC), D/C
sheet08 : AUDIO
sheet09 : CAMERA
sheet10 : DISPLAY
sheet11 : CP_SDX55M
sheet12 : CP PMIC, 5G IFIC, 5G Conn
sheet13 : INTERPOSER

Engineer:
Drawn by:
R&D CHK:
DOC CTRL CHK:
SPG ENGR CHK:
QA CHK:
TITLE:
Size:
Changed by:
Date Changed:
Time Changed:
REV:
Drawing Number:
Page:

SAMSUNG CONFIDENTIAL
THIS DOCUMENT CONTAINS CONFIDENTIAL
AND PROPRIETARY INFORMATION OF
SAMSUNG ELECTRONICS CO. LTD. PROPERTY.
DO NOT DISCLOSE TO OR DUPLICATE FOR OTHERS
EXCEPT AS AUTHORIZED BY SAMSUNG.

MAIN ANT

MAIN1-1 ANT

MAIN1-2 ANT

MAIN4 ANT

MAIN2 ANT

M1-1

M4

M1-2
M2

M3

MAIN3 ANT

FRC connector

JPN

LTE_B21

2G_PA

THERMISTER

LB LPAMID
(B5/8/12/13/14/17/20/26/28/29/71, G850/900, BC0/10)

OMH LPAMID
(B1/2/3/4/7/25/30/34/38/39/40/41/66, G1800/1900, BC1)

UHB
(B48, n77/78/79)

ET Modulator(QET5100#0)

low thickness

ET Modulator(QET5100#1)

low thickness

Engineer:	SEC
Drawn by:	SEC
R&D CHK:	
DOC CTRL CHK:	
MFG ENGR CHK:	
QA CHK:	

TITLE: **SM8250 + SDX55M**

SIZE | Drawing Number:

Changed by:	Date Changed:	Time Changed:

SAMSUNG CONFIDENTIAL
THIS DOCUMENT CONTAINS CONFIDENTIAL INFORMATION AND PROPERTY OF SAMSUNG ELECTRONICS CO., LTD. (SEC). DO NOT DISCLOSE TO OR DUPLICATE FOR OTHERS EXCEPT AS AUTHORIZED BY SAMSUNG.

TRANSCEIVER(SDR865)

Conduction

QET6100

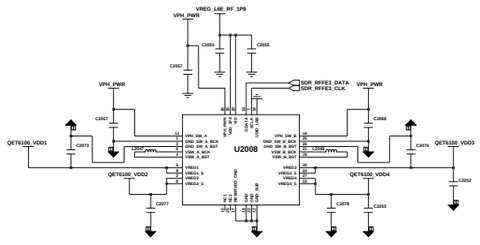

Connectivity

GPS_L1

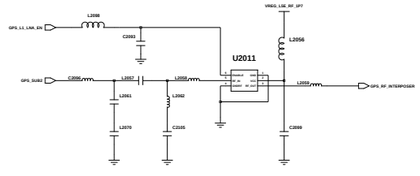

GPS_L5

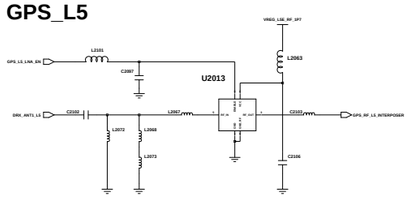

DRX_ANT

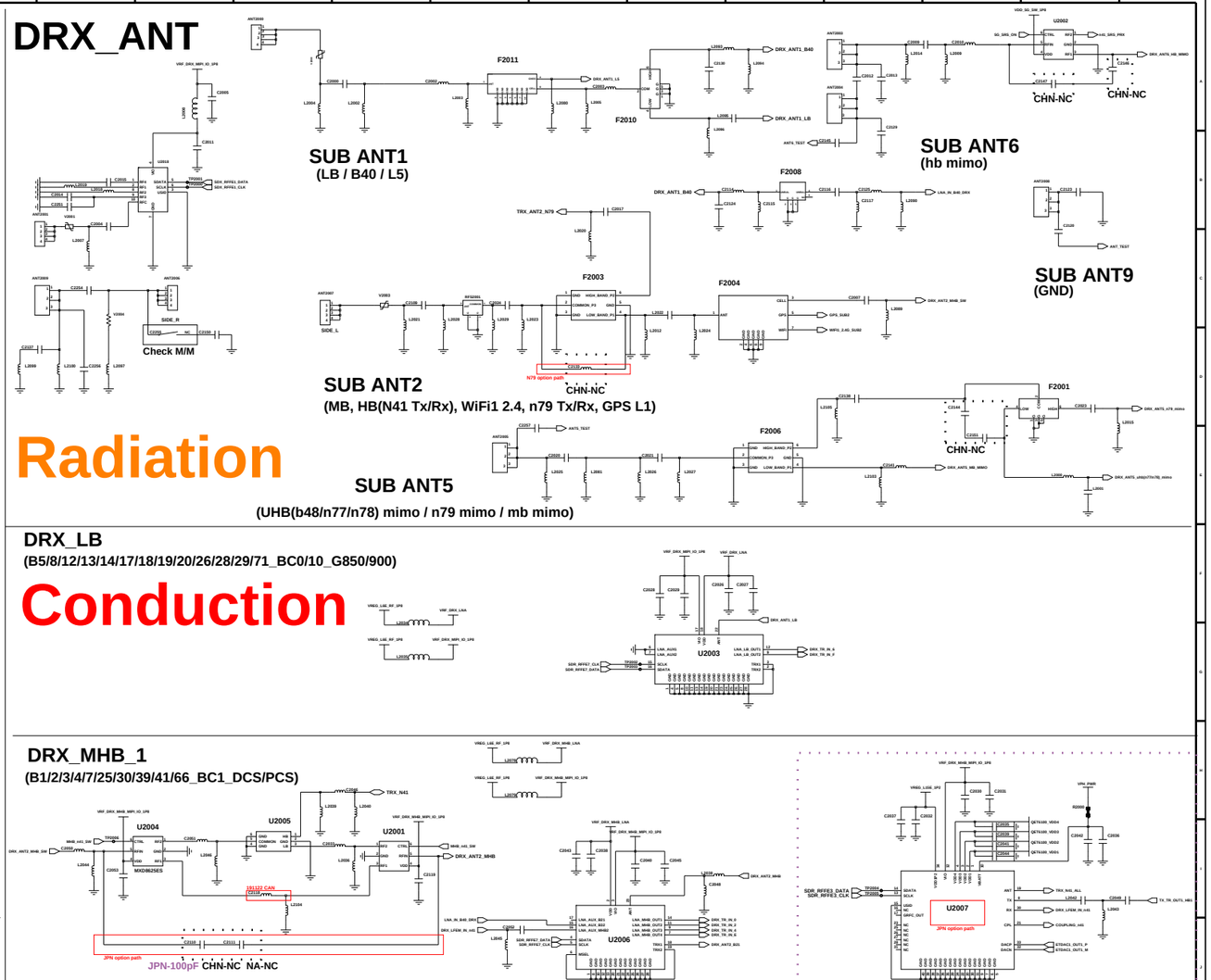

DRX_LB

(B5/8/12/13/14/17/18/19/20/26/28/29/71_BC0/10_G850/900)

Conduction

DRX_MHB_1

(B1/2/3/4/7/25/30/39/41/66_BC1_DCS/PCS)

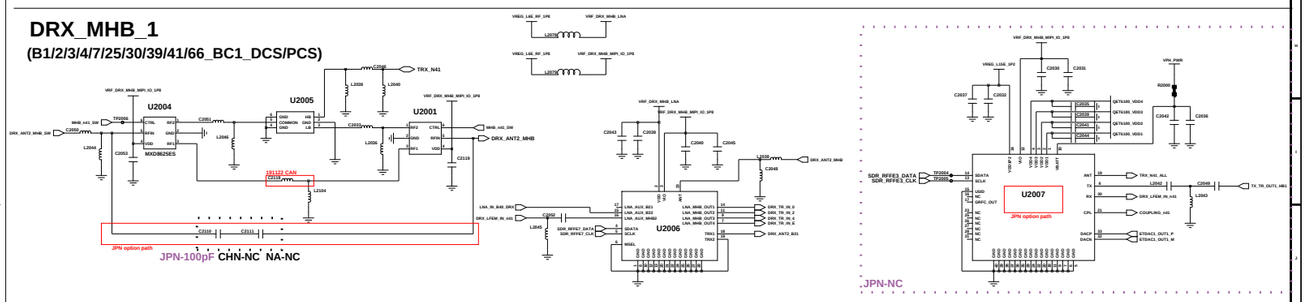

DRX_MHB_2

(B2/4/7/25/30/41/66)

UHB

(n79)

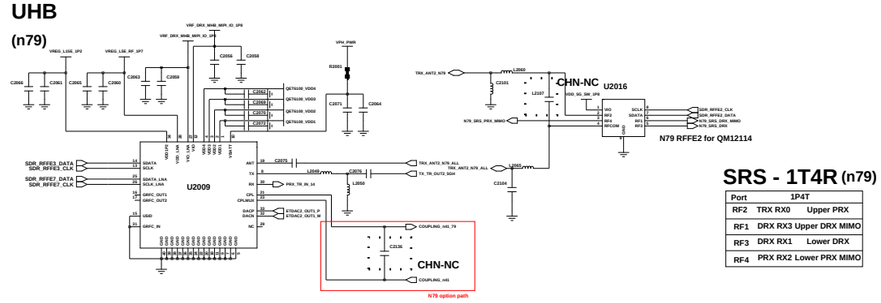

UHB

(B48, n77/78)

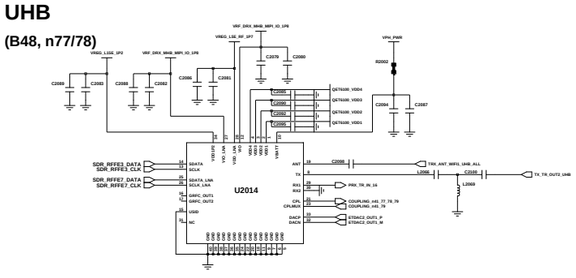

SRS - 1T2R (n41)

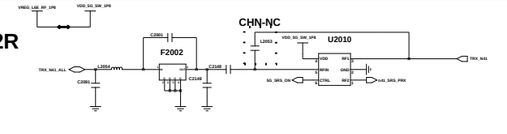

SRS - 1T4R (n78)

Port	1P4T	
RF2	TRX RX0	Upper PRX
RF1	DRX RX3	Upper DRX MIMO
RF3	DRX RX1	Lower DRX
RF4	PRX RX2	Lower PRX MIMO

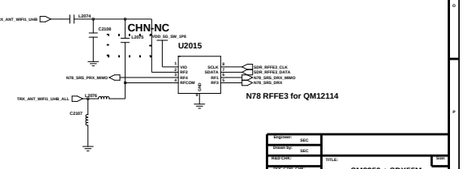

Designer:	SEC	
Checked by:	SEC	
Approved by:	SEC	
PCB Code:		TITLE: SM8250 + SDX55M
VDC & HW Code:		
BB & SWDM Code:		

Changed by	Date Changed	Time Changed	QA Code	Rev	Drawing Number

SAMSUNG CONFIDENTIAL
THIS DOCUMENT CONTAINS CONFIDENTIAL PROPRIETARY INFORMATION THAT IS SAMSUNG ELECTRONICS CO'S PROPERTY. DO NOT DISCLOSE TO OR DUPLICATE FOR OTHERS EXCEPT AS AUTHORIZED BY SAMSUNG.

Connectivity

BT/WIFI
(Broadcom module)

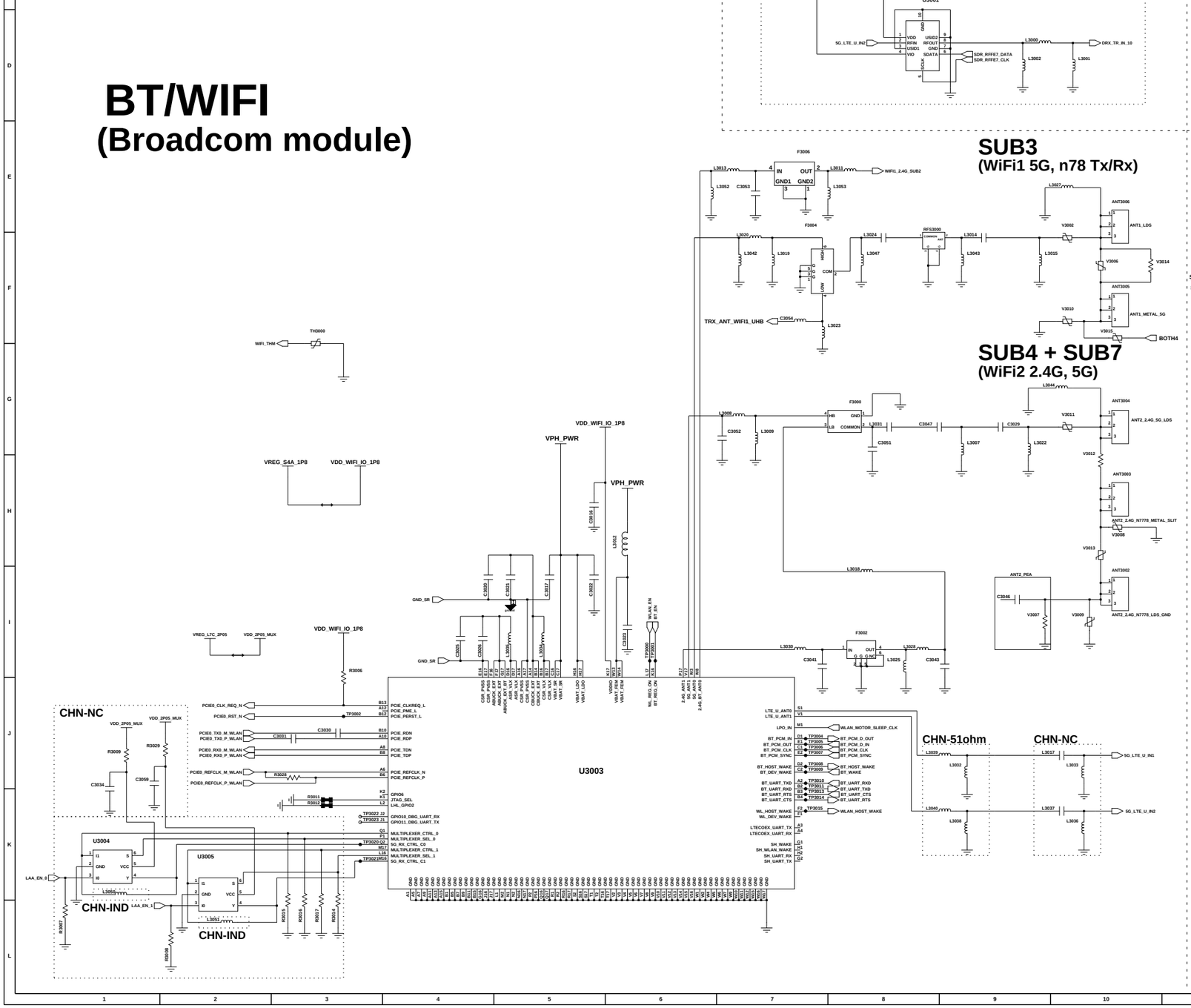
VDD_WIFI_IO_1P8
VPH_PWR
VREG_S4A_1P8
VDD_WIFI_IO_1P8
VPH_PWR
GND_SR
GND_SR
VREG_L7C_2P05
VDD_2P05_MUX
VDD_WIFI_IO_1P8
R3006
CHN-NC
VDD_2P05_MUX
R3009
R3029
C3034
C3059
PCIE0_CLK_REQ_N
PCIE0_RST_N
TP3002
PCIE_CLKREQ_L
PCIE_PME_L
PCIE_PERST_L
PCIE0_TX0_M_WLAN
PCIE0_TX0_P_WLAN
C3031
C3030
PCIE_RDN
PCIE_RDP
PCIE0_RX0_M_WLAN
PCIE0_RX0_P_WLAN
PCIE_TDN
PCIE_TDP
PCIE0_REFCLK_M_WLAN
PCIE0_REFCLK_P_WLAN
R3028
PCIE_REFCLK_N
PCIE_REFCLK_P
R3011
R3012
GPIO6
JTAG_SEL
LHL_GPIO2
TP3022_J2
TP3023_J1
GPIO10_DBG_UART_RX
GPIO11_DBG_UART_TX
U3004
U3005
Q1
P1
TP3020 Q0
M1
L0
TP3021M10
MULTIPLEXER_CTRL_0
MULTIPLEXER_SEL_0
5G_RX_CTRL_C0
MULTIPLEXER_CTRL_1
MULTIPLEXER_SEL_1
5G_RX_CTRL_C1
LAA_EN_0
L3050
CHN-IND
LAA_EN_1
L3051
CHN-IND
R3007
R3008
R3015
R3016
R3017
R3018
U3003
LTE_U_ANT0
LTE_U_ANT1
LPO_IN
WLAN_MOTOR_SLEEP_CLK
BT_PCM_IN
BT_PCM_OUT
BT_PCM_CLK
BT_PCM_SYNC
TP3004
TP3005
TP3006
TP3007
BT_PCM_D_OUT
BT_PCM_D_IN
BT_PCM_CLK
BT_PCM_SYNC
BT_HOST_WAKE
BT_DEV_WAKE
TP3008
TP3009
BT_HOST_WAKE
BT_WAKE
BT_UART_TXD
BT_UART_RXD
BT_UART_RTS
BT_UART_CTS
TP3010
TP3011
TP3012
TP3013
BT_UART_RXD
BT_UART_TXD
BT_UART_CTS
BT_UART_RTS
WL_HOST_WAKE
WL_DEV_WAKE
TP3015
TP3014
WLAN_HOST_WAKE
LTECOEX_UART_TX
LTECOEX_UART_RX
SH_WAKE
SH_WLAN_WAKE
SH_UART_RX
SH_UART_TX
CHN-51ohm
CHN-NC
L3035
L3032
L3040
L3038
L3017
L3033
L3037
L3036
SG_LTE_U_IN1
SG_LTE_U_IN2
WLAN_EN
BT_EN
VDD_WIFI_IO_1P8
VPH_PWR
VPH_PWR
C3016
L3012
C3003
C3001
C3002
C3017
C3005
C3004
C3035
C3036
C3037
C3038
C3039
C3040
C3041
C3042
C3043
C3044
C3045
C3046
C3047
C3048
C3049
C3050
C3051
C3052
C3053
C3054
C3055
C3056
C3057
C3058
C3059
C3060
C3061
C3062
C3063
C3064
C3065
C3066
C3067
C3068
C3069
C3070
C3071
C3072
C3073
C3074

SAMSUNG CONFIDENTIAL
THIS DOCUMENT CONTAINS CONFIDENTIAL PROPRIETARY INFORMATION THAT IS SAMSUNG ELECTRONICS CO'S PROPERTY. DO NOT DISCLOSE TO OR DUPLICATE FOR OTHERS EXCEPT AS AUTHORIZED BY SAMSUNG.

Connectivity

NFC

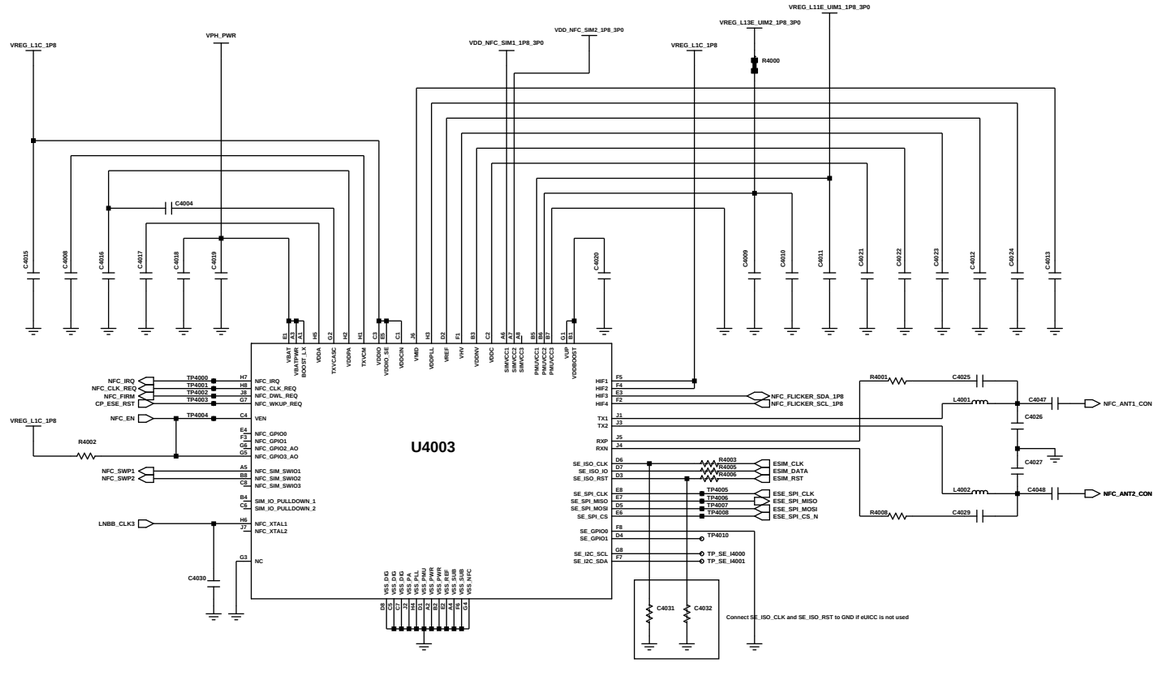

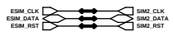

Power

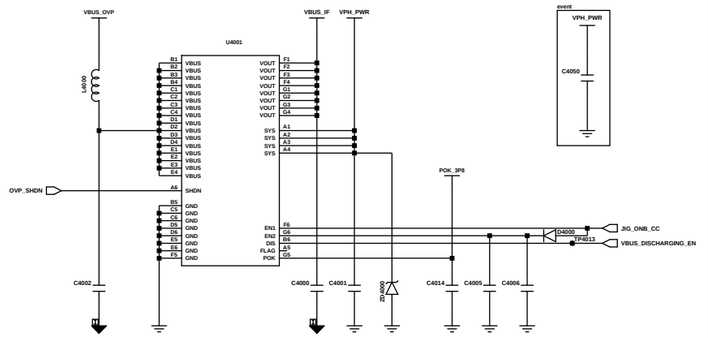

OVP LS

System

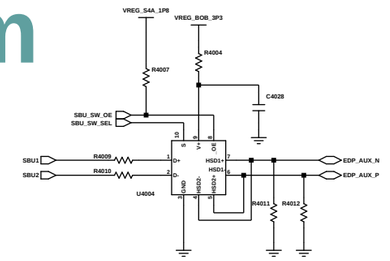

AUX sw

MFC

MST Switch

W/C CONNECTOR

SENSORS

Barometer SENSOR

6 Axis SENSOR (GYRO,ACCEL)

Power

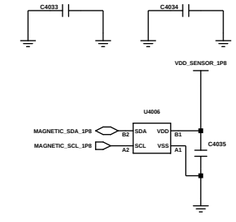

Magnetic SENSOR

Visual

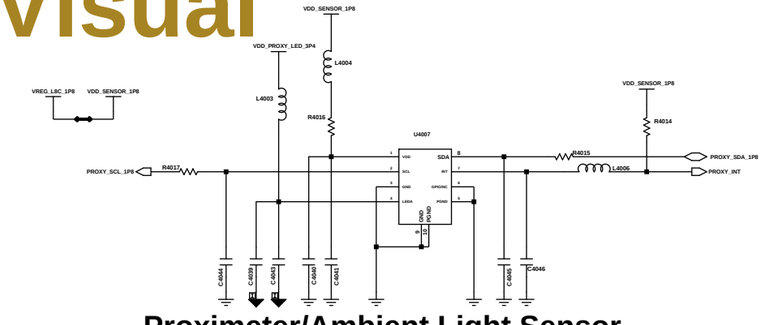

Proximeter/Ambient Light Sensor

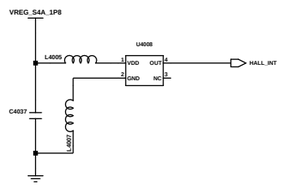

COVER_DET HALL_IC

Engineer: SEC			
Drawn by: SEC			
R&D CHK:	TITLE: SM8250 + SDX55M		Size: 16 1 12 A
DOC CTRL CHK:			
MFG ENGR CHK:	QA CHK:	REV:	Drawing Number:

Changed by: user33 | Date Changed: Friday, April 11, 2014 | Time Changed: 11:27:03 am | Page: 4

SAMSUNG CONFIDENTIAL
THIS DOCUMENT CONTAINS CONFIDENTIAL PROPRIETARY INFORMATION THAT IS SAMSUNG ELECTRONICS CO'S PROPERTY. DO NOT DISCLOSE TO OR DUPLICATE FOR OTHERS EXCEPT AS AUTHORIZED BY SAMSUNG.

SM8250

(INTERFACE, GPIO, GND)

System

C-PHY

UCP500-1

[1/4]

UCP500-3

[3/4]

UCP500-4

[4/4]

2D BARCODE

UFS

128G

512G

256G

USA

CHN

CAN

KOR

I2C PULL UP

Engineer	SEC
Drawn by:	SEC
R&D CHK:	
DOC CTRL CHK:	
MFG ENGR CHK:	
TITLE:	SM8250 + SDX55M
Size:	
Drawing Number	
Changed by:	
Date Changed:	
Time Changed:	
QA CHK:	

SAMSUNG CONFIDENTIAL
THIS DOCUMENT CONTAINS CONFIDENTIAL PROPRIETARY INFORMATION THAT IS SAMSUNG ELECTRONICS CO'S PROPERTY. DO NOT DISCLOSE TO OR DUPLICATE FOR OTHERS EXCEPT AS AUTHORIZED BY SAMSUNG.

SM8250

(POWER & DeCAP)

Power System

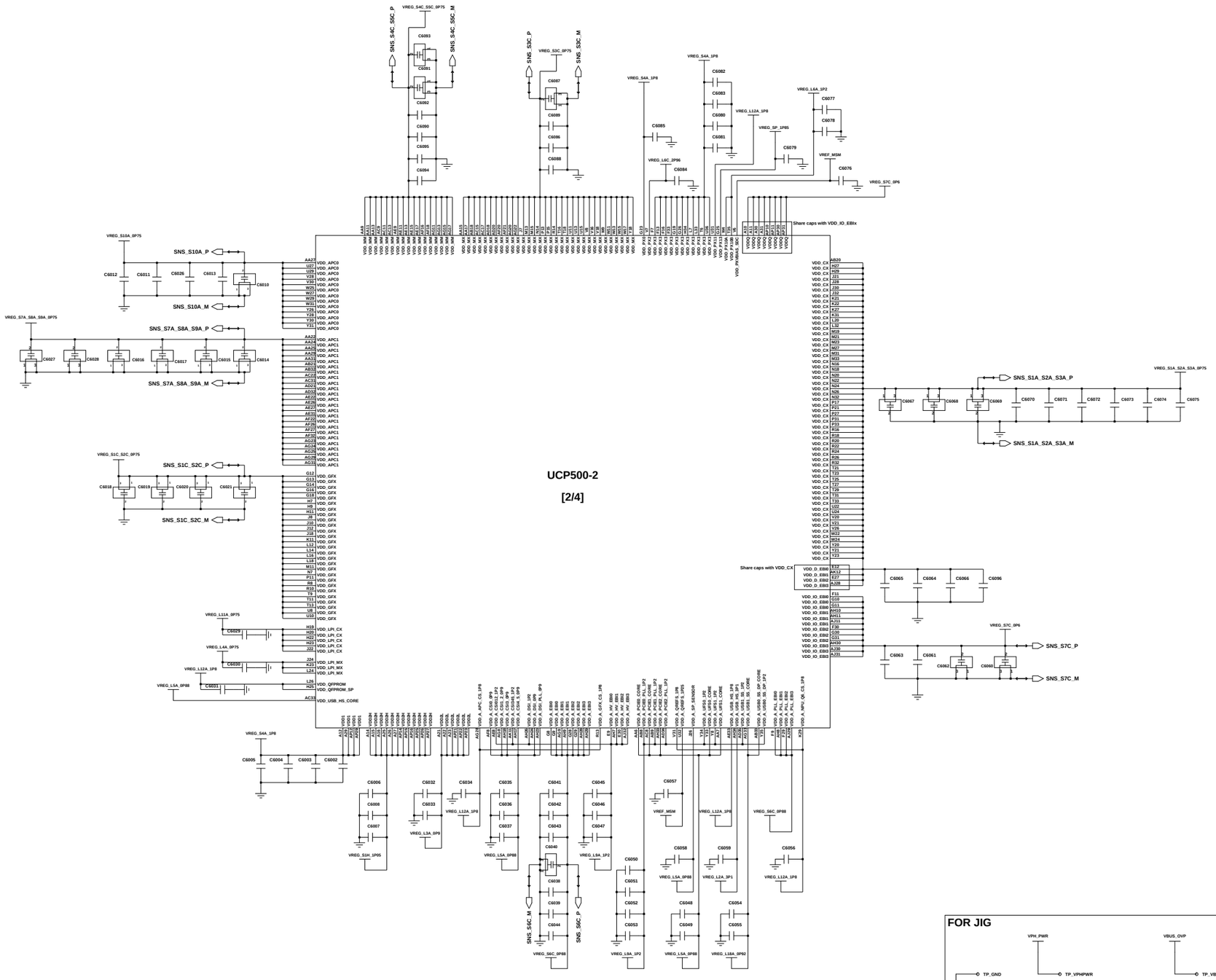

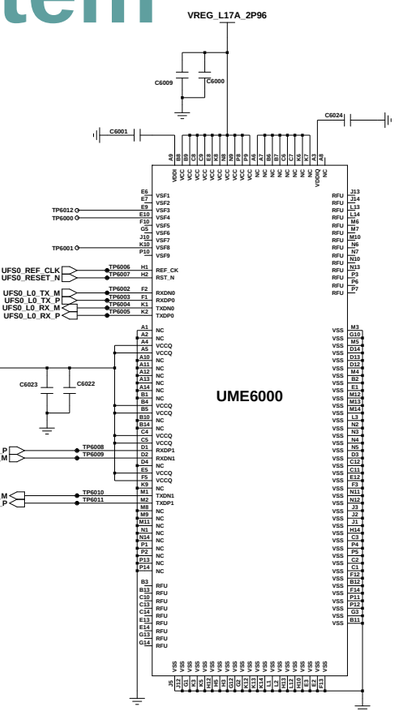

UFS 128GB / 512GB

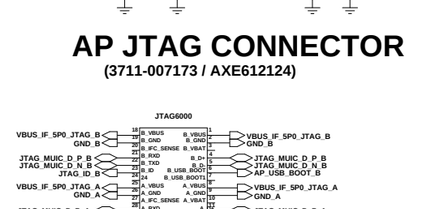

AP JTAG CONNECTOR

(3711-007173 / AXE612124)

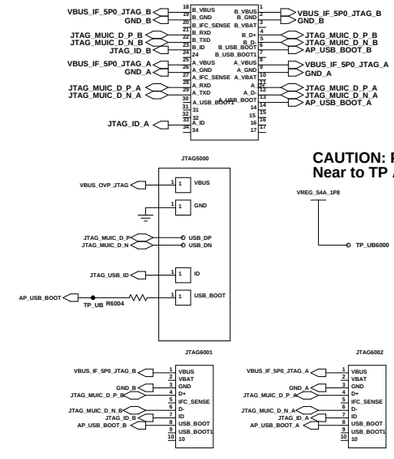

CAUTION: PLACEMENT
Near to TP AP_USB_BOOT

PCB array JTAG

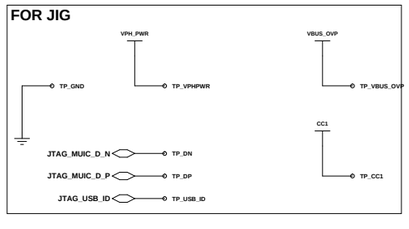

Changed by:	Date Changed:	Time Changed:	QA CHK:	Engineer: SEC			
				Drawn by: SEC			
				R&D CHK:	TITLE: SM8250 + SDX55M		Size:
				DOC CTRL CHK:			
				MFG ENGR CHK:			
					REV	Drawing Number:	Page:

SAMSUNG CONFIDENTIAL
THIS DOCUMENT CONTAINS CONFIDENTIAL INFORMATION AND PROPRIETARY TO SAMSUNG ELECTRONICS CO.LTD. PROPERTY. DO NOT DISCLOSE TO OR DUPLICATE FOR OTHERS EXCEPT AS AUTHORIZED BY SAMSUNG.

AP PMIC set & CLK Generator

Power System

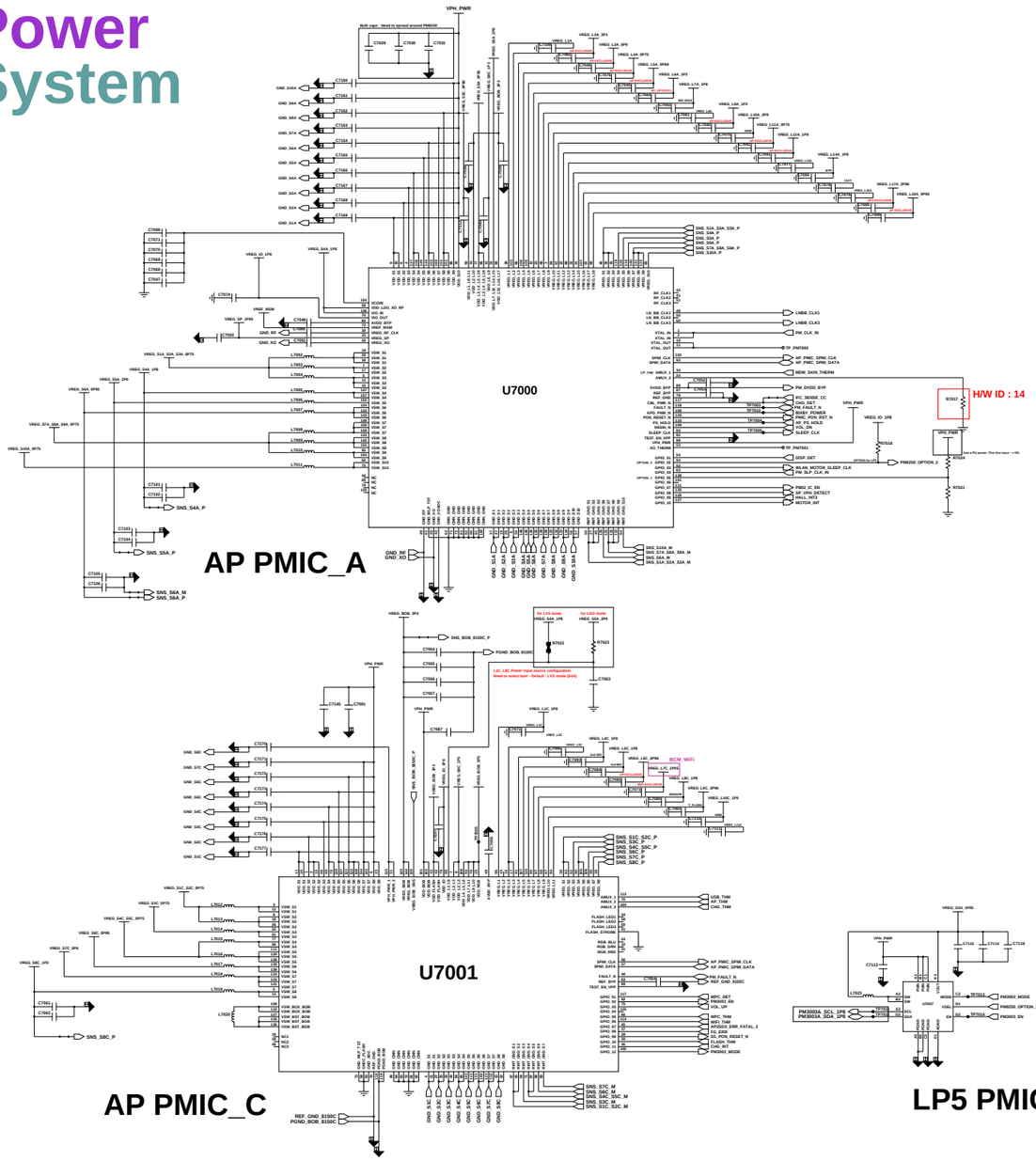

SAMSUNG CONFIDENTIAL
THIS DOCUMENT CONTAINS CONFIDENTIAL PROPRIETARY INFORMATION THAT IS SAMSUNG ELECTRONICS CO'S PROPERTY. DO NOT DISCLOSE TO OR DUPLICATE FOR OTHERS EXCEPT AS AUTHORIZED BY SAMSUNG.

AUDIO PART

AUDIO

SPK AMP

SPK CONTACT

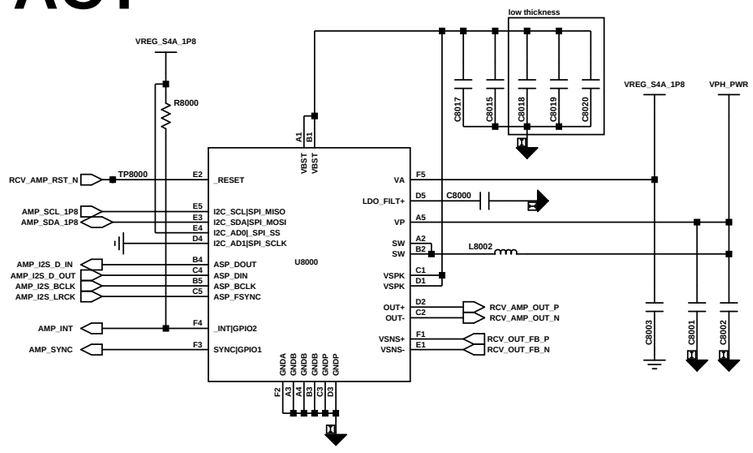

RCV AMP

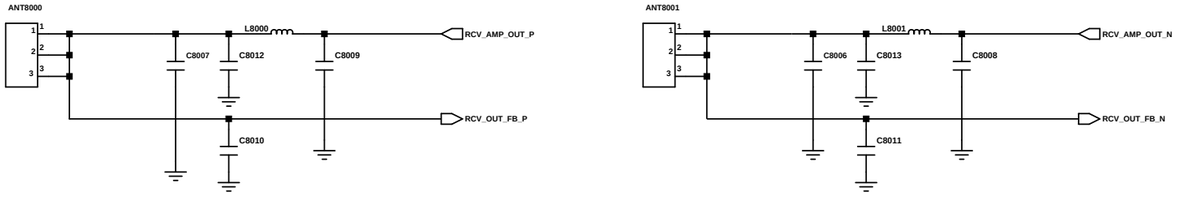

RCV CONTACT

MAIN MIC

2nd MIC

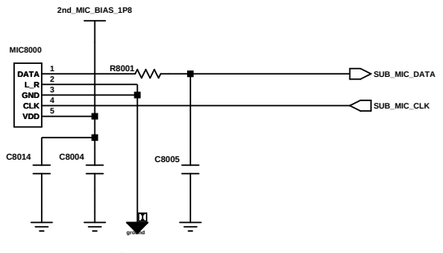

3rd MIC

Engineer: SEC	SAMSUNG ELECTRONICS				
Drawn by: SEC					
R&D CHK:	TITLE: SM8250 + SDX55M				Size: 12 1 8 A
DOC CTRL CHK:					
MFG ENGR CHK:					
Changed by: user	Date Changed: Tuesday, April 2, 2019	Time Changed: 4:11:40 pm	QA CHK:	REV	Drawing Number:

Page: 8

SAMSUNG CONFIDENTIAL
THIS DOCUMENT CONTAINS CONFIDENTIAL PROPRIETARY INFORMATION THAT IS SAMSUNG ELECTRONICS CO'S PROPERTY. DO NOT DISCLOSE TO OR DUPLICATE FOR OTHERS EXCEPT AS AUTHORIZED BY SAMSUNG.

CAMERA

Visual

CAM PMIC (PB02)

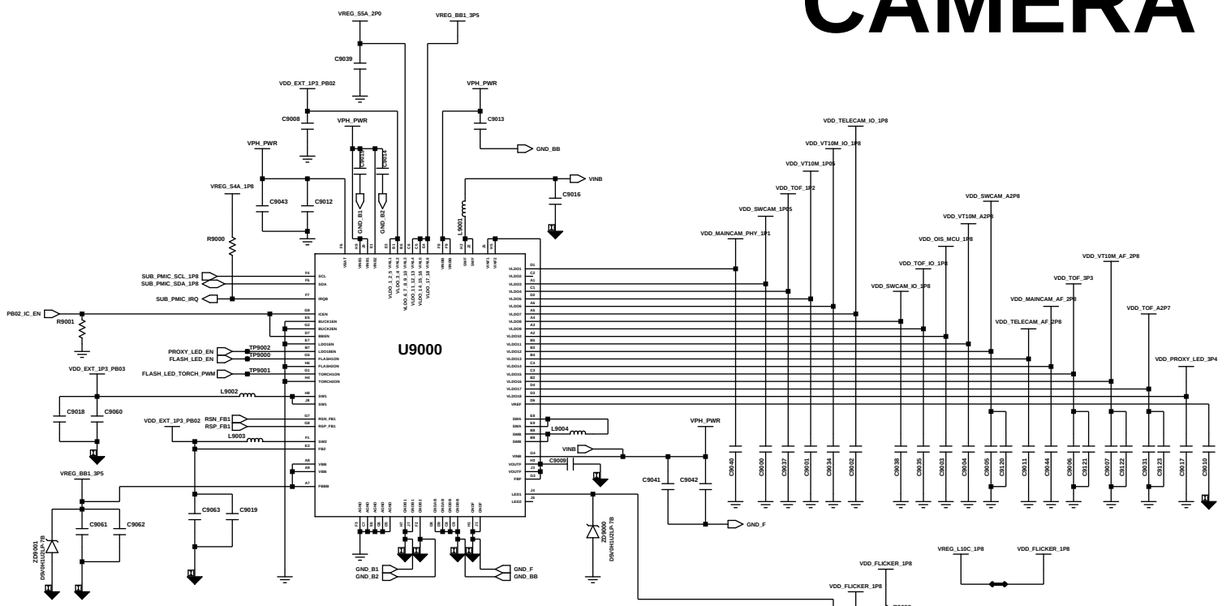

DUAL CAM CONN

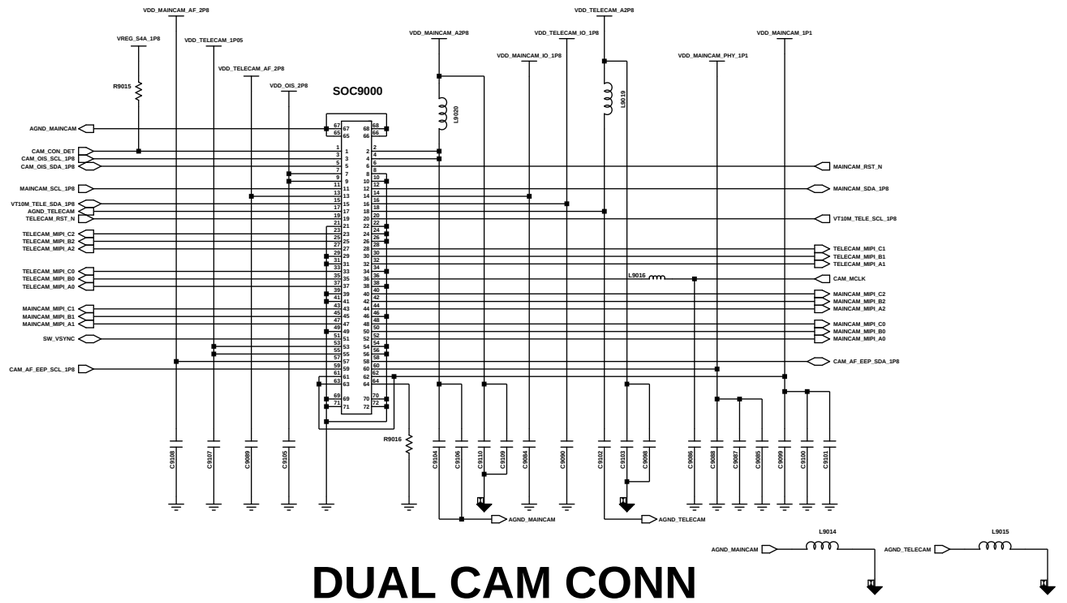

2ND CAM PMIC (PB03)

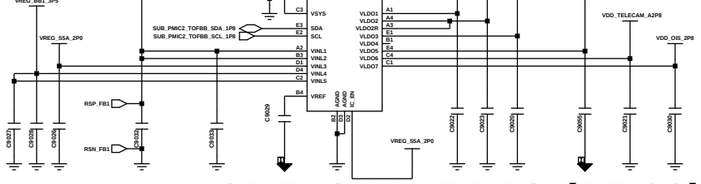

SUPER WIDE CAM CONN

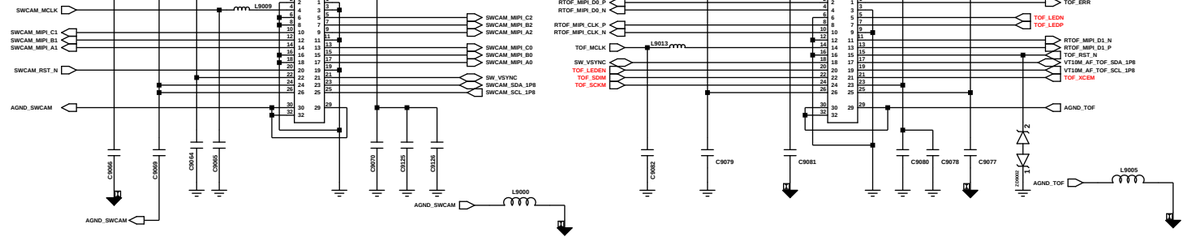

REAR TOF CAM CONN

TOF

TOF VGA POWER

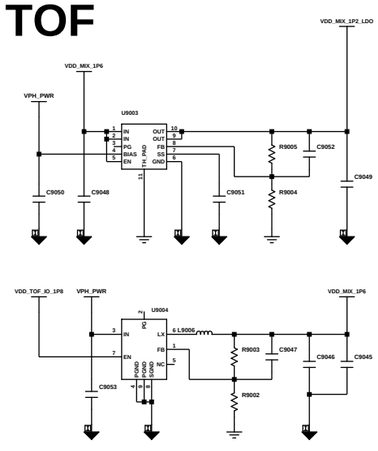

TOF LED

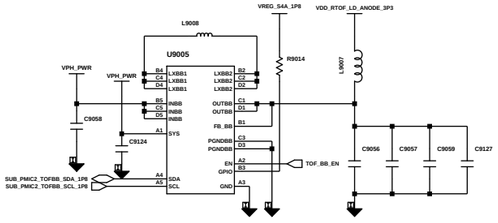

TOF TX

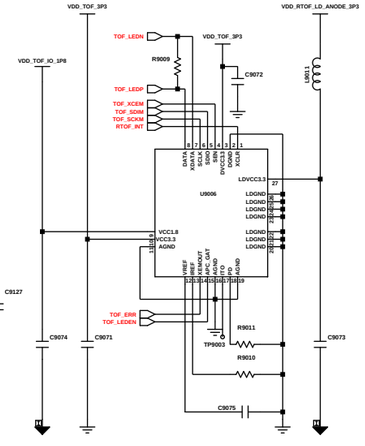

FRONT CAM(10M SINGLE)

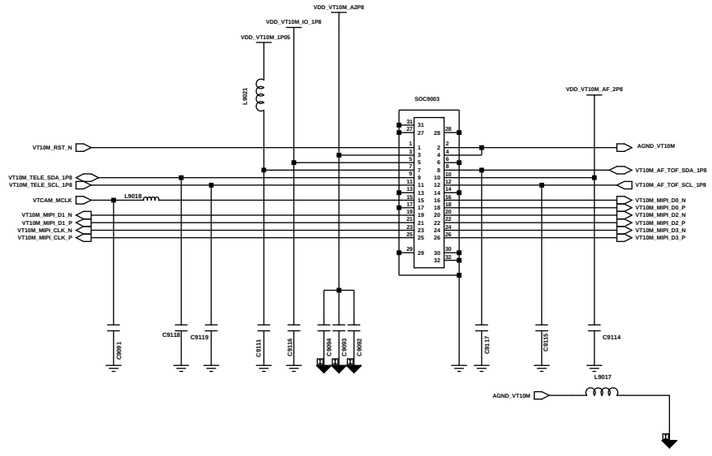

CAM MCU

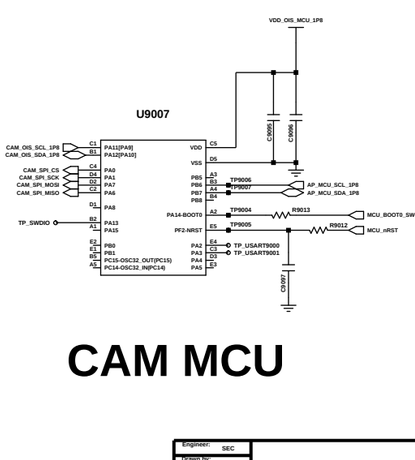

Engineer: SEC			
Drawn by: SEC			
R&D CHK:		TITLE: SM8250 + SDX55M	Size:
DOC CTRL CHK:			
MFG ENGR CHK:			
QA CHK:		REV:	Drawing Number:
Changed by:	Date Changed:	Time Changed:	Page: 3

SAMSUNG CONFIDENTIAL
THIS DOCUMENT CONTAINS CONFIDENTIAL PROPRIETARY INFORMATION THAT IS SAMSUNG ELECTRONICS CO'S PROPERTY. DO NOT DISCLOSE TO OR DUPLICATE FOR OTHERS EXCEPT AS AUTHORIZED BY SAMSUNG.

DISPLAY

Visual

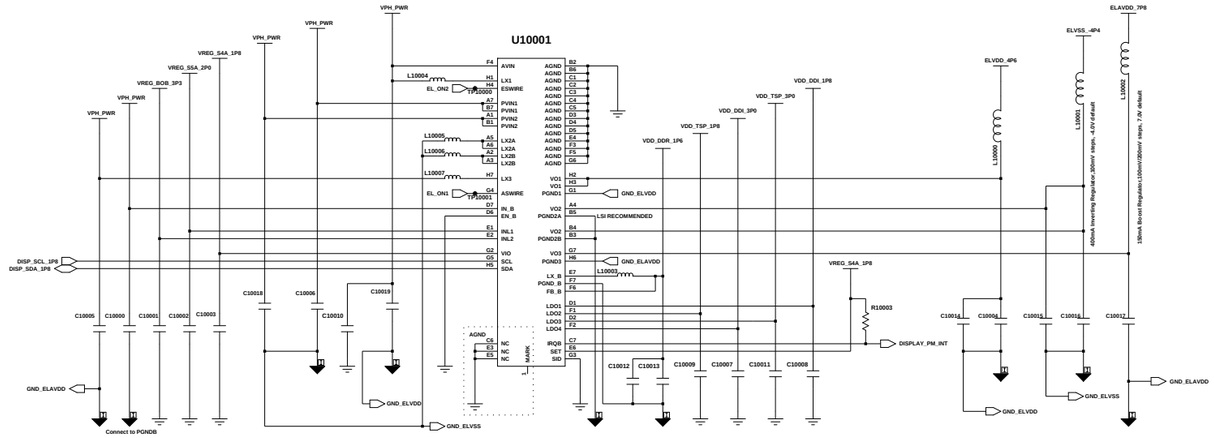

DISPLAY PMIC

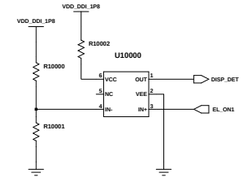

DISPLAY CONNECTOR

Engineer: SEC					
Drawn by: SEC					
R&D CHK:			TITLE:		Size:
DOC CTRL CHK:			SM8250 + SDX55M		
MFG ENGR CHK:					
Changed by:	Date Changed:	Time Changed:	QA CHK:	REV:	Drawing Number: Page: 10

SAMSUNG CONFIDENTIAL
THIS DOCUMENT CONTAINS CONFIDENTIAL
PROPRIETARY INFORMATION THAT IS
SAMSUNG ELECTRONICS CO'S PROPERTY.
DO NOT DISCLOSE TO OR DUPLICATE FOR OTHERS
EXCEPT AS AUTHORIZED BY SAMSUNG.

SDX55M

System

U11000-1

[1/3]

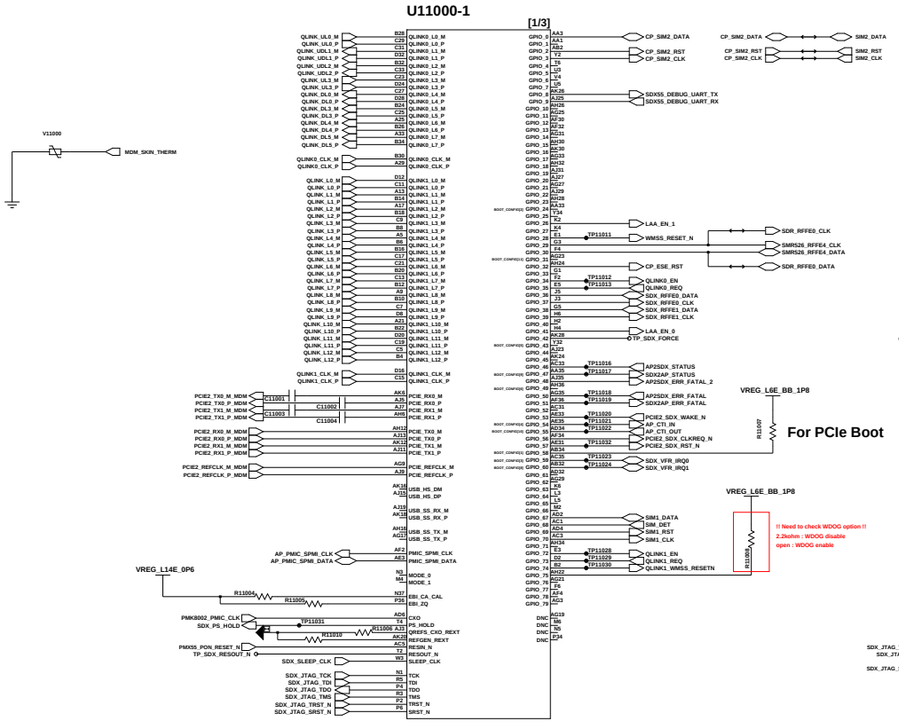

U11000-2

[2/3]

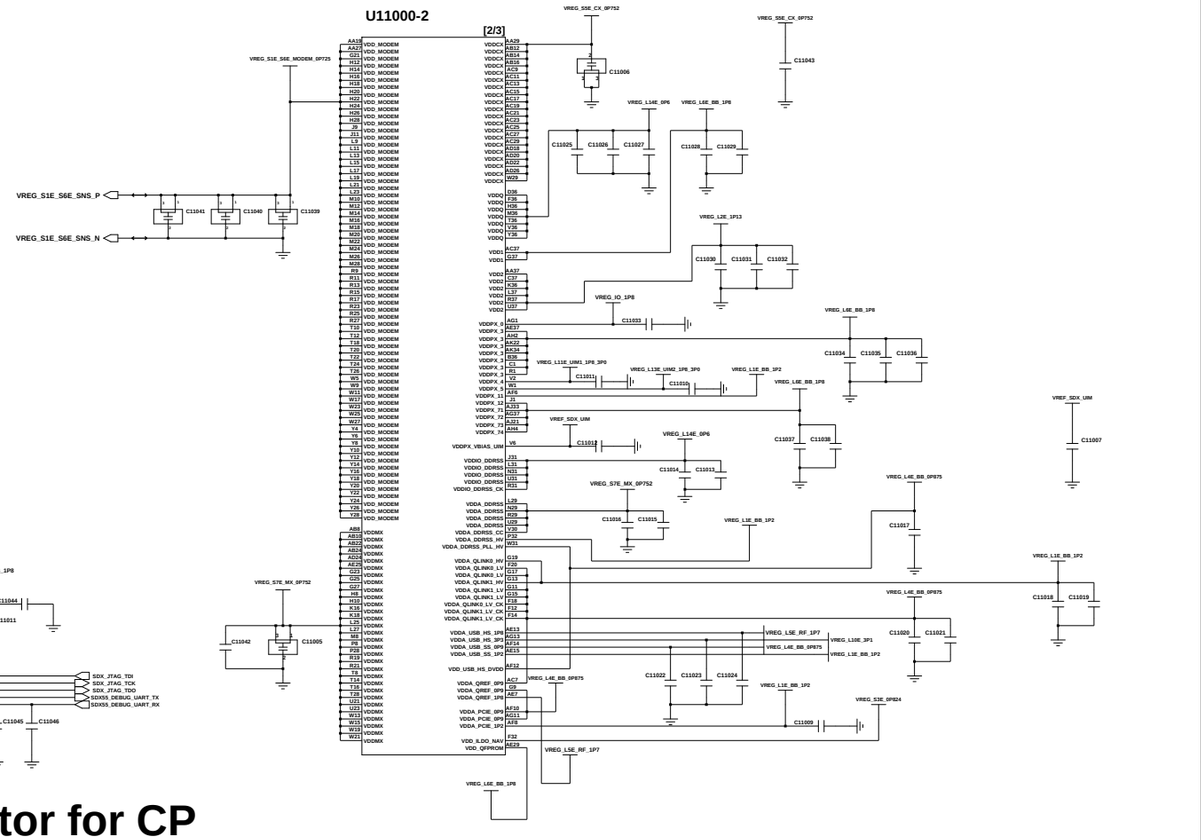

JTAG connector for CP

U11000-3

[3/3]

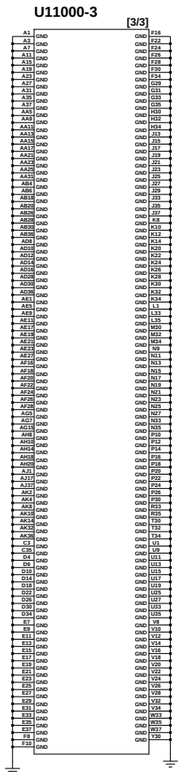

Changed by: cad	Date Changed: Thursday, December 1, 2016	Time Changed: 3:17:21 pm	QA CHK:	REV:	Drawing Number:

Engineer: SEC	SAMSUNG ELECTRONICS
Drawn by: SEC	
R&D CHK:	TITLE: SM8250 + SDX55M
DOC CTRL CHK:	Size:
MFG ENGR CHK:	Page: 12

SAMSUNG CONFIDENTIAL
THIS DOCUMENT CONTAINS CONFIDENTIAL
PROPRIETARY INFORMATION THAT IS
SAMSUNG ELECTRONICS CO'S PROPERTY.
DO NOT DISCLOSE TO OR DUPLICATE FOR OTHERS
EXCEPT AS AUTHORIZED BY SAMSUNG.

CP PMIC

Power

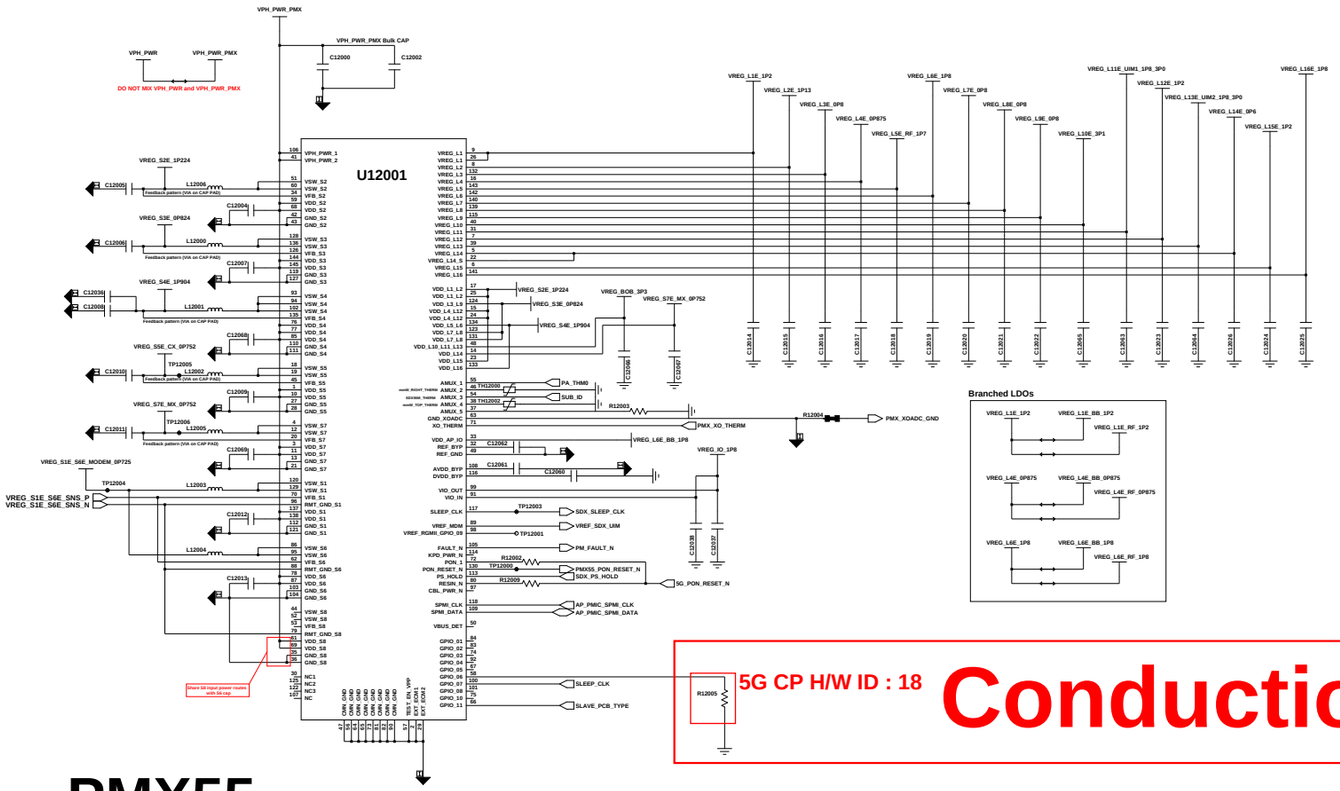

CP H/W ID table (PMX55 GPIO_06)

HW ID	BOARD REVISION	Value	Mech
00	SM8250+SDX55M Rev0.0	6.04K	
01		9.1K	
02	P2_REV0.0	12.4K	KI10
03	P2_REV0.0A	18K	KI10
04	P2_REV0.1	22K	KI20
05	P2_REV0.1(AP/CP V2.0 / TRCV V3.0)	30K	
06	SM-G986U_REV0.0(AP V1.0)	39K	KI30
07	SM-G986U_REV0.0(AP V1.0)	47K	KI30
08	SM-G986U_REV0.1	56K	KI40
09	SM-G986U_REV0.1 (QPM6585 NC)	68K	KI40
10	SM-G986U_REV0.1 (QPM6585,8972 NC)	82K	KI40
11	SM-G986U_REV0.2	100K	KI50
12	SM-G986U_REV0.3	120K	VY60
13	SM-G986U_REV0.3A	150K	VY60
14	SM-G986U_REV0.4	180K	VY70
15	SM-G986U_REV0.4 (QAT5515)	200K	VY70
16	SM-G986U_REV0.5	240K	VY75
17	SM-G986U_REV0.5A	280K	VY75
18	SM-G986U_REV0.5A	330K	VY75
19		430K	
20		560K	
21		750K	
22		1000K	
23		1500K	
24		3000K	

PMX55

5G CP H/W ID : 18

Conduction

5G IFIC

CAN NC

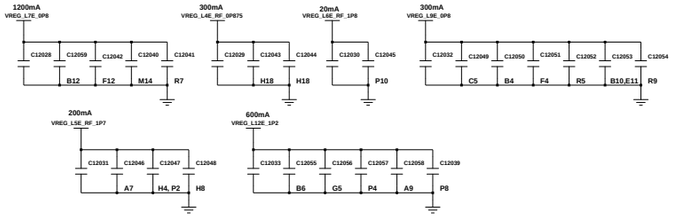

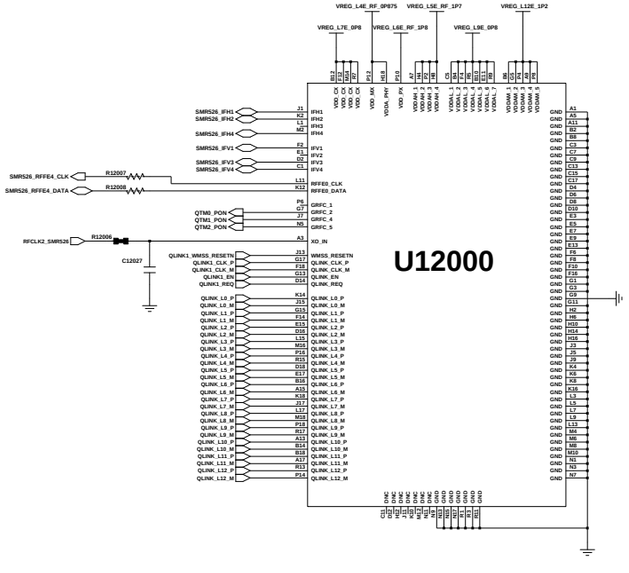

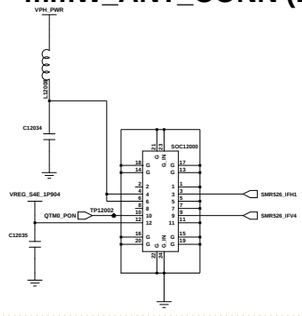

mmW_ANT_CONN (Right)

mmW_ANT_CONN (Up)

Radiation

Changed by:	Date Changed:	Time Changed:	QA CHK:	REV:	Drawing Number:	Page:
cad	Thursday, December 1, 2016	3:17:21 pm				13

Engineer:	SEC	SAMSUNG ELECTRONICS	
Drawn by:	SEC		
R&D CHK:		TITLE:	Size:
DOC CTRL CHK:		SM8250 + SDX55M	
MFG ENGR CHK:			

SAMSUNG CONFIDENTIAL
THIS DOCUMENT CONTAINS CONFIDENTIAL
PROPRIETARY INFORMATION THAT IS
SAMSUNG ELECTRONICS CO'S PROPERTY.
DO NOT DISCLOSE TO OR DUPLICATE FOR OTHERS
EXCEPT AS AUTHORIZED BY SAMSUNG.

INTERPOSER

Design

INP13000

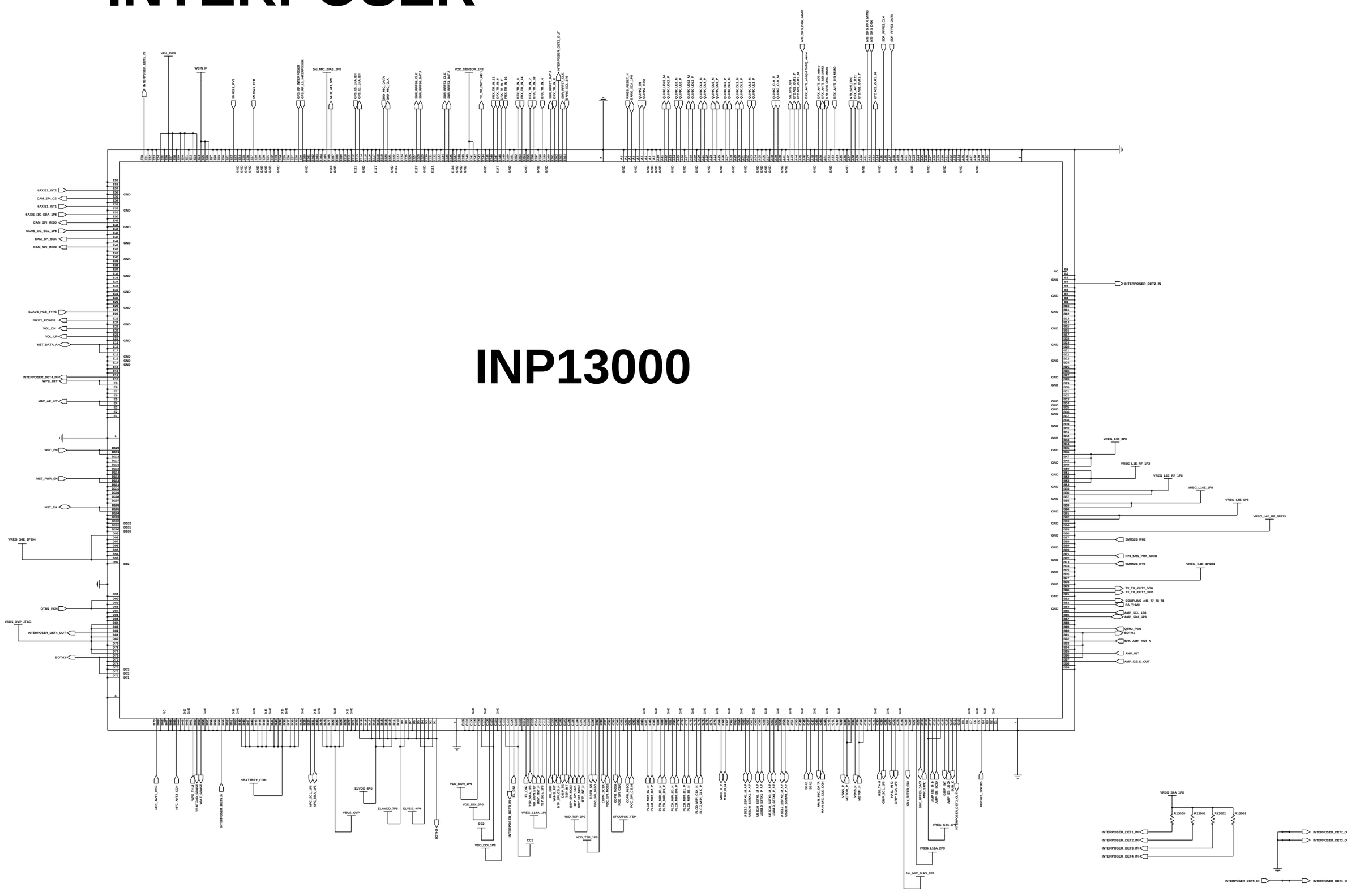

Engineer: SEC	SAMSUNG ELECTRONICS		
Drawn by: SEC			
R&D CHK:	TITLE: SM8250 + SDX55M		Size:
DOC CTRL CHK:			
MFG ENGR CHK:			
Changed by: cad	Date Changed: Thursday, December 1, 2016	Time Changed: 3:17:21 pm	QA CHK:
REV:	Drawing Number:		Page: 14

SAMSUNG CONFIDENTIAL
THIS DOCUMENT CONTAINS CONFIDENTIAL PROPRIETARY INFORMATION THAT IS SAMSUNG ELECTRONICS CO'S PROPERTY. DO NOT DISCLOSE TO OR DUPLICATE FOR OTHERS EXCEPT AS AUTHORIZED BY SAMSUNG.

HUBBLE 2 CAN SLAVE REV0.5A

2019. 12.16

METAL Ver(200107)
0210 change R21004, R21005

sheet01 : RF (1/2), MMW Conn
sheet02 : RF (2/2), TRCV_SDR865
sheet03 : BT/WIFI, SIM, SHILDCAN
sheet04 : MFC, MFC Conn, 6XIS, BATT Conn, SPK AMP
sheet05 : Lower SUB Conn, KEYLESS, DISPLAY Con
sheet06 : INTERPOSER

Engineer:
Drawn by:
R&D CHK:
DOC CTRL CHK:
MFG ENGR CHK:
TITLE:
Size:
Changed by: user93
Date Changed:
Time Changed:
QA CHK:
REV
Drawing Number:
Page: 0

SAMSUNG CONFIDENTIAL
THIS DOCUMENT CONTAINS CONFIDENTIAL INFORMATION AND PROPERTY OF SAMSUNG ELECTRONICS CO., LTD. IT IS PROPRIETARY. DO NOT DISCLOSE TO OR DUPLICATE FOR OTHERS EXCEPT AS AUTHORIZED BY SAMSUNG.

Conduction

NA/CHN :DPX252690DT-5187B1K Diplexer
JPN : LFD2H829MMZAE751 Triplexer

Check SMD Option

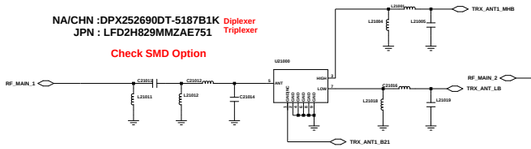

MAIN1 ANT
(LB,MB,JPN B21)

N79 NA not support , CHN/JPN support

NA SM
CHN/JPN NC

NA NC
CHN/JPN SM

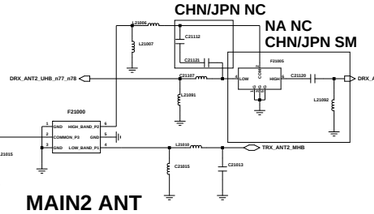

MAIN2 ANT
(HB,DRX_UHB_n77_n78 , n79)

MAIN3 ANT
(PRX hb MIMO , PRX uhb/n77/n78 mimo)

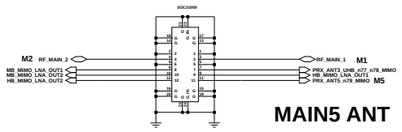

MAIN5 ANT
(PRX n79_mimo)

MAIN4 ANT
(PRX mb MIMO)

FRC connector

MMW
CHN : NC
CAN : NC

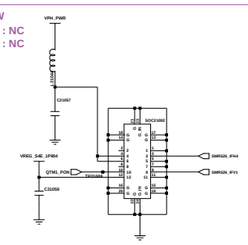

mmW_ANT_CONN (Left)

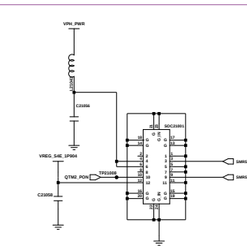

mmW_ANT_CONN (Right)

SMD option (B21)

NA / CHN no support

JPN support

JPN

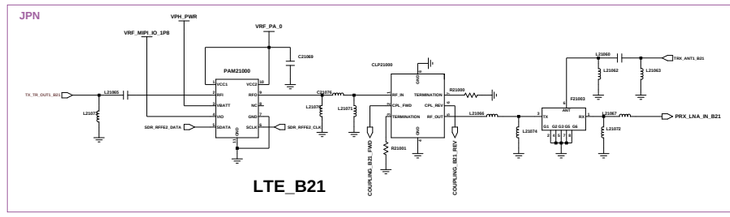

LTE_B21

2G_PA

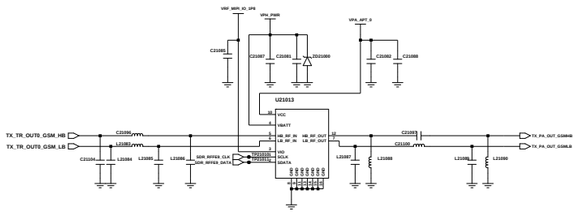

THERMISTER

LB LPAMID
(B5/8/12/13/14/17/20/26/28/29/71, G850/900, BC0/10)

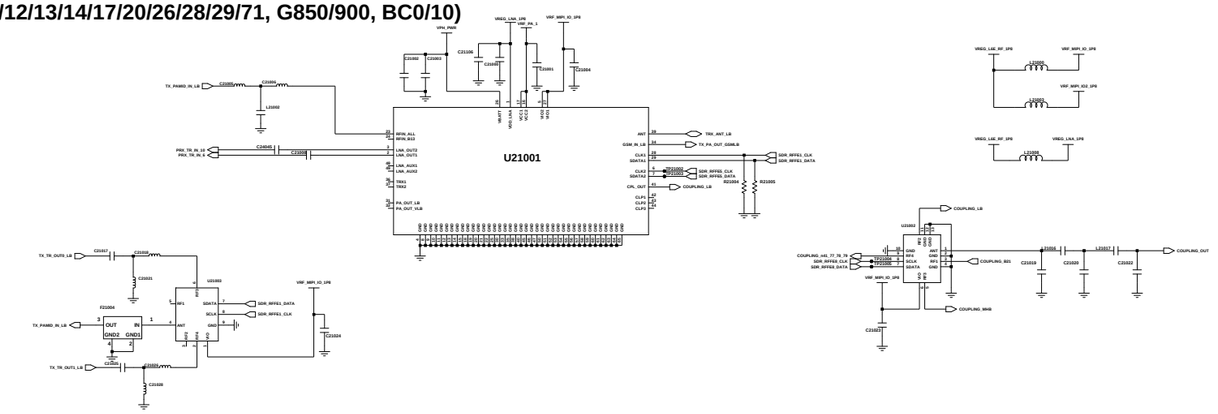

OMH LPAMID
(B1/2/3/4/7/25/30/34/38/39/40/41/66, G1800/1900, BC1)

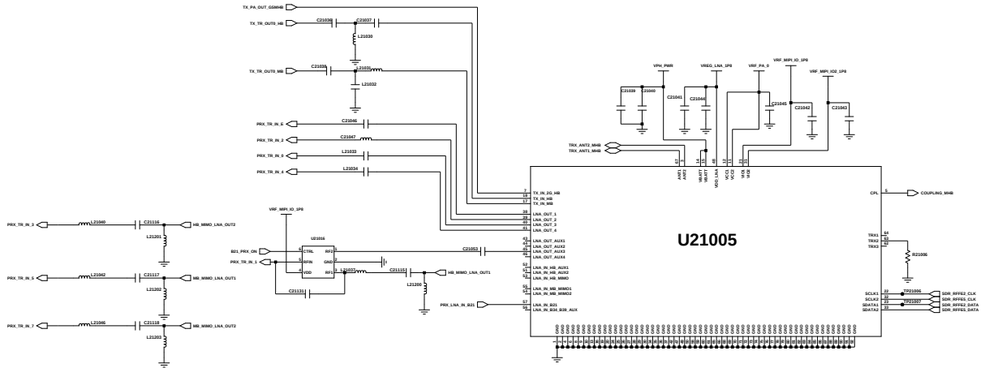
U21005
TX_PA_OUT_GSMHB
TX_TR_OUT0_HB
TX_TR_OUT0_MB
C21038
C21037
C21030
C21035
L21032
PRX_TR_IN_3
PRX_TR_IN_2
PRX_TR_IN_1
PRX_TR_IN_0
C21046
C21047
L21033
L21034
VPH_PWR
VREG_LNA_1P8
VRF_PA_0
VRF_MIPI_IO_1P8
TRX_ANT2_MHB
TRX_ANT1_MHB
C21039
C21040
C21041
C21044
C21042
C21043
LNA_OUT_1
LNA_OUT_2
LNA_OUT_3
LNA_OUT_4
LNA_OUT_AUX1
LNA_OUT_AUX2
LNA_OUT_AUX3
LNA_OUT_AUX4
LNA_IN_HB_AUX1
LNA_IN_HB_AUX2
LNA_IN_HB_MIMO
LNA_IN_MB_MIMO1
LNA_IN_MB_MIMO2
LNA_IN_B21
LNA_IN_B34_B39_AUX
PRX_LNA_IN_B21
B21_PRX_ON
C21053
C21051
C21052
HB_MIMO_LNA_OUT1
MB_MIMO_LNA_OUT1
MB_MIMO_LNA_OUT2
HB_MIMO_LNA_OUT2
L21035
L21036
L21037
L21038
L21039
L21040
L21041
L21042
L21043
L21044
L21045
L21046
C21048
C21049
C21050
C21054
C21055
C21056
C21057
C21058
C21059
C21060
C21061
C21062
C21063
C21064
C21065
C21066
C21067
C21068
C21069
C21070
C21071
C21072
C21073
C21074
C21075
C21076
C21077
C21078
C21079
C21080
C21081
C21082
C21083
C21084
C21085
C21086
C21087
C21088
C21089
C21090
C21091
C21092
C21093

SAMSUNG CONFIDENTIAL
THIS DOCUMENT CONTAINS CONFIDENTIAL
PROPRIETARY INFORMATION THAT IS
SAMSUNG ELECTRONICS CO'S PROPERTY.
DO NOT DISCLOSE TO OR DUPLICATE FOR OTHERS
EXCEPT AS AUTHORIZED BY SAMSUNG.

TRANSCEIVER(SDR865) Conduction

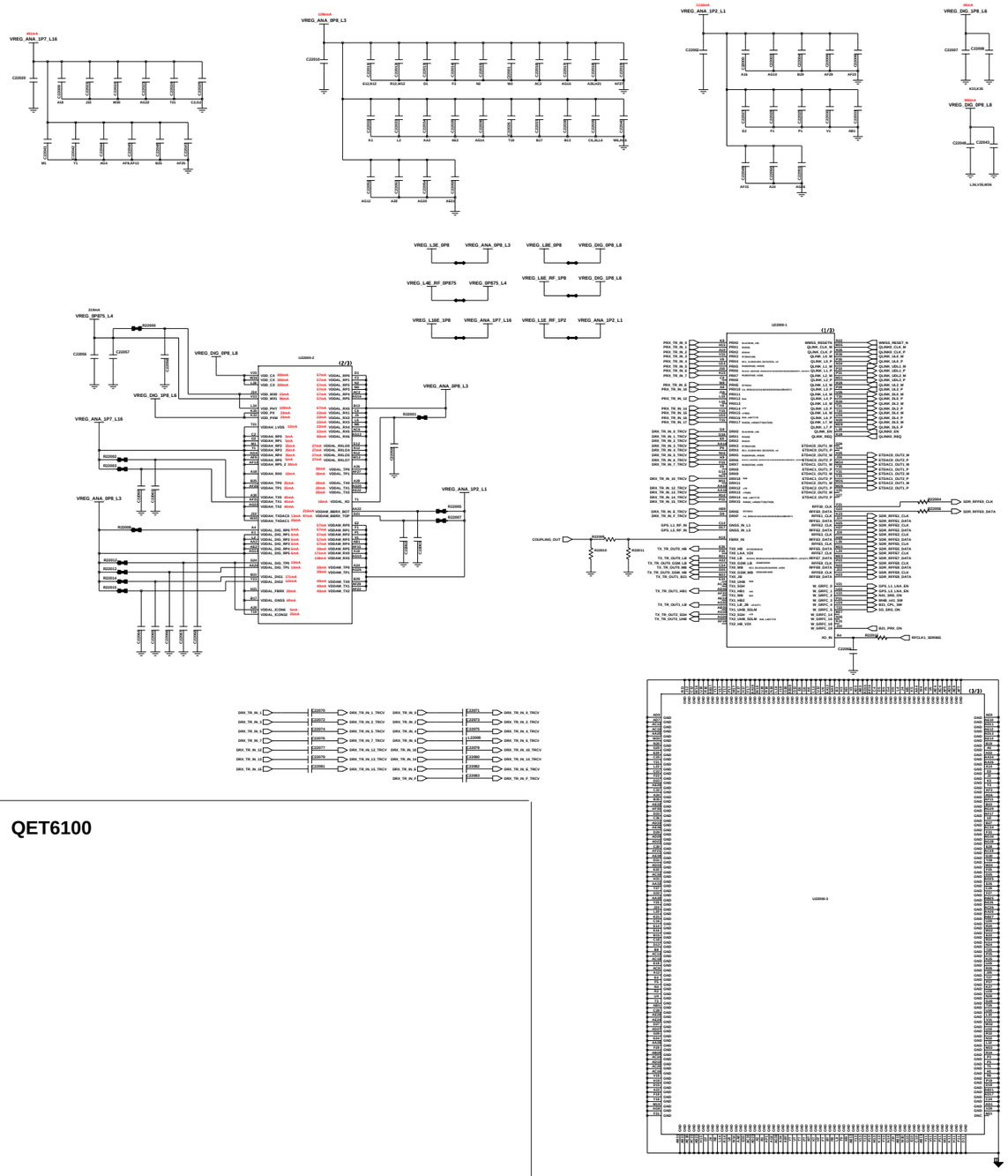

QET6100

DRX_ANT Radiation

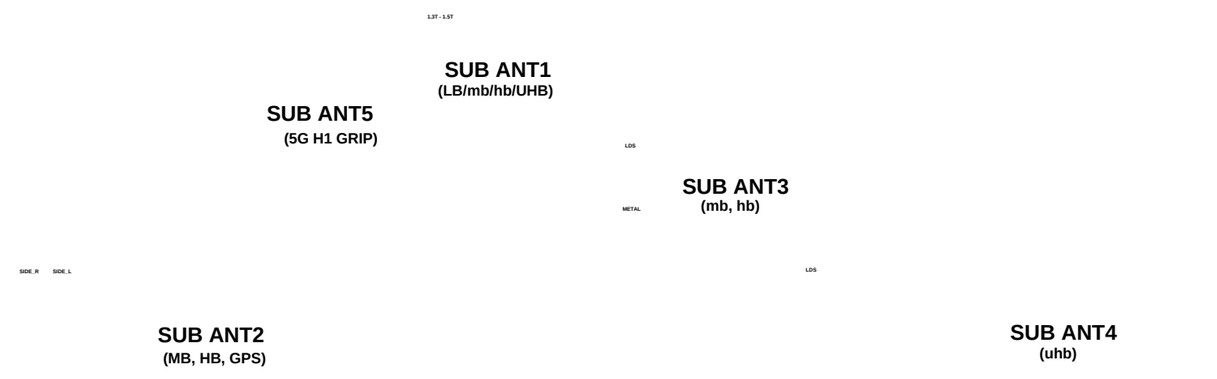

DRX_LB
(B5/8/12/13/14/17/18/19/20/26/28/29/71_BC0/10_G850/900)

Conduction

DRX_MHB_1
(B1/2/3/4/7/25/30/39/41/66_BC1_DCS/PCS)

DRX_MHB_2
(B2/4/7/25/30/41/66)

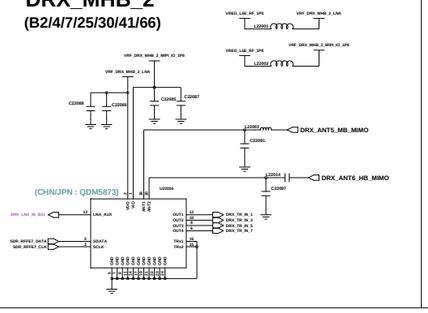

UHB
(n79)

N79 NA not support , CHN/JPN support
N79 SRS NA/JPN not support , CHN support

JPN : U22006 NC / C22106, C22107 SM
CHN : U22006 SM

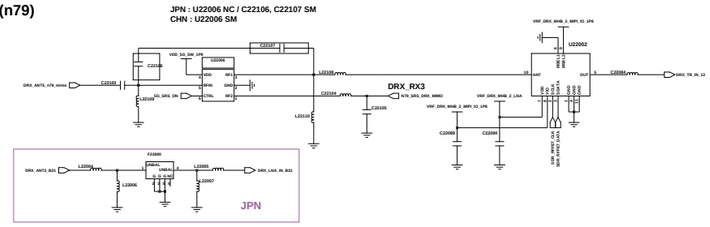

GPS_L1 Connectivity

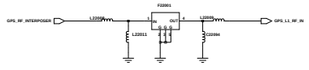

GPS_L5

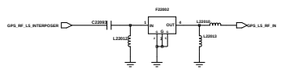

UHB
(B48, n77/78)

N78 SRS NA/JPN not support , CHN support

NA/ JPN : U22001 NC, C22098 NC
CHN : U22001 SM, C22100 NC

SRS - 1T4R
(n77/78)

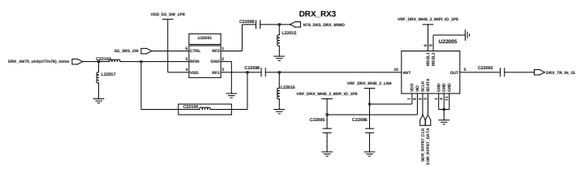

SM8250 + SDX55M

SAMSUNG CONFIDENTIAL
THIS DOCUMENT CONTAINS CONFIDENTIAL PROPRIETARY INFORMATION THAT IS SAMSUNG ELECTRONICS CO'S PROPERTY. DO NOT DISCLOSE TO OR DUPLICATE FOR OTHERS EXCEPT AS AUTHORIZED BY SAMSUNG.

Power

MFC

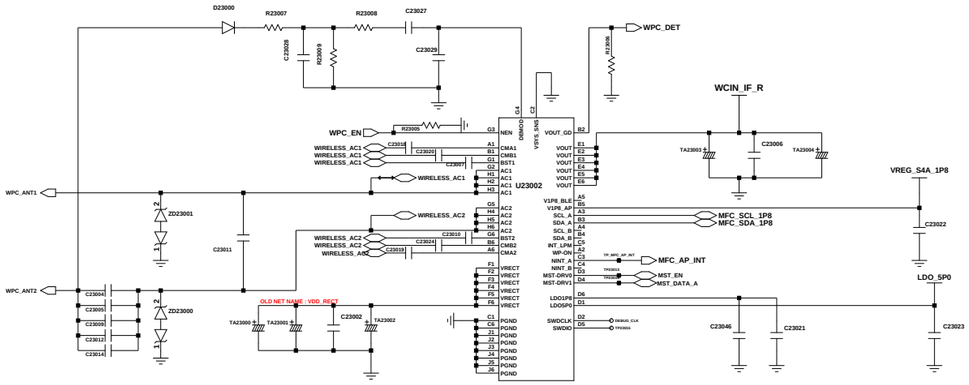

MST Switch

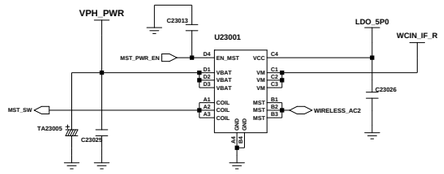

NFC

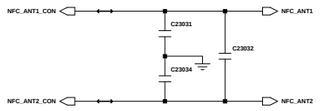

WCIN_IF_R — WCIN_IF

VREG_S4A_1P8 — R23013 — MFC_SCL_1P8; R23014 — MFC_SDA_1P8

AUDIO

SPK AMP

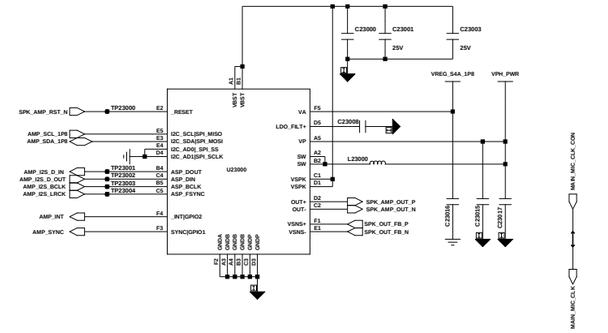

3rd MIC

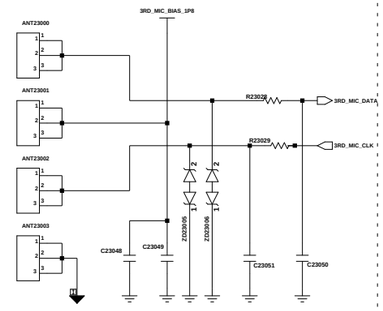

Visual

W/C CONNECTOR

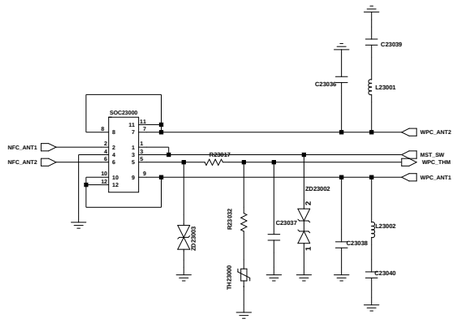

Battery Connector

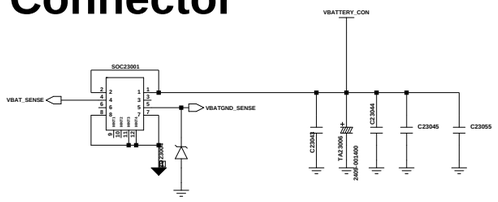

Power

SENSORS

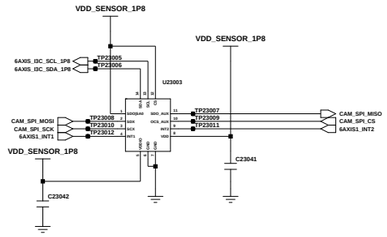

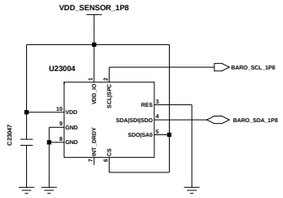

6 Axis SENSOR (GYRO,ACCEL)

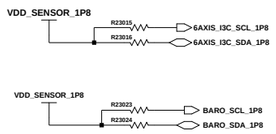

System

SLAVE_TYPE

	ADC
NA_Sub6_mmW(G986U)	68K
NA_CAN_Sub6(G986W)	100K
CHN_SUB6(G9860)	150K
LA_LTE	200K
KOR_Sub6(G956N)	270K
MEA_LTE	430K
JPN_mmW(G986D)	750K
JPN_LTE	1500K
For JIG	OPEN

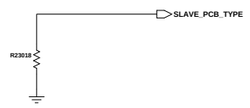

NA — R23020
CHN_Sub6 — R23021
JPN_mmW — R23022
CAN_Sub6 — R23033
KOR — R23034

Engineer:	SEC
Drawn by:	SEC
R&D CHK:	
DOC CTRL CHK:	
MFG ENGR CHK:	
QA CHK:	

TITLE: SM8250 + SDX55M
Size: 16 1 12 A
REV | Drawing Number: | Page: 1

Changed by: user35 | Date Changed: Friday, April 11, 2014 | Time Changed: 11:27:55 pm

SAMSUNG CONFIDENTIAL
THIS DOCUMENT CONTAINS CONFIDENTIAL
PROPRIETARY INFORMATION THAT IS
SAMSUNG ELECTRONICS CO'S PROPERTY.
DO NOT DISCLOSE TO OR DUPLICATE FOR OTHERS
EXCEPT AS AUTHORIZED BY SAMSUNG.

System

Lower SUB Conn

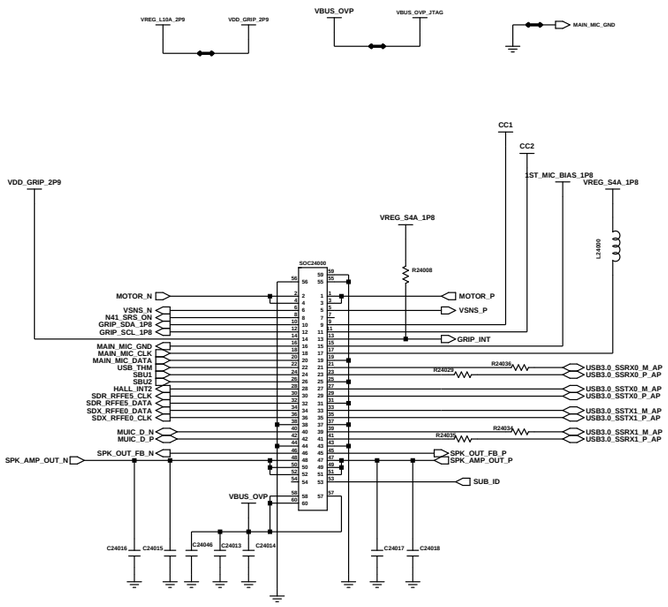

Vol key

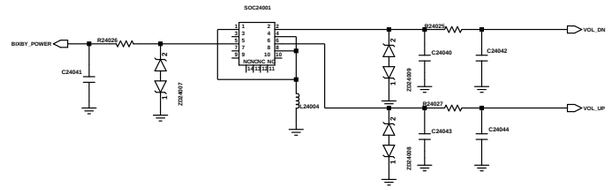

Visual

DISPLAY

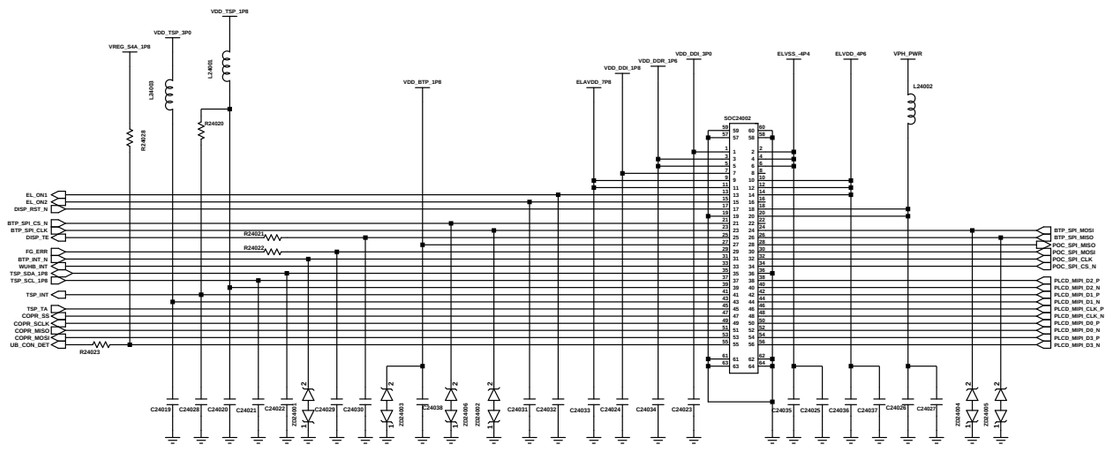

DISPLAY CONNECTOR

Design

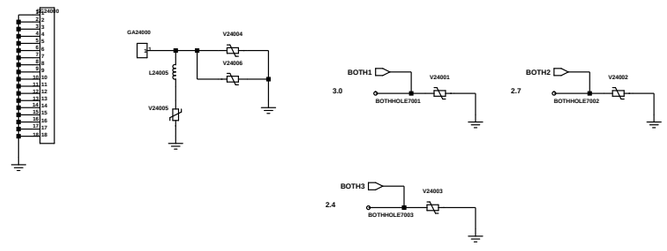

SHIELD CAN

BOSS HOLE

2D BACODE

Changed by: cad	Date Changed: Thursday, December 1, 2016	Time Changed: 3:17:21 pm	QA CHK:

Engineer: SEC	SAMSUNG ELECTRONICS		
Drawn by: SEC			
R&D CHK:	TITLE:		Size:
DOC CTRL CHK:	SM8250 + SDX55M		
MFG ENGR CHK:			
REV:	Drawing Number:	Page: 11	

SAMSUNG CONFIDENTIAL
THIS DOCUMENT CONTAINS CONFIDENTIAL PROPRIETARY INFORMATION THAT IS SAMSUNG ELECTRONICS CO'S PROPERTY. DO NOT DISCLOSE TO OR DUPLICATE FOR OTHERS EXCEPT AS AUTHORIZED BY SAMSUNG.

INTERPOSER

Design

INP25000

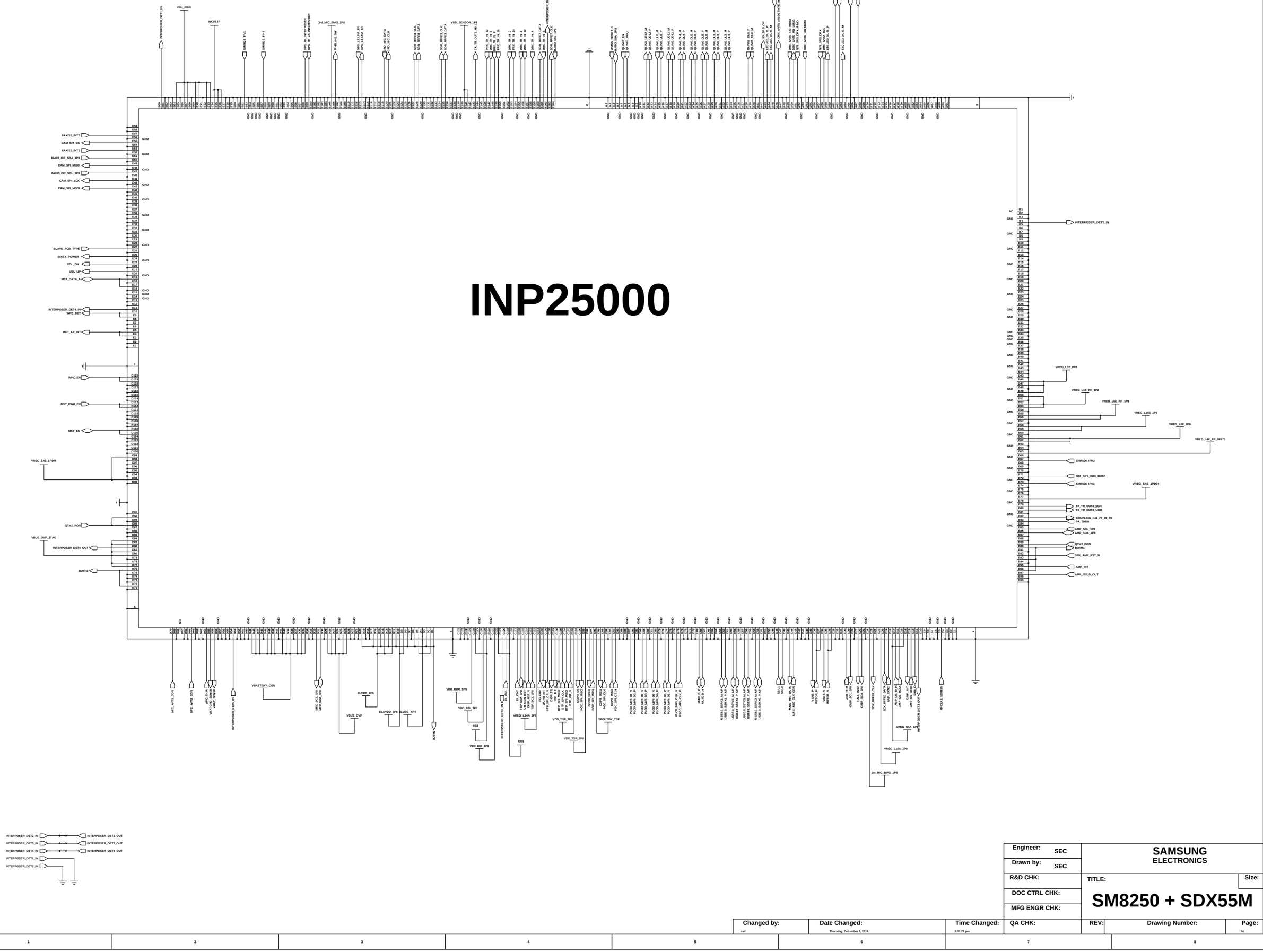

Changed by: cad	Date Changed: Thursday, December 1, 2016	Time Changed: 3:17:21 pm	QA CHK:	REV:	Drawing Number:	Page: 14

Engineer: SEC	SAMSUNG ELECTRONICS
Drawn by: SEC	
R&D CHK:	TITLE: SM8250 + SDX55M
DOC CTRL CHK:	Size:
MFG ENGR CHK:	

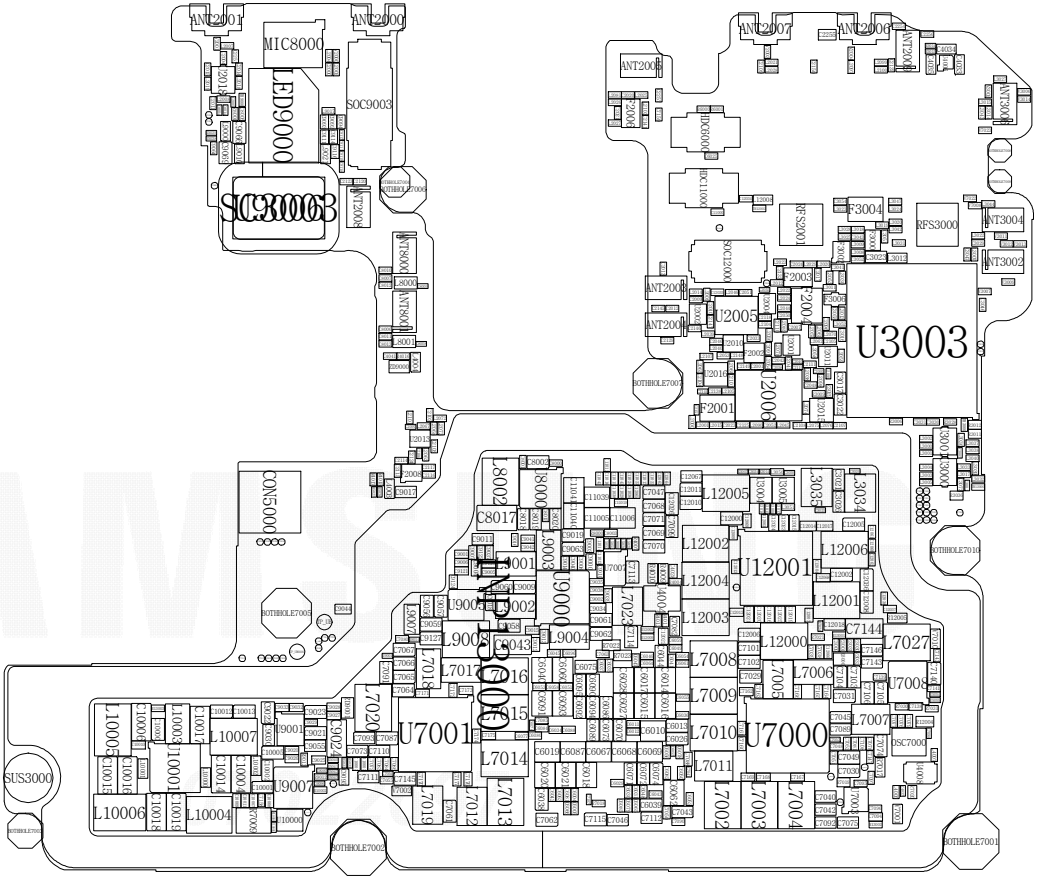

ANT2001
ANT2000
MIC8000
LED9000
SOC9003
SC3000
ANT2008
BOTHHOLE7006
ANT8000
L8000
ANT8001
L8001
ANT2007
ANT2006
ANT2005
ANT2004
ANT3000
F2006
DDC6000
DDC11000
RFS2001
F3004
RFS3000
ANT3004
ANT3002
SOC12000
F2003
F2004
ANT2003
ANT2002
U2005
U3003
BOTHHOLE7007
U2006
F2001
I2013
I2008
C9017
CON5000
BOTHHOLE7005
L8002
U8000
C8017
L9003
L9001
U9000
U9003
L9002
L9008
C9043
L9004
L7023
L12005
L12002
L12004
L12003
U12001
L12006
L12001
L12000
L3035
L3034
L3001
L3000
BOTHHOLE7010
C7144
L7027
L7008
L7006
L7005
U7008
L7009
L7007
DSC7000
L7010
U7000
L7011
L7014
L7016
L7017
L7018
L7015
U7001
L7020
L7019
L7012
L7013
L7002
L7003
L7004
L10005
L10006
L10007
L10004
U9001
U9007
C9024
SUS3000
BOTHHOLE7002
BOTHHOLE7001

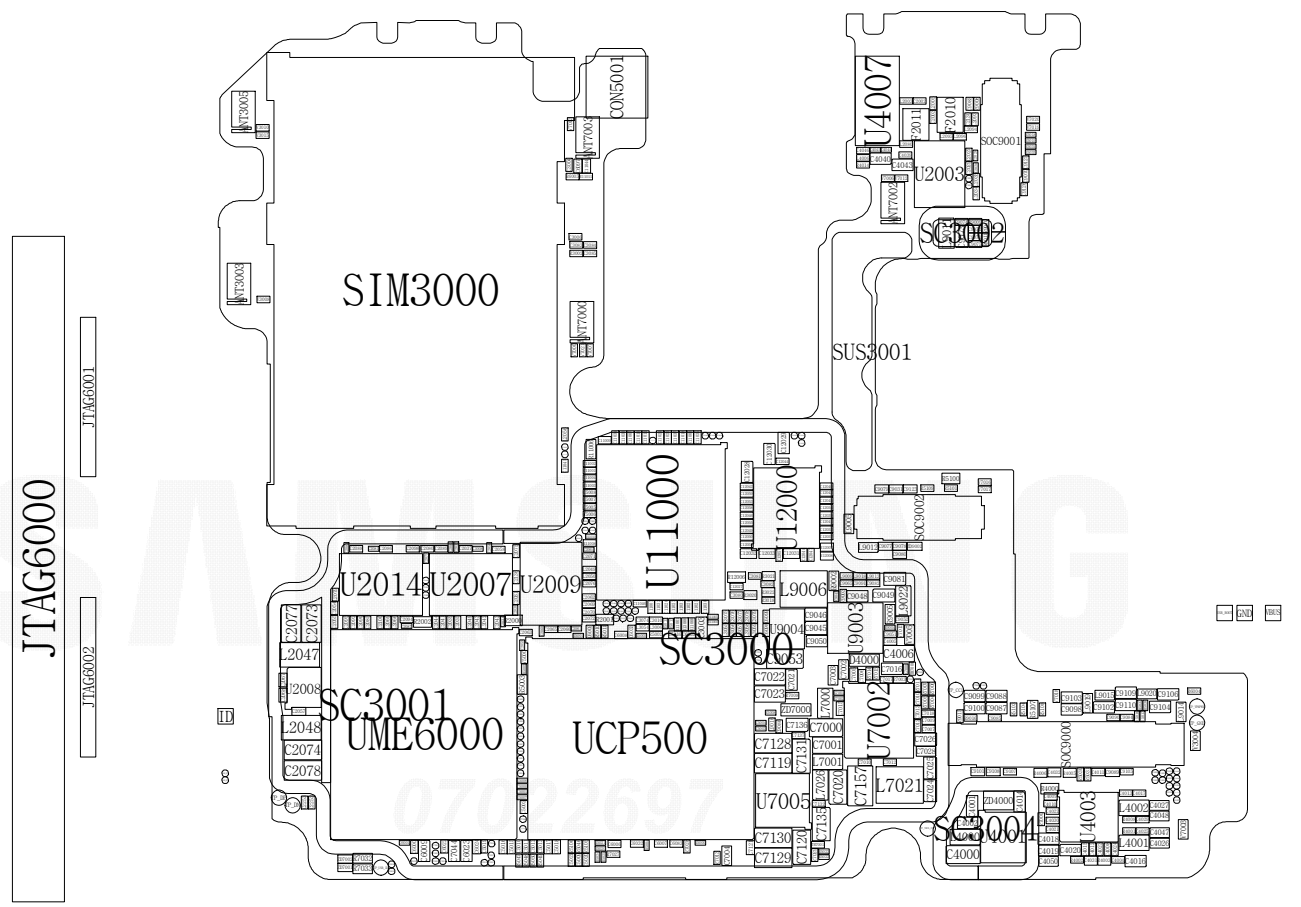
JTAG6000
JTAG6001
JTAG6002
SIM3000
CON5001
NT3005
NT3003
NT7003
NT7000
U4007
F2011
F2010
SOC9001
U2003
NT7002
SUS3001
U11000
U12000
SOC9002
U2014
U2007
U2009
L9006
U9004
U9003
SC3000
SC3001
UME6000
UCP500
U7002
U7005
L7021
SOC9000
U4003
SC9004
C4000
L2047
L2048
C2074
C2078
C2077
C2073
C7022
C7023
C7128
C7119
C7130
C7129
C7000
C7001
C7157
C4006
ZD4000
L4002
L4001
GND
BGS
ID

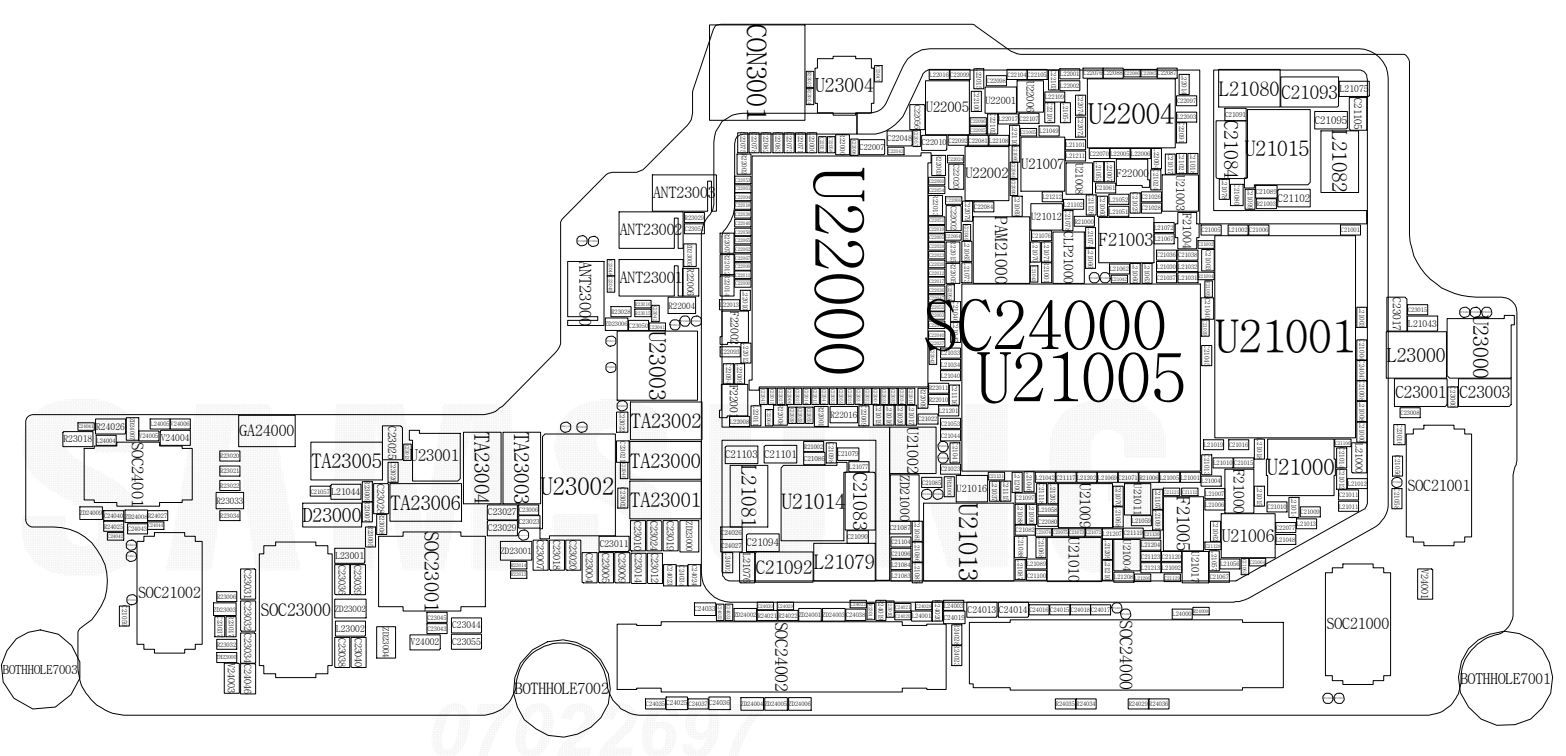
CON30001
U23004
U22004
U22000
SC24000
U21005
U21001
L21080
C21093
C21084
U21015
C21082
C21102
U21007
F22000
F21003
PAM21000
L21000
U21012
ANT23008
ANT23002
ANT23001
ANT23000
U23003
TA23002
TA23000
TA23001
U23002
TA23004
TA23003
TA23005
U23001
TA23006
D23000
GA24000
SOC24001
SOC21002
SOC23000
SOC23001
L23001
ZD23002
L23002
Y24002
C23044
C23055
C24026
C23018
Y24004
C21044
C23027
C23029
ZD23001
C23011
C23012
C23013
C23014
C23015
C23016
C23017
C23018
C23019
C23020
C23021
C23022
C23023
C23024
C23025
C23026
C23028
C23030
C23031
C23032
C23033
C23034
C23035
C23036
C23037
C23038
C23039
C23040
C23041
C23042
C23043
C23045
C23046
C23047
C23048
C23049
C23050
C23051
C23052
C23053
C23054
C23056
C23057
C23058
C23059
C23060
C23061
C23062
C23063
C23064
C23065
C23066
C23067
C23068
C23069
C23070
C23071
C23072
C23073
C23074
C23075
C23076
C23077
C23078
C23079
C23080
C23081
C23082
C23083
C23084
C23085
C23086
C23087
C23088
C23089
C23090
C23091
C23092
C23093
C23094
C23095