该文档是极速PDF编辑器生成
如果想去掉该提示,请访问并下载:
http://www.jisupdfeditor.com/

Note 3-1:	C104
MT6735	NC
MT6735M	NC
MT6735P	NC
MT6737	NC
MT6737M	NC
MT6737T	NC
MT6753	47uF
MT6753T	47uF

C / 47 / uF / 0805 can be replaced by 2pcs C / 22 / uF / 0603

C159 close to AVDD18_MEMPLL(E1 ball) & DVDD18_MC1(F3 ball) and keep trace length < 150mils

FSOURCE_P(EFUSE)
(1)FSOURCE_P EFUSE power(VEFUSE) should be only for EFUSE usage(not share with other application)
(2)W/I EFUSE program, VEFUSE need 1uF bypass cap (pls refer to ¡§LDO output voltage/current table¡¨)
(3)W/O EFUSE program, VEFUSE bypass cap should be NC.

DRAWN: Longbaicheng	DATED: 2020-11-13	COMPANY: OPPO	
CHECKED: <Checked By>	DATED: <Checked Date>	TITLE: Realme4	
QUALITY CONTROL: <QC By>	DATED: <QC Date>	CODE: <Code>	SIZE: D
RELEASED: <Released By>	DATED: NA	DRAWING NO: <Drawing Number>	REV: V1.0
		SCALE: <Scale>	SHEET: 1 OF 18

该文档是极速PDF编辑器生成
如果想去掉该提示,请访问并下载:
http://www.jisupdfeditor.com/

LTR	ECO NO:	APPROVED:	DATE:

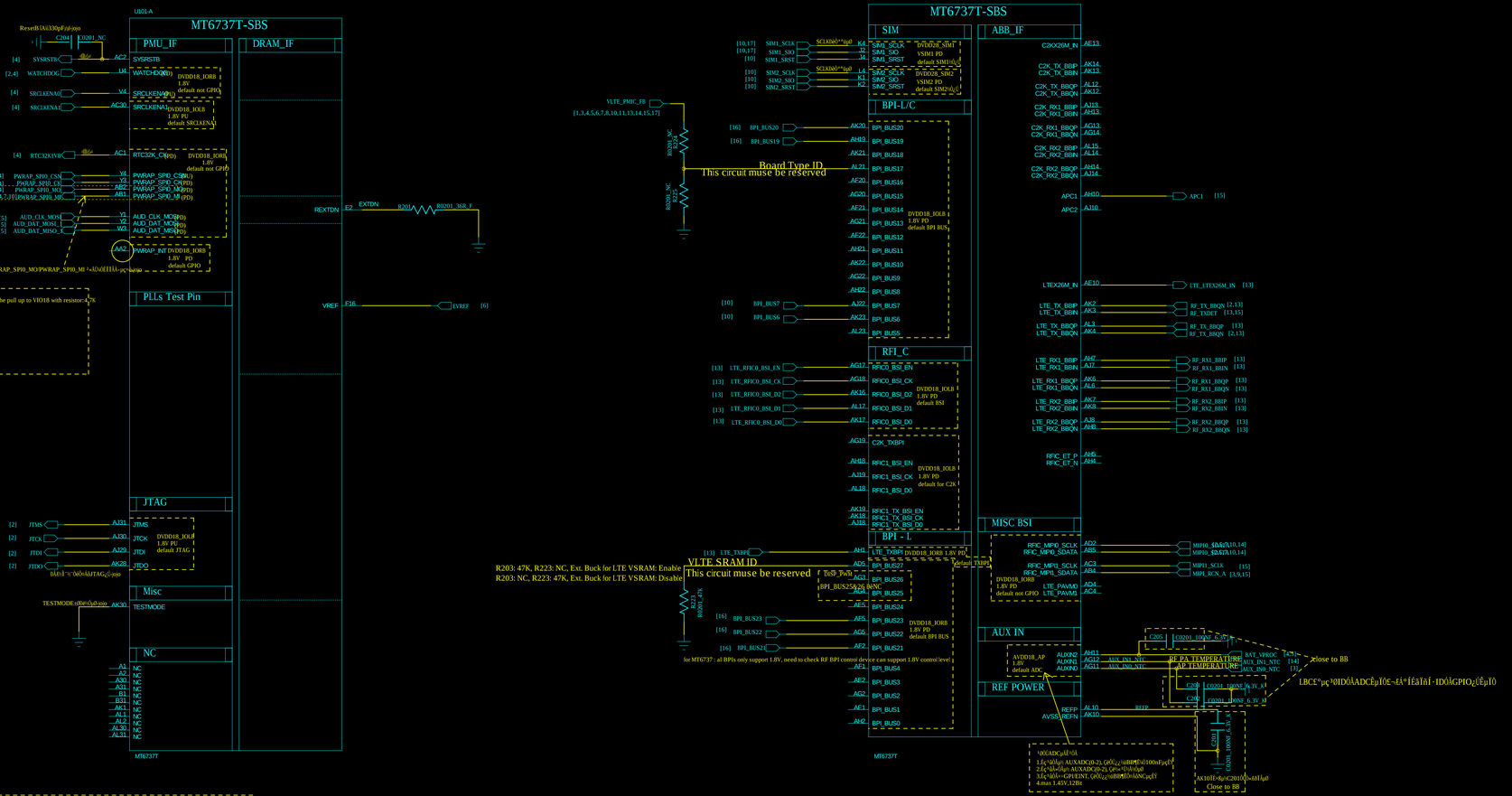

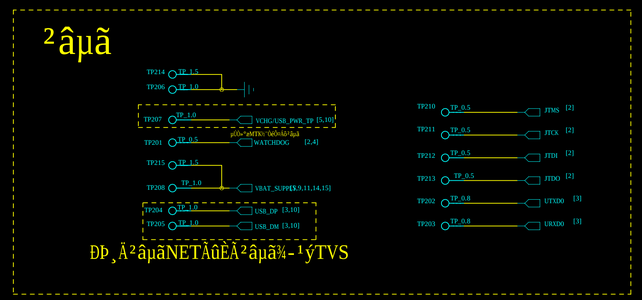

COMPANY:	OPPO
TITLE:	Realme4
DRAWN: Longbaicheng	DATED: 2020-11-13
CHECKED: <Checked By>	DATED: <Checked Date>
QUALITY CONTROL: <QC By>	DATED: <QC Date>
RELEASED: <Released By>	DATED: NA

CODE:	SIZE:	DRAWING NO:	REV:
<Code>	D	<Drawing Number>	V1.0

SCALE: <Scale> SHEET: 2 OF 18

该文档是极速PDF编辑器生成
如果想去掉该提示,请访问并下载:
http://www.jisupdfeditor.com/

ITEM	QTY	DESCRIPTION	
LTR		ECO NO:	APPROVED: DATE:

U101-G

MT6737T-SBS

EMI_IF

VDD3

VDD2

VD00	A12	RDQ0	D3	RCS_B	R4
VD01	C10	RDQ1	D6	RCS1_B	R5
VD02	B12	RDQ2	D7		
VD03	C11	RDQ3	D8	RCKE	P4
VD04	B13	RDQ4	D2		
VD05	D10	RDQ5	D1	RDQM0	D14
VD06	A14	RDQ6	D4	RDQM1	C14
VD07	A15	RDQ7	D5	RDQM2	D5
VD08	B15	RDQ8	D10	RDQM3	C6
VD09	B16	RDQ9	D9		
VD010	B17	RDQ10	D11	RDQS0	F15
VD011	D17	RDQ11	D14	RDQS1	F12
VD012	C18	RDQ12	D13	RDQS2	F10
VD013	A17	RDQ13	D15	RDQS3	F20
VD014	A18	RDQ14	D16		
VD015	A19	RDQ15	D12	RDQS0_B	F15
VD016	A9	RDQ16	D16	RDQS1_B	F12
VD017	A8	RDQ17	D23	RDQS2_B	F10
VD018	B8	RDQ18	D19	RDQS3_B	F20
VD019	B11	RDQ19	D21		
VD020	B10	RDQ20	D18	RCLK0	F9
VD021	C7	RDQ21	D17	RCLK0_B	F8
VD022	A11	RDQ22	D22		
VD023	D9	RDQ23	D20		
VD024	D20	RDQ24	D30		
VD025	B19	RDQ25	D25		
VD026	D21	RDQ26	D28		
VD027	A20	RDQ27	D24		
VD028	B20	RDQ28	D26		
VD029	B21	RDQ29	D27		
VD030	B7	RDQ30	D31		
VD031	A21	RDQ31	D29		

DDR2

	DDR2		
	RFU	D6	CA0
	RFU	R6	CA1
	RA3	R7	CA2
	RA2	A6	CA3
CA0	RA1	A5	CA4
CA3	RA0	D2	CA5
	RA9	C1	CA6
	RA8	C2	CA7
	RA7	R2	CA8
	RA6	R1	CA9

MT6737T

U101-C

MT6737T-SBS

CSI

[9] MIPI_RCP	P28	RCP			
[9] MIPI_RCN	N28	RCN			
[9] MIPI_RDP0	N29	RDP0	AVDD18_MIPIRX0		
[9] MIPI_RDN0	P29	RDN0			
[9] MIPI_RDP1	P30	RDP1			
[9] MIPI_RDN1	P31	RDN1		1.8V	
[9] MIPI_RDP2	T30	RDP2		default MIPIRX口	
[9] MIPI_RDN2	R30	RDN2			
[9] MIPI_RDP3	T31	RDP3			
[9] MIPI_RDN3	R31	RDN3			
[9] MIPI_RCP_A	T28	RCP_A			
[2,9,15] MIPI_RCN_A	R28	RCN_A			
[9] MIPI_RDP0_A	T29	RDP0_A			
[9] MIPI_RDN0_A	R29	RDN0_A			
[9] MIPI_RDP1_A	V30	RDP1_A	AVDD18_MIPIRX1		
[9] MIPI_RDN1_A	U30	RDN1_A		1.8V	
	V29	RDP2_A		default MIPI口	
	U29	RDN2_A			
	V28	RDP3_A			
	U28	RDN3_A			

DSI

	N2	TCP	MIPI_TCP	[8]	
	N1	TCN	MIPI_TCN	[8]	
	R2	TDP0	MIPI_TDP0	[8]	
	P2	TDN0	MIPI_TDN0	[3,8]	
AVDD18_MIPITX	R3	TDP1	MIPI_TDP1	[8]	
1.8V	P3	TDN1	MIPI_TDN1	[8]	
default MIPI口	N3	TDP2	MIPI_TDP2	[8]	
	M3	TDN2	MIPI_TDN2	[8]	
	M1	TDP3	MIPI_TDP3	[8]	
	M2	TDN3	MIPI_TDN0	[3,8]	

VRT

R1 MIPI_VRT MIPIVRT口φ1.5K_1%-ψφ

R309 RES0R_1.5K_F

DVDD18_IOLB 1.8V PD (DISP_PWM/PWM1) default GPIO

LCM口RST口φPWM口φSPI_PWM

DVDD18_IOLB 1.8V PD default GPIO

LCM_RST

DSI_TE

	AH1	LCD_PWM	[8]		
	W4	LCM_RST	[8]		
	AA5	DSI_TE	[8]		

CMDAT

[9]MAIN_CAM_ID	W29	CMDAT0	DVDD18_IOLB 1.8V PD default GPIO		
	W28	CMDAT1			
[9] GPIO_CAMERA_RESET	P9(30)	GPIO_RST			
[9] CMMCLK	Y27	CMMCLK	DVDD18_IOLB 1.8V PD default CMMCLK		
	Y28	CMMCLK_1			

Note: 3-1

SPI

[11] EINT_ALPS	AH28	SPI_CS			
[11] EINT_G	AH29	SPI_CK	DVDD18_IOLB 1.8V PD default GPIO		
[7] AUD4O_PA_EN	AG30	SPI_MO			
[9] CAM_PWR_EN	AK30	SPI_MI			

I2S

[9] GPIO_CMFLASHLED_EN	AK26	I2S_BCK(PWM4)	DVDD18_IOLB 1.8V PD default GPIO		
[12] GPIO_GPS_LNA_EN	AL27	I2S_LRCK(PWM3)			
[9] PWM0_TORCH_EN	AK27	I2S_DATA_IN(PWM0)			

MT6737T

Note 3-1:	CMMCLK1 Function
MT6735	¡Â
MT6735M	X
MT6735P	X
MT6737	X
MT6737M	X
MT6737T	¡Â
MT6753	¡Â
MT6753T	¡Â

U101-O

MT6737T-SBS

USB

[2,10] USB_DP	L2	USB_DP			
[2,10] USB_DM	V2	USB_DM			
	V1	USB_VRT	USB_VRT_PU		

USB_VRT_PU φ¶5.1K 1%-ψφ ¶¢ø_ÉÎÁÐÌ^1^1_ÆÎÁÐÌ^1

R310 RES1_5.1K_F

BC

[5] CHD_DP	T3	CHD_DP			
[5] CHD_DM	T4	CHD_DM			

KEYPAD

[5] GPIO_CHG_EN	AG23	KPROW0	DVDD18_IOLB 1.8V PD default GPIO		
	A323	KPROW1			
	AH23	KPROW2			
		KPCOL0	DVDD18_IOLB 1.8V PD default KROW0		
[10] KPCOL1	AC24	KPCOL1			
[10] KPCOL2	AC23	KPCOL2	DVDD18_IOLB 1.8V PD default GPIO		
	AL24	KPCOL3			
		KPCOL4	DVDD18_IOLB 1.8V PD default KCOL0		

I2C

	AA30	SCL0	DVDD18_IOLB 1.8V No Pull default GPIO		
[9] SCL0	Y30	SDA0			
[4,5,9] VCHT	R304	R0201_2.2K			
	R305	R0201_2.2K			
CAM					
[9] SDA0	R308	R0201_2.2K			
YLTE_PMIC_FB					
[1,2,3,4,5,6,7,8,10,11,13,14,15,17]	R309	R0201_2.2K			
	AB31	SCL1	DVDD18_IOLB 1.8V No Pull default I2C		
[3,5,8,11,13]SCL1	AB30	SDA1			
[5,8] SDA1	CTPC-ÁÎÁÐ_*Æ×ÐÌ¢-				
YLTE_PMIC_FB	R307	R0201_4.7K			
[1,2,3,4,5,6,7,8,10,11,13,14,15,17]	R306	R0201_4.7K			
[3,5,8,11]SCL2	AA28	SCL2	DVDD18_IOLB 1.8V No Pull default GPIO		
[11,17] SDA2	AB29	SDA2			
Sensor	AB27	SCL3			
	AC27	SDA3			

UART

[2] UTXD0	A325	UTXD0	DVDD18_IOLB 1.8V PU default UART0		
[2] URXD0	A327	URXD0			
	AG27	UTXD1	DVDD18_IOLB 1.8V PD default GPIO		
	AH27	URXD1			
	AD30	UTXD2			
	AE30	URXD2			
	AE32	UTXD3(PWM4)			
[9] CAM_PDN0	AE31	URXD3(PWM1)			

WCN 6625

[12] GPS_RX_IP	E30	GPS_RXIP	AVDD18_WBG		
[12] GPS_RX_IN	D30	GPS_RXIN			
[12] GPS_RX_QP	C31	GPS_RXQP	VCN18_PMU		
[12] GPS_RX_QN	C32	GPS_RXQN	default GPS IQ		
[12] F2W_CLK	D28	F2W_CLK	DVDD18_CONN 1.8V PD default not GPIO		
[7,12] FM_RX_N	D27	F2W_DATA			
[12] WB_RX_IP	K30	WB_RXIP	AVDD18_WBG		
[12] WB_RX_IN	J30	WB_RXIN			
[12] WB_RX_QP	J31	WB_RXQP	VCN18_PMU		
[12] WB_RX_QN	H31	WB_RXQN	default WB IQ		
[12] WB_TX_IP	H30	WB_TXIP			
[12] WB_TX_IN	G31	WB_TXIN			
[12] WB_TX_QP	F30	WB_TXQP			
[12] WB_TX_QN	F31	WB_TXQN			

MSDCs

	D26	MSDC0_RSTB		[6]	
MSDC0_CMD	B24	MSDC0_CMD		[6]	
MSDC0_CLK	C23	MSDC0_CLK		[6]	
MSDC0_DSL	E23	MSDC0_DSL		[6]	
DVDD18_MC0	D25	MSDC0_DAT7		[6]	
PU	D23	MSDC0_DAT6		[6]	
default MSDC0	A24	MSDC0_DAT5		[6]	
	A23	MSDC0_DAT4		[6]	
	E23	MSDC0_DAT3		[6]	
	B25	MSDC0_DAT2		[6]	
	B26	MSDC0_DAT1		[6]	
	A26	MSDC0_DAT0		[6]	
(PWM5)MSDC1_CLK	H1	MSDC1_CLK		[10]	
MSDC1_CMD	F2	MSDC1_CMD		[10]	
DVDD28_MC1	G2	MSDC1_DAT3		[10]	
VMC	H2	MSDC1_DAT2		[10]	
default MSDC1	J4	MSDC1_DAT1		[10]	
	G4	MSDC1_DAT0		[10]	
MSDC2_CLK	L29				
MSDC2_CMD	K28				
DVDD28_MC2	M30				
1.8V PD	M31				
default GPIO	L27				
	M27				

Note: 3-2

Note 3-2: MSDC2 Pin should be NC (No Connection) for MT6735M&MT6735P

CONN_IF

	F26	WB_CTRL0		[12]	
	G29	WB_CTRL1		[12]	
DVDD18_IOLT	G28	WB_CTRL2		[12]	
1.8V PD	H29	WB_CTRL3		[12]	
default not GPIO	H28	WB_CTRL4		[12]	
	J29	WB_CTRL5		[12]	
DVDD18_CONN	B27	WB_SCLK		[12]	
1.8V PD	B28	WB_SDATA		[12]	
default not GPIO	A29	WB_SEN		[12]	
	E27	XIN_WBG	CONN_XO_IN	[12]	
DVDD18_CONN	B29	WB_RSTB	WB_RSTB	[12]	
1.8V PD					
default not GPIO	J26	ANT_SEL0			
DVDD18_IOLT	M28	ANT_SEL1			
1.8V PD	L26	ANT_SEL2			
default GPIO					

PCM (ext MD)

	AE27	PCM_CLK			
DVDD18_IOLB 1.8V PD default GPIO	AD29	PCM_SYNC			
	AD28	PCM_TX			
	AD27	PCM_RX			

GPIO

	AC31	SRCLKENAI	SRCLKENAI	[17]	
(PWM3)	AF28	EINT0	SUB_PWM3_TORCH_EN	[9]	
(PWM2)	AE29	EINT1	EINT_NFC		
	AF27	EINT2	NFC_IRQ	[17]	
	AF30	EINT3	NFC_RST		EINT_CHG_STAT[5]
	AF31	EINT4	NFC_VEN	[17]	
DVDD18_IOLB 1.8V PD default GPIO	AL25	EINT5	INT_SD	[10]	
	AK29	EINT6	EINT_EAR	[7]	
	A326	EINT7	SUB_CAM_ID	[9]	
	T4(5)	EINT8	INT_SIM1	[10]	
	AG26	EINT9	INT_SIM2	[10]	
(PWM1)	AK25	EINT10	EINT_CTP	[8]	
	AG25	EINT11	CAM_PDN1	[3,9]	
	AK25	EINT12	CAM_PDN1	[3,9]	

SIM HOT PLUG

SIM HOT PLUG

MT6737T

PCBÎÂ¶È¼ì²â

VLTE_PMIC_FB

[1,2,3,4,5,6,7,8,10,11,13,14,15,17]

R300 RES47K_F

[2] AUX_IN0_NTC

NTC 100K

NTC与AP 5-8mm£¬Î¬Ê±±¡¿*ÈâÊü¬¢ÊÊ£¬ìþÊ¨PMIC,Charger,WIFIµÈ£¨15mmÒÔÊÏ

SET	Controller	Ref.Design	Note
I2C0	AP	Rear Camera w AF Front Camera w/o AF	1.Open drain Type 2.PU to Camera's power supply
I2C1	AP	CTP/SW Charger LCM gate driver	1.Open drain Type
I2C2	AP	MEMS sensor/NFC Flashlight Driver MHL/Front Camera w AF	1.Open drain Type
I2C3	AP	reserved for future use	1.Open drain Type

Set	Function	Power Domain	Note
MSDC0	eMMC	DVDD18_MC0	1.Dedicated pin for eMMC 2.Independent power domain
MSDC1	T-Card	DVDD28_MC1	1.Dedicated pin for T-Card 2.Independent power domain
MSDC2	MT6630	DVDD28_MC2	1.1.8V for SDIO3.0

COMPANY:	OPPO		
TITLE:	Realme4		
DRAWN: Longbaicheng	DATED: 2020-11-13		
CHECKED: <Checked By>	DATED: <Checked Date>		
QUALITY CONTROL: <QC By>	DATED: <QC Date>		
RELEASED: <Released By>	DATED: NA		
CODE: <Code>	SIZE: D	DRAWING NO: <Drawing Number>	REV: V1.0
SCALE: <Scale>	SHEET: 3 OF 18		

该文档是极速PDF编辑器生成
如果想去掉该提示,请访问并下载:
http://www.jisupdfeditor.com/

LTR	ECO NO:	APPROVED:	DATE:	

VPROC>VCORE>VLTE>VSYS>VPA

0èMTKÉ·ÊÍ37'TÆ½Ì¯µç¸ÐÑ¡ÐÍ¿ÉÖÓÍ¬>Ì¡35µäÑ¡ÐÍÉ-¼¿Ç°Í¬÷½AL808-LBC

UVLO_VTH
U1::w/o charger,U2:w/I charger
U1:2.9V,U2:2.7V:<110Kohm
U1:3.0V,U2:2.8V:185Kohm-270Kohm(default 200K)
U1:3.1V,U2:2.9V:460Kohm-560Kohm
U1:3.2V,U2:3.0V:0.925Mohm-1.11Mohm
U1:3.3V,U2:3.1V:1.84Mohm-2.75Mohm
U1:3.4V,U2:3.2V:>4.7Mohm

MT6735 Core Powers	PMIC Power source	Buck/LDO	Min. Voltage	Max. Voltage
VPROC(DVDD_CPU)	MT6328's VPROC	Buck	0.85	1.265
VCORE(DVDD_CORE)	MT6328's VCORE	Buck	0.85	1.265
VLTE(DVDD_LTE)	MT6328's VLTE	Buck	0.85	1.155
VM(DVDD_EMI)	MT6328's VM	LDO	1.14	1.300
VSRAM(DVDD_SRAM)	MT6328's VSRAM	LDO	0.85	1.310
LTE_VSRAM_EXT(VLTE_SRAM)	External Buck:LTE_VSRAM_EXT	Buck	0.85	1.150

BUCK	Output Voltage(V)	Output Current(mA)	Supply
VPROC	1.15V[0.6V-1.31V]6.25mV	5000	CPU Processor
VCORE	1.15V[0.6V-1.31V]6.25mV	3500	GPU+Soc
VLTE	1.05V[0.6V-1.31V]6.25mV	2800	LTE Core
VSYS	2V	1900	System Power
VPA	3.4V(0.5V-3.4V)	600	MT6169 PA

LDO	Output Voltage(V)	Output Current(mA)	Supply
VTCXO0	2.8	40	MT6169 TCXO
VTCXO1	2.8	40	MT6158 TCXO
VCN33	3.3	350	MT6625L 3.3V
VCN28	2.8	40	MT6625L 2.8V
VAUX18	1.8V	40	AUXADC 1.8V
VAUD28	2.8(1.5/1.8/2.5/2.8)	40	Audio Power
VCAMA	2.8(1.2/1.3/1.5/1.8/2.0/2.8/3.0/3.3)	200	Camera Analog power
VMCH	2.9(2.9/3.0/3.3)	800	SD 3.0
VCAM_AF	2.8(1.2/1.3/1.5/1.8/2.0/2.8/3.0/3.3)	200	Camera AF power
VGP1	2.8(1.2/1.3/1.5/1.8/2.5/2.8/3.0/3.3)	200	CTP
VIO28	2.8	200	Sensor,IR LED
VIBR	2.8(1.2/1.3/1.5/1.8/2.0/2.8/3.0/3.3)	100	MOTO
VMC	2.9(1.8/2.9/3.0/3.3)	200	SD Card 3.0
VEFUSE	1.8(1.8/1.9/2.0/2.1/2.2)	200	Efuse
VEMC33	3.3(3.0/3.3)	400	EMMC 5.0 power
VUSB	3.3	20	USB 2.0
VSIM1	1.8(1.7/1.8/1.86/2.76/3.0/3.1)	50	SIM CARD 1
VSIM2	1.8(1.7/1.8/1.86/2.76/3.0/3.1)	50	SIM CARD 2
VRTC	2.8	2	RTC
DVDD18_DIG	1.8	20	
VCAMD	(0.9/1.0/1.1/1.22/1.3/1.5)	500	Camera Digital power

¼§Ìå·½°¸Ìù£¬ÅäÖÃ±í1/3 (Page4¡¢13¡¢16£©							
	MT6328 AuxADC			32K Crystal Component			
	C430	C414	B401	R404	C418	C419	X401
VCTXO+32K Exist	0R	1uF	0R	NC	22pF	22pF	32K
TSX+32K Exist	1nF	1uF	Bead	NC	22pF	22pF	32K
TSX+32K Less	1nF	1uF	Bead	0R	NC	0R	NC

DRAWN: Longbaicheng	DATED: 2020-11-13	COMPANY: OPPO			
CHECKED: <Checked By>	DATED: <Checked Date>	TITLE: Realme4			
QUALITY CONTROL: <QC By>	DATED: <QC Date>	CODE: <Code>	SIZE: D	DRAWING NO: <Drawing Number>	REV: V1.0
RELEASED: <Released By>	DATED: NA	SCALE: <Scale>	SHEET: 4 OF 18		

该文档是极速PDF编辑器生成
如果想去掉该提示,请访问并下载:
http://www.jisupdfeditor.com/

Audio

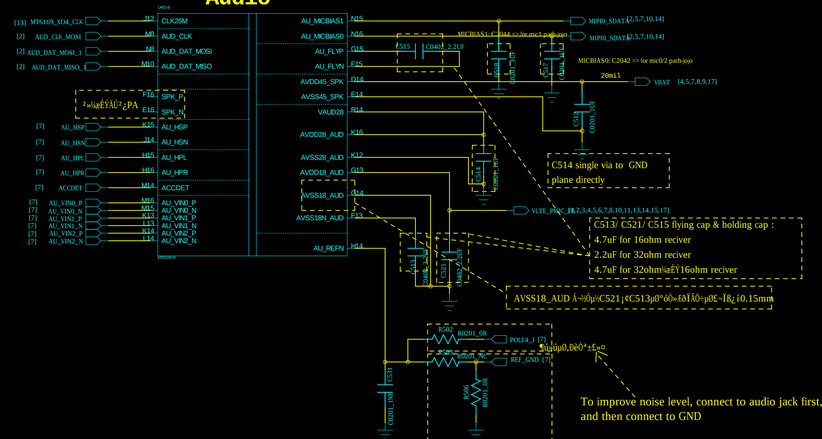

External Buck for DRAM

[Optional] for Low Power enhancement

NCP63248MTAATBG Pin6 is Power Good functionE-tie to Pull low is no power good function

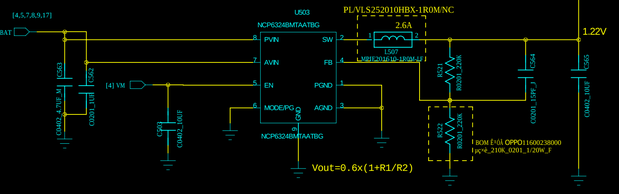

BAT CONNECTOR

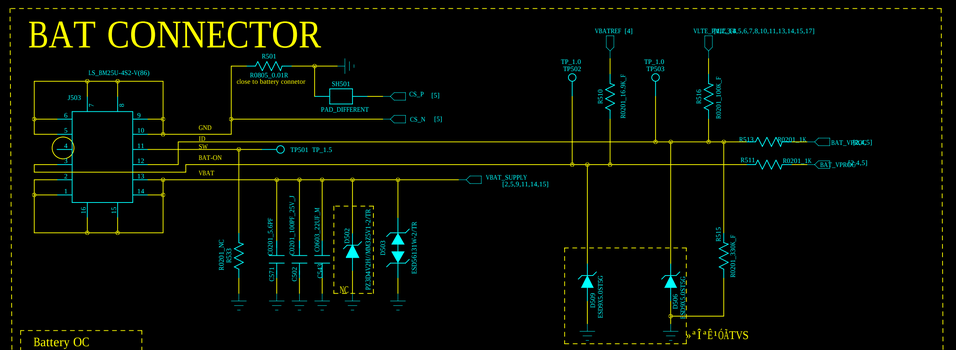

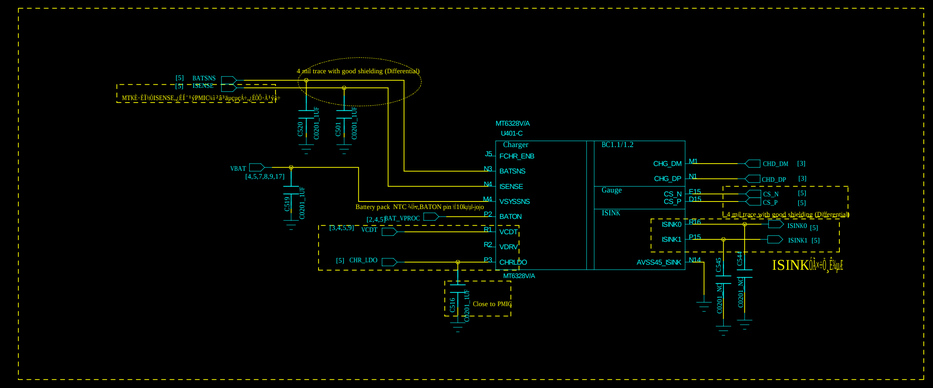

Switching Charger

BQ24196的I2C address 0x6BH (7bit)

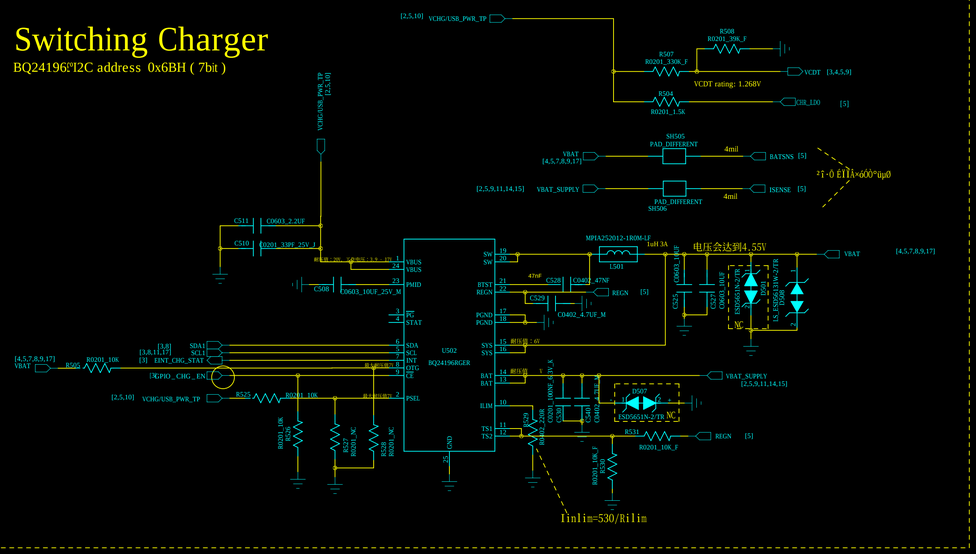

LED Indicator

COMPANY:	OPPO
TITLE:	Realme4
DRAWN: Longbaicheng	DATED: 2020-11-13
CHECKED: <Checked By>	DATED: <Checked Date>
QUALITY CONTROL: <QC By>	DATED: <QC Date>
RELEASED: <Released By>	DATED: N/A
CODE: <Code>	SIZE: D
DRAWING NO: <Drawing Number>	REV: V1.0
SCALE: <Scale>	SHEET: 5 OF 18

该文档是极速PDF编辑器生成
如果想去掉该提示,请访问并下载:
http://www.jisupdfeditor.com/

REVISION RECORD			
LTR	ECO NO:	APPROVED:	DATE:

eMMC+LPDDR3

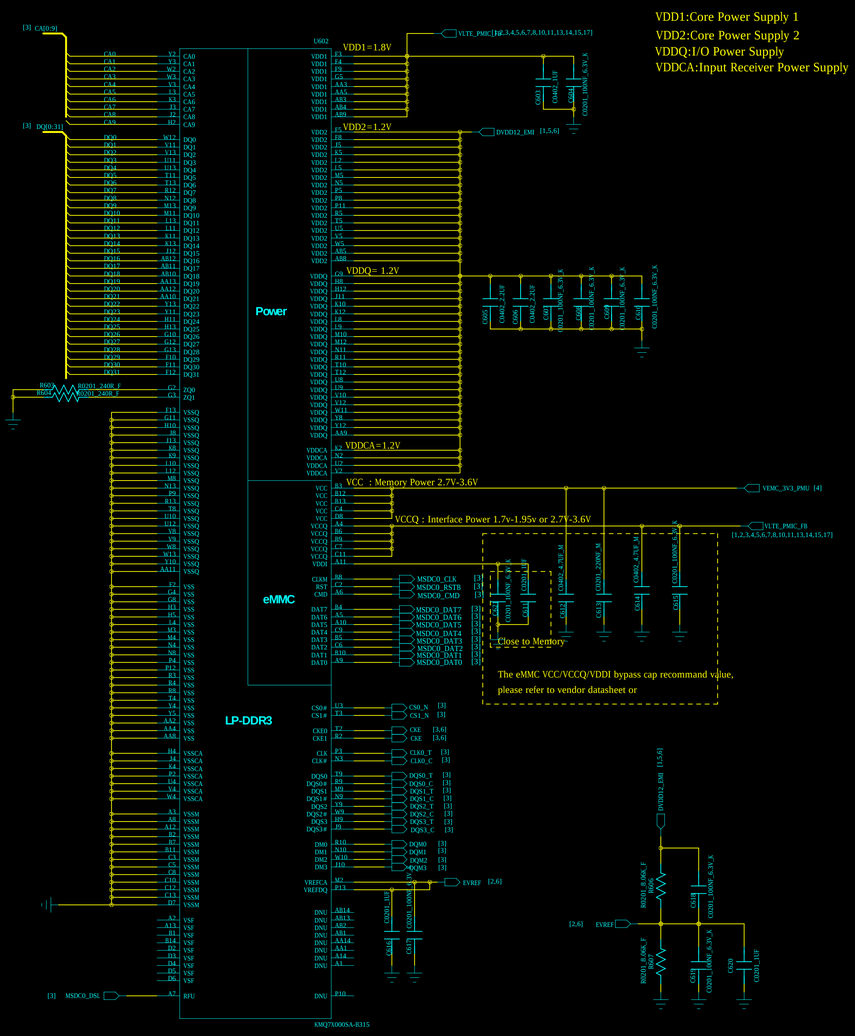

LPDDR3 FlashÐÅÏ¢»ã×Ü

221 Ball, 0.5mm pitch

È¥Á¿	ÐÍºÅ	³§¼Ò	³Ð´ç	È¨Ö¤Ç¿¿ö
16GB+2GB	KMQE10013M-B318007	SAMSUNG	1.0	È¨Ö¤OK
	H9TQ17ABJTACUR-KUM	HYNIX	1.0	Î´È¨Ö¤
	TYE0HH231659RA	TOSHIBA	1.0	È¨Ö¤OK

DRAWN: Longbaicheng	DATED: 2020-11-13	COMPANY: OPPO	
CHECKED: <Checked By>	DATED: <Checked Date>	TITLE: Realme4	
QUALITY CONTROL: <QC By>	DATED: <QC Date>	CODE: <Code>	SIZE: D
RELEASED: <Released By>	DATED: NA	DRAWING NO: <Drawing Number>	REV: V1.0
		SCALE: <Scale>	SHEET: 6 OF 18

该文档是极速PDF编辑器生成
如果想去掉该提示,请访问并下载:
http://www.jisupdfeditor.com/

REVISION RECORD			
LTR	ECO NO:	APPROVED:	DATE:

RECEIVER

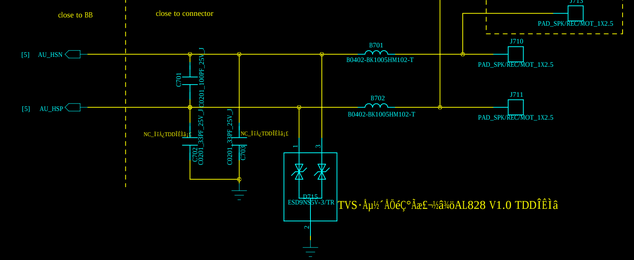

AUDIO PA

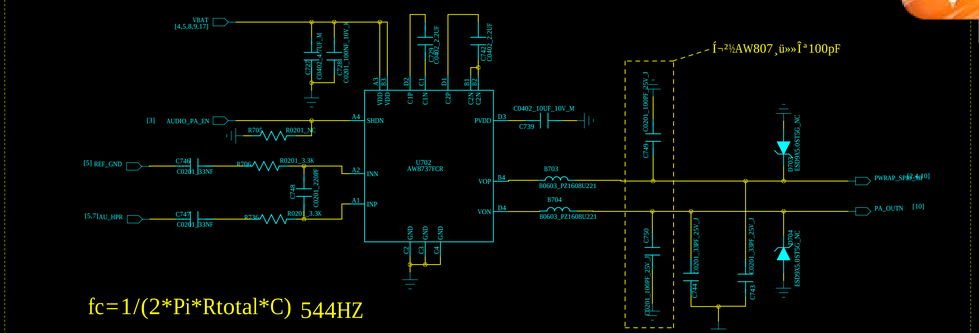

fc=1/(2*Pi*Rtotal*C) 544HZ

Av=320K/(Rin+16.5K)

MIC -- MAIN

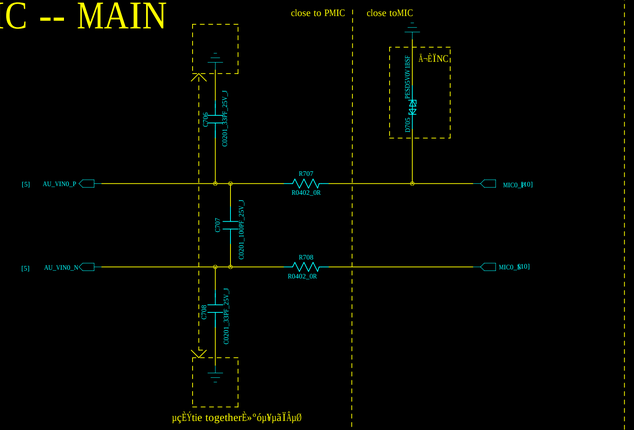

Earphone MICPHONE

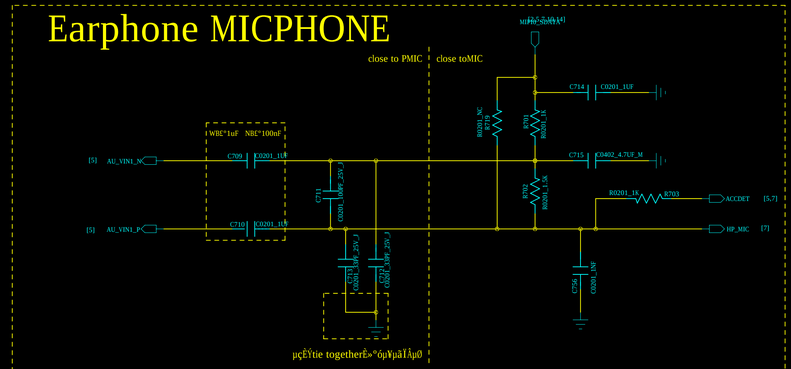

Mic mode setting									
Mode	C709	C710	R719	R701	R702	R703	C714	C715	f(: ôõ¾ºu¹¾
ACC	WBE*1uF NBE*100nF	WBE*1uF NBE*100nF	NC	1K	1.5K	1K	1uF	4.7uF	Y
DCC	0R	0R	NC	NC	NC	NC	NC	0R	N
DCC	0R	0R	2.5K	NC	NC	NC	NC	0R	Y

MIC -- Sub

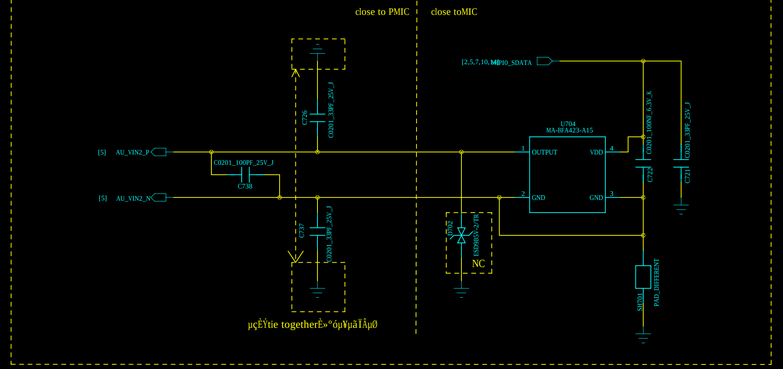

EAR_JACK

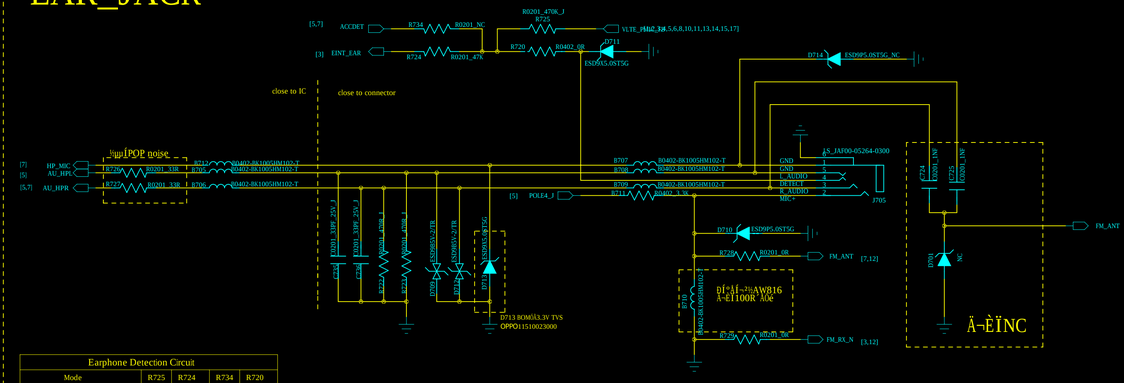

Earphone Detection Circuit				
Mode	R725	R724	R734	R720
Low Cost Mode	NC	NC	47K	NC
Traditonal Mode (ACC)	470K	47K	NC	0R

DRAWN: Longbaicheng	DATED: 2020-11-13	COMPANY: OPPO	
CHECKED: <Checked By>	DATED: <Checked Date>	TITLE: Realme4	
QUALITY CONTROL: <QC By>	DATED: <QC Date>	CODE: <Code>	SIZE: D
RELEASED: <Released By>	DATED: NA	DRAWING NO: <Drawing Number>	REV: V1.0
		SCALE: <Scale>	SHEET: 7 OF 18

该文档是极速PDF编辑器生成
如果想去掉该提示,请访问并下载:
http://www.jisupdfeditor.com/

LCM ÐÂ¿ª

LCD AND CTP INTERFACE

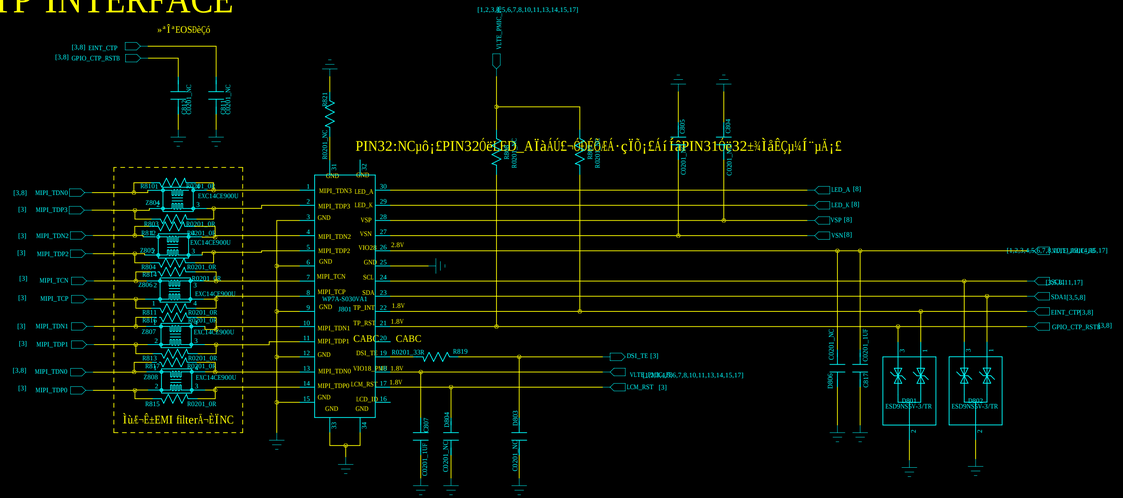

LCM Backlight LED Driver

from AL1518

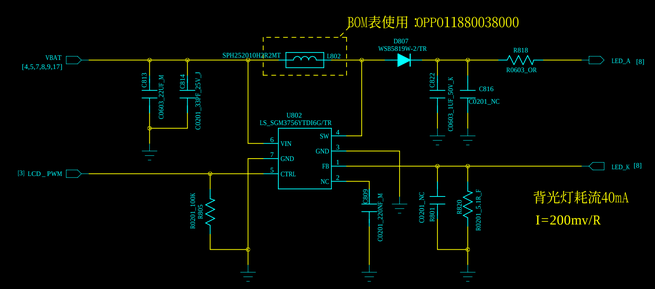

LCD +/-5V Driver

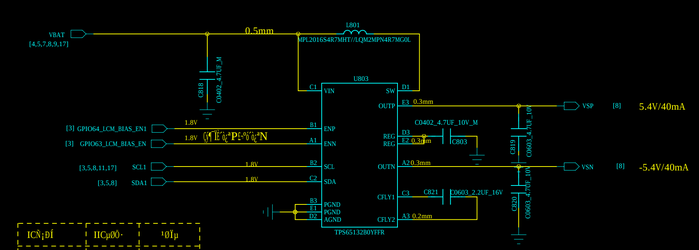

ICÑ¡ÐÍ	IICµØÖ·	¹ØÏµ
SM5106	0X3E	¶þ¹©
NT50358CG/J	0X3E	Ó¦¹©

DRAWN: Longbaicheng	DATED: 2020-11-13	COMPANY: OPPO			
CHECKED: <Checked By>	DATED: <Checked Date>	TITLE: Realme4			
QUALITY CONTROL: <QC By>	DATED: <QC Date>	CODE: <Code>	SIZE: D	DRAWING NO: <Drawing Number>	REV: V1.0
RELEASED: <Released By>	DATED: NA	SCALE: <Scale>		SHEET: 8 OF 18	

该文档是极速PDF编辑器生成
如果想去掉该提示,请访问并下载:
http://www.jisupdfeditor.com/

LTR	ECO NO:	APPROVED:	DATE:

Main CAMERA

8M¼æÈÝ13M

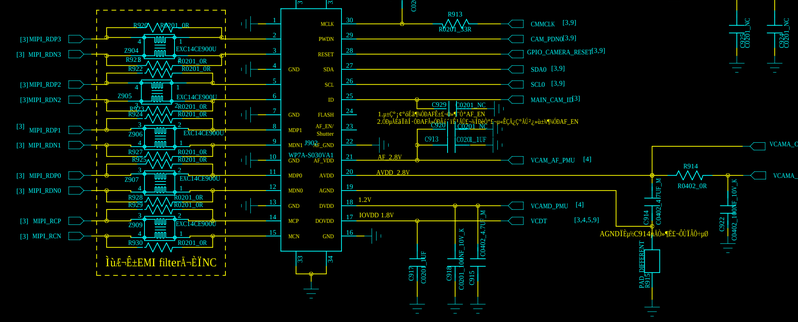
[3] MIPI_RDP3
[3] MIPI_RDN3
[3] MIPI_RDP2
[3] MIPI_RDN2
[3] MIPI_RDP1
[3] MIPI_RDN1
[3] MIPI_RDP0
[3] MIPI_RDN0
[3] MIPI_RCP
[3] MIPI_RCN
Z904
Z905
Z906
Z907
Z908
Z909
EXC14CE3900U
R0201_0R
ÌûÊ¬Ê±EMI filterÁ¬ÊÎNC
MCLK
PWDN
RESET
SDA
SCL
ID
FLASH
AF_SW/Shutter
AF_GND
AF_VDD
AVDD
AGND
DVDD
DOVDD
GND
MCN
MCP
MDP0
MDN0
MDP1
MDN1
MIPI_RCP
MIPI_RCN
MIPI_RDP0
MIPI_RDN0
MIPI_RDP1
MIPI_RDN1
MIPI_RDP2
MIPI_RDN2
MIPI_RDP3
MIPI_RDN3
CMMCLK [3,9]
CAM_PDN0 [3,9]
GPIO_CAMERA_RESET [3,9]
SDA0 [3,9]
SCL0 [3,9]
MAIN_CAM_ID [3]
VCAMA_OUT [9]
VCAM_AF_PMU [4]
AVDD_2.8V
VCAMD_PMU [4]
VCDT [3,4,5,5]
IOVDD 1.8V
1.2V
AF_2.8V
R914
R0402_0R
C913
C0220_1UF
C929
C0201_NC
C914
C0402_0.1UF
C915
C0402_0.1UF
C916
C0201_1.5PF
C917
C0201_1.5PF
C918
C0201_1.5PF
C919
C0201_1.5PF
C920
C0201_1.5PF
C921
C0201_1.5PF
C922
C0402_4.7UF_6.3V
C923
C0402_4.7UF_6.3V
C924
C0402_4.7UF_6.3V
L915
MCB2012U601SN
R915
R0201_0R
R916
R0201_0R
R917
R0201_0R
R918
R0201_0R
R919
R0201_0R
R920
R0201_0R
R921
R0201_0R
R922
R0201_0R
R923
R0201_0R
R924
R0201_0R
R925
R0201_0R
R926
R0201_0R
R927
R0201_0R
R928
R0402_0R
C900
C0201_1.5PF
C901
C0201_1.5PF
C902
C0201_1.5PF
C903
C0201_NC
C904
C0201_NC
C905
C0201_NC
C906
C0201_NC
C907
C0201_NC
C908
C0201_NC
C909
C0201_NC
C910
C0201_NC
C911
C0201_NC
C912
C0201_NC
C927
C0402_4.7UF_6.3V
C928
C0402_4.7UF_6.3V
C930
C0402_4.7UF_6.3V
C931
C0402_4.7UF_6.3V
C932
C0402_4.7UF_6.3V
C933
C0402_4.7UF_6.3V
C934
C0402_4.7UF_6.3V
C935
C0402_4.7UF_6.3V
C936
C0402_4.7UF_6.3V
C937
C0402_4.7UF_6.3V
C938
C0402_4.7UF_6.3V
C939
C0402_4.7UF_6.3V
C940
C0402_4.7UF_6.3V
C941
C0402_4.7UF_6.3V
C942
C0402_4.7UF_6.3V
C943
C0402_4.7UF_6.3V
C944
C0402_4.7UF_6.3V
C945
C0402_4.7UF_6.3V
C946
C0402_4.7UF_6.3V
C947
C0402_4.7UF_6.3V
C948
C0402_4.7UF_6.3V
C949
C0402_4.7UF_6.3V

该文档是极速PDF编辑器生成
如果想去掉该提示,请访问并下载:
http://www.jisupdfeditor.com/

LTR	ECO NO:	APPROVED:	DATE:

NANO_SIM1 & T_FLASH

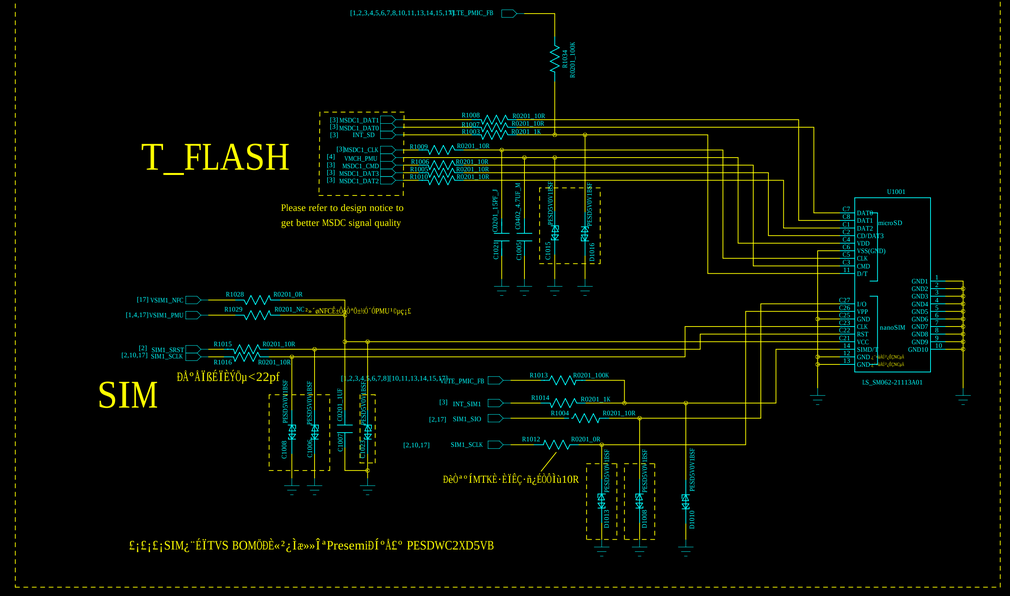

NANO SIM2

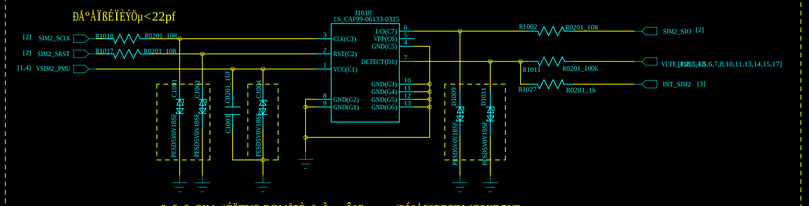

Schematic design notice of "40_MEMORY_SD Card" page.

Note 40-1:

The total equivalent capacitance of MSDC ESD protection device and de-sense bypass CAP must be <=10pF.
But for NFC app. equivalent capacitance of MSDC_NFC_SWPIO and MSDC_NFC_VCCSWP should <=0.5pF.

KEY

DO NOT put pull-up resistor on PWRKEY

¿ª»úÌõ¼ÛÅÄ½¨ÒéBÅ°ÅÉ-FPC×ÎÎßÉ±ÐÐÓ°À-Å½¡ô²ôÅ´£¬Ê»°ôÛÚPAD´¡Å-ÔÛÚ»ßð

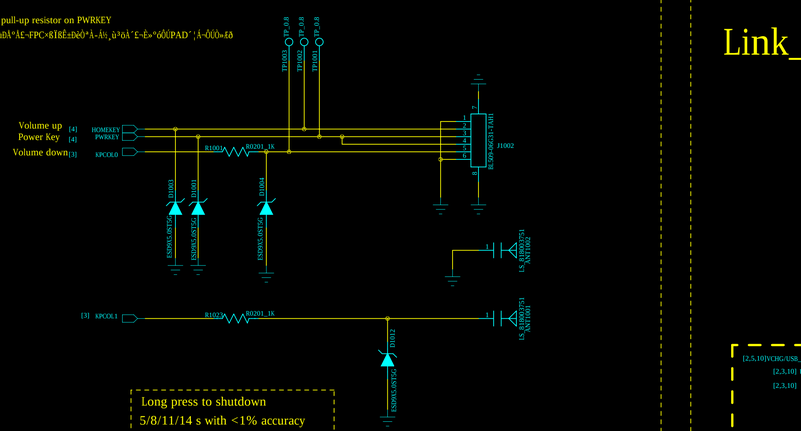

Link_FPC

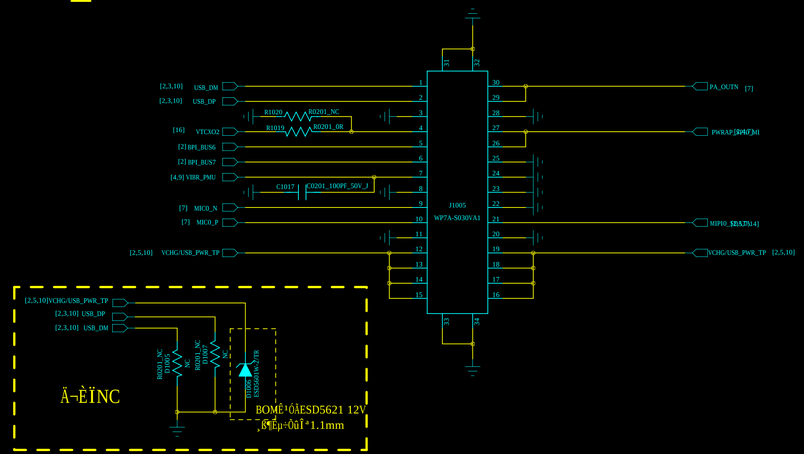

DRAWN: Longbaicheng	DATED: 2020-11-13		
CHECKED: <Checked By>	DATED: <Checked Date>		
QUALITY CONTROL: <QC By>	DATED: <QC Date>		
RELEASED: <Released By>	DATED: NA		

COMPANY: OPPO			
TITLE: Realme4			
CODE: <Code>	SIZE: D	DRAWING NO: <Drawing Number>	REV: V1.0
SCALE: <Scale>		SHEET: 10 OF 18	

该文档是极速PDF编辑器生成
如果想去掉该提示,请访问并下载:
http://www.jisupdfeditor.com/

REVISION RECORD			
LTR	ECO NO:	APPROVED:	DATE:

ALS&PS

Sensor	Address
AP3426-3.4T	0X1E

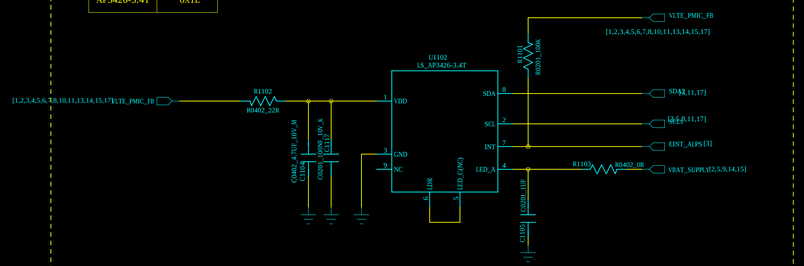

G-sensor I2C>0.7VDDIO=1.26V

BOMÑ¡ÐÍÊçÏÃ£º	
¶¨¹¤	BMA253£º I2C address 0X18
¶¨¹¤	MC3413-P: I2C address 0x4C and 0X6C

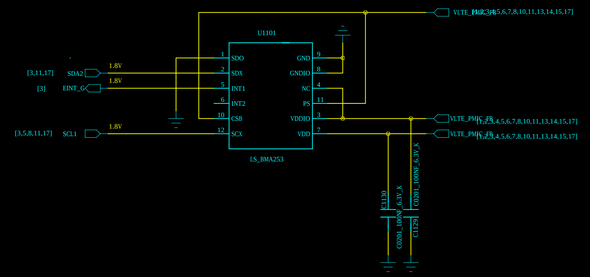

E-compass

CAD=0, AK09911C I2C address 0x0CH£7bit£
AK09916C I2C address 0x0CH (7bit)

E-compass	物料的匹配
AK09911C	U1104£
AK09916C £	U1103=NC C1103,C1106=NC

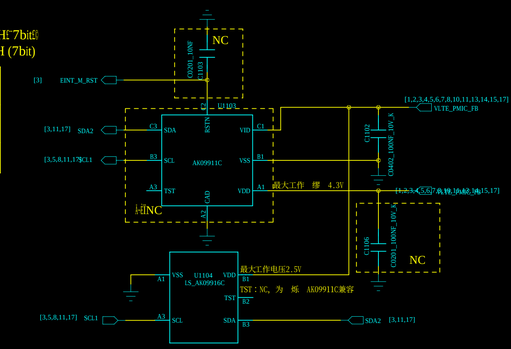

ÆÁ±ÎÕÖAND¶¨Î»¿×

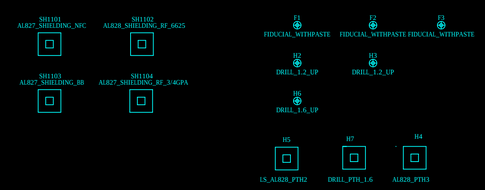

DRAWN: Longbaicheng	DATED: 2020-11-13	COMPANY: OPPO			
CHECKED: <Checked By>	DATED: <Checked Date>	TITLE: Realme4			
QUALITY CONTROL: <QC By>	DATED: <QC Date>	CODE: <Code>	SIZE: D	DRAWING NO: <Drawing Number>	REV: V1.0
RELEASED: <Released By>	DATED: NA	SCALE: <Scale>		SHEET: 11 OF 18	

该文档是极速PDF编辑器生成
如果想去掉该提示,请访问并下载:
http://www.jisupdfeditor.com/

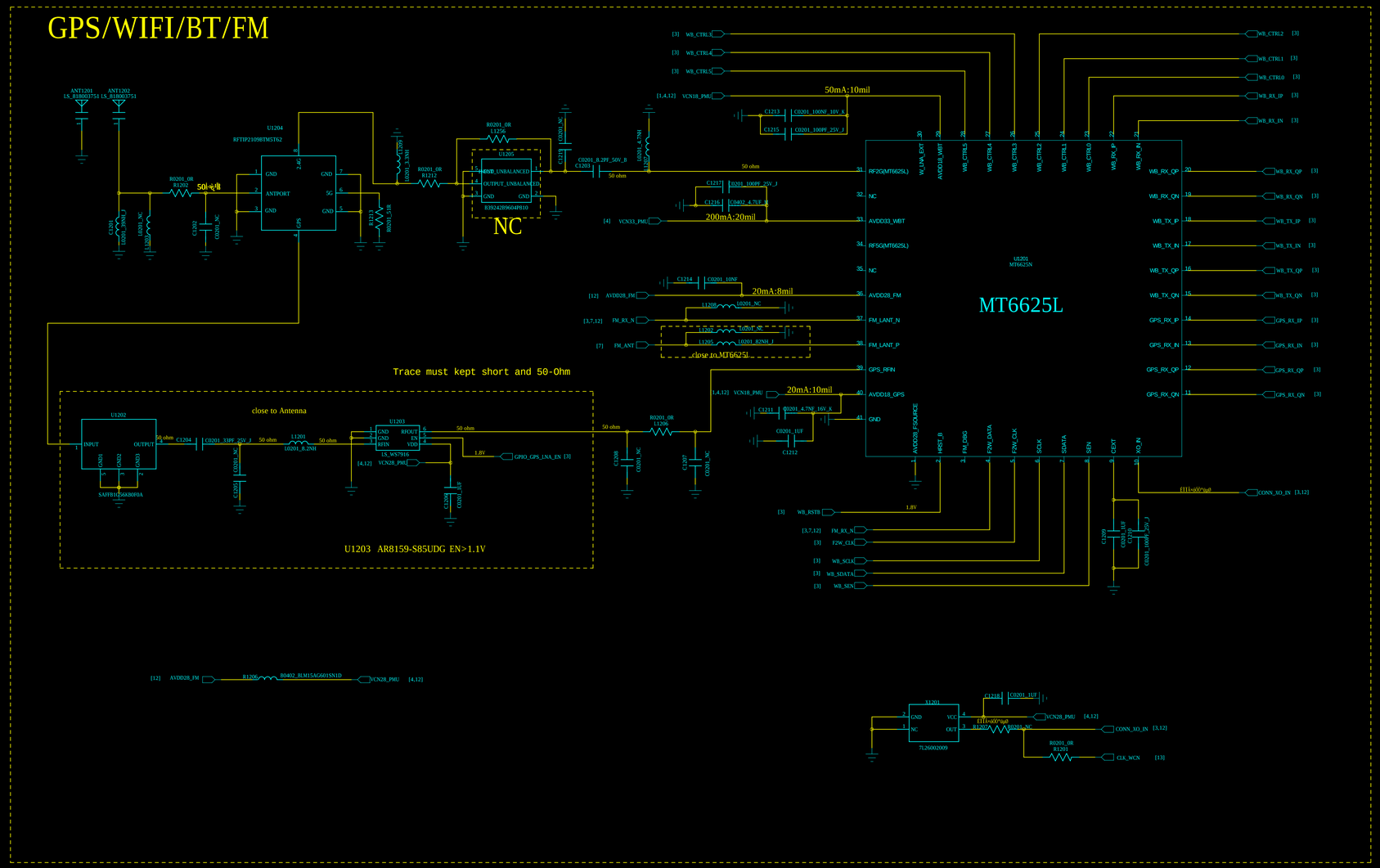

COMPANY: OPPO					
TITLE: Realme4					
DRAWN: Longbaicheng	DATED: 2020-11-13				
CHECKED: <Checked By>	DATED: <Checked Date>	CODE: <Code>	SIZE: D	DRAWING NO: <Drawing Number>	REV: V1.0
QUALITY CONTROL: <QC By>	DATED: <QC Date>				
RELEASED: <Released By>	DATED: NA	SCALE: <Scale>		SHEET: 12 OF 18	

该文档是极速PDF编辑器生成
如果想去掉该提示,请访问并下载:
http://www.jisupdfeditor.com/

REVISION RECORD			
LTR	ECO NO:	APPROVED:	DATE:

MT6169

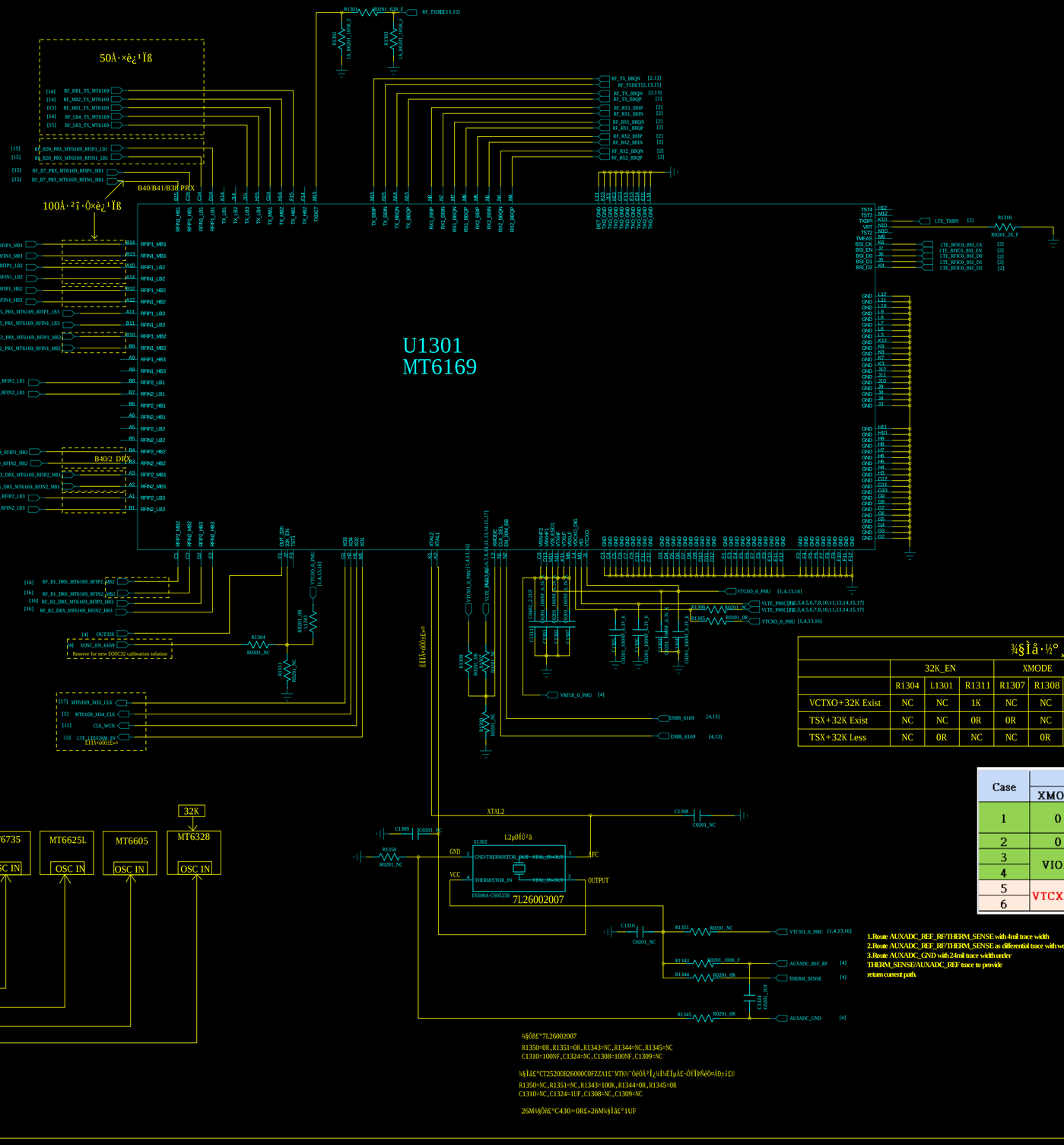

¾§Ìå·½°¸ÙùÆ¬Åäºõ±í2/3 (Page4¡¢13¡¢16£©

	32K_EN		XMODE			VDCXO_DIG		VCTCXO/TSX Component									
	R1304	L1301	R1311	R1307	R1308	R1309	R1306	R1305	C1308	C1309	R1350	R1351	R1343	R1344	R1345	C1310	C1324	X1302
VCTXO+32K Exist	NC	NC	1K	NC	NC	1K	0R	NC	100nF	NC	0R	0R	NC	NC	NC	100nF	NC	VCTXO
TSX+32K Exist	NC	NC	0R	0R	NC	NC	0R	NC	NC	NC	NC	NC	100K	0R	0R	NC	1uF	TSX
TSX+32K Less	NC	0R	NC	NC	0R	NC	NC	0R	NC	NC	NC	NC	100K	0R	0R	NC	1uF	TSX

Case	MT6169 Control Pin					MT6169 CLK Output			Clock scheme
	XMODE	32K_EN	VDXCO_DIG	EN_26M_BB	CLK_SEL	OUT_32K	XO1	XO2~4	
1	0	0	VIO18	0	0	Off	Off	Off	VCTXO 32K XO
2	0	0		1	1	Off	26M Out	26M Out	
3	VIO18	0		0	0	Off	Off	Off	26M XO
4		0		1	1	Off	26M Out	26M Out	32K XO
5	VTCXO28	XOSC_EN_6169	VTCXO28	0	0	On	Off(LPM)	Off	26M XO
6		1		1	1	On	26M Out	26M Out	32K Less

1.Route AUXADC_REF_RF/THERM_SENSE with 4mil trace width
2.Route AUXADC_REF_RF/THERM_SENSE as differential trace with well GND shielding
3.Route AUXADC_GND with 24mil trace width under
THERM_SENSE/AUXADC_REF trace to provide
return current path.

¾§ÑÛÉ°7L26002007
R1350=0R,R1351=0R,R1343=NC,R1344=NC,R1345=NC
C1310=100NF,C1324=NC,C1308=100NF,C1309=NC

¾§Ìå£°CT2520DB26000COFZZA1£¨MTK¼¯³ÉµçÂ·Ì¿¼ìÊ¹ÓÃÎþÂÉ-ÓÝÎÞÑÇÔ=ÀÐ±íÉÏ£©
R1350=NC,R1351=NC,R1343=100K,R1344=0R,R1345=0R
C1310=NC,C1324=1UF,C1308=NC,C1309=NC

26M¾§ÑÛÉ°C430=0R£»26M¾§Ìå£°1UF

DRAWN:	Longbaicheng	DATED:	2020-11-13
CHECKED:	<Checked By>	DATED:	<Checked Date>
QUALITY CONTROL:	<QC By>	DATED:	<QC Date>
RELEASED:	<Released By>	DATED:	NA

COMPANY:	OPPO			
TITLE:	Realme4			
CODE:	SIZE:	DRAWING NO:		REV:
<Code>	D	<Drawing Number>		V1.0
SCALE: <Scale>			SHEET: 13 OF 18	

该文档是极速PDF编辑器生成
如果想去掉该提示,请访问并下载:
http://www.jisupdfeditor.com/

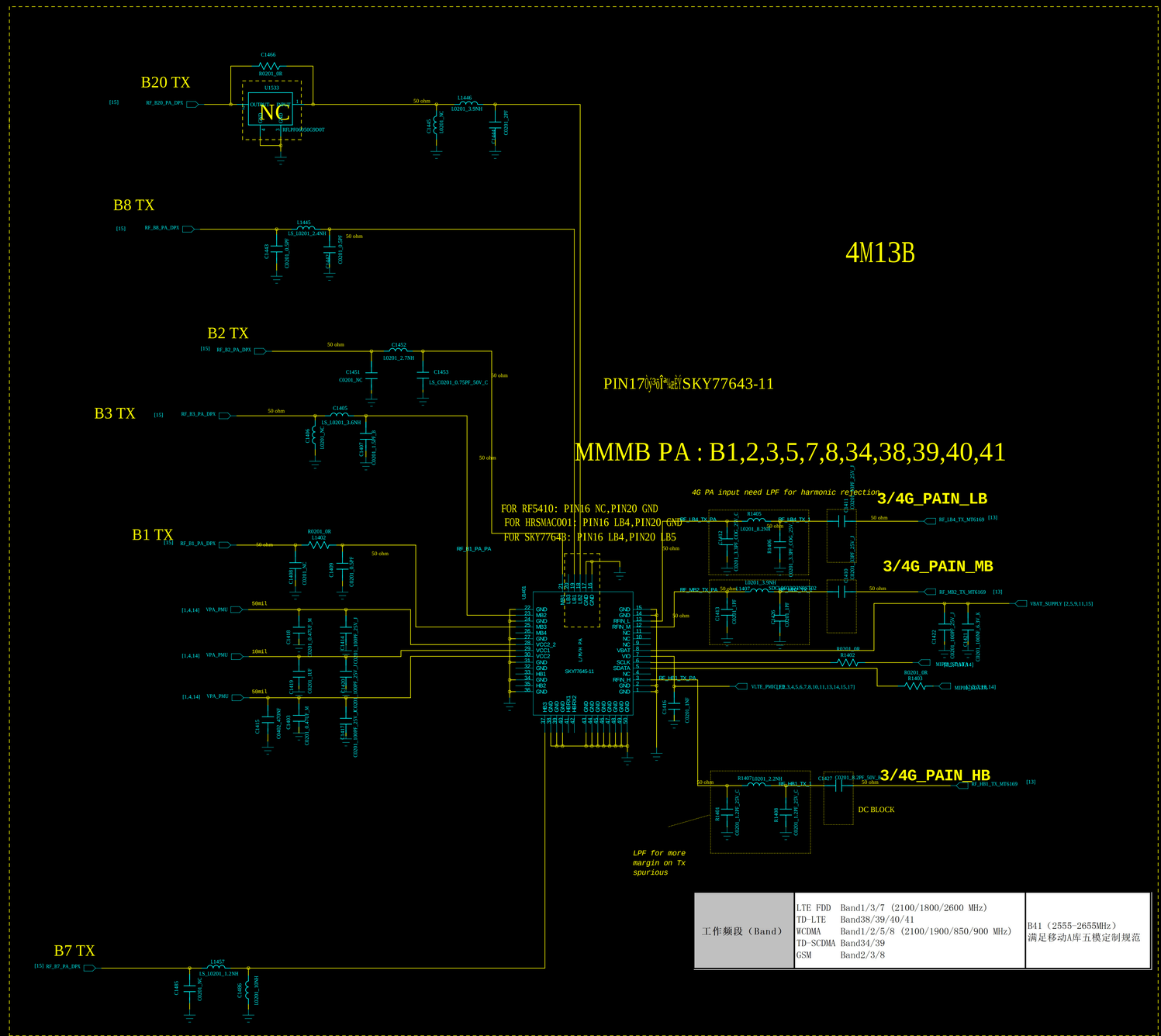

工作频段（Band）	LTE FDD Band1/3/7 (2100/1800/2600 MHz) TD-LTE Band38/39/40/41 WCDMA Band1/2/5/8 (2100/1900/850/900 MHz) TD-SCDMA Band34/39 GSM Band2/3/8	B41（2555-2655MHz） 满足移动A库五模定制规范

Thermistor / To sense board level temperature

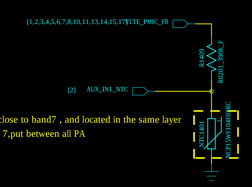

NTC1401 close to band7 , and located in the same layer if no band 7,put between all PA

COMPANY: OPPO					
TITLE: Realme4					
DRAWN: Longbaicheng	DATED: 2020-11-13				
CHECKED: <Checked By>	DATED: <Checked Date>	CODE: <Code>	SIZE: D	DRAWING NO: <Drawing Number>	REV: V1.0
QUALITY CONTROL: <QC By>	DATED: <QC Date>				
RELEASED: <Released By>	DATED: NA	SCALE: <Scale>		SHEET: 14 OF 18	

该文档是极速PDF编辑器生成
如果想去掉该提示,请访问并下载:
http://www.jisupdfeditor.com/

77916:24~37,77912:27~36,77910:28~35

ASM_Main

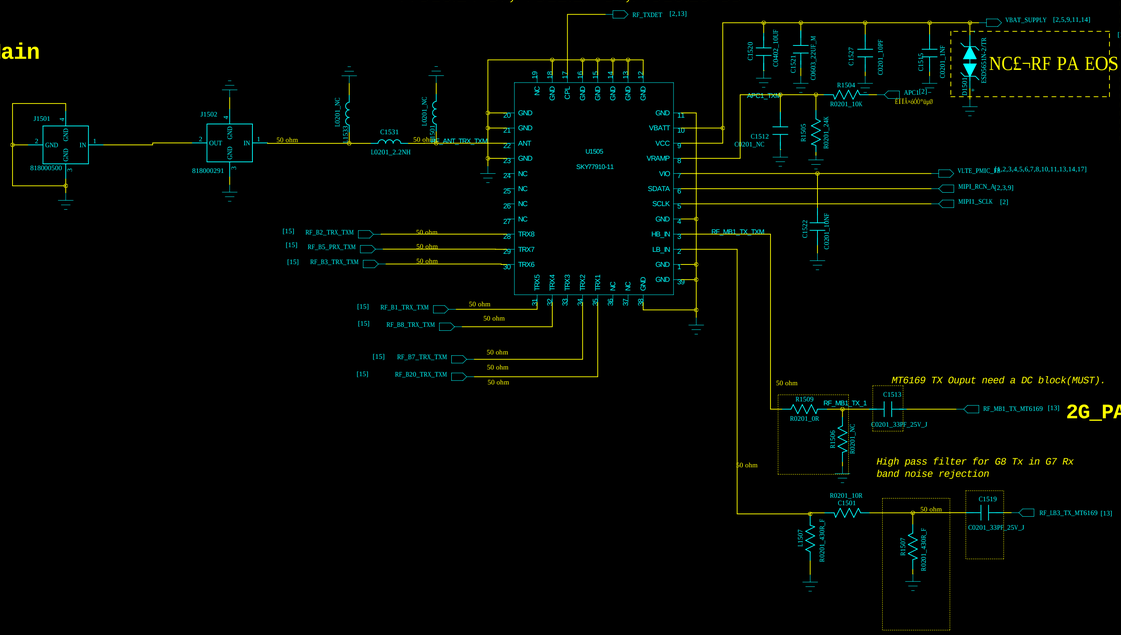

B2 TRX

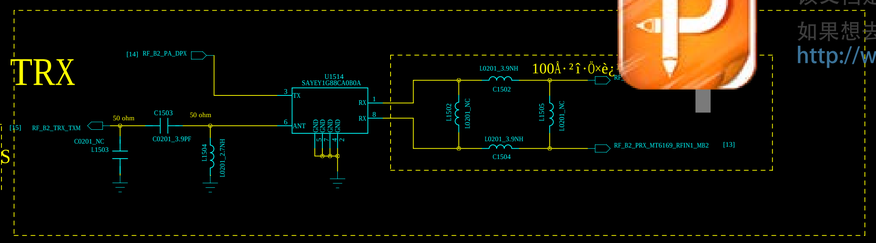

B8 TRX(Á³Í¨ÅäÖÃ)

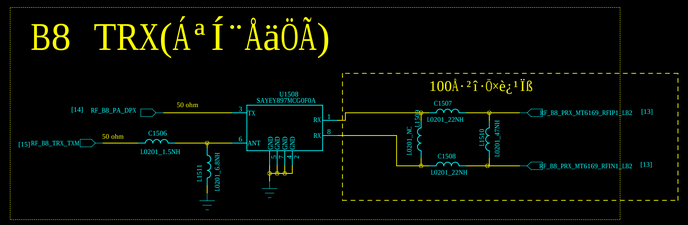

MT6169 TX Ouput need a DC block(MUST).

High pass filter for G8 Tx in G7 Rx band noise rejection

2G_PAIN_HB

2G_PAIN_LB

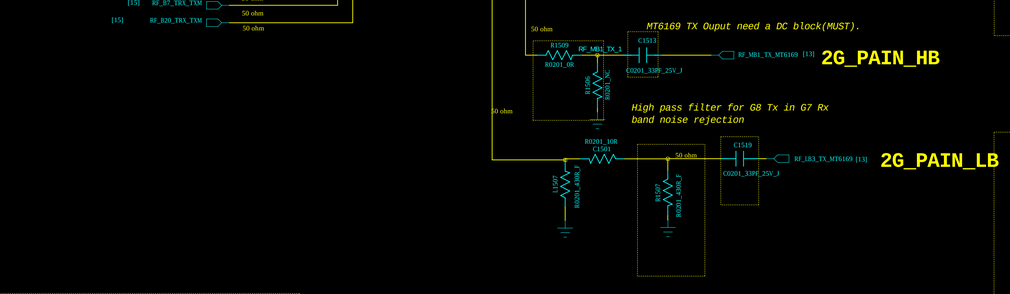

B3 TRX

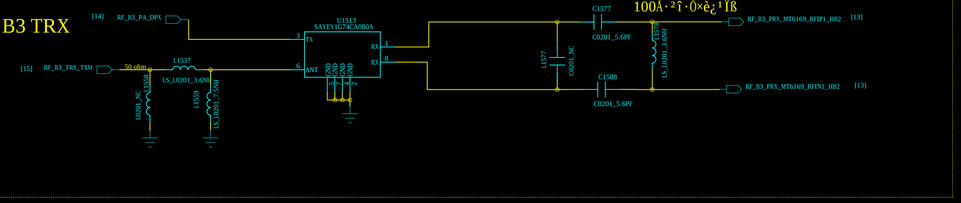

B5 PRX

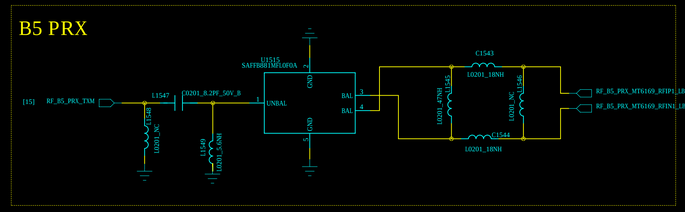

B7 TRX

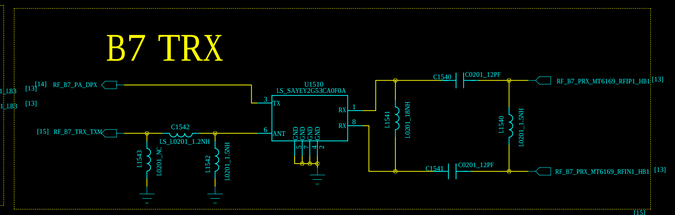

B20 TRX

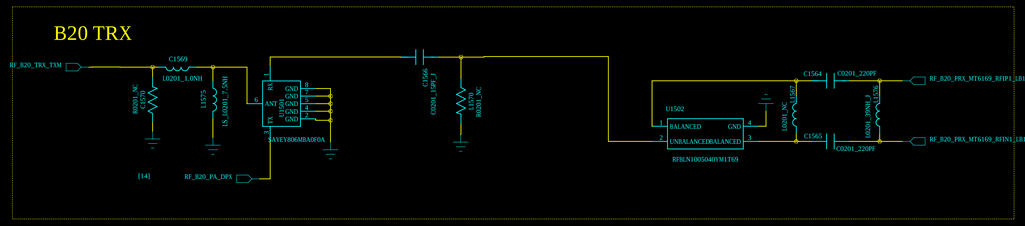

B1 TRX

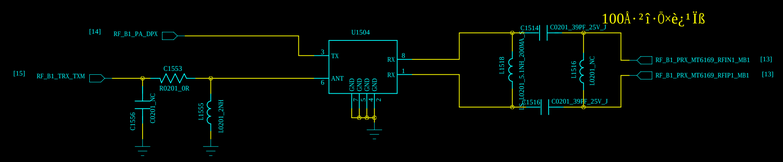

100Å·²Î·Ô×è¿¹ÎßB

REVISION RECORD					
ECR:	ECO NO:	APPROVED:	DATE:		
DRAWN: Longbaicheng	DATED: 2020-11-13	COMPANY: OPPO			
CHECKED: <Checked By>	DATED: <Checked Date>	TITLE: Realme4			
QUALITY CONTROL: <QC By>	DATED: <QC Date>	CODE: <Code>	SIZE: D	DRAWING NO: <Drawing Number>	REV: V1.0
RELEASED: <Released By>	DATED: NA	SCALE: <Scale>		SHEET: 15 OF 18	

该文档是极速PDF编辑器生成
如果想去掉该提示,请访问并下载:
http://www.jisupdfeditor.com/

REVISION HISTORY			
LTR	ECO NO:	APPROVED:	DATE:

DRX ANT: 1805-2655MHz

DRX Car Kit

¼§Ìå·½°¸¸¨Ìú£¬Ìå¬Åä0Å±ï3/3 (Page4¡€13¡€16£©		
	VTCXO2 Power	
	R1606	R1607
VCTXO+32K Exist	NC	0R
TSX+32K Exist	NC	0R
TSX+32K Less	0R	NC

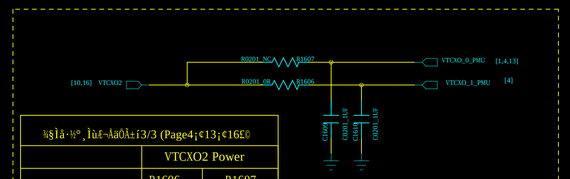

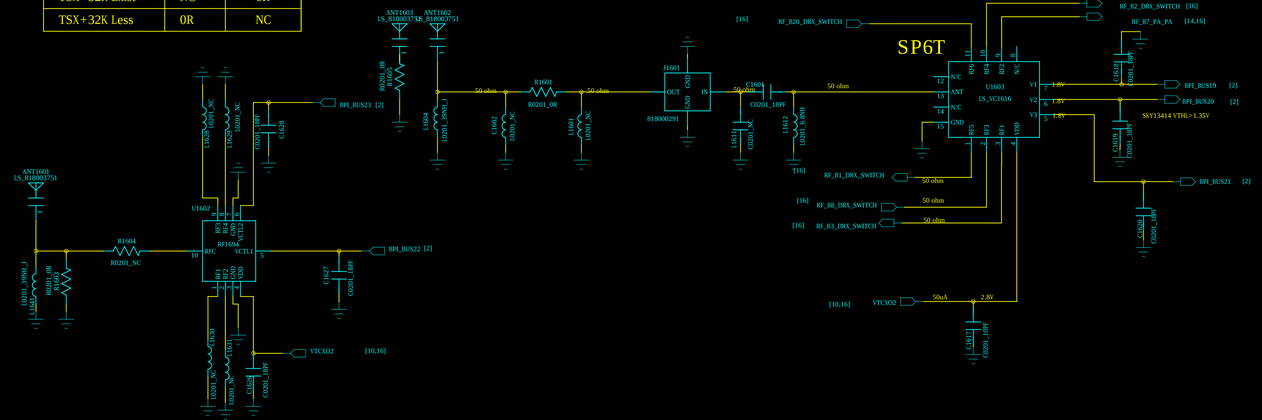

B1 DRX

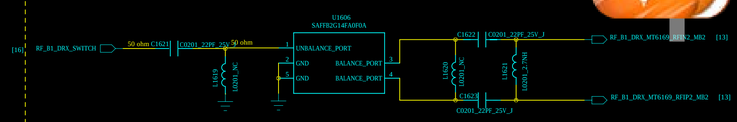

B8 DRX

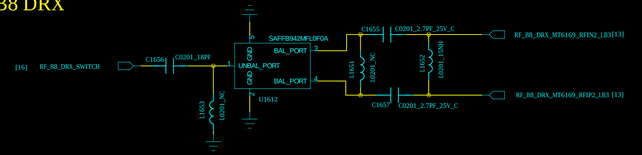

B3 DRX

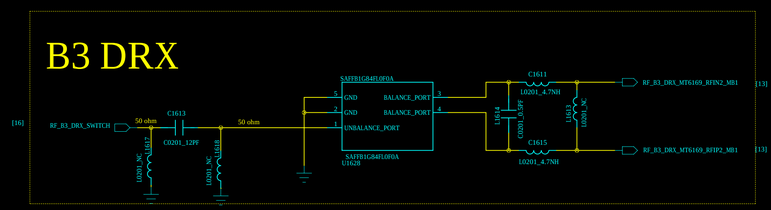

B2 DRX

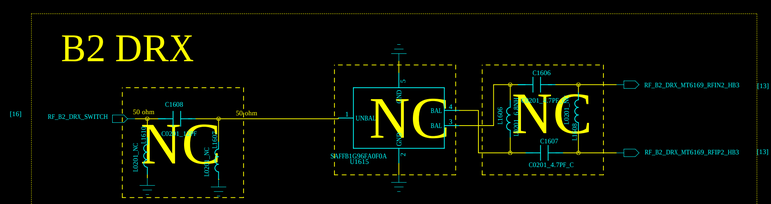

B7 DRX

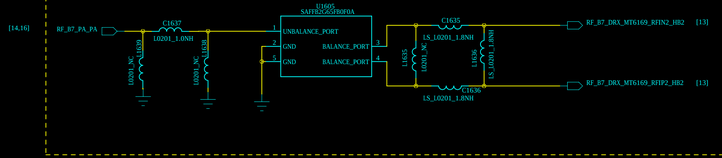

B20 DRX

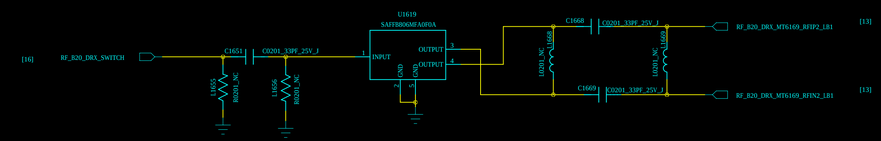

COMPANY:	OPPO		
TITLE:	Realme4		
DRAWN: Longbaicheng	DATED: 2020-11-13		
CHECKED: <Checked By>	DATED: <Checked Date>		
QUALITY CONTROL: <QC By>	DATED: <QC Date>		
RELEASED: <Released By>	DATED: NA		
CODE: <Code>	SIZE: D	DRAWING NO: <Drawing Number>	REV: V1.0
SCALE: <Scale>	SHEET: 16 OF 18		

该文档是极速PDF编辑器生成
如果想去掉该提示,请访问并下载:
http://www.jisupdfeditor.com/

REVISION RECORD			
LTR	ECO NO:	APPROVED:	DATE:

NFC

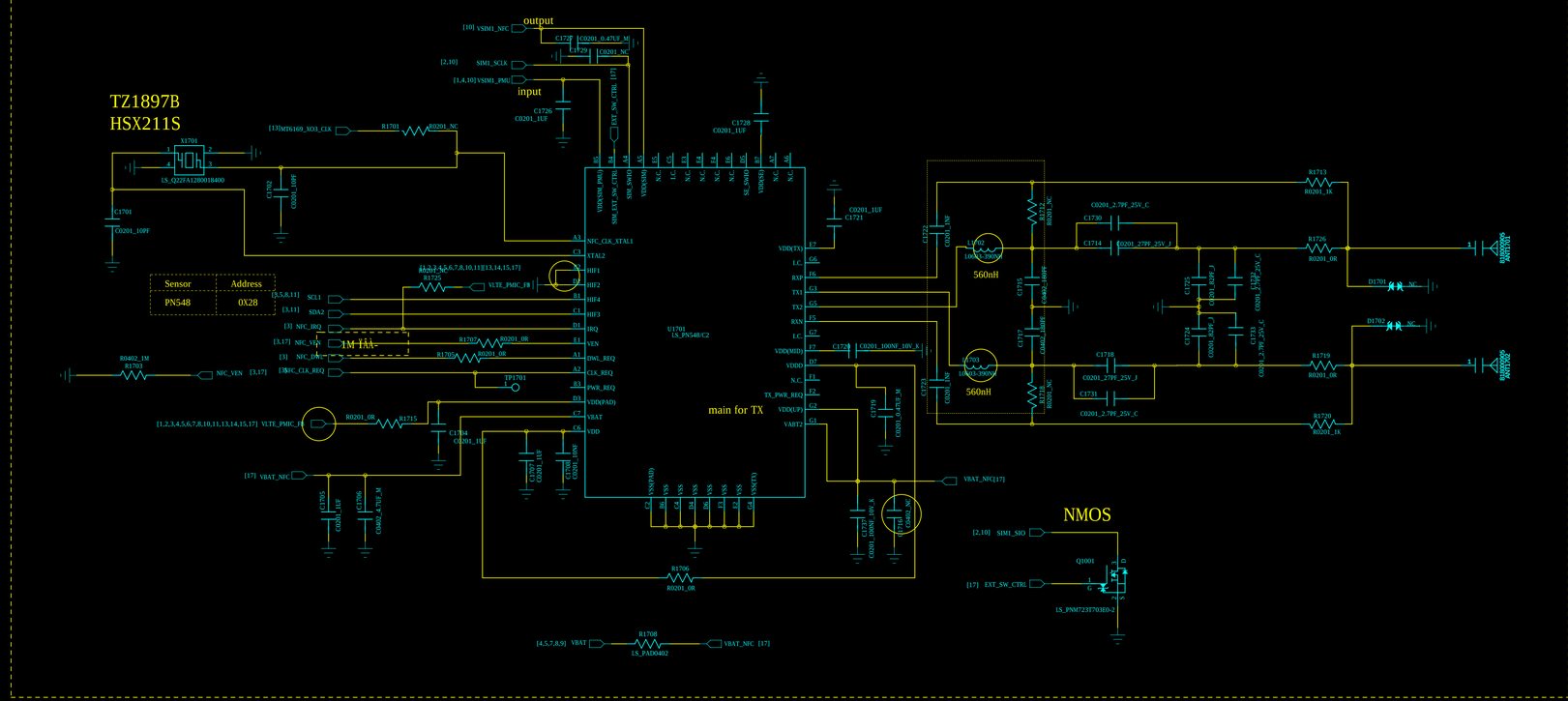

DRAWN: Longbaicheng	DATED: 2020-11-13	COMPANY: OPPO	
CHECKED: <Checked By>	DATED: <Checked Date>	TITLE: Realme4	
QUALITY CONTROL: <QC By>	DATED: <QC Date>	CODE: <Code>	SIZE: D
RELEASED: <Released By>	DATED: NA	DRAWING NO: <Drawing Number>	REV: V1.0
		SCALE: <Scale>	SHEET: 17 OF 18

该文档是极速PDF编辑器生成
如果想去掉该提示,请访问并下载:
http://www.jisupdfeditor.com/

ITR	ECO NO:	APPROVED:	DATE:

Project : MT6735 REF_SCH TOP LEVEL

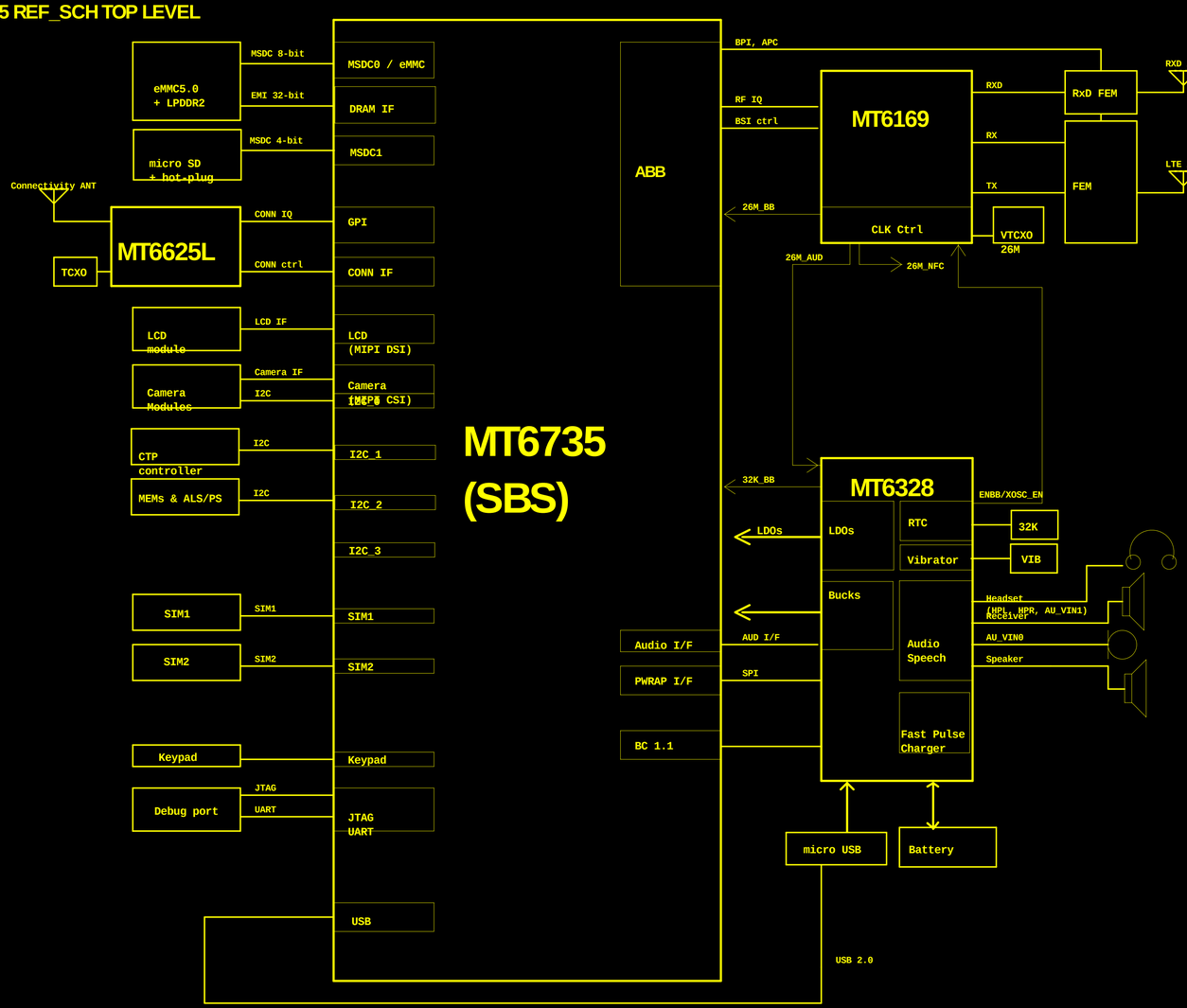

DRAWN: Longbaicheng	DATED: 2020-11-13	COMPANY: OPPO	
CHECKED: <Checked By>	DATED: <Checked Date>	TITLE: Realme4	
QUALITY CONTROL: <QC By>	DATED: <QC Date>	CODE: <Code>	SIZE: D
RELEASED: <Released By>	DATED: NA	DRAWING NO:	REV: V1.0
		SCALE: <Scale>	SHEET: 18 OF