Sharing from xinzhizhao member deegee

iPhone 15 Pro (A16) AP Layer

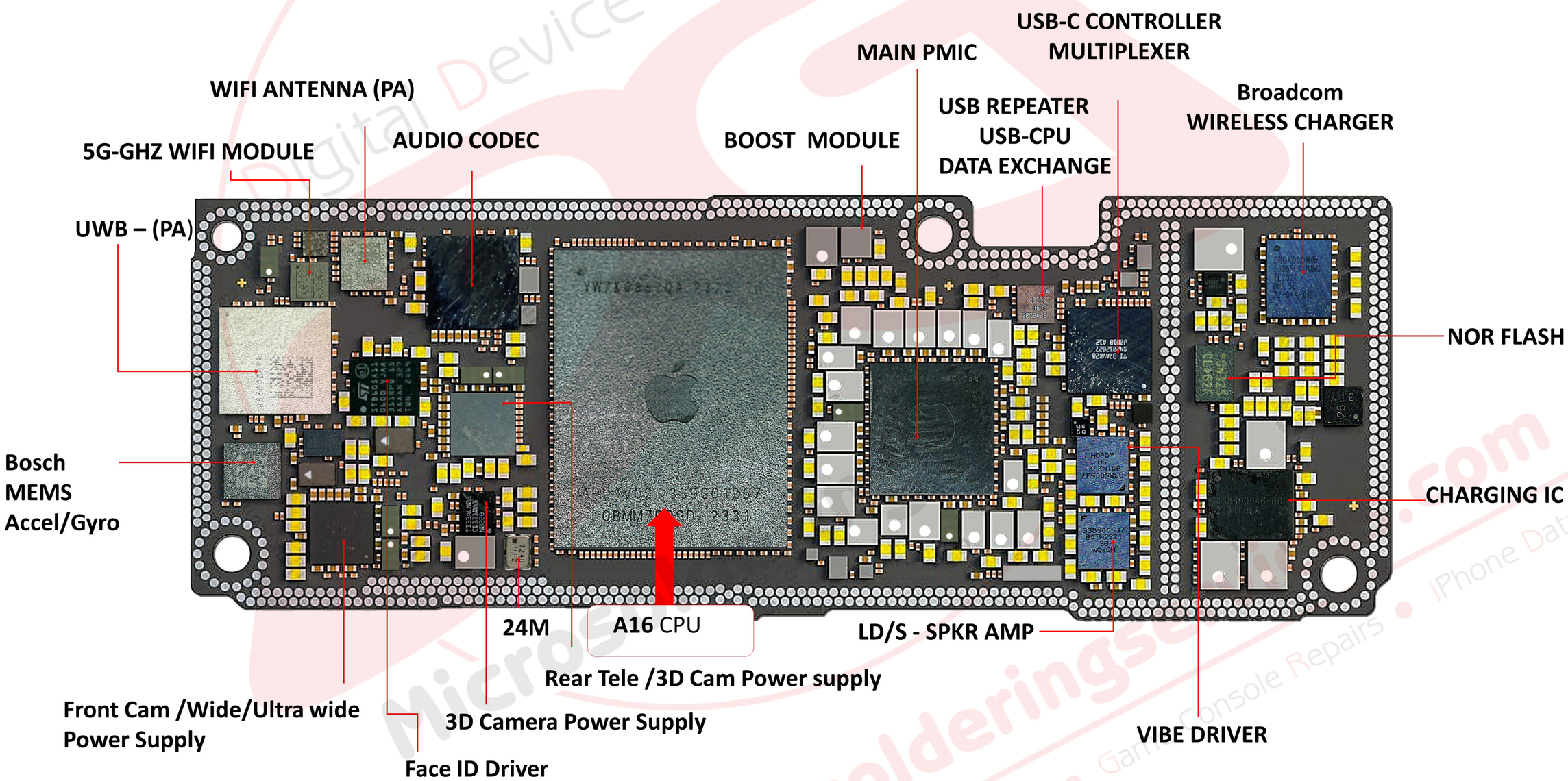

Sharing from xinzhizhao member deegee

iPhone 15 Pro (A16) RF Layer

mmWAVE TRC
- No Modem FW
- No Service
- No IMEI
- Weak Signal

MODEM
- No Modem FW
- No Service
- No Sim Detect
- No IMEI
- 4013
- Reboot

E-SIM MODULE
- No Signal
- No Sim Detect

TRC-2
- No Modem FW
- No IMEI - *#06#
- No Service
- Weak Signal

MHB PA
- No Service
- No 3/4G
- Weak Signal
- High Current – VDD MAIN

U-QET0
- No Service
- No 3/4G
- High Current – VDD MAIN

U-QET1
- No Service
- No 3/4G
- High Current – VDD MAIN

TANGIERS SiP – U_TAN
- No 5G - Tuning
- High Current

GPS
- No GPS Service

SMYRNA
- No 5G
- Weak Signal

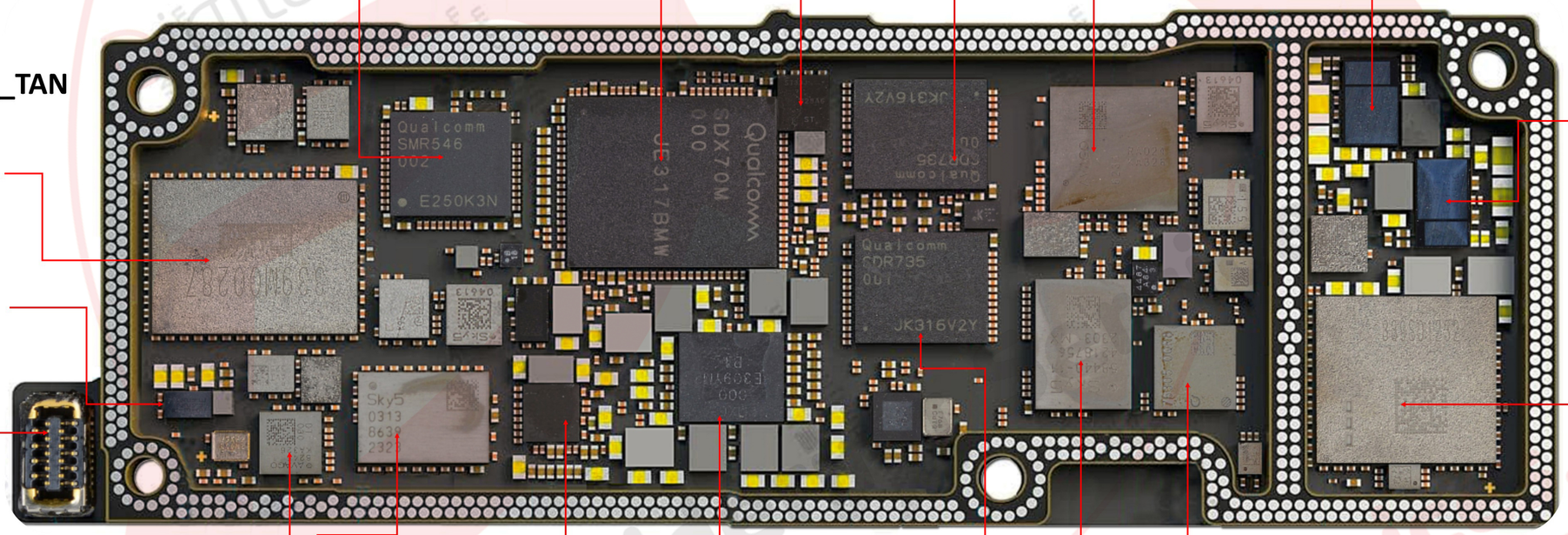

WIFI-BT MODULE
- No Wi-Fi
- No Bluetooth
- Router Passcode not accepted
- High Current – VDD MAIN

UHB-DSM
- No Service
- No Internet
- Poor 2/3/4g Service

HB-DSM-RX/TX
- No Service
- No Internet
- Poor 2/3/4g Service

PRIMARY NFC CONTROLLER
- No Apple Pay
- Passcode Freeze

MODEM PMU
- No Modem FW
- No IMEI – *#06#
- No Service
- 4013 Clock Error

TRC-1
- No Modem FW
- No IMEI
- No Service
- Weak Signal

LOW BAND PA
- No Service
- 3/4G Weak Signals

UHB PA
- No Service
- 3/4G Weak Signals

Sharing from xinzhizhao member deegee

iPhone 15 Pro (A16) FPC Layer

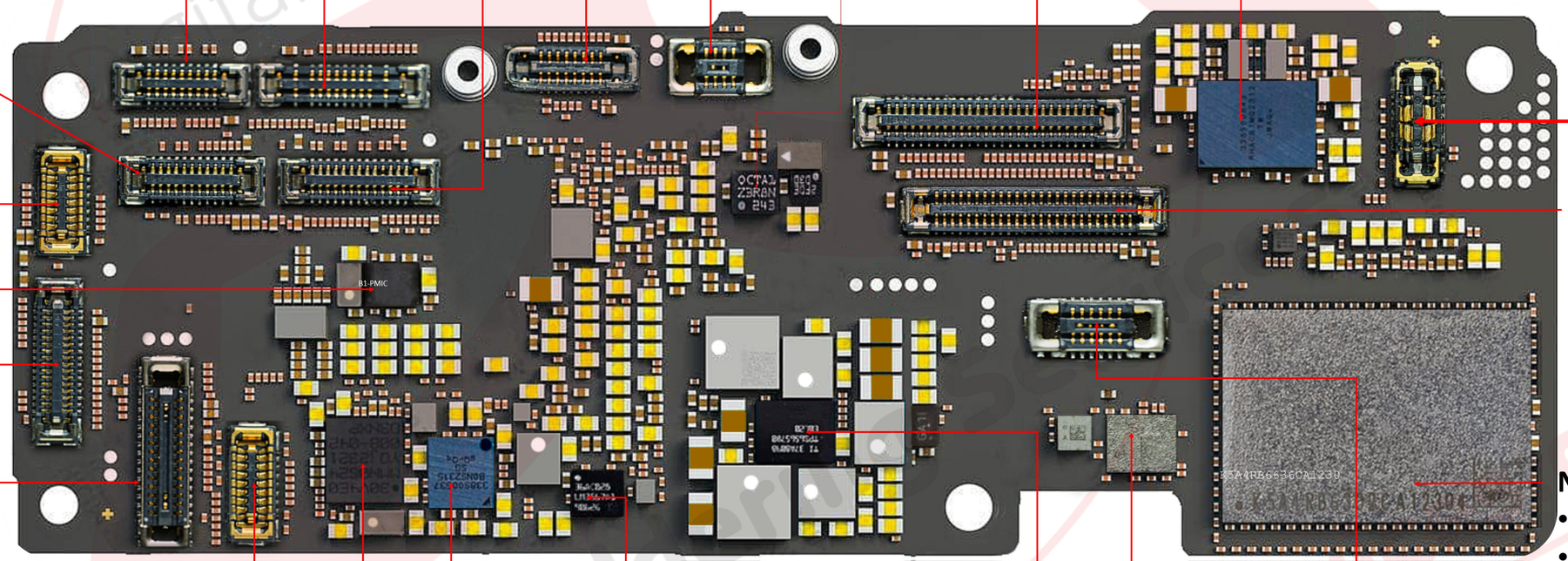

WIDE CAM

JASPER CAM / LIDAR

PWR BTN
- Power ON
- Volume/Mute
- Wireless Charger
- Reboots

LOGIC EEPROM
- No Boot
- Apple Logo Reboot
- Data Recovery

DOCK FLEX
- Charging
- Mic Calls
- Sound
- Vibrate
- USB-C Hi Speed TX/RX
- Thunderbolt Display
- Fast Charging PD
- Reboot
- PC Comms
- Sensors

UAT 2
- No Service
- Calls
- Internet

TELE-CAM
Telephoto Camera

BOOSTMODULE

SUPER WIDE CAM
No Boot

BATTERY

FCAM
- Front Camera - Paired
- Reboot

DISPLAY/TOUCH
- Touch
- Display - AMOLED
- Reboots

TELEPHOTO PMU

INFRARED CAM
- Face ID
- Dot Projector
- Flood Illuminator

NAND STORAGE
- No Boot
- Apple Logo Reboot
- No PC Comms
- Error 9/40/4014
- DFU Mode

UAT-RX
- Cannot Hear Caller
- No Service

Prox – Flex Sensors
- Compass
- Earpiece
- ALS
- Proximity
- Face ID

Fury – NFC (F)
- Apple Pay
- Password Input SEP
- Face ID
- Secure Element

L-SPKR/AMP

YETI –STROBE DRIVER
- Flash
- Torch

ANTENNA (PA)
- Wi-Fi
- Internet
- Calls

DISPLAY/PMU
- Display AMOLED
- Touch

LOWER ANT
- No Service
- Internet
- Calls

iPhone 15 Pro (A16) Bottom Test Point Layer

Sharing from xinzhizhao member deegee

WIRELESS CHARGING /FLASH/MIC														
0	660	658	630	631	590	591	371	/////////	0L	296	345	0L	OL	0L
0	695	660	0	648	630	0L	//////////	630	0L	690	681	340	342	0L

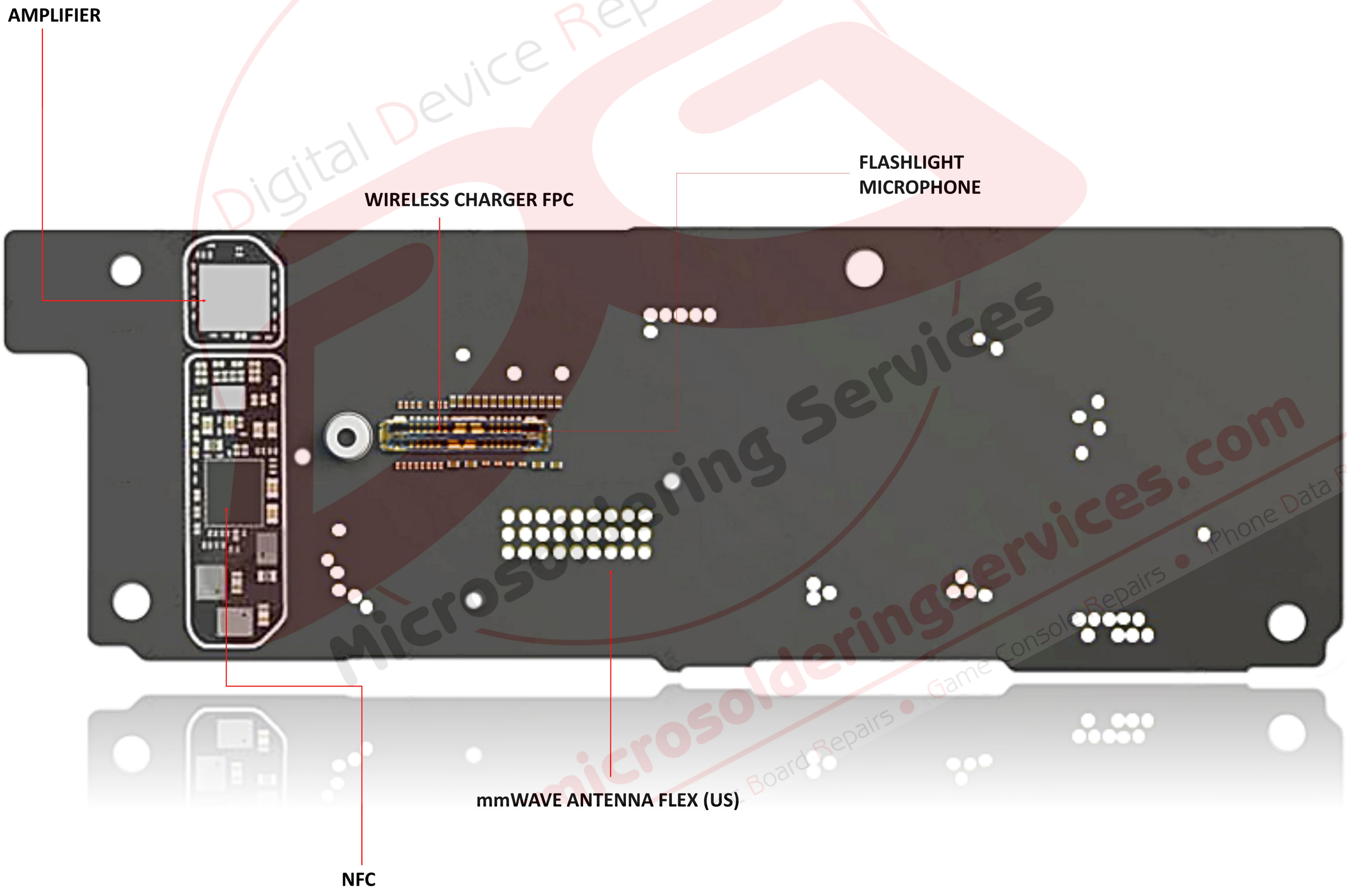

Microsoldering Services
microsolderingservices.com
Digital Device Repairs
Board Repairs • Game Consoles Repairs • iPhone Data Recovery

Sharing from xinzhizhao member deegee

iPhone 15 Pro (A16) FPC DM READING

DOCK CONNECTOR

0	320	320	0	280	280	0	290	0	280	280	0	320	320	0	760	761	761	750	0	510	752	290	0L	560	720	560	720	**1673**
0	546	545	634	330	332	332	655	680	665	695	740	742	645	660	671	670	660	696	336	430	430	431	431	721	560	561	721	**1673**

DISPLAY CONNECTOR

0	623	485	486	335	336	325	294	635	601	336	336	337	337	337	0	0L	0L	0	0L	0L	0	266	520	0	0L	**540**
0	268	874	0	580	335	340	334	334	562	335	336	730	335	420	510	0	0L	0L	0	0L	0L	0	485	0L	0L	**540**

TELE CAM

0	0L	0L	0	0L	0L	0	0L	0L	0	0L	0L	0	0L	**0**
0	543	546	370	426	430	0	486	490	532	435	510	367	367	**0**

LIDAR

0	595	0	0L	0L	0	446	0L	485	520	**0L**	**0**
0	405	407	369	585	527	487	0	485	564	440	**0**

WIDE CAM

375	0	0L	0L	0	0L	0L	0	490	490	**0**
375	512	430	0	510	0L	420	421	371	536	**0**

SUPER WIDE

0	0L	0L	0	0L	0L	0	523	512	430	490	490	**0**
0	600	605	0	0L	0L	0	0L	420	420	370	536	0

BATT CONN

***0**	565	394	501	**0**
0	447	0	0L	**0**

JUAT 2

0	1	0	486	0	**0**
0	0L	0L	0L	0L	**0**

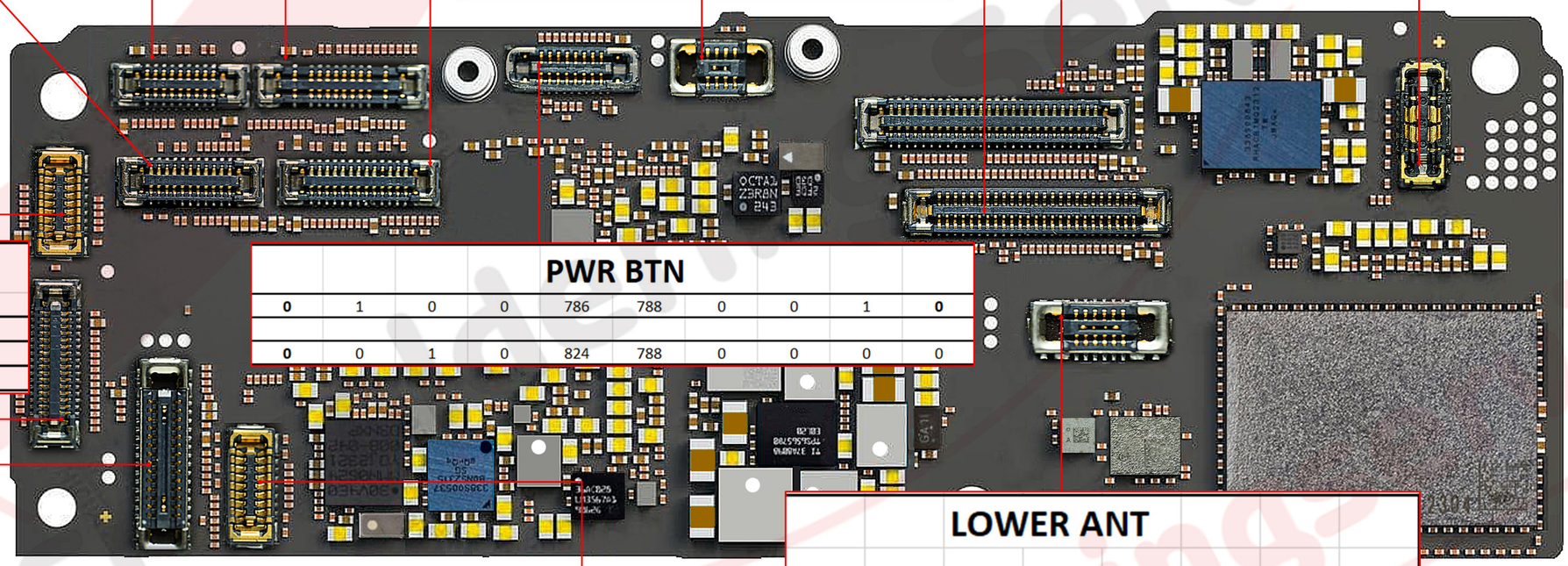

FCAM

603	515	491	370	500	0	0L	OL	**0**
603	OL	531	432	432	0	OL	OL	**0**

PWR BTN

0	1	0	0	786	788	0	0	1	**0**
0	0	1	0	824	788	0	0	0	0

LOWER ANT

***0**	0L	0	495	494	0	340	0
0	0	0	0	25	0	24	0

UAT-RX

***0**	340	0	0	0	0L	0L	0L	0L	0	42	0	640	485	655	**0**
0	0L	0	485	0	720	721	568	569	565	565	0	697	695	695	**0**

PROX FLEX

***0**	431	432	750	638	335	336	**0**
0	296	334	333	334	335	334	**0**

IRCAM

***0**	333	716	0L	0	405	405	405	404	382	380	0	616	350	523	693	590	**584**
0	0	335	340	334	430	418	420	0	480	640	710	492	0	701	0	0	**584**