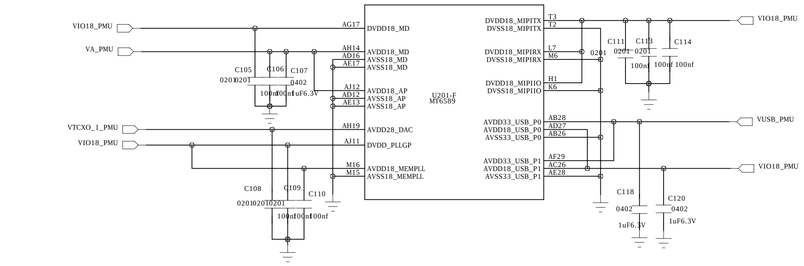

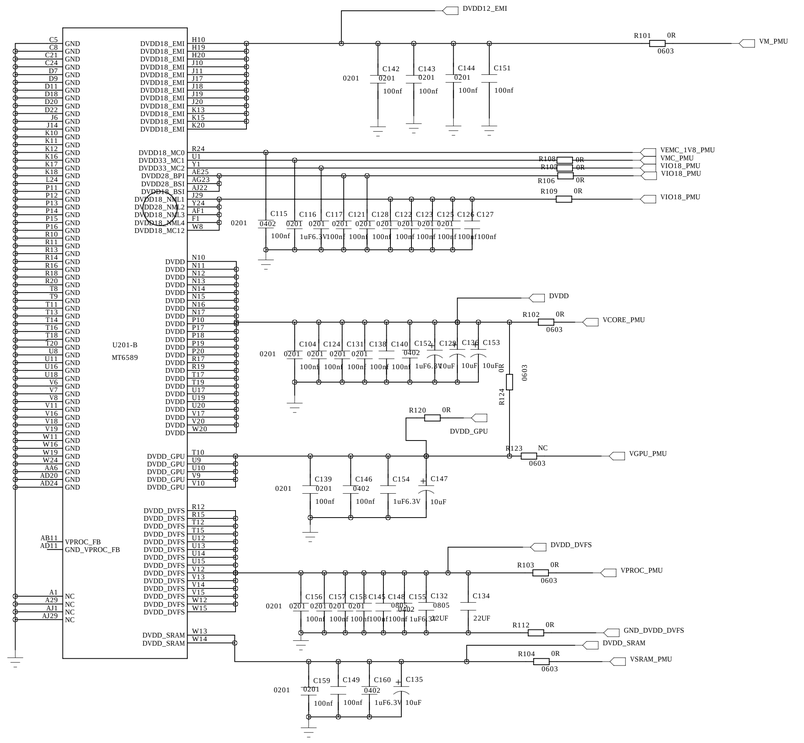

Title	
Size A1	Document Number
Rev V1.0	
Date: Friday, April 29, 2011	Sheet 1 of 13

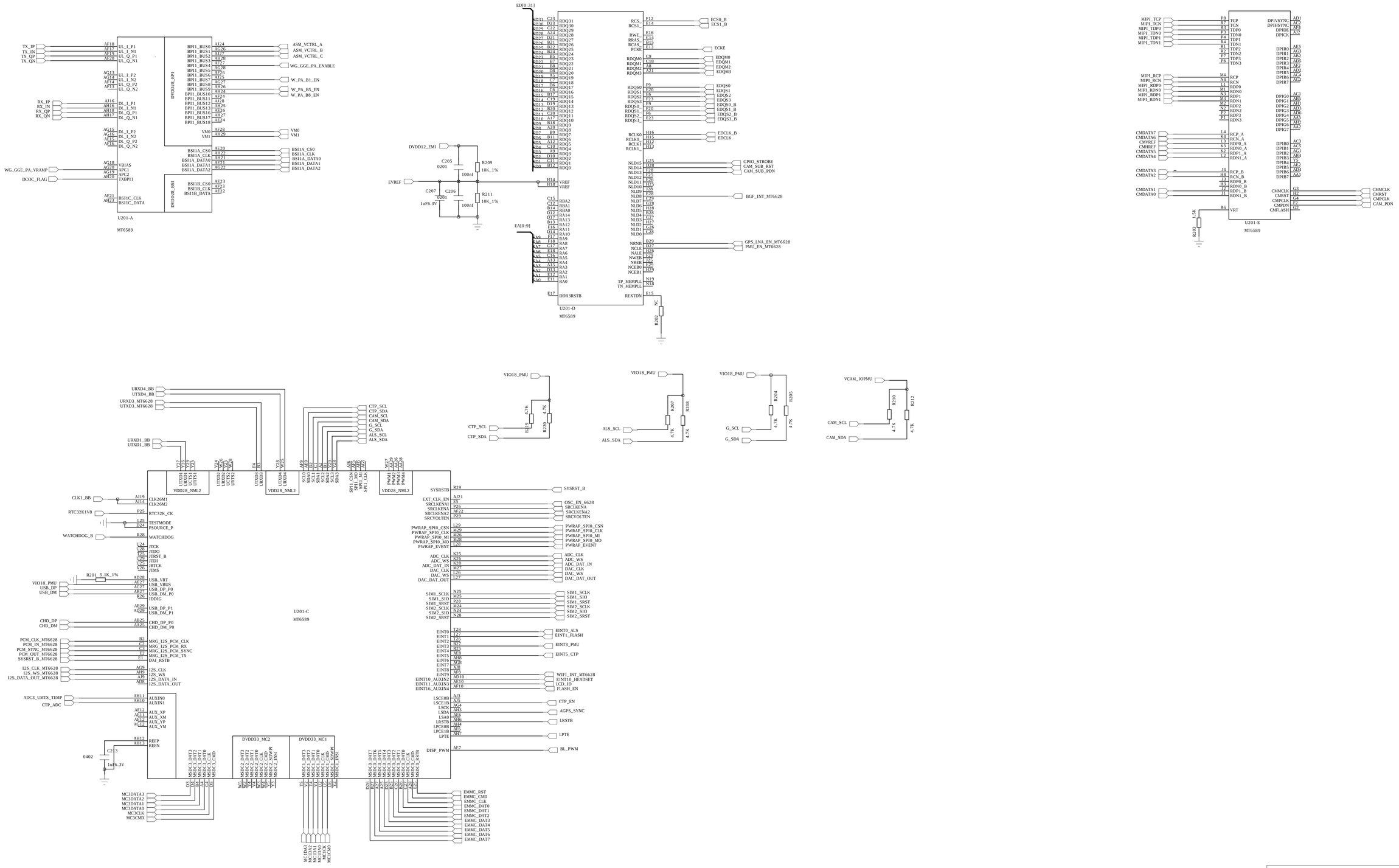

Title		
Size A1	Document Number	Rev V1.0
Date: Friday, April 29, 2011	Sheet 2 of 13	

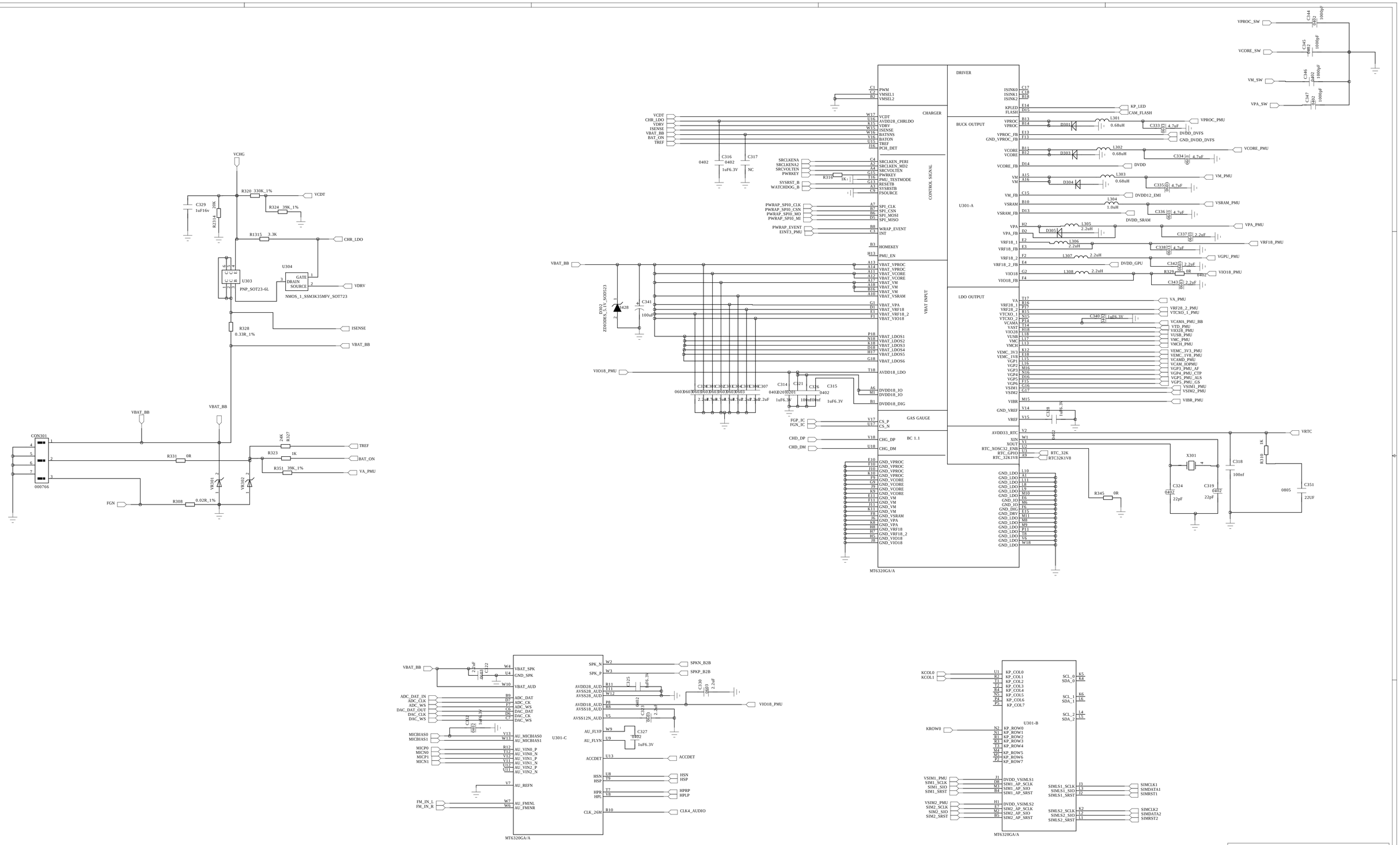

Title

Size	Document Number	Rev
A1		V1.0

Date: Friday, April 29, 2011 Sheet 3 of 13

REVISION RECORD			
LTR	ECO NO:	APPROVED:	DATE:

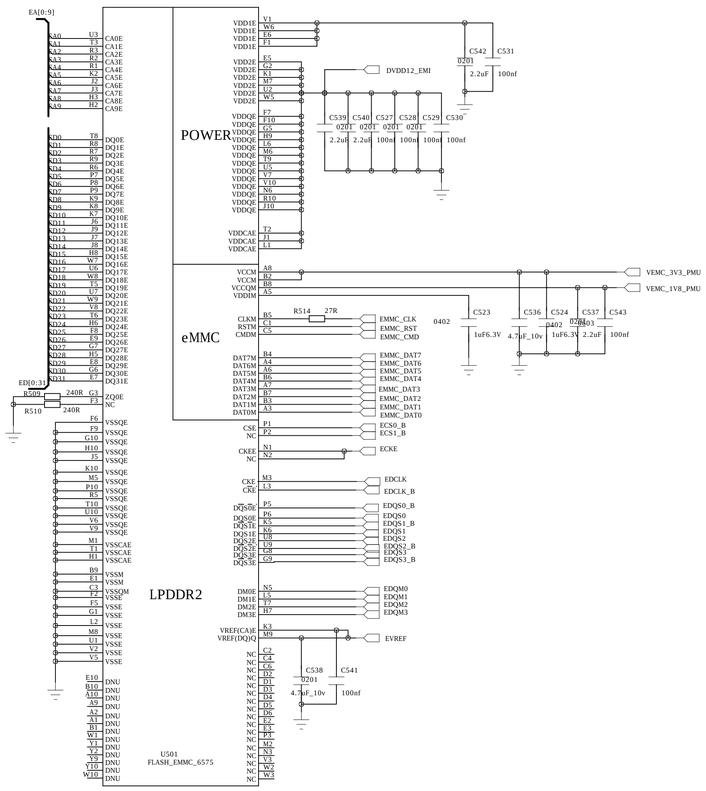

COMPANY:			
TITLE:			
DRAWN:	DATED:		
CHECKED:	DATED:	CODE:	SIZE:	DRAWING NO:	REV:
	DATED:		
RELEASED:	DATED:	SCALE:	SHEET: 4 OF 8

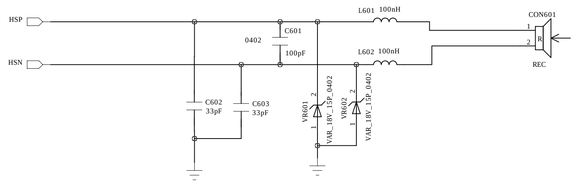

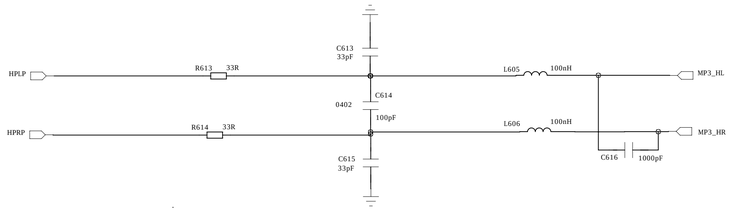

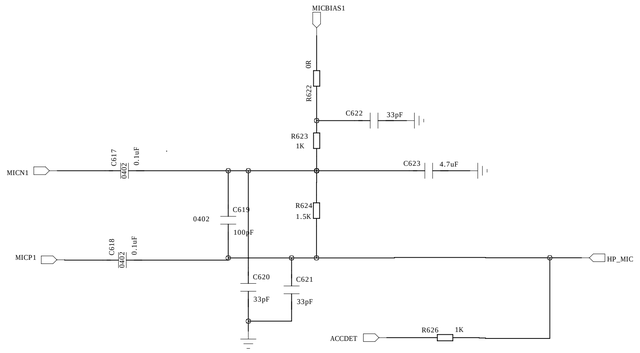

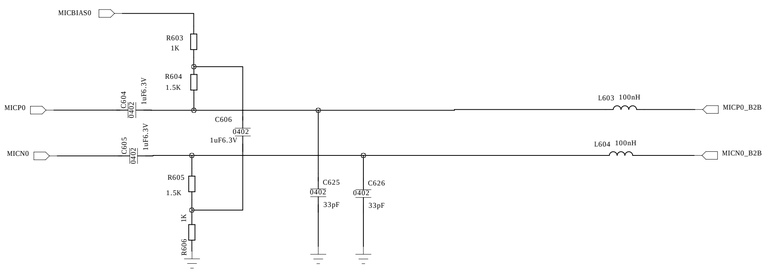

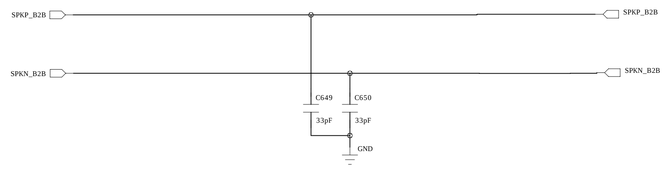

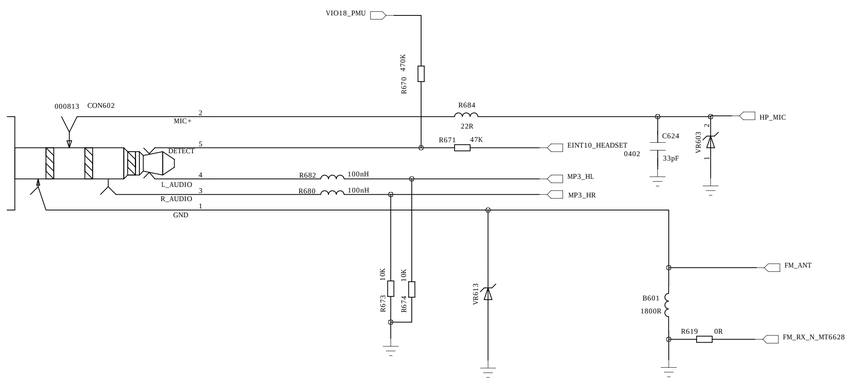

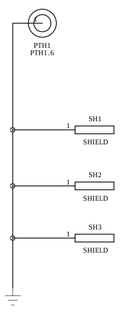

A1	Document Number	Rev V1.0
Date: Friday, April 29, 2011	Sheet 6 of 13	

REVISION RECORD			
LTR	ECO NO:	APPROVED:	DATE:

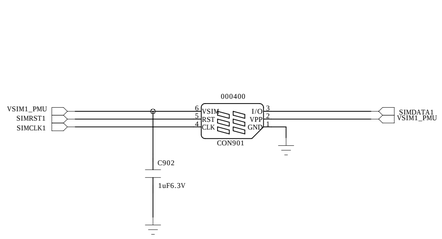

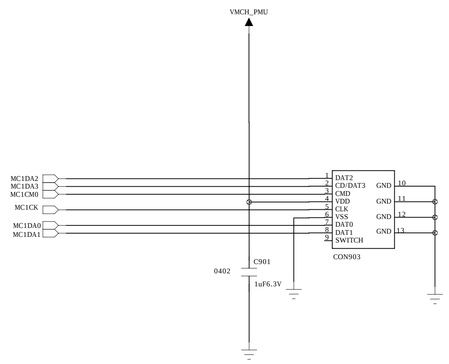

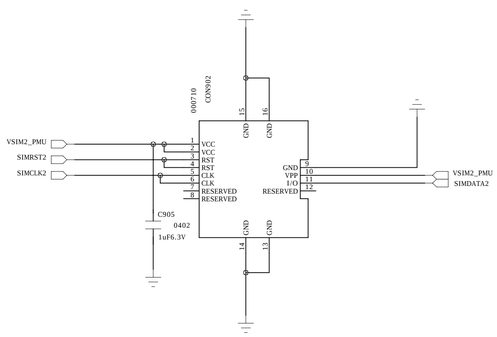

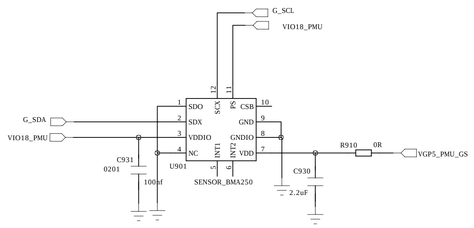

DRAWN:	DATED:	COMPANY:			
		TITLE:			
CHECKED:	DATED:	CODE:	SIZE:	DRAWING NO:	REV:
	DATED:				
RELEASED:	DATED:	SCALE:		SHEET: 4 OF 8	

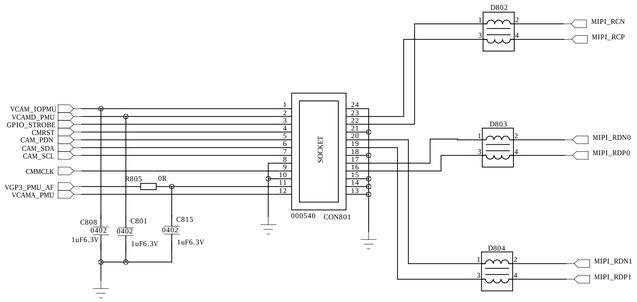

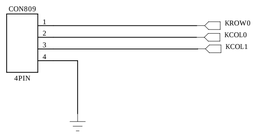

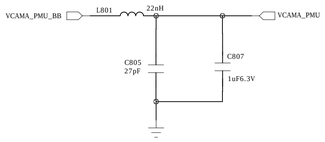

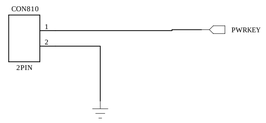

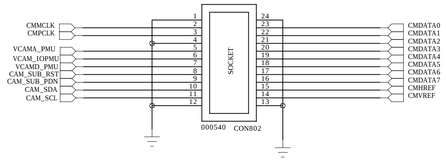

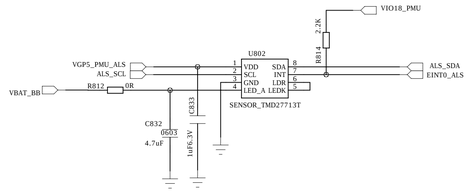

File			
Size A1	Document Number		Rev V1.0
Date: Friday, April 29, 2011	Sheet 8 of 13		

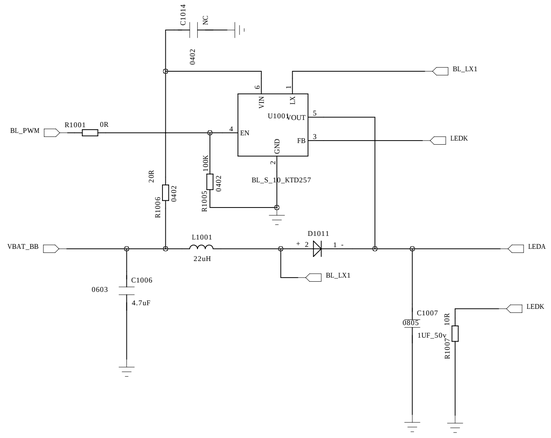

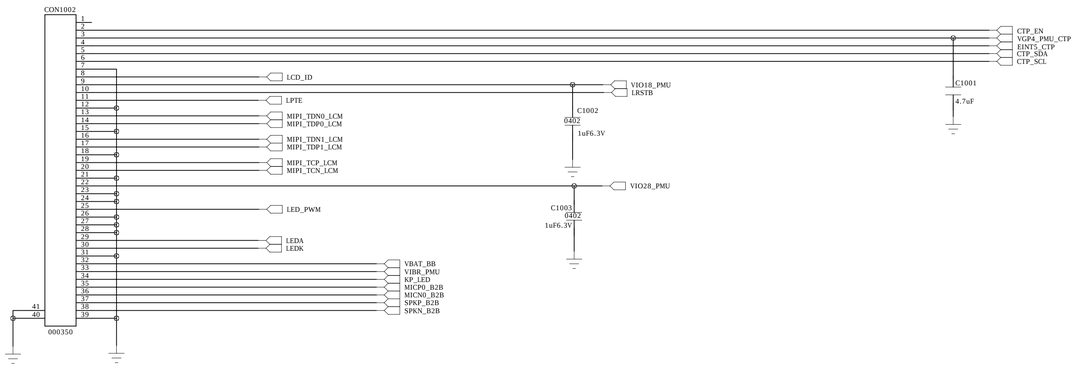

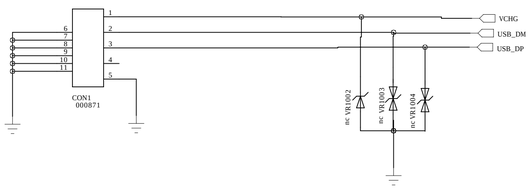

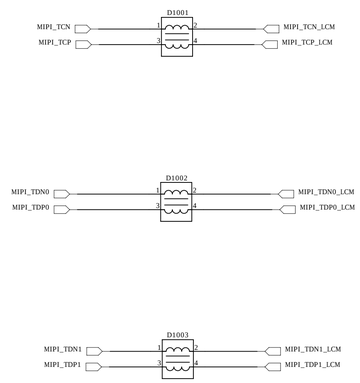

Title		
Size A1	Document Number	Rev V1.0
Date: Friday, April 29, 2011	Sheet 10 of 13	

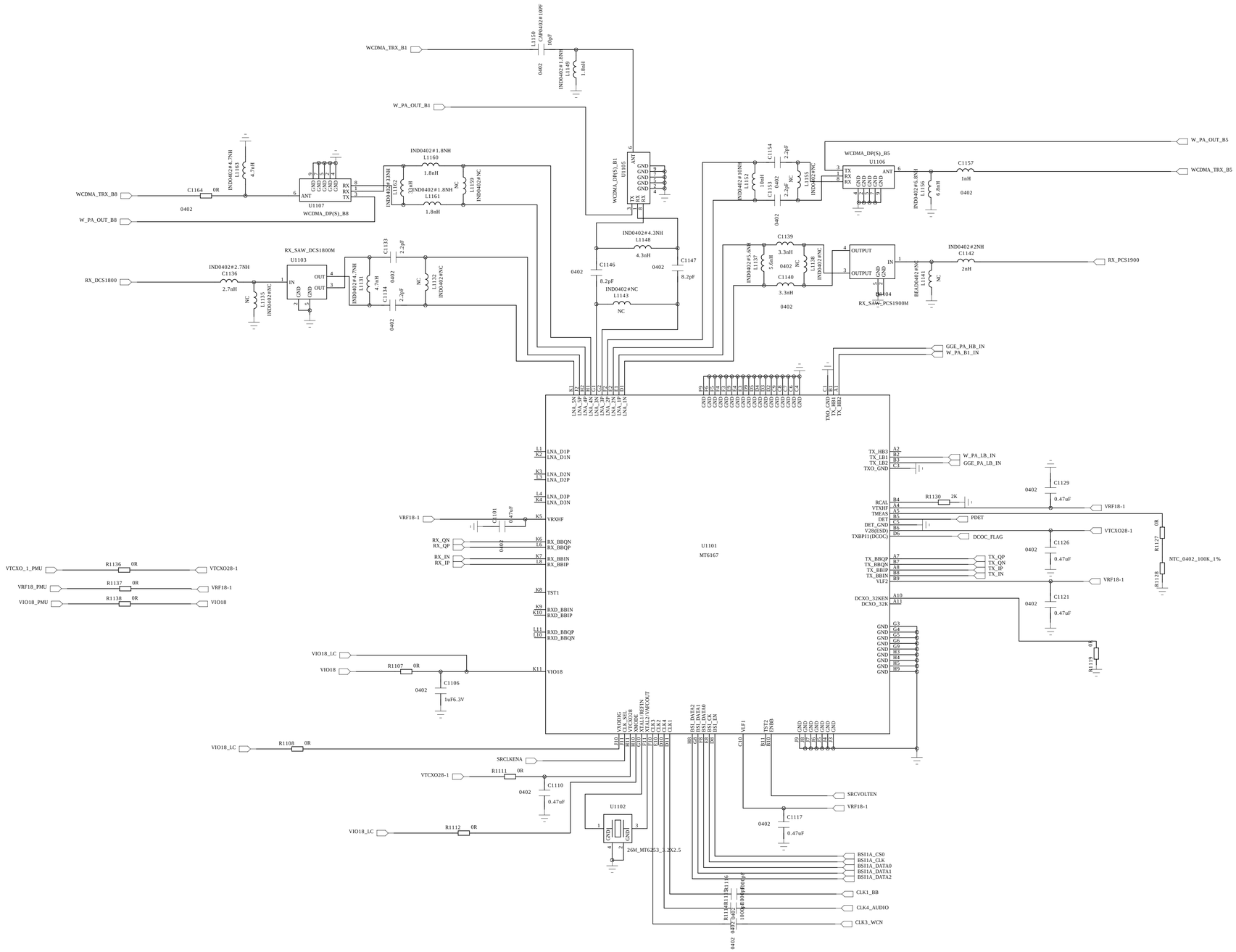
WCDMA_TRX_B1
L1150
CAP0402#10PF
10pF
0402
IND0402#1.8NH
L1149
1.8nH
W_PA_OUT_B1
WCDMA_TRX_B8
C1164
0R
0402
IND0402#4.7NH
L1158
4.7nH
U1107
WCDMA_DP(S)_B8
W_PA_OUT_B8
IND0402#1.8NH
L1160
1.8nH
IND0402#3.9NH
L1162
3.9nH
IND0402#1.8NH
L1161
1.8nH
NC
L1159
IND0402#NC
U1105
WCDMA_DP(S)_B1
IND0402#4.3NH
L1148
4.3nH
C1146
8.2pF
C1147
8.2pF
IND0402#NC
L1143
NC
W_PA_OUT_B5
WCDMA_TRX_B5
WCDMA_DP(S)_B5
U1106
ANT
C1157
1nH
0402
IND0402#6.8NH
L1156
6.8nH
IND0402#10NH
L1152
10nH
C1154
2.2pF
C1153
2.2pF
IND0402#2.7NH
L1155
IND0402#NC
IND0402#5.6NH
L1145
5.6nH
C1139
3.3nH
C1140
3.3nH
L1138
IND0402#NC
OUTPUT
IN
RX_SAW_PCS1900M
IND0402#2NH
C1142
2nH
RX_PCS1900
BEAD0402#NC
L1141
RX_SAW_DCS1800M
U1103
RX_DCS1800
IND0402#2.7NH
C1136
2.7nH
L1135
IND0402#NC
OUT
GND
IND0402#4.7NH
L1131
4.7nH
C1133
2.2pF
C1134
2.2pF
L1132
IND0402#NC
GGE_PA_HB_IN
W_PA_B1_IN
LNA_D1P
LNA_D1N
LNA_D2N
LNA_D2P
LNA_D3P
LNA_D3N
VRF18-1
C1101
0.47uF
VRXHF
RX_QN
RX_QP
RX_BBQN
RX_BBQP
RX_IN
RX_IP
RX_BBIN
RX_BBIP
U1101
MT6167
TST1
RXD_BBIN
RXD_BBIP
RXD_BBQP
RXD_BBQN
VIO18_LC
VIO18
R1107
0R
C1106
1uF6.3V
VTCXO_1_PMU
R1136
0R
VTCXO28-1
VRF18_PMU
R1137
0R
VRF18-1
VIO18_PMU
R1138
0R
VIO18
TX_HB3
TX_LB1
TX_LB2
TXO_GND
W_PA_LB_IN
GGE_PA_LB_IN
C1129
0.47uF
RCAL
VTXHF
TMEAS
DET
DET_GND
V28(ESD)
TXBP11(DCOC)
R1130
2K
PDET
DCOC_FLAG
VTCXO28-1
C1126
0.47uF
R1127
0R
NTC_0402_100K_1%
R1128
TX_BBQP
TX_BBQN
TX_BBIP
TX_BBIN
VLF2
TX_QP
TX_QN
TX_IP
TX_IN
VRF18-1
C1121
0.47uF
DCXO_32KEN
DCXO_32K
R1119
0R
VIO18_LC
R1108
0R
SRCLKENA
VTCXO28-1
R1111
0R
C1110
0.47uF
U1102
26M_MT6253_1_2X2.5
VIO18_LC
R1112
0R
SRCVOLTEN
VRF18-1
C1117
0.47uF
BSI1A_CS0
BSI1A_CLK
BSI1A_DATA0
BSI1A_DATA1
BSI1A_DATA2
CLK1_BB
CLK4_AUDIO
CLK3_WCN
R1146
R1166
100ohm

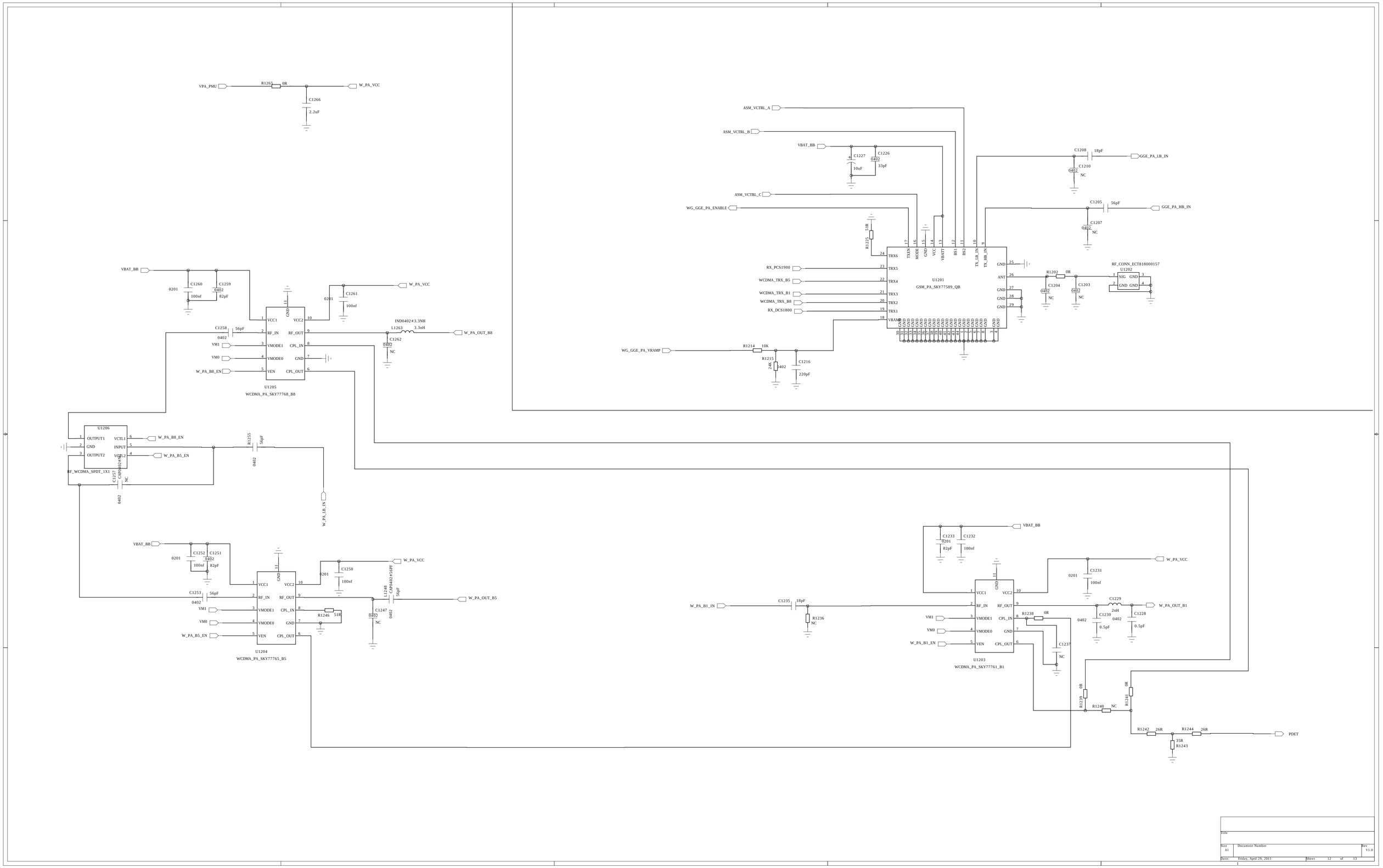

Title			
Size A1	Document Number		Rev V1.0
Date: Friday, April 29, 2011		Sheet 12 of 13	

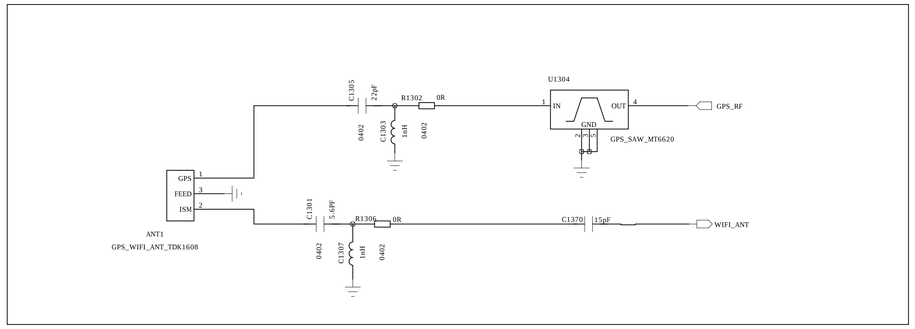
U1304
GPS_SAW_MT6620
GPS_RF
C1305 2.2pF
R1302 0R
C1303 1nH
ANT1
GPS_WIFI_ANT_TDK1608
GPS
FEED
ISM
C1301 5.6PF
R1306 0R
C1307 1nH
C1370 15pF
WIFI_ANT

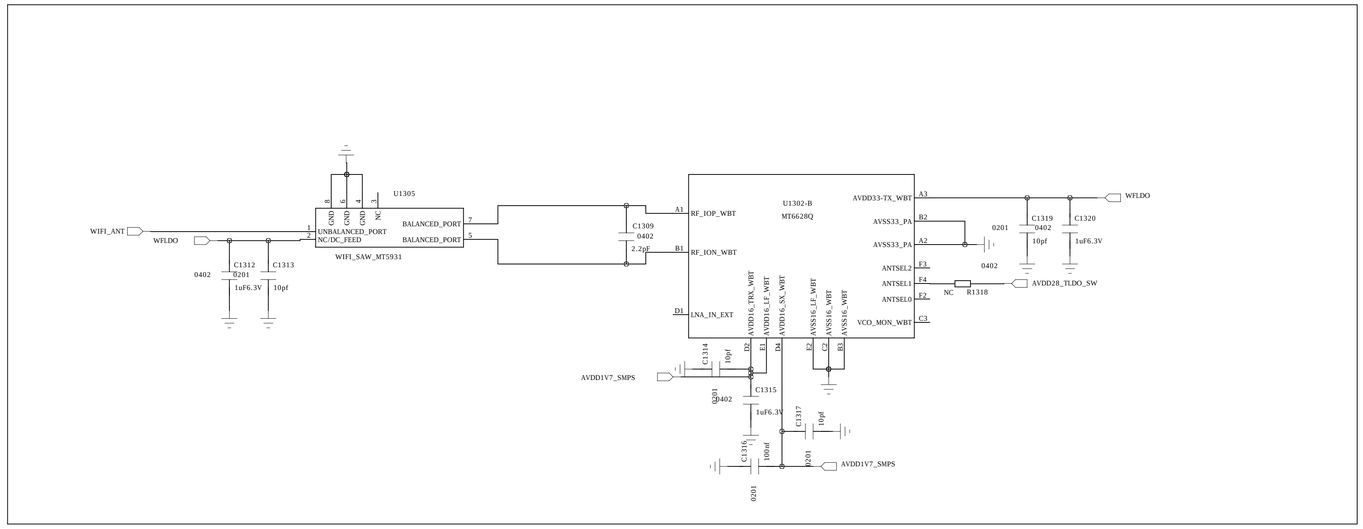
U1305
WIFI_SAW_MT5931
WIFI_ANT
WFLDO
UNBALANCED_PORT
NC/DC_FEED
BALANCED_PORT
C1312 1uF6.3V
C1313 10pf
C1309 2.2pF
U1302-B
MT6628Q
RF_IOP_WBT
RF_ION_WBT
LNA_IN_EXT
AVDD33-TX_WBT
AVSS33_PA
ANTSEL2
ANTSEL1
ANTSEL0
VCO_MON_WBT
C1319 10pf
C1320 1uF6.3V
R1318
AVDD28_TLDO_SW
AVDD1V7_SMPS
C1314 10pf
C1315 1uF6.3V
C1316 100nf
C1317 10pf

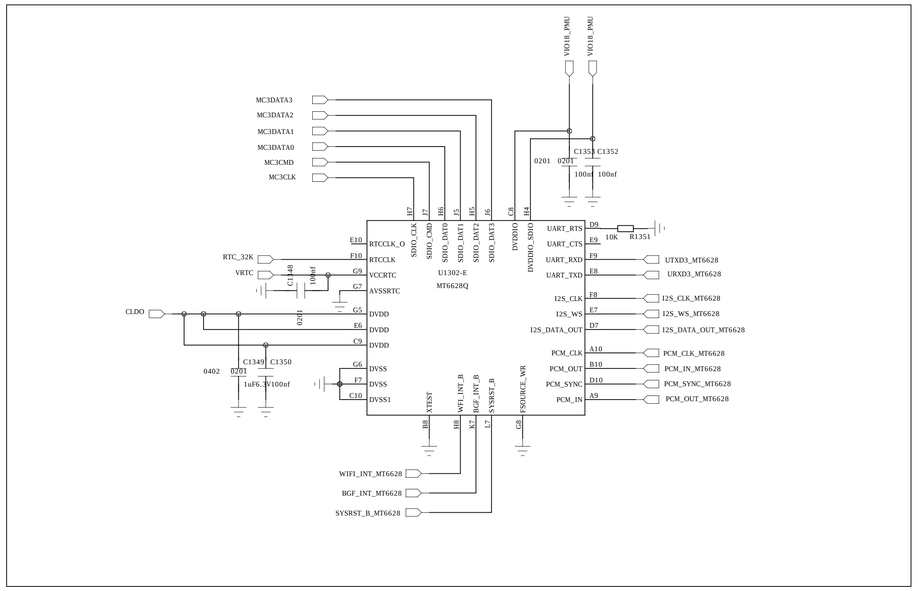
U1302-E
MT6628Q
MC3DATA3
MC3DATA2
MC3DATA1
MC3DATA0
MC3CMD
MC3CLK
VDD18_PMU
C1351 100nf
C1352 100nf
RTC_32K
VRTC
C1348 100nf
CLDO
C1349 1uF6.3V
C1350 100nf
RTCCLK_O
RTCCLK
VCCRTC
AVSSRTC
DVDD
DVSS
DVSS1
SDIO_CLK
SDIO_CMD
SDIO_DAT0
SDIO_DAT1
SDIO_DAT2
SDIO_DAT3
DVDDIO
DVDDIO_SDIO
UART_RTS
UART_CTS
UART_RXD
UART_TXD
I2S_CLK
I2S_WS
I2S_DATA_OUT
PCM_CLK
PCM_OUT
PCM_SYNC
PCM_IN
R1351 10K
UTXD3_MT6628
URXD3_MT6628
I2S_CLK_MT6628
I2S_WS_MT6628
I2S_DATA_OUT_MT6628
PCM_CLK_MT6628
PCM_IN_MT6628
PCM_SYNC_MT6628
PCM_OUT_MT6628
XTEST
WFI_INT_B
BGF_INT_B
SYSRST_B
FSOURCE_WR
WIFI_INT_MT6628
BGF_INT_MT6628
SYSRST_B_MT6628

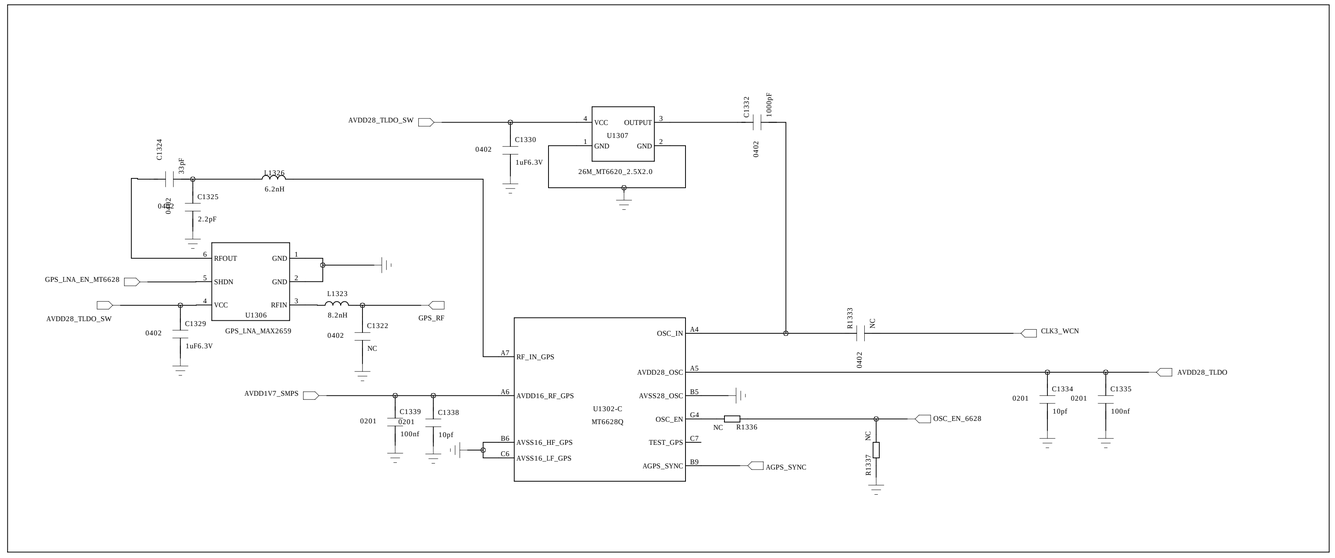
AVDD28_TLDO_SW
C1330 1uF6.3V
U1307
26M_MT6620_2.5X2.0
C1332 1000pF
C1324 33pF
L1326 6.2nH
C1325 2.2pF
RFOUT
SHDN
VCC
GND
RFIN
U1306
GPS_LNA_MAX2659
GPS_LNA_EN_MT6628
C1329 1uF6.3V
L1323 8.2nH
C1322 NC
GPS_RF
U1302-C
MT6628Q
RF_IN_GPS
AVDD16_RF_GPS
AVSS16_HF_GPS
AVSS16_LF_GPS
OSC_IN
AVDD28_OSC
AVSS28_OSC
OSC_EN
TEST_GPS
AGPS_SYNC
CLK3_WCN
AVDD28_TLDO
OSC_EN_6628
R1333 NC
R1336 NC
R1337 NC
C1334 10pf
C1335 100nf
AVDD1V7_SMPS
C1339 100nf
C1338 10pf

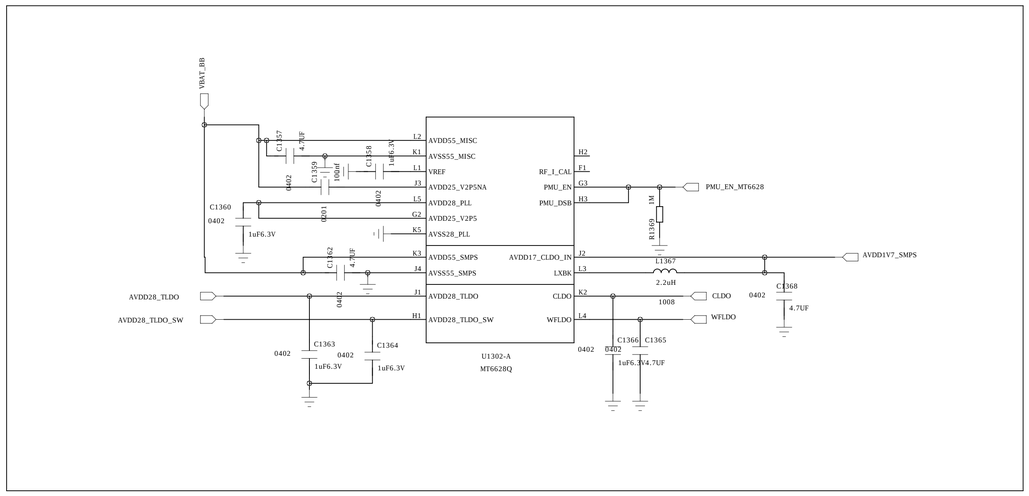
VBAT_BB
C1357 4.7UF
C1359 100nf
C1358 1uF6.3V
C1360 1uF6.3V
C1362 4.7UF
U1302-A
MT6628Q
AVDD55_MISC
AVSS55_MISC
VREF
AVDD25_V2P5NA
AVDD28_PLL
AVDD25_V2P5
AVSS28_PLL
AVDD55_SMPS
AVSS55_SMPS
AVDD28_TLDO
AVDD28_TLDO_SW
RF_I_CAL
PMU_EN
PMU_DSB
AVDD17_CLDO_IN
LXBK
CLDO
WFLDO
PMU_EN_MT6628
R1369 1M
L1367 2.2uH
AVDD1V7_SMPS
C1368 4.7UF
C1363 1uF6.3V
C1364 1uF6.3V
C1366 1uF6.3V
C1365 4.7UF

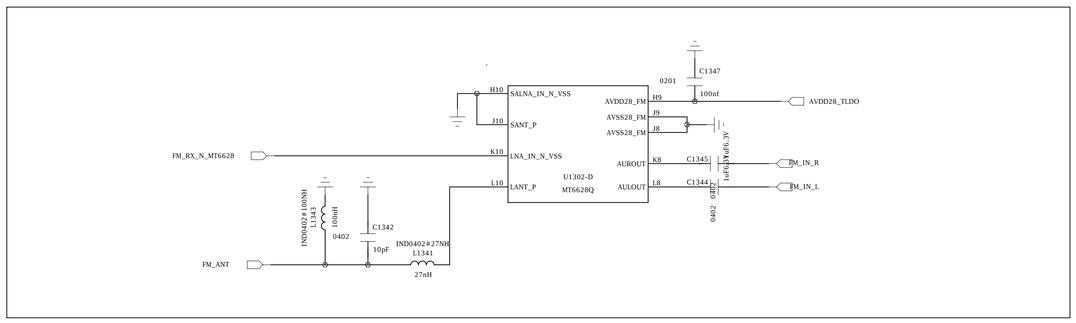
U1302-D
MT6628Q
SALNA_IN_N_VSS
SANT_P
LNA_IN_N_VSS
LANT_P
AVDD28_FM
AVSS28_FM
AUROUT
AULOUT
C1347 100nf
AVDD28_TLDO
FM_RX_N_MT6628
FM_IN_R
FM_IN_L
FM_ANT
IND0402#100NH L1343 100nH
C1342 10pF
IND0402#27NH L1341 27nH