1. ALL RESISTANCE VALUES ARE IN OHMS, 0.1 WATT +/- 5%.
2. ALL CAPACITANCE VALUES ARE IN MICROFARADS.
3. ALL CRYSTALS & OSCILLATOR VALUES ARE IN HERTZ.

| REV | ECN | DESCRIPTION OF REVISION | CK APPD / DATE |
|---|---|---|---|
| 8 | 0006532879 | ENGINEERING RELEASED | 2016-07-06 |

# D11 MLB - PVT

LAST_MODIFICATION=Wed Jul 6 08:55:26 2016


| PAGE | <CSA> | CONTENTS | SYNC | DATE |
|---|---|---|---|---|
| 1 | 1 | TABLE OF CONTENTS | <SYNC_MASTER1> | <SYNC_DATE1> |
| 2 | 2 | SYSTEM:BOM TABLES | <SYNC_MASTER2> | <SYNC_DATE2> |
| 3 | 3 | SYSTEM:EEEE CALLOUTS | <SYNC_MASTER3> | <SYNC_DATE3> |
| 4 | 4 | SYSTEM:MECHANICAL COMPONENTS | <SYNC_MASTER4> | <SYNC_DATE4> |
| 5 | 5 | SYSTEM: BOARDID | <SYNC_MASTER5> | <SYNC_DATE5> |
| 6 | 6 | spare | | |
| 7 | 7 | SOC:JTAG,USB,XTAL | | |
| 8 | 8 | SOC:PCIE | | |
| 9 | 9 | SOC:MIPI AND ISP | | |
| 10 | 10 | SOC:LPDP | | |
| 11 | 11 | SOC:SERIAL | | |
| 12 | 12 | SOC:GPIO & UART | | |
| 13 | 13 | SOC:AOP | | |
| 14 | 14 | SOC:POWER (1/3) | | |
| 15 | 15 | SOC:POWER (2/3) | | |
| 16 | 16 | SOC:POWER (3/3) | | |
| 17 | 17 | NAND | | |
| 18 | 18 | SYSTEM POWER:PMU (1/3) | | |
| 19 | 19 | SYSTEM POWER:PMU (2/3) | | |
| 20 | 20 | SYSTEM POWER:PMU (3/3) | | |
| 21 | 21 | SYSTEM POWER:CHARGER | | |
| 22 | 22 | SYSTEM POWER:BATTERY CONN | | |
| 23 | 23 | SYSTEM POWER:BOOST | | |
| 24 | 24 | SENSORS | | |
| 25 | 25 | B2B FILTERS: UTAH | | |
| 26 | 26 | CAMERA:STROBE DRIVER | | |
| 27 | 27 | Accessory: Buck Circuit | | <SYNC_DATE27> |
| 28 | 28 | TRINITY:FF SPECIFIC | | |
| 29 | 29 | B2B:FOREHEAD | | |
| 30 | 30 | B2B:NEVADA | | <SYNC_DATE30> |
| 31 | 31 | AUDIO:CALTRA CODEC (1/2) | | |
| 32 | 32 | AUDIO:CALTRA CODEC (2/2) | | |
| 33 | 33 | AUDIO:SPEAKER AMP 2 | | |
| 34 | 34 | AUDIO:SPEAKER AMP 1 | | |
| 35 | 35 | ARC:DRIVER | | |
| 36 | 36 | ARC:MAGGIE | | |
| 37 | 37 | DISPLAY & MESA:POWER | | |
| 38 | 38 | B2B:ORB & MESA | | |
| 39 | 39 | B2B FILTERS: DISPLAY & TOUCH | | |
| 40 | 40 | TRISTAR 2 | | |
| 41 | 41 | B2B:DOCK FLEX | | |
| 42 | 42 | spare | | |
| 43 | 43 | spare | | |
| 44 | 44 | B2B FILTERS: RIGHT BUTTON FLEX | | |
| 45 | 45 | B2B FF SPECIFIC | | |
| 46 | 46 | LARGE FORM FACTOR SPECIFIC | | <SYNC_DATE46> |
| 47 | 47 | I2C MAP: AP, TOUCH, HOMER, I2C5 | | |
| 48 | 48 | I2C MAP AOP | <SYNC_MASTER48> | <SYNC_DATE48> |
| 49 | 49 | I2C TABLE | <SYNC_MASTER49> | <SYNC_DATE49> |
| 50 | 50 | spare | <SYNC_MASTER50> | <SYNC_DATE50> |
| 51 | 51 | spare | <SYNC_MASTER51> | <SYNC_DATE51> |
| 52 | 52 | MLB UNIQUE | <SYNC_MASTER52> | <SYNC_DATE52> |
| 53 | 53 | CELL,WIFI,NFC | <SYNC_MASTER53> | <SYNC_DATE53> |
| 54 | 54 | page1 | | |
| 55 | 55 | NFC | | |
| 56 | 56 | page1 | | |
| 57 | 57 | METROCIRC [2] | | |
| 58 | 58 | UAT MATCH AND TUNER [3] | | |
| 59 | 59 | WIFI_MLB SCHEMATIC | | |
| 60 | 60 | PERENNIAL | | |
| 61 | 61 | WIFI FRONT-END [77] | | |
| 62 | 62 | page1 | | |
| 63 | 63 | BOM_OMIT_TABLE | | |
| 64 | 64 | PMU: CONTROL AND CLOCKS | | |
| 65 | 65 | PMU: SWITCHERS AND LDOS | | |
| 66 | 66 | BASEBAND: POWER2 | | |
| 67 | 67 | BASEBAND: CONTROL | | |
| 68 | 68 | BASEBAND GPIOS | | |
| 69 | 69 | TRANSCEIVER0/1: POWER | | |
| 70 | 70 | TRANSCEIVER0/1: TX PORTS | | |
| 71 | 71 | TRANSCEIVER0/1: PRX PORTS | <SYNC_MASTER71> | <SYNC_DATE71> |
| 72 | 72 | RECEIVE MATCHING | <SYNC_MASTER72> | <SYNC_DATE72> |
| 73 | 73 | LOWER ANTENNA & COUPLERS | <SYNC_MASTER73> | <SYNC_DATE73> |
| 74 | 74 | DIVERSITY RECEIVE ASM'S | <SYNC_MASTER74> | <SYNC_DATE74> |
| 75 | 75 | DIVERSITY RECEIVE LNA'S | d | |
| 76 | 76 | UPPER ANTENNA FEEDS | | |
| 77 | 77 | PMU: ET MODULATOR | | |
| 78 | <CSA_PAGE78> | TEST POINTS & BOOT CONFIG | <SYNC_MASTER78> | <SYNC_DATE78> |
| 79 | <CSA_PAGE79> | TDD TRANSMIT | <SYNC_MASTER79> | <SYNC_DATE79> |
| 80 | <CSA_PAGE80> | FDD TRANSMIT | <SYNC_MASTER80> | <SYNC_DATE80> |
| 81 | <CSA_PAGE81> | ICEFALL, SIM, DEBUG_CONN | <SYNC_MASTER81> | <SYNC_DATE81> |
| | <CSA_PAGE82> | | <SYNC_MASTER82> | <SYNC_DATE82> |
| | <CSA_PAGE83> | | <SYNC_MASTER83> | <SYNC_DATE83> |
| | <CSA_PAGE84> | | <SYNC_MASTER84> | <SYNC_DATE84> |
| | <CSA_PAGE85> | | <SYNC_MASTER85> | <SYNC_DATE85> |
| | <CSA_PAGE86> | | <SYNC_MASTER86> | <SYNC_DATE86> |
| | <CSA_PAGE87> | | <SYNC_MASTER87> | <SYNC_DATE87> |
| | <CSA_PAGE88> | | <SYNC_MASTER88> | <SYNC_DATE88> |
| | <CSA_PAGE89> | | <SYNC_MASTER89> | <SYNC_DATE89> |
| | <CSA_PAGE90> | | <SYNC_MASTER90> | <SYNC_DATE90> |


TABLE OF CONTENTS

Notebook Schematics.com

## Schematic & PCB Callouts

| PART# | QTY | DESCRIPTION | REFERENCE DESIGNATOR(S) | CRITICAL | BOM OPTION |
|---|---|---|---|---|---|
| 051-00482 | 1 | SCH,MLB,D11-12 | SCH | CRITICAL | ? |
| 820-00229 | 1 | PCBF,MLB,D11-12 | PCB | CRITICAL | ? |

SCH 051-00482
BRD 820-00229
MCO 056-01585

## System Block Diagram:

<rdar://problem/16684269>

TABLE OF CONTENTS

SYNC_MASTER=david-copy SYNC_DATE=03/01/2016

DRAWING TITLE: SCH,MLB,D11

Apple Inc.

DRAWING NUMBER: 051-00482 SIZE: D

REVISION: 8.0.0

BRANCH:

PAGE: 1 OF 53

SHEET: 1 OF 81

NOTICE OF PROPRIETARY PROPERTY:
THE INFORMATION CONTAINED HEREIN IS THE PROPRIETARY PROPERTY OF APPLE INC.
THE POSESSOR AGREES TO THE FOLLOWING:
I TO MAINTAIN THIS DOCUMENT IN CONFIDENCE
II NOT TO REPRODUCE OR COPY IT
III NOT TO REVEAL OR PUBLISH IT IN WHOLE OR PART
IV ALL RIGHTS RESERVED

# NAND BOM Options

| PART# | QTY | DESCRIPTION | REFERENCE DESIGNATOR(S) | CRITICAL | BOM OPTION |
|---|---|---|---|---|---|
| 335S00169 | 1 | NAND,H,32GB,16nm,MLC | U1701 | CRITICAL | NAND_32G |
| 335S00182 | 1 | NAND,H,128GB,16nm,TLC | U1701 | CRITICAL | NAND_128G |
| 335S00183 | 1 | NAND,T,256GB,3Dv3,TLC | U1701 | CRITICAL | NAND_256G |
| 138S0867 | 5 | CAP,X5R,10UF,20%,6.3V,0.65MM,HRZTL,0402 | C1748,C1713,C1716,C1721,C1733 | CRITICAL | NAND_32G |
| 138S00003 | 5 | CAP,X5R,15UF,20%,,6.3V,0.65MM,HRZTL,0402 | C1748,C1713,C1716,C1721,C1733 | CRITICAL | NAND_128G |
| 138S00003 | 5 | CAP,X5R,15UF,20%,,6.3V,0.65MM,HRZTL,0402 | C1748,C1713,C1716,C1721,C1733 | CRITICAL | NAND_256G |

| PART NUMBER | ALTERNATE FOR PART NUMBER | BOM OPTION | REF DES | COMMENTS: |
|---|---|---|---|---|
| 335S00201 | 335S00169 | ALTERNATE | U1701 | T,15nm,MLC,32GB |
| 335S00209 | 335S00169 | ALTERNATE | U1701 | S,16nm,MLC,32GB |
| 335S00195 | 335S00182 | ALTERNATE | U1701 | SS,1Ynm,TLC,128GB |
| 335S00180 | 335S00182 | ALTERNATE | U1701 | T,15nm,TLC,128GB |
| 335S00179 | 335S00182 | ALTERNATE | U1701 | SD,15nm,TLC,128GB |
| 335S00148 | 335S00183 | ALTERNATE | U1701 | SD,3Dv2,TLC,256GB |
| 335S00190 | 335S00183 | ALTERNATE | U1701 | SS,3Dv3,TLC,256GB |

#22686038:See Radar

# Magnesium Alternates

| PART NUMBER | ALTERNATE FOR PART NUMBER | BOM OPTION | REF DES | COMMENTS: |
|---|---|---|---|---|
| 338S00173 | 338S00203 | ALTERNATE | U2402 | Larger Wafer (~29 flow) Magnesium |

# UT LDO Alternates

| PART NUMBER | ALTERNATE FOR PART NUMBER | BOM OPTION | REF DES | COMMENTS: |
|---|---|---|---|---|
| 353S00889 | 353S00015 | ALTERNATE | U2501 | ST, LDO REG, 2.925V, CSP 0.65x0.65 |

# Mamba LDO Alternates

| PART NUMBER | ALTERNATE FOR PART NUMBER | BOM OPTION | REF DES | COMMENTS: |
|---|---|---|---|---|
| 353S00932 | 353S00576 | ALTERNATE | U3801 | ST, LDO REG, 2.75V |

# I2C5 Alternate

| PART NUMBER | ALTERNATE FOR PART NUMBER | BOM OPTION | REF DES | COMMENTS: |
|---|---|---|---|---|
| 335S00234 | 335S00233 | ALTERNATE | U1101 | I2C5 ALTERNATE |

# Active Diode Alternate

| PART NUMBER | ALTERNATE FOR PART NUMBER | BOM OPTION | REF DES | COMMENTS: |
|---|---|---|---|---|
| 376S00106 | 376S00047 | ALTERNATE | Q2101 | DIODES INC. ACT DIODE |

# DDR PLL Alternate

| PART NUMBER | ALTERNATE FOR PART NUMBER | BOM OPTION | REF DES | COMMENTS: |
|---|---|---|---|---|
| 155S00095 | 155S00068 | ALTERNATE | FL1501 | FERR BD,1000OHM,25%,100MA,2DHM,0100S |

# Power Inductor Alternates

| PART NUMBER | ALTERNATE FOR PART NUMBER | BOM OPTION | REF DES | COMMENTS: | |
|---|---|---|---|---|---|
| 152S00118 | 152S00075 | ALTERNATE | ALL | IND,PWR,SHLD,1.2 UH,3.0A,0.080 OHM,2016 | |
| 152S00077 | 152S00397 | ALTERNATE | ALL | IND,PWR,SHLD,1.0 UH,2.25A,0.150 OHM,2016 | updated 11/12 |
| 152S00121 | 152S00081 | ALTERNATE | ALL | IND,PWR,SHLD,0.47 UH,3.8A,0.048 OHM,2012 | |
| 152S00123 | 152S1936 | ALTERNATE | ALL | IND,PWR,SHLD,15 UH,0.72A,0.900 OHM,3225 | |
| 152S00402 | 152S00366 | ALTERNATE | ALL | IND,MULT,33N,1.2A,0.320 OHM,0603 | updated 11/12 |
| 152S00297 | 152S1843 | ALTERNATE | ALL | CYNTEC 2012 33N | reverted 11/13 |
| 152S00365 | 152S00297 | ALTERNATE | ALL | CYNTEC 2012 33N | |
| 152S00398 | 152S00204 | ALTERNATE | ALL | IND,PWR,0.22UH,20%,6.7A,23MOHM,2012 | For Chestnut inductor; so it doesn't interfere with PMU inducotr Buck 7 alts |
| 152S00120 | 152S00077 | ALTERNATE | ALL | For Chestnut inductor only | Except BUCK5 LX (BUCK5 LX is Taiyo only) |
| 152S00117 | 152S00074 | ALTERNATE | ALL | IND,PWR,SHLD,1.0 UH,3.0A,0.060 OHM,2016 | |

# Global R/C Alternates

| PART NUMBER | ALTERNATE FOR PART NUMBER | BOM OPTION | REF DES | COMMENTS: |
|---|---|---|---|---|
| 118S0764 | 118S0717 | ALTERNATE | ALL | RES, 3.92K, 0.1%, 0201 |
| 138S0702 | 138S0657 | ALTERNATE | ALL | CAP, X5R, 4.3UF, 4V, 0610 |
| 138S00006 | 138S0835 | ALTERNATE | ALL | CAP, 3-TERM, 4.3UF, 4V, 0402 |
| 138S0648 | 138S0652 | ALTERNATE | ALL | CAP,X5R,4.7UF,6.3V,0.65MM,0402,TAIYO |
| 132S0400 | 132S0436 | ALTERNATE | ALL | CAP,X5R,0.22UF,6.3V,0100S,TDK |
| 138S00024 | 138S0986 | ALTERNATE | ALL | CAP,CER,3.750%,7.5UF,20%,4V,0402,TAIYO/TDK |
| 138S0706 | 138S0739 | ALTERNATE | ALL | CAP,CER,1UF,20%,10V,X5R,0201,MURATA |
| 138S0945 | 138S0739 | ALTERNATE | ALL | CAP,CER,1UF,20%,10V,X5R,0201,KYOCERA |
| 132S0436 | 132S0400 | ALTERNATE | ALL | CAP,CER,X5R,0.22UF,20%,6.3V,20% |

# Global Ferrite Alternates

| PART NUMBER | ALTERNATE FOR PART NUMBER | BOM OPTION | REF DES | COMMENTS: |
|---|---|---|---|---|
| 155S00067 | 155S0581 | ALTERNATE | ALL | FERR, 240OHM, 0.38OHM DCR, 0201 |
| 155S0581 | 155S00067 | ALTERNATE | ALL | FERR, 240OHM, 0.38OHM DCR, 0201 |
| 155S00012 | 155S00168 | ALTERNATE | ALL | FLTR, 65 OHMS, 0605 |
| 155S00194 | 155S0610 | ALTERNATE | ALL | FERR BD, 150OHM, TDK |
| 155S00200 | 155S0610 | ALTERNATE | ALL | FERR BD, 150OHM, TY |
| 152S00489 | 152S00456 | ALTERNATE | ALL | FERR BD, 0.47UH, TY |

# Global Varistor Alternates

| PART NUMBER | ALTERNATE FOR PART NUMBER | BOM OPTION | REF DES | COMMENTS: |
|---|---|---|---|---|
| 377S0168 | 377S0140 | ALTERNATE | ALL | VARISTOR, 6.8V, 180PF, 01005 |

# Acc Buck Alternates

| PART NUMBER | ALTERNATE FOR PART NUMBER | BOM OPTION | REF DES | COMMENTS: |
|---|---|---|---|---|
| 371S00087 | 371S00064 | ALTERNATE | D2700 | DIODE,SHOTTKY,30V,200MA,0201 |
| 152S00558 | 152S00557 | ALTERNATE | L2700 | IND,MLD,0.47UH,2.5A,80MOhm,1608 |
| 376S00166 | 376S00164 | ALTERNATE | Q2700,Q2701 | PFET,12V,CSP4 |

# Load Switch OMIT TABLE

| PART# | QTY | DESCRIPTION | REFERENCE DESIGNATOR(S) | CRITICAL | BOM OPTION |
|---|---|---|---|---|---|
| 353S01007 | 1 | ONSEMI,IC,LOAD,SWITCH,WLCSP4 | U2710,NFCSW_RF | CRITICAL | |

# N&V 15uF Cap Alternates

| PART NUMBER | ALTERNATE FOR PART NUMBER | BOM OPTION | REF DES | COMMENTS: | |
|---|---|---|---|---|---|
| 138S00005 | 138S00003 | ALTERNATE | C1010, C1025, C1031 | CAP,X5R,15UF,6.3V,0.65MM,0402,TY | CPU |
| 138S00005 | 138S00003 | ALTERNATE | C1037, C1041, C1044 | CAP,X5R,15UF,6.3V,0.65MM,0402,TY | |
| 138S00005 | 138S00003 | ALTERNATE | C1010, C1025, C1031 | CAP,X5R,15UF,6.3V,0.65MM,0402,TY | |
| 138S00005 | 138S00003 | ALTERNATE | C1038, C1043, C1046 | CAP,X5R,15UF,6.3V,0.65MM,0402,TY | |
| 138S00005 | 138S00003 | ALTERNATE | C1101, C1105, C1154 | CAP,X5R,15UF,6.3V,0.65MM,0402,TY | |
| 138S00005 | 138S00003 | ALTERNATE | C1013, C1020, C1027 | CAP,X5R,15UF,6.3V,0.65MM,0402,TY | GPU + GPU_SRAM |
| 138S00005 | 138S00003 | ALTERNATE | C1033, C1035, C1091 | CAP,X5R,15UF,6.3V,0.65MM,0402,TY | |
| 138S00005 | 138S00003 | ALTERNATE | C1014, C1021, C1028 | CAP,X5R,15UF,6.3V,0.65MM,0402,TY | |
| 138S00005 | 138S00003 | ALTERNATE | C1034, C1066, C1141 | CAP,X5R,15UF,6.3V,0.65MM,0402,TY | |
| 138S00005 | 138S00003 | ALTERNATE | C1106, C1016 | CAP,X5R,15UF,6.3V,0.65MM,0402,TY | |
| 138S00048 | 138S00003 | ALTERNATE | ALL | CAP,X5R,15UF,6.3V,0.65MM,0402,KYOCERA | |

NotebookSolutions.com

PAGE TITLE

SYSTEM:BOM TABLES

Apple Inc.

DRAWING NUMBER 051-00482

SIZE D

REVISION 8.0.0

BRANCH

PAGE 2 OF 53

SHEET 2 OF 81

NOTICE OF PROPRIETARY PROPERTY:

THE INFORMATION CONTAINED HEREIN IS THE PROPRIETARY PROPERTY OF APPLE INC.
THE POSESSOR AGREES TO THE FOLLOWING:
I TO MAINTAIN THIS DOCUMENT IN CONFIDENCE
II NOT TO REPRODUCE OR COPY IT
III NOT TO REVEAL OR PUBLISH IT IN WHOLE OR PART
IV ALL RIGHTS RESERVED

# D11 EEEE CALLOUTS

| PART# | QTY | DESCRIPTION | REFERENCE DESIGNATOR(S) | CRITICAL | BOM OPTION |
|---|---|---|---|---|---|
| 825-6838 | 1 | EEEE CODE FOR 639-01812 | EEEE_GY2T | CRITICAL | EEEE_D11_BEST_JP |
| 825-6838 | 1 | EEEE CODE FOR 639-01813 | EEEE_GY2V | CRITICAL | EEEE_D11_SUPREME_JP |
| 825-6838 | 1 | EEEE CODE FOR 639-01814 | EEEE_GY2W | CRITICAL | EEEE_D11_EXTREME_JP |
| 825-6838 | 1 | EEEE CODE FOR 639-02138 | EEEE_H3RN | CRITICAL | EEEE_D11_BEST_ROW |
| 825-6838 | 1 | EEEE CODE FOR 639-02139 | EEEE_H3RP | CRITICAL | EEEE_D11_SUPREME_ROW |
| 825-6838 | 1 | EEEE CODE FOR 639-02140 | EEEE_H3RQ | CRITICAL | EEEE_D11_EXTREME_ROW |
| 825-6838 | 1 | EEEE CODE FOR 639-02460 | EEEE_H8C1 | CRITICAL | EEEE_D11_BEST_CH |
| 825-6838 | 1 | EEEE CODE FOR 639-02465 | EEEE_H8CK | CRITICAL | EEEE_D11_SUPREME_CH |
| 825-6838 | 1 | EEEE CODE FOR 639-02462 | EEEE_H8C3 | CRITICAL | EEEE_D11_EXTREME_CH |

## CAYMAN DDR Alternates

| | | | | |
|---|---|---|---|---|
| 339S00258 | 339S00257 | ALTERNATE | ALL | DDR-S, 3G, B1 |

## CAYMAN OMIT TABLE

| PART# | QTY | DESCRIPTION | REFERENCE DESIGNATOR(S) | CRITICAL | BOM OPTION |
|---|---|---|---|---|---|
| 339S00257 | 1 | CAYMAN, DDR-H, 3G, B1 | U0700 | CRITICAL | |

## 2.2uF CAP Alts

| PART NUMBER | ALTERNATE FOR PART NUMBER | BOM OPTION | REF DES | COMMENTS: |
|---|---|---|---|---|
| 138S00049 | 138S00032 | ALTERNATE | ALL | CAP,CER,X5R,2.2UF,20%6.3V,20%, KYOCERA |
| 138S0831 | 138S00032 | ALTERNATE | ALL | CAP,CER,X5R,2.2UF,20%,6.3V,20%,MURATA |

## SIP Alternates

| PART NUMBER | ALTERNATE FOR PART NUMBER | BOM OPTION | REF DES | COMMENTS: |
|---|---|---|---|---|
| 339M00009 | 339M00003 | ALTERNATE | ALL | TRINITY BLUE,STATS |
| 339M00008 | 339M00002 | ALTERNATE | ALL | NEO,STATS |

NotebookSchematics.com

SYNC_MASTER=david-copy SYNC_DATE=03/01/2016

PAGE TITLE
SYSTEM:EEEE CALLOUTS

Apple Inc.

DRAWING NUMBER 051-00482 SIZE D
REVISION 8.0.0
BRANCH
PAGE 3 OF 53
SHEET 3 OF 81

NOTICE OF PROPRIETARY PROPERTY:
THE INFORMATION CONTAINED HEREIN IS THE PROPRIETARY PROPERTY OF APPLE INC.
THE POSESSOR AGREES TO THE FOLLOWING:
I TO MAINTAIN THIS DOCUMENT IN CONFIDENCE
II NOT TO REPRODUCE OR COPY IT
III NOT TO REVEAL OR PUBLISH IT IN WHOLE OR PART
IV ALL RIGHTS RESERVED

# Current as of D11 MCO 056-01585 rev. 63

0 0 Contained in radio_mlb pages

BS0415 2.70R1.80-NSP — UP_RFFE

BS0401 2.70R1.80-NSP — CHASSIS_GND_BS401

BS0402 STDOFF-2.90D0.888H-SM — CHASSIS_GND_BS402

BS0403 STDOFF-2.90D0.81H-SM — CHASSIS_GND_BS403

PTH per Rev63 for 1.8mm Drill

NEO Stiffener

0 — NORTH SCREW EXPOSED — #25046211

C0413 220PF 5% 10V C0G-CERM 01005
C0414 56PF 5% 25V NP0-C0G-CERM 01005
C0415 18PF 2% 16V CERM 01005
C0416 4PF +/-0.1PF 16V NP0-C0G 01005

CHASSIS_GND_BS401
C0401 220PF 5% 10V C0G-CERM 01005
C0402 220PF 5% 10V C0G-CERM 01005
C0403 100PF 5% 16V NP0-C0G 01005
C0404 56PF 5% 25V NP0-C0G-CERM 01005
C0405 18PF 2% 16V CERM 01005
C0406 4PF +/-0.1PF 16V NP0-C0G 01005

CHASSIS_GND_BS402
C0407 220PF 5% 10V C0G-CERM 01005
C0408 220PF 5% 10V C0G-CERM 01005
C0409 100PF 5% 16V NP0-C0G 01005
C0410 56PF 5% 25V NP0-C0G-CERM 01005
C0411 18PF 2% 16V CERM 01005
C0412 4PF +/-0.1PF 16V NP0-C0G 01005

CHASSIS_GND_BS403
C0417 220PF 5% 10V C0G-CERM 01005
C0418 220PF 5% 10V C0G-CERM 01005
C0419 100PF 5% 16V NP0-C0G 01005
C0420 56PF 5% 25V NP0-C0G-CERM 01005
C0421 18PF 2% 16V CERM 01005
C0422 4PF +/-0.1PF 16V NP0-C0G 01005

## Front Shields

SH0401 SM — SHLD-UP-FRT-D11

SH0403 SM — SHLD-LOWER-FRT-D11

BS0404 2.70R1.80-NSP

## Back Shields

SH0400 SM — SHLD-SOFT-UP-BK-D11

SH0402 SM — SHLD-SOFT-LOWER-BK-D11

BS0405 STDOFF-2.90D0.888H-SM

BS0406 STDOFF-2.90D1.9ID-0.85H-SM

CLIP-COAX-RETENTION-D11 — CL0401 SM

## TESTPOINTS

### POWER

TP0420 — POWER GROUND

PP5V0_USB — TP0421 — VBUS

PP_BATT_VCC — TP0415 — VBATT

TP0422

PP_VDD_MAIN — TP0408 — VDD_MAIN

FD0408 FID 0P5SM1P0SQ-NSP — Note: Fiducial used as test point

### LCM

| | | |
|---|---|---|
| PP_LCM_BL_CAT1_CONN | TP0409 | LCM BACKLIGHT SINK1 |
| PP_LCM_BL_CAT2_CONN | TP0410 | LCM BACKLIGHT SINK2 |
| PP_LCM_BL_ANODE_CONN | TP0411 | LCM BACKLIGHT SOURCE |
| PP_LCM_BL34_CAT1_CONN | TP0417 | LCM BACKLIGHT SINK3 |
| PP_LCM_BL34_CAT2_CONN | TP0419 | LCM BACKLIGHT SINK4 |
| PP_LCM_BL34_ANODE_CONN | TP0418 | LCM BACKLIGHT SOURCE (3/4) |

### DFU

PMU_TO_AP_FORCE_DFU — TP0414 — FORCE DFU

### E75

| | | |
|---|---|---|
| 90_TRISTAR_DP1_CONN_P | TP0402 | |
| 90_TRISTAR_DP1_CONN_N | TP0403 | |
| 90_TRISTAR_DP2_CONN_P | TP0404 | |
| 90_TRISTAR_DP2_CONN_N | TP0405 | |
| PP_TRISTAR_ACC1 | TP0406 | ACCESSORY ID AND POWER |
| PP_TRISTAR_ACC2 | TP0407 | |

TP0416 — TP IS TO HELP WITH USB SI IN THE FACTORY FIXTURE.

TRISTAR_CON_DETECT_L — TP0412 — FOR DIAGS

### AMUX

PMU_AMUX_AY — TP0413 — ANALOG MUX A OUTPUT

#25244799 100k to 200k — R0413 200K 1% 1/32W MF 01005

PMU_AMUX_BY — TP0423 — ANALOG MUX B OUTPUT
Note: Fiducial used as test point

### MOJAVE

MESA_TO_BOOST_EN — TP0400

PP16V0_MESA — TP0401

## FIDUCIALS

FD0410 FID 0P5SM1P0SQ-NSP — ROOM=ASSEMBLY
FD0409 FID 0P5SM1P0SQ-NSP — ROOM=ASSEMBLY
FD0405 FID 0P5SM1P0SQ-NSP — ROOM=ASSEMBLY
FD0406 FID 0P5SQ-SMP3SQ-NSP — ROOM=ASSEMBLY
FD0404 FID 0P5SQ-SMP3SQ-NSP — ROOM=ASSEMBLY
FD0403 FID 0P5SQ-SMP3SQ-NSP — ROOM=ASSEMBLY
FD0402 FID 0P5SQ-SMP3SQ-NSP — ROOM=ASSEMBLY
FD0401 FID 0P5SQ-SMP3SQ-NSP — ROOM=ASSEMBLY
FD0400 FID 0P5SQ-SMP3SQ-NSP — ROOM=ASSEMBLY
FD0407 FID 0P5SM1P05Q-NSP — ROOM=TEST
FD0411 FID 0P5SQ-SMP3SQ-NSP

Notebookschematics.com

PAGE TITLE: SYSTEM:MECHANICAL COMPONENTS

Apple Inc.

DRAWING NUMBER 051-00482 | SIZE D
REVISION 8.0.0
BRANCH
PAGE 4 OF 53
SHEET 4 OF 81

NOTICE OF PROPRIETARY PROPERTY:
THE INFORMATION CONTAINED HEREIN IS THE PROPRIETARY PROPERTY OF APPLE INC.
THE POSESSOR AGREES TO THE FOLLOWING:
I TO MAINTAIN THIS DOCUMENT IN CONFIDENCE
II NOT TO REPRODUCE OR COPY IT
III NOT TO REVEAL OR PUBLISH IT IN WHOLE OR PART
IV ALL RIGHTS RESERVED

TOP SIDE

# BOOTSTRAPPING:BOARD REV
# BOARD ID
# BOOT CONFIG

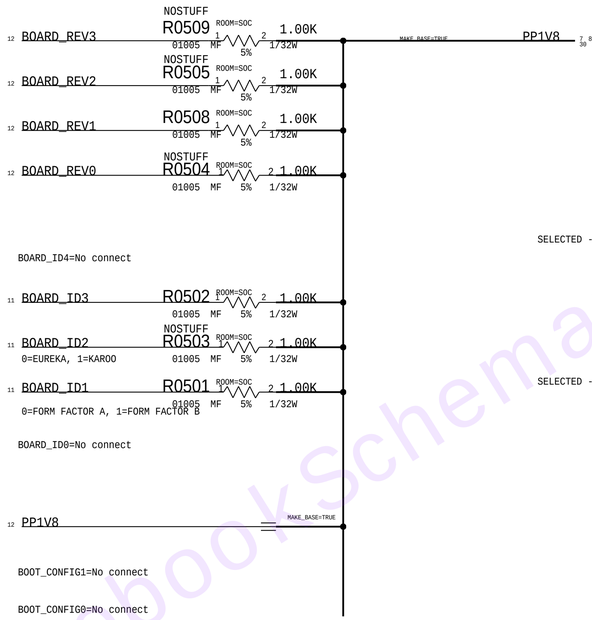


BOARD_REV[3:0]
FLOAT=LOW, PULLUP=HIGH

| | | |
|---|---|---|
| | 1111 | Pre-Proto w/D520 (non enclosure) |
| | 1110 | PROTO1 |
| | 1101 | PROTO2 |
| | 1100 | PROTO2.5 |
| | 1011 | EVT |
| | xxxx | SPARE |
| | 1000 | CARRIER |
| | xxxx | SPARE |
| SELECTED --> | 0010 | DVT |
| | xxxx | SPARE |
| | 0000 | PVT |

BOARD_ID[4:0]
FLOAT=LOW, PULLUP=HIGH

| | | |
|---|---|---|
| | 01000 | D10 MLB |
| | 01001 | D10 DEV |
| SELECTED --> | 01010 | D11 MLB |
| | 01011 | D11 DEV |
| | 01100 | D101 MLB |
| | 01101 | D101 DEV |
| | 01110 | D111 MLB |
| | 01111 | D111 DEV |

0=MLB, 1=DEV
0=FORM FACTOR A, 1=FORM FACTOR B
0=EUREKA, 1=KAROO

BOOT_CONFIG[2:0]
FLOAT=LOW, PULLUP=HIGH

| | | |
|---|---|---|
| | 000 | SPI0 |
| | 001 | SPI0 TEST MODE |
| | 010 | NVME0_X2 |
| | 011 | NVME0 X2 TEST |
| SELECTED --> | 100 | NVME0 X1 |
| | 101 | NVME0 X1 TEST |
| | 110 | SLOW SPI0 TEST |
| | 111 | FAST SPI0 TEST |

Notebookschematics.com

SYNC_MASTER=david-copy SYNC_DATE=03/01/2016

PAGE TITLE
SYSTEM: BOARDID

Apple Inc.

DRAWING NUMBER 051-00482 SIZE D
REVISION 8.0.0
BRANCH
PAGE 5 OF 53
SHEET 5 OF 81

NOTICE OF PROPRIETARY PROPERTY:
THE INFORMATION CONTAINED HEREIN IS THE PROPRIETARY PROPERTY OF APPLE INC.
THE POSESSOR AGREES TO THE FOLLOWING:
I TO MAINTAIN THIS DOCUMENT IN CONFIDENCE
II NOT TO REPRODUCE OR COPY IT
III NOT TO REVEAL OR PUBLISH IT IN WHOLE OR PART
IV ALL RIGHTS RESERVED

NotebookSchematics.com

PAGE TITLE

spare

Apple Inc.

DRAWING NUMBER 051-00482

SIZE D

REVISION 8.0.0

BRANCH

PAGE 6 OF 53

SHEET 6 OF 81

NOTICE OF PROPRIETARY PROPERTY:

THE INFORMATION CONTAINED HEREIN IS THE PROPRIETARY PROPERTY OF APPLE INC.
THE POSESSOR AGREES TO THE FOLLOWING:
I TO MAINTAIN THIS DOCUMENT IN CONFIDENCE
II NOT TO REPRODUCE OR COPY IT
III NOT TO REVEAL OR PUBLISH IT IN WHOLE OR PART
IV ALL RIGHTS RESERVED

# SOC - USB, JTAG, XTAL

VDD18_USB: 1.71-1.89V @20mA MAX

PP1V8

C0700 0.1UF 20% 2 6.3V X5R-CERM 01005 ROOM=SOC

VDD11_XTAL:1.06-1.17V @TBD mA MAX

FL0700 240-OHM-25%-0.20A-0.9DCR 01005 ROOM=SOC

PP1V1_XTAL

C0704 0.1UF 20% 2 6.3V X5R-CERM 01005 ROOM=SOC

PP1V1

C0705 2.2UF 20% 2 6.3V X5R-CERM 0201-1 ROOM=SOC

PP3V3_USB

3.14-3.46V @20mA MAX

C0701 0.1UF 20% 2 6.3V X5R-CERM 01005 ROOM=SOC

VDD18_AMUX: 1.62-1.98V @1mA MAX

PP1V8

CKPLUS_WAIVE=PWRTERM2GND

PP0V9_SOC_FIXED

tbd - tbd V @5mA MAX

U0700
CAYMAN-2GB-20NM-DDR-M
CSP
SYM 1 OF 16

CL20 VDD12_UH1_HSIC0
AJ60 VDD18_AMUX
CE25 VDD18_USB
CG50 VDD11_XTAL
CG26 VDD33_USB
CC25 VDD_FIXED_USB

CM22 UH1_HSIC0_DATA (NC)
CM20 UH1_HSIC0_STB (NC)

ANALOGMUX_OUT N64 AP_TO_PMU_AMUX_OUT

USB_DP CM26 90_USB_AP_DATA_P
USB_DM CL26 90_USB_AP_DATA_N

OMIT_TABLE

USB_VBUS CH26 USB_VBUS_DETECT

USB_ID CJ26 NC

USB_REXT CK26 AP_USB_REXT

R0700 200 1% 1/32W MF 01005 ROOM=SOC

Dev ONLY

CL31 JTAG_SEL
CL29 JTAG_TRST* (NC)
CJ37 JTAG_TDO (NC)
CJ35 JTAG_TDI (NC)
CK33 JTAG_TMS (NC)
CH37 JTAG_TCK (NC)

SWD_DOCK_BI_AP_SWDIO
SWD_DOCK_TO_AP_SWCLK

CM14 COLD_RESET*
PMU_TO_SYSTEM_COLD_RESET_L

BJ3 CFSB
PMU_TO_AOP_TRISTAR_ACTIVE_READY

BJ2 TST_CLKOUT
AP_TO_PMU_TEST_CLKOUT

BL65 S3E_RESET*
AP_TO_NAND_RESET_L

PP0701 P2MM-NSM SM (PP)

BJ4 HOLD_RESET

BL3 TESTMODE

WDOG CK35 AP_TO_PMU_WDOG_RESET

XI0 CM42 XTAL_AP_24M_IN
XO0 CL42 XTAL_AP_24M_OUT

R0701 511K 1% 1/32W MF 01005 ROOM=SOC

R0702 0.00 0% 1/32W MF 01005 ROOM=SOC

SOC_24M_O

CRITICAL
ROOM=SOC
Y0700
1.60X1.20MM-SM
24.000MHZ-30PPM-9.5PF-60OHM

C0702 12PF 5% 16V C0G 01005 ROOM=SOC

C0703 12PF 5% 16V C0G 01005 ROOM=SOC

NotebookSchematics.com

PAGE TITLE
SOC:JTAG,USB,XTAL

Apple Inc.

DRAWING NUMBER 051-00482
SIZE D
REVISION 8.0.0
BRANCH
PAGE 7 OF 53
SHEET 7 OF 81

NOTICE OF PROPRIETARY PROPERTY:
THE INFORMATION CONTAINED HEREIN IS THE PROPRIETARY PROPERTY OF APPLE INC.
THE POSESSOR AGREES TO THE FOLLOWING:
I TO MAINTAIN THIS DOCUMENT IN CONFIDENCE
II NOT TO REPRODUCE OR COPY IT
III NOT TO REVEAL OR PUBLISH IT IN WHOLE OR PART
IV ALL RIGHTS RESERVED

# SOC - PCIE INTERFACES

R0804 0.00 1/32W MF 01005 ROOM=SOC
VDD12_PCIE_REFBUF:1.08-1.26V @40mA MAX
PP1V2_SOC_PCIE_REFBUF
C0802 0.1UF 20% 6.3V X5R-CERM 01005 ROOM=SOC

VDD_FIXED_PCIE_xxx:0.855-0.990V @225mA MAX
PP0V9_SOC_FIXED 7 9 18 15 18
R0803 0.00 1/32W MF 01005 ROOM=SOC
C0803 0.1UF 20% 6.3V X5R-CERM 01005 ROOM=SOC
C0800 1.0UF 20% 6.3V X5R 0201-1 ROOM=SOC
C0806 2.2UF 20% 6.3V X5R-CERM 0201-1 ROOM=SOC
PP0V9_SOC_FIXED_PCIE_REFBUF
C0804 0.1UF 20% 6.3V X5R-CERM 01005 ROOM=SOC

19 16 10 PP1V2_SOC
VDD12_PCIE: 1.14-1.26V @10mA MAX
C0805 2.2UF 20% 6.3V X5R-CERM 0201-1 ROOM=SOC
C0801 0.1UF 20% 6.3V X5R-CERM 01005 ROOM=SOC

CE58 VDD12_PCIE
CC49 CE49 VDD12_PCIE_REFBUF
CA55 CA60 VDD_FIXED_PCIE_CLK
CC53 CC62 CE55 CE60 VDD_FIXED_PCIE_ANA
BW55 CC47 VDD_FIXED_PCIE_REFBUF

PP1V8 5 7 9 11 12 13 16 17 18 25 29 30 39 46 47 48 52
R0805 100K 5% 1/32W MF 01005 ROOM=SOC

U0700
CAYMAN-2GB-20NM-DDR-M
CSP
SYM 2 OF 16

PCIE_NAND_BI_AP_CLKREQ_L → BC64 PCIE_CLKREQ0*
90_PCIE_AP_TO_NAND_REFCLK_P → CJ48 PCIE_REF_CLK0_P
90_PCIE_AP_TO_NAND_REFCLK_N → CK48 PCIE_REF_CLK0_N

#24557655:replace with 20% caps. SI no negative impact
C0807 0.22UF 20% 6.3V X5R 01005 ROOM=SOC GND_VOID=TRUE
C0808 0.22UF 20% 6.3V X5R 01005 ROOM=SOC GND_VOID=TRUE
90_PCIE_NAND_TO_AP_RXD_P → 90_PCIE_NAND_TO_AP_RXD_C_P → CM46 PCIE_RX0_P
90_PCIE_NAND_TO_AP_RXD_N → 90_PCIE_NAND_TO_AP_RXD_C_N → CL46 PCIE_RX0_N

D10 NAND is now Gen3 (was Gen2). Caps intentionally 0.22uF
C0809 0.22UF 20% 6.3V X5R 01005 ROOM=SOC GND_VOID=TRUE
C0810 0.22UF 20% 6.3V X5R 01005 ROOM=SOC GND_VOID=TRUE
90_PCIE_AP_TO_NAND_TXD_P → 90_PCIE_AP_TO_NAND_TXD_C_P → CK44 PCIE_TX0_P
90_PCIE_AP_TO_NAND_TXD_N → 90_PCIE_AP_TO_NAND_TXD_C_N → CJ44 PCIE_TX0_N

PCIE_AP_TO_NAND_RESET_L → BJ65 PCIE_PERST0*
R0802 100K 5% 1/32W MF 01005 ROOM=SOC

NC BG66 PCIE_CLKREQ1*
NC CL54 PCIE_REF_CLK1_P
NC CM54 PCIE_REF_CLK1_N
NC CK52 PCIE_RX1_P
NC CJ52 PCIE_RX1_N
NC CM50 PCIE_TX1_P
NC CL50 PCIE_TX1_N
NC BG64 PCIE_PERST1*

CH57 PCIE_EXT_REF_CLK_P
CG57 PCIE_EXT_REF_CLK_N

PCIE_REXT CG63 AP_PCIE_RCAL
R0800 3.01K 1% 1/32W MF 01005 ROOM=SOC

LINK0 LINK3 LINK1 LINK2

PCIE_CLKREQ3* BE66 PCIE_WLAN_BI_AP_CLKREQ_L 52
PCIE_REF_CLK3_P CL64 90_PCIE_AP_TO_WLAN_REFCLK_P 52
PCIE_REF_CLK3_N CM64 90_PCIE_AP_TO_WLAN_REFCLK_N 52
PCIE_RX3_P CM61 90_AP_PCIE3_RXD_C_P 52
PCIE_RX3_N CL61 90_AP_PCIE3_RXD_C_N 52
PCIE_TX3_P CK63 90_AP_PCIE3_TXD_C_P 52
PCIE_TX3_N CJ63 90_AP_PCIE3_TXD_C_N 52
PCIE_PERST3* BJ66 PCIE_AP_TO_WLAN_RESET_L 52
R0806 100K 5% 1/32W MF 01005 ROOM=SOC

PCIE_CLKREQ2* BE65 PCIE_BB_BI_AP_CLKREQ_L 52
PCIE_REF_CLK2_P CK59 90_PCIE_AP_TO_BB_REFCLK_P 52
PCIE_REF_CLK2_N CJ59 90_PCIE_AP_TO_BB_REFCLK_N 52

WLAN RX PP's are now managed on Page 52
PCIE_RX2_P CK56 90_AP_PCIE2_RXD_C_P 52
PCIE_RX2_N CJ56 90_AP_PCIE2_RXD_C_N 52
PCIE_TX2_P CM57 90_AP_PCIE2_TXD_C_P 52
PCIE_TX2_N CL57 90_AP_PCIE2_TXD_C_N 52
PCIE_PERST2* BE64 PCIE_AP_TO_BB_RESET_L 52
R0801 100K 5% 1/32W MF 01005 ROOM=SOC

PCIE LINK 0
PCIE LINK 1
PCIE LINK 2
PCIE LINK 3

LINK 1 USED ON AP_DEV ONLY

Notebookschematics.com

PAGE TITLE: SOC:PCIE
Apple Inc.
DRAWING NUMBER: 051-00482
SIZE: D
REVISION: 8.0.0
BRANCH:
PAGE: 8 OF 53
SHEET: 8 OF 81

NOTICE OF PROPRIETARY PROPERTY:
THE INFORMATION CONTAINED HEREIN IS THE PROPRIETARY PROPERTY OF APPLE INC.
THE POSESSOR AGREES TO THE FOLLOWING:
I TO MAINTAIN THIS DOCUMENT IN CONFIDENCE
II NOT TO REPRODUCE OR COPY IT
III NOT TO REVEAL OR PUBLISH IT IN WHOLE OR PART
IV ALL RIGHTS RESERVED

# SOC - MIPI & ISP INTERFACES

0.825-0.94V @25mA MAX
PP0V9_SOC_FIXED
1.62-1.98V @7mA MAX
PP1V8

C0902 0.1UF 20% 6.3V X5R-CERM 01005 ROOM=SOC
C0900 2.2UF 20% 6.3V X5R-CERM 0201-1 ROOM=SOC
C0901 2.2UF 20% 6.3V X5R-CERM 0201-1 ROOM=SOC
C0903 0.1UF 20% 6.3V X5R-CERM 01005 ROOM=SOC

VDD_FIXED_MIPI
VDD18_MIPI

U0700
CAYMAN-2GB-20NM-DDR-M
CSP
SYM 3 OF 16

| | | | |
|---|---|---|---|
| 90_MIPI_NH_TO_AP_DATA0_P | A18 | MIPI0C_DPDATA0 | |
| 90_MIPI_NH_TO_AP_DATA0_N | B18 | MIPI0C_DNDATA0 | |
| 90_MIPI_NH_TO_AP_DATA1_P | B20 | MIPI0C_DPDATA1 | |
| 90_MIPI_NH_TO_AP_DATA1_N | C20 | MIPI0C_DNDATA1 | |
| NC | C24 | MIPI0C_DPDATA2 | |
| NC | B24 | MIPI0C_DNDATA2 | |
| NC | A26 | MIPI0C_DPDATA3 | |
| NC | B26 | MIPI0C_DNDATA3 | |
| 90_MIPI_NH_TO_AP_CLK_P | B22 | MIPI0C_DPCLK | |
| 90_MIPI_NH_TO_AP_CLK_N | A22 | MIPI0C_DNCLK | |
| MIPI0C_REXT | E24 | MIPI0C_REXT | |
| 90_MIPI_AP_TO_LCM_DATA0_P | B4 | MIPID_DPDATA0 | |
| 90_MIPI_AP_TO_LCM_DATA0_N | A4 | MIPID_DNDATA0 | |
| 90_MIPI_AP_TO_LCM_DATA1_P | B5 | MIPID_DPDATA1 | |
| 90_MIPI_AP_TO_LCM_DATA1_N | C5 | MIPID_DNDATA1 | |
| 90_MIPI_AP_TO_LCM_DATA2_P | C9 | MIPID_DPDATA2 | |
| 90_MIPI_AP_TO_LCM_DATA2_N | B9 | MIPID_DNDATA2 | |
| 90_MIPI_AP_TO_LCM_DATA3_P | A11 | MIPID_DPDATA3 | |
| 90_MIPI_AP_TO_LCM_DATA3_N | B11 | MIPID_DNDATA3 | |
| 90_MIPI_AP_TO_LCM_CLK_P | B7 | MIPID_DPCLK | |
| 90_MIPI_AP_TO_LCM_CLK_N | A7 | MIPID_DNCLK | |
| AP_TO_STROBE_DRIVER_HWEN | BN4 | DISP_TOUCH_BSYNC0 | |
| SPI_AP_TO_MAGGIE_CS_L | BR2 | DISP_TOUCH_BSYNC1 | |
| NC | BR4 | DISP_TOUCH_EB | |
| MIPID_REXT | E11 | MIPID_REXT | |

| | | | |
|---|---|---|---|
| ISP_I2C0_SCL | N65 | I2C_ISP_UT_SCL | 48 |
| ISP_I2C0_SDA | N66 | I2C_ISP_UT_SDA | 48 |
| ISP_I2C1_SCL | U64 | I2C_ISP_NV_SCL | 30 46 |
| ISP_I2C1_SDA | R65 | I2C_ISP_NV_SDA | 30 46 |
| ISP_I2C2_SCL | U65 | I2C_ISP_NH_SCL | 48 |
| ISP_I2C2_SDA | U66 | I2C_ISP_NH_SDA | 48 |
| ISP_I2C3_SCL | W64 | NC | Dev ONLY |
| ISP_I2C3_SDA | W66 | NC | |
| SENSOR_INT | AA64 | NC | Spare |
| SENSOR0_CLK | B50 | AP_TO_UT_CLK_R | |
| SENSOR1_CLK | A48 | AP_TO_NV_CLK_R | 30 D11/111 ONLY |
| SENSOR2_CLK | C48 | AP_TO_NH_CLK_R | |
| SENSOR0_RST | A50 | AP_TO_UT_SHUTDOWN_L | 25 |
| SENSOR1_RST | E50 | AP_TO_NV_SHUTDOWN_L | 30 D11/111 ONLY |
| SENSOR2_RST | AA65 | AP_TO_NH_SHUTDOWN_L | 29 |
| SENSOR3_RST | AE64 | TP_SENSOR3_RST | 1 PP0902 P2MM-NSM ROOM=SOC |
| SENSOR4_RST | AC65 | NC | |
| SENSOR0_ISTRB | E52 | NC_SENSOR0_ISTRB | |
| SENSOR1_ISTRB | D50 | NC | |
| SENSOR0_XSHUTDOWN | C50 | NC | |
| SENSOR1_XSHUTDOWN | B48 | AP_TO_MUON_BL_STROBE_EN | 37 46 |
| MIPI1C_REXT | E16 | | |
| MIPI1C_DPDATA0 | B12 | | |
| MIPI1C_DNDATA0 | C12 | | |
| MIPI1C_DPDATA1 | B16 | | |
| MIPI1C_DNDATA1 | C16 | | |
| MIPI1C_DPCLK | B14 | | |
| MIPI1C_DNCLK | A14 | | |

R0900 4.02K 1% 1/32W MF 01005 ROOM=SOC
R0901 4.02K 1% 1/32W MF 01005 ROOM=SOC
D11/111 ONLY
Dev only
Per Radar 21221938

R0906 33.2 1% 1/32W MF 01005 ROOM=SOC
NOSTUFF C0906 100PF 5% 35V NP0-C0G 01005
AP_TO_UT_CLK 25
R0907 33.2 1% 1/32W MF 01005 ROOM=SOC
NOSTUFF C0907 100PF 5% 35V NP0-C0G 01005
AP_TO_NH_CLK 29

Radar 20511449
<--- Needed for Cayman debug; this pin cannot be input

PP_VDD_MAIN
C0904 220PF 5% 10V C0G-CERM 01005 ROOM=SOC
C0905 220PF 5% 10V C0G-CERM 01005 ROOM=SOC
C0908 220PF 5% 10V C0G-CERM 01005 ROOM=SOC
C0909 220PF 5% 10V C0G-CERM 01005 ROOM=SOC
C0910 220PF 5% 10V C0G-CERM 01005 ROOM=SOC
AC return path for LCM MIPI which is referenced to GND and VDD_MAIN
Radar 21203307

PAGE TITLE
SOC:MIPI AND ISP

Apple Inc.

DRAWING NUMBER 051-00482
SIZE D
REVISION 8.0.0
BRANCH
PAGE 9 OF 53
SHEET 9 OF 81

NOTICE OF PROPRIETARY PROPERTY:
THE INFORMATION CONTAINED HEREIN IS THE PROPRIETARY PROPERTY OF APPLE INC.
THE POSESSOR AGREES TO THE FOLLOWING:
I TO MAINTAIN THIS DOCUMENT IN CONFIDENCE
II NOT TO REPRODUCE OR COPY IT
III NOT TO REVEAL OR PUBLISH IT IN WHOLE OR PART
IV ALL RIGHTS RESERVED

Nboot-schematics.com

Notebookschematics.com

19 16 8 PP1V2_SOC

VDD12_PLL_LPDP:1.14-1.26V @3mA MAX
VDD12_LPDP:1.14-1.26V @60mA MAX

C1013 2.2UF 20% 6.3V X5R-CERM 0201-1 ROOM=SOC
C1001 2.2UF 20% 6.3V X5R-CERM 0201-1 ROOM=SOC
C1004 0.1UF 20% 6.3V X5R-CERM 01005 ROOM=SOC
C1005 0.01UF 10% 6.3V X5R 01005 ROOM=SOC
C1002 15PF 5% 16V NP0-C0G-CERM 01005 ROOM=SOC
Desense for Wifi frequencies

CKPLUS_WAIVE=PWRTERM2GND
CKPLUS_WAIVE=PWRTERM2GND
CKPLUS_WAIVE=PWRTERM2GND

G25 G28 G30 G55 G58 G60 G62 G23

VDD12_LPDP_TX
VDD12_LPDP_RX
VDD12_PLL_LPDP

U0700
CAYMAN-2GB-20NM-DDR-M
CSP
SYM 4 OF 16

30 90_LPDP_NV_TO_AP_D0_P — A54 LPDPRX_RX_D0_P
30 90_LPDP_NV_TO_AP_D0_N — B54 LPDPRX_RX_D0_N
LPDP_TX0P B27 NC
LPDP_TX0N C27 NC

30 90_LPDP_NV_TO_AP_D1_P — B56 LPDPRX_RX_D1_P
30 90_LPDP_NV_TO_AP_D1_N — C56 LPDPRX_RX_D1_N
LPDP_TX1P A29 NC
LPDP_TX1N B29 NC

LPDP Lanes swapped between D10 and D11

25 90_LPDP_UT_TO_AP_D2_P — A61 LPDPRX_RX_D2_P
25 90_LPDP_UT_TO_AP_D2_N — B61 LPDPRX_RX_D2_N
LPDP_TX2P B31 NC
LPDP_TX2N C31 NC

D11/111 ONLY

25 90_LPDP_UT_TO_AP_D3_P — B63 LPDPRX_RX_D3_P
25 90_LPDP_UT_TO_AP_D3_N — C63 LPDPRX_RX_D3_N
LPDP_TX3P A33 NC
LPDP_TX3N B33

A64 LPDPRX_RX_D4_P
GND ON MLB; other on Dev
B64 LPDPRX_RX_D4_N

30 LPDP_NV_BI_AP_AUX — D54 LPDPRX_AUX_D0_P
LPDP_AUX_P D33 NC
NC E56 LPDPRX_AUX_D1_P
LPDP_AUX_N E33 NC

D11/111 ONLY
25 LPDP_UT_BI_AP_AUX — D61 LPDPRX_AUX_D2_P
NC E63 LPDPRX_AUX_D3_P
LPDP_CAL_DRV_OUT E35 NC
NC D64 LPDPRX_AUX_D4_P
LPDP_CAL_VSS_EXT E31 NC

B59 LPDPRX_BYP_CLK_P
GND ON MLB; other on Dev
C59 LPDPRX_BYP_CLK_N
EDP_HPD BN3 NC
DP_WAKEUP AP2 NC

18 15 9 8 7 PP0V9_SOC_FIXED — A57 LPDPRX_RCAL_P

R1001 300 1% 1/32W MF 01005-1 ROOM=SOC
AP_LPDPRX_RCAL_NEG — B57 LPDPRX_RCAL_N

C1006 100PF 5% 10V NP0-C0G 01005 ROOM=SOC
NC D57 LPDPRX_EXT_C

#24401637:Unconnect LPDPRX_EXT_C

Dev ONLY

Reserved for PanelID[1:0] on ap_dev board
Reserved for PanelID[1:0] on ap_dev board

28 27 26 25 23 21 19 18 9 53 8 46 41 40 39 37 35 34 33 31 30 PP_VDD_MAIN

C1010 33PF 5% 16V NP0-C0G-CERM 01005 ROOM=SOC
C1011 33PF 5% 16V NP0-C0G-CERM 01005 ROOM=SOC

AC return path for LCM LPDP which is referenced to GND and VDD_MAIN

PAGE TITLE
SOC:LPDP

Apple Inc.

DRAWING NUMBER 051-00482
SIZE D
REVISION 8.0.0
BRANCH
PAGE 10 OF 53
SHEET 10 OF 81

NOTICE OF PROPRIETARY PROPERTY:
THE INFORMATION CONTAINED HEREIN IS THE PROPRIETARY PROPERTY OF APPLE INC.
THE POSESSOR AGREES TO THE FOLLOWING:
I TO MAINTAIN THIS DOCUMENT IN CONFIDENCE
II NOT TO REPRODUCE OR COPY IT
III NOT TO REVEAL OR PUBLISH IT IN WHOLE OR PART
IV ALL RIGHTS RESERVED

# SOC - SERIAL INTERFACES

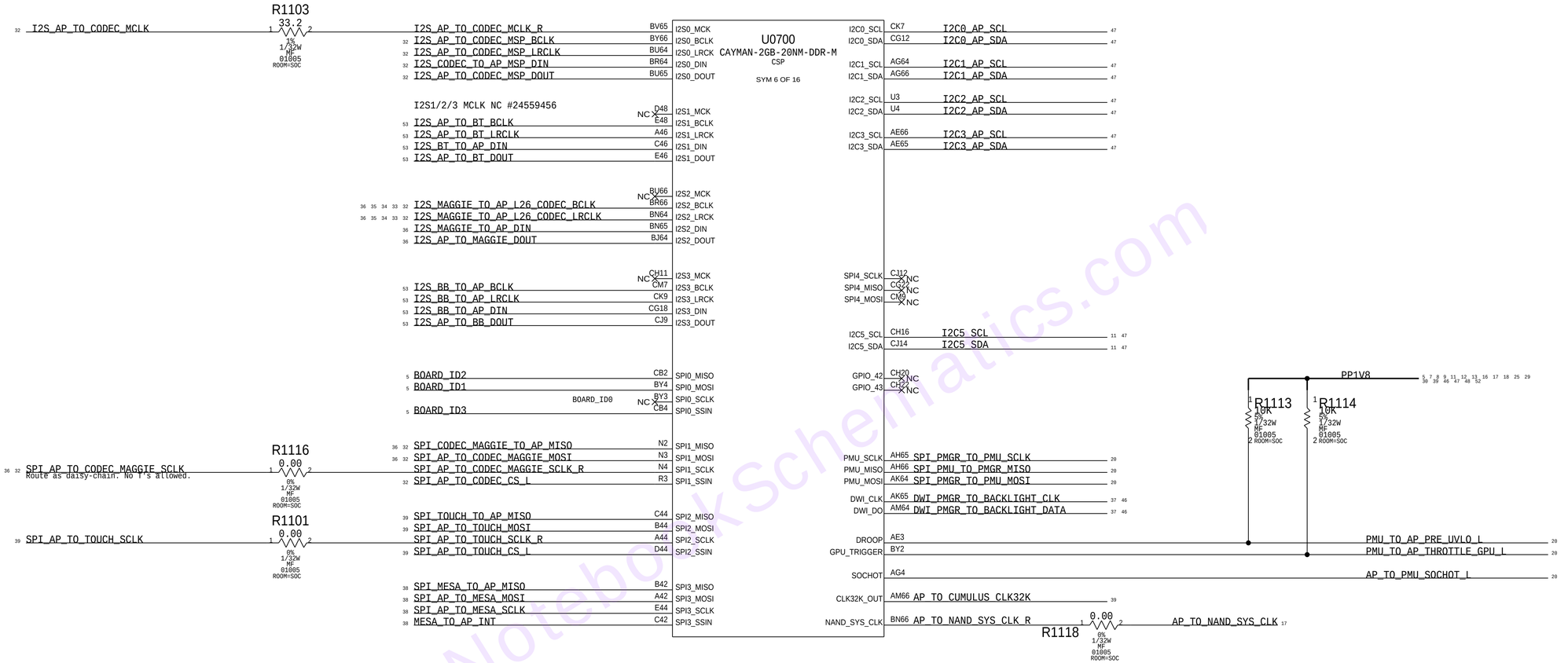


## I2C5

See Radar#25316444 for Details

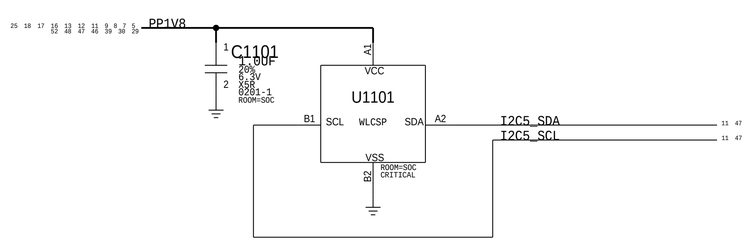


Notebookschematics.com

PAGE TITLE: SOC:SERIAL

Apple Inc.

DRAWING NUMBER: 051-00482 | SIZE: D

REVISION: 8.0.0

BRANCH:

PAGE: 11 OF 53

SHEET: 11 OF 81

NOTICE OF PROPRIETARY PROPERTY:
THE INFORMATION CONTAINED HEREIN IS THE PROPRIETARY PROPERTY OF APPLE INC.
THE POSESSOR AGREES TO THE FOLLOWING:
I TO MAINTAIN THIS DOCUMENT IN CONFIDENCE
II NOT TO REPRODUCE OR COPY IT
III NOT TO REVEAL OR PUBLISH IT IN WHOLE OR PART
IV ALL RIGHTS RESERVED

# SOC - GPIO INTERFACES

#24557547:Delete R1204

36 MAGGIE_TO_AP_CDONE

PP1V8

29 25 18 17 16 52 13 48 11 47 9 46 8 39 7 38 5 30

Nostuff per #24511702

NOSTUFF
R1210
10K
5%
1/32W
MF
01005
ROOM=SOC

20 PMU_TO_AP_THROTTLE_CPU_L

D10/D11 ONLY

Dev only

#24608280

BOOT_CONFIG0

BOOT_CONFIG1

BOARD_ID4

#25120460:REQUEST_DFU Assignment

U0700
CAYMAN-2GB-20NM-DDR-M
CSP
SYM 5 OF 16

| | | | | | |
|---|---|---|---|---|---|
| | | BB64 | NC | GPIO_0 | |
| 27 | AP_TO_ACC_BUCK_VSEL | BC65 | | GPIO_1 | |
| 36 | AP_TO_MAGGIE_CRESETB_L | BB66 | | GPIO_2 | |
| 44 20 | BUTTON_VOL_UP_L | AY65 | | GPIO_3 | |
| DEV ONLY | | AY66 | NC | GPIO_4 | |
| 53 | AP_TO_BB_RESET_L | AV65 | | GPIO_5 | |
| | | AV67 | | GPIO_6 | |
| RESERVERD FOR SSHB ID ON DEV BOARD | | AT67 | | GPIO_7 | |
| D101/D111 ONLY | NC_AP_TO_BB_IPC_GPIO2 | AT66 | | GPIO_8 | |
| D101/D111 ONLY | NC_AP_TO_GNSS_WAKE | AT64 | | GPIO_9 | |
| 53 | AP_TO_BB_TIME_MARK | AP66 | | GPIO_10 | |
| D101/D111 ONLY | NC_AP_TO_GNSS_TIME_MARK | AP65 | | GPIO_11 | |
| 53 | BB_TO_AP_RESET_DETECT_L | AH64 | | GPIO_12 | |
| 33 | AP_TO_SPKAMP2_RESET_L | AE4 | | GPIO_13 | |
| 29 | ALS_TO_AP_INT_L | AC3 | | GPIO_14 | |
| 53 | AP_TO_NFC_FW_DWLD_REQ | AE2 | | GPIO_15 | |
| 17 | AP_TO_NAND_FW_STRAP | BB2 | | GPIO_16 | |
| 39 | TOUCH_TO_AP_INT_L | BB4 | | GPIO_17 | |
| | | BC3 | NC | GPIO_18 | |
| | | BC4 | | GPIO_19 | |
| | | BE2 | NC | GPIO_20 | |
| 53 | AP_TO_BBPMU_RADIO_ON_L | BE4 | | GPIO_21 | |
| 53 | AP_TO_ICEFALL_FW_DWLD_REQ | BE3 | | GPIO_22 | |
| 39 | AP_TO_LCM_RESET_L | BG2 | | GPIO_23 | |
| 36 | AP_BI_HOMER_BOOTLOADER_ALIVE | CJ11 | | GPIO_24 | |
| | | CL9 | NC | GPIO_25 | |
| 20 4 | PMU_TO_AP_FORCE_DFU | CH14 | | GPIO_26 | |
| | NC_DFU_STATUS | CK11 | | GPIO_27 | |
| 5 | PP1V8 | CG20 | | GPIO_28 | |
| | | AA2 | NC | GPIO_29 | |
| 53 | AP_TO_NFC_DEV_WAKE | AA3 | | GPIO_30 | |
| 20 | PMU_TO_AP_BUF_RINGER_A | D42 | | GPIO_31 | |
| 53 | AP_TO_BT_WAKE | E42 | | GPIO_32 | |
| 53 | AP_TO_WLAN_DEVICE_WAKE | A41 | | GPIO_33 | |
| 5 | BOARD_REV3 | C41 | | GPIO_34 | |
| 5 | BOARD_REV2 | E41 | | GPIO_35 | |
| 5 | BOARD_REV1 | A39 | | GPIO_36 | |
| 5 | BOARD_REV0 | AT4 | | GPIO_37 | |
| 39 | AP_TO_TOUCH_MAMBA_RESET_L | AT2 | | GPIO_38 | |
| 53 | AP_TO_BB_MESA_ON | AV3 | | GPIO_39 | |
| 53 | AP_TO_BB_COREDUMP | AY2 | | GPIO_40 | |
| 53 | AP_TO_BB_IPC_GPIO1 | AY3 | | GPIO_41 | |
| | | | | | |
| 20 | PMU_TO_AP_BUF_POWER_KEY_L | BU2 | | REQUEST_DFU1 | |
| 20 | PMU_TO_AP_BUF_VOL_DOWN_L | BU3 | | REQUEST_DFU2 | |

| | | | | | |
|---|---|---|---|---|---|
| | | AG2 | NC | | |
| TMR32_PWM0 | | | | | |
| TMR32_PWM1 | | AH4 | | PROX_BI_AP_AOP_INT_PWM_L | 13 29 |
| TMR32_PWM2 | | AH3 | | NC_BB_TO_AP_RESET_ACT_L | |
| UART0_RXD | | CL5 | | UART_AP_DEBUG_RXD | 40 |
| UART0_TXD | | CJ7 | | UART_AP_DEBUG_TXD | 40 |
| UART1_CTS* | | E39 | | UART_BT_TO_AP_CTS_L | 53 |
| UART1_RTS* | | D39 | | UART_AP_TO_BT_RTS_L | 53 |
| UART1_RXD | | C39 | | UART_BT_TO_AP_RXD | 53 |
| UART1_TXD | | B39 | | UART_AP_TO_BT_TXD | 53 |
| UART2_CTS* | | AM4 | | NC_AP_UART2_CTS_L | |
| UART2_RTS* | | AK3 | | NC_AP_UART2_RTS_L | |
| UART2_RXD | | AK4 | | NC_AP_UART2_RXD | |
| UART2_TXD | | AH2 | | NC_AP_UART2_TXD | |
| UART3_CTS* | | AA4 | | UART_NFC_TO_AP_CTS_L | 53 |
| UART3_RTS* | | W2 | | UART_AP_TO_NFC_RTS_L | 53 |
| UART3_RXD | | W4 | | UART_NFC_TO_AP_RXD | 53 |
| UART3_TXD | | U2 | | UART_AP_TO_NFC_TXD | 53 |
| UART4_CTS* | | D37 | | UART_WLAN_TO_AP_CTS_L | 53 |
| UART4_RTS* | | C37 | | UART_AP_TO_WLAN_RTS_L | 53 |
| UART4_RXD | | B37 | | UART_WLAN_TO_AP_RXD | 53 |
| UART4_TXD | | A37 | | UART_AP_TO_WLAN_TXD | 53 |
| UART5_RTXD | | BG4 | | SWI_AP_BI_TIGRIS | 21 |
| UART6_RXD | | CG16 | | UART_ACCESSORY_TO_AP_RXD | 40 |
| UART6_TXD | | CG14 | | UART_AP_TO_ACCESSORY_TXD | 40 |
| UART7_RXD | | AP3 | | UART_HOMER_TO_AP_RXD | 36 |
| UART7_TXD | | AM2 | | UART_AP_TO_HOMER_TXD | 36 |

D101/D111 ONLY

D101/D111 ONLY; for GNSS

Notebookschematics.com

PAGE TITLE
SOC:GPIO & UART

Apple Inc.

DRAWING NUMBER 051-00482
SIZE D
REVISION 8.0.0
BRANCH
PAGE 12 OF 53
SHEET 12 OF 81

NOTICE OF PROPRIETARY PROPERTY:
THE INFORMATION CONTAINED HEREIN IS THE PROPRIETARY PROPERTY OF APPLE INC.
THE POSESSOR AGREES TO THE FOLLOWING:
I TO MAINTAIN THIS DOCUMENT IN CONFIDENCE
II NOT TO REPRODUCE OR COPY IT
III NOT TO REVEAL OR PUBLISH IT IN WHOLE OR PART
IV ALL RIGHTS RESERVED

# SOC - AOP

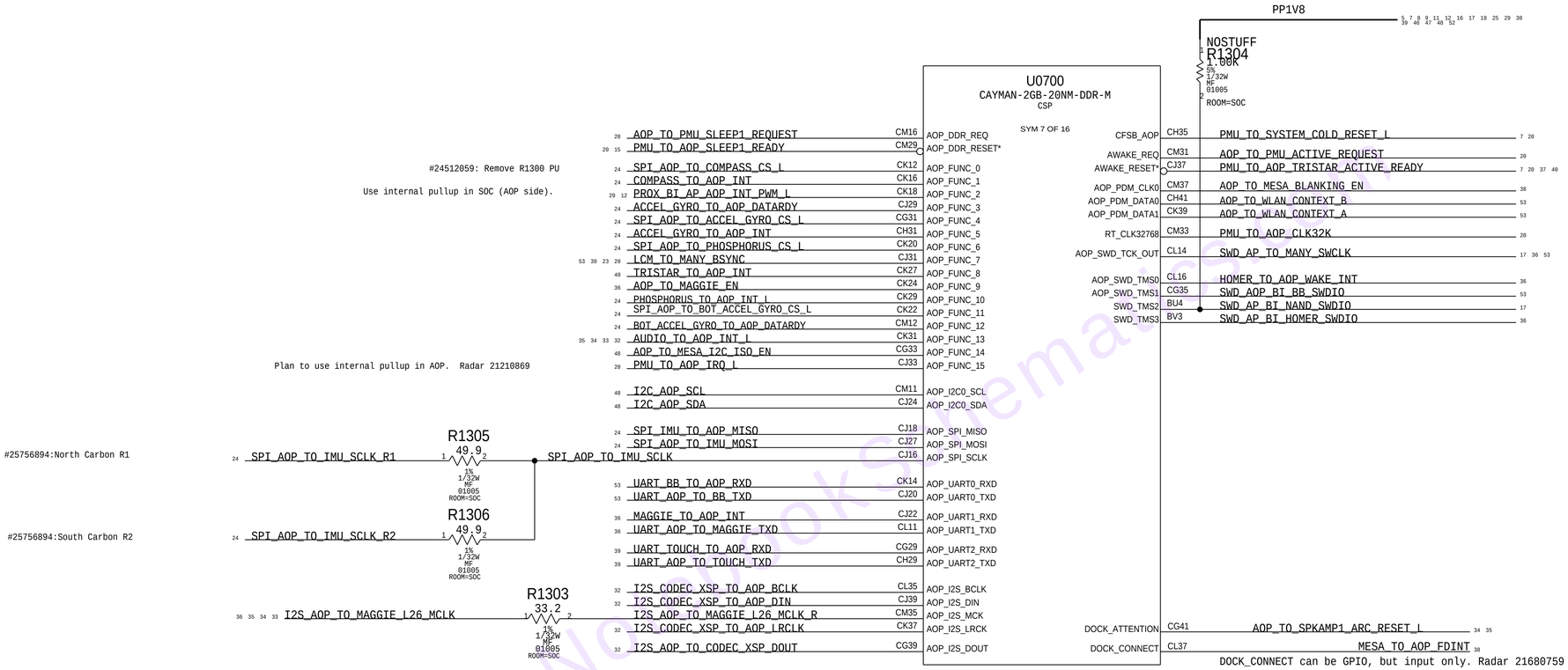


Notebook Schematics

PAGE TITLE

SOC:AOP

Apple Inc.

DRAWING NUMBER 051-00482 SIZE D

REVISION 8.0.0

BRANCH

PAGE 13 OF 53

SHEET 13 OF 81

NOTICE OF PROPRIETARY PROPERTY:

THE INFORMATION CONTAINED HEREIN IS THE PROPRIETARY PROPERTY OF APPLE INC.
THE POSESSOR AGREES TO THE FOLLOWING:
I TO MAINTAIN THIS DOCUMENT IN CONFIDENCE
II NOT TO REPRODUCE OR COPY IT
III NOT TO REVEAL OR PUBLISH IT IN WHOLE OR PART
IV ALL RIGHTS RESERVED

# SOC - CPU, GPU & SOC RAILS

PP_CPU_VAR
1.06V @17.4A MAX
0.93V @tbd A MAX
0.625V @tbd A MAX

C1401 15UF 20% 6.3V X5R 0402-1
C1408 15UF 20% 6.3V X5R 0402-1
C1434 15UF 20% 6.3V X5R 0402-1
C1449 2.2UF 20% 6.3V X5R-CERM 0201-1 ROOM=SOC

C1404 7.5UF 20% 4V CERM 0402
C1411 7.5UF 20% 4V CERM 0402
C1417 7.5UF 20% 4V CERM 0402
C1422 4.3UF 20% 4V CERM 0402
C1427 4.3UF 20% 4V CERM 0402
C1430 4.3UF 20% 4V CERM 0402

C1405 4.3UF 20% 4V CERM 0402
C1412 4.3UF 20% 4V CERM 0402
C1418 1UF 20% 4V CERM 0402
C1423 1UF 20% 4V CERM 0402
C1428 1UF 20% 4V CERM 0402
C1431 1UF 20% 4V CERM 0402

C1406 0.47UF 20% 6.3V CERM 0402
C1413 0.47UF 20% 6.3V CERM 0402
C1419 0.47UF 20% 6.3V CERM 0402
C1424 0.47UF 20% 6.3V CERM 0402
C1460 7.5UF 20% 4V CERM 0402
C1461 7.5UF 20% 4V CERM 0402

OMIT
XW1402 SHORT-20L-0.05MM-SM ROOM=SOC NO_XNET_CONNECTION
18 BUCK0_PP_CPU_FB

1.06V @1.0A MAX
0.80V @TBDA MAX

18 PP_CPU_SRAM_VAR

C1407 7.5UF 20% 4V CER 0402
C1435 7.5UF 20% 4V CER 0402
C1433 7.5UF 20% 4V CERM 0402
C1458 10UF 20% 6.3V CERM-X5R 0402-9 ROOM=SOC

1.03V @1.44A MAX
0.92V @1.50A MAX
0.80V @TBD A MAX

18 PP_GPU_SRAM_VAR

C1439 7.5UF 20% 4V CER 0402
C1437 7.5UF 20% 4V CERM 0402
C1459 10UF 20% 6.3V CERM-X5R 0402-9 ROOM=SOC

U0700
CAYMAN-2GB-20NM-DDR-M
CSP
SYM 8 OF 16

AD10 AD15 AD19 AD23 AF13 AF17 AJ23 AL21 AL8 AN10 AN19 AN23 AR13 AR17 AR21 AU10 AU15 AW13 AW17 AW21 BA10 BA23 BD21 BD8 BF10 BF23 BH13 BH17 BH21 BK10 BK15 AJ10 — VDD_CPU

AF8 AN15 AR8 AU19 AW8 BA15 BA19 BH8 — VDD_CPU_SRAM

AF43 AF47 AF51 P17 P21 P25 P30 P34 P38 P43 P47 P51 Y15 Y19 Y23 Y40 Y45 Y49 Y53 — VDD_GPU_SRAM

AB13 AB17 AB21 AB25 AB43 AB47 AB51 AB55 AD40 AD45 AD49 AD53 AF55 AJ40 AJ49 AJ53 J25 J30 J38 J43 J47 J51 L15 L19 L23 L28 L32 L36 L40 L45 L49 L53 P13 T15 T36 T40 T53 V13 V25 V34 V38 V51 V55 Y28 — VDD_GPU

PP1401 P2MM-NSM ROOM=SOC — PP_GPU_VAR
PP1402 P2MM-NSM ROOM=SOC — PP_CPU_VAR

XW1401 SHORT-20L-0.05MM-SM
OMIT ROOM=SOC NO_XNET_CONNECTION
BUCK1_PP_GPU_FB

1.03V @12.9A MAX
0.92V @10.7A MAX
0.80V @TBD A MAX
0.67V @TBD A MAX
PP_GPU_VAR

C1414 15UF 20% 6.3V X5R 0402-1
C1466 2.2UF 20% 6.3V X5R-CERM 0201-1 ROOM=SOC
C1448 2.2UF 20% 6.3V X5R-CERM 0201-1 ROOM=SOC

C1402 4.3UF 20% 4V CERM 0402
C1409 4.3UF 20% 4V CERM 0402
C1452 4.3UF 20% 4V CERM 0402
C1454 4.3UF 20% 4V CERM 0402
C1416 7.5UF 20% 4V CERM 0402
C1421 7.5UF 20% 4V CERM 0402
C1426 7.5UF 20% 4V CERM 0402
C1432 7.5UF 20% 4V CERM 0402

C1410 1UF 20% 4V CERM 0402
C1415 1UF 20% 4V CERM 0402
C1420 1UF 20% 4V CERM 0402
C1425 0.47UF 20% 6.3V CERM 0402
C1429 0.47UF 20% 6.3V CERM 0402
C1456 0.47UF 20% 6.3V CERM 0402
C1457 0.47UF 20% 6.3V CERM 0402

VDD_CPU_SENSE BK23 — AP_VDD_CPU_SENSE 20 — PP1408 P2MM-NSM ROOM=SOC
VSS_CPU_SENSE BK21 TP_AP_VSS_CPU_SENSE — PP1403 P2MM-NSM ROOM=SOC
VDD_GPU_SENSE AJ45 — AP_VDD_GPU_SENSE 20 — PP1409 P2MM-NSM ROOM=SOC
VDD_SOC_SENSE AL47 TP_VDD_SOC_SENSE — PP1410 P2MM-NSM ROOM=SOC
VSS_SENSE AJ47 TP_VSS_SENSE — PP1411 P2MM-NSM ROOM=SOC

C1436 10UF 20% 6.3V CERM-X5R 0402-9 ROOM=SOC
C1444 10UF 20% 6.3V CERM-X5R 0402-9 ROOM=SOC
C1403 10UF 20% 6.3V CERM-X5R 0402-9 ROOM=SOC

PP_SOC_VAR
0.80V @4.1A MAX
0.67V @TBDA MAX
OMIT
XW1403 SHORT-20L-0.05MM-SM ROOM=SOC NO_XNET_CONNECTION
BUCK2_PP_SOC_FB

C1465 4.3UF 20% 4V CERM 0402
C1438 1UF 20% 4V CERM 0402
C1440 7.5UF 20% 4V CERM 0402
C1442 0.47UF 20% 6.3V CERM 0402

U0700
CAYMAN-2GB-20NM-DDR-M
CSP
SYM 9 OF 16

AD28 AD32 AF60 AJ28 AJ32 AJ36 AL6 AN28 AN32 AN36 AN40 AN45 AN49 AN53 AN58 AR25 AR30 AR34 AR38 AR43 AR47 AR51 AR55 AW30 AW34 AW38 AW43 AW47 AW51 AW55 AW60 BD25 BD30 BD34 BD38 BD43 BD47 BD51 BD55 BD6 BD60 BF28 BF32 BF36 BF45 BF49 BF53 BF58 BF28 BK32 BK36 BK40 — VDD_SOC

BK45 BK49 BK53 BM55 BP15 BP19 BP23 BP28 BP32 BP36 BP40 BP45 BP49 BP53 BP58 BT13 BT17 BT21 BT25 BT30 BT34 BT38 BT43 BT47 BT51 BT55 BW10 CA13 CA17 CA21 CA25 CA30 CA34 CA38 CA43 CA47 CE13 CE17 CE45 J13 J21 J34 P55 T10 T60 V30 Y10 Y36 Y60 BF40 J60 AW25 — VDD_SOC

NotebookSchematics.com

PAGE TITLE
SOC:POWER (1/3)

Apple Inc.

DRAWING NUMBER 051-00482
SIZE D
REVISION 8.0.0
BRANCH
PAGE 14 OF 53
SHEET 14 OF 81

NOTICE OF PROPRIETARY PROPERTY:
THE INFORMATION CONTAINED HEREIN IS THE PROPRIETARY PROPERTY OF APPLE INC.
THE POSESSOR AGREES TO THE FOLLOWING:
I TO MAINTAIN THIS DOCUMENT IN CONFIDENCE
II NOT TO REPRODUCE OR COPY IT
III NOT TO REVEAL OR PUBLISH IT IN WHOLE OR PART
IV ALL RIGHTS RESERVED

# SOC - POWER SUPPLIES

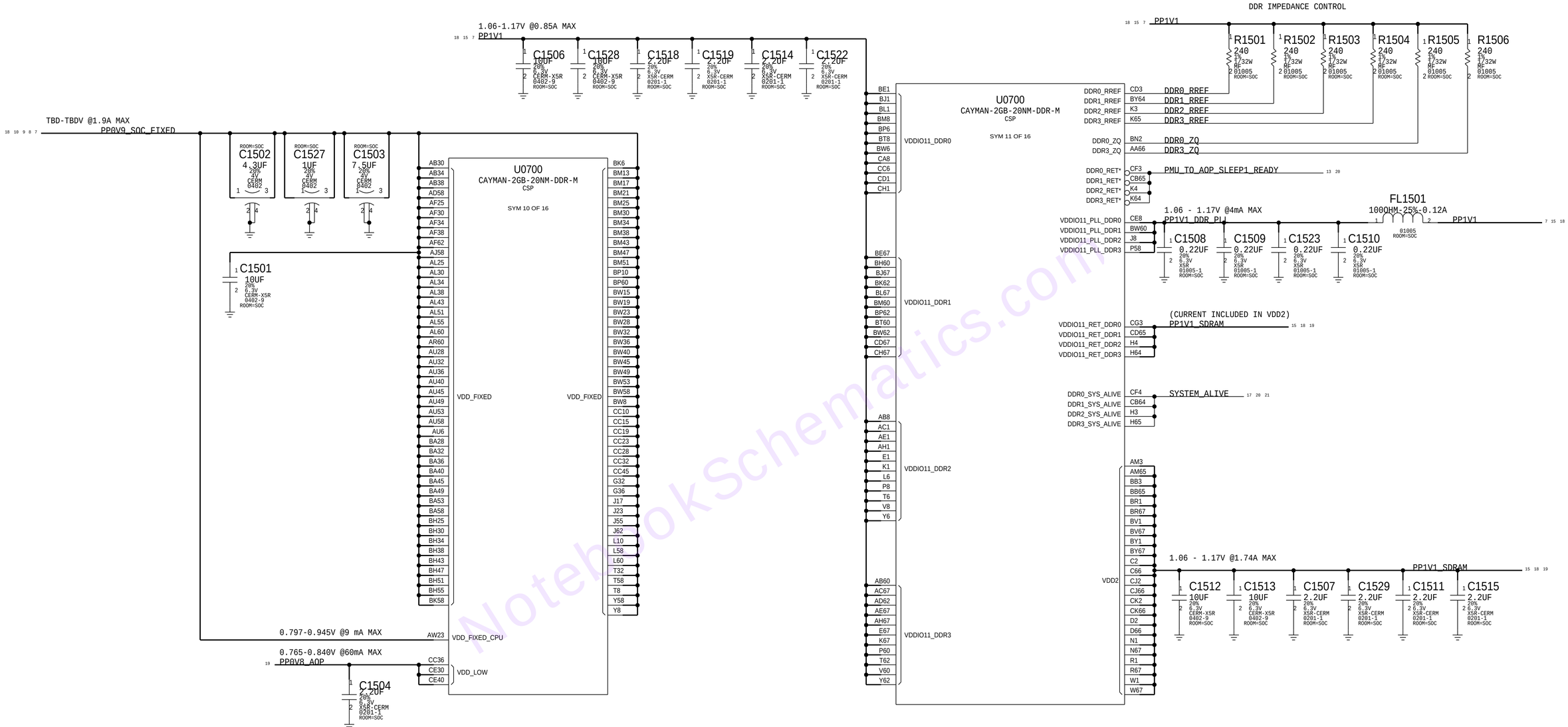


NotebookSchematics.com

PAGE TITLE

SOC:POWER (2/3)

Apple Inc.

DRAWING NUMBER 051-00482

SIZE D

REVISION 8.0.0

BRANCH

PAGE 15 OF 53

SHEET 15 OF 81

NOTICE OF PROPRIETARY PROPERTY:

THE INFORMATION CONTAINED HEREIN IS THE PROPRIETARY PROPERTY OF APPLE INC.
THE POSESSOR AGREES TO THE FOLLOWING:
I TO MAINTAIN THIS DOCUMENT IN CONFIDENCE
II NOT TO REPRODUCE OR COPY IT
III NOT TO REVEAL OR PUBLISH IT IN WHOLE OR PART
IV ALL RIGHTS RESERVED

# SOC - POWER SUPPLIES

U0700
CAYMAN-2GB-20NM-DDR-M
CSP
SYM 13 OF 16

VSS: A12 A16 A2 A20 A24 A27 A31 A35 A5 A52 A56 A59 A63 A66 A9 AA1 AA67 AB10 AB15 AB19 AB23 AB28 AB32 AB36 AB40 AB45 AB49 AB53 AB58 AB6 AB62 AC2 AC4 AC64 AC66 AD13 AD17 AD21 AD25 AD30 AD34 AD43 AD47 AD51 AD55 AD60 AD8 AE10 AF15 AF19 AF23 AF28 AF32 AF36 AF40 AF45 AF49 AF53 AF58 AF6 AG1 AG3 AG65 AG67 AJ21 AJ25 AJ30 AJ34 AJ38 AJ43 AL10 AJ51 AJ55 AJ8 AK1 AK2 AK66 AK67

U0700
CAYMAN-2GB-20NM-DDR-M
CSP
SYM 14 OF 16

VSS: AL23 AL28 AL32 AL36 AL40 AL45 AL53 AL58 AL62 AN13 AN17 AN21 AN25 AN30 AN34 AN38 AN43 AN47 AN51 AN55 AN60 AN8 AP1 AP4 AP64 AP67 AR10 AR15 AR19 AR28 AR32 AR36 AR40 AR45 AR49 AR53 AR58 AR6 AR62 AT1 AT3 AT65 AU13 AU17 AU21 AU25 AU30 AU34 AU38 AU43 AU47 AU51 AU55 AU60 AU8 AV1 AV2 AV4 AV64 AV66 AW10 AW15 AW19 CH50 AW28 AW32 AW36 AW40 AW45 AW49 AW53 AW58 AW6 AW62 AY1 AY4 AY64 AY67

U0700
CAYMAN-2GB-20NM-DDR-M
CSP
SYM 15 OF 16

VSS: B1 B3 B35 B41 B46 B52 B65 B67 BA13 BA17 BA21 BA30 BA34 BA38 BA43 BA47 BA51 BA55 BA60 BA8 BC1 BC2 BC66 BC67 BD10 BD23 BD28 BD32 BD36 BD40 BD45 BD49 BD53 BD58 BD62 BF21 BF25 BF30 BF34 BF43 BF47 BF51 BF55 BF8 BG1 BG3 BG65 BG67 BH10 BH15 BH19 BH23 BH28 BH32 BH36 BH40 BH45 BH49 BH53 BH58 BH6 BH62 BK13 BK17 AL49 BK25 BK30 BK34 BK38 BK43 BK47 BK51 BK55 BK60 BK8 BL2 BL4 BL64

U0700
CAYMAN-2GB-20NM-DDR-M
CSP
SYM 16 OF 16

VSS: BL66 BM10 BM15 BM19 BM23 BM28 BM32 BM36 BM40 BM45 BM49 BM53 BM58 BM6 BM62 BN1 BN67 BP13 BP17 BP21 BP25 BP30 BP34 BP38 BP43 BP47 BP51 BP55 BP8 BR3 BR65 BT10 BT15 BT19 BT23 BT28 BT32 BT36 BT40 BT45 BT49 BT53 BT58 BT6 BT62 BU1 BU67 BV2 BV4 BV64 BV66 BW13 BW17 BW21 BW25 BW30 BW34 BW38 BW43 BW47 BW51 CE51 BY65 C11 C14 C18 C22 C26 C29 C33 C35 C4 C52 C54 C57 C61 C64 C7 CA10

U0700
CAYMAN-2GB-20NM-DDR-M
CSP
SYM 12 OF 16

VSS: CA15 CA19 CA23 CA28 CA32 CA36 CA40 CA45 CA49 CA53 CA58 CA6 CA62 CB1 CB3 CB66 CB67 CC13 CC17 CC21 CC30 CC34 CC38 CC43 CL22 T30 CC8 CD2 CD4 CD64 CD66 CE10 CE15 CE47 CE53 CE6 CE62 CF1 CF2 CF64 CF65 CF66 CF67 CG1 CG11 CG2 CG24 CG27 CG4 CG42 CG44 CG46 CG48 CG5 CG52 CG54 CG56 CG59 CG61 CG64 CG65 CG66 CG67 CH12 CH18 CH2 CH24 CH27 CH3 CH33 CH39 CH4 CH42 CH44 CH46 CH48

U0700
CAYMAN-2GB-20NM-DDR-M
CSP
SYM 11 OF 16

VSS: CH5 CH52 CH54 CH56 CH59 CH61 CH63 CH64 CH65 CH66 CH7 CH9 CJ1 CJ3 CJ4 CJ41 CJ42 CJ46 CJ5 CJ50 CJ54 CJ57 CJ61 CJ64 CJ65 CJ67 CK4 CK41 CK42 CK46 CK5 CK50 CK54 CK57 CK61 CK64 CL1 CL12 CL18 CL24 CL27 CL3 CL33 CL39 CL4 CL41 CL44 CL48 CL52 CL56 CL59 CL63 CL65 CL67 CL7 CM18 CM2 CM24 CM27 CM39 CM4 CM41 CM44 CM48 CM5 CM52 CM56 CM59 CM63 CM66

U0700
CAYMAN-2GB-20NM-DDR-M
CSP
SYM 10 OF 16

VSS: D20 D22 D24 D26 D27 D29 D3 D31 D35 D4 D41 D46 D5 D52 D56 D59 D63 D65 D67 D7 D9 E12 E14 E18 E2 E20 E22 E26 E27 E29 E3 E37 E4 E5 E54 E57 E59 E61 E64 E65 E66 E7 E9 F1 F2 F3 F4 F64 F65 F66 F67 G38 G43 G47 G51 G8 H1 H2 H66 H67 J10 J15 J19 J28 J32 J40 J45 J49 J53 J6 K2 K66 L13 L17 L21 L25 L30 L34

U0700
CAYMAN-2GB-20NM-DDR-M
CSP
SYM 9 OF 16

VSS: L38 L43 L47 L51 L55 L62 L8 M1 M2 M3 M4 M64 M65 M66 M67 P10 P15 P19 P23 P28 P32 P36 P40 P45 P49 P53 P6 P62 R2 R4 R64 R66 T13 T25 T34 T38 T51 T55 U1 U67 V10 V15 V28 V32 V36 V40 V53 V58 V6 V62 W3 W65 Y13 Y17 Y21 Y25 Y30 Y43 Y47 Y51 Y55 BF38 J58

1.70-1.95V @134mA MAX
PP1V8_SDRAM

C1615 2.2UF 20% 6.3V X5R-CERM 0201-1 ROOM=SOC
C1605 2.2UF 20% 6.3V X5R-CERM 0201-1 ROOM=SOC
C1608 2.2UF 20% 6.3V X5R-CERM 0201-1 ROOM=SOC
C1612 2.2UF 20% 6.3V X5R-CERM 0201-1 ROOM=SOC

VDD1: AM1 AM67 BB1 BB67 C3 C65 CK3 CK65

1.62-1.98V @43mA MAX
PP1V8

C1602 10UF 20% 6.3V CERM-X5R 0402-9 ROOM=SOC
C1607 2.2UF 20% 6.3V X5R-CERM 0201-1 ROOM=SOC
C1610 2.2UF 20% 6.3V X5R-CERM 0201-1 ROOM=SOC
C1614 2.2UF 20% 6.3V X5R-CERM 0201-1 ROOM=SOC

VDDIO18_GRP1: AJ62 AN62 AU62 BA62 BF62
VDDIO18_GRP2: G40 G45 G49 G53
VDDIO18_GRP3: AD6 AJ6 AN6 BA6 BF6
VDDIO18_GRP4: CE19 CE23
VDDIO18_GRP10: CE28 CE32 CE34 CE36 CE43 CE38

PP1V8_SDRAM
1.62-1.98V @10mA MAX

C1603 2.2UF 20% 6.3V X5R-CERM 0201-1 ROOM=SOC
C1601 0.1UF 20% 6.3V X5R-CERM 01005 ROOM=SOC

1.62-1.98V @2mA MAX
VDD18_TSADC0 AR23
VDD18_TSADC1 BK19
VDD18_TSADC2 AF21
VDD18_TSADC3 J36
VDD18_TSADC4 CE21
VDD18_TSADC5 BF60

1.62-1.98V @1mA MAX
VDD18_FMON CG9

1.62-1.98V @1mA MAX
VDD18_LPOSC CC40

PP1V2_REF
TBD-TBDV @30mA MAX
C1611 2.2UF 20% 6.3V X5R-CERM 0201-1 ROOM=SOC

VDD12_CPU_UVD AU23
VDD12_GPU_UVD T28
VDD12_SOC_UVD Y38
VDD12_PLL_CPU BA25

PP1V2_SOC
R1602 0.00 1/32W MF 01005 ROOM=SOC
VDD12_PLL_CPU:1.14-1.26V @13mA MAX
PP1V2_PLL_CPU

C1606 0.1UF 20% 6.3V X5R-CERM 01005 ROOM=SOC

VDD12_PLL_SOC Y32 AD36 AD38 Y34

R1601 0.00 1/32W MF 01005 ROOM=SOC
VDD12_PLL_SOC:1.14-1.26V @31mA MAX
PP1V2_PLL_SOC

C1604 2.2UF 20% 6.3V X5R-CERM 0201-1 ROOM=SOC
C1609 0.1UF 20% 6.3V X5R-CERM 01005 ROOM=SOC
C1613 0.1UF 20% 6.3V X5R-CERM 01005 ROOM=SOC

VDD18_EFUSE1 CG7
VDD18_EFUSE2 G34
CKPLUS_WAIVE=PWRTERM2GND
CKPLUS_WAIVE=PWRTERM2GND

NotebookSchematics.com

PAGE TITLE
SOC:POWER (3/3)

Apple Inc.

DRAWING NUMBER 051-00482
SIZE D
REVISION 8.0.0
BRANCH
PAGE 16 OF 53
SHEET 16 OF 81

NOTICE OF PROPRIETARY PROPERTY:
THE INFORMATION CONTAINED HEREIN IS THE PROPRIETARY PROPERTY OF APPLE INC.
THE POSESSOR AGREES TO THE FOLLOWING:
I TO MAINTAIN THIS DOCUMENT IN CONFIDENCE
II NOT TO REPRODUCE OR COPY IT
III NOT TO REVEAL OR PUBLISH IT IN WHOLE OR PART
IV ALL RIGHTS RESERVED

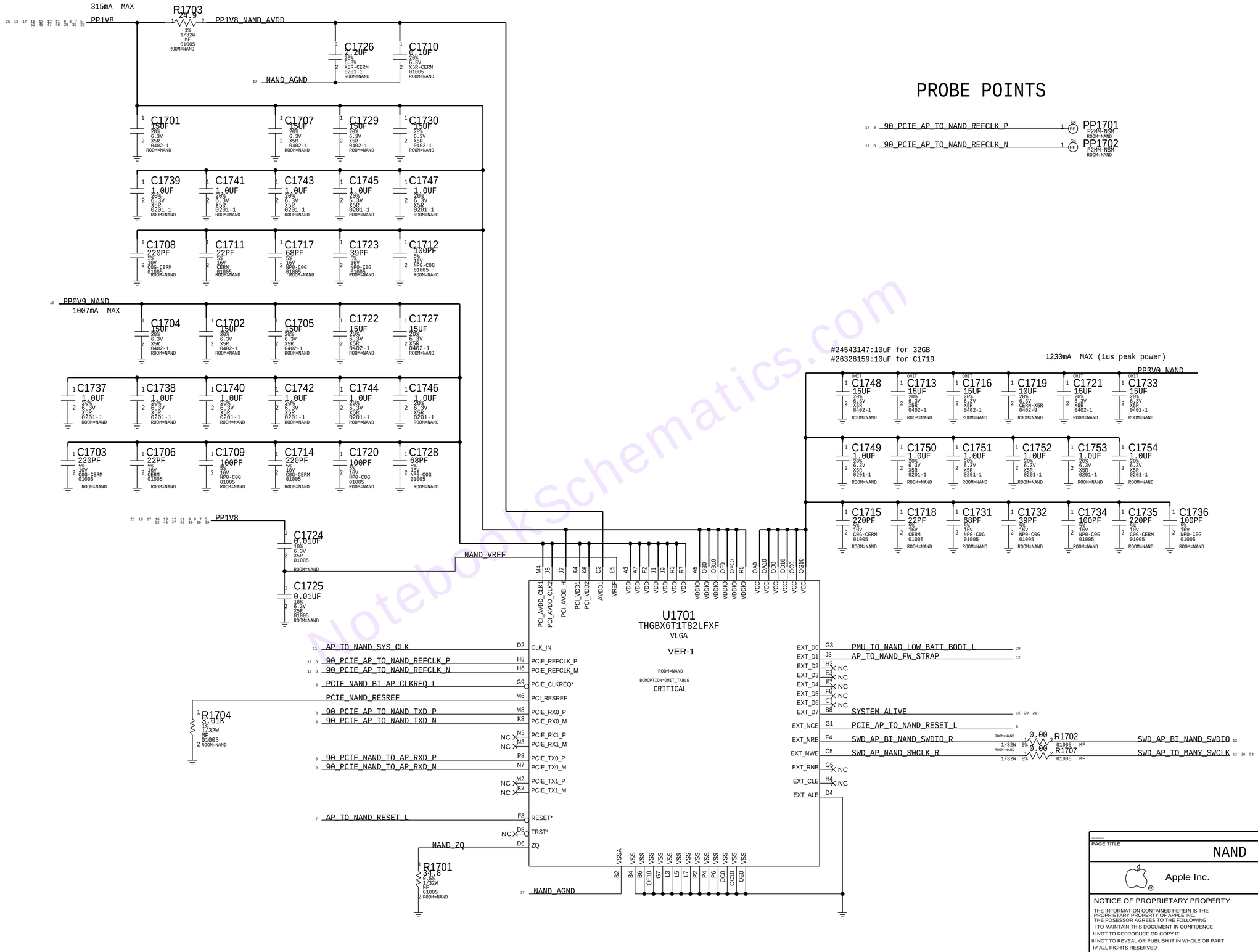


NotebookSchematics.com

PAGE TITLE

# NAND

Apple Inc.

DRAWING NUMBER 051-00482 | SIZE D

REVISION 8.0.0

BRANCH

PAGE 17 OF 53

SHEET 17 OF 81

NOTICE OF PROPRIETARY PROPERTY:

THE INFORMATION CONTAINED HEREIN IS THE PROPRIETARY PROPERTY OF APPLE INC.
THE POSESSOR AGREES TO THE FOLLOWING:
I TO MAINTAIN THIS DOCUMENT IN CONFIDENCE
II NOT TO REPRODUCE OR COPY IT
III NOT TO REVEAL OR PUBLISH IT IN WHOLE OR PART
IV ALL RIGHTS RESERVED

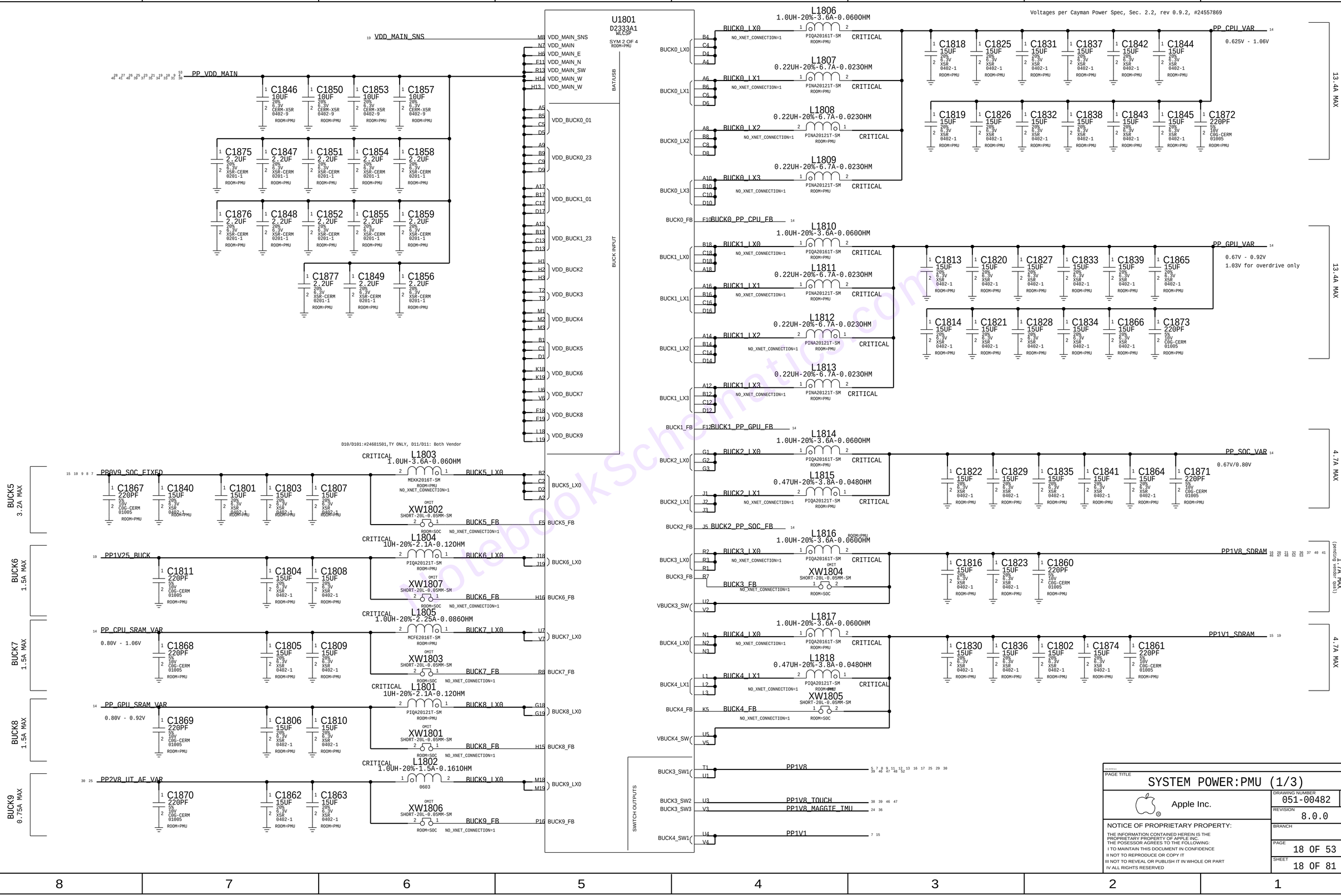
U1801
D2333A1
WLCSP
SYM 2 OF 4
ROOM=PMU
BAT/USB
BUCK INPUT
SWITCH OUTPUTS
VDD_MAIN_SNS
VDD_MAIN
VDD_MAIN_E
VDD_MAIN_N
VDD_MAIN_SW
VDD_MAIN_W
VDD_MAIN_W
VDD_BUCK0_01
VDD_BUCK0_23
VDD_BUCK1_01
VDD_BUCK1_23
VDD_BUCK2
VDD_BUCK3
VDD_BUCK4
VDD_BUCK5
VDD_BUCK6
VDD_BUCK7
VDD_BUCK8
VDD_BUCK9
PP_VDD_MAIN
C1846 10UF 20% 6.3V CERM-X5R 0402-9
C1850 10UF 20% 6.3V CERM-X5R 0402-9
C1853 10UF 20% 6.3V CERM-X5R 0402-9
C1857 10UF 20% 6.3V CERM-X5R 0402-9
C1875 2.2UF 20% 6.3V X5R-CERM 0201-1
C1847 2.2UF 20% 6.3V X5R-CERM 0201-1
C1851 2.2UF 20% 6.3V X5R-CERM 0201-1
C1854 2.2UF 20% 6.3V X5R-CERM 0201-1
C1858 2.2UF 20% 6.3V X5R-CERM 0201-1
C1876 2.2UF 20% 6.3V X5R-CERM 0201-1
C1848 2.2UF 20% 6.3V X5R-CERM 0201-1
C1852 2.2UF 20% 6.3V X5R-CERM 0201-1
C1855 2.2UF 20% 6.3V X5R-CERM 0201-1
C1859 2.2UF 20% 6.3V X5R-CERM 0201-1
C1877 2.2UF 20% 6.3V X5R-CERM 0201-1
C1849 2.2UF 20% 6.3V X5R-CERM 0201-1
C1856 2.2UF 20% 6.3V X5R-CERM 0201-1
ROOM=PMU
D10/D101:#24681501,TY ONLY, D11/D11: Both Vendor
BUCK5 3.2A MAX
PP0V9_SOC_FIXED
CRITICAL L1803 1.0UH-3.6A-0.060HM
MEKK2016T-SM
NO_XNET_CONNECTION=1
BUCK5_LX0
OMIT XW1802
SHORT-20L-0.05MM-SM
ROOM=SOC
NO_XNET_CONNECTION=1
BUCK5_FB
C1867 220PF 5% 10V C0G-CERM 01005
C1840 15UF 20% 6.3V X5R 0402-1
C1801 15UF 20% 6.3V X5R 0402-1
C1803 15UF 20% 6.3V X5R 0402-1
C1807 15UF 20% 6.3V X5R 0402-1
BUCK6 1.5A MAX
PP1V25_BUCK
CRITICAL L1804 1UH-20%-2.1A-0.120HM
PIQA20121T-SM
BUCK6_LX0
OMIT XW1807
BUCK6_FB
C1811 220PF 5% 10V C0G-CERM 01005
C1804 15UF 20% 6.3V X5R 0402-1
C1808 15UF 20% 6.3V X5R 0402-1
BUCK7 1.5A MAX
PP_CPU_SRAM_VAR
0.80V - 1.06V
CRITICAL L1805 1.0UH-20%-2.25A-0.086OHM
MCFE2016T-SM
BUCK7_LX0
OMIT XW1803
BUCK7_FB
C1868 220PF 5% 10V C0G-CERM 01005
C1805 15UF 20% 6.3V X5R 0402-1
C1809 15UF 20% 6.3V X5R 0402-1
BUCK8 1.5A MAX
PP_GPU_SRAM_VAR
0.80V - 0.92V
CRITICAL L1801 1UH-20%-2.1A-0.120HM
PIQA20121T-SM
BUCK8_LX0
OMIT XW1801
BUCK8_FB
C1869 220PF 5% 10V C0G-CERM 01005
C1806 15UF 20% 6.3V X5R 0402-1
C1810 15UF 20% 6.3V X5R 0402-1
BUCK9 0.75A MAX
PP2V8_UT_AF_VAR
CRITICAL L1802 1.0UH-20%-1.5A-0.161OHM
0603
BUCK9_LX0
OMIT XW1806
BUCK9_FB
C1870 220PF 5% 10V C0G-CERM 01005
C1862 15UF 20% 6.3V X5R 0402-1
C1863 15UF 20% 6.3V X5R 0402-1
L1806 1.0UH-20%-3.6A-0.060OHM
BUCK0_LX0
PIQA20161T-SM
CRITICAL
L1807 0.22UH-20%-6.7A-0.023OHM
BUCK0_LX1
PINA20121T-SM
L1808 0.22UH-20%-6.7A-0.023OHM
BUCK0_LX2
L1809 0.22UH-20%-6.7A-0.023OHM
BUCK0_LX3
BUCK0_FB
BUCK0_PP_CPU_FB
Voltages per Cayman Power Spec, Sec. 2.2, rev 0.9.2, #24557869
PP_CPU_VAR
0.625V - 1.06V
C1818 15UF 20% 6.3V X5R 0402-1
C1825 15UF 20% 6.3V X5R 0402-1
C1831 15UF 20% 6.3V X5R 0402-1
C1837 15UF 20% 6.3V X5R 0402-1
C1842 15UF 20% 6.3V X5R 0402-1
C1844 15UF 20% 6.3V X5R 0402-1
C1819 15UF 20% 6.3V X5R 0402-1
C1826 15UF 20% 6.3V X5R 0402-1
C1832 15UF 20% 6.3V X5R 0402-1
C1838 15UF 20% 6.3V X5R 0402-1
C1843 15UF 20% 6.3V X5R 0402-1
C1845 15UF 20% 6.3V X5R 0402-1
C1872 220PF 5% 10V C0G-CERM 01005
BUCK0 13.4A MAX
L1810 1.0UH-20%-3.6A-0.060OHM
BUCK1_LX0
PIQA20161T-SM
CRITICAL
L1811 0.22UH-20%-6.7A-0.023OHM
BUCK1_LX1
PINA20121T-SM
L1812 0.22UH-20%-6.7A-0.023OHM
BUCK1_LX2
L1813 0.22UH-20%-6.7A-0.023OHM
BUCK1_LX3
BUCK1_FB
BUCK1_PP_GPU_FB
PP_GPU_VAR
0.67V - 0.92V
1.03V for overdrive only
C1813 15UF 20% 6.3V X5R 0402-1
C1820 15UF 20% 6.3V X5R 0402-1
C1827 15UF 20% 6.3V X5R 0402-1
C1833 15UF 20% 6.3V X5R 0402-1
C1839 15UF 20% 6.3V X5R 0402-1
C1865 15UF 20% 6.3V X5R 0402-1
C1814 15UF 20% 6.3V X5R 0402-1
C1821 15UF 20% 6.3V X5R 0402-1
C1828 15UF 20% 6.3V X5R 0402-1
C1834 15UF 20% 6.3V X5R 0402-1
C1866 15UF 20% 6.3V X5R 0402-1
C1873 220PF 5% 10V C0G-CERM 01005
BUCK1 13.4A MAX
L1814 1.0UH-20%-3.6A-0.060OHM
BUCK2_LX0
PIQA20161T-SM
CRITICAL
L1815 0.47UH-20%-3.8A-0.048OHM
BUCK2_LX1
PIQA20121T-SM
BUCK2_FB
BUCK2_PP_SOC_FB
PP_SOC_VAR
0.67V/0.80V
C1822 15UF 20% 6.3V X5R 0402-1
C1829 15UF 20% 6.3V X5R 0402-1
C1835 15UF 20% 6.3V X5R 0402-1
C1841 15UF 20% 6.3V X5R 0402-1
C1864 15UF 20% 6.3V X5R 0402-1
C1871 220PF 5% 10V C0G-CERM 01005
BUCK2 4.7A MAX
L1816 1.0UH-20%-3.6A-0.060OHM
BUCK3_LX0
PIQA20161T-SM
CRITICAL
OMIT XW1804
BUCK3_FB
VBUCK3_SW
PP1V8_SDRAM
C1816 15UF 20% 6.3V X5R 0402-1
C1823 15UF 20% 6.3V X5R 0402-1
C1860 220PF 5% 10V C0G-CERM 01005
BUCK3 1.7A MAX (pending vendor qual)
L1817 1.0UH-20%-3.6A-0.060OHM
BUCK4_LX0
PIQA20161T-SM
CRITICAL
L1818 0.47UH-20%-3.8A-0.048OHM
BUCK4_LX1
PIQA20121T-SM
OMIT XW1805
BUCK4_FB
VBUCK4_SW
PP1V1_SDRAM
C1830 15UF 20% 6.3V X5R 0402-1
C1836 15UF 20% 6.3V X5R 0402-1
C1802 15UF 20% 6.3V X5R 0402-1
C1874 15UF 20% 6.3V X5R 0402-1
C1861 220PF 5% 10V C0G-CERM 01005
BUCK4 4.7A MAX
BUCK3_SW1
PP1V8
BUCK3_SW2
PP1V8_TOUCH
BUCK3_SW3
PP1V8_MAGGIE_TMU
BUCK4_SW1
PP1V1
NO_XNET_CONNECTION=1
NO_XNET_CONNECTION
ROOM=PMU
ROOM=SOC
CRITICAL
OMIT
NOTICE OF PROPRIETARY PROPERTY:
THE INFORMATION CONTAINED HEREIN IS THE PROPRIETARY PROPERTY OF APPLE INC.
THE POSESSOR AGREES TO THE FOLLOWING:
I TO MAINTAIN THIS DOCUMENT IN CONFIDENCE
II NOT TO REPRODUCE OR COPY IT
III NOT TO REVEAL OR PUBLISH IT IN WHOLE OR PART
IV ALL RIGHTS RESERVED
PAGE TITLE
SYSTEM POWER:PMU (1/3)
Apple Inc.
DRAWING NUMBER 051-00482
SIZE D
REVISION 8.0.0
BRANCH
PAGE 18 OF 53
SHEET 18 OF 81

## ADELYN LDO SPECS

| LDO# | ADJ.RANGE, LOW | ADJ.RANGE, HI | ACCURACY | MAX.CURRENT |
|---|---|---|---|---|
| LDO1 (Ca) | 1.2-2.475V | 2.4-3.675V | +/-1.4% | 50mA |
| LDO2 (Ca) | 1.2-2.475V | 2.4-3.675V | +/-2.5% | 50mA |
| LDO3 (Ca) | 1.2-2.475V | 2.4-3.675V | +/-2.5% | 50mA |
| LDO4 (D) | 0.7-1.2V | | +/-2.5% | 60mA |
| LDO5 (F) | 2.5-3.6V(tbc) | | +/-75mV | 1000mA |
| LDO6 (Cb) | 1.2-2.475V | 2.4-3.675V | +/-2.5% | 250mA (500/100mA in bypass) |
| LDO7 (Cb) | 1.2-2.475V | 2.4-3.675V | +/-30mV | 250mA |
| LDO8 (Cb) | 1.2-2.475V | 2.4-3.675V | +/-30mV | 250mA |
| LDO9 (Cb) | 1.2-2.475V | 2.4-3.675V | +/-25mV | 250mA |
| LDO10 (Ga) | 0.7-1.2V | | +/-4.5% | 1150mA |

| LDO# | ADJ.RANGE, LOW | ADJ.RANGE, HI | ACCURACY | MAX.CURRENT |
|---|---|---|---|---|
| LDO11 (Cb) | 1.2-2.475V | 2.4-3.675V | +/-30mV | 250mA |
| LDO12 (E) | 1.8V | | +/-5% | 10mA |
| LDO13 (Cb) | 1.2-2.475V | 2.4-3.675V | +/-30mV | 250mA |
| LDO14 (Gb) | 0.7-1.4V | | +/-3.0% | 400mA |
| LDO15 (Ca) | 1.2-2.475V | 2.4-3.675V | +/-2.5% | 50mA |
| LDO16 (Cb) | 1.2-2.475V | 2.4-3.675V | +/-30mV | 250mA |
| LDO17 (Ca) | 1.2-2.475V | 2.4-3.675V | +/-2.5% | 50mA |
| LDO18 (Gb) | 0.7-1.4V | | +/-3.0% | 400mA |
| LDO19 (Gb) | 0.7-1.4V | | +/-3.0% | 400mA |
| LDO_RTC | 2.5V | | +/-2.0% | 10mA |
| BUF_1V2 | 1.2V | | +/-5.0% | 10mA |

PP_VDD_MAIN
OMIT XW1901 SHORT-20L-0.05MM-SM ROOM=PMU NO_XNET_CONNECTION
VDD_MAIN_SNS
OMIT XW1902 SHORT-20L-0.05MM-SM ROOM=PMU
PMU_PRE_UVLO_DET
C1901 10UF 20% 6.3V X5R 0402-1 ROOM=PMU
C1910 10UF 20% 6.3V CERM-X5R 0402-9 ROOM=PMU
C1914 10UF 20% 6.3V CERM-X5R 0402-9 ROOM=PMU
C1911 10UF 20% 6.3V CERM-X5R 0402-9 ROOM=PMU
C1907 10UF 20% 6.3V CERM-X5R 0402-9 ROOM=PMU

PP_VDD_MAIN
PP_VDD_BOOST
C1915 15UF 20% 6.3V X5R 0402-1 ROOM=PMU
C1912 15UF 20% 6.3V X5R 0402-1 ROOM=PMU
PP1V1_SDRAM
C1908 2.2UF 20% 6.3V X5R-CERM 0201-1 ROOM=PMU
C1913 2.2UF 20% 6.3V X5R-CERM 0201-1 ROOM=PMU
PP1V25_BUCK

U1801 D2333A1 WLCSP SYM 1 OF 4 (LDO INPUT / LDO)

| | | |
|---|---|---|
| R12 | VDD_LDO1 | |
| V11 | VDD_LDO2_15 | |
| R10 | VDD_LDO3_17 | |
| R16 | VDD_LDO4 | |
| V9 | VDD_LDO5 | |
| V10 | | |
| R14 | VDD_LDO6_BYP | |
| P19 | VDD_LDO7_8 | |
| R19 | VDD_LDO9 | |
| R9 | VDD_LDO10 | |
| V13 | VDD_LDO11_13 | |
| V16 | VDD_LDO14 | |
| T19 | VDD_LDO16 | |
| V17 | VDD_LDO18 | |
| V18 | VDD_LDO19 | |
| U19 | VDD_LDO19 | |
| G15 | VPP_OTP | |
| J6 | TP_DET | NC |

| | | | |
|---|---|---|---|
| VLDO1 | T12 | PP3V3_USB | LDO1 |
| VLDO2 | U11 | PP1V8_VA | LDO2 |
| VLDO3 | T10 | PP3V0_ALS_APS_CONVOY | LDO3 |
| VLDO4 | T16 | PP0V8_AOP | LDO4 |
| VLDO5_0 | U9 | PP3V0_NAND | LDO5 |
| VLDO5_1 | U10 | | |
| VLDO6 | T14 | PP_ACC_VAR | LDO6 |
| VBYPASS | R15 | | |
| VLDO7 | T17 | PP3V0_TRISTAR_ANT_PROX | LDO7 |
| VLDO8 | P18 | PP2V9_NH_AVDD | LDO8 |
| VLDO9 | R18 | PP1V8_HAWKING | LDO9 |
| VLDO9_FB | P17 | | |
| VLDO10 | T9 | PP0V9_NAND | LDO10 |
| VLDO11 | U13 | XNC | LDO11 |
| VLDO12 | P7 | PP1V8_ALWAYS | LDO12 |
| VLDO13 | U14 | PP3V0_MESA | LDO13 |
| VLDO14 | U16 | PP1V2_SOC | LDO14 |
| VLDO15 | U12 | PP1V8_MESA | LDO15 |
| VLDO16 | T18 | #24989262 PP_LDO17 | LDO16 |
| VLDO17 | T11 | XNC | LDO17 |
| VLDO18 | U17 | PP1V2_UT_DVDD | LDO18 |
| VLDO19 | U18 | PP1V2_NH_NV_DVDD | LDO19 |
| VBUF_1V2 | P8 | PP1V2_REF | VBUF_1V2 |
| VPUMP | R5 | | |

New for ADELYN

R1901 0.00 1/20W 1% MF 0201 NOSTUFF

C1918 2.2UF 20% 6.3V X5R-CERM 0201-1 ROOM=PMU
C1933 1.0UF 20% 6.3V X5R 0201-1 ROOM=PMU
C1923 2.2UF 20% 6.3V X5R-CERM 0201-1 ROOM=PMU
C1926 2.2UF 20% 6.3V X5R-CERM 0201-1 ROOM=PMU
C1935 1.0UF 20% 6.3V X5R 0201-1 ROOM=PMU
C1930 2.2UF 20% 6.3V X5R-CERM 0201-1 ROOM=PMU
C1932 0.22UF 20% 6.3V X5R 01005-1 ROOM=PMU
C1916 2.2UF 20% 6.3V X5R-CERM 0201-1 ROOM=PMU
C1921 2.2UF 20% 6.3V X5R-CERM 0201-1 ROOM=PMU
C1922 2.2UF 20% 6.3V X5R-CERM 0201-1 ROOM=PMU
C1925 1.0UF 20% 6.3V X5R 0201-1 ROOM=PMU
C1927 2.2UF 20% 6.3V X5R-CERM 0201-1 ROOM=PMU
C1904 2.2UF 20% 6.3V X5R-CERM 0201-1 ROOM=PMU
C1919 2.2UF 20% 6.3V X5R-CERM 0201-1 ROOM=PMU
PMU_VPUMP
C1902 47NF 20% 6.3V X5R-CERM 01005 ROOM=PMU

VPUMP: 10nF min. @4.6V

#24989262:OTP-AO LDO17 default off,50mA Iout_max

U1801 D2333A1 WLCSP SYM 4 OF 4

| | | | |
|---|---|---|---|
| A1 | | | G17 |
| A11 | | | G4 |
| A15 | | | H17 |
| H8 | | | H18 |
| A19 | | | H19 |
| P13 | | | H4 |
| A3 | | | J17 |
| P14 | | | J4 |
| A7 | | | J8 |
| B11 | | | K1 |
| B15 | | | K17 |
| B19 | | | K2 |
| B3 | | | K3 |
| B7 | | | K4 |
| C11 | | | K8 |
| C15 | | | L17 |
| C19 | | | L4 |
| C3 | | | L8 |
| C7 | | | M17 |
| D11 | | | M4 |
| D15 | | | N17 |
| D19 | | | N18 |
| D3 | | | N19 |
| D7 | VSS | VSS | N4 |
| E1 | | | P1 |
| E10 | | | P2 |
| E11 | | | P3 |
| E12 | | | P4 |
| E13 | | | P15 |
| E14 | | | R17 |
| E15 | | | R4 |
| E16 | | | T5 |
| E17 | | | T15 |
| E18 | | | T4 |
| E19 | | | T6 |
| E2 | | | T7 |
| E3 | | | T8 |
| E4 | | | U15 |
| E5 | | | T13 |
| E6 | | | U8 |
| E7 | | | V1 |
| E8 | | | V12 |
| E9 | | | V19 |
| F1 | | | V8 |
| F17 | | | |
| F2 | | | |
| F3 | | | |
| F4 | | | |

PP_VDD_MAIN
C1905 33PF 5% 16V NP0-C0G-CERM 01005 ROOM=PMU
C1909 220PF 5% 16V C0G-CERM 01005 ROOM=PMU
PMU_VSS_RTC
U15 = PMU XTAL GND

PAGE TITLE: SYSTEM POWER:PMU (2/3)

Apple Inc.

DRAWING NUMBER: 051-00482 SIZE: D
REVISION: 8.0.0
BRANCH:
PAGE: 19 OF 53
SHEET: 19 OF 81

NOTICE OF PROPRIETARY PROPERTY:
THE INFORMATION CONTAINED HEREIN IS THE PROPRIETARY PROPERTY OF APPLE INC.
THE POSESSOR AGREES TO THE FOLLOWING:
I TO MAINTAIN THIS DOCUMENT IN CONFIDENCE
II NOT TO REPRODUCE OR COPY IT
III NOT TO REVEAL OR PUBLISH IT IN WHOLE OR PART
IV ALL RIGHTS RESERVED

NotebookSchematics.com

# BUTTON PULL-UP RESISTORS

PP1V8_SDRAM
NOSTUFF R2008 100K 5% 1/32W MF 01005 ROOM=PMU
BUTTON_RINGER_A

PP1V8_ALWAYS
NOSTUFF R2007 220K 5% 1/32W MF 01005 ROOM=PMU
BUTTON_POWER_KEY_L

PP1V8_SDRAM
NOSTUFF R2015 220K 5% 1/32W MF 01005 ROOM=PMU
BUTTON_VOL_DOWN_L

NOTE:VDROOP_DET filtering is now inside Adelyn

Button for two-finger reset: 20711463 and 21196187

PP2001 P2MM-NSM ROOM=SOC
PP2002 P2MM-NSM ROOM=SOC
PP2003 P2MM-NSM ROOM=PMU

PP1V8_SDRAM
PP1V8_ALWAYS

R2006 100K 5% 1/32W MF 01005 ROOM=PMU
R2005 100K 5% 1/32W MF 01005 ROOM=PMU
R2012 10K 5% 1/32W MF 01005 ROOM=PMU
NO_XNET_CONNECTION

C2001 1000PF 10% 16V X5R 01005 ROOM=PMU

D101/D111 ONLY: TCXO_RF Supplies 32K

R2020 100 5% 1/32W MF 01005
#24825674: Add R2020 to meet timing spec
#26169957: R2020 to 100ohm

U1801
D2333A1
WLCSP
SYM 3 OF 4

| | | | | |
|---|---|---|---|---|
| AP_TO_PMU_WDOG_RESET | P9 | RESET_IN1 | RESETS | REFS |
| TRISTAR_TO_PMU_HOST_RESET | P10 | RESET_IN2 | | |
| AP_TO_PMU_SOCHOT_L | P11 | RESET_IN3 | | |
| PMU_TO_SYSTEM_COLD_RESET_L | M5 | RESET* | | |
| | P12 | SHDN | | |
| AOP_TO_PMU_SLEEP1_REQUEST | R11 | SLEEP1_REQ | | |
| PMU_TO_AOP_SLEEP1_READY | L11 | SLEEP1_RDY | | |
| AOP_TO_PMU_ACTIVE_REQUEST | L12 | ACTIVE_REQ | | |
| PMU_TO_AOP_TRISTAR_ACTIVE_READY | J12 | ACTIVE_RDY | | |
| PMU_TO_AOP_CLK32K | M9 | SLEEP_32K | | |
| | M10 | OUT_32K | | |
| SYSTEM_ALIVE | H5 | SYS_ALIVE | | |
| LCM_TO_MANY_BSYNC (HIGH=FORCE_PWM_MODE) | L13 | FORCE_SYNC | | |
| | L10 | CRASH* | | |
| PMU_TO_AOP_IRQ_L | G5 | IRQ* | | |
| I2C1_AP_SCL | N13 | SCL | | |
| I2C_PMU_SDA_R | M13 | SDA | | |
| SPI_PMGR_TO_PMU_SCLK | N6 | SCLK | PMGR | |
| SPI_PMGR_TO_PMU_MOSI | N5 | MOSI | | |
| SPI_PMU_TO_PMGR_MISO | P5 | MISO | | |
| AP_TO_PMU_AMUX_OUT | J14 | AMUX_A0 | ADC | |
| PMU_ADC_IN | J15 | AMUX_A1 | | |
| | J16 | AMUX_A2 | | |
| BUTTON_VOL_UP_L | K16 | AMUX_A3 | | |
| | K15 | AMUX_A4 | | |
| LCM_TO_CHESTNUT_PWR_EN | K14 | AMUX_A5 | | |
| TRISTAR_TO_PMU_USB_BRICK_ID | J13 | AMUX_A6 | | |
| PP1V2_MAGGIE | K13 | AMUX_A7 | | |
| PMU_AMUX_AY | K12 | AMUX_AY | | |
| BBPMU_TO_PMU_AMUX1 | L14 | AMUX_B0 | AMUX | |
| BBPMU_TO_PMU_AMUX2 | L15 | AMUX_B1 | | |
| | L16 | AMUX_B2 | | |
| ACC_BUCK_TO_PMU_AMUX | M16 | AMUX_B3 | | |
| PMUGPIO_TO_WLAN_CLK32K | M15 | AMUX_B4 | | |
| CHESTNUT_TO_PMU_ADCMUX | M14 | AMUX_B5 | | |
| AP_TO_PMU_TEST_CLKOUT | N16 | AMUX_B6 | | |
| BBPMU_TO_PMU_AMUX3 | N15 | AMUX_B7 | | |
| PMU_AMUX_BY | N14 | AMUX_BY | | |
| FOREHEAD_NTC | R6 | TDEV1 | NTC | GPIO |
| REAR_CAMERA_NTC | M6 | TDEV2 | | |
| RADIO_PA_NTC | P6 | TDEV3 | | |
| AP_NTC | L5 | TDEV4 | | |
| | L6 | TDEV5 | | |
| PMU_TCAL | G16 | TCAL | | |
| PMU_XTAL1 | V14 | XTAL1 | XTAL | |
| PMU_XTAL2 | V15 | XTAL2 | | |
| PMU_VDD_RTC | N9 | VDD_RTC | | |

| | | | | |
|---|---|---|---|---|
| IREF | K6 | PMU_IREF | | |
| VREF | J7 | PMU_VREF | | |
| PRE_UVLO* | N10 | PMU_TO_AP_PRE_UVLO_L | | |
| VDROOP0* | G6 | PMU_TO_AP_THROTTLE_CPU_L | | |
| VDROOP1* | G7 | PMU_TO_AP_THROTTLE_GPU_L | | |
| VDROOP0_DET | F6 | AP_VDD_CPU_SENSE | | |
| VDROOP1_DET | F7 | AP_VDD_GPU_SENSE | | |
| PRE_UVLO_DET | N8 | PMU_PRE_UVLO_DET | | |
| IBAT | L7 | NC | | |
| VBAT | M7 | NC | | |
| BRICK_ID | H7 | TRISTAR_TO_PMU_USB_BRICK_ID | | |
| ADC_IN | K7 | PMU_ADC_IN | | |
| BUTTON1 | M12 | BUTTON_VOL_DOWN_L | | |
| BUTTON2 | N12 | BUTTON_POWER_KEY_L | | |
| BUTTON3 | M11 | BUTTON_RINGER_A | | |
| BUTTON4 | N13 | NC Reserved for MENU key on dev board | | |
| BUTTONO1 | H11 | PMU_TO_AP_BUF_VOL_DOWN_L | | |
| BUTTONO2 | J11 | PMU_TO_AP_BUF_POWER_KEY_L | | |
| BUTTONO3 | K11 | PMU_TO_AP_BUF_RINGER_A | | |
| GPIO1 | F16 | TIGRIS_TO_PMU_INT_L | | |
| GPIO2 | F15 | BB_TO_PMU_PCIE_HOST_WAKE_L | | |
| GPIO3 | G14 | PMU_TO_BBPMU_RESET_R_L | | |
| GPIO4 | F14 | WLAN_TO_PMU_HOST_WAKE | | |
| GPIO5 | F13 | NFC_TO_PMU_HOST_WAKE | | |
| GPIO6 | G13 | PMU_TO_NAND_LOW_BATT_BOOT_L | | |
| GPIO7 | G12 | NC_PMU_TO_GNSS_EN | | |
| GPIO8 | H12 | PMUGPIO_TO_WLAN_CLK32K | | |
| GPIO9 | G11 | PMU_TO_BT_REG_ON | | |
| GPIO10 | G10 | NC_GNSS_TO_PMU_HOST_WAKE | | |
| GPIO11 | F9 | PMU_TO_WLAN_REG_ON | | |
| GPIO12 | G9 | BT_TO_PMU_HOST_WAKE | | |
| GPIO13 | F8 | PMU_TO_CODEC_DIGLDO_PULLDN | | |
| GPIO14 | G8 | PMU_TO_ACC_BUCK_SW_EN | | |
| GPIO15 | H9 | PMU_TO_BB_USB_VBUS_DETECT | | |
| GPIO16 | H10 | PMU_TO_NFC_EN | | |
| GPIO17 | J9 | PMU_TO_AP_FORCE_DFU_R | | |
| GPIO18 | J10 | PMU_TO_BOOST_EN | | |
| GPIO19 | K9 | PMU_TO_LCM_PANICB | | |
| GPIO20 | K10 | PMU_TO_HOMER_RESET_L | | |
| GPIO21 | L9 | I2C0_AP_SCL | | |

GPIO21 = I2C SCL is for Chestnut dark current mitigation

C2006 0.22UF 20% 6.3V X5R 0201 ROOM=PMU
R2011 200K 1% 1/20W MF 201 ROOM=PMU

R2000 1.00K 5% 1/32W MF 01005 ROOM=PMU
PMU_TO_BBPMU_RESET_L

#24511807: Stuff for Carrier
R2009 0.00 0% 1/32W MF 01005
PMU_TO_AP_FORCE_DFU

RS RS RS
Sequencer controllable
RS = requires sequencer

C2013 1000PF 10% 16V X5R 01005 ROOM=PMU PLACE_NEAR=U1801:2mm

C2011 100PF 5% 16V NP0-C0G 01005 ROOM=PMU
R2010 3.32K 1% 1/20W MF 0201 ROOM=PMU

CRITICAL
Y2001 32.768KHZ-20PPM-12.5PF 1.60X1.00-SM ROOM=PMU

C2003 22PF 5% 16V C0G 01005 ROOM=PMU
C2004 22PF 5% 16V C0G 01005 ROOM=PMU

PMU_VSS_RTC

XW2001 SHORT-28L-0.65MM-SM ROOM=PMU OMIT

C2002 0.22UF 20% 6.3V X5R 0201 ROOM=PMU

FOREHEAD NTC
C2007 100PF 5% 16V NP0-C0G 01005 ROOM=PMU
R2001 10KOHM-1% 01005 ROOM=PMU
FOREHEAD_NTC_RETURN

REAR CAMERA NTC
C2008 100PF 5% 16V NP0-C0G 01005 ROOM=PMU
R2002 10KOHM-1% 01005 ROOM=PMU
RCAM_NTC_RETURN

RADIO PA NTC
C2009 100PF 5% 16V NP0-C0G 01005 ROOM=PMU
R2003 10KOHM-1% 01005 ROOM=PMU
PA_NTC_RETURN

AP NTC
C2010 100PF 5% 16V NP0-C0G 01005 ROOM=PMU
R2004 10KOHM-1% 01005 ROOM=PMU
AP_NTC_RETURN

XW2002 SHORT-28L-0.65MM-SM ROOM=SOC OMIT
XW2003 SHORT-28L-0.65MM-SM ROOM=SOC OMIT
XW2004 SHORT-28L-0.05MM-SM ROOM=SOC OMIT
XW2005 SHORT-28L-0.05MM-SM ROOM=SOC OMIT

NOTE:100PF CAPS ARE THE SAMPLING CAPS FOR PMU ADC

Notebook Schematics.com

PAGE TITLE: SYSTEM POWER:PMU (3/3)

Apple Inc.

DRAWING NUMBER: 051-00482
SIZE: D
REVISION: 8.0.0
BRANCH:
PAGE: 20 OF 53
SHEET: 20 OF 81

NOTICE OF PROPRIETARY PROPERTY:
THE INFORMATION CONTAINED HEREIN IS THE PROPRIETARY PROPERTY OF APPLE INC.
THE POSESSOR AGREES TO THE FOLLOWING:
I TO MAINTAIN THIS DOCUMENT IN CONFIDENCE
II NOT TO REPRODUCE OR COPY IT
III NOT TO REVEAL OR PUBLISH IT IN WHOLE OR PART
IV ALL RIGHTS RESERVED

# TIGRIS CHARGER

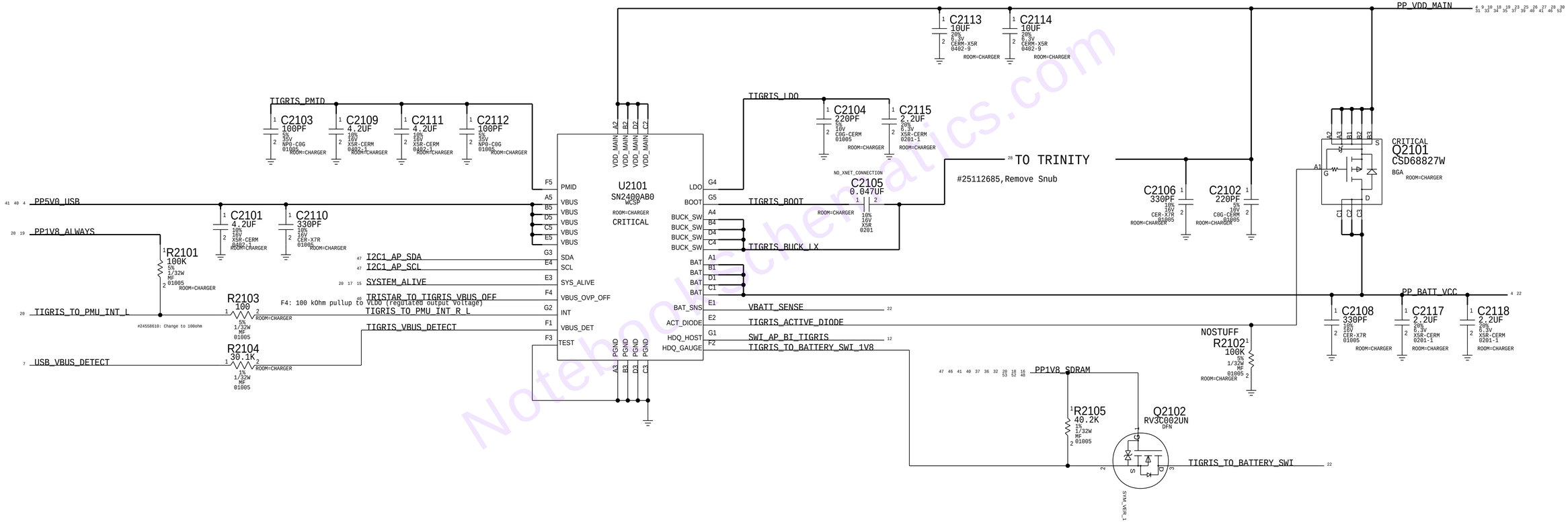


Notebookschematics.com

PAGE TITLE

SYSTEM POWER:CHARGER

Apple Inc.

DRAWING NUMBER 051-00482

SIZE D

REVISION 8.0.0

BRANCH

PAGE 21 OF 53

SHEET 21 OF 81

NOTICE OF PROPRIETARY PROPERTY:

THE INFORMATION CONTAINED HEREIN IS THE PROPRIETARY PROPERTY OF APPLE INC.
THE POSESSOR AGREES TO THE FOLLOWING:
I TO MAINTAIN THIS DOCUMENT IN CONFIDENCE
II NOT TO REPRODUCE OR COPY IT
III NOT TO REVEAL OR PUBLISH IT IN WHOLE OR PART
IV ALL RIGHTS RESERVED

# BATTERY CONNECTOR

THIS ONE ON MLB --->  516S00172 (matches d10 mlb MCO rev 27)

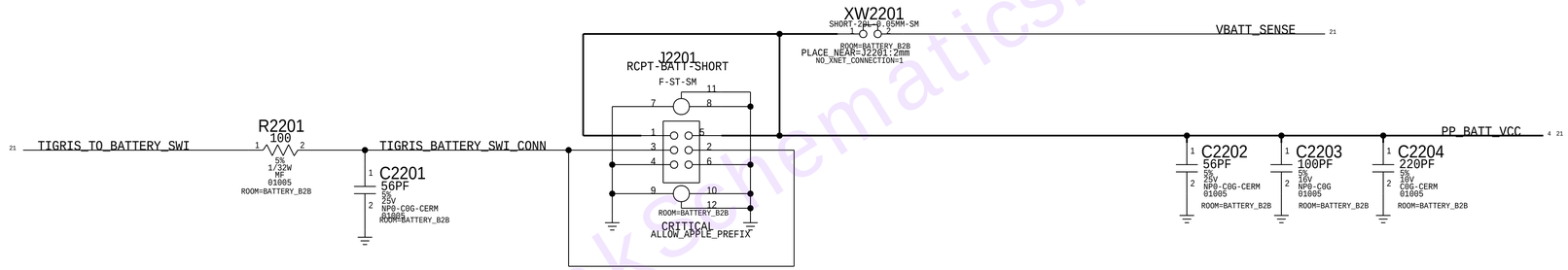


Notebookschematics.com

PAGE TITLE

SYSTEM POWER:BATTERY CONN

Apple Inc.

DRAWING NUMBER 051-00482

SIZE D

REVISION 8.0.0

BRANCH

PAGE 22 OF 53

SHEET 22 OF 81

NOTICE OF PROPRIETARY PROPERTY:

THE INFORMATION CONTAINED HEREIN IS THE PROPRIETARY PROPERTY OF APPLE INC.
THE POSESSOR AGREES TO THE FOLLOWING:
I TO MAINTAIN THIS DOCUMENT IN CONFIDENCE
II NOT TO REPRODUCE OR COPY IT
III NOT TO REVEAL OR PUBLISH IT IN WHOLE OR PART
IV ALL RIGHTS RESERVED

# BOOST

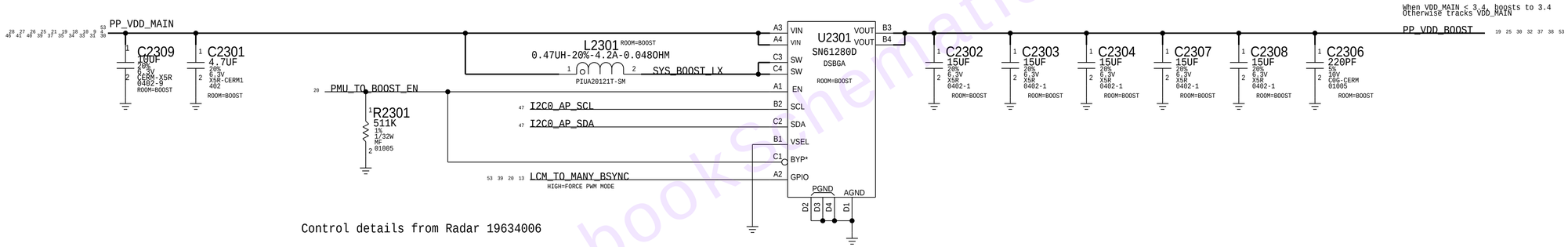


Control details from Radar 19634006

Notebookschematics.com

PAGE TITLE

SYSTEM POWER:BOOST

Apple Inc.

DRAWING NUMBER 051-00482

SIZE D

REVISION 8.0.0

BRANCH

PAGE 23 OF 53

SHEET 23 OF 81

NOTICE OF PROPRIETARY PROPERTY:

THE INFORMATION CONTAINED HEREIN IS THE PROPRIETARY PROPERTY OF APPLE INC.
THE POSESSOR AGREES TO THE FOLLOWING:
I TO MAINTAIN THIS DOCUMENT IN CONFIDENCE
II NOT TO REPRODUCE OR COPY IT
III NOT TO REVEAL OR PUBLISH IT IN WHOLE OR PART
IV ALL RIGHTS RESERVED

# CARBON - ACCEL & GYRO

INVENSENSE, MPU-6800: C2403=0.1UF

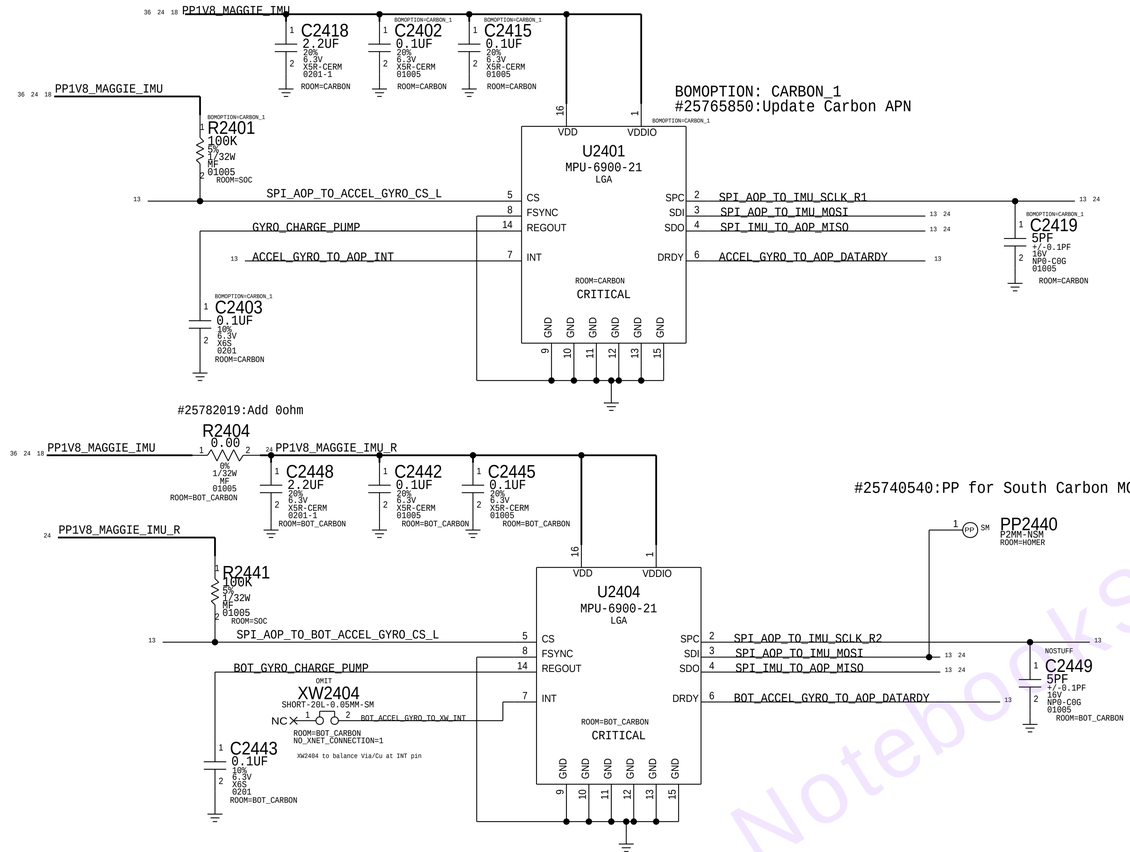


#25782019:Add 0ohm




#25740540:PP for South Carbon MOSI




# MAGNESIUM - COMPASS

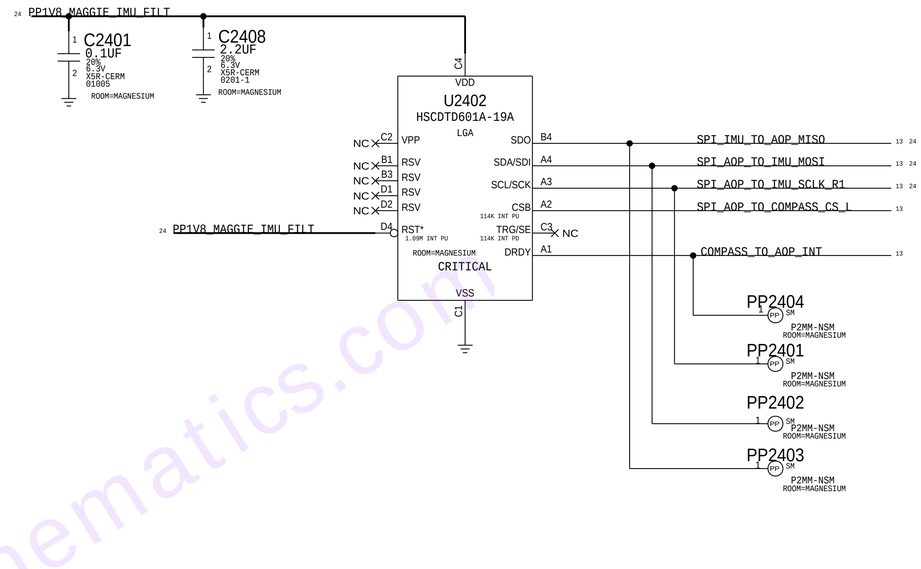


# PHOSPHORUS

#24593845

BOSCH (APN:338S00188): nostuff C2420/C2421/C2422/C2423 and R2403 PU
ST (APN:338S00230): stuff C2420-C2423, C2420R2422 with 155S00017, stuff R2403 PU
C2420=4pF(131S0253),C2405=3pF(131S0251) per #25691124

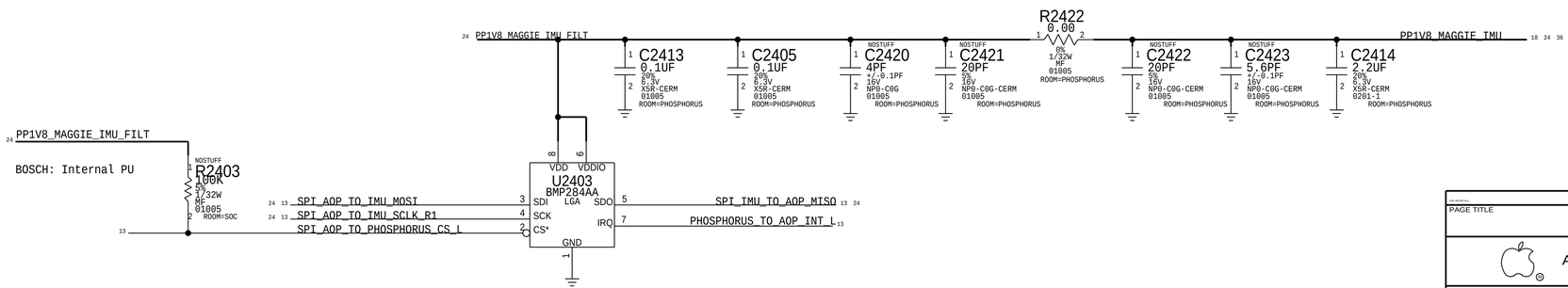


NotebookSchematics.com

PAGE TITLE: SENSORS

Apple Inc.

DRAWING NUMBER: 051-00482 | SIZE: D
REVISION: 8.0.0
BRANCH:
PAGE: 24 OF 53
SHEET: 24 OF 81

NOTICE OF PROPRIETARY PROPERTY:
THE INFORMATION CONTAINED HEREIN IS THE PROPRIETARY PROPERTY OF APPLE INC.
THE POSESSOR AGREES TO THE FOLLOWING:
I TO MAINTAIN THIS DOCUMENT IN CONFIDENCE
II NOT TO REPRODUCE OR COPY IT
III NOT TO REVEAL OR PUBLISH IT IN WHOLE OR PART
IV ALL RIGHTS RESERVED

# UTAH POWER

Scrub voltage selection

NOTE: OUTPUT IMPDEANCE MUST BE >0.005-OHM
IN ORDER TO MEET CAP ESR REQUIREMENT PER LDO SPEC.
VENDOR ALSO RECOMMENDS CIN = COUT FOR STABILITY

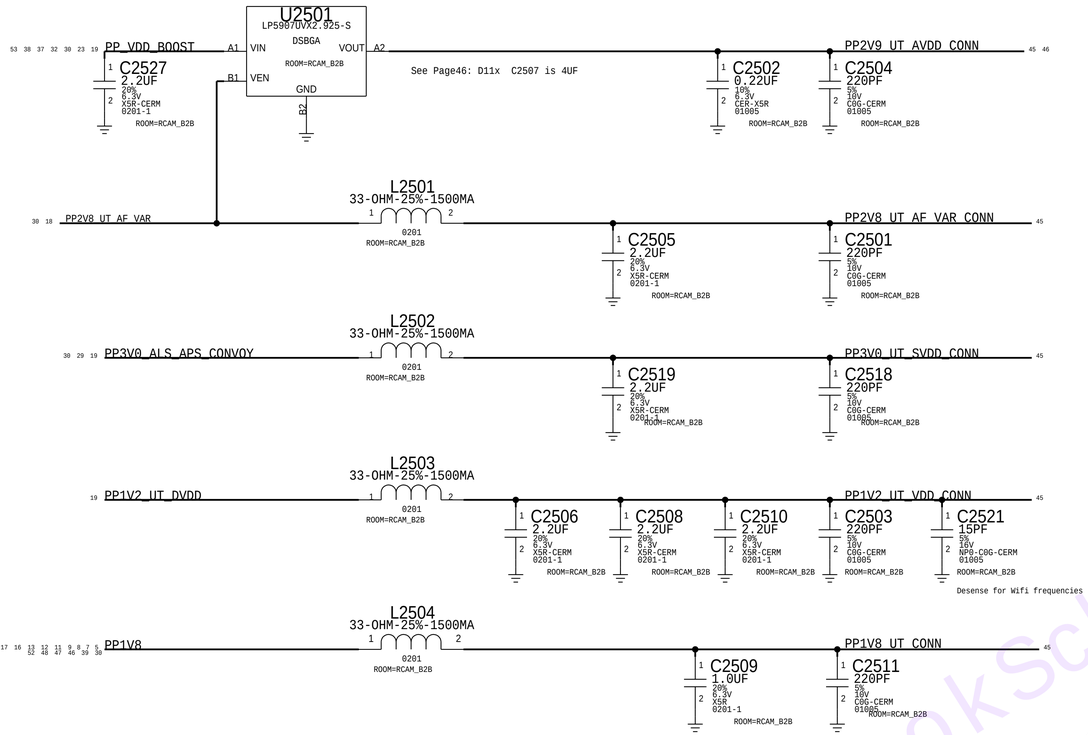


# IO FILTERS

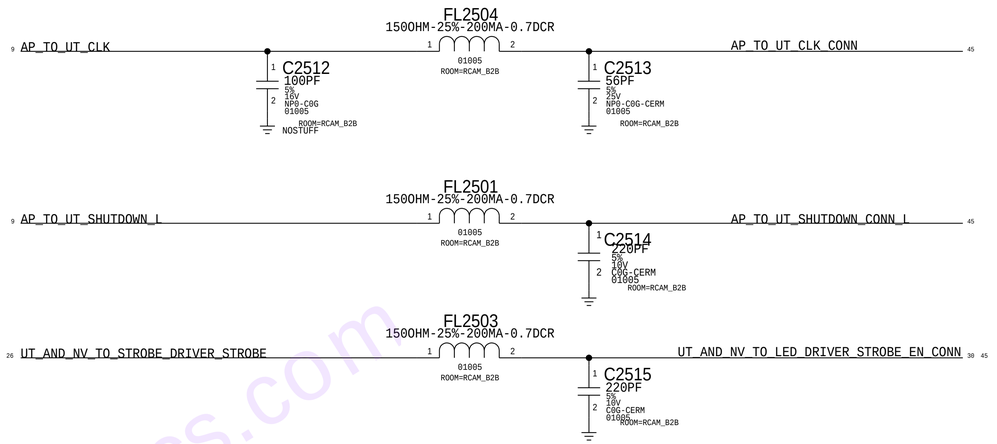


# LPDP FILTERS

AC return path for LPDP which is referenced to GND and VDD_MAIN

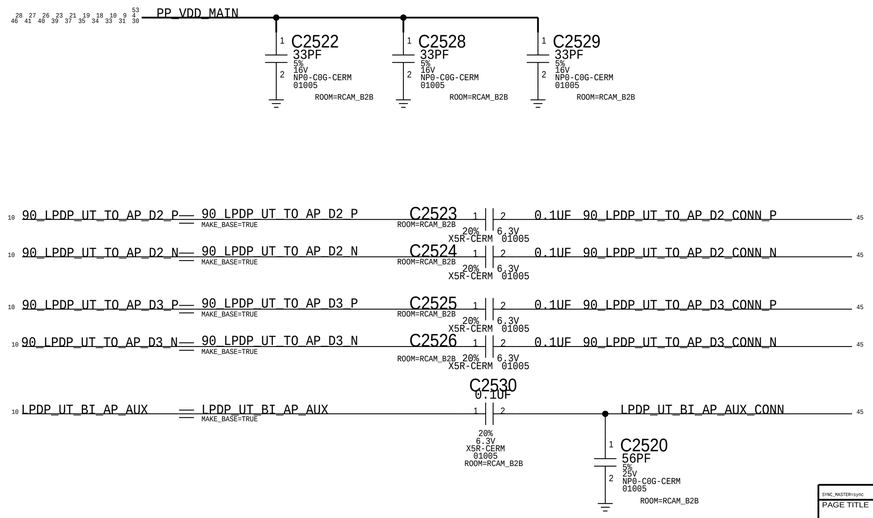


Notebookschematics.com

SYNC_MASTER=sync SYNC_DATE=05/17/2016

PAGE TITLE

## B2B FILTERS: UTAH

Apple Inc.

DRAWING NUMBER 051-00482 SIZE D

REVISION 8.0.0

BRANCH

PAGE 25 OF 53

SHEET 25 OF 81

NOTICE OF PROPRIETARY PROPERTY:
THE INFORMATION CONTAINED HEREIN IS THE PROPRIETARY PROPERTY OF APPLE INC.
THE POSESSOR AGREES TO THE FOLLOWING:
I TO MAINTAIN THIS DOCUMENT IN CONFIDENCE
II NOT TO REPRODUCE OR COPY IT
III NOT TO REVEAL OR PUBLISH IT IN WHOLE OR PART
IV ALL RIGHTS RESERVED

# STROBE DRIVERS INSIDE NEO SIP MODULE

D10/sip_neo

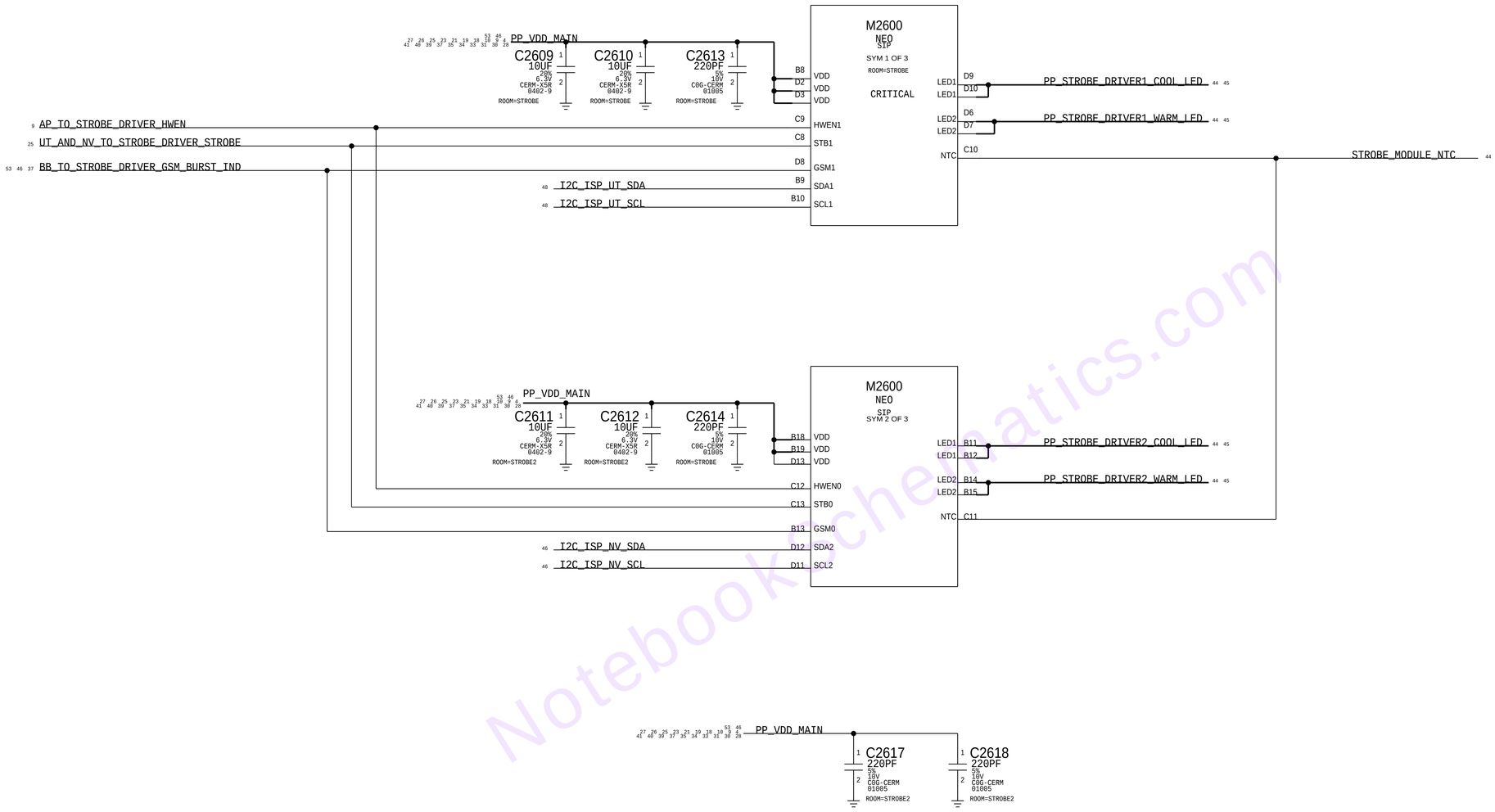





AC return path for plane edge termination, which occurs near the Strobe modules.




Notebookschematics.com

CDS_LIB=apple

PAGE TITLE

## CAMERA:STROBE DRIVER

Apple Inc.

DRAWING NUMBER 051-00482 | SIZE D

REVISION 8.0.0

BRANCH

PAGE 26 OF 53

SHEET 26 OF 81

NOTICE OF PROPRIETARY PROPERTY:

THE INFORMATION CONTAINED HEREIN IS THE PROPRIETARY PROPERTY OF APPLE INC.
THE POSESSOR AGREES TO THE FOLLOWING:
I TO MAINTAIN THIS DOCUMENT IN CONFIDENCE
II NOT TO REPRODUCE OR COPY IT
III NOT TO REVEAL OR PUBLISH IT IN WHOLE OR PART
IV ALL RIGHTS RESERVED

# ACCESSORY BUCK

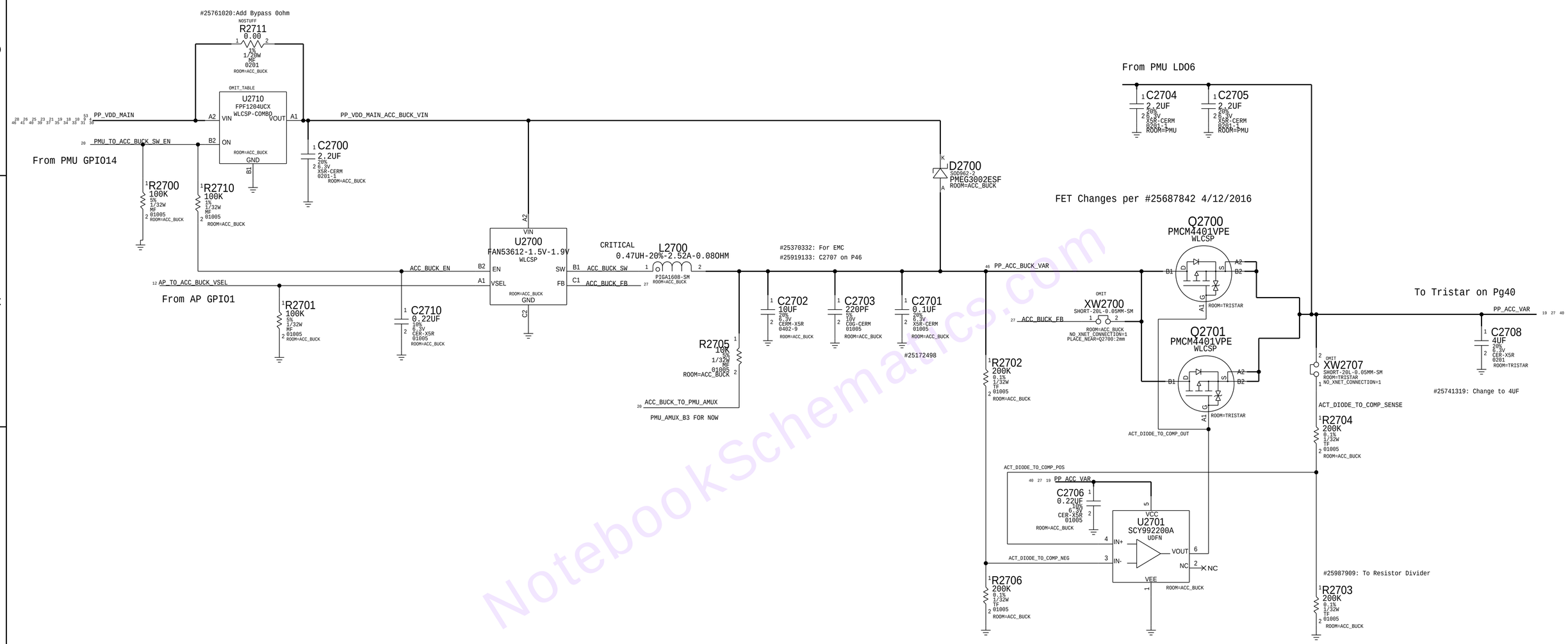


NotebookSchematics.com

SYNC_MASTER=sync SYNC_DATE=05/17/2016

PAGE TITLE

## Accessory: Buck Circuit

Apple Inc.

DRAWING NUMBER 051-00482 SIZE D

REVISION 8.0.0

BRANCH

PAGE 27 OF 53

SHEET 27 OF 81

NOTICE OF PROPRIETARY PROPERTY:
THE INFORMATION CONTAINED HEREIN IS THE PROPRIETARY PROPERTY OF APPLE INC.
THE POSESSOR AGREES TO THE FOLLOWING:
I TO MAINTAIN THIS DOCUMENT IN CONFIDENCE
II NOT TO REPRODUCE OR COPY IT
III NOT TO REVEAL OR PUBLISH IT IN WHOLE OR PART
IV ALL RIGHTS RESERVED

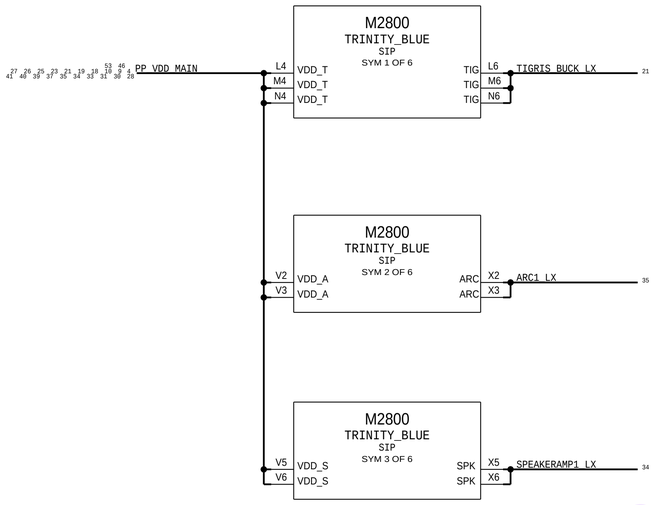


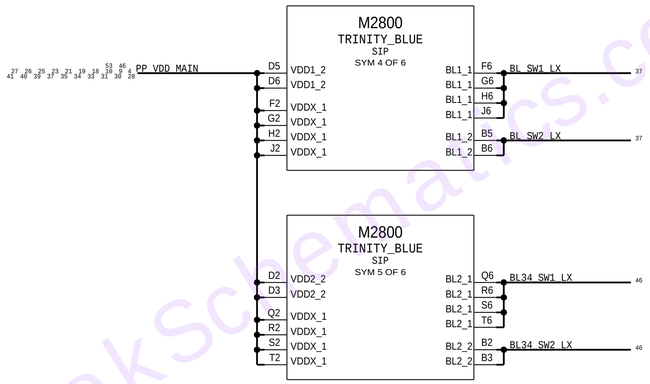


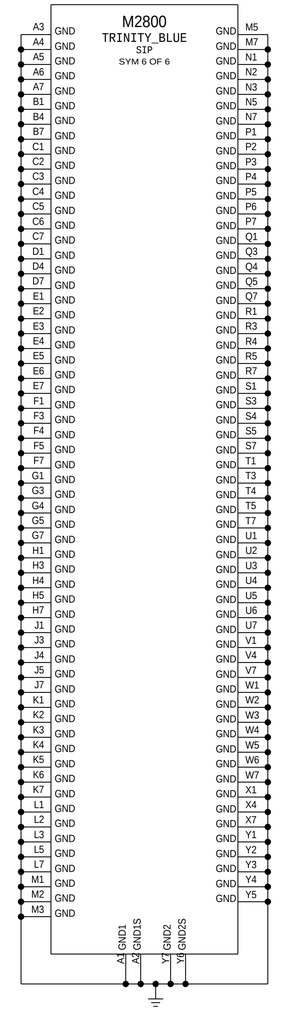


NotebookSchematics.com

SYNC_MASTER=sync SYNC_DATE=05/17/2016

PAGE TITLE

# TRINITY:FF SPECIFIC

Apple Inc.

DRAWING NUMBER 051-00482 | SIZE D

REVISION 8.0.0

BRANCH

PAGE 28 OF 53

SHEET 28 OF 81

NOTICE OF PROPRIETARY PROPERTY:

THE INFORMATION CONTAINED HEREIN IS THE PROPRIETARY PROPERTY OF APPLE INC.
THE POSESSOR AGREES TO THE FOLLOWING:
I TO MAINTAIN THIS DOCUMENT IN CONFIDENCE
II NOT TO REPRODUCE OR COPY IT
III NOT TO REVEAL OR PUBLISH IT IN WHOLE OR PART
IV ALL RIGHTS RESERVED

## NEW HAMPSHIRE POWER

FL2901
33-OHM-25%-1500MA
0201
ROOM=FOREHEAD

PP1V8 → PP1V8_NH_TO_CONN

C2914 0.1UF 20% 6.3V X5R-CERM 01005 ROOM=FOREHEAD
C2902 220PF 5% 10V C0G-CERM 01005 ROOM=FOREHEAD

FL2902
33-OHM-25%-1500MA
0201
ROOM=FOREHEAD

PP1V2_NH_NV_DVDD → PP1V2_NH_DVDD_CONN

C2916 2.2UF 20% 6.3V X5R-CERM 0201-1 ROOM=FOREHEAD
C2915 0.1UF 20% 6.3V X5R-CERM 01005 ROOM=FOREHEAD
C2903 220PF 5% 10V C0G-CERM 01005 ROOM=FOREHEAD

FL2903
10-OHM-750MA
01005-1
ROOM=FOREHEAD

PP2V9_NH_AVDD → PP2V9_NH_AVDD_CONN

C2909 2.2UF 20% 6.3V X6R-CERM 0201-1 ROOM=FOREHEAD
C2901 0.1UF 20% 6.3V X5R-CERM 01005 ROOM=FOREHEAD
C2904 220PF 5% 10V C0G-CERM 01005 ROOM=FOREHEAD

## NEW HAMPSHIRE I/O

FL2907
150OHM-25%-200MA-0.7DCR
01005
ROOM=FOREHEAD

AP_TO_NH_CLK → AP_TO_NH_CLK_CONN

C2910 56PF 5% 25V NP0-C0G-CERM 01005 ROOM=FOREHEAD

FL2908
150OHM-25%-200MA-0.7DCR
01005
ROOM=FOREHEAD

AP_TO_NH_SHUTDOWN_L → AP_TO_NH_SHUTDOWN_CONN_L

C2911 220PF 5% 10V C0G-CERM 01005 ROOM=FOREHEAD

## CONVOY I/O

#25657495: Update FL2905 to 100ohm

R2905 100 5% 1/32W MF 01005 ROOM=FOREHEAD

PDM_ADARE_TO_CONVOY_CLK → PDM_ADARE_TO_CONVOY_CLK_CONN

C2905 56PF 5% 25V NP0-C0G-CERM 01005 ROOM=FOREHEAD

FL2906
150OHM-25%-200MA-0.7DCR
01005
ROOM=FOREHEAD

PDM_CONVOY_TO_ADARE_DATA → PDM_CONVOY_TO_ADARE_DATA_CONN

C2906 56PF 5% 25V NP0-C0G-CERM 01005 ROOM=FOREHEAD

## PROX/ALS I/O

#26170697: R2915 to 240ohm/C2921 to 220pF

R2915 240 1% 1/32W MF 01005 ROOM=FOREHEAD

PROX_BI_AP_AOP_INT_PWM_L → PROX_BI_AP_AOP_INT_PWM_L_CONN

C2921 220PF 5% 10V C0G-CERM 01005 ROOM=FOREHEAD

FL2911
150OHM-25%-200MA-0.7DCR
01005
ROOM=FOREHEAD

ALS_TO_AP_INT_L → ALS_TO_AP_INT_CONN_L

C2924 56PF 5% 25V NP0-C0G-CERM 01005 ROOM=FOREHEAD

## PROX, ALS, & CONVOY POWER

FL2913
150OHM-25%-200MA-0.7DCR
01005
ROOM=FOREHEAD

PP3V0_ALS_APS_CONVOY → PP3V0_ALS_CONVOY_CONN

C2917 2.2UF 20% 6.3V X5R-CERM 0201-1 ROOM=FOREHEAD
C2926 220PF 5% 10V C0G-CERM 01005 ROOM=FOREHEAD

FL2910
150OHM-25%-200MA-0.7DCR
01005
ROOM=FOREHEAD

PP3V0_TRISTAR_ANT_PROX → PP3V0_PROX_CONN

#24511567: Remove C2918

C2927 2.2UF 20% 6.3V X5R-CERM 0201-1 ROOM=FOREHEAD
C2908 220PF 5% 10V C0G-CERM 01005 ROOM=FOREHEAD

## SPEAKER2

SPEAKERAMP2_TO_SPEAKER_OUT_POS

C2932 220PF 5% 10V C0G-CERM 01005 ROOM=FOREHEAD NO_XNET_CONNECTION=1

C2935 220PF 5% 10V C0G-CERM 01005 ROOM=FOREHEAD NO_XNET_CONNECTION=1

SPEAKERAMP2_TO_SPEAKER_OUT_NEG

C2931 220PF 5% 10V C0G-CERM 01005 ROOM=FOREHEAD NO_XNET_CONNECTION=1

R2903 0.00 0% 1/32W MF 01005 ROOM=FOREHEAD

SPEAKER_TO_SPEAKERAMP2_VSENSE_P → SPEAKER_TO_SPEAKERAMP2_VSENSE_CONN_P

C2933 100PF 5% 35V NP0-C0G 01005 ROOM=FOREHEAD NO_XNET_CONNECTION=1

R2904 0.00 0% 1/32W MF 01005 ROOM=FOREHEAD

SPEAKER_TO_SPEAKERAMP2_VSENSE_N → SPEAKER_TO_SPEAKERAMP2_VSENSE_CONN_N

C2934 100PF 5% 35V NP0-C0G 01005 ROOM=FOREHEAD NO_XNET_CONNECTION=1

## MIC3

FL2914
150OHM-25%-200MA-0.7DCR
01005
ROOM=FOREHEAD

PP_CODEC_TO_FRONTMIC3_BIAS → PP_CODEC_TO_FRONTMIC3_BIAS_CONN

DZ2905 6.8V-100PF 01005 ROOM=FOREHEAD

FL2904
150OHM-25%-200MA-0.7DCR
01005
ROOM=FOREHEAD

FRONTMIC3_TO_CODEC_AIN4_N → FRONTMIC3_TO_CODEC_AIN4_CONN_N

DZ2906 6.8V-100PF 01005 ROOM=FOREHEAD NO_XNET_CONNECTION=1

FL2909
150OHM-25%-200MA-0.7DCR
01005
ROOM=FOREHEAD

FRONTMIC3_TO_CODEC_AIN4_P → FRONTMIC3_TO_CODEC_AIN4_CONN_P

DZ2907 6.8V-100PF 01005 ROOM=FOREHEAD NO_XNET_CONNECTION=1

NotebookSchematics.com

PAGE TITLE
B2B:FOREHEAD

Apple Inc.

DRAWING NUMBER 051-00482 SIZE D
REVISION 8.0.0
BRANCH
PAGE 29 OF 53
SHEET 29 OF 81

NOTICE OF PROPRIETARY PROPERTY:
THE INFORMATION CONTAINED HEREIN IS THE PROPRIETARY PROPERTY OF APPLE INC.
THE POSESSOR AGREES TO THE FOLLOWING:
I TO MAINTAIN THIS DOCUMENT IN CONFIDENCE
II NOT TO REPRODUCE OR COPY IT
III NOT TO REVEAL OR PUBLISH IT IN WHOLE OR PART
IV ALL RIGHTS RESERVED

# NEVADA POWER

NOTE: OUTPUT IMPDEANCE MUST BE >0.005-OHM

IN ORDER TO MEET CAP ESR REQUIREMENT PER LDO SPEC.
VENDOR ALSO RECOMMENDS CIN = COUT FOR STABILITY

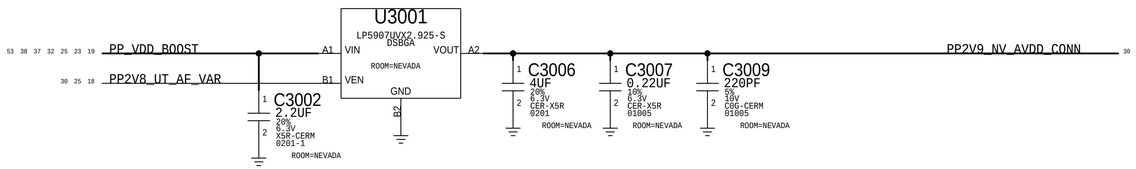


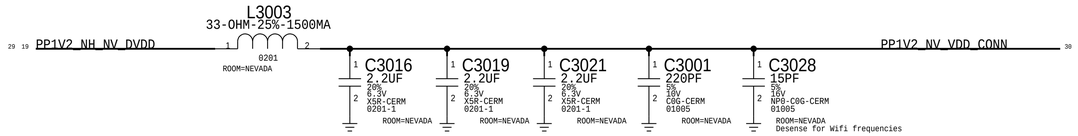


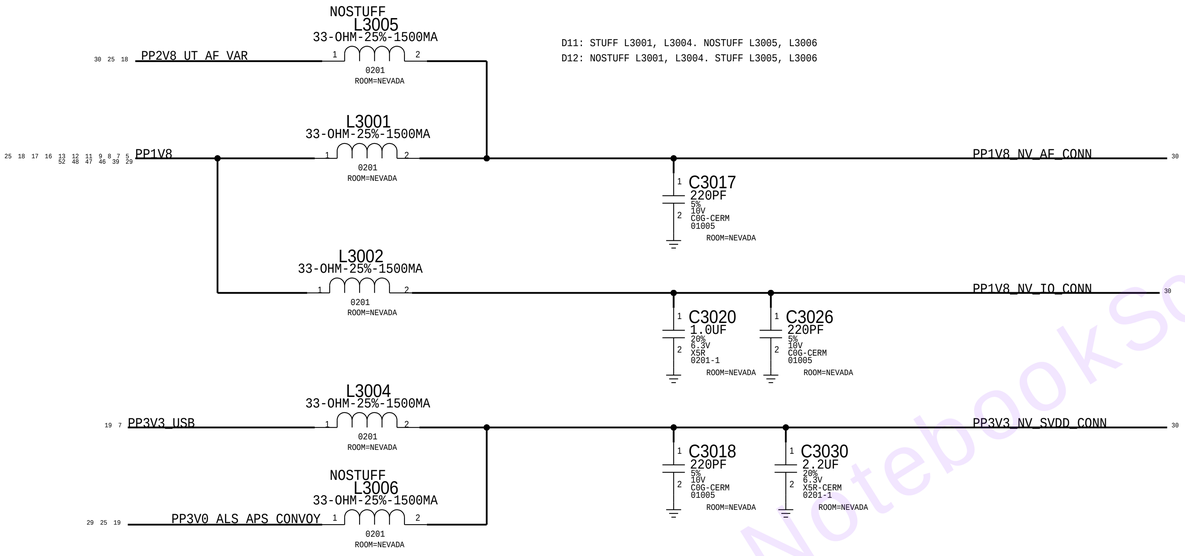


# LPDP FILTERS

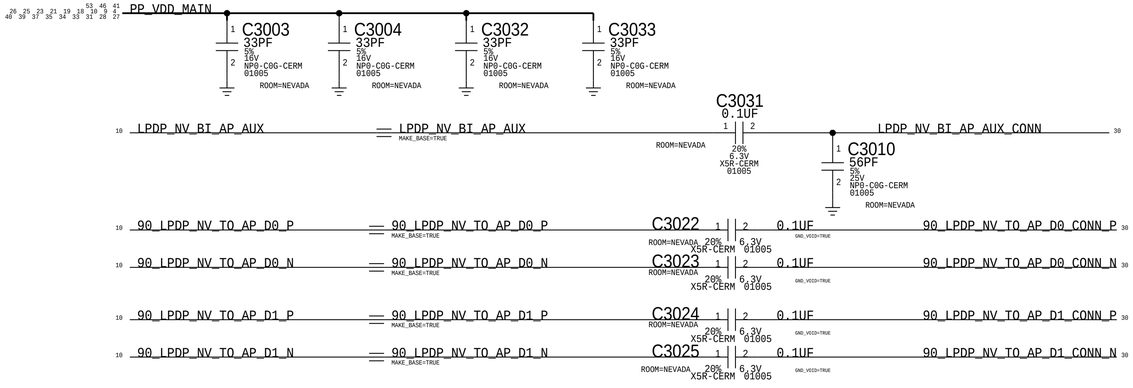


# NEVADA CONNECTOR

THIS ONE ---> 516S00152 RCPT (USED ON MLB)
516S00151 PLUG

THIS PAGE UNIQUE TO LARGE FORM FACTOR
OTHER FORM FACTOR SPECIFIC PAGES:
4 - Mechanical
46 - FF Specific

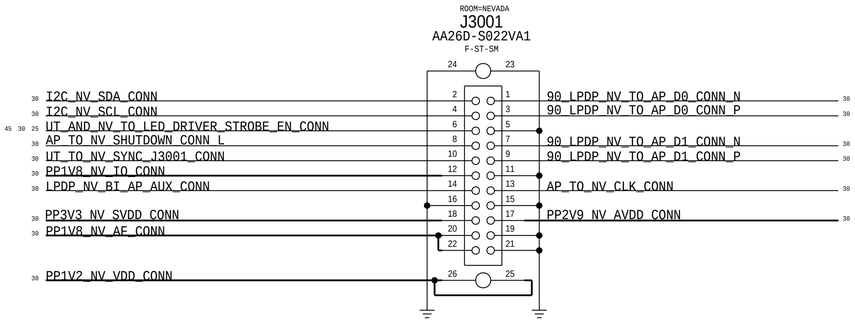


# GPIO FILTERS

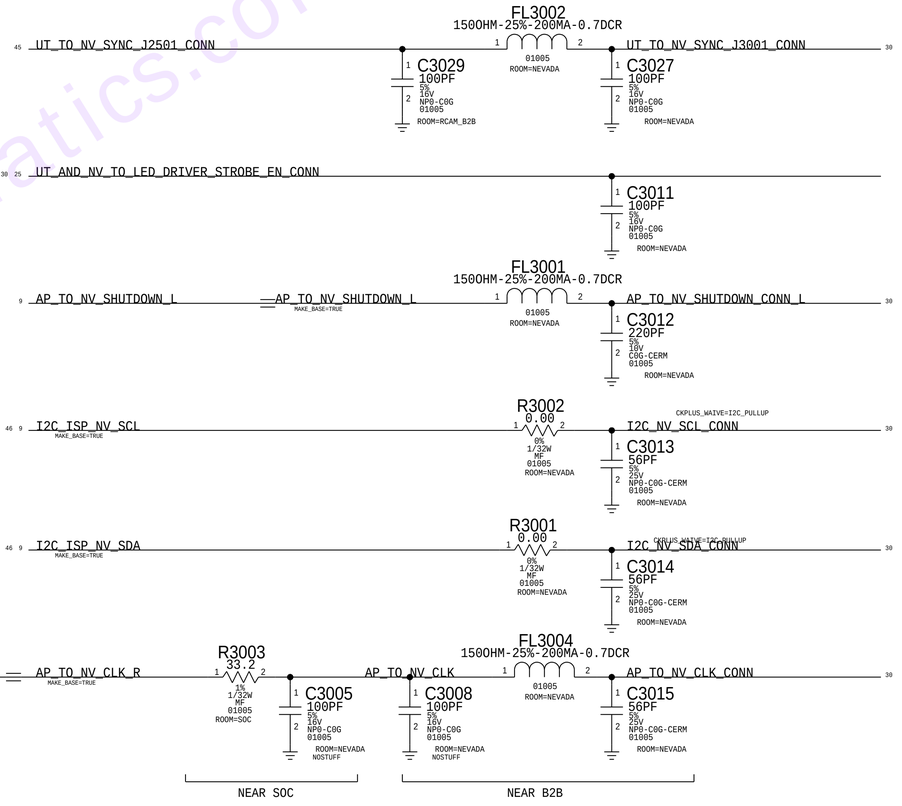


NotebookSchematics.com

PAGE TITLE

B2B:NEVADA

Apple Inc.

DRAWING NUMBER 051-00482
SIZE D
REVISION 8.0.0
BRANCH
PAGE 30 OF 53
SHEET 30 OF 81

NOTICE OF PROPRIETARY PROPERTY:

THE INFORMATION CONTAINED HEREIN IS THE PROPRIETARY PROPERTY OF APPLE INC.
THE POSESSOR AGREES TO THE FOLLOWING:
I TO MAINTAIN THIS DOCUMENT IN CONFIDENCE
II NOT TO REPRODUCE OR COPY IT
III NOT TO REVEAL OR PUBLISH IT IN WHOLE OR PART
IV ALL RIGHTS RESERVED

# CALTRA AUDIO CODEC (ANALOG INPUTS & OUTPUTS)

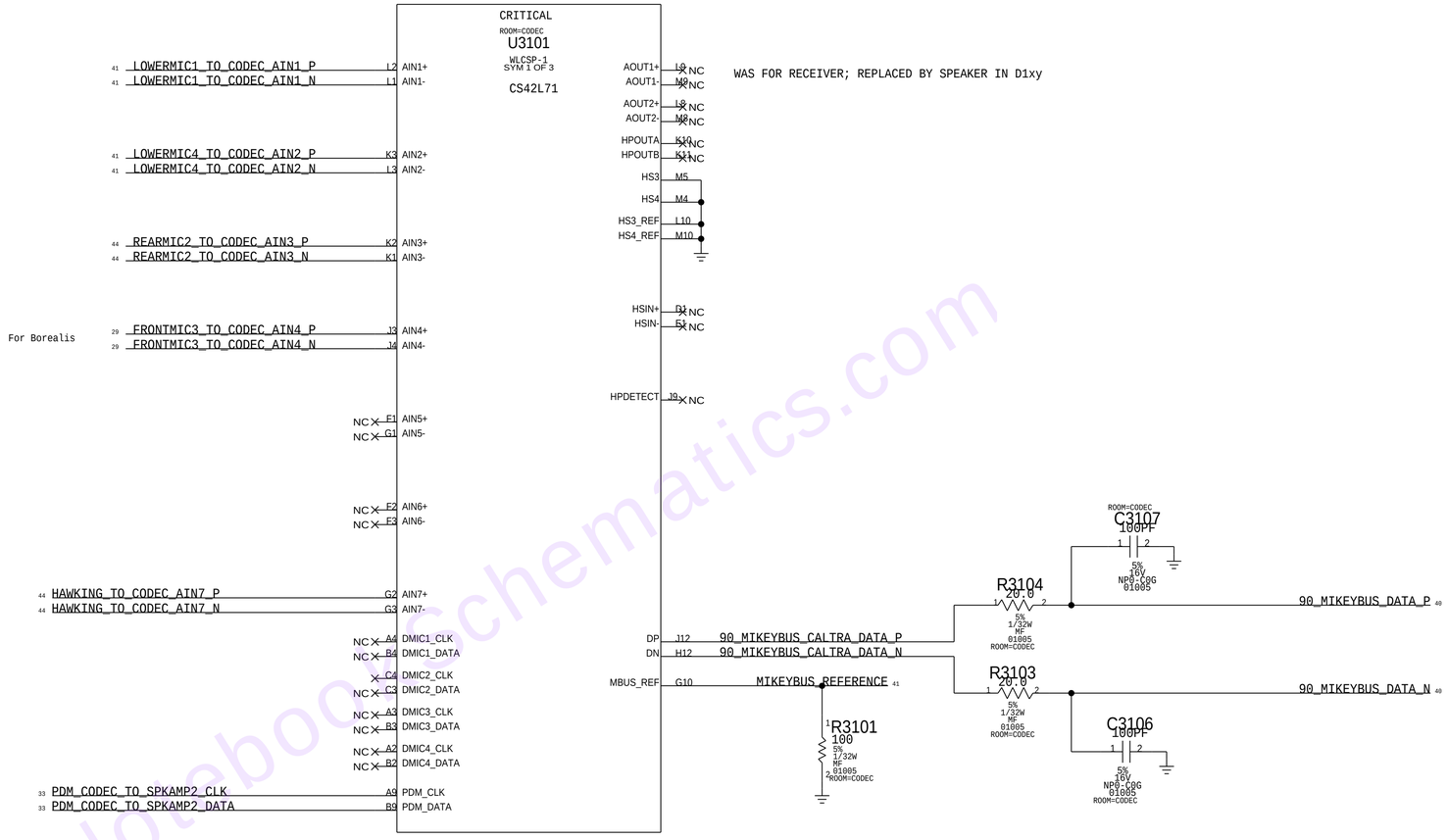


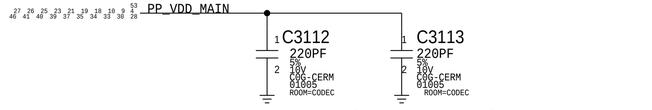


AC return path for Mikeybus which is referenced to GND and VDD_MAIN

Radar 21203307

Notebookschematics.com

PAGE TITLE
AUDIO:CALTRA CODEC (1/2)

Apple Inc.

DRAWING NUMBER 051-00482
SIZE D
REVISION 8.0.0
BRANCH
PAGE 31 OF 53
SHEET 31 OF 81

NOTICE OF PROPRIETARY PROPERTY:
THE INFORMATION CONTAINED HEREIN IS THE PROPRIETARY PROPERTY OF APPLE INC.
THE POSESSOR AGREES TO THE FOLLOWING:
I TO MAINTAIN THIS DOCUMENT IN CONFIDENCE
II NOT TO REPRODUCE OR COPY IT
III NOT TO REVEAL OR PUBLISH IT IN WHOLE OR PART
IV ALL RIGHTS RESERVED

# CALTRA AUDIO CODEC (POWER & I/O)

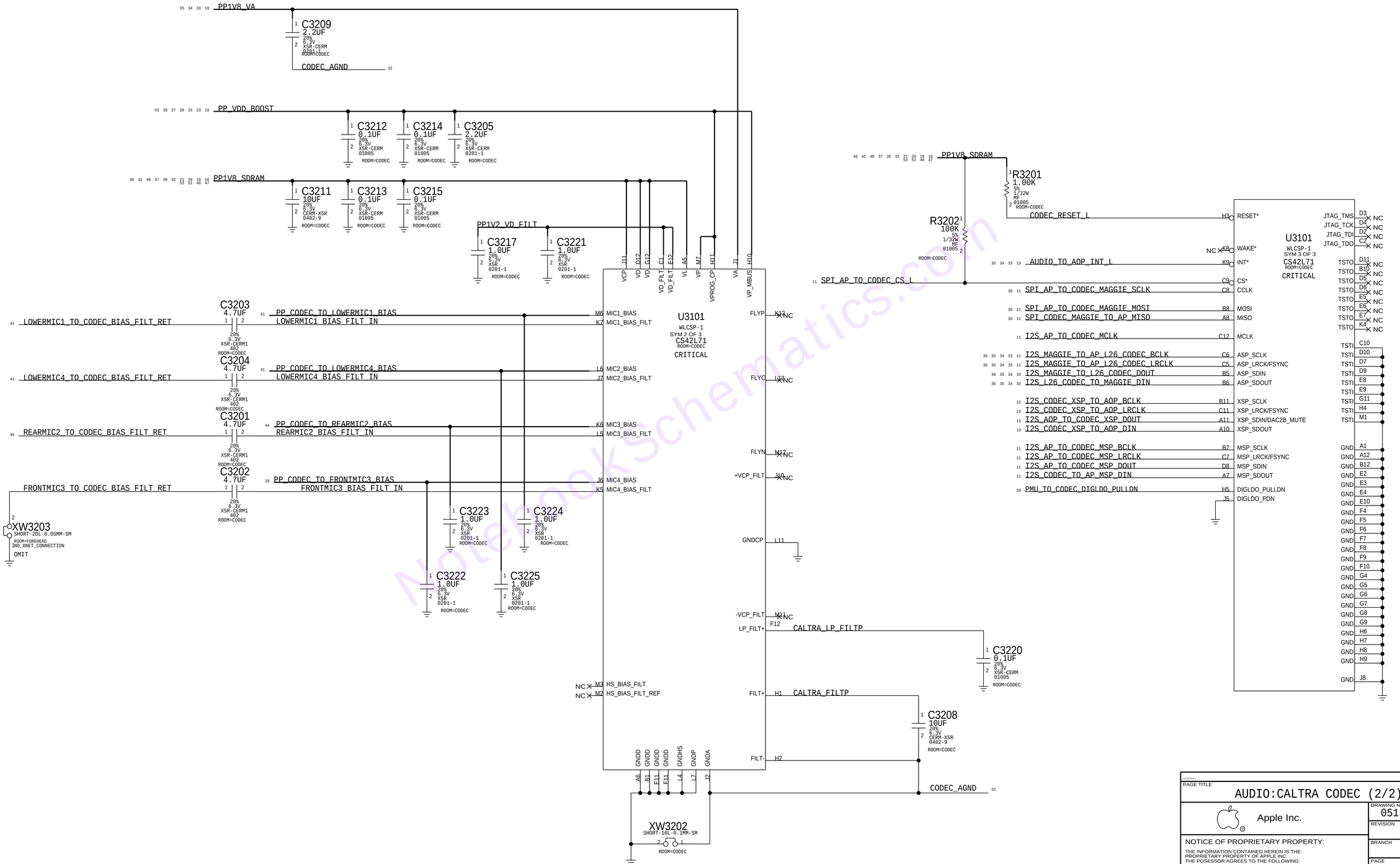


NotebookSchematics.com

PAGE TITLE

AUDIO:CALTRA CODEC (2/2)

Apple Inc.

DRAWING NUMBER 051-00482 SIZE D

REVISION 8.0.0

BRANCH

PAGE 32 OF 53

SHEET 32 OF 81

NOTICE OF PROPRIETARY PROPERTY:

THE INFORMATION CONTAINED HEREIN IS THE PROPRIETARY PROPERTY OF APPLE INC.
THE POSESSOR AGREES TO THE FOLLOWING:
I TO MAINTAIN THIS DOCUMENT IN CONFIDENCE
II NOT TO REPRODUCE OR COPY IT
III NOT TO REVEAL OR PUBLISH IT IN WHOLE OR PART
IV ALL RIGHTS RESERVED

# SPEAKER AMPLIFIER 2 (North)

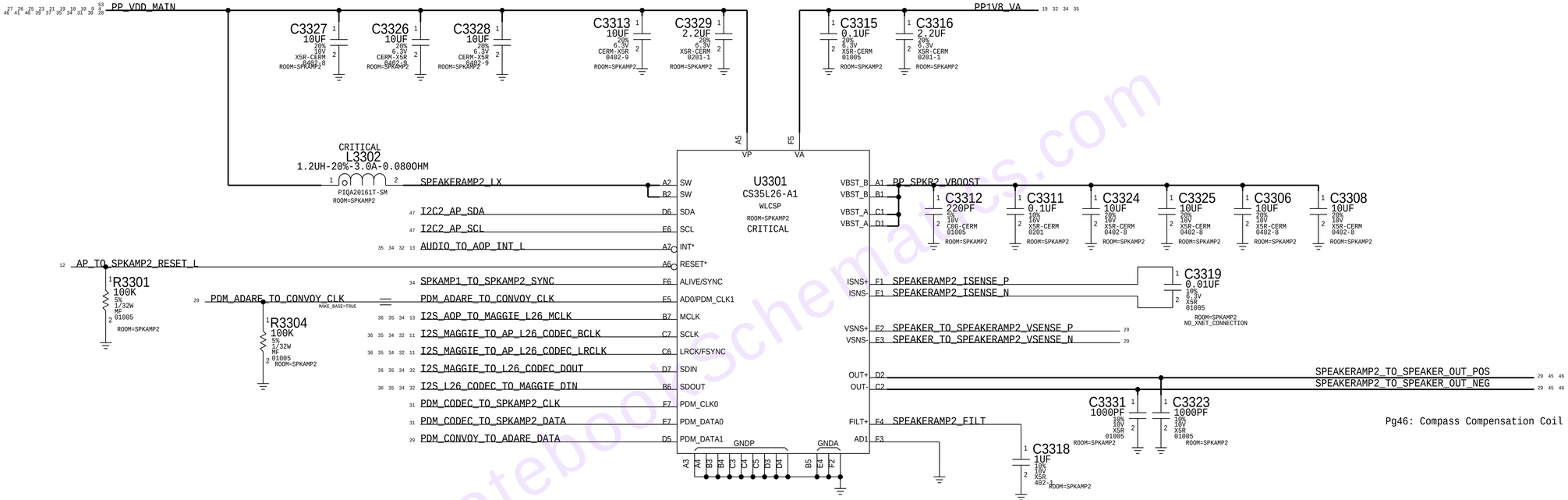


Pg46: Compass Compensation Coil

NotebookSchematics.com

PAGE TITLE
AUDIO:SPEAKER AMP 2

Apple Inc.

DRAWING NUMBER 051-00482 SIZE D
REVISION 8.0.0
BRANCH
PAGE 33 OF 53
SHEET 33 OF 81

NOTICE OF PROPRIETARY PROPERTY:
THE INFORMATION CONTAINED HEREIN IS THE PROPRIETARY PROPERTY OF APPLE INC.
THE POSESSOR AGREES TO THE FOLLOWING:
I TO MAINTAIN THIS DOCUMENT IN CONFIDENCE
II NOT TO REPRODUCE OR COPY IT
III NOT TO REVEAL OR PUBLISH IT IN WHOLE OR PART
IV ALL RIGHTS RESERVED

# SPEAKER AMPLIFIER 1 (South)

#25112685,Remove C3414

PP_VDD_MAIN

C3407 10UF 20% 10V X5R-CERM 0402-8 ROOM=SPKAMP1

C3405 10UF 20% 6.3V CERM-X5R 0402-9 ROOM=SPKAMP1

C3424 10UF 20% 6.3V CERM-X5R 0402-9 ROOM=SPKAMP1

PP1V8_VA

C3425 0.1UF 20% 6.3V X5R-CERM 01005 ROOM=SPKAMP1

C3426 2.2UF 20% 6.3V X5R-CERM 0201-1 ROOM=SPKAMP1

U3402
CS35L26-A1
WLCSP
ROOM=SPKAMP1
CRITICAL

| | | | |
|---|---|---|---|
| TO TRINITY | SPEAKERAMP1_LX | A2 | SW |
| | | B2 | SW |
| | I2C_AOP_SDA | D6 | SDA |
| | I2C_AOP_SCL | E6 | SCL |
| | AUDIO_TO_AOP_INT_L | A7 | INT* |
| PULLED LOW ON PG 35 | AOP_TO_SPKAMP1_ARC_RESET_L | A6 | RESET* |
| | SPKAMP1_TO_SPKAMP2_SYNC | F6 | ALIVE/SYNC |
| MAKE_BASE=TRUE | GND | E5 | AD0/PDM_CLK1 |
| | I2S_AOP_TO_MAGGIE_L26_MCLK | B7 | MCLK |
| | I2S_MAGGIE_TO_AP_L26_CODEC_BCLK | C7 | SCLK |
| | I2S_MAGGIE_TO_AP_L26_CODEC_LRCLK | C6 | LRCK/FSYNC |
| | I2S_MAGGIE_TO_L26_CODEC_DOUT | D7 | SDIN |
| | I2S_L26_CODEC_TO_MAGGIE_DIN | B6 | SDOUT |
| NC | | F7 | PDM_CLK0 |
| NC | | E7 | PDM_DATA0 |
| | | D5 | PDM_DATA1 |
| | | A3 | GNDP |
| | | A4,B3,B4,C3,C4,C5,D3,D4 | GNDA |
| | | B5,E4,F2 | |
| | | VP | A5 |
| | | VA | F5 |
| | | VBST_B | A1 |
| | | VBST_B | B1 |
| | | VBST_A | C1 |
| | | VBST_A | D1 |
| | | ISNS+ | F1 |
| | | ISNS- | E1 |
| | | VSNS+ | E2 |
| | | VSNS- | E3 |
| | | OUT+ | D2 |
| | | OUT- | C2 |
| | | FILT+ | F4 |
| | | AD1 | F3 |

PP_SPKR1_VBOOST

C3427 220PF 5% 10V C0G-CERM 01005 ROOM=SPKAMP1

C3428 0.1UF 10% 10V X5R-CERM 0201 ROOM=SPKAMP1

C3403 10UF 20% 10V X5R-CERM 0402-8 ROOM=SPKAMP1

C3404 10UF 20% 10V X5R-CERM 0402-8 ROOM=SPKAMP1

C3431 10UF 20% 10V X5R-CERM 0402-8 ROOM=SPKAMP1

C3432 10UF 20% 10V X5R-CERM 0402-8 ROOM=SPKAMP1

SPEAKERAMP1_ISENSE_P

SPEAKERAMP1_ISENSE_N

C3430 0.01UF 10% 6.3V X5R 01005 ROOM=SPKAMP1 NO_XNET_CONNECTION

SPEAKER_TO_SPEAKERAMP1_VSENSE_P 41

SPEAKER_TO_SPEAKERAMP1_VSENSE_N 41

SPEAKERAMP1_TO_SPEAKER_OUT_POS 41

SPEAKERAMP1_TO_SPEAKER_OUT_NEG 41

SPEAKERAMP1_FILT

C3429 2.2UF 20% 6.3V X5R-CERM 0201-1 ROOM=SPKAMP1

C3422 1000PF 10% 10V X5R 01005 ROOM=SPKAMP1

C3434 1000PF 10% 10V X5R 01005 ROOM=SPKAMP1

Notebookschematics.com

PAGE TITLE
AUDIO:SPEAKER AMP 1

Apple Inc.

DRAWING NUMBER 051-00482
SIZE D
REVISION 8.0.0
BRANCH
PAGE 34 OF 53
SHEET 34 OF 81

NOTICE OF PROPRIETARY PROPERTY:
THE INFORMATION CONTAINED HEREIN IS THE PROPRIETARY PROPERTY OF APPLE INC.
THE POSESSOR AGREES TO THE FOLLOWING:
I TO MAINTAIN THIS DOCUMENT IN CONFIDENCE
II NOT TO REPRODUCE OR COPY IT
III NOT TO REVEAL OR PUBLISH IT IN WHOLE OR PART
IV ALL RIGHTS RESERVED

# ARC DRIVER

#25742582,Add back C3531 for D10x at Pg46
0201 C3525 is at Pg46

PP_VDD_MAIN
C3530 10UF 20% 10V X5R-CERM 0402-8 ROOM=ARC1
C3532 10UF 20% 6.3V CERM-X5R 0402-9 ROOM=ARC1
C3527 0.1UF 20% 6.3V X5R-CERM 01005 ROOM=ARC1
C3534 2.2UF 20% 6.3V X5R-CERM 0201-1 ROOM=ARC1
PP1V8_VA

U3502
CS35L26-A1
WLCSP
ROOM=SPKAMP2
CRITICAL

TO TRINITY
ARC1_LX
I2C_AOP_SDA
I2C_AOP_SCL
AUDIO_TO_AOP_INT_L
AOP_TO_SPKAMP1_ARC_RESET_L
R3508 100K 5% 1/32W MF 01005 ROOM=ARC1
NC FROM HOMER PER #25452686
PP1V8_VA
I2S_AOP_TO_MAGGIE_L26_MCLK
I2S_MAGGIE_TO_AP_L26_CODEC_BCLK
I2S_MAGGIE_TO_AP_L26_CODEC_LRCLK
I2S_MAGGIE_TO_L26_CODEC_DOUT
I2S_L26_CODEC_TO_MAGGIE_DIN
NOSTUFF C3501 10PF 5% 10V CERM 01005 ROOM=ARC1

PP_ARC1_VBOOST
VOLTAGE=8.0V
C3526 220PF 5% 10V C0G-CERM 01005 ROOM=ARC1
C3535 0.1UF 10% 10V X5R-CERM 0201 ROOM=ARC1
C3537 10UF 20% 10V X5R-CERM 0402-8 ROOM=ARC1
C3524 10UF 20% 10V X5R-CERM 0402-8 ROOM=ARC1
C3538 10UF 20% 10V X5R-CERM 0402-8 ROOM=ARC1
C3539 10UF 20% 10V X5R-CERM 0402-8 ROOM=ARC1

ARC1_ISENSE_P
ARC1_ISENSE_N
C3528 0.01UF 10% 6.3V X5R 01005 ROOM=ARC1 NO_XNET_CONNECTION
SOLENOID1_TO_ARC1_VSENSE_POS
SOLENOID1_TO_ARC1_VSENSE_NEG
VOLTAGE=8.0V
ARC1_TO_SOLENOID1_OUT_POS
ARC1_TO_SOLENOID1_OUT_NEG
C3529 1000PF 10% 10V X5R 01005 ROOM=ARC1
C3542 1000PF 10% 10V X5R 01005 ROOM=ARC1
ARC1_FILT
C3536 2.2UF 20% 6.3V X5R-CERM 0201-1 ROOM=ARC1

GNDP
GNDA

Notebook Schematics.com

PAGE TITLE: ARC:DRIVER

Apple Inc.

DRAWING NUMBER: 051-00482
SIZE: D
REVISION: 8.0.0
BRANCH:
PAGE: 35 OF 53
SHEET: 35 OF 81

NOTICE OF PROPRIETARY PROPERTY:
THE INFORMATION CONTAINED HEREIN IS THE PROPRIETARY PROPERTY OF APPLE INC.
THE POSESSOR AGREES TO THE FOLLOWING:
I TO MAINTAIN THIS DOCUMENT IN CONFIDENCE
II NOT TO REPRODUCE OR COPY IT
III NOT TO REVEAL OR PUBLISH IT IN WHOLE OR PART
IV ALL RIGHTS RESERVED

## MAGGIE LDO

APN: 353S00842

U3603
LD39130S-1.2V/AP

PP1V8_SDRAM (46 41 40 37 36 32 21 53 20 52 18 48 16 47)
A1 IN
B1 EN
CSP
OUT A2
GND
B2

PP1V2_MAGGIE
C3605 4UF 20% 6.3V CER-X5R 0201 ROOM=ARC_CTRL
C3601 0.1UF 20% 6.3V X5R-CERM 01005 ROOM=ARC_CTRL
R3601 100 5% 1/32W MF 01005 ROOM=ARC_CTRL
PP1V2_MAGGIE_PLL
C3602 0.1UF 20% 6.3V X5R-CERM 01005 ROOM=ARC_CTRL

## MAGGIE

APN: 336S00020

VPP_2V5 must be > 1.71V for SPI Slave programming

PP1V8_MAGGIE_IMU (36 24 18)
C3604 2.2UF 20% 6.3V X5R-CERM 0201-1 ROOM=ARC_CTRL
C3606 0.1UF 20% 6.3V X5R-CERM 01005 ROOM=ARC_CTRL

ICE5LP4K-SWG36I
U3602
WLCSP

VCCIO_0 A4
VCCIO_2 C4
VCCPLL B3
VPP_2V5 D4
VCC A5
SPI_VCCIO1 C3

NC A2 IRLED
NC C6 RGB0
NC B6 RGB1
NC A6 RGB2
36 MAGGIE_TO_HOMER_WAKE B5 IOT_46B_G0
SPI_MAGGIE_TO_HOMER_POS_SCLK F6 IOB_2A
E6 IOB_3B_G6
NC D6 IOB_4A
SPI_HOMER_TO_MAGGIE_POS_MISO D5 IOB_5B
13 AOP_TO_MAGGIE_EN F5 IOB_6A
13 MAGGIE_TO_AOP_INT E5 IOB_7B

BANK 0
BANK 1
BANK 2

IOB_10A B4 NC
IOB_11B_G5 F4 I2S_MAGGIE_TO_AP_L26_CODEC_BCLK_R
IOB_12A_G4_CDONE E4 MAGGIE_TO_AP_CDONE (12)
IOB_16A F3 UART_AOP_TO_MAGGIE_TXD (13)
IOB_20A E3 I2S_MAGGIE_TO_AP_DIN (11)
IOB_25B_G3 C2 I2S_AOP_TO_MAGGIE_L26_MCLK (13 33 34 35)
IOB_26A B1 I2S_MAGGIE_TO_L26_CODEC_DOUT (32 33 34 35) MAGGIE <-> ARC, SPKRS, CODEC (SDOUT)
IOB_27B D2 I2S_L26_CODEC_TO_MAGGIE_DIN (32 33 34 35) MAGGIE <-> ARC, SPKRS, CODEC (SDIN)
IOB_29B E2 I2S_AP_TO_MAGGIE_DOUT (11) MAGGIE <-> AP (SDOUT)
IOB_30A C1
IOB_31B B2 I2S_MAGGIE_TO_AP_L26_CODEC_LRCLK (11 32 33 34 40) MAGGIE DRIVES TO ARC, SPKRS, AP, CODEC
IOB_32A_SPI_SO F2 SPI_CODEC_MAGGIE_TO_AP_MISO (11 32)
IOB_33B_SPI_SI D1 SPI_AP_TO_CODEC_MAGGIE_MOSI (11 32)
IOB_34A_SPI_SCK E1 SPI_AP_TO_CODEC_MAGGIE_SCLK (11 32)
IOB_35B_SPI_CSN F1 SPI_AP_TO_MAGGIE_CS_L (9)
CRESET_B D3 AP_TO_MAGGIE_CRESETB_L (12)

GND_LED A1
GNDS C5
GNDS A3
ROOM=ARC_CTRL
CRITICAL

R3604 33.2 1% 1/32W MF 01005 ROOM=ARC_CTRL
MAGGIE DRIVES TO ARC, SPKRS, AP, CODEC
I2S_MAGGIE_TO_AP_L26_CODEC_BCLK (11 32 33 34 35)
MAGGIE <-> AP (SDIN)

PP1V8_MAGGIE_IMU (18 24 36)
R3605 10K 5% 1/32W MF 01005
R3602 10K 5% 1/32W MF 01005

R3603 511K 1% 1/32W MF 01005

## HOMER STM32L0 MICRO

STM32L03 APN: 337S00231

PP1V8_SDRAM (46 41 40 37 36 32 21 53 20 52 18 48 16 47)
C3603 2.2UF 20% 6.3V X5R-CERM 0201-1 ROOM=HOMER

PP3601 P2MM-NSM ROOM=HOMER
PP3602 P2MM-NSM ROOM=HOMER

U3601
STM32L031E6Y6D
ROOM=HOMER
WLCSP

D1 VDD
C4 VDDA
VSSA E1

NC E5 PA0_CLK_IN
NC B4 PA1
D4 PA2
E4 PA3
36 MAGGIE_TO_HOMER_WAKE B3 PA4
NC D3 PA5
E3 PA6
NC C3 PA7
13 HOMER_TO_AOP_WAKE_INT C1 PA8
47 41 I2C_HOMER_SCL B1 PA9
47 41 I2C_HOMER_SDA C2 PA10
13 SWD_AP_BI_HOMER_SWDIO A1 PA13
53 17 13 SWD_AP_TO_MANY_SWCLK A2 PA14

PB0 E2
PB1 D2 SPI_MAGGIE_TO_HOMER_POS_MOSI
PB3 B2
PB6 A3
PB7 A4 NC
PC14_OSC32_IN B5 NC
PC15_OSC32_OUT C5 NC
RST* D5 PMU_TO_HOMER_RESET_L (20)
BOOT0 A5 AP_BI_HOMER_BOOTLOADER_ALIVE (12)

NOTE: RESET HAS INTERNAL 65K PULLUP

R3607 100 5% 1/32W MF 01005 ROOM=HOMER
AP_BI_HOMER_BOOTLOADER_ALIVE_R

R3611 27K 5% 1/32W MF 01005 ROOM=HOMER

C3607 0.1UF 20% 6.3V X5R-CERM 01005 ROOM=HOMER

#24543115: Scrub Value

Notebookschematics.com

PAGE TITLE
ARC:MAGGIE

Apple Inc.

DRAWING NUMBER 051-00482
SIZE D
REVISION 8.0.0
BRANCH
PAGE 36 OF 53
SHEET 36 OF 81

NOTICE OF PROPRIETARY PROPERTY:
THE INFORMATION CONTAINED HEREIN IS THE PROPRIETARY PROPERTY OF APPLE INC.
THE POSESSOR AGREES TO THE FOLLOWING:
I TO MAINTAIN THIS DOCUMENT IN CONFIDENCE
II NOT TO REPRODUCE OR COPY IT
III NOT TO REVEAL OR PUBLISH IT IN WHOLE OR PART
IV ALL RIGHTS RESERVED

# DISPLAY & TOUCH - POWER SUPPLIES

## CHESTNUT DISPLAY PMU

APN:338S1172

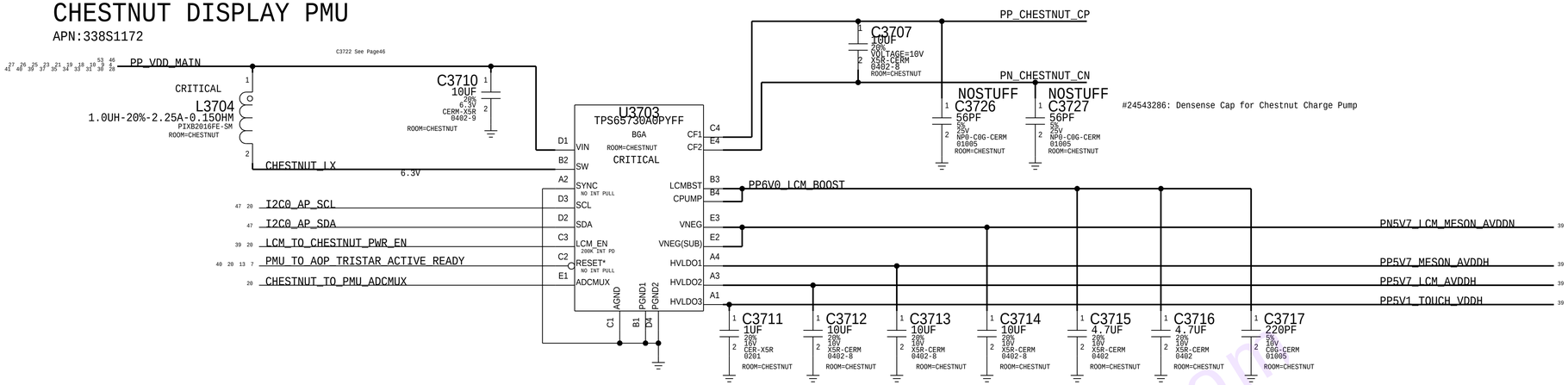


#26634069:D1x, C3715/C3716 to 138S0719 0402 4.7uF

## LED BACKLIGHT DRIVER - 6LED

APN:353s00640

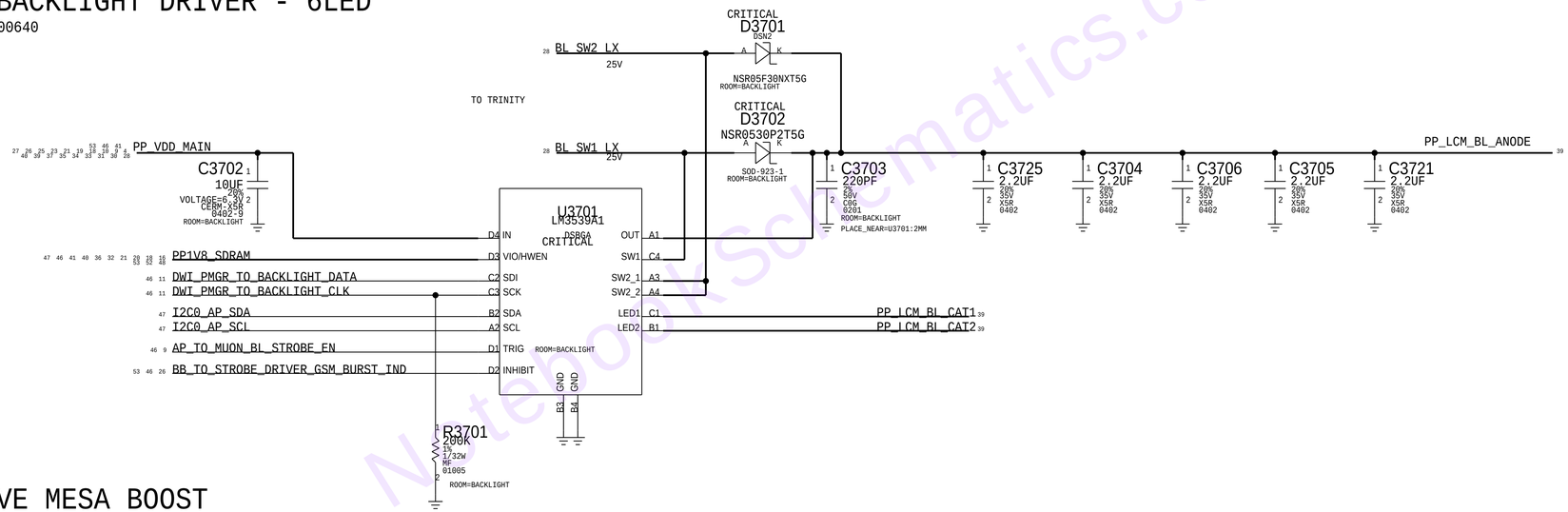


## MOJAVE MESA BOOST

APN:353S00671

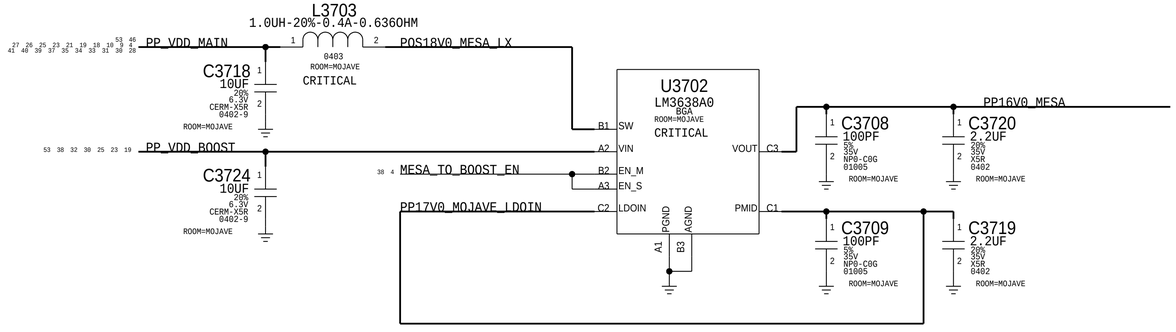


PAGE TITLE

DISPLAY & MESA:POWER

Apple Inc.

DRAWING NUMBER 051-00482 | SIZE D

REVISION 8.0.0

BRANCH

PAGE 37 OF 53

SHEET 37 OF 81

NOTICE OF PROPRIETARY PROPERTY:

THE INFORMATION CONTAINED HEREIN IS THE PROPRIETARY PROPERTY OF APPLE INC.
THE POSESSOR AGREES TO THE FOLLOWING:
I TO MAINTAIN THIS DOCUMENT IN CONFIDENCE
II NOT TO REPRODUCE OR COPY IT
III NOT TO REVEAL OR PUBLISH IT IN WHOLE OR PART
IV ALL RIGHTS RESERVED

NotebookSchematics.com

# MESA POWER

FL3803
80-OHM-25%-0.52A-0.17OHM
0201
ROOM=MAMBA_MESA

19 PP3V0_MESA → PP3V0_MESA_CONN 38

- C3813 2.2UF 20% 6.3V X5R-CERM 0201-1 ROOM=MAMBA_MESA
- C3815 2.2UF 20% 6.3V X5R-CERM 0201-1 ROOM=MAMBA_MESA
- C3821 2.2UF 20% 6.3V X5R-CERM 0201-1 ROOM=MAMBA_MESA
- C3822 0.1UF 20% 6.3V X5R-CERM 01005 ROOM=MAMBA_MESA
- C3804 220PF 5% 10V C0G-CERM 01005 ROOM=MAMBA_MESA

FL3801
1500HM-25%-200MA-0.7DCR
01005
ROOM=MAMBA_MESA

48 19 PP1V8_MESA → PP1V8_MESA_CONN 38

- C3814 2.2UF 20% 6.3V X5R-CERM 0201-1 ROOM=MAMBA_MESA
- C3802 220PF 5% 10V C0G-CERM 01005 ROOM=MAMBA_MESA

FL3802
1500HM-25%-200MA-0.7DCR
01005
ROOM=MAMBA_MESA

37 4 PP16V0_MESA → PP16V0_MESA_CONN 38

- C3803 100PF 5% 16V NP0-C0G 01005 ROOM=MAMBA_MESA

# MESA DIGITAL I/O

FL3807
150OHM-25%-200MA-0.7DCR
01005
ROOM=MAMBA_MESA

11 SPI_AP_TO_MESA_MOSI → SPI_AP_TO_MESA_MOSI_CONN 38

- R3807 511K 1% 1/32W MF 01005 ROOM=MAMBA_MESA
- C3816 56PF 5% 25V NP0-C0G-CERM 01005 ROOM=MAMBA_MESA

R3809
0.00
0% 1/32W MF 01005
ROOM=MAMBA_MESA

11 SPI_AP_TO_MESA_SCLK → SPI_AP_TO_MESA_SCLK_CONN 38

- R3808 511K 1% 1/32W MF 01005 ROOM=MAMBA_MESA
- C3817 56PF 5% 25V NP0-C0G-CERM 01005 ROOM=MAMBA_MESA

R3811
33.2
1% 1/32W MF 01005
ROOM=MAMBA_MESA

11 SPI_MESA_TO_AP_MISO → SPI_MESA_TO_AP_MISO_CONN 38

- C3818 56PF 5% 25V NP0-C0G-CERM 01005 ROOM=MAMBA_MESA

R3801
681
1% 1/32W MF 01005
ROOM=MAMBA_MESA

11 MESA_TO_AP_INT → MESA_TO_AP_INT_CONN 38

- C3819 100PF 5% 16V NP0-C0G 01005 ROOM=MAMBA_MESA

R3802
681
1% 1/32W MF 01005
ROOM=MAMBA_MESA

37 4 MESA_TO_BOOST_EN → MESA_TO_BOOST_EN_CONN 38

- C3801 100PF 5% 16V NP0-C0G 01005 ROOM=MAMBA_MESA

FL3811
150OHM-25%-200MA-0.7DCR
01005

13 AOP_TO_MESA_BLANKING_EN → AOP_TO_MESA_BLANKING_EN_CONN 38

- C3825 56PF 5% 16V NP0-C0G-CERM 01005 ROOM=MAMBA_MESA

# MAMBA AND MESA CONNECTOR

MLB: 516S00141 (RCPT)
FLEX: 516S00142 (PLUG)

CRITICAL
J3801
BB35C-RA24-3A
F-ST-SM

Matches flex_x452_acf, schematic revision 1.5.0 pinout

| | | | |
|---|---|---|---|
| 38 PP3V0_MESA_CONN | 2 | 1 | PP1V8_MESA_CONN 38 |
| | 4 | 3 | |
| 38 PP16V0_MESA_CONN | 6 | 5 | MESA_TO_AOP_FDINT_CONN 38 |
| | 8 | 7 | I2C_MESA_TURTLE_SDA_CONN 48 |
| GUARD | 10 | 9 | I2C_MESA_TURTLE_SCL_CONN 48 |
| 38 MAMBA_TO_LCM_MDRIVE_CONN_MESA | 12 | 11 | MESA_TO_BOOST_EN_CONN 38 |
| | 14 | 13 | MESA_TO_AP_INT_CONN 38 |
| AP_TO_TOUCH_MAMBA_RESET_CONN_L 45 39 | 16 | 15 | SPI_AP_TO_MESA_SCLK_CONN 38 |
| TP_MAMBA_HINT_L | 18 | 17 | SPI_AP_TO_MESA_MOSI_CONN 38 |
| I2C_TOUCH_BI_MAMBA_SDA 47 | 20 | 19 | AOP_TO_MESA_BLANKING_EN_CONN 38 |
| I2C_TOUCH_TO_MAMBA_SCL 47 | 22 | 21 | SPI_MESA_TO_AP_MISO_CONN 38 |
| 38 PP1V8_TOUCH_TO_MAMBA_CONN | 24 | 23 | PP2V75_MAMBA_CONN 38 |
| | 28 | 27 | |
| | | 30 | |

ROOM=MAMBA_MESA

45 LCM_TO_MAMBA_MSYNC_CONN

- C3807 56PF 5% 25V NP0-C0G-CERM 01005 ROOM=MAMBA_MESA

P2MM-NSM SM
PP3801

# MAMBA POWER

NOTE: OUTPUT IMPDEANCE MUST BE >0.005-OHM
IN ORDER TO MEET CAP ESR REQUIREMENT PER LDO SPEC.
VENDOR ALSO RECOMMENDS CIN 2 COUT FOR STABILITY

TI:353S00576
ST:353S00932

53 37 32 30 25 23 19 PP_VDD_BOOST

- C3828 2.2UF 20% 6.3V X5R-CERM 0201-1 ROOM=MAMBA_MESA

XW3801
SHORT-20L-0.05MM-SM
ROOM=PMU
OMIT

47 46 39 38 18 PP1V8_TOUCH → MAMBA_LDO_EN

U3801
LP5907SNX-2.75
X2SON
VIN → VOUT 1
EN 3
GND EPAD 2 5
ROOM=MAMBA_MESA

- C3823 10UF 20% 10V X5R-CERM 0402-8 ROOM=MAMBA_MESA
- C3812 220PF 5% 10V C0G-CERM 01005 ROOM=MAMBA_MESA

PP2V75_MAMBA_CONN 38

R3805
0.00
0% 1/32W MF 01005
ROOM=MAMBA_MESA

47 46 39 38 18 PP1V8_TOUCH → PP1V8_TOUCH_TO_MAMBA_CONN 38

- C3824 2.2UF 20% 6.3V X5R-CERM 0201-1 ROOM=MAMBA_MESA
- C3811 220PF 5% 10V C0G-CERM 01005 ROOM=MAMBA_MESA

# MAMBA DIGITAL I/O

FL3804
150OHM-25%-200MA-0.7DCR
01005
ROOM=MAMBA_MESA

45 MAMBA_TO_LCM_MDRIVE → MAMBA_TO_LCM_MDRIVE_CONN_MESA 38

- C3805 56PF 5% 25V NP0-C0G-CERM 01005 ROOM=MAMBA_MESA
- NOSTUFF C3806 56PF 5% 25V NP0-C0G-CERM 01005 ROOM=MAMBA_MESA

FL3806
150OHM-25%-200MA-0.7DCR
01005
ROOM=MAMBA_MESA

13 MESA_TO_AOP_FDINT → MESA_TO_AOP_FDINT_CONN 38

- C3826 100PF 5% 16V NP0-C0G 01005 ROOM=MAMBA_MESA

#24543342: stuff 100pF

NotebookSchematics.com

PAGE TITLE
B2B:ORB & MESA

Apple Inc.

DRAWING NUMBER 051-00482
SIZE D
REVISION 8.0.0
BRANCH
PAGE 38 OF 53
SHEET 38 OF 81

NOTICE OF PROPRIETARY PROPERTY:
THE INFORMATION CONTAINED HEREIN IS THE PROPRIETARY PROPERTY OF APPLE INC.
THE POSESSOR AGREES TO THE FOLLOWING:
I TO MAINTAIN THIS DOCUMENT IN CONFIDENCE
II NOT TO REPRODUCE OR COPY IT
III NOT TO REVEAL OR PUBLISH IT IN WHOLE OR PART
IV ALL RIGHTS RESERVED

## DISPLAY POWER

PP5V7_LCM_AVDDH
- C3901 10UF 20% 10V X5R-CERM 0402-8 ROOM=DISPLAY_B2B
- C3929 10UF 20% 10V X5R-CERM 0402-8 ROOM=DISPLAY_B2B
- FL3912 240-OHM-25%-0.42A-0.31DCR 0201 ROOM=DISPLAY_B2B
- C3933 2.2UF 20% 6.3V X5R-CERM 0201-1 ROOM=DISPLAY_B2B
- C3913 220PF 5% 10V C0G-CERM 01005 ROOM=DISPLAY_B2B

PP5V7_LCM_AVDDH_CONN

PP1V8
- FL3906 240-OHM-25%-0.42A-0.31DCR 0201 ROOM=DISPLAY_B2B
- C3934 2.2UF 20% 6.3V X5R-CERM 0201-1 ROOM=DISPLAY_B2B
- C3914 220PF 5% 10V C0G-CERM 01005 ROOM=DISPLAY_B2B

PP1V8_LCM_CONN

PN5V7_LCM_MESON_AVDDN
- FL3908 240-OHM-25%-0.42A-0.31DCR 0201 ROOM=DISPLAY_B2B
- C3909 220PF 5% 10V C0G-CERM 01005 ROOM=DISPLAY_B2B

PN5V7_LCM_MESON_AVDDN_CONN

PP5V7_MESON_AVDDH
- FL3909 240-OHM-25%-0.42A-0.31DCR 0201 ROOM=DISPLAY_B2B
- C3910 220PF 5% 10V C0G-CERM 01005 ROOM=DISPLAY_B2B
- C3940 2.2UF 20% 6.3V X5R-CERM 0201-1 ROOM=DISPLAY_B2B

PP5V7_MESON_AVDDH_CONN

PP1V8_TOUCH
- FL3910 33-OHM-25%-1500MA 0201 ROOM=DISPLAY_B2B
- C3932 2.2UF 20% 6.3V X5R-CERM 0201-1 ROOM=DISPLAY_B2B
- C3911 220PF 5% 10V C0G-CERM 01005 ROOM=DISPLAY_B2B

PP1V8_TOUCH_CONN

PP5V1_TOUCH_VDDH
- FL3911 240-OHM-25%-0.42A-0.31DCR 0201 ROOM=DISPLAY_B2B
- C3912 220PF 5% 10V C0G-CERM 01005 ROOM=DISPLAY_B2B

PP5V1_TOUCH_VDDH_CONN

## BACKLIGHT

PP_LCM_BL_ANODE
- FL3901 33-OHM-25%-1500MA 0201 ROOM=DISPLAY_B2B
- C3903 220PF 2% 50V C0G 0201 ROOM=DISPLAY_B2B

PP_LCM_BL_ANODE_CONN VOLTAGE=25.0V

PP_LCM_BL_CAT1
- FL3902 33-OHM-25%-1500MA 0201 ROOM=DISPLAY_B2B
- C3904 100PF 5% 35V NP0-C0G 01005 ROOM=DISPLAY_B2B

PP_LCM_BL_CAT1_CONN

PP_LCM_BL_CAT2
- FL3903 33-OHM-25%-1500MA 0201 ROOM=DISPLAY_B2B
- C3905 100PF 5% 35V NP0-C0G 01005 ROOM=DISPLAY_B2B

PP_LCM_BL_CAT2_CONN

## AC Coupling Caps

PP_VDD_MAIN
- C3930 220PF 5% 10V C0G-CERM 01005 ROOM=DISPLAY_B2B
- C3931 220PF 5% 10V C0G-CERM 01005 ROOM=DISPLAY_B2B
- C3935 220PF 5% 10V C0G-CERM 01005 ROOM=DISPLAY_B2B
- C3936 220PF 5% 10V C0G-CERM 01005 ROOM=DISPLAY_B2B

AC return path for LCM MIPI which is referenced to GND and VDD_MAIN

- C3937 220PF 5% 10V C0G-CERM 01005 ROOM=DISPLAY_B2B
- C3938 220PF 5% 10V C0G-CERM 01005 ROOM=DISPLAY_B2B
- C3939 220PF 5% 10V C0G-CERM 01005

For placement "along the way" as we route from SOC to B2B.

## DISPLAY MIPI

90_MIPI_AP_TO_LCM_CLK_P
- L3901 CRITICAL 650HM-0.7-2GHZ-3.4OHM TAM0605 ROOM=DISPLAY_B2B

90_MIPI_AP_TO_LCM_CLK_P_CONN

90_MIPI_AP_TO_LCM_CLK_N
- L3901 CRITICAL 650HM-0.7-2GHZ-3.4OHM TAM0605 ROOM=DISPLAY_B2B

90_MIPI_AP_TO_LCM_CLK_N_CONN

90_MIPI_AP_TO_LCM_DATA0_P
- L3902 CRITICAL 650HM-0.7-2GHZ-3.4OHM TAM0605 ROOM=DISPLAY_B2B

90_MIPI_AP_TO_LCM_DATA0_P_CONN

90_MIPI_AP_TO_LCM_DATA0_N
- L3902 CRITICAL 650HM-0.7-2GHZ-3.4OHM TAM0605 ROOM=DISPLAY_B2B

90_MIPI_AP_TO_LCM_DATA0_N_CONN

90_MIPI_AP_TO_LCM_DATA1_P
- L3903 CRITICAL 650HM-0.7-2GHZ-3.4OHM TAM0605 ROOM=DISPLAY_B2B

90_MIPI_AP_TO_LCM_DATA1_P_CONN

90_MIPI_AP_TO_LCM_DATA1_N
- L3903 CRITICAL 650HM-0.7-2GHZ-3.4OHM TAM0605 ROOM=DISPLAY_B2B

90_MIPI_AP_TO_LCM_DATA1_N_CONN

LCM_TO_CHESTNUT_PWR_EN
- FL3913 150OHM-25%-200MA-0.7DCR 01005 ROOM=DISPLAY_B2B
- C3916 220PF 5% 10V C0G-CERM 01005 ROOM=DISPLAY_B2B

LCM_TO_CHESTNUT_PWR_EN_CONN

## AOP/TOUCH INTERFACE

AP_TO_LCM_RESET_L
- FL3915 150OHM-25%-200MA-0.7DCR 01005 ROOM=DISPLAY_B2B
- R3901 100K 5% 1/32W MF 01005 ROOM=DISPLAY_B2B
- C3917 220PF 5% 10V C0G-CERM 01005 ROOM=DISPLAY_B2B

AP_TO_LCM_RESET_L_CONN

PMU_TO_LCM_PANICB
- R3915 10 5% 1/32W MF 01005 ROOM=DISPLAY_B2B
- C3918 100PF 5% 10V NP0-C0G 01005 ROOM=DISPLAY_B2B

PMU_TO_LCM_PANICB_CONN

LCM_TO_MANY_BSYNC
- FL3916 150OHM-25%-200MA-0.7DCR 01005 ROOM=DISPLAY_B2B
- C3919 56PF 5% 25V NP0-C0G-CERM 01005 ROOM=DISPLAY_B2B

LCM_TO_MANY_BSYNC_CONN

UART_TOUCH_TO_AOP_RXD
- FL3917 150OHM-25%-200MA-0.7DCR 01005 ROOM=DISPLAY_B2B
- C3920 56PF 5% 25V NP0-C0G-CERM 01005 ROOM=DISPLAY_B2B

UART_TOUCH_TO_AOP_RXD_CONN

UART_AOP_TO_TOUCH_TXD
- FL3918 150OHM-25%-200MA-0.7DCR 01005 ROOM=DISPLAY_B2B
- C3921 56PF 5% 25V NP0-C0G-CERM 01005 ROOM=DISPLAY_B2B

UART_AOP_TO_TOUCH_TXD_CONN

## AP/TOUCH INTERFACE

AP_TO_TOUCH_MAMBA_RESET_L
- FL3904 150OHM-25%-200MA-0.7DCR 01005 ROOM=DISPLAY_B2B
- C3915 220PF 5% 10V C0G-CERM 01005 ROOM=DISPLAY_B2B — To Display B2B
- C3902 220PF 5% 10V C0G-CERM 01005 ROOM=MAMBA_MESA — To Mamba/Mesa B2B

SPI_AP_TO_TOUCH_CS_L
- FL3922 150OHM-25%-200MA-0.7DCR 01005 ROOM=DISPLAY_B2B
- C3924 56PF 5% 25V NP0-C0G-CERM 01005 ROOM=DISPLAY_B2B

SPI_AP_TO_TOUCH_CS_CONN_L

SPI_AP_TO_TOUCH_SCLK
- R3923 0.00 0% 1/32W MF 01005 ROOM=DISPLAY_B2B
- NOSTUFF C3922 56PF 5% 25V NP0-C0G-CERM 01005 ROOM=DISPLAY_B2B
- C3923 56PF 5% 25V NP0-C0G-CERM 01005 ROOM=DISPLAY_B2B

SPI_AP_TO_TOUCH_SCLK_CONN

SPI_AP_TO_TOUCH_MOSI
- FL3924 150OHM-25%-200MA-0.7DCR 01005 ROOM=DISPLAY_B2B
- C3925 56PF 5% 25V NP0-C0G-CERM 01005 ROOM=DISPLAY_B2B

SPI_AP_TO_TOUCH_MOSI_CONN

SPI_TOUCH_TO_AP_MISO
- FL3919 150OHM-25%-200MA-0.7DCR 01005 ROOM=DISPLAY_B2B
- C3926 56PF 5% 25V NP0-C0G-CERM 01005 ROOM=DISPLAY_B2B

SPI_TOUCH_TO_AP_MISO_CONN

TOUCH_TO_AP_INT_L
- FL3920 150OHM-25%-200MA-0.7DCR 01005 ROOM=DISPLAY_B2B
- C3927 100PF 5% 16V NP0-C0G 01005 ROOM=DISPLAY_B2B

TOUCH_TO_AP_INT_L_CONN

AP_TO_CUMULUS_CLK32K
- R3908 33.2 1% 1/32W MF 01005 ROOM=DISPLAY_B2B
- C3928 100PF 5% 16V NP0-C0G 01005 ROOM=DISPLAY_B2B

AP_TO_CUMULUS_CLK_32K_CONN

NotebookSchematics.com

PAGE TITLE: B2B FILTERS: DISPLAY & TOUCH

Apple Inc.

DRAWING NUMBER: 051-00482 SIZE: D
REVISION: 8.0.0
BRANCH:
PAGE: 39 OF 53
SHEET: 39 OF 81

NOTICE OF PROPRIETARY PROPERTY:
THE INFORMATION CONTAINED HEREIN IS THE PROPRIETARY PROPERTY OF APPLE INC.
THE POSESSOR AGREES TO THE FOLLOWING:
I TO MAINTAIN THIS DOCUMENT IN CONFIDENCE
II NOT TO REPRODUCE OR COPY IT
III NOT TO REVEAL OR PUBLISH IT IN WHOLE OR PART
IV ALL RIGHTS RESERVED

# TRISTAR 2

z=0.45mm

<rdar:/24285280> EVT: 343S00091 (P2:343S00078)

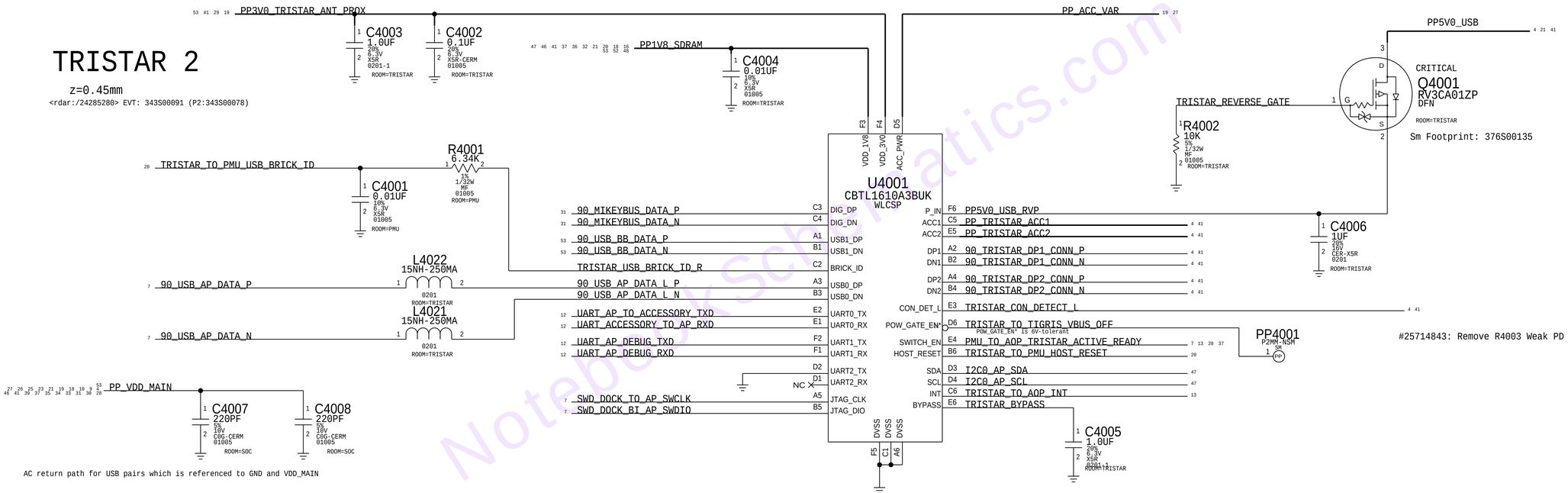


Notebook Schematics.com

PAGE TITLE: TRISTAR 2

Apple Inc.

DRAWING NUMBER: 051-00482 SIZE: D

REVISION: 8.0.0

BRANCH:

PAGE: 40 OF 53

SHEET: 40 OF 81

NOTICE OF PROPRIETARY PROPERTY:

THE INFORMATION CONTAINED HEREIN IS THE PROPRIETARY PROPERTY OF APPLE INC.
THE POSESSOR AGREES TO THE FOLLOWING:
I TO MAINTAIN THIS DOCUMENT IN CONFIDENCE
II NOT TO REPRODUCE OR COPY IT
III NOT TO REVEAL OR PUBLISH IT IN WHOLE OR PART
IV ALL RIGHTS RESERVED

# ANTENNA

Please loop in Matt Mow (Antenna Team)
when changing these components!

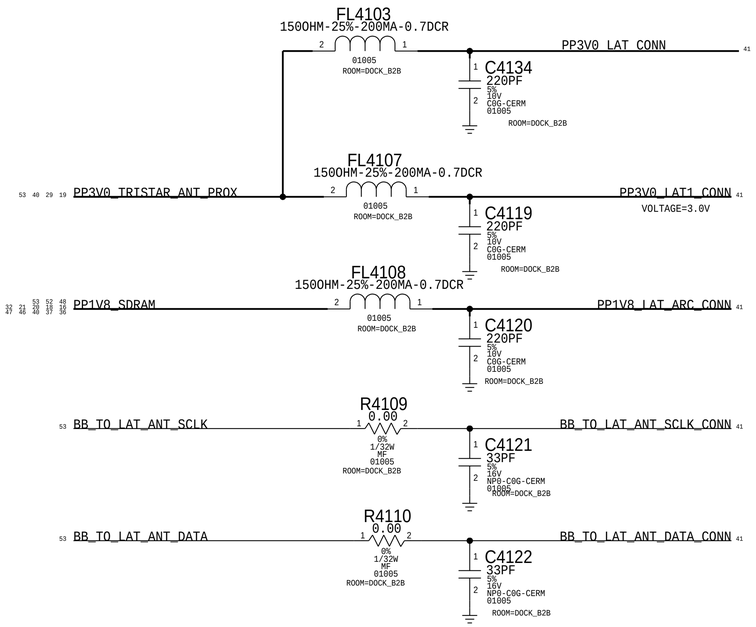


# ARC CONTROL

#26118161: Update FL4104 to 49.9ohm

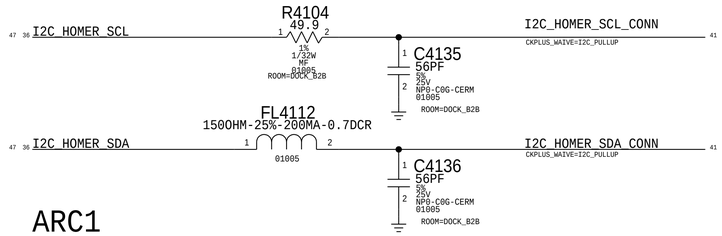


# ARC1

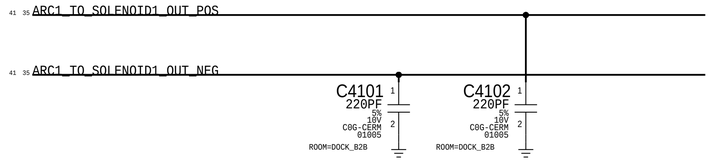


# Antenna GPIO

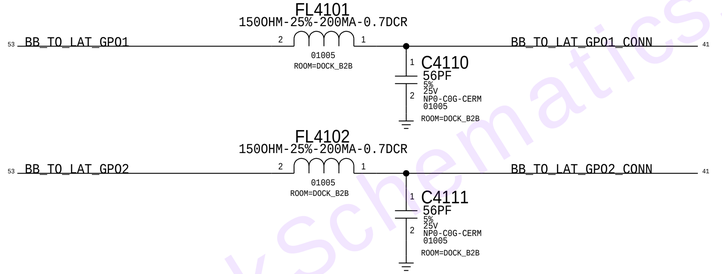


Per ANT Erdinc, change to cap

# LOWER MIC1/4

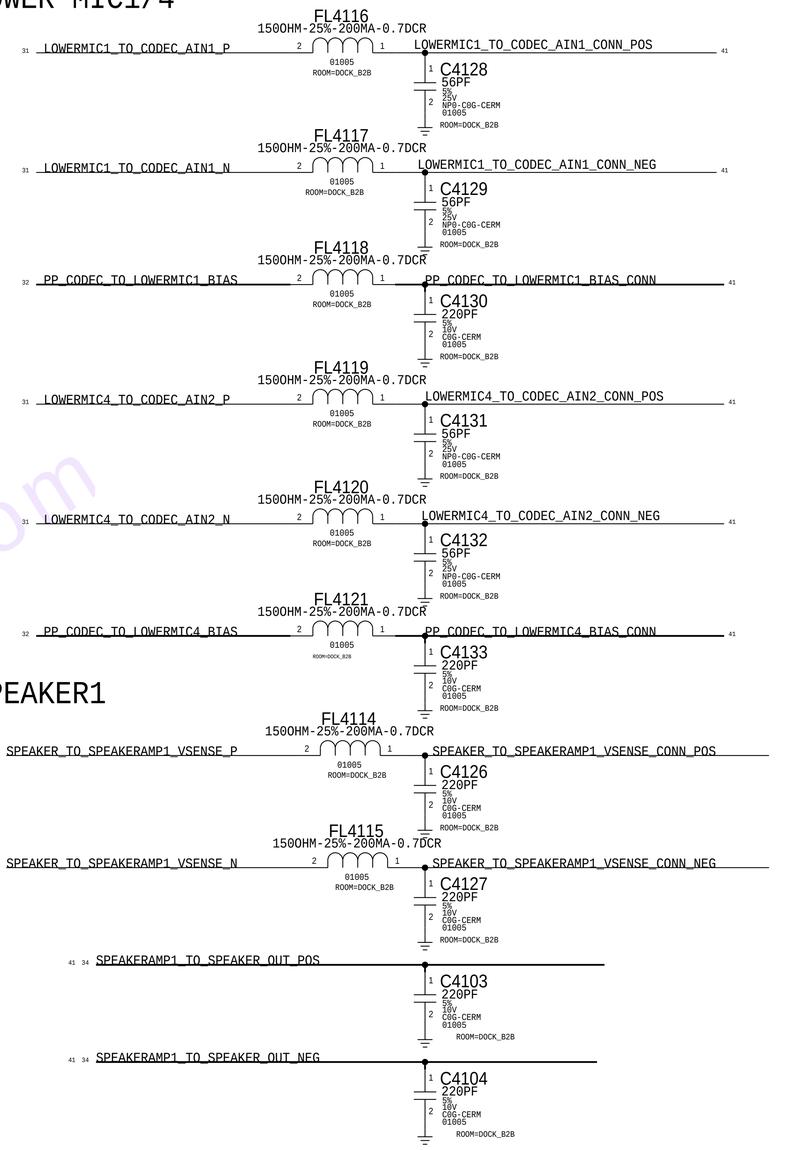


# SPEAKER1




# DOCK FLEX CONNECTOR

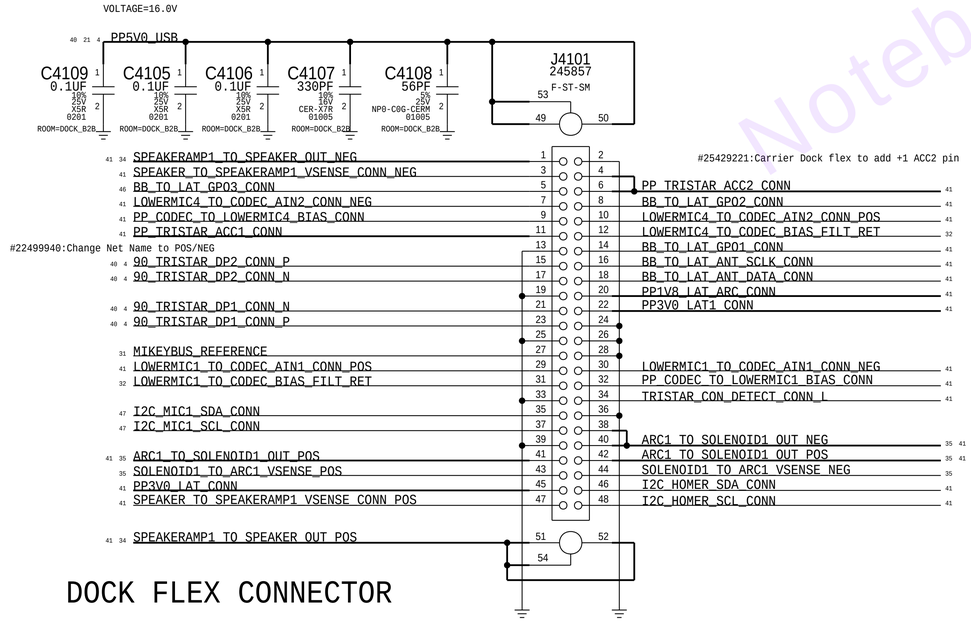


# TRISTAR

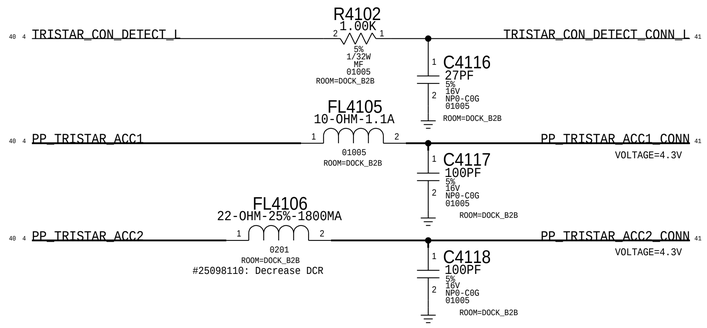


# USB AC Coupling

AC return path for USB pairs which is referenced to GND and VDD_MAIN

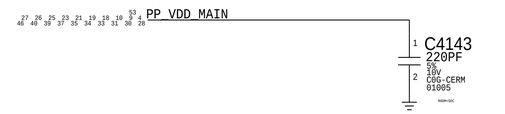


NotebookSchematics.com

PAGE TITLE
B2B:DOCK FLEX

Apple Inc.

DRAWING NUMBER 051-00482
SIZE D
REVISION 8.0.0
BRANCH
PAGE 41 OF 53
SHEET 41 OF 81

NOTICE OF PROPRIETARY PROPERTY:
THE INFORMATION CONTAINED HEREIN IS THE PROPRIETARY PROPERTY OF APPLE INC.
THE POSESSOR AGREES TO THE FOLLOWING:
I TO MAINTAIN THIS DOCUMENT IN CONFIDENCE
II NOT TO REPRODUCE OR COPY IT
III NOT TO REVEAL OR PUBLISH IT IN WHOLE OR PART
IV ALL RIGHTS RESERVED

NotebookSchematics.com

PAGE TITLE

spare

Apple Inc.

DRAWING NUMBER 051-00482

SIZE D

REVISION 8.0.0

BRANCH

PAGE 42 OF 53

SHEET 42 OF 81

NOTICE OF PROPRIETARY PROPERTY:

THE INFORMATION CONTAINED HEREIN IS THE PROPRIETARY PROPERTY OF APPLE INC.
THE POSESSOR AGREES TO THE FOLLOWING:
I TO MAINTAIN THIS DOCUMENT IN CONFIDENCE
II NOT TO REPRODUCE OR COPY IT
III NOT TO REVEAL OR PUBLISH IT IN WHOLE OR PART
IV ALL RIGHTS RESERVED

NotebookSchematics.com

PAGE TITLE

spare

Apple Inc.

DRAWING NUMBER 051-00482

SIZE D

REVISION 8.0.0

BRANCH

PAGE 43 OF 53

SHEET 43 OF 81

NOTICE OF PROPRIETARY PROPERTY:

THE INFORMATION CONTAINED HEREIN IS THE PROPRIETARY PROPERTY OF APPLE INC.
THE POSESSOR AGREES TO THE FOLLOWING:
I TO MAINTAIN THIS DOCUMENT IN CONFIDENCE
II NOT TO REPRODUCE OR COPY IT
III NOT TO REVEAL OR PUBLISH IT IN WHOLE OR PART
IV ALL RIGHTS RESERVED

## STROBE1

PP_STROBE_DRIVER1_WARM_LED (26 45)

C4402 220PF 5% 10V C0G-CERM 01005 ROOM=RIGHT_BUTTON

C4409 27PF 5% 16V NP0-C0G 01005 ROOM=RIGHT_BUTTON

PP_STROBE_DRIVER1_COOL_LED (26 45)

C4406 220PF 5% 10V C0G-CERM 01005 ROOM=RIGHT_BUTTON

C4408 27PF 5% 16V NP0-C0G 01005 ROOM=RIGHT_BUTTON

FL4404 150OHM-25%-200MA-0.7DCR 01005

20 STROBE_MODULE_NTC — STROBE_MODULE_NTC_CONN 45

R4401 27K 0.5% 1/32W MF 01005 ROOM=RIGHT_BUTTON

C4407 220PF 5% 10V C0G-CERM 01005 ROOM=RIGHT_BUTTON

#24544474: Can R4401 be changed to 5%?

## STROBE2

PP_STROBE_DRIVER2_WARM_LED (26 45)

C4410 220PF 5% 10V C0G-CERM 01005 ROOM=RIGHT_BUTTON

C4413 27PF 5% 16V NP0-C0G 01005 ROOM=RIGHT_BUTTON

PP_STROBE_DRIVER2_COOL_LED (26 45)

C4411 220PF 5% 10V C0G-CERM 01005 ROOM=RIGHT_BUTTON

C4412 27PF 5% 16V NP0-C0G 01005 ROOM=RIGHT_BUTTON

## BUTTONS

R4402 100 5% 1/32W MF 01005 ROOM=RIGHT_BUTTON

20 BUTTON_POWER_KEY_L — BUTTON_POWER_KEY_CONN_L 45

C4401 27PF 5% 6.3V NP0-C0G 0201 ROOM=RIGHT_BUTTON

DZ4401 5.5V-6.2PF 0201 ROOM=RIGHT_BUTTON

CHASSIS_GND_BS401 4 44

FL4407 120-OHM-0.220A 01005 ROOM=LEFT_BUTTON

20 BUTTON_RINGER_A — BUTTON_RINGER_A_CONN 45

C4418 27PF 5% 6.3V NP0-C0G 0201 ROOM=LEFT_BUTTON

DZ4402 5.5V-6.2PF 0201 ROOM=LEFT_BUTTON

CHASSIS_GND_BS401 4 44

R4405 100 5% 1/32W MF 01005 ROOM=LEFT_BUTTON

20 BUTTON_VOL_DOWN_L — BUTTON_VOL_DOWN_CONN_L 45

C4419 100PF 5% 16V NP0-C0G 01005 ROOM=LEFT_BUTTON

DZ4403 12V-33PF 01005-1 ROOM=LEFT_BUTTON

CHASSIS_GND_BS401 4 44

R4406 100 5% 1/32W MF 01005 ROOM=LEFT_BUTTON

20 12 BUTTON_VOL_UP_L — BUTTON_VOL_UP_CONN_L 45

C4420 100PF 5% 16V NP0-C0G 01005 ROOM=LEFT_BUTTON

DZ4404 12V-33PF 01005-1 ROOM=LEFT_BUTTON

CHASSIS_GND_BS401 4 44

## HAWKING

#24678255:DOE with 10% and/20% cap

31 HAWKING_TO_CODEC_AIN7_N — HAWKING_TO_CODEC_AIN7_N_CONN 45

C4417 0.22UF 20% 6.3V X5R 01005 ROOM=RIGHT_BUTTON

31 HAWKING_TO_CODEC_AIN7_P — HAWKING_TO_CODEC_AIN7_C_P — HAWKING_TO_CODEC_AIN7_P_CONN 45

C4421 0.22UF 20% 6.3V X5R 01005 ROOM=RIGHT_BUTTON

CKPLUS_WAIVE=MISS_N_DIFFPAIR

FL4405 150OHM-25%-200MA-0.7DCR 01005 ROOM=RIGHT_BUTTON

C4415 56PF 5% 25V NP0-C0G-CERM 01005 ROOM=RIGHT_BUTTON

NOSTUFF C4422 180PF 10% 10V CERM 01005 ROOM=RIGHT_BUTTON

FL4406 150OHM-25%-200MA-0.7DCR 01005 ROOM=RIGHT_BUTTON

19 PP1V8_HAWKING — PP1V8_HAWKING_CONN 45

C4416 2.2UF 20% 6.3V X5R-CERM 0201-1 ROOM=RIGHT_BUTTON

C4414 220PF 5% 10V C0G-CERM 01005 ROOM=RIGHT_BUTTON

## MIC2 (ANC REF)

FL4403 150OHM-25%-200MA-0.7DCR 01005 ROOM=RIGHT_BUTTON

32 PP_CODEC_TO_REARMIC2_BIAS — PP_CODEC_TO_REARMIC2_BIAS_CONN 45

C4403 220PF 5% 10V C0G-CERM 01005 ROOM=RIGHT_BUTTON

FL4401 150OHM-25%-200MA-0.7DCR 01005 ROOM=RIGHT_BUTTON

31 REARMIC2_TO_CODEC_AIN3_P — REARMIC2_TO_CODEC_AIN3_CONN_P 45

C4404 56PF 5% 25V NP0-C0G-CERM 01005 ROOM=RIGHT_BUTTON

FL4402 150OHM-25%-200MA-0.7DCR 01005 ROOM=RIGHT_BUTTON

31 REARMIC2_TO_CODEC_AIN3_N — REARMIC2_TO_CODEC_AIN3_CONN_N 45

C4405 56PF 5% 25V NP0-C0G-CERM 01005 ROOM=RIGHT_BUTTON

NotebookSchematics.com

PAGE TITLE: B2B FILTERS: RIGHT BUTTON FLEX

Apple Inc.

DRAWING NUMBER 051-00482 SIZE D

REVISION 8.0.0

BRANCH

PAGE 44 OF 53

SHEET 44 OF 81

NOTICE OF PROPRIETARY PROPERTY:
THE INFORMATION CONTAINED HEREIN IS THE PROPRIETARY PROPERTY OF APPLE INC.
THE POSESSOR AGREES TO THE FOLLOWING:
I TO MAINTAIN THIS DOCUMENT IN CONFIDENCE
II NOT TO REPRODUCE OR COPY IT
III NOT TO REVEAL OR PUBLISH IT IN WHOLE OR PART
IV ALL RIGHTS RESERVED

# UTAH-D FLEX CONNECTOR

516S00152 RCPT (USED ON MLB) <-- THIS ONE
516S00151 PLUG

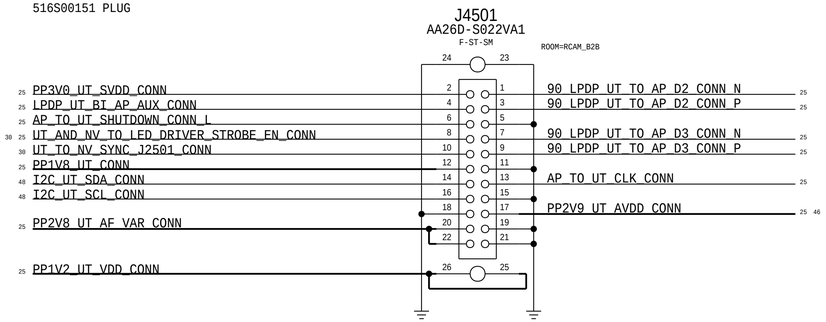


# FOREHEAD FLEX CONNECTOR

MLB: 516S00146 (MCO REV 27)




# DISPLAY / TOUCH FLEX CONNECTOR

MLB: 516S00050

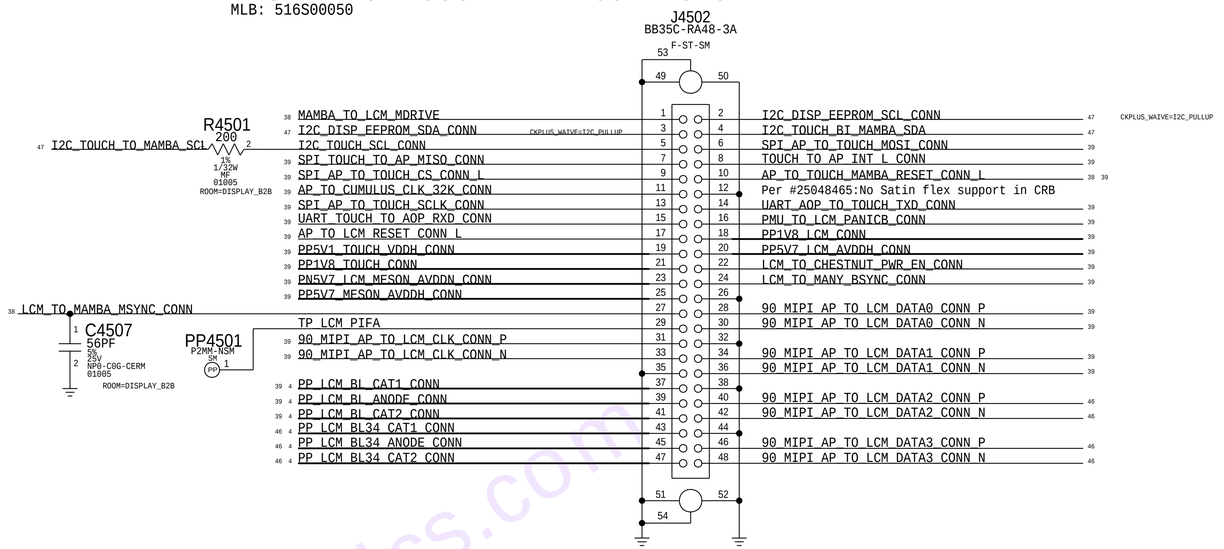


# COMBO BUTTON FLEX CONNECTOR

APPLE APN: 516S00150 <-- THIS ONE ON MLB (matched MCO rev 27)
APPLE APN: 516S00149

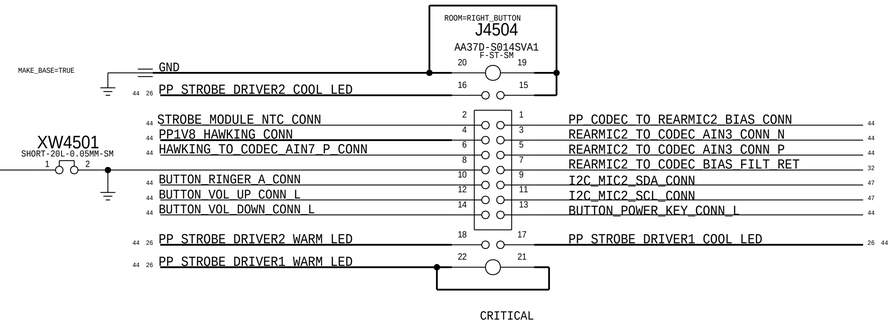


NotebookSchematics.com

SYNC_MASTER=sync SYNC_DATE=05/17/2016

PAGE TITLE
# B2B FF SPECIFIC

Apple Inc.

DRAWING NUMBER 051-00482
SIZE D
REVISION 8.0.0
BRANCH
PAGE 45 OF 53
SHEET 45 OF 81

NOTICE OF PROPRIETARY PROPERTY:
THE INFORMATION CONTAINED HEREIN IS THE PROPRIETARY PROPERTY OF APPLE INC.
THE POSESSOR AGREES TO THE FOLLOWING:
I TO MAINTAIN THIS DOCUMENT IN CONFIDENCE
II NOT TO REPRODUCE OR COPY IT
III NOT TO REVEAL OR PUBLISH IT IN WHOLE OR PART
IV ALL RIGHTS RESERVED

## 2ND BACKLIGHT DRIVER - 4LED

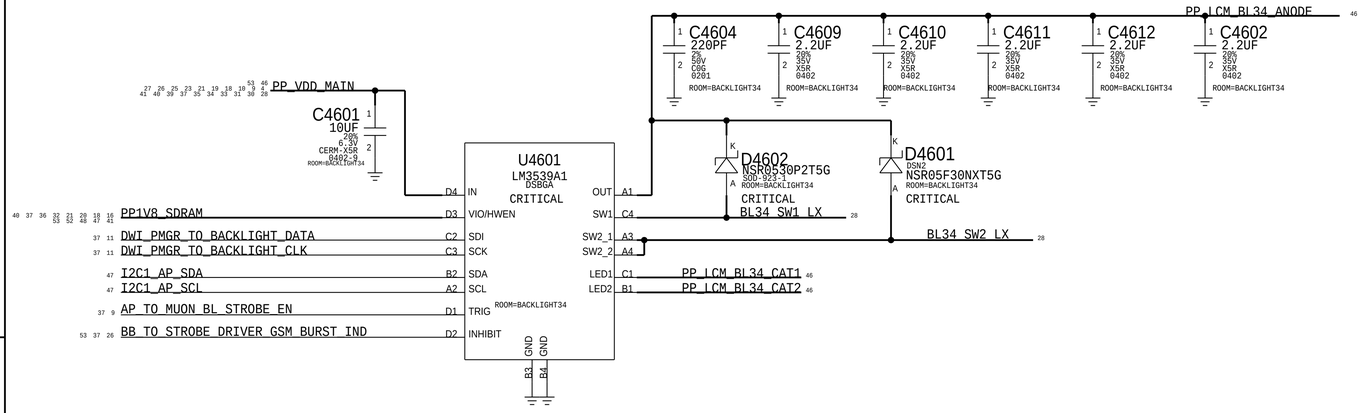


## ISP I2C1

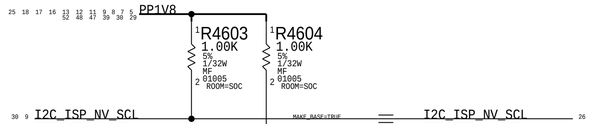


## TOUCH I2C

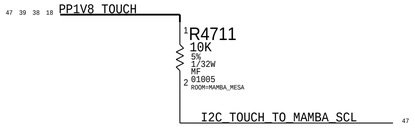


## VDD MAIN CAP
## AC Coupling Caps

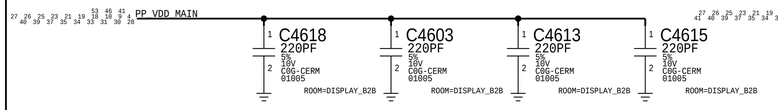


## ARC CAP

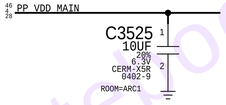


## CHESTNUT CAP

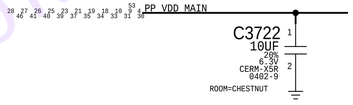


AC return path for LCM MIPI which is referenced to GND and VDD_MAIN

## ACC Buck Caps

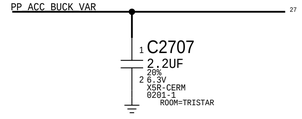


## Top Speaker Compass Coil

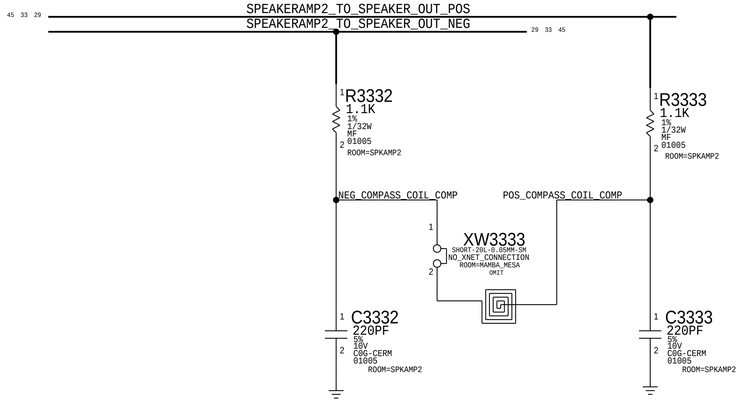


## THIS PAGE UNIQUE TO LARGE FORM FACTOR

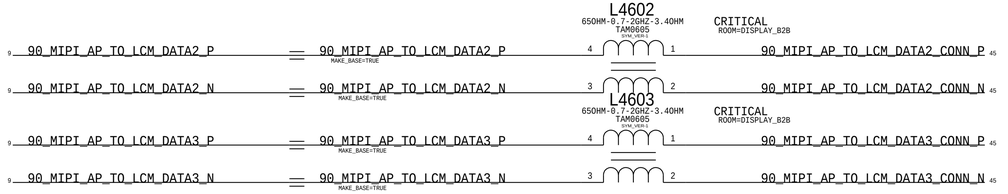


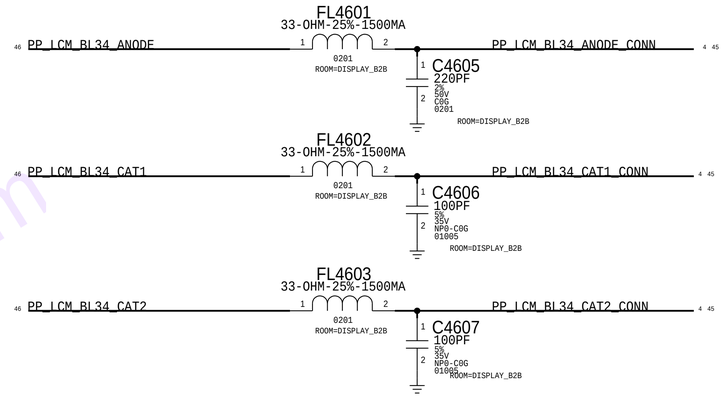


## Dock B2B (Pg 41)

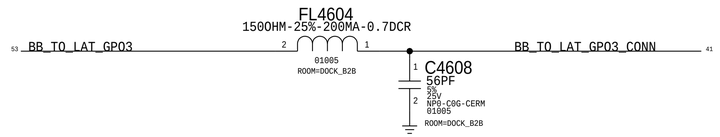


## UT B2B

## Extra RF GND

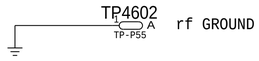


NotebookSchematics.com

PAGE TITLE
LARGE FORM FACTOR SPECIFIC

Apple Inc.

DRAWING NUMBER 051-00482
SIZE D
REVISION 8.0.0
BRANCH
PAGE 46 OF 53
SHEET 46 OF 81

NOTICE OF PROPRIETARY PROPERTY:
THE INFORMATION CONTAINED HEREIN IS THE PROPRIETARY PROPERTY OF APPLE INC.
THE POSESSOR AGREES TO THE FOLLOWING:
I TO MAINTAIN THIS DOCUMENT IN CONFIDENCE
II NOT TO REPRODUCE OR COPY IT
III NOT TO REVEAL OR PUBLISH IT IN WHOLE OR PART
IV ALL RIGHTS RESERVED

# AP

## I2C0

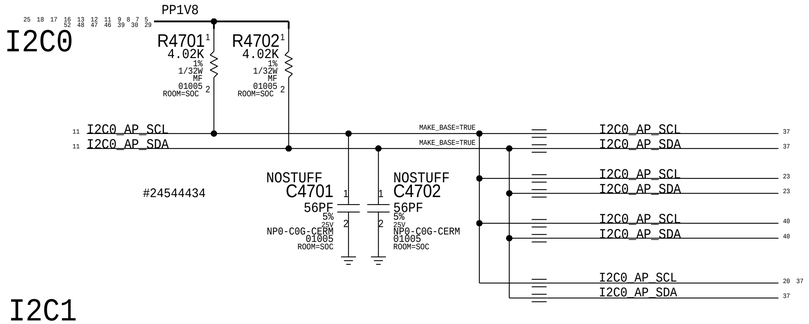


## I2C1

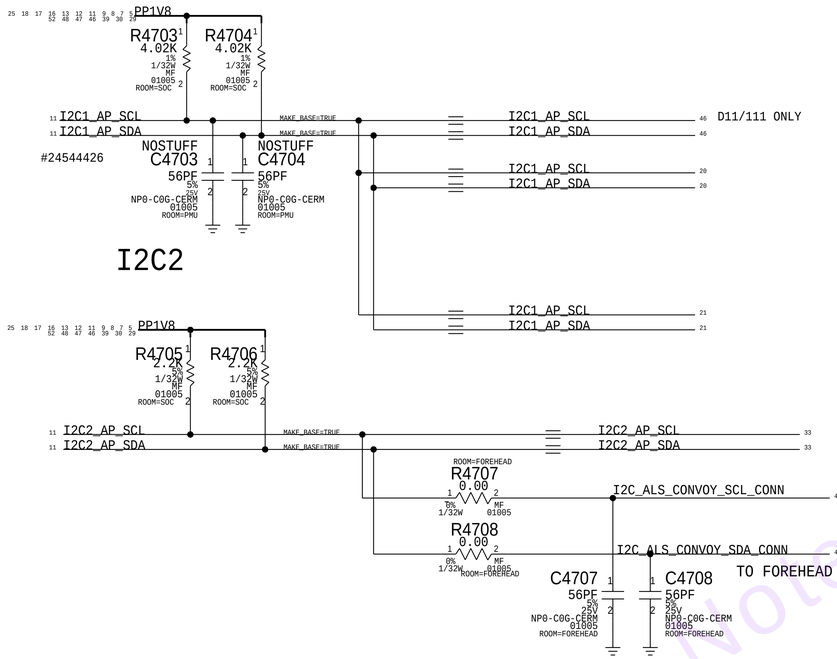


## I2C2




# TOUCH

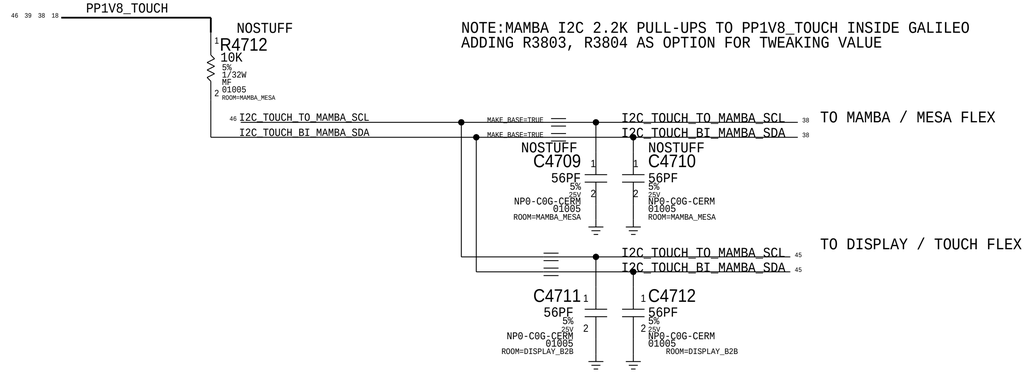


# HOMER

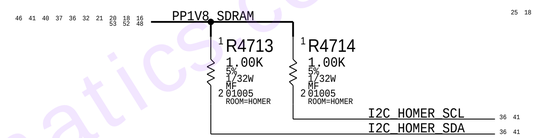


# I2C5

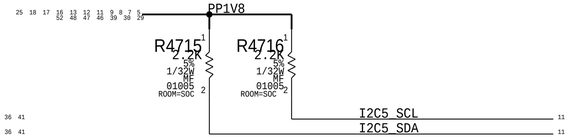


# I2C3

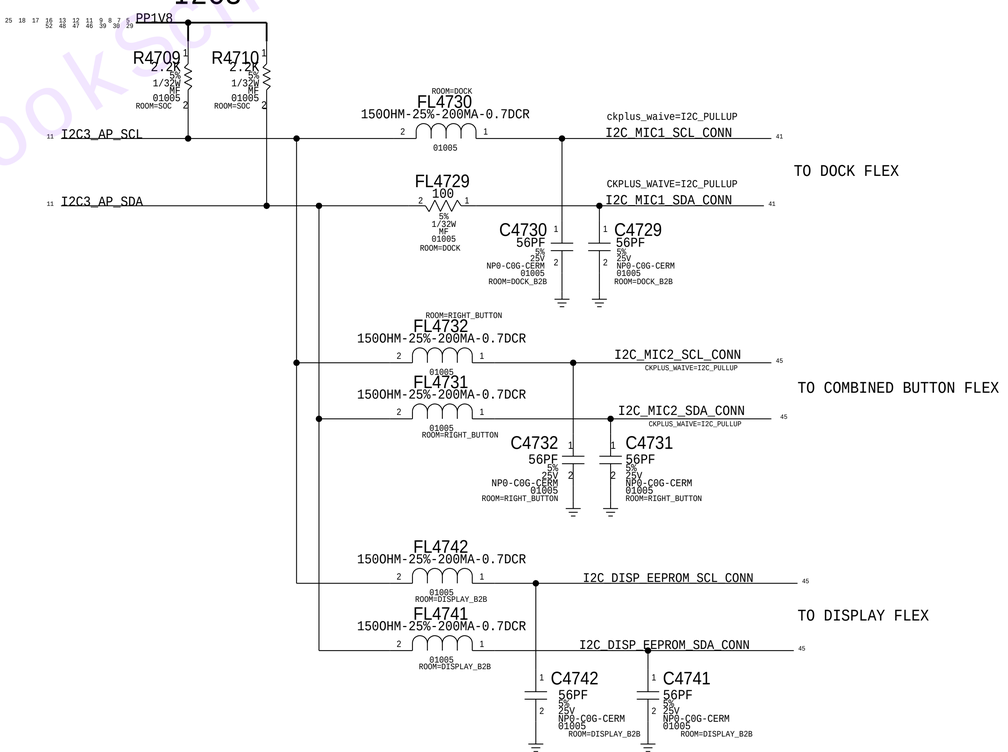


Notebook Schematics.com

PAGE TITLE

I2C MAP: AP, TOUCH, HOMER, I2C5

Apple Inc.

DRAWING NUMBER 051-00482

SIZE D

REVISION 8.0.0

BRANCH

PAGE 47 OF 53

SHEET 47 OF 81

NOTICE OF PROPRIETARY PROPERTY:

THE INFORMATION CONTAINED HEREIN IS THE PROPRIETARY PROPERTY OF APPLE INC.
THE POSESSOR AGREES TO THE FOLLOWING:
I TO MAINTAIN THIS DOCUMENT IN CONFIDENCE
II NOT TO REPRODUCE OR COPY IT
III NOT TO REVEAL OR PUBLISH IT IN WHOLE OR PART
IV ALL RIGHTS RESERVED

# AOP

## I2C

PP1V8_SDRAM

R4801 2.2K 5% 1/32W MF 01005

R4802 2.2K 5% 1/32W MF 01005

C4807 0.1UF 20% 6.3V X5R-CERM 01005 ROOM=SOC

U4802 MAX20312 WLP ROOM=SOC

VCC B1

IOVCC1 A2

IOVCC2 B2

GND A1

#24544699: Support 1MHz

I2C_AOP_SCL — MAKE_BASE=TRUE

I2C_AOP_SDA — MAKE_BASE=TRUE

I2C_AOP_SCL 34

I2C_AOP_SDA 34

I2C_AOP_SCL 35

I2C_AOP_SDA 35

FL4815 150OHM-25%-200MA-0.7DCR 01005 ROOM=FOREHEAD

TO FCAM FLEX

I2C_PROX_SCL_CONN 45 CKPLUS_WAIVE=I2C_PULLUP

I2C_PROX_SDA_CONN 45 CKPLUS_WAIVE=I2C_PULLUP

R4815 33.2 1% 1/32W MF 01005 ROOM=FOREHEAD

#24958320:Intentional R4815 Change
Reduce undershoot when Prox Driving

Intentional R4815 Change

C4803 56PF 5% 25V NP0-C0G-CERM 01005 ROOM=FOREHEAD

C4804 56PF 5% 25V NP0-C0G-CERM 01005 ROOM=FOREHEAD

PP1V8_MESA 38 19

R4803 4.7K 1% 1/32W MF 01005 ROOM=MAMBA_MESA

R4804 4.7K 1% 1/32W MF 01005 ROOM=MAMBA_MESA

PP1V8_SDRAM

U4805 74LVC1G3157GX X2SON6 VCC GND S Z Y0 Y1 NC

I2C_AOP_SCL_ISO

R4806 0.00 0% 1/32W MF 01005 ROOM=MAMBA_MESA

I2C_MESA_TURTLE_SCL_CONN 38

C4809 56PF 5% 25V NP0-C0G-CERM 01005 ROOM=MAMBA_MESA

AOP_TO_MESA_I2C_ISO_EN 13

R4805 511K 1% 1/32W MF 01005

PP1V8_SDRAM

U4806 74LVC1G3157GX X2SON6 VCC GND S Z Y0 Y1 NC

I2C_AOP_SDA_ISO

R4807 0.00 0% 1/32W MF 01005 ROOM=MAMBA_MESA

I2C_MESA_TURTLE_SDA_CONN 38

C4810 56PF 5% 25V NP0-C0G-CERM 01005 ROOM=MAMBA_MESA

TO MAMBA/MESA FLEX

# ISP

## I2C0

PP1V8

#24550735: ISP I2C0 PU

R4808 1.00K 5% 1/32W MF 01005 ROOM=SOC

R4809 1.00K 5% 1/32W MF 01005 ROOM=SOC

I2C_ISP_UT_SCL 9 — MAKE_BASE=TRUE

I2C_ISP_UT_SDA 9 — MAKE_BASE=TRUE

I2C_ISP_UT_SCL 26

I2C_ISP_UT_SDA 26

## I2C1

See page 46

## I2C2

PP1V8

R4810 2.2K 5% 1/32W MF 01005 ROOM=SOC

R4811 2.2K 5% 1/32W MF 01005 ROOM=SOC

I2C_ISP_NH_SCL 9 — MAKE_BASE=TRUE

I2C_ISP_NH_SDA 9 — MAKE_BASE=TRUE

R4816 0.00 0% 1/32W MF 01005 ROOM=RCAM_B2B

C4817 56PF 5% 25V NP0-C0G-CERM 01005 ROOM=RCAM_B2B

I2C_UT_SCL_CONN 45 CKPLUS_WAIVE=I2C_PULLUP

R4817 0.00 0% 1/32W MF 01005 ROOM=RCAM_B2B

C4816 56PF 5% 25V NP0-C0G-CERM 01005 ROOM=RCAM_B2B

I2C_UT_SDA_CONN 45 CKPLUS_WAIVE=I2C_PULLUP

R4812 0.00 0% 1/32W MF 01005 ROOM=FOREHEAD

C4812 56PF 5% 25V NP0-C0G-CERM 01005 ROOM=FOREHEAD

I2C_NH_SCL_CONN 45 CKPLUS_WAIVE=I2C_PULLUP

R4813 0.00 0% 1/32W MF 01005 ROOM=FOREHEAD

C4813 56PF 5% 25V NP0-C0G-CERM 01005 ROOM=FOREHEAD

I2C_NH_SDA_CONN 45 CKPLUS_WAIVE=I2C_PULLUP

Notebook Schematics.com

PAGE TITLE: I2C MAP AOP

Apple Inc.

DRAWING NUMBER: 051-00482 SIZE: D

REVISION: 8.0.0

BRANCH:

PAGE: 48 OF 53

SHEET: 48 OF 81

NOTICE OF PROPRIETARY PROPERTY:
THE INFORMATION CONTAINED HEREIN IS THE PROPRIETARY PROPERTY OF APPLE INC.
THE POSESSOR AGREES TO THE FOLLOWING:
I TO MAINTAIN THIS DOCUMENT IN CONFIDENCE
II NOT TO REPRODUCE OR COPY IT
III NOT TO REVEAL OR PUBLISH IT IN WHOLE OR PART
IV ALL RIGHTS RESERVED

# D1x I2C Table

| Bus | Device | Binary | 7-bit Address | 8-bit Address | Max Speed |
|---|---|---|---|---|---|
| **ISP I2C0** *1MHz* | SALT LAKE (PRIMARY) | 0010000X | 0x10 | 0x20 | 1 MHz |
| | SALT LAKE (SECONDARY) | 0110000X | 0x30 | 0x60 | 1 MHz |
| | GRUNBERG (STANDARD) | 0011100X | 0x1C | 0x38 | 1 MHz |
| | GRUNBERG (SPECIAL ABSOLUTE R/W) | 0011101X | 0x1D | 0x3A | 1 MHz |
| | GRUNBERG (SPECIAL DELTA READ) | 0011110X | 0x1E | 0x3C | 1 MHz |
| | STROBE 1 | 1100011X | 0x63 | 0xC6 | 1 MHz |
| **ISP I2C1** *1MHz* | LAS VEGAS (PRIMARY) | 0100000X | 0x20 | 0x40 | 1 MHz |
| | LAS VEGAS (SECONDARY) | 0110000X | 0x30 | 0x60 | 1 MHz |
| | EDWIN | 1100011X | 0x63 | 0xC6 | 400 kHz |
| | STROBE 2 | 0000110X | 0x06 | 0x0C | 1 MHz |
| **ISP I2C2** *400kHz* | CONCORD | 0010000X | 0x10 | 0x20 | 1 MHz |
| **AOP I2C** *1MHz* | ARC DRIVER 1 | 100000YX | 0x41 | 0x82 | 1 MHz |
| | PROX | 1011000X | 0x58 | 0xB0 | 1 MHz |
| | SPKAMP1 (L26) | 100000YX | 0x40 | 0x80 | 1 MHz |
| | TURTLE | 0101100X | 0x2c | 0x58 | 400 kHz |
| | MESA | 1100001X | 0x61 | 0xC2 | 400 kHz |
| **Touch I2C** *600kHz* | MAMBA | 1100000X | 0x60 | 0xC0 | 1 MHz |
| | MESON | 1000000X | 0x40 | 0x80 | 510 kHz |
| **EEPROM I2C** | EEPROM | 1010001X | 0x51 | 0xA2 | 400 kHz |
| **AP I2C0** *400kHz* | BOOST | 1110101X | 0x75 | 0xEA | 3.4 MHz |
| | TRISTAR | 0011010X | 0x1A | 0x34 | 400 kHz |
| | BACKLIGHT 1 | 1100010X | 0x62 | 0xC4 | 1 MHz |
| | CHESTNUT | 0100111X | 0x27 | 0x4E | 400 kHz |
| **AP I2C1** *400kHz* | ADELYN | 1110100X | 0x74 | 0xE8 | 400 kHz |
| | TIGRIS | 1110101X | 0x75 | 0xEA | 400 kHz |
| | BACKLIGHT 2 | 1100010X | 0x62 | 0xC4 | 1 MHz |
| **AP I2C2** *400kHz* | ALS | 0101001X | 0x29 | 0x52 | 400 kHz |
| | CONVOY | 0100001X | 0x21 | 0x42 | 3.4 MHz |
| | | 0100010X | 0x22 | 0x44 | 400 kHz |
| | SPKAMP 2 (L26) | 10000ZYX | 0x40 | 0x80 | 400 MHz |
| **AP I2C3** *100kHz* | DOCK FLEX (MIC1) | 1010100X | 0x54 | 0xA8 | 1 MHz |
| | COMBINED BUTTON FLEX (MIC2) | 1010100X | 0x56 | 0xAC | 1 MHz |
| | DISP EEPROM | 1010001X | 0x51 | 0xA2 | 400kHz |
| **Homer I2C** *1MHz* | SCHRODINGER (STANDARD) | 0001110X | 0xE | 0x1C | 1 MHz |
| | SCHRODINGER (CAL REG'S) | 0001111X | 0xF | 0x1D | 1 MHz |
| | EEPROM (STANDARD) | 1010000X | 0x50 | 0xA0 | |
| | EEPROM (CONFIG) | 1010000X | 0x50 | 0xA0 | |

NotebookSchematics.com

PAGE TITLE: I2C TABLE

Apple Inc.

DRAWING NUMBER: 051-00482 SIZE: D
REVISION: 8.0.0
BRANCH:
PAGE: 49 OF 53
SHEET: 49 OF 81

NOTICE OF PROPRIETARY PROPERTY:
THE INFORMATION CONTAINED HEREIN IS THE PROPRIETARY PROPERTY OF APPLE INC.
THE POSESSOR AGREES TO THE FOLLOWING:
I TO MAINTAIN THIS DOCUMENT IN CONFIDENCE
II NOT TO REPRODUCE OR COPY IT
III NOT TO REVEAL OR PUBLISH IT IN WHOLE OR PART
IV ALL RIGHTS RESERVED

spare

NotebookSchematics.com

spare

NotebookSchematics.com

This page controls elements different accross all MLBs

# PCIe Lanes

NotebookSchematics.com

SYNC_MASTER=david-copy SYNC_DATE=03/01/2016

PAGE TITLE
MLB UNIQUE

Apple Inc.

DRAWING NUMBER 051-00482 SIZE D

REVISION 8.0.0

BRANCH

PAGE 52 OF 53

SHEET 52 OF 81

NOTICE OF PROPRIETARY PROPERTY:
THE INFORMATION CONTAINED HEREIN IS THE PROPRIETARY PROPERTY OF APPLE INC.
THE POSESSOR AGREES TO THE FOLLOWING:
I TO MAINTAIN THIS DOCUMENT IN CONFIDENCE
II NOT TO REPRODUCE OR COPY IT
III NOT TO REVEAL OR PUBLISH IT IN WHOLE OR PART
IV ALL RIGHTS RESERVED

# Wifi/BT

PP_VDD_MAIN
PP1V8_SDRAM

PMUGPIO_TO_WLAN_CLK32K

PMU_TO_WLAN_REG_ON
PMU_TO_BT_REG_ON
BT_TO_PMU_HOST_WAKE
AP_TO_BT_WAKE

90_PCIE_AP_TO_WLAN_REFCLK_P
90_PCIE_AP_TO_WLAN_REFCLK_N
90_PCIE_AP_TO_WLAN_TXD_P
90_PCIE_AP_TO_WLAN_TXD_N
90_PCIE_WLAN_TO_AP_RXD_P
90_PCIE_WLAN_TO_AP_RXD_N
PCIE_AP_TO_WLAN_RESET_L
PCIE_WLAN_BT_AP_CLKREQ_L
WLAN_TO_PMU_HOST_WAKE
AP_TO_WLAN_DEVICE_WAKE

UART_AP_TO_WLAN_TXD
UART_WLAN_TO_AP_RXD
UART_AP_TO_WLAN_RTS_L
UART_WLAN_TO_AP_CTS_L

UART_AP_TO_BT_TXD
UART_BT_TO_AP_RXD
UART_AP_TO_BT_RTS_L
UART_BT_TO_AP_CTS_L

AOP_TO_WLAN_CONTEXT_A
AOP_TO_WLAN_CONTEXT_B

I2S_AP_TO_BT_BCLK
I2S_AP_TO_BT_LRCLK
I2S_BT_TO_AP_DIN
I2S_AP_TO_BT_DOUT

UART_BB_TO_WLAN_COEX
UART_WLAN_TO_BB_COEX

50_UAT_WLAN_5G_WEST
50_UAT_WLAN_2G_EAST
50_UAT_WLAN_5G_EAST
50_WLAN_G_1
50_WLAN_A_1
50_UAT2_M

WIFI_MLB

# Cellular

PP_VDD_MAIN
PP1V8_SDRAM

PP_VDD_BOOST
BBPMU_TO_PMU_AMUX1
BBPMU_TO_PMU_AMUX2
BBPMU_TO_PMU_AMUX3

NC

Opposite polarity on Karoo -->

AP_TO_BBPMU_RADIO_ON_L
PMU_TO_BBPMU_RESET_L
AP_TO_BB_RESET_L

BB_TO_AP_RESET_ACT_L
BB_TO_AP_RESET_DETECT_L
BB_TO_STROBE_DRIVER_GSM_BURST_IND
AP_TO_BB_MESA_ON
AP_TO_BB_TIME_MARK
AP_TO_BB_COREDUMP
LCM_TO_MANY_BSYNC
AP_TO_BB_IPC_GPIO1

90_PCIE_AP_TO_BB_REFCLK_P
90_PCIE_AP_TO_BB_REFCLK_N
90_PCIE_AP_TO_BB_TXD_P
90_PCIE_AP_TO_BB_TXD_N
90_PCIE_BB_TO_AP_RXD_P
90_PCIE_BB_TO_AP_RXD_N
PCIE_AP_TO_BB_RESET_L
PCIE_BB_BT_AP_CLKREQ_L
BB_TO_PMU_PCIE_HOST_WAKE_L

UART_AP_TO_BB_TXD
UART_BB_TO_AP_RXD

UART_AOP_TO_BB_TXD
UART_BB_TO_AOP_RXD

UART_AOP_TO_GNSS_TXD
UART_GNSS_TO_AOP_RXD

I2S_BB_TO_AP_BCLK
I2S_BB_TO_AP_LRCLK
I2S_AP_TO_BB_DOUT
I2S_BB_TO_AP_DIN

UART_BB_TO_WLAN_COEX
UART_WLAN_TO_BB_COEX

NFC_SWP
NFC_TO_BB_CLK_REQ
BB_TO_NFC_CLK
NFC_SWP_MUX
SE2_READY
AP_TO_ICEFALL_FW_DWLD_REQ  MAKE_BASE=TRUE
SE2_PWR_REQ
SE2_PRESENT
ICEFALL_LDO_ENABLE

SWD_AP_TO_MANY_SWCLK
SWD_AOP_BI_BB_SWDIO
PMU_TO_BB_USB_VBUS_DETECT
90_USB_BB_DATA_P
90_USB_BB_DATA_N

50_UAT_WLAN_2G_WEST_PLEXER
50_UAT_LB_MLB_SOUTH
50_UAT_MB_HB_SOUTH
50_UUAT_LB_MLB_NORTH
50_UAT1_WEST

BB_TO_UAT_SCLK  MAKE_BASE=TRUE
BB_TO_UAT_DATA  MAKE_BASE=TRUE
50_UAT1_TUNER
BUFFER_GPO1

Per JimYang 3/17, D11 only, NC BUFFER_GPO2

NC

BB_TO_LAT_ANT_SCLK
BB_TO_LAT_ANT_DATA
BB_TO_LAT_GPO1
BB_TO_LAT_GPO2
BB_TO_LAT_GPO3

PMU_TO_GNSS_EN
UART_AP_TO_GNSS_TXD
UART_GNSS_TO_AP_RXD
UART_AP_TO_GNSS_RTS_L
UART_GNSS_TO_AP_CTS_L
GNSS_TO_PMU_HOST_WAKE
AP_TO_GNSS_TIME_MARK

RADIO_MLB

I33
338S0000_logic_1164_a11
TRUE

## FF SPECIFIC

I16
RADIO_MLB_FF

50_WLAN_A_1
50_WLAN_G_1
50_UAT_WLAN_5G_EAST
50_UAT_WLAN_2G_EAST
50_UAT_WLAN_5G_WEST
50_UAT2_M
PP_VDD_MAIN

50_UAT_WLAN_2G_WEST_PLEXER
50_UUAT_LB_MLB_NORTH
50_UAT_MB_HB_SOUTH
50_UAT_LB_MLB_SOUTH
50_UAT1_WEST
50_UAT1_TUNER
PP3V0_TRISTAR_ANT_PROX
PP1V8_SDRAM
BB_TO_UAT_SCLK
BB_TO_UAT_DATA
BUFFER_GPO1
BB_TO_LAT_ANT_SCLK
BB_TO_LAT_ANT_SDATA

P2MM-NSM SM PP5304 ROOM=UAT_DEBUG
P2MM-NSM SM PP5301 ROOM=UAT_DEBUG
P2MM-NSM SM PP5302 ROOM=UAT_DEBUG
P2MM-NSM SM PP5303 ROOM=UAT_DEBUG

## NFC

I10
STOCKHOLM_MLB

PP_VDD_MAIN
PP1V8_SDRAM

PMU_TO_NFC_EN
BB_TO_NFC_CLK
NFC_TO_BB_CLK_REQ
AP_TO_NFC_FW_DWLD_REQ
AP_TO_NFC_DEV_WAKE
NFC_TO_PMU_HOST_WAKE

UART_AP_TO_NFC_TXD
UART_NFC_TO_AP_RXD
UART_AP_TO_NFC_RTS_L
UART_NFC_TO_AP_CTS_L

NFC_SWP
SE2_READY
SE2_PWR_REQ
SE2_PRESENT

NFC_SWP_MUX
ICEFALL_LDO_ENABLE

Apple Inc. Schematics

SYNC_MASTER=david-copy
SYNC_DATE=03/01/2016

PAGE TITLE
CELL,WIFI,NFC

Apple Inc.

DRAWING NUMBER 051-00482
SIZE D
REVISION 8.0.0
BRANCH
PAGE 53 OF 53
SHEET 53 OF 81

NOTICE OF PROPRIETARY PROPERTY:
THE INFORMATION CONTAINED HEREIN IS THE PROPRIETARY PROPERTY OF APPLE INC.
THE POSESSOR AGREES TO THE FOLLOWING:
I TO MAINTAIN THIS DOCUMENT IN CONFIDENCE
II NOT TO REPRODUCE OR COPY IT
III NOT TO REVEAL OR PUBLISH IT IN WHOLE OR PART
IV ALL RIGHTS RESERVED

1. ALL RESISTANCE VALUES ARE IN OHMS, 0.1 WATT +/- 5%.
2. ALL CAPACITANCE VALUES ARE IN MICROFARADS.
3. ALL CRYSTALS & OSCILLATOR VALUES ARE IN HERTZ.

| REV | ECN | DESCRIPTION OF REVISION | CK APPD / DATE |
|---|---|---|---|
| 8 | 0006532879 | ENGINEERING RELEASED | 2016-07-06 |

# STOCKHOLM_MLB
# JUNE 22, 2016

2 PP_VDD_MAIN
2 IN PP1V8_SDRAM

2 IN PMU_TO_NFC_EN
2 OUT NFC_TO_PMU_HOST_WAKE
2 IN AP_TO_NFC_DEV_WAKE
2 IN AP_TO_NFC_FW_DWLD_REQ
2 OUT NFC_TO_BB_CLK_REQ
2 IN BB_TO_NFC_CLK

2 IN UART_AP_TO_NFC_TXD
2 OUT UART_NFC_TO_AP_RXD
2 IN UART_AP_TO_NFC_RTS_L
2 OUT UART_NFC_TO_AP_CTS_L

2 IO NFC_SWP
2 IN SE2_READY
2 IN SE2_PWR_REQ
2 IN SE2_PRESENT

2 OUT NFC_SWP_MUX

2 OUT ICEFALL_LDO_ENABLE

## ALTERNATES

| PART NUMBER | ALTERNATE FOR PART NUMBER | REFERENCE DESIGNATOR(S) | DESCRIPTION | BOM OPTION |
|---|---|---|---|---|
| 132S0436 | 132S0400 | C7504_RF | 0.22UF 20% 6.3V 01005 | |

| PART# | QTY | DESCRIPTION | REFERENCE DESIGNATOR(S) | CRITICAL | BOM OPTION |
|---|---|---|---|---|---|
| 353S01007 | 1 | ONSEMI,IC LOAD SWITCH, WLCSP4 | NFCSW_RF | CRITICAL | |

## BOM OPTIONS

| PART# | QTY | DESCRIPTION | REFERENCE DESIGNATOR(S) | BOM OPTION |
|---|---|---|---|---|
| 131S0883 | 1 | 220PF, 0201 2% 50V | C7514_RF | D101 |
| 131S00055 | 1 | 22PF, 0201 2% 50V | C7512_RF | D101 |
| 131S00117 | 1 | 120PF, 0201 2% 50V | C7518_RF | D101 |
| 131S00026 | 1 | 820PF, 0201 2% 50V | C7516_RF | D101 |
| 131S0883 | 1 | 220PF, 0201 2% 50V | C7514_RF | D10_JP |
| 131S00055 | 1 | 22PF, 0201 2% 50V | C7512_RF | D10_JP |
| 131S00019 | 1 | 150PF, 0201 2% 50V | C7518_RF | D10_JP |
| 131S0825 | 1 | 560PF, 0201 2% 50V | C7516_RF | D10_JP |
| 131S0883 | 1 | 220PF, 0201 2% 50V | C7514_RF | D10_ROW |
| 131S00055 | 1 | 22PF, 0201 2% 50V | C7512_RF | D10_ROW |
| 131S00117 | 1 | 120PF, 0201 2% 50V | C7518_RF | D10_ROW |
| 131S00026 | 1 | 820PF, 0201 2% 50V | C7516_RF | D10_ROW |

| PART# | QTY | DESCRIPTION | REFERENCE DESIGNATOR(S) | BOM OPTION |
|---|---|---|---|---|
| 131S00081 | 1 | 270PF, 0201 2% 25V | C7514_RF | D111 |
| 131S00118 | 1 | 180PF, 0201 2% 50V | C7518_RF | D111 |
| 131S00033 | 1 | 680PF, 0201 2% 50V | C7516_RF | D111 |
| 131S00081 | 1 | 270PF, 0201 2% 25V | C7514_RF | D11_JP |
| 131S0731 | 1 | 100PF, 0201 2% 50V | C7518_RF | D11_JP |
| 131S00033 | 1 | 680PF, 0201 2% 50V | C7516_RF | D11_JP |
| 131S00081 | 1 | 270PF, 0201 2% 25V | C7514_RF | D11_ROW |
| 131S00118 | 1 | 180PF, 0201 2% 50V | C7518_RF | D11_ROW |
| 131S00033 | 1 | 680PF, 0201 2% 50V | C7516_RF | D11_ROW |

NotebookSchematics.com
在维 苹果笔记本维修资料



DRAWING TITLE: SCH,MLB,D11

Apple Inc.

DRAWING NUMBER: 051-00482 SIZE: D
REVISION: 8.0.0
BRANCH:
PAGE: 1 OF 75
SHEET: 54 OF 81

NOTICE OF PROPRIETARY PROPERTY:
THE INFORMATION CONTAINED HEREIN IS THE PROPRIETARY PROPERTY OF APPLE INC.
THE POSESSOR AGREES TO THE FOLLOWING:
I TO MAINTAIN THIS DOCUMENT IN CONFIDENCE
II NOT TO REPRODUCE OR COPY IT
III NOT TO REVEAL OR PUBLISH IT IN WHOLE OR PART
IV ALL RIGHTS RESERVED

# STOCKHOLM

## NFC CONTROLLER

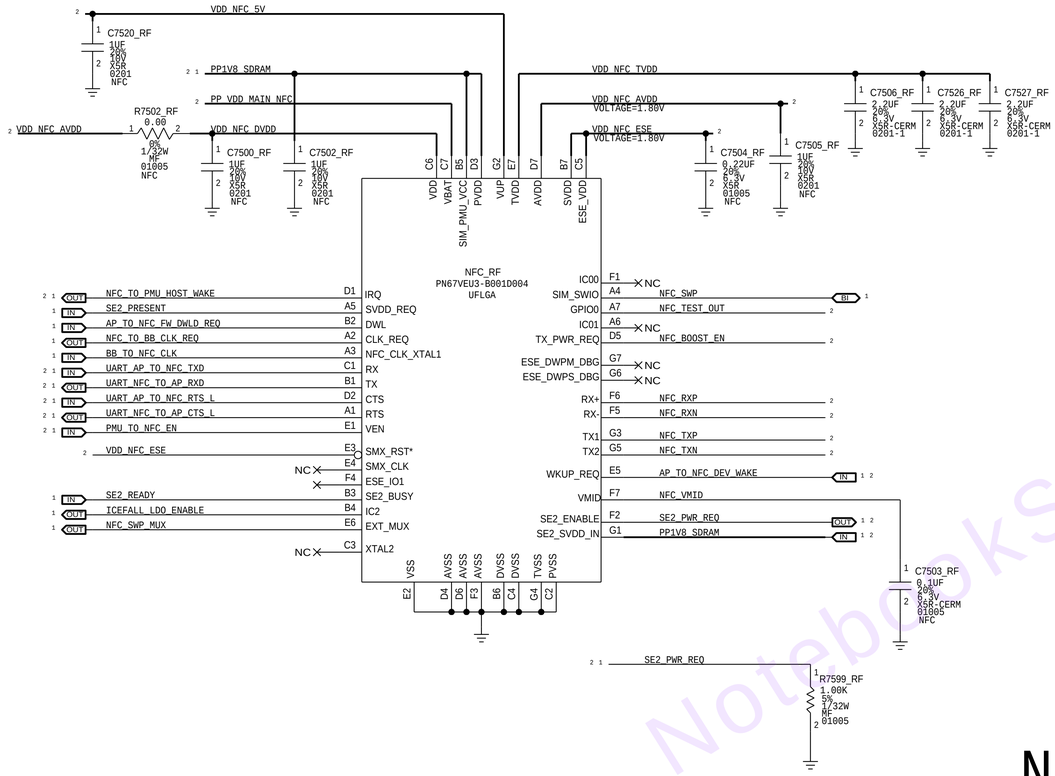


## 5V BOOSTER

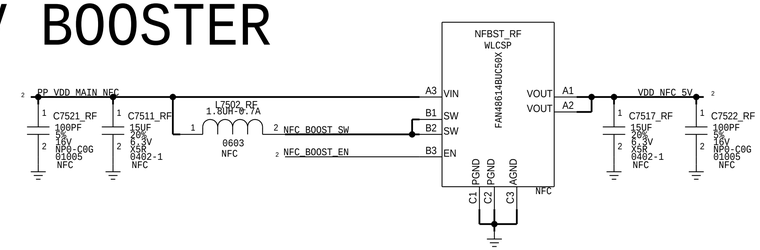


## NFC FRONT END

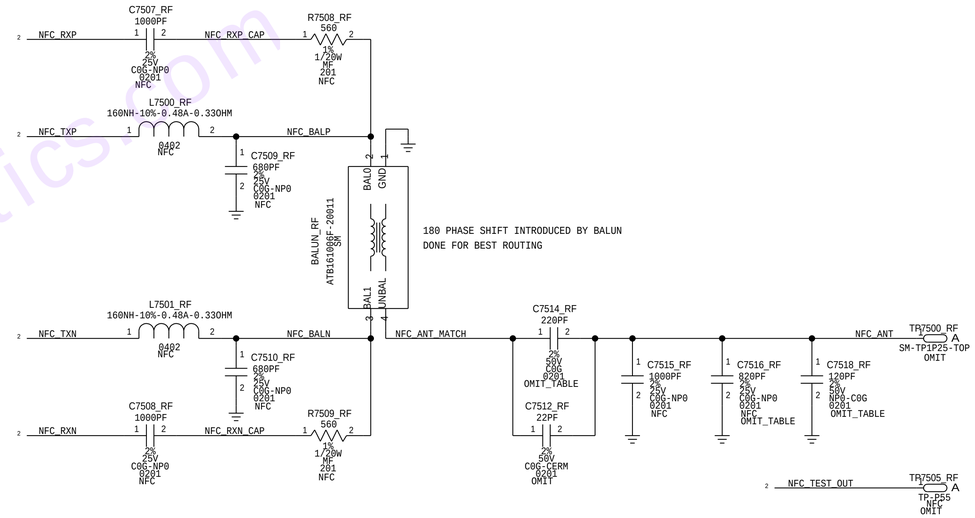


## NFC LOAD SWITCH

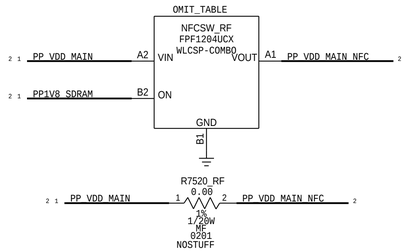


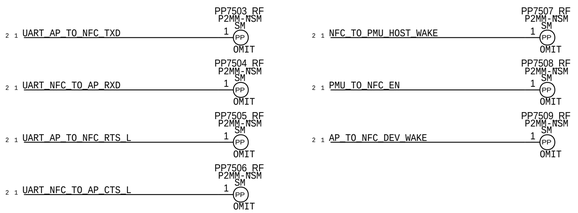


NotebookSchematics.com

PAGE TITLE: NFC

Apple Inc.

DRAWING NUMBER: 051-00482 SIZE: D

REVISION: 8.0.0

BRANCH:

PAGE: 75 OF 75

SHEET: 55 OF 81

NOTICE OF PROPRIETARY PROPERTY:
THE INFORMATION CONTAINED HEREIN IS THE PROPRIETARY PROPERTY OF APPLE INC.
THE POSESSOR AGREES TO THE FOLLOWING:
I TO MAINTAIN THIS DOCUMENT IN CONFIDENCE
II NOT TO REPRODUCE OR COPY IT
III NOT TO REVEAL OR PUBLISH IT IN WHOLE OR PART
IV ALL RIGHTS RESERVED

1. ALL RESISTANCE VALUES ARE IN OHMS, 0.1 WATT +/- 5%.
2. ALL CAPACITANCE VALUES ARE IN MICROFARADS.
3. ALL CRYSTALS & OSCILLATOR VALUES ARE IN HERTZ.

| REV | ECN | DESCRIPTION OF REVISION | CK APPD / DATE |
|---|---|---|---|
| 8 | 0006532879 | ENGINEERING RELEASED | 2016-07-06 |

# D11 RADIO_MLB_FF
# FEB 05, 2016

| PDF PAGE | CONTENTS |
|---|---|
| 2 | METROCIRC |

## LMBRF:

| | | | | | |
|---|---|---|---|---|---|
| 152S2001 | 1 | 2.4NH,600MA,0201 | L8008_RF | CRITICAL | LMBRF |
| 152S0983 | 1 | 6.8NH,2%,1.5A,0.055OHM,0402 | L8009_RF | CRITICAL | LMBRF |

## NOLMBRF:

| PART# | QTY | DESCRIPTION | REFERENCE DESIGNATOR(S) | CRITICAL | BOM OPTION |
|---|---|---|---|---|---|
| 152S2024 | 1 | 1.4NH,1.1A,0201 | L8008_RF | CRITICAL | NOLMBRF |
| 152S00610 | 1 | 3.6NH,2%,1.7A,0.0450HM,0402 | L8009_RF | CRITICAL | NOLMBRF |

NotebookSchematics.com

?

DRAWING TITLE: SCH,MLB,D11

Apple Inc.

DRAWING NUMBER: 051-00482 SIZE: D
REVISION: 8.0.0
BRANCH:
PAGE: 1 OF 3
SHEET: 56 OF 81

NOTICE OF PROPRIETARY PROPERTY:
THE INFORMATION CONTAINED HEREIN IS THE PROPRIETARY PROPERTY OF APPLE INC.
THE POSESSOR AGREES TO THE FOLLOWING:
I TO MAINTAIN THIS DOCUMENT IN CONFIDENCE
II NOT TO REPRODUCE OR COPY IT
III NOT TO REVEAL OR PUBLISH IT IN WHOLE OR PART
IV ALL RIGHTS RESERVED

# METROCIRC

## D11 NORTH-SOUTH METROCIRC
## 339S00147

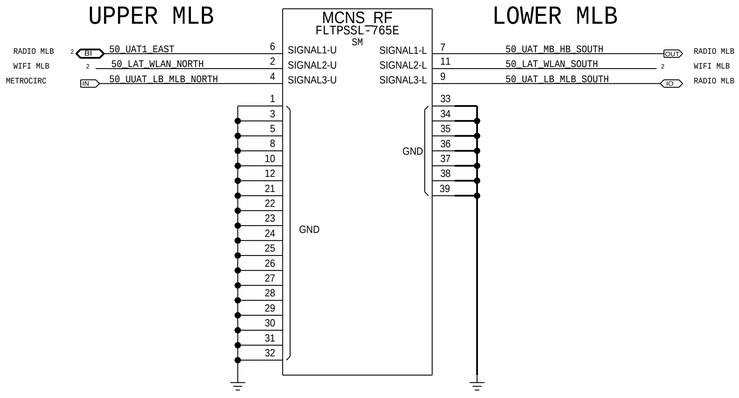


## D11 EAST-WEST METROCIRC
## 339S00146

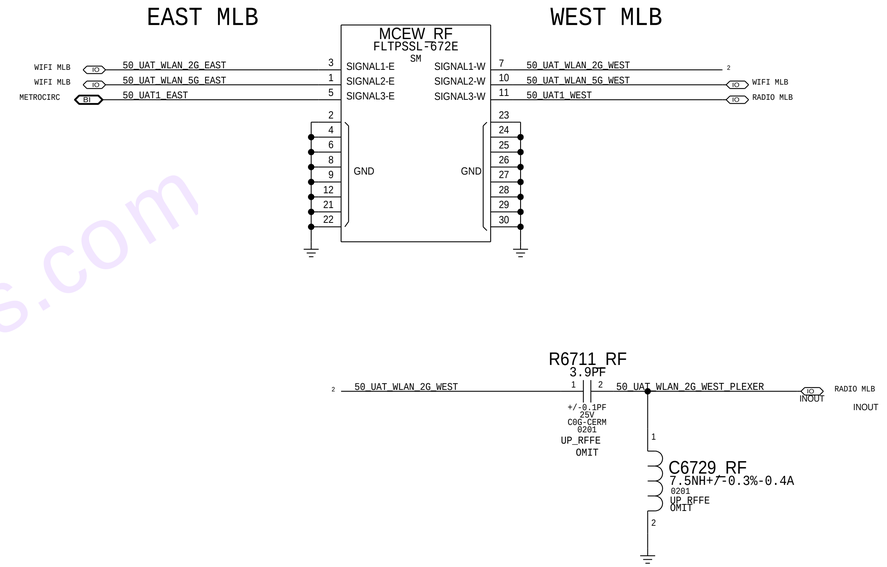


## WIFI LOWER ANTENNA FEED

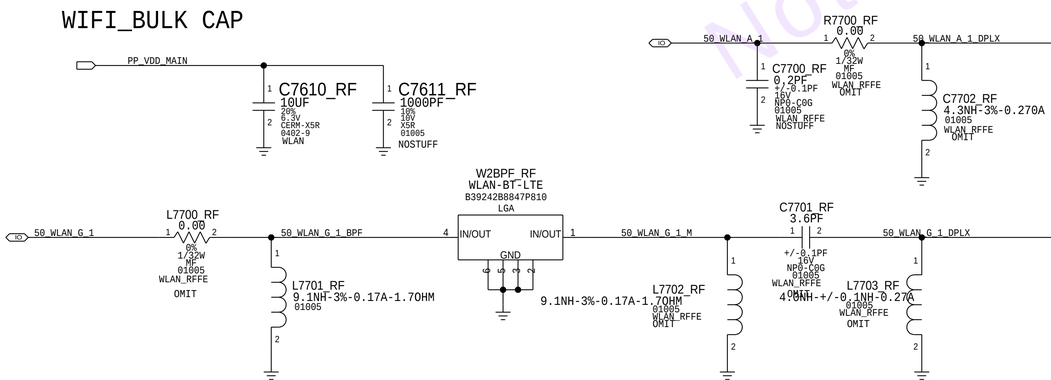


## COAX

THROUGH METROCIRC

NotebookSchematics.com

| | |
|---|---|
| PAGE TITLE | METROCIRC [2] |
| Apple Inc. | DRAWING NUMBER 051-00482 SIZE D |
| | REVISION 8.0.0 |
| | BRANCH |
| | PAGE 2 OF 3 |
| | SHEET 57 OF 81 |

NOTICE OF PROPRIETARY PROPERTY:
THE INFORMATION CONTAINED HEREIN IS THE PROPRIETARY PROPERTY OF APPLE INC.
THE POSESSOR AGREES TO THE FOLLOWING:
I TO MAINTAIN THIS DOCUMENT IN CONFIDENCE
II NOT TO REPRODUCE OR COPY IT
III NOT TO REVEAL OR PUBLISH IT IN WHOLE OR PART
IV ALL RIGHTS RESERVED

# UAT TUNER FLEX

PLEASE CONTACT ANTENNA (MATT MOW)
FOR ANY COMPONENT CHANGE.

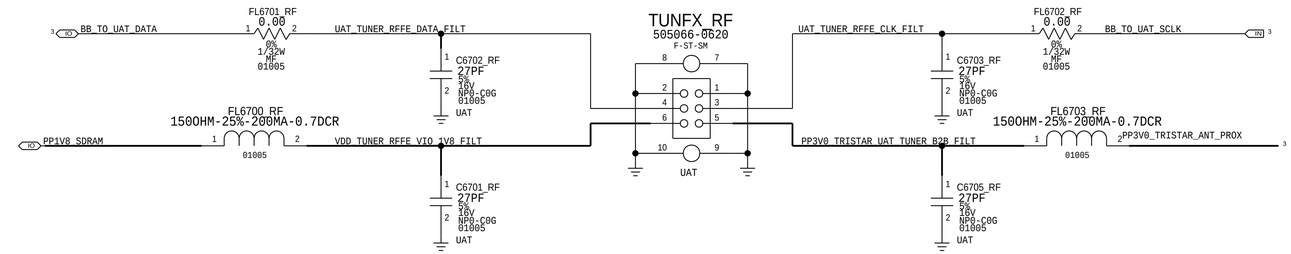


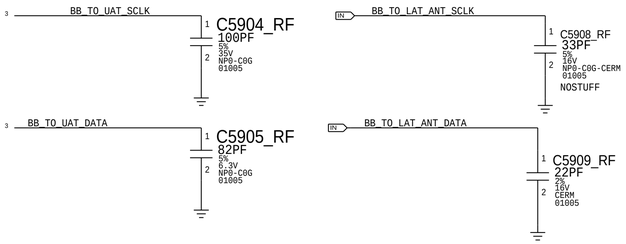


# ALT UAT1 GND

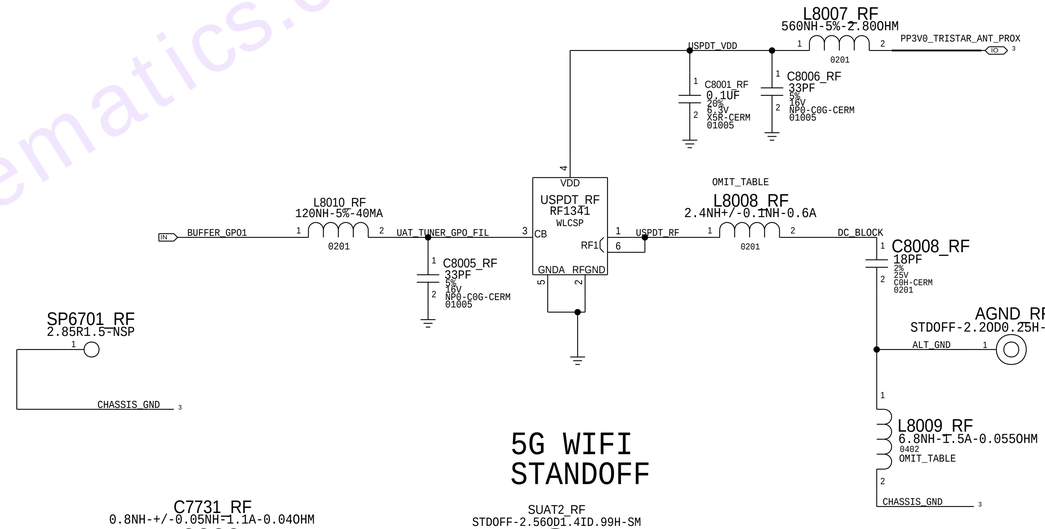


# LB/MLB/GNSS/MB/HB STANDOFF

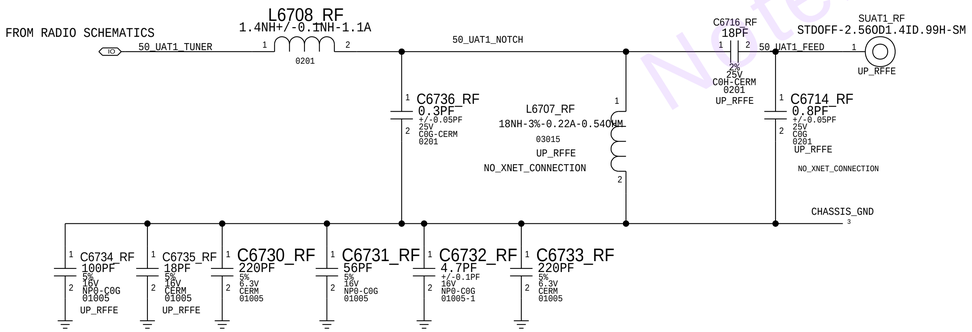


# 5G WIFI STANDOFF

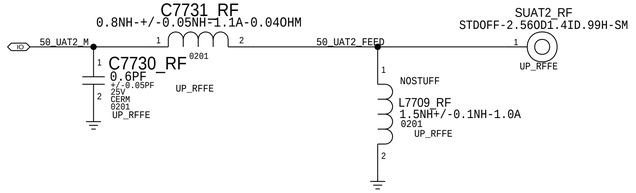


NotebookSchematics.com

PAGE TITLE
UAT MATCH AND TUNER [3]

Apple Inc.

DRAWING NUMBER 051-00482
SIZE D
REVISION 8.0.0
BRANCH
PAGE 3 OF 3
SHEET 58 OF 81

NOTICE OF PROPRIETARY PROPERTY:
THE INFORMATION CONTAINED HEREIN IS THE PROPRIETARY PROPERTY OF APPLE INC.
THE POSESSOR AGREES TO THE FOLLOWING:
I TO MAINTAIN THIS DOCUMENT IN CONFIDENCE
II NOT TO REPRODUCE OR COPY IT
III NOT TO REVEAL OR PUBLISH IT IN WHOLE OR PART
IV ALL RIGHTS RESERVED

1. ALL RESISTANCE VALUES ARE IN OHMS, 0.1 WATT +/- 5%.
2. ALL CAPACITANCE VALUES ARE IN MICROFARADS.
3. ALL CRYSTALS & OSCILLATOR VALUES ARE IN HERTZ.

| REV | ECN | DESCRIPTION OF REVISION | CK APPD / DATE |
|---|---|---|---|
| 8 | 0006532879 | ENGINEERING RELEASED | 2016-07-06 |

# D1X WIFI_MLB (PERENNIAL)
# FEBRUARY 1, 2016

| PDF PAGE | CSA PAGE | CONTENTS |
|---|---|---|
| 2 | 76 | PERENNIAL |
| 3 | 77 | WIFI FRONT-END |

## POWER

2 IN PP_VDD_MAIN
2 IN PP1V8_SDRAM

## CLOCKS

2 IN PMUGPIO_TO_WLAN_CLK32K

## CONTROL

2 IN PMU_TO_WLAN_REG_ON
2 IN PMU_TO_BT_REG_ON
2 OUT BT_TO_PMU_HOST_WAKE
2 IN AP_TO_BT_WAKE

## WLAN PCIE

2 IN 90_PCIE_AP_TO_WLAN_REFCLK_P
2 IN 90_PCIE_AP_TO_WLAN_REFCLK_N
2 IN 90_PCIE_AP_TO_WLAN_TXD_P
2 IN 90_PCIE_AP_TO_WLAN_TXD_N
2 OUT 90_PCIE_WLAN_TO_AP_RXD_P
2 OUT 90_PCIE_WLAN_TO_AP_RXD_N
2 IN PCIE_AP_TO_WLAN_RESET_L
2 IO PCIE_WLAN_BI_AP_CLKREQ_L
2 OUT WLAN_TO_PMU_HOST_WAKE
2 IN AP_TO_WLAN_DEVICE_WAKE

## WLAN UART

2 OUT UART_WLAN_TO_AP_RXD
2 IN UART_AP_TO_WLAN_TXD
2 OUT UART_WLAN_TO_AP_CTS_L
2 IN UART_AP_TO_WLAN_RTS_L

## BLUETOOTH UART

2 IN UART_AP_TO_BT_TXD
2 OUT UART_BT_TO_AP_RXD
2 IN UART_AP_TO_BT_RTS_L
2 OUT UART_BT_TO_AP_CTS_L

## AOP

2 IN AOP_TO_WLAN_CONTEXT_A
2 IN AOP_TO_WLAN_CONTEXT_B

## AUDIO

2 IN I2S_AP_TO_BT_BCLK
2 IN I2S_AP_TO_BT_LRCLK
2 OUT I2S_BT_TO_AP_DIN
2 IN I2S_AP_TO_BT_DOUT

## COEX

2 IN UART_BB_TO_WLAN_COEX
2 OUT UART_WLAN_TO_BB_COEX

## ANTENNA

3 IO 50_UAT_WLAN_5G_WEST
3 IO 50_UAT_WLAN_2G_EAST
3 IO 50_UAT_WLAN_5G_EAST
2 IO 50_WLAN_G_1
2 IO 50_WLAN_A_1
3 IO 50_UAT2_M

## BOM OPTIONS:

### D10_JP:

| PART# | QTY | DESCRIPTION | REFERENCE DESIGNATOR(S) | CRITICAL | BOM OPTION |
|---|---|---|---|---|---|
| 131S0648 | 1 | CAP,CER,0.3PF,+/-0.05,01005 | C7705_RF | CRITICAL | D10_JP |
| 152S00029 | 1 | IND,1.1NH,UH-Q,01005 | R7703_RF | CRITICAL | D10_JP |
| 131S0893 | 1 | CAP,CER,0.2PF,+/-0.05,01005 | C7706_RF | CRITICAL | D10_JP |
| 117S0161 | 1 | RES,MF,0 OHM,1/32W,01005 | R7711_RF | CRITICAL | D10_JP |
| 117S0161 | 1 | RES,MF,0 OHM,1/32W,01005 | R7702_RF | CRITICAL | D10_JP |
| 152S1980 | 1 | IND,1.0NH,UH-Q,01005 | R7704_RF | CRITICAL | D10_JP |
| 131S0404 | 1 | CAP,3.9PF,+/-1.0PF,01005 | R6711_RF | CRITICAL | D10_JP |
| 152S2061 | 1 | IND,7.5NH,UH-Q,01005 | C6729_RF | CRITICAL | D10_JP |
| 117S0161 | 1 | RES,MF,0 OHM,1/32W,01005 | R7700_RF | CRITICAL | D10_JP |
| 152S2043 | 1 | IND,6.2NH,UH-Q,01005 | C7702_RF | CRITICAL | D10_JP |
| 152S1998 | 1 TRUE | IND, 0.8NH,UH-Q,01005 | L7700_RF | CRITICAL | D10_JP |
| 152S2043 | 1 | IND,6.2NH,UH-Q,01005 | L7701_RF | CRITICAL | D10_JP |
| 152S1853 | 1 | IND,9.1NH,UH-Q,01005 | L7702_RF | CRITICAL | D10_JP |
| 131S0401 | 1 | CAP,3.6PF,+/-0.1PF,01005 | C7701_RF | CRITICAL | D10_JP |
| 152S00038 | 1 | IND,4.0NH,+/-0.1NH,UH-Q,01005 | L7703_RF | CRITICAL | D10_JP |
| 117S0161 | 1 | RES,MF,0 OHM,1/32W,01005 | R7701_RF | CRITICAL | D10_JP |

NOSTUFF:C7729_RF,C7711_RF,C7709_RF,C7710_RF, C7707_RF, C7708_RF
C7700_RF, C7703_RF,C7704_RF

### D10_ROW:

| PART# | QTY | DESCRIPTION | REFERENCE DESIGNATOR(S) | CRITICAL | BOM OPTION |
|---|---|---|---|---|---|
| 131S0648 | 1 | CAP,CER,0.3PF,+/-0.05,01005 | C7705_RF | CRITICAL | D10_ROW |
| 152S00029 | 1 | IND,1.1NH,UH-Q,01005 | R7703_RF | CRITICAL | D10_ROW |
| 131S0893 | 1 | CAP,CER,0.2PF,+/-0.05,01005 | C7706_RF | CRITICAL | D10_ROW |
| 117S0161 | TRUE | RES,MF,0 OHM,1/32W,01005 | R7711_RF | CRITICAL | D10_ROW |
| 117S0161 | TRUE | RES,MF,0 OHM,1/32W,01005 | R7702_RF | CRITICAL | D10_ROW |
| 152S1988 | TRUE | IND,2.4NH,UH-Q,01005 | R7704_RF | CRITICAL | D10_ROW |
| 117S0161 | TRUE | RES,MF,0 OHM,1/32W,01005 | R6711_RF | CRITICAL | D10_ROW |
| 152S1853 | TRUE | IND,9.1NH,UH-Q,01005 | C6729_RF | CRITICAL | D10_ROW |
| 117S0161 | TRUE | RES,MF,0 OHM,1/32W,01005 | R7700_RF | CRITICAL | D10_ROW |
| 152S2043 | 1 | IND,6.2NH,UH-Q,01005 | C7702_RF | CRITICAL | D10_ROW |
| 152S1998 | 1 TRUE | IND, 0.8NH,UH-Q,01005 | L7700_RF | CRITICAL | D10_ROW |
| 152S2043 | 1 | IND,6.2NH,UH-Q,01005 | L7701_RF | CRITICAL | D10_ROW |
| 152S1853 | 1 | IND,9.1NH,UH-Q,01005 | L7702_RF | CRITICAL | D10_ROW |
| 131S0401 | 1 | CAP,3.6PF,+/-0.1PF,01005 | C7701_RF | CRITICAL | D10_ROW |
| 152S00038 | TRUE | IND,4.0NH,+/-0.1NH,UH-Q,01005 | L7703_RF | CRITICAL | D10_ROW |
| 117S0161 | 1 | RES,MF,0 OHM,1/32W,01005 | R7701_RF | CRITICAL | D10_ROW |

NOSTUFF:C7729_RF,C7711_RF,C7709_RF,C7710_RF, C7707_RF, C7708_RF
C7700_RF, C7703_RF,C7704_RF

### D101_WIFI:

| PART# | QTY | DESCRIPTION | REFERENCE DESIGNATOR(S) | CRITICAL | BOM OPTION |
|---|---|---|---|---|---|
| 131S0648 | 1 | CAP,CER,0.3PF,+/-0.05,01005 | C7705_RF | CRITICAL | D101 |
| 152S00029 | 1 | IND,1.1NH,UH-Q,01005 | R7703_RF | CRITICAL | D101 |
| 131S0893 | 1 | CAP,CER,0.2PF,+/-0.05,01005 | C7706_RF | CRITICAL | D101 |
| 117S0161 | 1 | RES,MF,0 OHM,1/32W,01005 | R7711_RF | CRITICAL | D101 |
| 117S0161 | 1 | RES,MF,0 OHM,1/32W,01005 | R7702_RF | CRITICAL | D101 |
| 152S1988 | TRUE 1 | IND,2.4NH,UH-Q,01005 | R7704_RF | CRITICAL | D101 |
| 131S0648 | TRUE 1 | CAP,CER,0.3PF,+/-0.05PF,01005 | C7708_RF | CRITICAL | D101 |
| 118S0724 | TRUE 1 | RES,MF, 0 OHM,1/20W, 0201 | R6711_RF | CRITICAL | D101 |
| 152S2054 | TRUE 1 | IND,9.1NH,UH-Q,0201 | C6729_RF | CRITICAL | D101 |
| 117S0161 | 1 | RES,MF,0 OHM,1/32W,01005 | R7700_RF | CRITICAL | D101 |
| 152S2043 | TRUE 1 | IND,6.2NH,UH-Q,01005 | C7702_RF | CRITICAL | D101 |
| 152S1998 | 1 TRUE | IND, 0.8NH,UH-Q,01005 | L7700_RF | CRITICAL | D101 |
| 152S2043 | 1 | IND,6.2NH,UH-Q,01005 | L7701_RF | CRITICAL | D101 |
| 152S1853 | 1 | IND,9.1NH,UH-Q,01005 | L7702_RF | CRITICAL | D101 |
| 131S0401 | 1 | CAP,3.6PF,+/-0.1PF,01005 | C7701_RF | CRITICAL | D101 |
| 152S00038 | 1 | IND,4.0NH,+/-0.1NH,UH-Q,01005 | L7703_RF | CRITICAL | D101 |
| 117S0161 | 1 | RES,MF,0 OHM,1/32W,01005 | R7701_RF | CRITICAL | D101 |

NOSTUFF: C7729_RF,C7711_RF,C7709_RF,C7710_RF, C7707_RF
C7700_RF, C7703_RF,C7704_RF

### D11_JP:

| PART# | QTY | DESCRIPTION | REFERENCE DESIGNATOR(S) | CRITICAL | BOM OPTION |
|---|---|---|---|---|---|
| 152S00273 | TRUE | IND,0.6NH,UH-Q,01005 | R7703_RF | CRITICAL | D11_JP |
| 152S1976 | TRUE | IND,0.7NH,UH-Q,01005 | R7711_RF | CRITICAL | D11_JP |
| 131S0400 | TRUE | CAP,CER,3.5PF+/-0.1,01005 | R7702_RF | CRITICAL | D11_JP |
| 152S1986 | TRUE | IND,FILM,2.2NH,UH-Q,01005 | R7704_RF | CRITICAL | D11_JP |
| 131S0648 | 1 | CAP,CER,0.3PF,+/-0.05PF,01005 | C7708_RF | CRITICAL | D11_JP |
| 131S0593 | TRUE | CAP,3.9PF,+/-1.0PF,0201,HI-Q | R6711_RF | CRITICAL | D11_JP |
| 152S2055 | TRUE | IND,7.5NH,UH-Q,0201 | C6729_RF | CRITICAL | D11_JP |
| 131S0893 | TRUE | CAP,CER,0.2PF,+/-0.05PF,01005 | C7705_RF | CRITICAL | D11_JP |
| 131S0893 | TRUE | CAP,CER,0.2PF,+/-0.05PF,01005 | C7729_RF | CRITICAL | D11_JP |
| 131S0648 | TRUE TRUE | CAP,CER,0.3PF,+/-0.05PF,01005 | C7700_RF | CRITICAL | D11_JP |
| 152S1980 | TRUE | IND,1.0NH,+/-0.1NH,UH-Q,01005 | R7700_RF | CRITICAL | D11_JP |
| 131S0648 | TRUE | CAP,CER,0.3PF,+/-0.05PF,01005 | C7702_RF | CRITICAL | D11_JP |
| 131S0405 | 1 TRUE | CAP,CER,4.0PF,+/-0.1PF,01005 | R7701_RF | CRITICAL | D11_JP |
| 152S00273 | 1 TRUE | IND,0.6NH,+/-1NH,UH-Q,01005 | L7700_RF | CRITICAL | D11_JP |
| 152S1853 | 1 | IND,9.1NH,UH-Q,01005 | L7701_RF | CRITICAL | D11_JP |
| 152S1853 | 1 | IND,9.1NH,UH-Q,01005 | L7702_RF | CRITICAL | D11_JP |
| 117S0161 | 1 | RES,MF,0 OHM,1/32W,01005 | C7701_RF | CRITICAL | D11_JP |

NOSTUFF:C7706_RF, C7711_RF,C7709_RF,C7710_RF, C7707_RF
C7703_RF,C7704_RF,L7703_RF

### D11_ROW:

| PART# | QTY | DESCRIPTION | REFERENCE DESIGNATOR(S) | CRITICAL | BOM OPTION |
|---|---|---|---|---|---|
| 152S00273 | 1 | IND,0.6NH,UH-Q,01005 | R7703_RF | CRITICAL | D11_ROW |
| 152S1976 | 1 | IND,0.7NH,UH-Q,01005 | R7711_RF | CRITICAL | D11_ROW |
| 131S0400 | 1 | CAP,CER,3.5PF+/-0.1,01005 | R7702_RF | CRITICAL | D11_ROW |
| 152S1986 | TRUE 1 | IND,FILM,2.2NH,UH-Q,01005 | R7704_RF | CRITICAL | D11_ROW |
| 118S0724 | TRUE 1 | RES,MF,0 OHM,1/20W,0201 | R6711_RF | CRITICAL | D11_ROW |
| 152S2054 | TRUE 1 | IND,9.1NH,UH-Q,0201 | C6729_RF | CRITICAL | D11_ROW |
| 131S0893 | 1 | CAP,CER,0.2PF,+/-0.05PF,01005 | C7705_RF | CRITICAL | D11_ROW |
| 131S0893 | TRUE | CAP,CER,0.2PF,+/-0.05PF,01005 | C7729_RF | CRITICAL | D11_ROW |
| 131S0648 | TRUE TRUE | CAP,CER,0.3PF,+/-0.05PF,01005 | C7700_RF | CRITICAL | D11_ROW |
| 152S1980 | TRUE | IND,1.0NH,+/-0.1NH,UH-Q,01005 | R7700_RF | CRITICAL | D11_ROW |
| 131S0648 | TRUE | CAP,CER,0.3PF,+/-0.05PF,01005 | C7702_RF | CRITICAL | D11_ROW |
| 131S0405 | 1 TRUE | CAP,CER,4.0PF,+/-0.1PF,01005 | R7701_RF | CRITICAL | D11_ROW |
| 152S00273 | 1 TRUE | IND,0.6NH,+/-1NH,UH-Q,01005 | L7700_RF | CRITICAL | D11_ROW |
| 152S1853 | 1 | IND,9.1NH,UH-Q,01005 | L7701_RF | CRITICAL | D11_ROW |
| 152S1853 | 1 | IND,9.1NH,UH-Q,01005 | L7702_RF | CRITICAL | D11_ROW |
| 117S0161 | 1 | RES,MF,0 OHM,1/32W,01005 | C7701_RF | CRITICAL | D11_ROW |

NOSTUFF:C7706_RF, C7711_RF,C7709_RF,C7710_RF, C7707_RF, C7708_RF
C7703_RF,C7704_RF,L7703_RF

### D111_WIFI:

| PART# | QTY | DESCRIPTION | REFERENCE DESIGNATOR(S) | CRITICAL | BOM OPTION |
|---|---|---|---|---|---|
| 152S00273 | 1 | IND,0.6NH,UH-Q,01005 | R7703_RF | CRITICAL | D111 |
| 152S1976 | 1 | IND,0.7NH,UH-Q,01005 | R7711_RF | CRITICAL | D111 |
| 131S0400 | 1 | CAP,CER,3.5PF+/-0.1,01005 | R7702_RF | CRITICAL | D111 |
| 152S1986 | TRUE 1 | IND,FILM,2.2NH,UH-Q,01005 | R7704_RF | CRITICAL | D111 |
| 118S0724 | TRUE 1 | RES,MF, 0 OHM,1/20W, 0201 | R6711_RF | CRITICAL | D111 |
| 152S2054 | TRUE 1 | IND,9.1NH,UH-Q,0201 | C6729_RF | CRITICAL | D111 |
| 131S0893 | 1 | CAP,CER,0.2PF,+/-0.05PF,01005 | C7705_RF | CRITICAL | D111 |
| 131S0893 | TRUE | CAP,CER,0.2PF,+/-0.05PF,01005 | C7729_RF | CRITICAL | D111 |
| 131S0648 | TRUE TRUE | CAP,CER,0.3PF,+/-0.05PF,01005 | C7700_RF | CRITICAL | D111 |
| 152S1980 | TRUE | IND,1.0NH,+/-0.1NH,UH-Q,01005 | R7700_RF | CRITICAL | D111 |
| 131S0648 | TRUE | CAP,CER,0.3PF,+/-0.05PF,01005 | C7702_RF | CRITICAL | D111 |
| 131S0405 | 1 TRUE | CAP,CER,4.0PF,+/-0.1PF,01005 | R7701_RF | CRITICAL | D111 |
| 152S00273 | 1 TRUE | IND,0.6NH,+/-1NH,UH-Q,01005 | L7700_RF | CRITICAL | D111 |
| 152S1853 | 1 | IND,9.1NH,UH-Q,01005 | L7701_RF | CRITICAL | D111 |
| 152S1853 | 1 | IND,9.1NH,UH-Q,01005 | L7702_RF | CRITICAL | D111 |
| 117S0161 | 1 | RES,MF,0 OHM,1/32W,01005 | C7701_RF | CRITICAL | D111 |

NOSTUFF:C7706_RF, C7711_RF,C7709_RF,C7710_RF, C7707_RF, C7708_RF
C7703_RF,C7704_RF,L7703_RF

WIFI_MLB SCHEMATIC

| | |
|---|---|
| DRAWING TITLE | SCH,MLB,D11 |
| Apple Inc. | DRAWING NUMBER 051-00482 · SIZE D |
| | REVISION 8.0.0 |
| | BRANCH |
| | PAGE 1 OF 77 |
| | SHEET 59 OF 81 |

NOTICE OF PROPRIETARY PROPERTY:
THE INFORMATION CONTAINED HEREIN IS THE PROPRIETARY PROPERTY OF APPLE INC.
THE POSESSOR AGREES TO THE FOLLOWING:
I TO MAINTAIN THIS DOCUMENT IN CONFIDENCE
II NOT TO REPRODUCE OR COPY IT
III NOT TO REVEAL OR PUBLISH IT IN WHOLE OR PART
IV ALL RIGHTS RESERVED

CONFIDENTIAL AND PROPRIETARY APPLE SYSTEM DESIGN. FOR REFERENCE PURPOSE ONLY - NOT A CHANGE REQUEST

# WIFI/BT

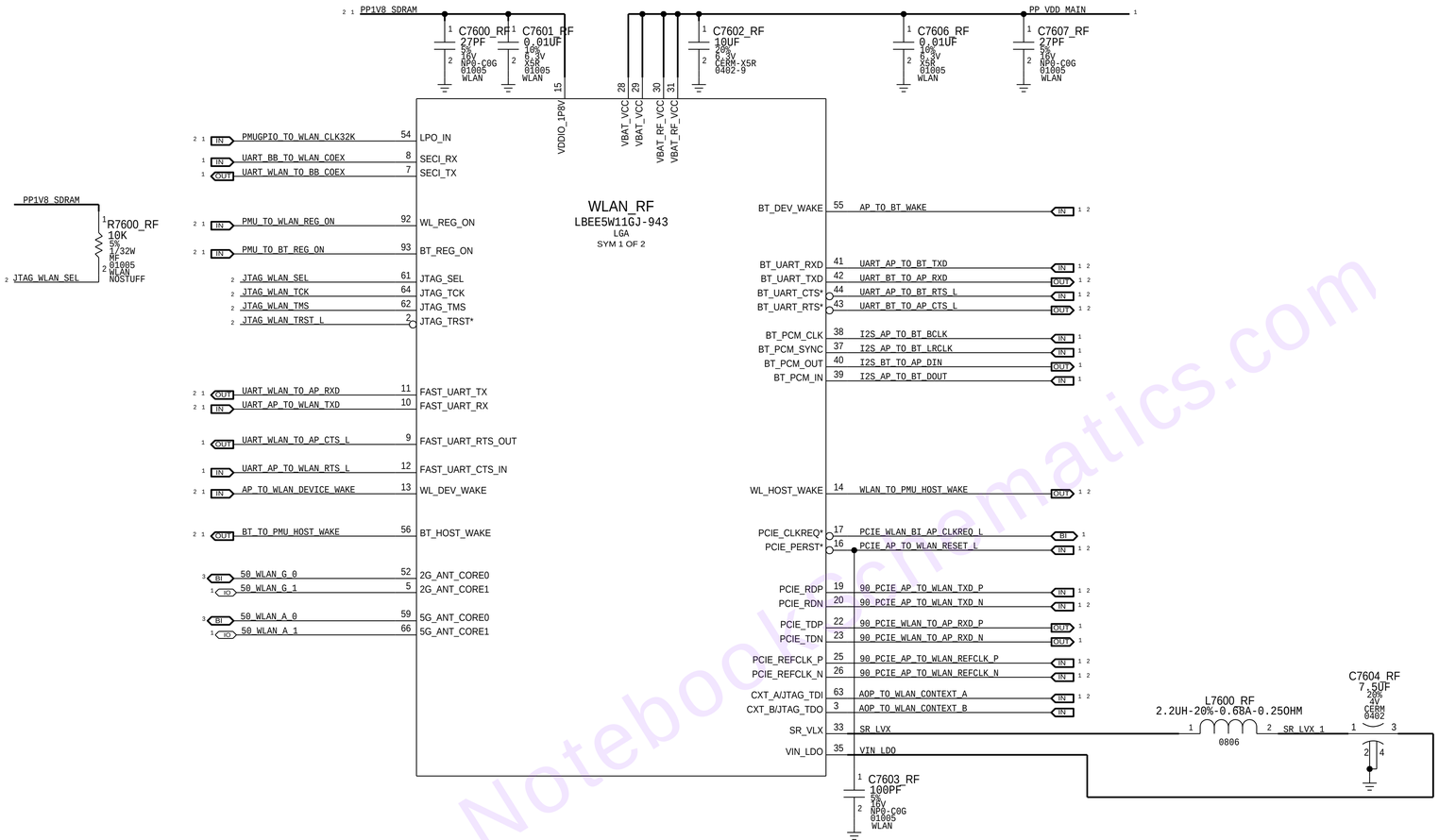


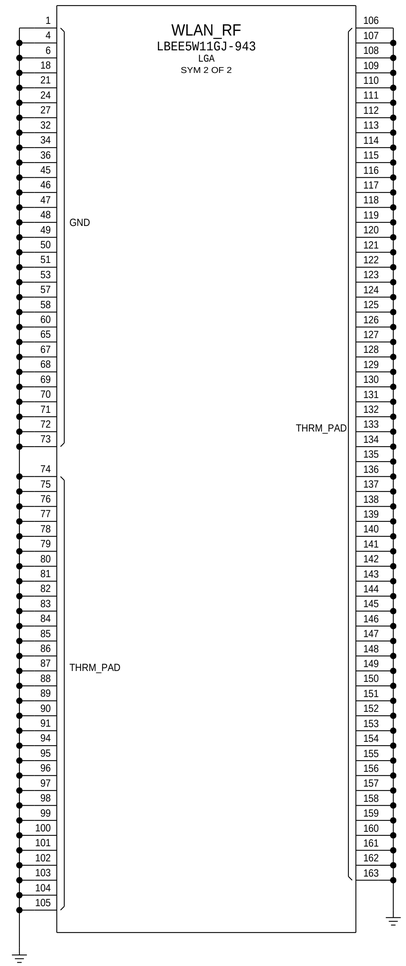


| PART NUMBER | ALTERNATE FOR PART NUMBER | BOM OPTION | REF DES | COMMENTS: |
|---|---|---|---|---|
| 339S00201 | 339S00199 | ALTERNATE | WLAN_RF | ALT WIFI/BT MODULE |

PP7600_RF P2MM-NSM OMIT SM — AOP_TO_WLAN_CONTEXT_A — TDI
PP7601_RF P2MM-NSM OMIT SM — AOP_TO_WLAN_CONTEXT_B — TDO
PP7603_RF P2MM-NSM OMIT SM — UART_WLAN_TO_AP_RXD
PP7604_RF P2MM-NSM OMIT SM — UART_AP_TO_WLAN_TXD
PP7605_RF P2MM-NSM OMIT SM — JTAG_WLAN_TCK
PP7606_RF P2MM-NSM OMIT SM — JTAG_WLAN_TMS
PP7607_RF P2MM-NSM OMIT SM — JTAG_WLAN_TRST_L
PP7608_RF P2MM-NSM OMIT SM — AP_TO_WLAN_DEVICE_WAKE
PP7609_RF P2MM-NSM OMIT SM — BT_TO_PMU_HOST_WAKE
PP7610_RF P2MM-NSM OMIT SM — PMUGPIO_TO_WLAN_CLK32K
PP7611_RF P2MM-NSM OMIT SM — WLAN_TO_PMU_HOST_WAKE
PP7612_RF P2MM-NSM OMIT SM — 90_PCIE_AP_TO_WLAN_REFCLK_P
PP7613_RF P2MM-NSM OMIT SM — 90_PCIE_AP_TO_WLAN_REFCLK_N
PP7614_RF P2MM-NSM OMIT SM — 90_PCIE_AP_TO_WLAN_TXD_P
PP7615_RF P2MM-NSM OMIT SM — 90_PCIE_AP_TO_WLAN_TXD_N
PP7616_RF P2MM-NSM OMIT SM — PCIE_AP_TO_WLAN_RESET_L
PP7617_RF P2MM-NSM OMIT SM — JTAG_WLAN_SEL
PP7618_RF P2MM-NSM OMIT SM — PMU_TO_WLAN_REG_ON
PP7619_RF P2MM-NSM OMIT SM — PMU_TO_BT_REG_ON
PP7620_RF P2MM-NSM OMIT SM — UART_AP_TO_BT_TXD
PP7621_RF P2MM-NSM OMIT SM — UART_BT_TO_AP_RXD
PP7622_RF P2MM-NSM OMIT SM — UART_AP_TO_BT_RTS_L
PP7623_RF P2MM-NSM OMIT SM — UART_BT_TO_AP_CTS_L
PP7624_RF P2MM-NSM OMIT SM — AP_TO_BT_WAKE

SYNC_MASTER=WIFI
SYNC_DATE=01/30/2014

PAGE TITLE
PERENNIAL

Apple Inc.

DRAWING NUMBER 051-00482
SIZE D
REVISION 8.0.0
BRANCH
PAGE 76 OF 77
SHEET 60 OF 81

NOTICE OF PROPRIETARY PROPERTY:
THE INFORMATION CONTAINED HEREIN IS THE PROPRIETARY PROPERTY OF APPLE INC.
THE POSESSOR AGREES TO THE FOLLOWING:
I TO MAINTAIN THIS DOCUMENT IN CONFIDENCE
II NOT TO REPRODUCE OR COPY IT
III NOT TO REVEAL OR PUBLISH IT IN WHOLE OR PART
IV ALL RIGHTS RESERVED

Notebook Schematics.com

# WIFI UPPER ANTENNA FEEDS

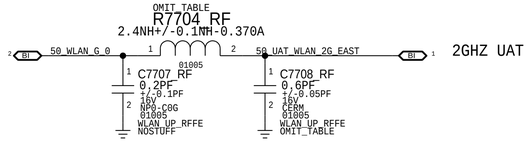


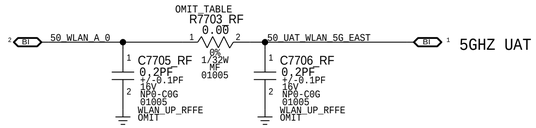


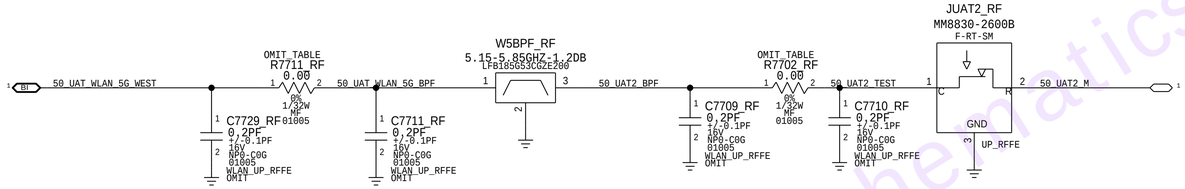


NotebookSchematics.com

PAGE TITLE: WIFI FRONT-END [77]

Apple Inc.

DRAWING NUMBER: 051-00482 | SIZE: D

REVISION: 8.0.0

BRANCH:

PAGE: 77 OF 77

SHEET: 61 OF 81

NOTICE OF PROPRIETARY PROPERTY:

THE INFORMATION CONTAINED HEREIN IS THE PROPRIETARY PROPERTY OF APPLE INC.
THE POSESSOR AGREES TO THE FOLLOWING:
I TO MAINTAIN THIS DOCUMENT IN CONFIDENCE
II NOT TO REPRODUCE OR COPY IT
III NOT TO REVEAL OR PUBLISH IT IN WHOLE OR PART
IV ALL RIGHTS RESERVED

81 ICEFALL, SIM, DEBUG_CONN

1. ALL RESISTANCE VALUES ARE IN OHMS, 0.1 WATT +/- 5%.
2. ALL CAPACITANCE VALUES ARE IN MICROFARADS.
3. ALL CRYSTALS & OSCILLATOR VALUES ARE IN HERTZ.

| REV | ECN | DESCRIPTION OF REVISION | CK APPD / DATE |
|---|---|---|---|
| 8 | 0006532879 | ENGINEERING RELEASED | 2016-07-06 |

# MAV16 RADIO_MLB

LAST_MODIFICATION=Wed Jun 29 12:06:01 2016


| PAGE | CSA | CONTENTS | SYNC | DATE |
|---|---|---|---|---|
| 62 | 1 | page1 | <SYNC_MASTER1> | <SYNC_DATE1> |
| 63 | 2 | BOM_OMIT_TABLE | <SYNC_MASTER2> | <SYNC_DATE2> |
| 64 | 3 | PMU: CONTROL AND CLOCKS | <SYNC_MASTER3> | <SYNC_DATE3> |
| 65 | 4 | PMU: SWITCHERS AND LDOS | <SYNC_MASTER4> | <SYNC_DATE4> |
| 66 | 5 | BASEBAND: POWER2 | <SYNC_MASTER5> | <SYNC_DATE5> |
| 67 | 6 | BASEBAND: CONTROL | | |
| 68 | 7 | BASEBAND GPIOS | | |
| 69 | 8 | TRANSCEIVER0/1: POWER | | |
| 70 | 9 | TRANSCEIVER0/1: TX PORTS | | |
| 71 | 10 | TRANSCEIVER0/1: PRX PORTS | | |
| 72 | 11 | RECEIVE MATCHING | | |
| 73 | 12 | LOWER ANTENNA & COUPLERS | | |
| 74 | 13 | DIVERSITY RECEIVE ASM'S | | |
| 75 | 14 | DIVERSITY RECEIVE LNA'S | | |
| 76 | 15 | UPPER ANTENNA FEEDS | | |
| 77 | 16 | PMU: ET MODULATOR | | |
| 78 | 17 | TEST POINTS & BOOT CONFIG | | |
| 79 | 18 | TDD TRANSMIT | | |
| 80 | 19 | FDD TRANSMIT | | |
| | 20 | | | |
| | 21 | | | |
| | 22 | | | |
| | 23 | | | |
| | 24 | | | |
| | 25 | | | |
| | 26 | | | |
| | 27 | | | <SYNC_DATE27> |
| | 28 | | | |
| | 29 | | | |
| | 30 | | | <SYNC_DATE30> |


page1

## SCH: 951-00964
## BOM: 939-00826

## ALTERNATES

| PART NUMBER | ALTERNATE FOR PART NUMBER | BOM OPTION | REF DES | COMMENTS: |
|---|---|---|---|---|
| 197S0565 | 197S0593 | ALTERNATE | Y5501_RF | 19P2 MHZ XTAL |
| 197S0598 | 197S0593 | ALTERNATE | Y5501_RF | 19P2 MHZ XTAL |
| 138S00101 | 138S00095 | ALTERNATE | ALL | TRANSITION CAP |
| 335S00013 | 335S0894 | ALTERNATE | EPROM_RF | IC EEPROM |
| 353S00253 | 353S00321 | ALTERNATE | SWPMX_RF | IC SWITCH SPDT |
| 155S00235 | 155S00234 | ALTERNATE | UPPDI_RF | NOLMBRF |

ALL:C5616_RF-C5618_RF,C5632_RF-C5634_RF

# AP CONNECTIONS

## POWER

20 16 4 3 IN PP_VDD_MAIN

IN PP_VDD_BOOST = PP_VDD_BOOST 4 20
20 7 IN PP1V8_SDRAM MAKE_BASE=TRUE

## AMUX

4 OUT BBPMU_TO_PMU_AMUX1
4 OUT BBPMU_TO_PMU_AMUX2
4 OUT BBPMU_TO_PMU_AMUX3

## DEBUG

20 6 IN SWD_AP_TO_MANY_SWCLK
20 6 IO SWD_AOP_BI_BB_SWDIO
20 17 3 IN PMU_TO_BB_USB_VBUS_DETECT
20 17 6 IO 90_USB_BB_DATA_P
20 17 6 IO 90_USB_BB_DATA_N

## BB CONTROL

20 17 3 IN AP_TO_BBPMU_RADIO_ON_L
17 3 IN PMU_TO_BBPMU_RESET_L
20 3 IN AP_TO_BB_RESET_L
17 7 OUT BB_TO_AP_RESET_DETECT_L
17 7 OUT BB_TO_STROBE_DRIVER_GSM_BURST_IND
7 IN AP_TO_BB_IPC_GPIO1
17 7 IN AP_TO_BB_TIME_MARK
17 7 IN AP_TO_BB_COREDUMP
3 IN LCM_TO_MANY_BSYNC
7 IN AP_TO_BB_MESA_ON

## ANTENNA

15 IO 50_UAT_WLAN_2G_WEST_PLEXER
14 IO 50_UAT1_WEST
12 IO 50_UAT_LB_MLB_SOUTH
12 IO 50_UAT_MB_HB_SOUTH
14 IO 50_UAT_LB_MLB_NORTH

## PCIE

17 6 IN 90_PCIE_AP_TO_BB_REFCLK_P
17 6 IN 90_PCIE_AP_TO_BB_REFCLK_N
6 IN 90_PCIE_AP_TO_BB_TXD_P
6 IN 90_PCIE_AP_TO_BB_TXD_N
6 OUT 90_PCIE_BB_TO_AP_RXD_P
6 90_PCIE_BB_TO_AP_RXD_N
7 3 IN PCIE_AP_TO_BB_RESET_L
7 IO PCIE_BB_BI_AP_CLKREQ_L
17 7 OUT BB_TO_PMU_PCIE_HOST_WAKE_L

## AOP

7 IN UART_AOP_TO_BB_TXD
17 7 OUT UART_BB_TO_AOP_RXD

## AUDIO

7 IN I2S_BB_TO_AP_BCLK
7 IN I2S_BB_TO_AP_LRCLK
7 IN I2S_AP_TO_BB_DOUT
7 OUT I2S_BB_TO_AP_DIN

## WLAN

20 17 7 IN UART_BB_TO_WLAN_COEX
20 17 7 OUT UART_WLAN_TO_BB_COEX

## NFC

20 IN NFC_SWP
20 17 IN NFC_SWP_MUX
20 17 OUT SE2_READY
20 17 IN AP_TO_ICEFALL_FW_DWLD_REQ
20 17 IN SE2_PWR_REQ
17 3 IN NFC_TO_BB_CLK_REQ
17 3 OUT BB_TO_NFC_CLK
20 OUT SE2_PRESENT
20 17 IN ICEFALL_LDO_ENABLE

## TUNER

OUT BB_TO_UAT_SCLK = BB_TO_UAT_SCLK 7 14
IO BB_TO_UAT_DATA = BB_TO_UAT_DATA 7 14
MAKE_BASE=TRUE

15 IO 50_UAT1_TUNER

7 OUT BUFFER_GPO1
7 OUT BUFFER_GPO2

## DOCK

MAKE_BASE=TRUE
OUT BB_TO_LAT_ANT_SCLK = BB_TO_LAT_ANT_SCLK 7 17
IO BB_TO_LAT_ANT_DATA = BB_TO_LAT_ANT_DATA 7 17
MAKE_BASE=TRUE

7 OUT BB_TO_LAT_GPO1
7 OUT BB_TO_LAT_GPO2
7 OUT BB_TO_LAT_GPO3

page1

| | |
|---|---|
| DRAWING TITLE | SCH,MLB,D11 |
| Apple Inc. | DRAWING NUMBER 051-00482 |
| SIZE | D |
| REVISION | 8.0.0 |
| BRANCH | |
| PAGE | 1 OF 72 |
| SHEET | 62 OF 81 |


NOTICE OF PROPRIETARY PROPERTY:
THE INFORMATION CONTAINED HEREIN IS THE PROPRIETARY PROPERTY OF APPLE INC.
THE POSESSOR AGREES TO THE FOLLOWING:
I TO MAINTAIN THIS DOCUMENT IN CONFIDENCE
II NOT TO REPRODUCE OR COPY IT
III NOT TO REVEAL OR PUBLISH IT IN WHOLE OR PART
IV ALL RIGHTS RESERVED


NotebookSchematics.com

# BOM OPTIONS:

## LMBRF:

| PART# | QTY | DESCRIPTION | REFERENCE DESIGNATOR(S) | CRITICAL | BOM OPTION |
|---|---|---|---|---|---|
| 353S00723 | 1 | MLB PAD | MLBPA_RF | CRITICAL | LMBRF |
| 117S0002 | 1 | MLB PAD LAT OUTPUT MATCH | R7105_RF | CRITICAL | LMBRF |
| 152S2042 | 1 | MLB PAD UAT OUTPUT MATCH | R7106_RF | CRITICAL | LMBRF |
| 353S00627 | 1 | MLB LNA | MLBLN_RF | CRITICAL | LMBRF |
| 117S0002 | 1 | MLB LNA OUTPUT MATCH | R6710_RF | CRITICAL | LMBRF |
| 155S00139 | 1 | PENTAPLEXER | PPLXR_RF | CRITICAL | LMBRF |
| 118S0643 | 1 | RES,MF,4.99K OHM,01005 | R7506_RF | CRITICAL | LMBRF |
| 155S00193 | 1 | FLTR,DIPLEXER,LB-MB-HB,DPX,SHIELD,0805 | UATDI_RF | CRITICAL | LMBRF |
| 155S00158 | 1 | FLTR,DIPLEXER,LB-MB/HB,MIRROR,0805 | UPPDI_RF | CRITICAL | LMBRF |
| 337S00284 | 1 | IC,SECURE ELEMENT,BCM20211,WLBGA25 | SE2_RF | CRITICAL | LMBRF |
| 138S0739 | 1 | CAP,1UF,0201 | C7201_RF | CRITICAL | LMBRF |
| 138S0739 | 1 | CAP,1UF,0201 | C7528_RF | CRITICAL | LMBRF |
| 132S0316 | 1 | CAP,0.1UF,01005 | C7501_RF | CRITICAL | LMBRF |
| 138S0739 | 1 | CAP,1UF,0201 | C7523_RF | CRITICAL | LMBRF |
| 138S0739 | 1 | CAP,1UF,0201 | C7524_RF | CRITICAL | LMBRF |
| 138S00032 | 1 | CAP,2.2UF,0201 | C7529_RF | CRITICAL | LMBRF |
| 138S00032 | 1 | CAP,2.2UF,0201 | C7530_RF | CRITICAL | LMBRF |
| 131S0217 | 1 | CAP,100PF,01005 | C7531_RF | CRITICAL | LMBRF |
| 118S0627 | 1 | RES,10KOHM,01005 | R7512_RF | CRITICAL | LMBRF |
| 353S00026 | 1 | LDO,BGA,2X2 | SE2LDO_RF | CRITICAL | LMBRF |
| 131S0630 | 1 | CAP,CER,NPO/COG,27PF,2%,16V,01005 | C6345_RF | CRITICAL | LMBRF |
| 131S0341 | 1 | CAP,CER,COG,3.0PF,+/-0.05,25V,0201,HI-Q | C6348_RF | CRITICAL | LMBRF |
| 152S2006 | 1 | IND,FILM,6.2NH,3%,400MA,UH-Q,0201 | L6322_RF | CRITICAL | LMBRF |
| 131S0630 | 1 | CAP,CER,NPO/COG,27PF,2%,16V,01005 | C6315_RF | CRITICAL | LMBRF |
| 152S2006 | 1 | IND,FILM,6.2NH,3%,400MA,UH-Q,0201 | L6305_RF | CRITICAL | LMBRF |
| 131S0341 | 1 | CAP,CER,COG,3.0PF,+/-0.05PF,25V,0201,HI-Q | C6306_RF | CRITICAL | LMBRF |
| 131S0630 | 1 | CAP,CER,NPO/COG,27PF,2%,16V,01005 | C6106_RF | CRITICAL | LMBRF |
| 152S2051 | 1 | IND,1.3NH,1.1A,0201 | R6404_RF | CRITICAL | LMBRF |
| 152S2000 | 1 | IND,2.0NH,600MA,0201 | R7104_RF | CRITICAL | LMBRF |
| 131S00001 | 1 | CAP,CER,0.1PF,25V,0201 | C7119_RF | CRITICAL | LMBRF |
| 118S0724 | 1 | RES,MF,0OHM,1/20W,0201 | R6703_RF | CRITICAL | LMBRF |
| 118S0724 | 1 | RES,MF,0OHM,1/20W,0201 | R6708_RF | CRITICAL | LMBRF |
| 131S0363 | 1 | CAP,CER,C0G,HQ,0.6PF,+/-0.05PF,25V,0201 | C7123_RF | CRITICAL | LMBRF |
| 152S2002 | 1 | IND,2.7NH,+/-0.1NH,600MA,0201,UH-Q | R6605_RF | CRITICAL | LMBRF |
| 131S0337 | 1 | CAP,1.5PF,+/-0.05PF,25V,0201,HQ | C6610_RF | CRITICAL | LMBRF |
| 118S0724 | 1 | RES,MF,0OHM,1/20W,0201 | R6606_RF | CRITICAL | LMBRF |
| 131S0275 | 1 | CAP,CER,C0G,0.3PF,+/-0.1PF,25V,0201,HQ | C6416_RF | CRITICAL | LMBRF |
| 118S0608 | 1 | RES,MF,1K OHM,1%,1/32W,01005 | R5911_RF | CRITICAL | LMBRF |
| 152S1356 | 1 | IND,18NH,3%,250MA,HI-Q,0201 | C6613_RF | CRITICAL | LMBRF |

## NOLMBRF:

| PART# | QTY | DESCRIPTION | REFERENCE DESIGNATOR(S) | CRITICAL | BOM OPTION |
|---|---|---|---|---|---|
| 131S0444 | 1 | DCS/PCS RX FILTER MATCH | R6301_RF | CRITICAL | NOLMBRF |
| 152S2020 | 1 | DCS/PCS RX FILTER MATCH | L6320_RF | CRITICAL | NOLMBRF |
| 155S00149 | 1 | DCS/PCS RX FILTER | GSMRX_RF | CRITICAL | NOLMBRF |
| 152S2005 | 1 | DCS/PCS RX MATCH (DCS) | L6310_RF | CRITICAL | NOLMBRF |
| 131S0319 | 1 | DCS/PCS RX MATCH (DCS) | C6332_RF | CRITICAL | NOLMBRF |
| 131S0630 | 1 | DCS/PCS RX MATCH (DCS) | C6340_RF | CRITICAL | NOLMBRF |
| 152S2005 | 1 | DCS/PCS RX MATCH (DCS) | L6319_RF | CRITICAL | NOLMBRF |
| 131S0385 | 1 | DCS/PCS RX MATCH (DCS) | C6333_RF | CRITICAL | NOLMBRF |
| 131S0630 | 1 | DCS/PCS RX MATCH (DCS) | C6341_RF | CRITICAL | NOLMBRF |
| 155S00163 | 1 | QUADPLEXER | PPLXR_RF | CRITICAL | NOLMBRF |
| 155S00199 | 1 | FLTR,DPX,PASS THRU,LB-MB-HB,SHLD,0805 | UATDI_RF | CRITICAL | NOLMBRF |
| 155S00234 | 1 | FLTR,DPX,PASS THRU,LB-MB-HB,UNSHLD,0805 | UPPDI_RF | CRITICAL | NOLMBRF |
| 118S0724 | 1 | RES,MF,0OHM,1/20W,0201 | R6404_RF | CRITICAL | NOLMBRF |
| 152S2044 | 1 | IND,2.2NH,+/-0.1NH,600MA,0201 | R7104_RF | CRITICAL | NOLMBRF |
| 152S00157 | 1 | 1.2NH,+/-0.05NH,1.1A,UH-Q,0201 | R6703_RF | CRITICAL | NOLMBRF |
| 131S0549 | 1 | 18PF,0201,25V | R6708_RF | CRITICAL | NOLMBRF |
| 131S0445 | 1 | CAP,CER,12PF,5%,25V,0201,HI-Q | R6606_RF | CRITICAL | NOLMBRF |

## D10 SPECIFIC:

| PART# | QTY | DESCRIPTION | REFERENCE DESIGNATOR(S) | CRITICAL | BOM OPTION |
|---|---|---|---|---|---|
| 131S0278 | 1 | CAP,CER,COG,1PF,+/-0.1PF,25V,0201,HI-Q | C7120_RF | CRITICAL | D10 |

## D11 SPECIFIC:

| PART# | QTY | DESCRIPTION | REFERENCE DESIGNATOR(S) | CRITICAL | BOM OPTION |
|---|---|---|---|---|---|
| 131S0425 | 1 | CAP,CER,COG,0.5PF,+/-0.05PF,25V,0201,HI-Q | C7120_RF | CRITICAL | D11 |

NotebookSchematics.com

# PMU: CONTROL AND CLOCKS

| HW_REV_ID | R5505 | R5501 | REVISION |
|---|---|---|---|
| 0.10V | 887K | 51.1K | DEV1 |
| 0.20V | 422K | 51.1K | DEV2 |
| 0.30V | 255K | 51.1K | DEV 2.1 |
| 0.40V | 180K | 51.1K | DEV 3 |
| 0.50V | 124K | 51.1K | T181 |
| 0.60V | 102K | 51.1K | PP/P1 |
| 0.70V | 82.5K | 51.1K | DEV4 |
| 0.80V | 63.4K | 51.1K | P2 |
| 0.90V | 51.1K | 51.1K | DEV5 |
| 1.00V | 51.1K | 63.4K | EVT |
| 1.10V | 51.1K | 82.5K | EVT DOE |
| 1.20V | 50.0K | 100K | EVT ALT/CARBON |
| 1.30V | 39.0K | 100K | DEV6 |
| 1.40V | 14.7K | 51.1K | CARRIER |
| 1.50V | 40.2K | 200K | DVT |
| 1.60V | 6.34K | 51.1K | PVT |

## RESET AND CONTROL: PMU

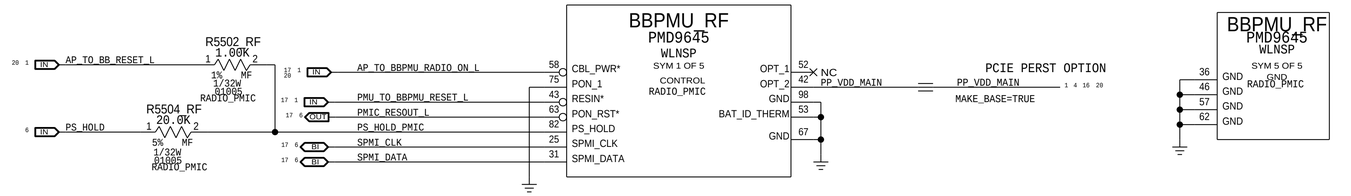


## MPPS AND GPIOS: PMU

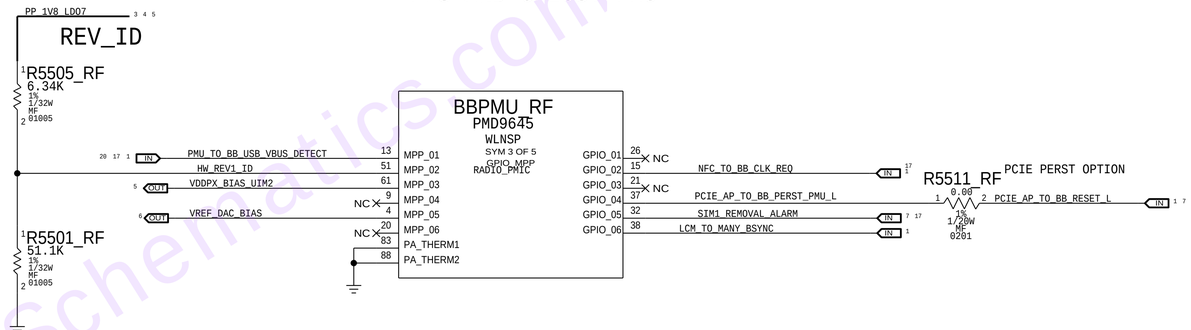


## XTAL AND CLOCK: PMU

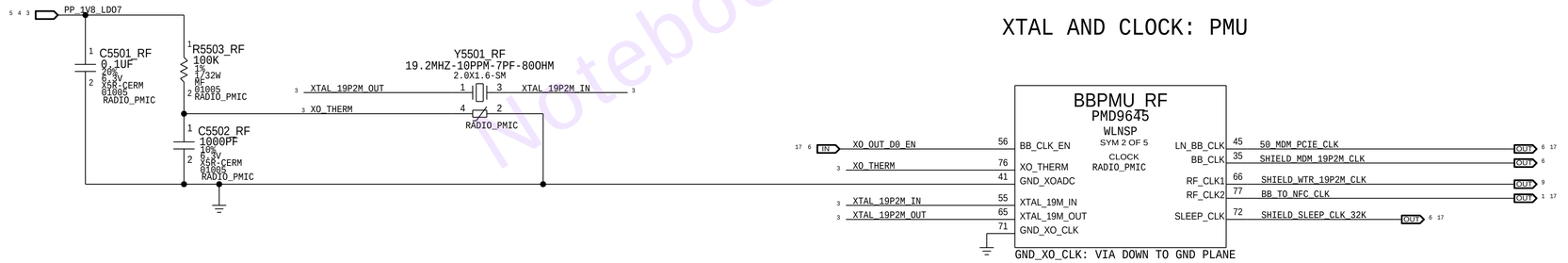


GND_XO_CLK: VIA DOWN TO GND PLANE

Notebookschematics.com

CONFIDENTIAL AND PROPRIETARY APPLE SYSTEM DESIGN. FOR REFERENCE PURPOSE ONLY - NOT A CHANGE REQUEST

SYNC_DATE=04/17/2015

PAGE TITLE
PAGE_TITLE=PMU: CONTROL AND CLOCKS

Apple Inc.

DRAWING NUMBER 051-00482 | SIZE D
REVISION 8.0.0
BRANCH
PAGE 55 OF 72
SHEET 64 OF 81

NOTICE OF PROPRIETARY PROPERTY:
THE INFORMATION CONTAINED HEREIN IS THE PROPRIETARY PROPERTY OF APPLE INC.
THE POSESSOR AGREES TO THE FOLLOWING:
I TO MAINTAIN THIS DOCUMENT IN CONFIDENCE
II NOT TO REPRODUCE OR COPY IT
III NOT TO REVEAL OR PUBLISH IT IN WHOLE OR PART
IV ALL RIGHTS RESERVED

# PMU: SWITCHERS AND LDOS

## SWITCHERS BULK CAPS

C5620_RF 15UF 20% 6.3V CERM 0402 RADIO_PMIC
C5621_RF 15UF 20% 6.3V CERM 0402 RADIO_PMIC
C5622_RF 15UF 20% 6.3V CERM 0402 RADIO_PMIC
C5623_RF 15UF 20% 6.3V CERM 0402 RADIO_PMIC
C5624_RF 15UF 20% 6.3V CERM 0402 RADIO_PMIC
C5625_RF 15UF 20% 6.3V CERM 0402 RADIO_PMIC

MAKE_BASE=TRUE
PP_VDD_MAIN
GND

## DESENSE CAPS

C5635_RF 100PF 5% 16V NP0-C0G 01005
C5636_RF 27PF 2% 16V CERM 01005

PLACE C5635 AND C5636 NEAR THE PMU

## BBPMU_RF

PMD9645
WLNSP
SYM 4 OF 5
POWER
RADIO_PMIC

| | | | |
|---|---|---|---|
| PP_VDD_MAIN | 5 | VDD_S1 | VREG_S1 10 |
| | 16 | VDD_S1 | VSW_S1 11 |
| GND | 6 | GND_S1 | VSW_S1 22 |
| | 17 | GND_S1 | VSW_S1 27 |
| | 28 | GND_S1 | |
| | 33 | GND_S1 | |
| PP_VDD_MAIN | 92 | VDD_S2 | VREG_S2 91 |
| | 103 | VDD_S2 | VSW_S2 97 |
| GND | 102 | GND_S2 | |
| PP_VDD_MAIN | 70 | VDD_S3 | VREG_S3 69 |
| GND | 49 | GND_S3 | VSW_S3 59 |
| | 54 | GND_S3 | VSW_S3 64 |
| PP_VDD_MAIN | 8 | VDD_S4 | VREG_S4 12 |
| GND | 1 | GND_S4 | VSW_S4 2 |
| | 7 | GND_S4 | |
| PP_VDD_MAIN | 94 | VDD_S5 | VREG_S5 87 |
| GND | 93 | GND_S5 | VSW_S5 99 |
| PP_1V225_SMPS2 | 86 | VDD_L1_2_16 | VREG_L1 80 |
| BBPMU_TO_PMU_AMUX2 | 44 | VDD_L3_4 | VREG_L2 81 |
| BBPMU_TO_PMU_AMUX3 | 14 | VDD_L5_6_15 | VREG_L3 39 |
| | 23 | VDD_L7_8 | VREG_L4_16 48 |
| | 89 | VDD_L9 | VREG_L5 19 |
| PP_VDD_BOOST | 90 | VIN_VPH1 | VREG_L6 3 |
| PP_VDD_MAIN | 47 | VIN_VPH2 | VREG_L7 18 |
| | 73 | VDD_OTP | VREG_L8 29 |
| MDM_VREF_LPDDR2 | 78 | VREF_DDR | VREG_L9 100 |
| AVDD_BYP | 74 | AVDD_BYP | VREG_L10 84 |
| REF_BYP | 79 | REF_BYP | VREG_L11 95 |
| | 68 | GND_REF | VREG_L12 85 |
| | 24 | VDD_XO_RF | VREG_L13 96 |
| | | | VREG_L14 101 |
| | | | VREG_L15 30 |
| | | | VREG_XO 34 VREG_XO |
| | | | GND_XO 40 VREG_XO_GND |
| | | | VREG_RF 60 VREG_RF_CLK |
| | | | GND_RF_CLK 50 VREG_RF_CLK_GND |

C5629_RF 0.47UF 10% 6.3V CERM-X5R 0201 AVDD_BYP_GND
C5601_RF 0.1UF 10% 6.3V CER-X5R 01005 RADIO_PMIC
R5601_RF 0.00 0% 1/32W MF 01005
XW5616_RF SHORT-10L-0.1MM-SM (OMIT)
XW5617_RF SHORT-10L-0.1MM-SM (OMIT)

PLACE XW CLOSE TO PMU
VIA XW DOWN TO THE GND PLANE

C5602_RF 1UF 20% 10V X5R 0201 RADIO_PMIC
C5603_RF 1UF 20% 10V X5R 0201 RADIO_PMIC
XW5614_RF SHORT-10L-0.1MM-SM (OMIT) XO_GND
XW5615_RF SHORT-10L-0.1MM-SM (OMIT) RF_CLK_GND

PLACE XW CLOSE TO PMU
VIA XW DOWN TO THE GND PLANE

L5601_RF 1UH-20%-0.054OHM-3.4A 2520 RADIO_PMIC
L5602_RF 2.2UH-20%-0.14OHM-1.6A 0806 RADIO_PMIC
L5603_RF 1.0UH-20%-2.7A-0.056OHM 0806 RADIO_PMIC
L5604_RF 2.2UH-20%-0.14OHM-1.6A 0806 RADIO_PMIC
L5605_RF 1.0UH-20%-2.7A-0.056OHM 0806 RADIO_PMIC

| | | | | |
|---|---|---|---|---|
| PP_VSW_S1 | C5614_RF 43UF 20% 4V X5R 0603 | MDM MODEM | BBPMU_TO_PMU_AMUX1 | 0.90V/2685MA |
| PP_VSW_S2 | C5615_RF 20UF 20% 6.3V CERM-X5R 0402 | XO SHUTDOWN: OFF<br>LOW VOLTAGE LDOS | PP_1V225_SMPS2 | 1.25V/693MA |
| | C5631_RF 20UF 20% 6.3V CERM-X5R 0402 | XO SHUTDOWN: ON | | |
| PP_VSW_S3 | C5616_RF 25UF 20% 6.3V X5R 0402 | MDM MEMORY, MDM USB<br>XO SHUTDOWN: ON | BBPMU_TO_PMU_AMUX2 | 1.16V/1951MA |
| | C5632_RF 25UF 20% 6.3V X5R 0402 | | | |
| PP_VSW_S4 | C5617_RF 25UF 20% 6.3V X5R 0402 | HIGH VOLTAGE LDOS<br>XO SHUTDOWN: ON | BBPMU_TO_PMU_AMUX3 | 1.85V/1241MA |
| | C5633_RF 25UF 20% 6.3V X5R 0402 | | | |
| PP_VSW_S5 | C5618_RF 25UF 20% 6.3V X5R 0402 | CORE<br>XO SHUTDOWN: ON | PP_1V0_SMPS5 | 1.01V/1059MA |
| | C5634_RF 25UF 20% 6.3V X5R 0402 | | | |
| | | MDM LOW VOLTAGE ANALOG<br>XO SHUTDOWN: OFF | PP_1V5_LDO1 | 1.23V/124MA |
| | | MDM EBI1, DDR CORE<br>XO SHUTDOWN: BYP | PP_1V2_LDO2 | 1.20V/569MA |
| | | MDM CORE<br>XO SHUTDOWN: OFF | PP_0V9_LDO3 | 1.00V/610MA |
| | | MDM PCIE<br>XO SHUTDOWN: BYP | PP_0V95_LDO4 | 1.00V/88MA |
| | | MDM HIGH VOLTAGE ANALOG<br>XO SHUTDOWN: ON | PP_1V7_LDO5 | 1.80V/52MA |
| | | MDM 1.8V I/O, DDR, SHARED 1.8V VOLTAGE RAIL<br>XO SHUTDOWN: BYP | PP_1V8_LDO6 | 1.80V/366MA |
| | | MDM PLL<br>XO SHUTDOWN: OFF | PP_1V8_LDO7 | 1.80V/15MA |
| | | MDM LOW VOLTAGE USB<br>XO SHUTDOWN: OFF | PP_1V8_LDO8 | 1.80V/133MA |
| | | MEMORY<br>XO SHUTDOWN: ON | PP_1V0_LDO9 | 1.11V/1253MA |
| | | MDM HIGH VOLTAGE USB<br>XO SHUTDOWN: OFF | PP_3V075_LDO10 | 3.20V/15MA |
| | | UIM1<br>XO SHUTDOWN: ON | VDD_SIM1 | 1.80V/60MA |
| | | FRONT END SUPPLY<br>XO SHUTDOWN: OFF | PP_2V7_LDO12 | 2.70V/62MA |
| | | UIM2<br>XO SHUTDOWN: OFF | VDD_SIM2 | 1.80V/60MA |
| | | GPS LNA<br>XO SHUTDOWN: OFF | PP_1V8_LDO14 | 2.70V/5MA |
| | | RFFE VIO<br>XO SHUTDOWN: BYP | PP_1V8_LDO15 | 1.80V/245MA |

C5626_RF 1UF 20% 10V X5R 0201 RADIO_PMIC
C5604_RF 10UF 20% 6.3V CERM-X5R 0402 RADIO_PMIC
C5627_RF 10UF 20% 6.3V CERM-X5R 0402 RADIO_PMIC
C5605_RF 1UF 20% 10V X5R 0201 RADIO_PMIC
C5609_RF 1UF 20% 10V X5R 0201 RADIO_PMIC
C5608_RF 4.7UF 20% 6.3V X5R-CERM1 402 RADIO_PMIC
C5607_RF 1UF 20% 10V X5R 0201 RADIO_PMIC
C5630_RF 20UF 20% 6.3V CERM-X5R 0402
C5610_RF 1UF 20% 10V X5R 0201 RADIO_PMIC
C5611_RF 1UF 20% 10V X5R 0201 RADIO_PMIC
C5628_RF 1UF 20% 10V X5R 0201 RADIO_PMIC
C5613_RF 1UF 20% 10V X5R 0201 RADIO_PMIC
C5612_RF 1UF 20% 10V X5R 0201 RADIO_PMIC

BBPMU_TO_PMU_AMUX1 MAKE_BASE=TRUE BBPMU_TO_PMU_AMUX1
BBPMU_TO_PMU_AMUX2 MAKE_BASE=TRUE BBPMU_TO_PMU_AMUX2
BBPMU_TO_PMU_AMUX3 MAKE_BASE=TRUE BBPMU_TO_PMU_AMUX3

Notebook Schematics.com

CONFIDENTIAL AND PROPRIETARY APPLE SYSTEM DESIGN. FOR REFERENCE PURPOSE ONLY - NOT A CHANGE REQUEST

SYNC_DATE=04/17/2015
PAGE TITLE
PAGE_TITLE=PMU: SWITCHERS AND LDOS
Apple Inc.
DRAWING NUMBER 051-00482
SIZE D
REVISION 8.0.0
BRANCH
PAGE 56 OF 72
SHEET 65 OF 81

NOTICE OF PROPRIETARY PROPERTY:
THE INFORMATION CONTAINED HEREIN IS THE PROPRIETARY PROPERTY OF APPLE INC.
THE POSESSOR AGREES TO THE FOLLOWING:
I TO MAINTAIN THIS DOCUMENT IN CONFIDENCE
II NOT TO REPRODUCE OR COPY IT
III NOT TO REVEAL OR PUBLISH IT IN WHOLE OR PART
IV ALL RIGHTS RESERVED

# BASEBAND: POWER

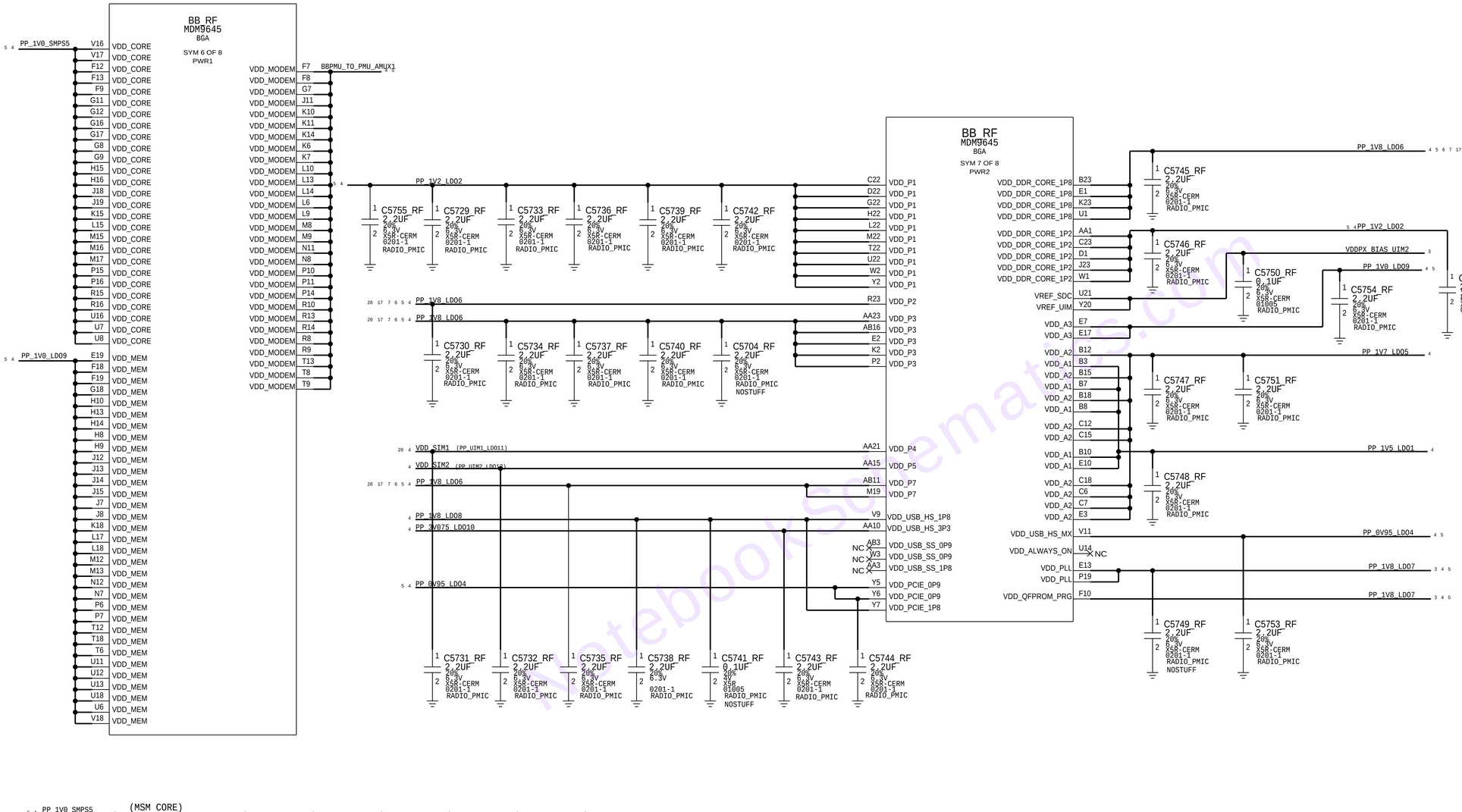


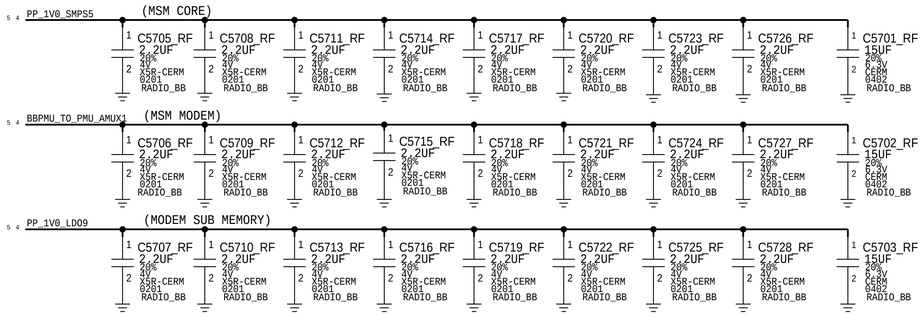


Notebook Schematics.com

CONFIDENTIAL AND PROPRIETARY APPLE SYSTEM DESIGN. FOR REFERENCE PURPOSE ONLY - NOT A CHANGE REQUEST

SYNC_DATE=04/17/2015

PAGE TITLE: PAGE_TITLE=BASEBAND: POWER2

Apple Inc.

DRAWING NUMBER: 051-00482

SIZE: D

REVISION: 8.0.0

BRANCH:

PAGE: 57 OF 72

SHEET: 66 OF 81

NOTICE OF PROPRIETARY PROPERTY:

THE INFORMATION CONTAINED HEREIN IS THE PROPRIETARY PROPERTY OF APPLE INC.
THE POSESSOR AGREES TO THE FOLLOWING:
I TO MAINTAIN THIS DOCUMENT IN CONFIDENCE
II NOT TO REPRODUCE OR COPY IT
III NOT TO REVEAL OR PUBLISH IT IN WHOLE OR PART
IV ALL RIGHTS RESERVED

# BASEBAND: CONTROL AND INTERFACES

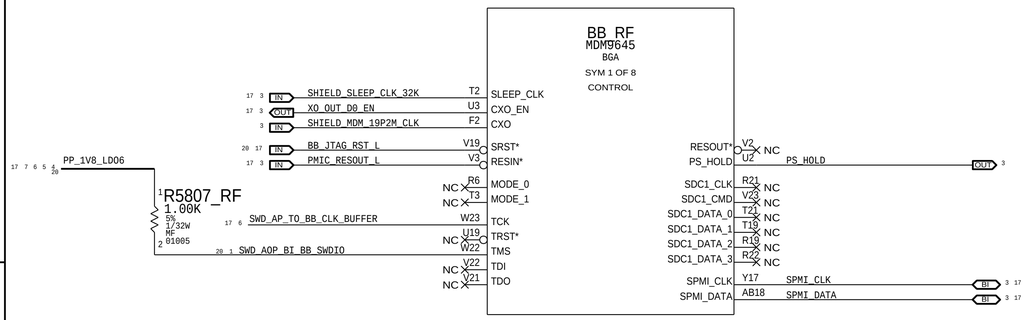


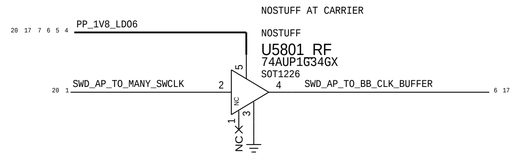


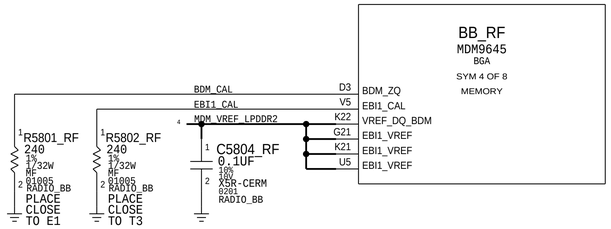


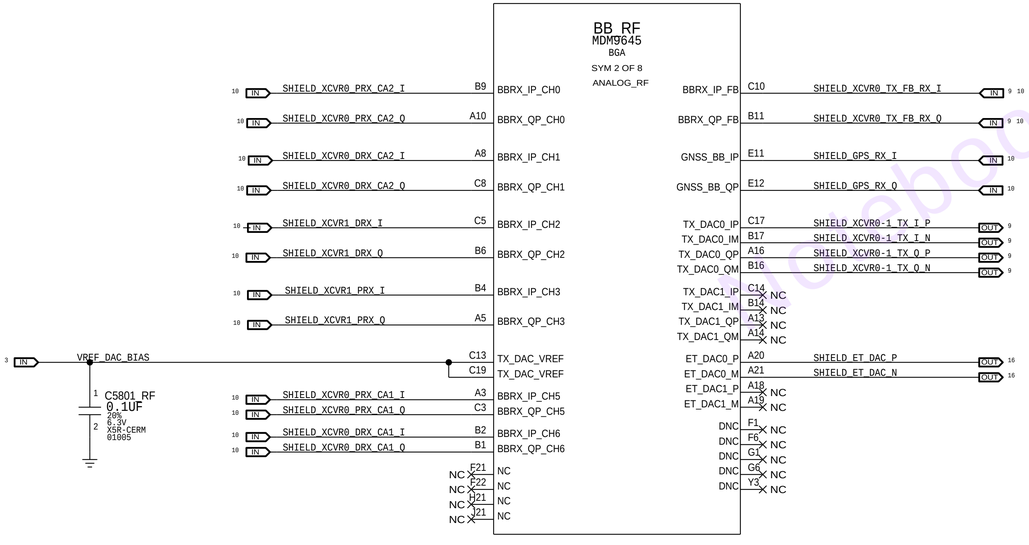


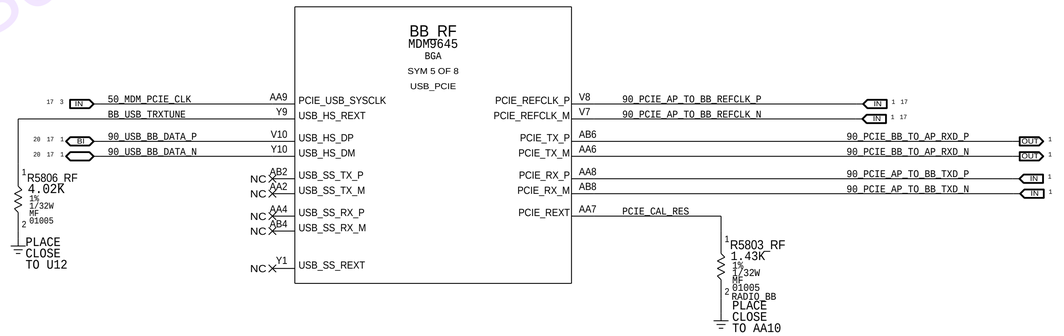


CONFIDENTIAL AND PROPRIETARY APPLE SYSTEM DESIGN. FOR REFERENCE PURPOSE ONLY - NOT A CHANGE REQUEST

SYNC_DATE=04/17/2015

PAGE TITLE

PAGE_TITLE=BASEBAND: CONTROL

Apple Inc.

DRAWING NUMBER 051-00482

SIZE D

REVISION 8.0.0

BRANCH

PAGE 58 OF 72

SHEET 67 OF 81

NOTICE OF PROPRIETARY PROPERTY:

THE INFORMATION CONTAINED HEREIN IS THE PROPRIETARY PROPERTY OF APPLE INC.
THE POSESSOR AGREES TO THE FOLLOWING:
I TO MAINTAIN THIS DOCUMENT IN CONFIDENCE
II NOT TO REPRODUCE OR COPY IT
III NOT TO REVEAL OR PUBLISH IT IN WHOLE OR PART
IV ALL RIGHTS RESERVED

# BASEBAND: GPIOS

| SKU | R5911_RF | R5912_RF |
|---|---|---|
| ROW | NOSTUFF | NOSTUFF |
| JP | 1.0 KOHM | NOSTUFF |

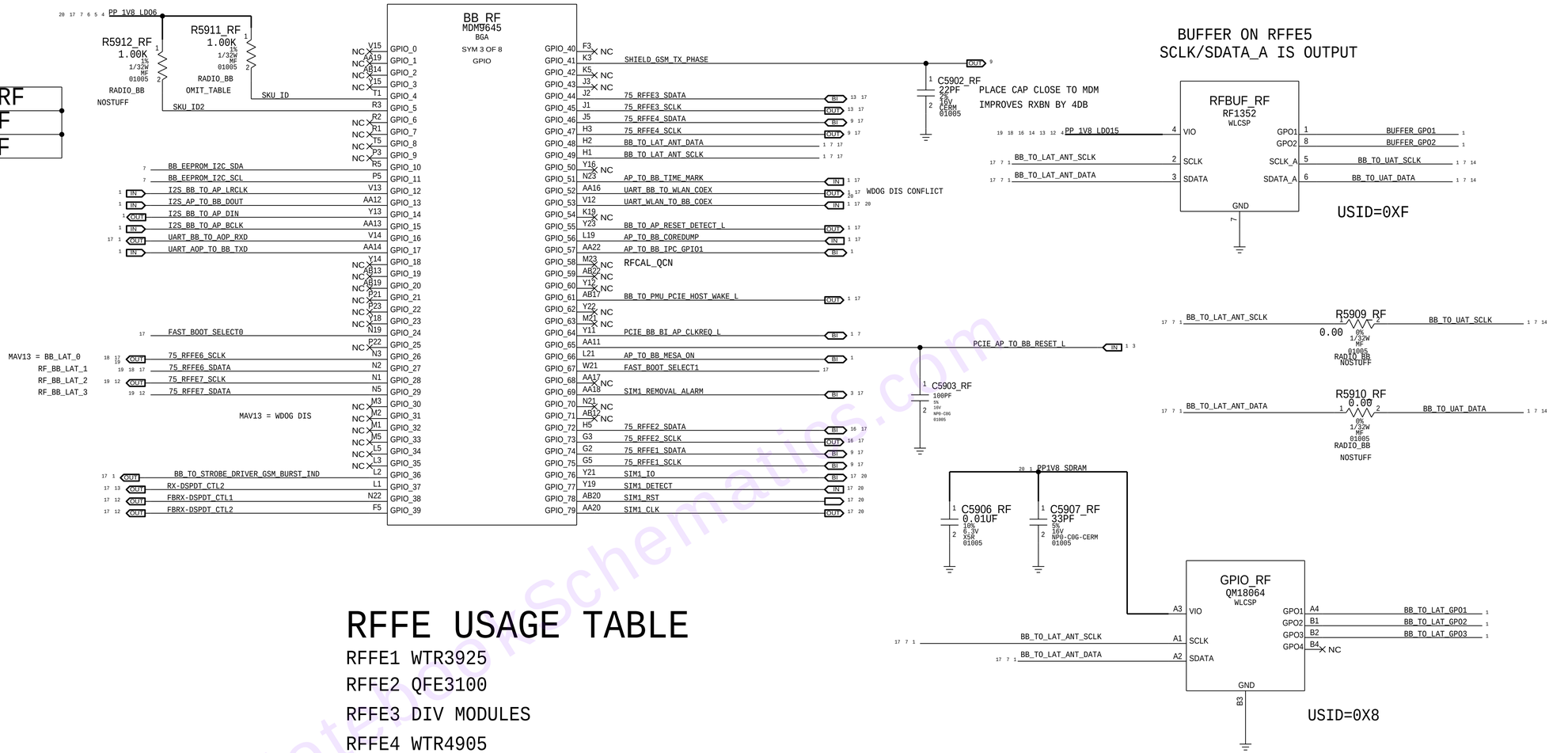


## RFFE USAGE TABLE

RFFE1 WTR3925
RFFE2 QFE3100
RFFE3 DIV MODULES
RFFE4 WTR4905
RFFE5 TUNERS + ELNAS
RFFE6 2G PA,MLB PA,MB/HB TDD PA,MB/HB FDD PA
RFFE7 LB PA, COUPLERS

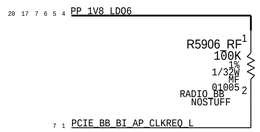


PCIE PULL-UPS TO BB RAIL

## BB EEPROM

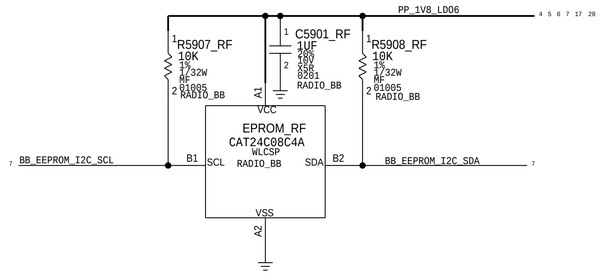


CONFIDENTIAL AND PROPRIETARY APPLE SYSTEM DESIGN. FOR REFERENCE PURPOSE ONLY - NOT A CHANGE REQUEST

SYNC_DATE=04/17/2015

PAGE TITLE: BASEBAND GPIOS

Apple Inc.

DRAWING NUMBER: 051-00482
SIZE: D
REVISION: 8.0.0
BRANCH:
PAGE: 59 OF 72
SHEET: 68 OF 81

NOTICE OF PROPRIETARY PROPERTY:
THE INFORMATION CONTAINED HEREIN IS THE PROPRIETARY PROPERTY OF APPLE INC.
THE POSESSOR AGREES TO THE FOLLOWING:
I TO MAINTAIN THIS DOCUMENT IN CONFIDENCE
II NOT TO REPRODUCE OR COPY IT
III NOT TO REVEAL OR PUBLISH IT IN WHOLE OR PART
IV ALL RIGHTS RESERVED

# TRANSCEIVER: POWER

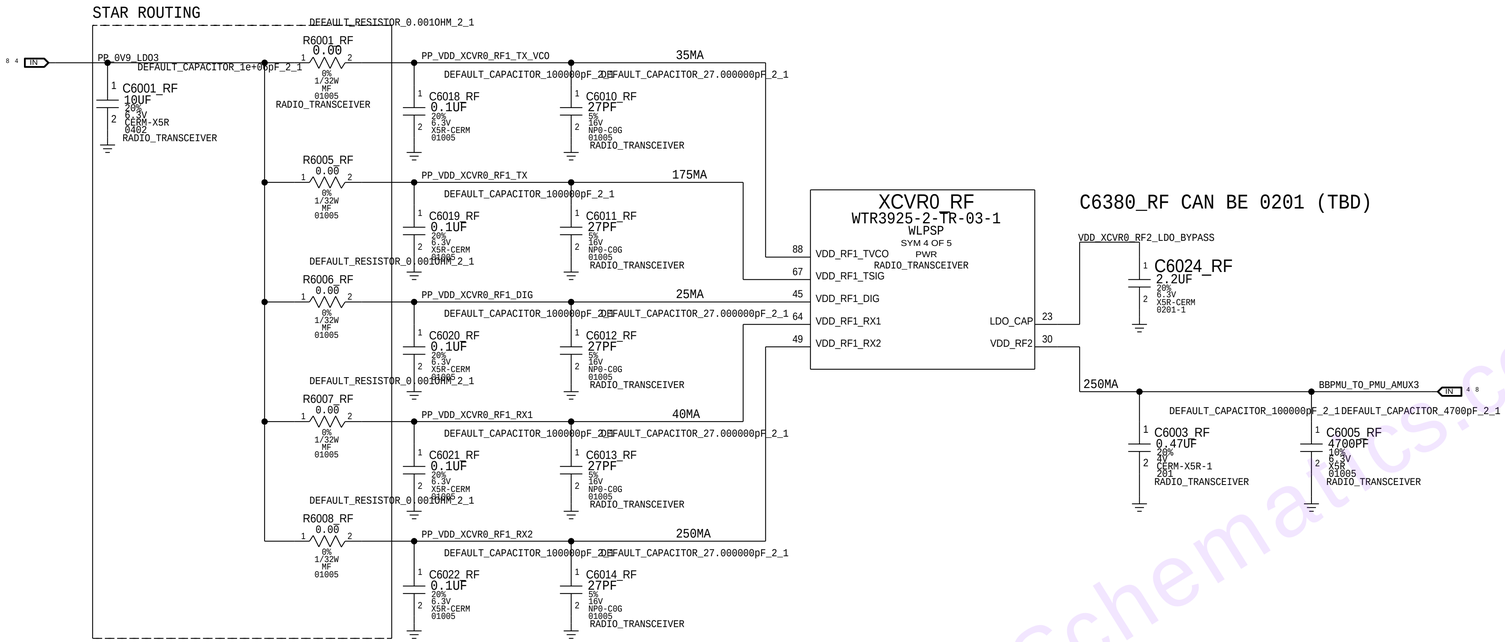


NotebookSchematics.com

CONFIDENTIAL AND PROPRIETARY APPLE SYSTEM DESIGN. FOR REFERENCE PURPOSE ONLY - NOT A CHANGE REQUEST

SYNC_DATE=04/17/2015

PAGE TITLE
PAGE_TITLE=TRANSCEIVER0/1: POWER

Apple Inc.

DRAWING NUMBER 051-00482
SIZE D
REVISION 8.0.0
BRANCH
PAGE 60 OF 72
SHEET 69 OF 81

NOTICE OF PROPRIETARY PROPERTY:
THE INFORMATION CONTAINED HEREIN IS THE PROPRIETARY PROPERTY OF APPLE INC.
THE POSESSOR AGREES TO THE FOLLOWING:
I TO MAINTAIN THIS DOCUMENT IN CONFIDENCE
II NOT TO REPRODUCE OR COPY IT
III NOT TO REVEAL OR PUBLISH IT IN WHOLE OR PART
IV ALL RIGHTS RESERVED

# TRANSCEIVER: TX PORTS

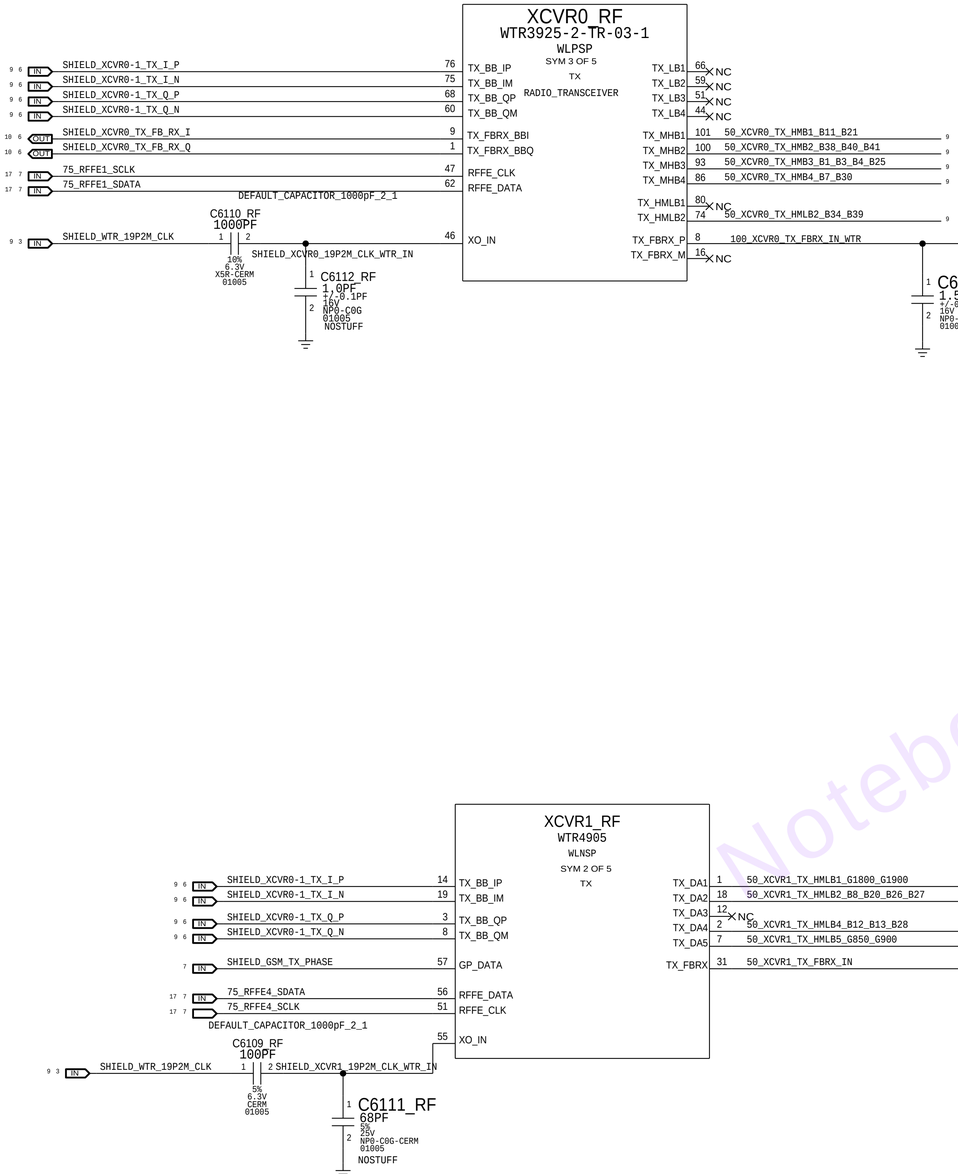


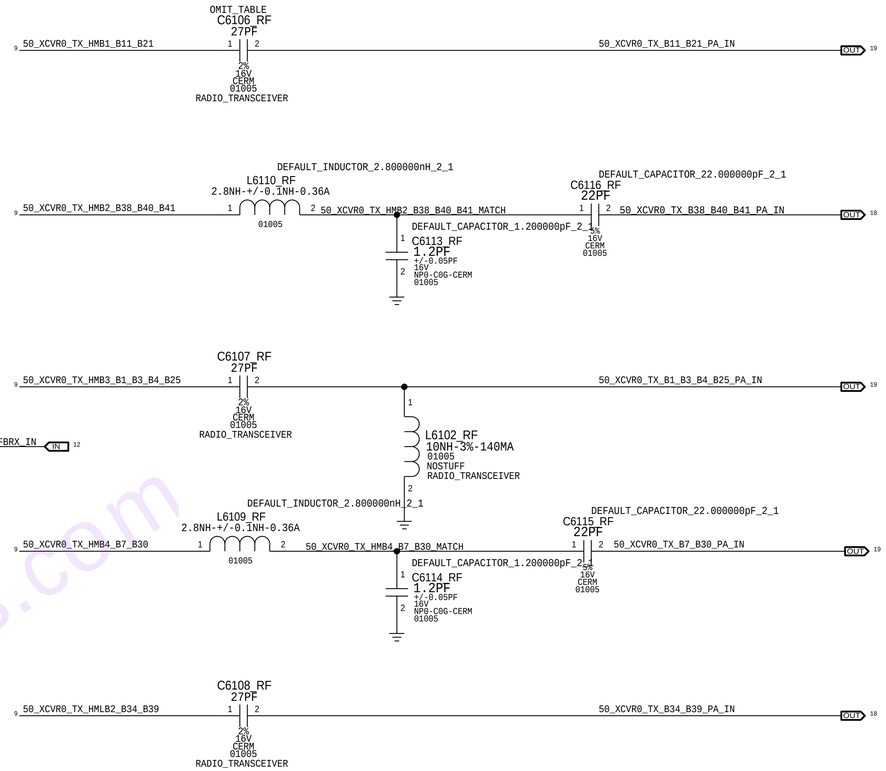





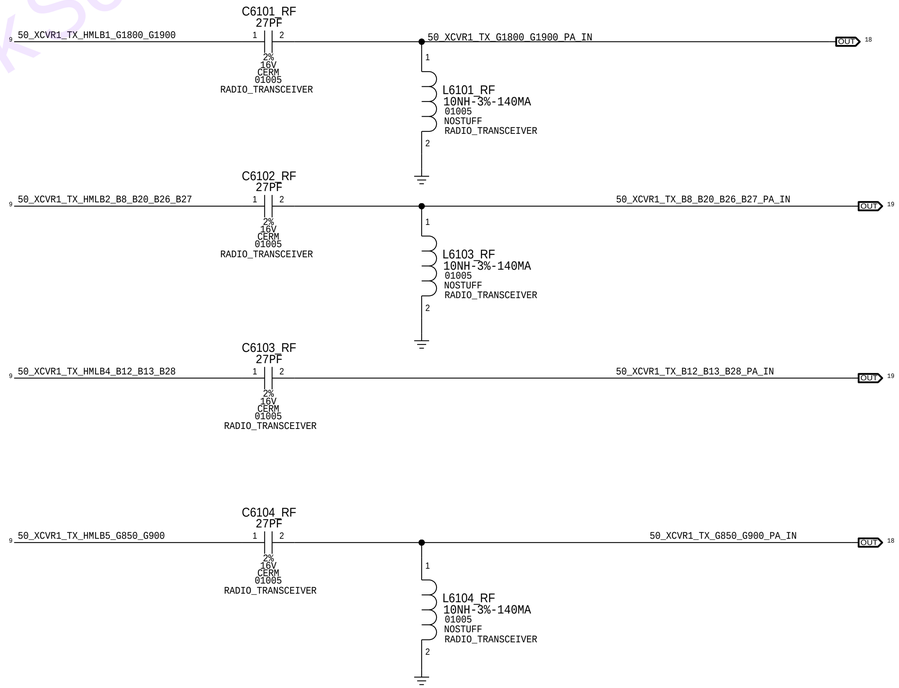


Notebookschematics.com

CONFIDENTIAL AND PROPRIETARY APPLE SYSTEM DESIGN. FOR REFERENCE PURPOSE ONLY - NOT A CHANGE REQUEST

SYNC_DATE=04/17/2015

OFFPAGE TITLE: TRANSCEIVER0/1: TX PORTS

Apple Inc.

DRAWING NUMBER: 051-00482 | SIZE: D

REVISION: 8.0.0

BRANCH:

PAGE: 61 OF 72

SHEET: 70 OF 81

NOTICE OF PROPRIETARY PROPERTY:

THE INFORMATION CONTAINED HEREIN IS THE PROPRIETARY PROPERTY OF APPLE INC.
THE POSESSOR AGREES TO THE FOLLOWING:
I TO MAINTAIN THIS DOCUMENT IN CONFIDENCE
II NOT TO REPRODUCE OR COPY IT
III NOT TO REVEAL OR PUBLISH IT IN WHOLE OR PART
IV ALL RIGHTS RESERVED

# TRANSCEIVER: PRX, DRX, & GPS PORTS

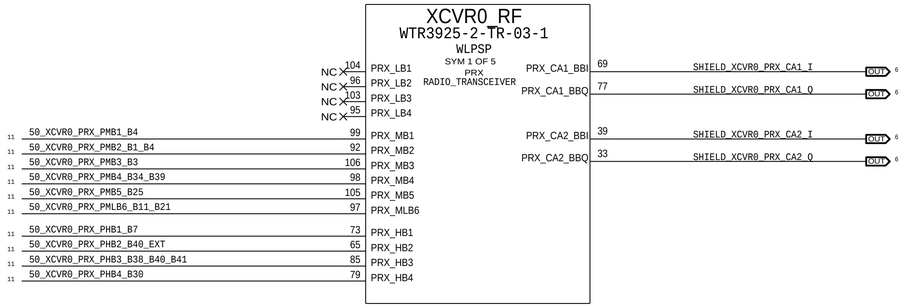


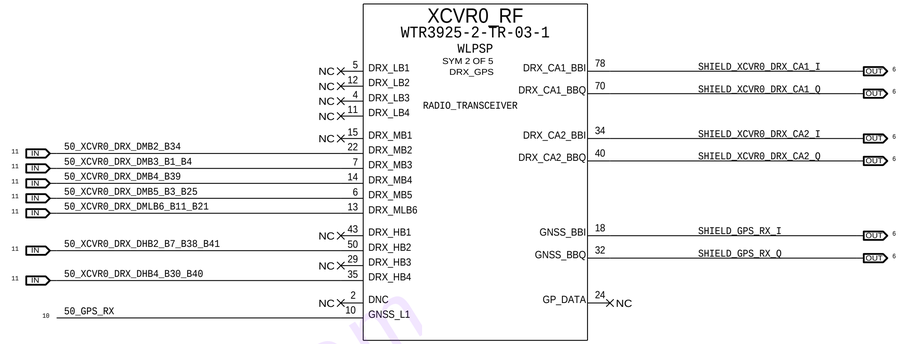


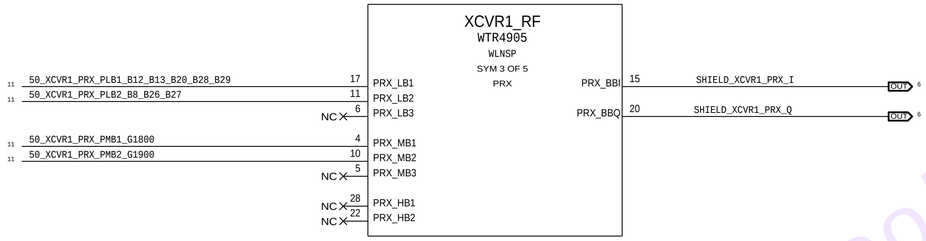





## GPS FILTER

PLACE NEAR U_WTR

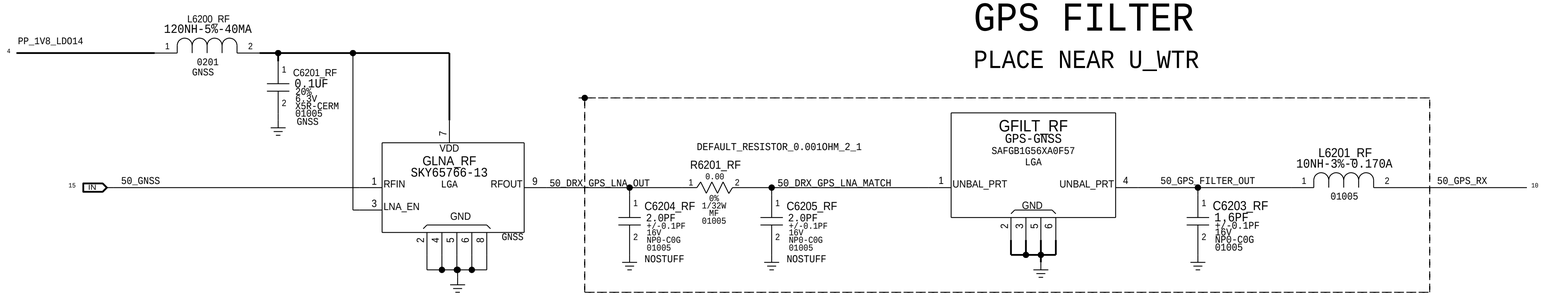


NotebookSchematics.com

CONFIDENTIAL AND PROPRIETARY APPLE SYSTEM DESIGN. FOR REFERENCE PURPOSE ONLY - NOT A CHANGE REQUEST

SYNC_DATE=04/17/2015

PAGE TITLE

PAGE_TITLE=TRANSCEIVER0/1: PRX PORTS

Apple Inc.

DRAWING NUMBER 051-00482 | SIZE D

REVISION 8.0.0

BRANCH

PAGE 62 OF 72

SHEET 71 OF 81

NOTICE OF PROPRIETARY PROPERTY:

THE INFORMATION CONTAINED HEREIN IS THE PROPRIETARY PROPERTY OF APPLE INC.
THE POSESSOR AGREES TO THE FOLLOWING:
I TO MAINTAIN THIS DOCUMENT IN CONFIDENCE
II NOT TO REPRODUCE OR COPY IT
III NOT TO REVEAL OR PUBLISH IT IN WHOLE OR PART
IV ALL RIGHTS RESERVED

# PRIMARY & DIVERSITY RECEIVE MATCHING

DC BLOCKING CAP VALUES CANNOT BE MORE THAN 33PF

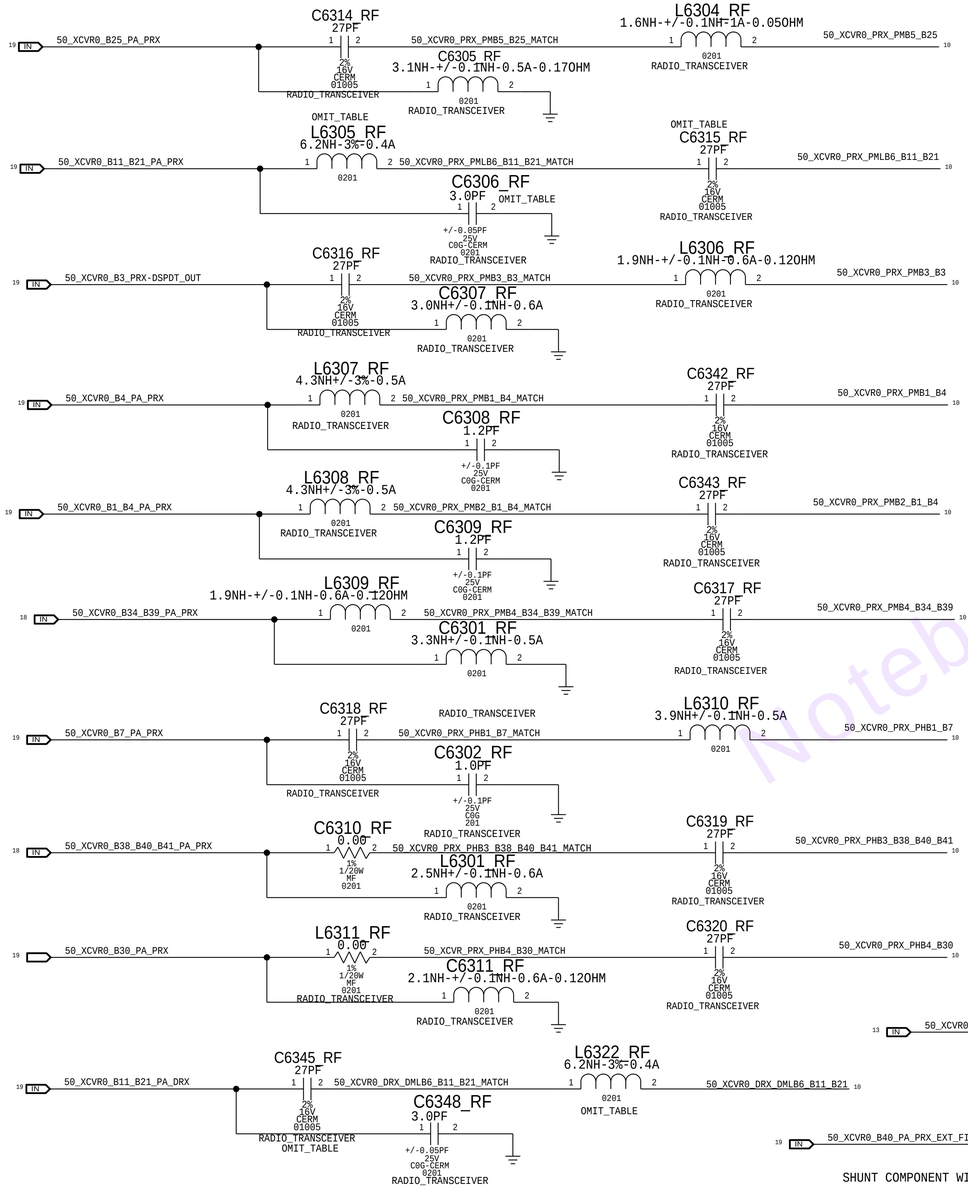


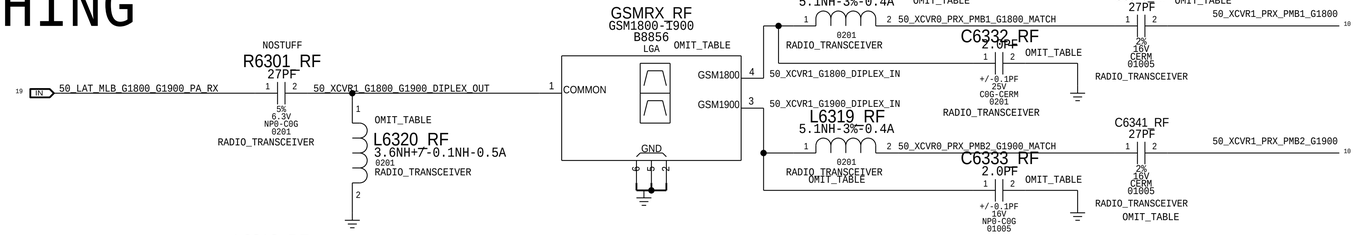


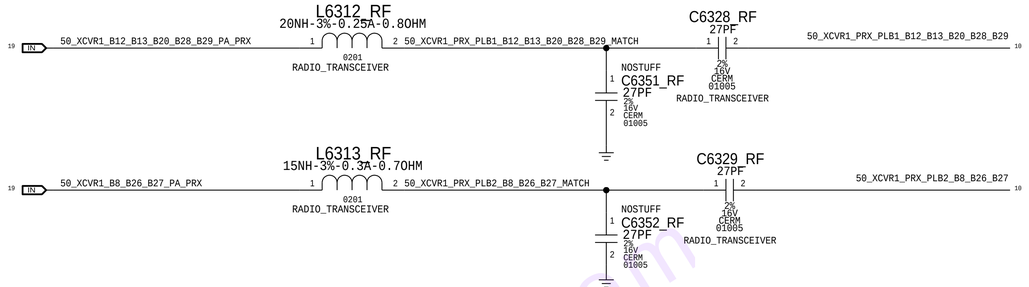


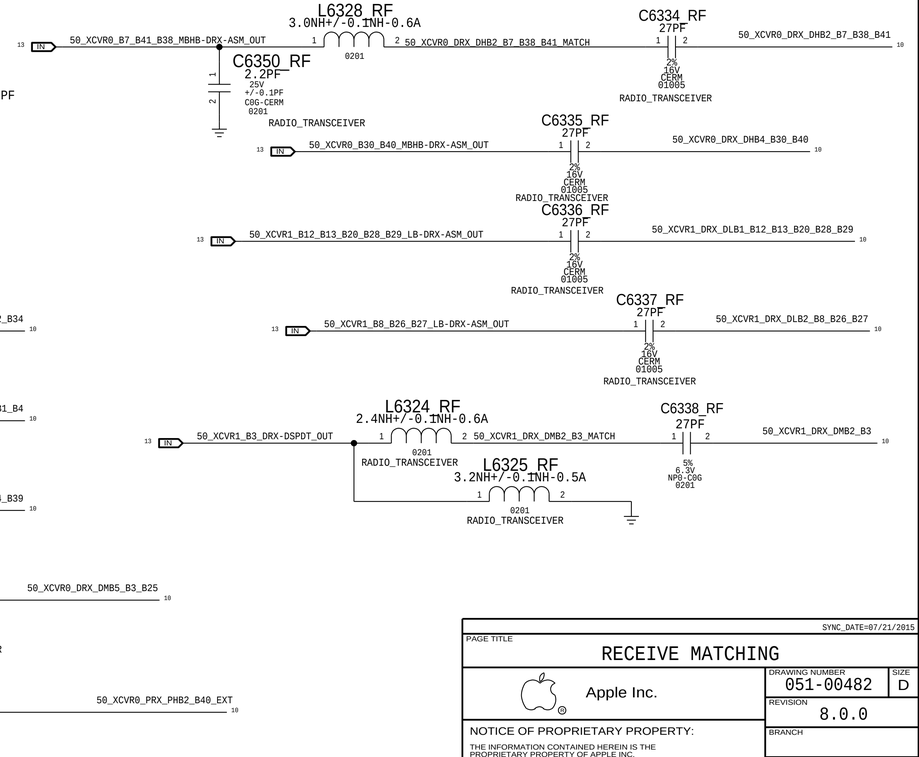


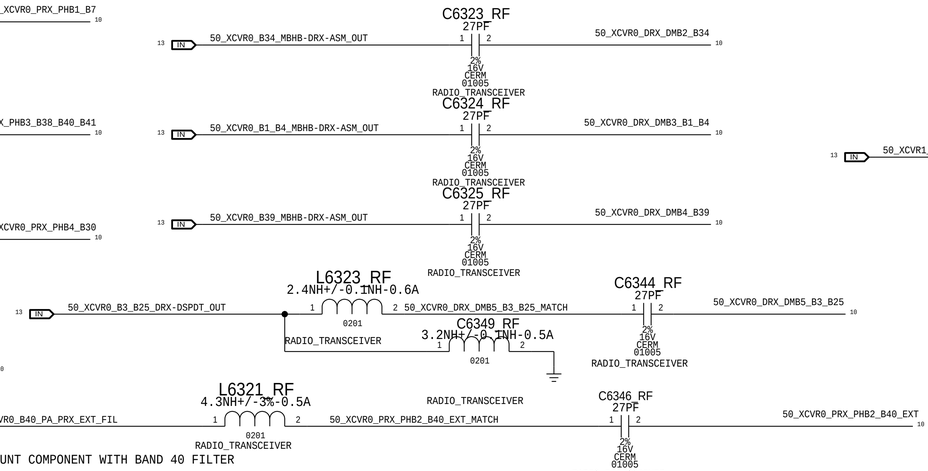


SHUNT COMPONENT WITH BAND 40 FILTER

CONFIDENTIAL AND PROPRIETARY APPLE SYSTEM DESIGN. FOR REFERENCE PURPOSE ONLY - NOT A CHANGE REQUEST

SYNC_DATE=07/21/2015

PAGE TITLE: RECEIVE MATCHING

Apple Inc.

DRAWING NUMBER: 051-00482 SIZE: D

REVISION: 8.0.0

BRANCH:

PAGE: 63 OF 72

SHEET: 72 OF 81

NOTICE OF PROPRIETARY PROPERTY:

THE INFORMATION CONTAINED HEREIN IS THE PROPRIETARY PROPERTY OF APPLE INC.
THE POSESSOR AGREES TO THE FOLLOWING:
I TO MAINTAIN THIS DOCUMENT IN CONFIDENCE
II NOT TO REPRODUCE OR COPY IT
III NOT TO REVEAL OR PUBLISH IT IN WHOLE OR PART
IV ALL RIGHTS RESERVED

NotebookSchematics.com

# LOWER ANTENNA AND COUPLER

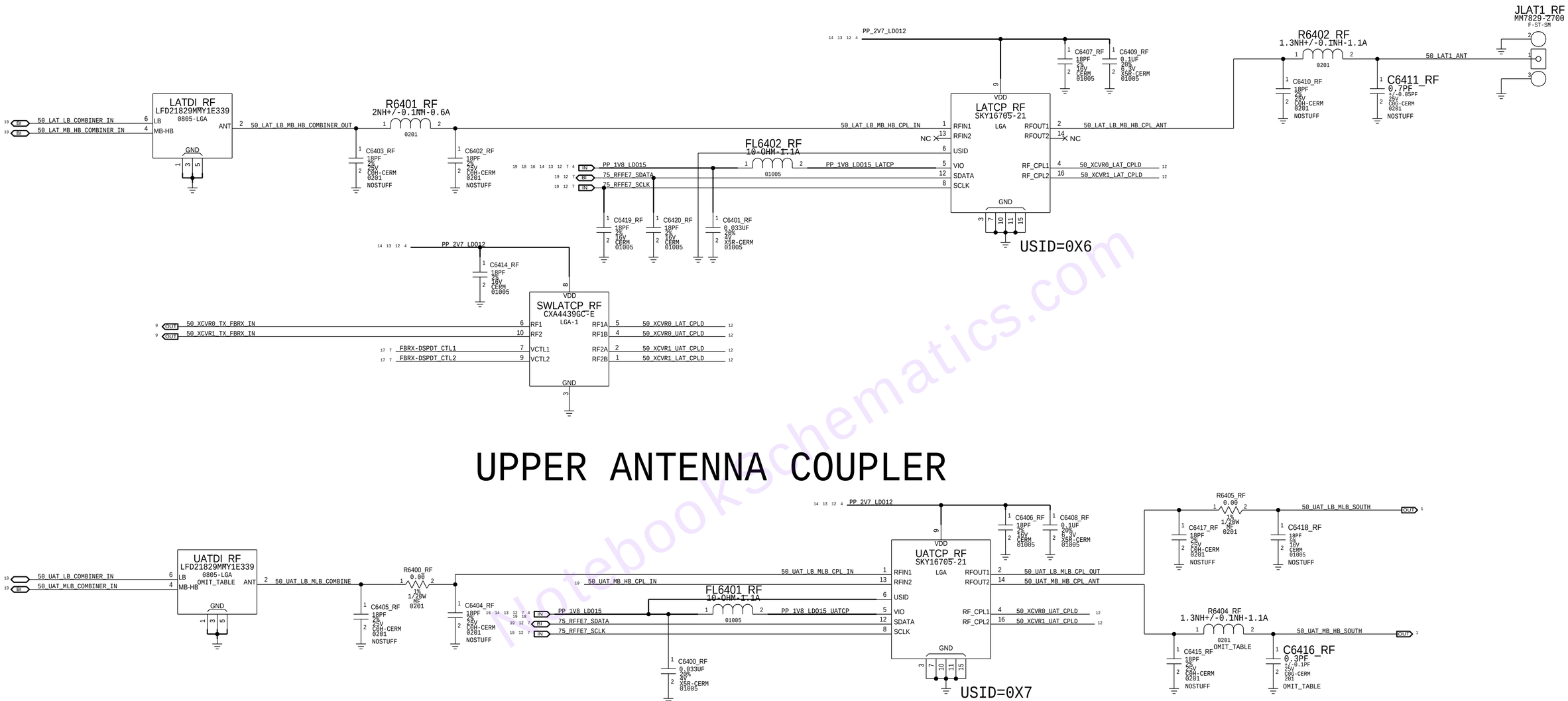


# UPPER ANTENNA COUPLER




notebookschematics.com

SYNC_DATE=04/17/2015

PAGE TITLE
PAGE_TITLE=LOWER ANTENNA & COUPLERS

Apple Inc.

DRAWING NUMBER 051-00482 | SIZE D

REVISION 8.0.0

BRANCH

PAGE 64 OF 72

SHEET 73 OF 81

NOTICE OF PROPRIETARY PROPERTY:

THE INFORMATION CONTAINED HEREIN IS THE PROPRIETARY PROPERTY OF APPLE INC.
THE POSESSOR AGREES TO THE FOLLOWING:
I TO MAINTAIN THIS DOCUMENT IN CONFIDENCE
II NOT TO REPRODUCE OR COPY IT
III NOT TO REVEAL OR PUBLISH IT IN WHOLE OR PART
IV ALL RIGHTS RESERVED

# DIVERSITY RECEIVE

## LB DRX ASM

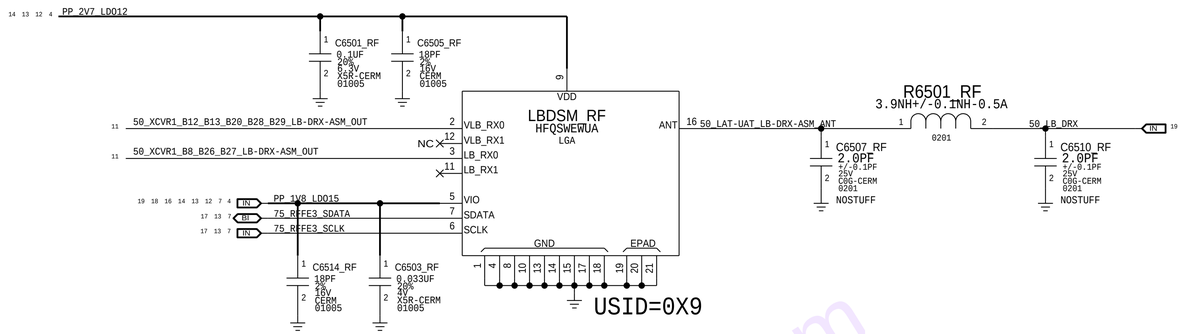


## MB HB DRX ASM

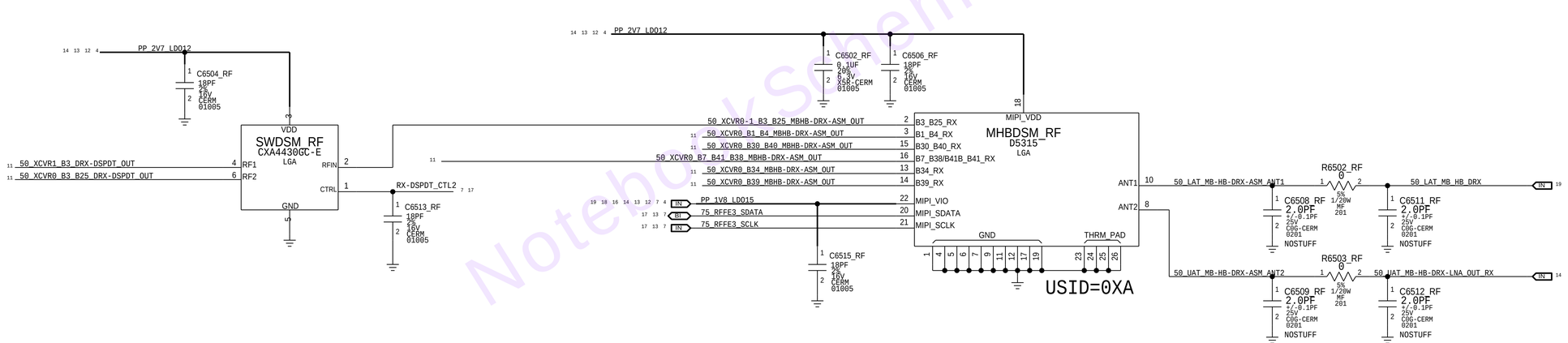


NotebookSchematics.com

SYNC_DATE=04/17/2015

PAGE TITLE
PAGE_TITLE=DIVERSITY RECEIVE ASM'S

Apple Inc.

DRAWING NUMBER 051-00482
SIZE D
REVISION 8.0.0
BRANCH
PAGE 65 OF 72
SHEET 74 OF 81

NOTICE OF PROPRIETARY PROPERTY:
THE INFORMATION CONTAINED HEREIN IS THE PROPRIETARY PROPERTY OF APPLE INC.
THE POSESSOR AGREES TO THE FOLLOWING:
I TO MAINTAIN THIS DOCUMENT IN CONFIDENCE
II NOT TO REPRODUCE OR COPY IT
III NOT TO REVEAL OR PUBLISH IT IN WHOLE OR PART
IV ALL RIGHTS RESERVED

# DIVERSITY RECEIVE LNAS

## LB DRX LNA

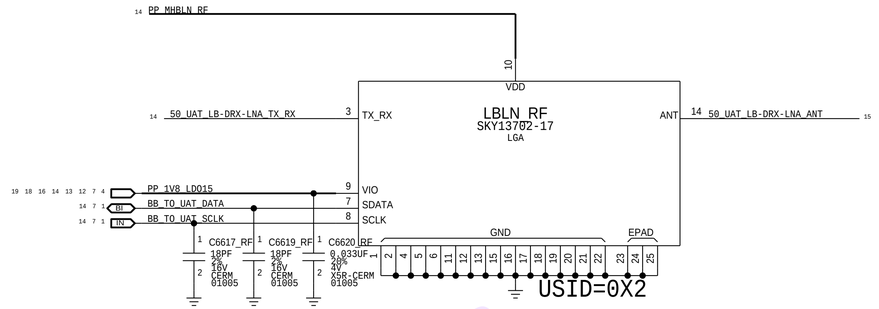


## MB/HB DRX LNA

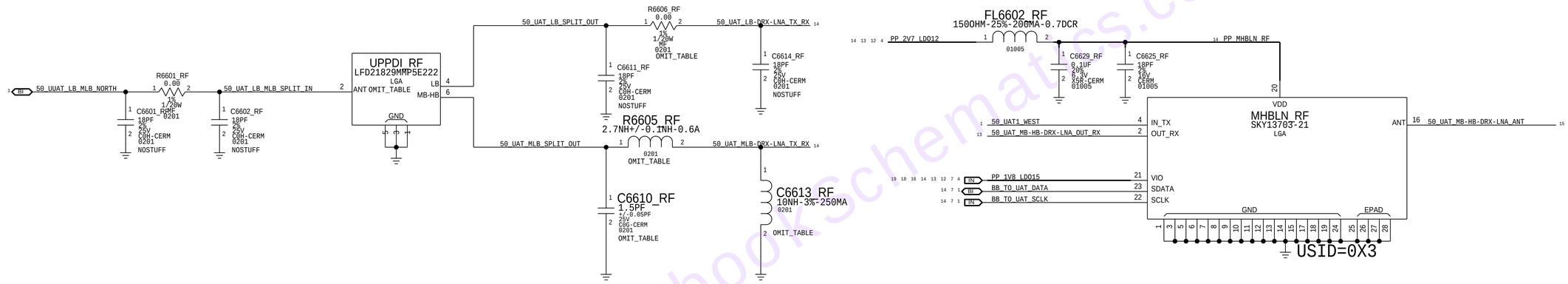


## MLB DRX LNA

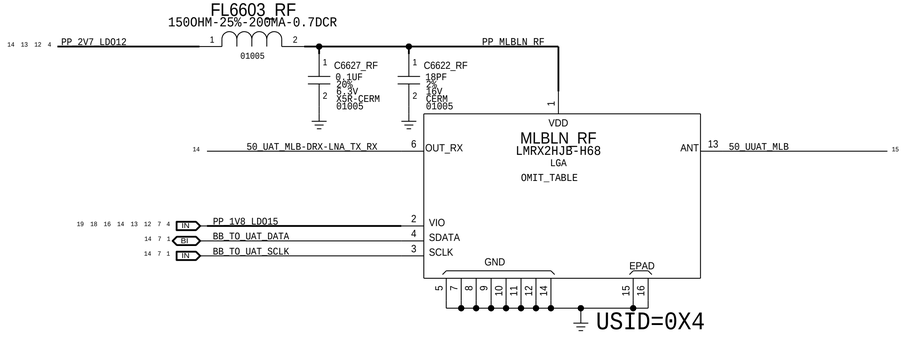


Notebookschematics.com

SYNC_DATE=04/17/2015

PAGE TITLE: DIVERSITY RECEIVE LNA'S

Apple Inc.

DRAWING NUMBER: 051-00482 SIZE: D

REVISION: 8.0.0

BRANCH:

PAGE: 66 OF 72

SHEET: 75 OF 81

NOTICE OF PROPRIETARY PROPERTY:
THE INFORMATION CONTAINED HEREIN IS THE PROPRIETARY PROPERTY OF APPLE INC.
THE POSESSOR AGREES TO THE FOLLOWING:
I TO MAINTAIN THIS DOCUMENT IN CONFIDENCE
II NOT TO REPRODUCE OR COPY IT
III NOT TO REVEAL OR PUBLISH IT IN WHOLE OR PART
IV ALL RIGHTS RESERVED

CDS_LIB=apple

# UPPER ANTENNA FEEDS

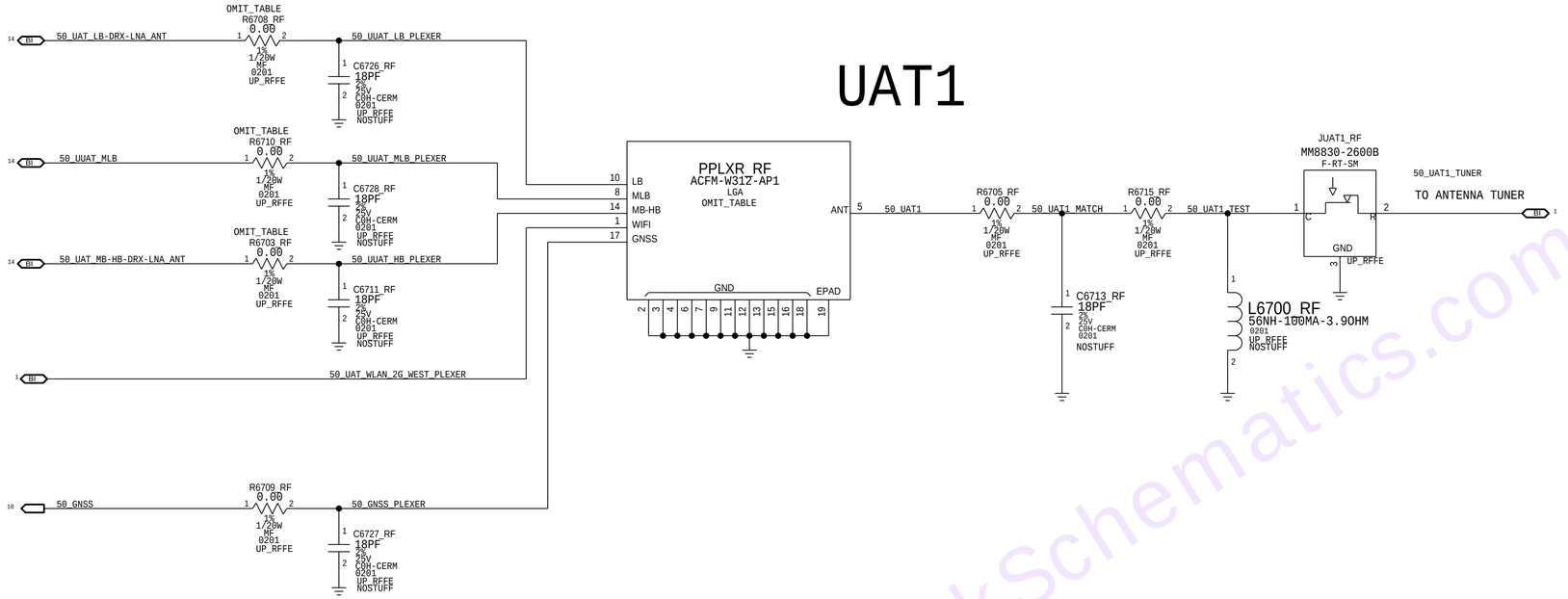


NotebookSchematics.com

SYNC_DATE=04/17/2015

PAGE TITLE
PAGE_TITLE=UPPER ANTENNA FEEDS

Apple Inc.

DRAWING NUMBER 051-00482 | SIZE D
REVISION 8.0.0
BRANCH
PAGE 67 OF 72
SHEET 76 OF 81

NOTICE OF PROPRIETARY PROPERTY:
THE INFORMATION CONTAINED HEREIN IS THE PROPRIETARY PROPERTY OF APPLE INC.
THE POSESSOR AGREES TO THE FOLLOWING:
I TO MAINTAIN THIS DOCUMENT IN CONFIDENCE
II NOT TO REPRODUCE OR COPY IT
III NOT TO REVEAL OR PUBLISH IT IN WHOLE OR PART
IV ALL RIGHTS RESERVED

# PMU: ET MODULATOR

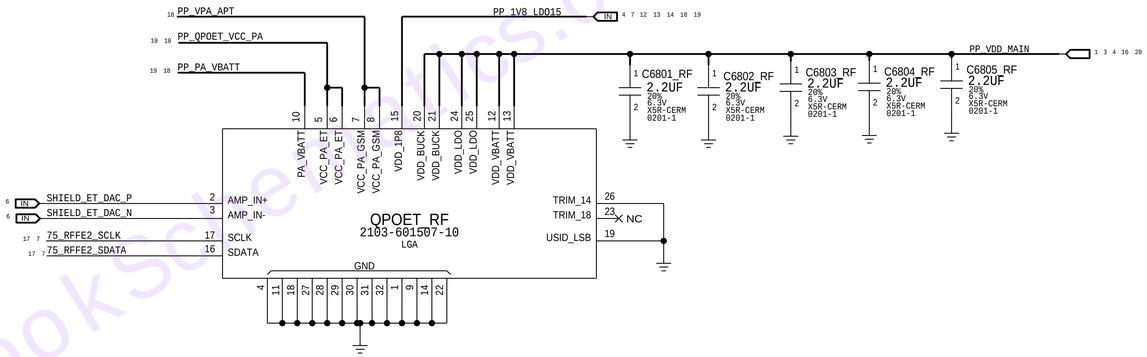


## DESENSE CAPS

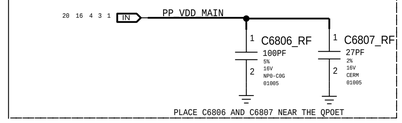


Notebook Schematics.com

CONFIDENTIAL AND PROPRIETARY APPLE SYSTEM DESIGN. FOR REFERENCE PURPOSE ONLY - NOT A CHANGE REQUEST

PAGE TITLE: PMU: ET MODULATOR

Apple Inc.

DRAWING NUMBER: 051-00482 | SIZE: D

REVISION: 8.0.0

BRANCH:

PAGE: 68 OF 72

SHEET: 77 OF 81

NOTICE OF PROPRIETARY PROPERTY:

THE INFORMATION CONTAINED HEREIN IS THE PROPRIETARY PROPERTY OF APPLE INC.
THE POSESSOR AGREES TO THE FOLLOWING:
I TO MAINTAIN THIS DOCUMENT IN CONFIDENCE
II NOT TO REPRODUCE OR COPY IT
III NOT TO REVEAL OR PUBLISH IT IN WHOLE OR PART
IV ALL RIGHTS RESERVED

# MLB TEST POINTS

## BASEBAND

PP7000_RF — P2MM-NSM SM — PP 1 — 75_RFFE1_SDATA — 7 9 — OMIT
PP6952_RF — P2MM-NSM SM — PP 1 — 75_RFFE1_SCLK — 7 9 — OMIT
PP6943_RF — P2MM-NSM SM — PP 1 — 75_RFFE2_SDATA — 7 16 — OMIT
PP6944_RF — P2MM-NSM SM — PP 1 — 75_RFFE2_SCLK — 7 16 — OMIT
PP6939_RF — P2MM-NSM SM — PP 1 — 75_RFFE3_SDATA — 7 13 — OMIT
PP6940_RF — P2MM-NSM SM — PP 1 — 75_RFFE3_SCLK — 7 13 — OMIT
PP6941_RF — P2MM-NSM SM — PP 1 — 75_RFFE4_SDATA — 7 9 — OMIT
PP6942_RF — P2MM-NSM SM — PP 1 — 75_RFFE4_SCLK — 7 9 — OMIT
PP6903_RF — P2MM-NSM SM — PP 1 — BB_TO_LAT_ANT_DATA — 1 7 — OMIT
PP6904_RF — P2MM-NSM SM — PP 1 — BB_TO_LAT_ANT_SCLK — 1 7 — OMIT
PP6935_RF — P2MM-NSM SM — PP 1 — 75_RFFE6_SCLK — 7 18 19 — OMIT
PP6936_RF — P2MM-NSM SM — PP 1 — 75_RFFE6_SDATA — 7 18 19 — OMIT

PP6906_RF — P2MM-NSM SM — PP 1 — SWD_AP_TO_BB_CLK_BUFFER — 6 — OMIT
PP6907_RF — P2MM-NSM SM — PP 1 — PMU_TO_BB_USB_VBUS_DETECT — 1 3 20 — OMIT
PP6908_RF — P2MM-NSM SM — PP 1 — NFC_TO_BB_CLK_REQ — 1 3 — OMIT
PP6909_RF — P2MM-NSM SM — PP 1 — SIM1_REMOVAL_ALARM — 3 7 — OMIT
PP6911_RF — P2MM-NSM SM — PP 1 — 50_MDM_PCIE_CLK — 3 6 — OMIT
PP6912_RF — P2MM-NSM SM — PP 1 — XO_OUT_D0_EN — 3 6 — OMIT
PP6913_RF — P2MM-NSM SM — PP 1 — BB_TO_NFC_CLK — 1 3 — OMIT
PP6914_RF — P2MM-NSM SM — PP 1 — SHIELD_SLEEP_CLK_32K — 3 6 — OMIT
PP6933_RF — P2MM-NSM SM — PP 1 — BB_TO_STROBE_DRIVER_GSM_BURST_IND — OMIT
PP6917_RF — P2MM-NSM SM — PP 1 — UART_BB_TO_WLAN_COEX — 1 7 20 — OMIT
PP6918_RF — P2MM-NSM SM — PP 1 — UART_WLAN_TO_BB_COEX — 1 7 20 — OMIT

PP6919_RF — P2MM-NSM SM — PP 1 — BB_JTAG_RST_L — 6 20 — OMIT
PP6920_RF — P2MM-NSM SM — PP 1 — FBRX-DSPDT_CTL1 — 7 12 — OMIT
PP6921_RF — P2MM-NSM SM — PP 1 — FBRX-DSPDT_CTL2 — 7 12 — OMIT
PP6923_RF — P2MM-NSM SM — PP 1 — BB_TO_PMU_PCIE_HOST_WAKE_L — 1 7 — OMIT
PP6924_RF — P2MM-NSM SM — PP 1 — SPMI_CLK — 3 6 — OMIT
PP6925_RF — P2MM-NSM SM — PP 1 — SPMI_DATA — 3 6 — OMIT
PP6926_RF — P2MM-NSM SM — PP 1 — UART_BB_TO_AOP_RXD — 1 7 — OMIT
PP6929_RF — P2MM-NSM SM — PP 1 — AP_TO_BB_TIME_MARK — 1 7 — OMIT
PP6930_RF — P2MM-NSM SM — PP 1 — BB_TO_AP_RESET_DETECT_L — 1 7 — OMIT
PP6931_RF — P2MM-NSM SM — PP 1 — AP_TO_BB_COREDUMP — 1 7 — OMIT
PP6938_RF — P2MM-NSM SM — PP 1 — RX-DSPDT_CTL2 — 7 13 — OMIT

## PCIE

PP6915_RF — P2MM-NSM SM — PP 1 — 90_PCIE_AP_TO_BB_REFCLK_P — 1 6 — OMIT
PP6916_RF — P2MM-NSM SM — PP 1 — 90_PCIE_AP_TO_BB_REFCLK_N — 1 6 — OMIT

## PCIE GND

PP6970_RF — P2MM-NSM SM — PP 1 — OMIT
PP6971_RF — P2MM-NSM SM — PP 1 — OMIT

## BBPMU

PP6945_RF — P2MM-NSM SM — PP 1 — PMIC_RESOUT_L — 3 6 — OMIT
PP6905_RF — P2MM-NSM SM — PP 1 — AP_TO_BBPMU_RADIO_ON_L — 1 3 20 — OMIT
PP6900_RF — P2MM-NSM SM — PP 1 — PMU_TO_BBPMU_RESET_L — 1 3 — OMIT

## SIM

PP6953_RF — P2MM-NSM SM — PP 1 — SIM1_IO — 7 20 — OMIT
PP6969_RF — P2MM-NSM SM — PP 1 — SIM1_DETECT — 7 20 — OMIT
PP6972_RF — P2MM-NSM SM — PP 1 — SIM1_RST — 7 20 — OMIT
PP6973_RF — P2MM-NSM SM — PP 1 — SIM1_CLK — 7 20 — OMIT
PP6974_RF — P2MM-NSM SM — PP 1 — 90_USB_BB_DATA_P — 1 6 20 — OMIT
PP6977_RF — P2MM-NSM SM — PP 1 — 90_USB_BB_DATA_N — 1 6 20 — OMIT

## BOOT CONFIG

DEFAULT FAST_BOOT[2:0]
USB = 0X2

20 7 6 5 4 PP_1V8_LDO6
R6921_RF — NOSTUFF — 10K — 1/32W — MF — 01005 — RADIO_DEBUG — 1 2
R6922_RF — 10K — 1/32W — MF — 01005 — RADIO_DEBUG — 1 2
7 FAST_BOOT_SELECT1
7 FAST_BOOT_SELECT0

## ICEFALL

PP6978_RF — P2MM-NSM SM — PP 1 — AP_TO_ICEFALL_FW_DWLD_REQ — 1 20 — OMIT
PP6979_RF — P2MM-NSM SM — PP 1 — SIM1_SWP — 20 — OMIT
PP6980_RF — P2MM-NSM SM — PP 1 — SE2_SWP — 20 — OMIT
PP6981_RF — P2MM-NSM SM — PP 1 — ICEFALL_LDO_ENABLE — 1 20 — OMIT

PP7500_RF — P2MM-NSM SM — PP 1 — SE2_READY — 1 20 — OMIT
PP7501_RF — P2MM-NSM SM — PP 1 — NFC_SWP_MUX — 1 20 — OMIT
PP7502_RF — P2MM-NSM SM — PP 1 — SE2_PWR_REQ — 1 20 — OMIT

NotebookSchematics.com

PAGE TITLE: TEST POINTS & BOOT CONFIG

Apple Inc.

DRAWING NUMBER: 051-00482
SIZE: D
REVISION: 8.0.0
BRANCH:
PAGE: 69 OF 72
SHEET: 78 OF 81

NOTICE OF PROPRIETARY PROPERTY:
THE INFORMATION CONTAINED HEREIN IS THE PROPRIETARY PROPERTY OF APPLE INC.
THE POSESSOR AGREES TO THE FOLLOWING:
I TO MAINTAIN THIS DOCUMENT IN CONFIDENCE
II NOT TO REPRODUCE OR COPY IT
III NOT TO REVEAL OR PUBLISH IT IN WHOLE OR PART
IV ALL RIGHTS RESERVED

# TDD TRANSMIT

## 2G PA

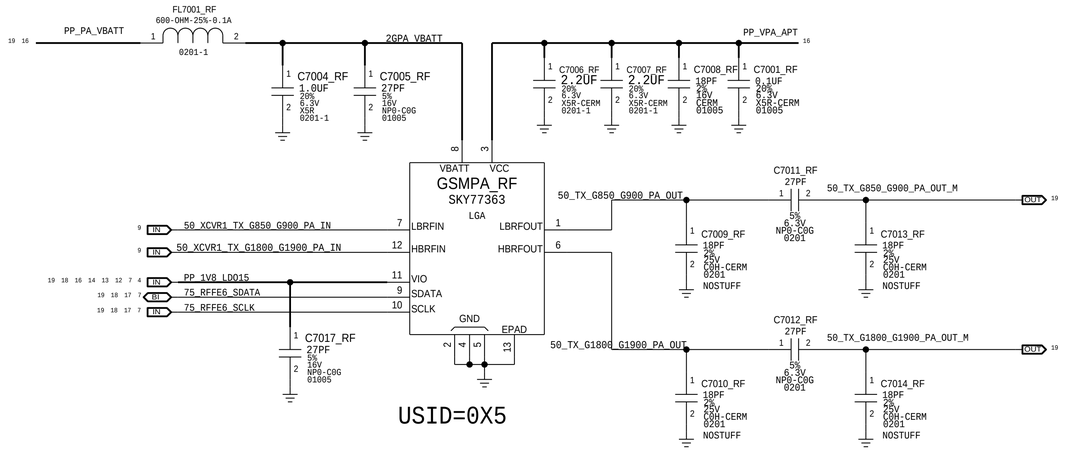


USID=0X5

## MB HB TDD PA

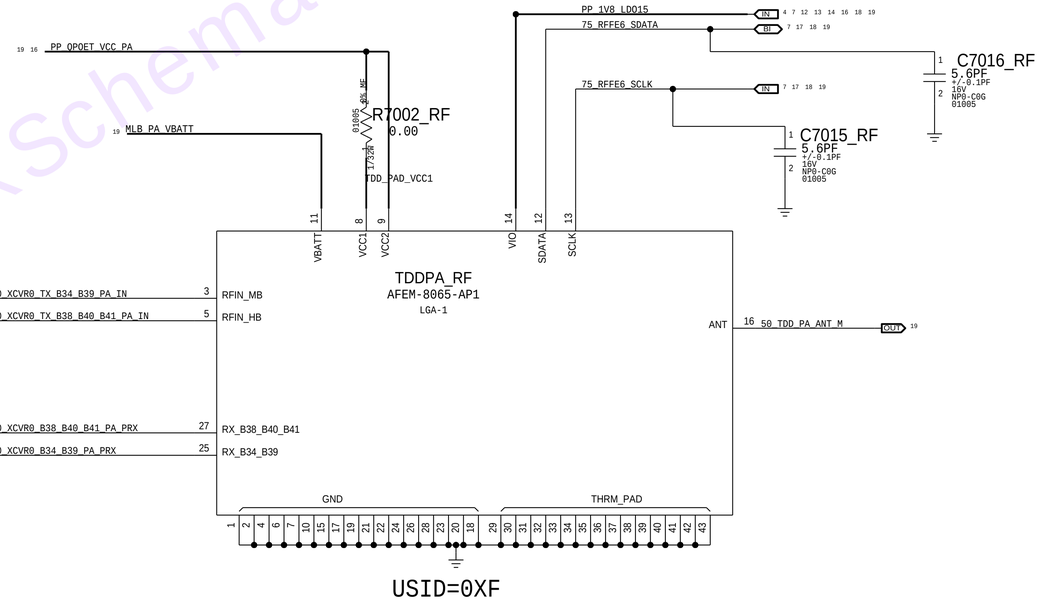


USID=0XF

NotebookSchematics.com

SYNC_DATE=04/17/2015

PAGE TITLE: PAGE_TITLE=TDD TRANSMIT

Apple Inc.

DRAWING NUMBER: 051-00482 | SIZE: D

REVISION: 8.0.0

BRANCH:

PAGE: 70 OF 72

SHEET: 79 OF 81

NOTICE OF PROPRIETARY PROPERTY:

THE INFORMATION CONTAINED HEREIN IS THE PROPRIETARY PROPERTY OF APPLE INC.
THE POSESSOR AGREES TO THE FOLLOWING:
I TO MAINTAIN THIS DOCUMENT IN CONFIDENCE
II NOT TO REPRODUCE OR COPY IT
III NOT TO REVEAL OR PUBLISH IT IN WHOLE OR PART
IV ALL RIGHTS RESERVED

# FDD TRANSMIT

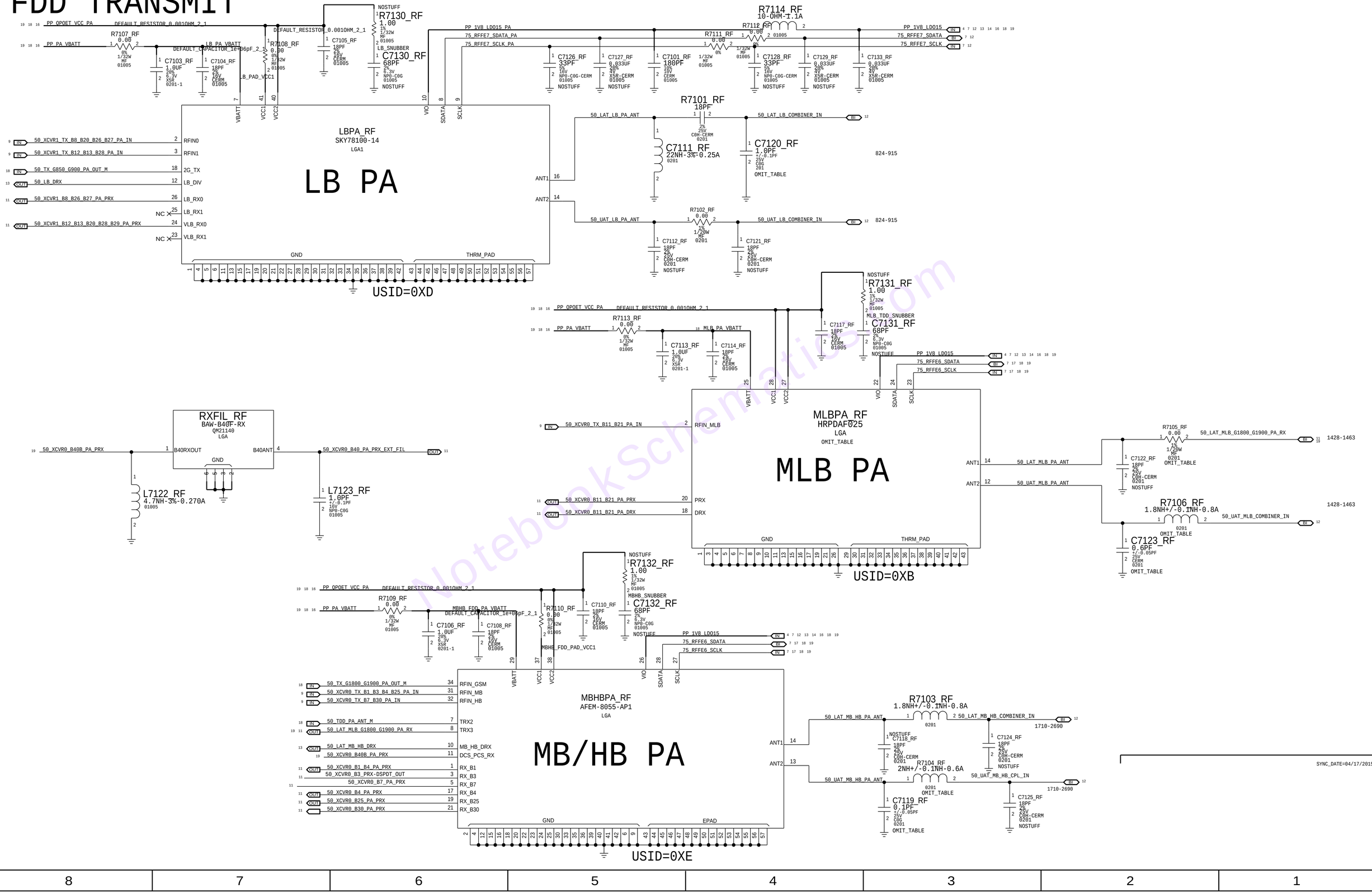


NotebookSchematics.com

# ICEFALL

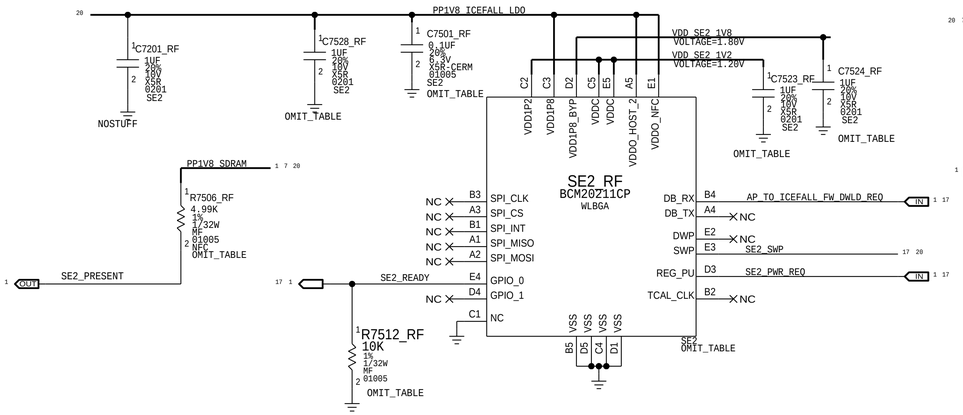


# SWP MUX

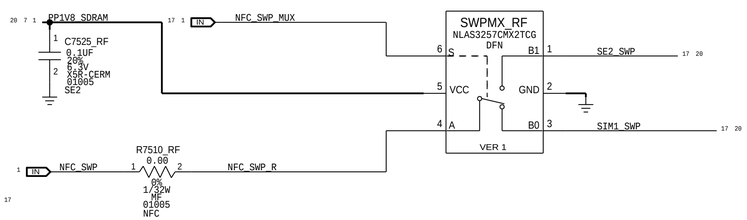


# ICEFALL LDO

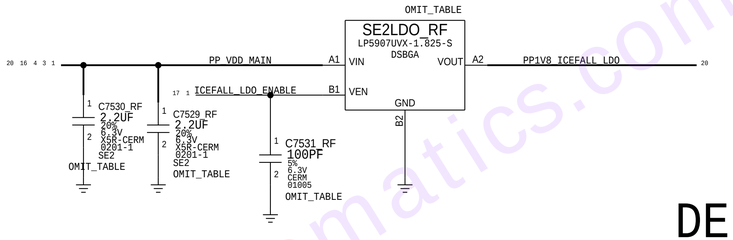


# SIM CARD CONNECTOR

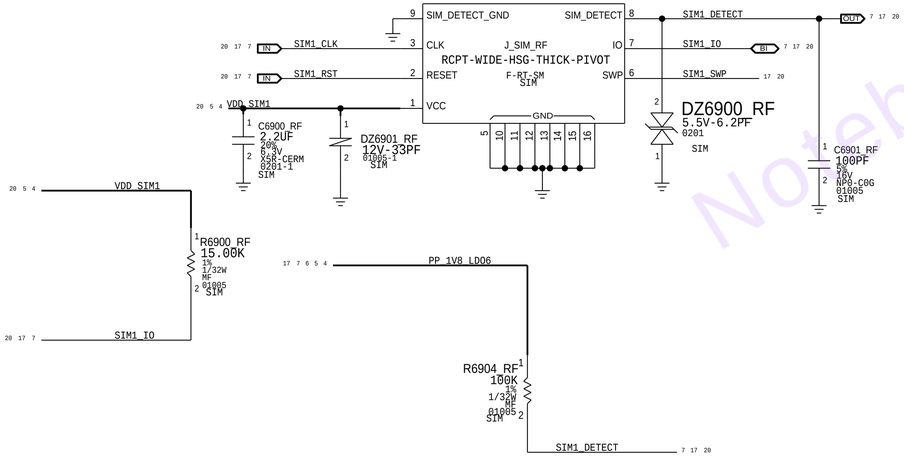


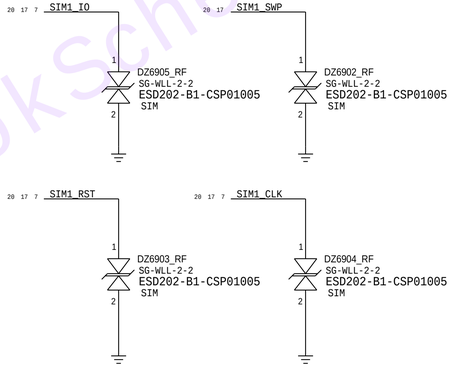


# DEBUG CONNECTOR

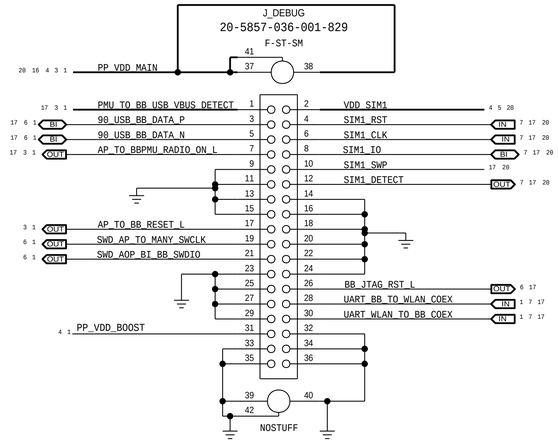


NotebookSchematics.com