1. ALL RESISTANCE VALUES ARE IN OHMS, 0.1 WATT +/- 5%.
2. ALL CAPACITANCE VALUES ARE IN MICROFARADS.
3. ALL CRYSTALS & OSCILLATOR VALUES ARE IN HERTZ.

REV	ECN	DESCRIPTION OF REVISION	CK APPD / DATE
9	0008409760	ENGINEERING RELEASED	2017-04-05

X891/X893 MLB Top: EVT

LAST_MODIFICATION=Mon Apr 3 13:03:06 2017

PAGE	CSA	CONTENTS	SYNC	DATE
1	1	TABLE OF CONTENTS		
2	2	SYSTEM:BOM Tables	test_mlb	10/13/2016
3	4	SYSTEM: Mechanical Components		
4	5	SYSTEM: Testpoints (Top)	test_mlb	10/13/2016
5	6	BOOTSTRAPPING	test_mlb	10/13/2016
6	10	SOC: JTAG,USB,XTAL	test_mlb	10/17/2016
7	11	SOC: PCIE	test_mlb	10/17/2016
8	12	SOC: MIPI & ISP	test_mlb	10/13/2016
9	13	SOC: LPDP	test_mlb	10/13/2016
10	14	SOC: Serial	test_mlb	10/17/2016
11	15	SOC: GPIO & UART	test_mlb	10/13/2016
12	16	SOC: AOP	test_mlb	10/17/2016
13	17	SOC: Power (1/3)	test_mlb	10/17/2016
14	18	SOC: Power (2/3)	test_mlb	10/17/2016
15	19	SOC: Power (3/3)	test_mlb	10/17/2016
16	26	NAND	test_mlb	10/13/2016
17	27	SYSTEM POWER: PMU Bucks (1/4)	test_mlb	10/13/2016
18	28	SYSTEM POWER: PMU Bucks (2/4)	test_mlb	10/13/2016
19	29	SYSTEM POWER: PMU LDOs (3/4)	test_mlb	10/13/2016
20	30	SYSTEM POWER: PMU (4/4)	test_mlb	11/01/2016
21	31	SYSTEM POWER: Boost	test_mlb	10/13/2016
22	32	SYSTEM POWER: B2B Battery	test_mlb	10/13/2016
23	33	SYSTEM POWER: Charger	test_mlb	10/13/2016
24	34	SYSTEM POWER: Iktara		
25	35	SYSTEM POWER: B2B Cyclone + Button	test_mlb	10/13/2016
26	36	SENSORS	test_mlb	10/13/2016
27	37	CAMERA: PMU (1/2)	test_mlb	10/13/2016
28	38	CAMERA: PMU (2/2)	test_mlb	10/13/2016
29	39	CAMERA: B2B Wide (WY)	test_mlb	10/13/2016
30	40	CAMERA: B2B Tele (MT)	test_mlb	10/13/2016
31	41	CAMERA: Strobe Drivers	test_mlb	10/13/2016
32	42	CAMERA: B2B FCAM	test_mlb	10/13/2016
33	43	CAMERA: B2B Strobe + Hold Button	test_mlb	10/13/2016
34	44	PEARL: Power	test_mlb	10/13/2016
35	45	PEARL: B2B Romeo + Juliet	test_mlb	10/13/2016
36	46	PEARL: B2B Rosaline + Misc	test_mlb	10/13/2016
37	47	AUDIO: CODEC (1/2)	test_mlb	10/13/2016
38	48	AUDIO: CODEC (2/2)	test_mlb	10/13/2016
39	49	AUDIO: Speaker Amp Bottom		08/25/2015
40	50	AUDIO: Speaker Amp Top		08/25/2015
41	51	ARC: Driver	test_mlb	10/13/2016
42	56	CG: Power Supplies - Touch & Display	test_mlb	10/13/2016
43	57	CG: B2B Display	test_mlb	10/13/2016
44	58	CG: B2B Orb & Touch		08/25/2015
45	59	I/O: Overvoltage Cut-Off Circuit	sync	01/10/2017
46	61	I/O: Accessory Buck	test_mlb	10/17/2016
47	62	I/O: USB PD	test_mlb	10/13/2016
48	63	I/O: Hydra	test_mlb	10/13/2016
49	64	I/O: B2B Dock	test_mlb	10/13/2016
50	65	I/O: Interposer (Bottom)	test_mlb	10/13/2016
51	80	RADIOS		06/04/2015

BOM:639-04583 (Ultimate)
BOM:639-03409 (Extreme)
MCO:056-04077

PART#	QTY	DESCRIPTION	REFERENCE DESIGNATOR(S)	CRITICAL	BOM OPTION
051-02221	1	SCH,MLB_TOP,X891	SCH	NO	COMMON
820-00863	1	PCB,MLB_TOP,X891	PCB	NO	COMMON

TABLE OF CONTENTS

DRAWING TITLE: SCH,MLB,TOP,X891

Apple Inc.

DRAWING NUMBER: 051-02221 SIZE: D
REVISION: 9.0.0
BRANCH: evt-1
PAGE: 1 OF 80
SHEET: 1 OF 51

NOTICE OF PROPRIETARY PROPERTY:
THE INFORMATION CONTAINED HEREIN IS THE PROPRIETARY PROPERTY OF APPLE INC.
THE POSESSOR AGREES TO THE FOLLOWING:
I TO MAINTAIN THIS DOCUMENT IN CONFIDENCE
II NOT TO REPRODUCE OR COPY IT
III NOT TO REVEAL OR PUBLISH IT IN WHOLE OR PART
IV ALL RIGHTS RESERVED

PDF Watermark Remover DEMO : Purchase from www.PDFWatermarkRemover.com to remove the watermark

EEEE Codes

PART#	QTY	DESCRIPTION	REFERENCE DESIGNATOR(S)	CRITICAL	BOM OPTION
825-7691	1	EEEE FOR (MLB_TOP,639-04583,ULTIMATE)	EEEE_J2WJ	NO	ULTIMATE
825-7691	1	EEEE FOR (MLB_TOP,639-03409,EXTREME)	EEEE_HP26	NO	EXTREME

SOC

PART#	QTY	DESCRIPTION	REFERENCE DESIGNATOR(S)	CRITICAL	BOM OPTION
339S00358	1	SKYE+3GB, B0, M, DEV	U1000	CRITICAL	COMMON

PART NUMBER	ALTERNATE FOR PART NUMBER	BOM OPTION	REF DES	COMMENTS:
339S00359	339S00358	BOM_TABLE_ALTS	U1000	DDR-H,3G, B0
339S00360	339S00358	BOM_TABLE_ALTS	U1000	DDR-S-20,3G, B0
339S00361	339S00358	BOM_TABLE_ALTS	U1000	DDR-S-18,3G, B0

NAND

Ultimate

PART#	QTY	DESCRIPTION	REFERENCE DESIGNATOR(S)	CRITICAL	BOM OPTION
335S00287	1	HYNIX, 3DV3, ULTIMATE	U2600	CRITICAL	ULTIMATE

PART NUMBER	ALTERNATE FOR PART NUMBER	BOM OPTION	REF DES	COMMENTS:
335S00284	335S00287	BOM_TABLE_ALTS	U2600	TOSHIBA, 1Z, ULTIMATE
335S00285	335S00287	BOM_TABLE_ALTS	U2600	TOSHIBA, BICS3, ULTIMATE
335S00286	335S00287	BOM_TABLE_ALTS	U2600	SANDISK, BICS3, ULTIMATE
335S00288	335S00287	BOM_TABLE_ALTS	U2600	SAMSUNG, 3DV4, ULTIMATE

Extreme

PART#	QTY	DESCRIPTION	REFERENCE DESIGNATOR(S)	CRITICAL	BOM OPTION
335S00240	1	HYNIX, 3DV3, EXTREME	U2600	CRITICAL	EXTREME

PART NUMBER	ALTERNATE FOR PART NUMBER	BOM OPTION	REF DES	COMMENTS:
335S00228	335S00240	BOM_TABLE_ALTS	U2600	TOSHIBA, BICS3, EXTREME
335S00247	335S00240	BOM_TABLE_ALTS	U2600	SANDISK, BICS3, EXTREME
335S00276	335S00240	BOM_TABLE_ALTS	U2600	SAMSUNG, 3DV4, EXTREME

Global Capacitors

PART NUMBER	ALTERNATE FOR PART NUMBER	BOM OPTION	REF DES	COMMENTS:
138S00148	138S00149	BOM_TABLE_ALTS	ALL	0402-3T,10.5uF@1V, Kyocera
138S00150	138S00149	BOM_TABLE_ALTS	ALL	0402-3T,10.5uF@1V, SEMCO
138S00151	138S00149	BOM_TABLE_ALTS	ALL	0402-3T,10.5uF@1V, TY

CRITICAL PART#	COMMENT
138S00149	0402-3T,10.5uF@1V

PART NUMBER	ALTERNATE FOR PART NUMBER	BOM OPTION	REF DES	COMMENTS:
138S00143	138S00144	BOM_TABLE_ALTS	ALL	0402,16uF@1V, Kyocera
138S00163	138S00144	BOM_TABLE_ALTS	ALL	0402,16uF@1V, Taiyo

CRITICAL PART#	COMMENT
138S00144	0402,16uF@1V

PART NUMBER	ALTERNATE FOR PART NUMBER	BOM OPTION	REF DES	COMMENTS:
138S00138	138S00139	BOM_TABLE_ALTS	ALL	0201,3uF@1V, Kyocera
138S00164	138S00139	BOM_TABLE_ALTS	ALL	0201,3uF@1V, Taiyo

CRITICAL PART#	COMMENT
138S00139	0201,3uF@1V

PART NUMBER	ALTERNATE FOR PART NUMBER	BOM OPTION	REF DES	COMMENTS:
138S00145	138S00146	BOM_TABLE_ALTS	ALL	0402,5.1uF@3V, Kyocera
138S00165	138S00146	BOM_TABLE_ALTS	ALL	0402,5.1uF@3V, Taiyo

CRITICAL PART#	COMMENT
138S00146	0402,5.1uF@3V

PART NUMBER	ALTERNATE FOR PART NUMBER	BOM OPTION	REF DES	COMMENTS:
138S00140	138S00141	BOM_TABLE_ALTS	ALL	0201,1.1uF@3V, Kyocera
138S00142	138S00141	BOM_TABLE_ALTS	ALL	0201,1.1uF@3V, SEMCO
138S00166	138S00141	BOM_TABLE_ALTS	ALL	0201,1.1uF@3V, Taiyo

CRITICAL PART#	COMMENT
138S00141	0201,1.1uF@3V

Global Ferrites

PART NUMBER	ALTERNATE FOR PART NUMBER	BOM OPTION	REF DES	COMMENTS:
155S00194	155S0610	BOM_TABLE_ALTS	ALL	FERR BD, 1500HM, TDK
155S00200	155S0610	BOM_TABLE_ALTS	ALL	FERR BD, 1500HM, TY

CRITICAL PART#	COMMENT
155S0610	FERR BD, 1500HM, 01005

Global R/C Alternates

PART NUMBER	ALTERNATE FOR PART NUMBER	BOM OPTION	REF DES	COMMENTS:
118S0764	118S0717	BOM_TABLE_ALTS	ALL	RES, 3.92K, 0.1%, 0201
138S0648	138S0652	BOM_TABLE_ALTS	ALL	CAP,X5R,4.7UF,6.3V,0.65MM,0402,TAIYO
138S0739	138S0706	BOM_TABLE_ALTS	ALL	CAP,CER,X5R,0.22UF,20%,6.3V,20%
132S0436	132S0400	BOM_TABLE_ALTS	ALL	CAP,CER,X5R,0.22UF,20%,6.3V,01005
138S00049	138S0831	BOM_TABLE_ALTS	ALL	CAP,CER,X5R,2.2UF,20%,6.3V,0201

CRITICAL PART#	COMMENT
118S0717	RES, 3.92K, 0.1%, 0201
138S0652	CAP,X5R,4.7UF,6.3V,0.65MM,0402
138S0706	CAP,CER,X5R,0.22UF,20%,6.3V,20%
132S0400	CAP,CER,X5R,0.22UF,20%,6.3V,01005
138S0831	CAP,CER,X5R,2.2UF,20%,6.3V,0201

Global Inductors

PART NUMBER	ALTERNATE FOR PART NUMBER	BOM OPTION	REF DES	COMMENTS:
152S00710	152S00617	BOM_TABLE_ALTS	ALL	IND,MLD,0.1UH,20%,6.1A,29MOHM,H=.65,1608
152S00712	152S00620	BOM_TABLE_ALTS	ALL	IND,MLD,0.1UH,20%,7.2A,17MOHM,H=0.8,2012
152S00713	152S00621	BOM_TABLE_ALTS	ALL	IND,MLD,0.47UH,20%,3.5A,53MO,H=.65,2012
152S00714	152S00622	BOM_TABLE_ALTS	ALL	IND,MLD,1.0UH,20%,2.1A,160MO,H=.65,2012
152S00716	152S00626	BOM_TABLE_ALTS	ALL	IND,MLD,1.5UH,20%,1.1A,160MO,H=.65,2012
152S00717	152S00631	BOM_TABLE_ALTS	ALL	IND,MLD,1.0UH,20%,2.5A,78MO,H=0.8,2012
152S00718	152S00632	BOM_TABLE_ALTS	ALL	IND,MLD,1.0UH,20%,3.2A,60MO,H=0.8,2016
152S00720	152S00640	BOM_TABLE_ALTS	ALL	IND,MLD,0.47UH,3.8A,55MO,H=0.65MM,2012
152S00721	152S00641	BOM_TABLE_ALTS	ALL	IND,MLD,0.47UH,4A,48MO,H=0.8MM,2012
152S00715	152S00623	BOM_TABLE_ALTS	ALL	IND,MLD,1UH,3.6A,60MO,H=0.8MM,2016
152S00653	152S00651	BOM_TABLE_ALTS	ALL	IND,1.2UH,3A,2016,0.65Z
152S00649	152S00650	BOM_TABLE_ALTS	L3340,L3341	IND,0.47UH,6.6A,3225,0.8Z

CRITICAL PART#	COMMENT
152S00617	IND,MLD,0.1UH,20%,6.1A,29MOHM,H=.65,1608
152S00620	IND,MLD,0.1UH,20%,7.2A,17MOHM,H=0.8,2012
152S00621	IND,MLD,0.47UH,20%,3.5A,53MO,H=.65,2012
152S00622	IND,MLD,1.0UH,20%,2.1A,160MO,H=.65,2012
152S00626	IND,MLD,1.5UH,20%,1.1A,160MO,H=.65,2012
152S00631	IND,MLD,1.0UH,20%,2.5A,78MO,H=0.8,2012
152S00632	IND,MLD,1.0UH,20%,3.2A,60MO,H=0.8,2016
152S00640	IND,MLD,0.47UH,3.8A,55MO,H=0.65MM,2012
152S00641	IND,MLD,0.47UH,4A,48MO,H=0.8MM,2012
152S00623	IND,MLD,1UH,3.6A,60MO,H=0.8MM,2016
152S00651	IND,1.2UH, 3A, 2016, 0.65Z
152S00650	IND,0.47UH,6.6A,3225,0.8Z

XTAL Alternate

PART NUMBER	ALTERNATE FOR PART NUMBER	BOM OPTION	REF DES	COMMENTS:
197S0612	197S0446	BOM_TABLE_ALTS	Y1000	XTAL, 24M, 1612

CRITICAL PART#	COMMENT
197S0446	XTAL, 24M, 1612

Multi-Vendor Criticals

CRITICAL PART#	COMMENT
377S0106	SUPPR,TRANS,VARISTOR,12V,33PF,01005
197S0446	XTAL,24MHZ,30PPM,9.5PF,60 OHM MAX,1612
155S0576	FERR BD,10 OHM,50%,750MA,0.07 DCR,01005
155S00168	FLTR,NOISE,65 OHMZ,3.4OHM,0.7-2GHZ,0605
138S0979	CAP,CER,X5R,10UF,20%,10V,0402,H=0.65MM
138S0692	CAP,CER,X5R,1UF,20%,6.3V,0201
138S0683	CAP,CER,X5R,1UF,10%,25V,0402
138S0652	CAP,CER,X5R,4.7UF,20%,6.3V,H=0.65MM,0402
138S00070	CAP,X5R,4.7UF,20%,25V,0402
138S00014	CAP,CER,1UF,20%,16V,X5R,0201,H=0.39MM
132S0664	CAP,CER,0.047UF,10%,25V,X5R,0201
132S0663	CAP,CER,X5R,1UF,10%,25V,0402
132S0534	CAP,CER,X5R,0.1UF,10%,25V,0201
132S0436	CAP,CER,X5R,0.22UF,20%,6.3V,01005
132S0396	CAP,CER,X5R,1000PF,10%,10V,01005
132S0316	CAP,CER,X5R,0.1UF,20%,6.3V,01005
132S0304	CAP,CER,X5R,0.22UF,20%,6.3V,0201
132S0296	CAP,CER,X5R,1000PF,10%,6.3V,01005
132S0318	CAP,CER,X5R,820PF,10%,10V,01005

CRITICAL PART#	COMMENT
132S0288	CAP,CER,X5R,0.1UF,10%,16V,0201
132S0275	CAP,CER,X5R,470PF,10%,10V,01005
132S0249	CAP,CER,X7R,220PF,10%,10V,01005
132S0245	CAP,CER,X5R,0.01UF,10%,6.3V,01005
132S00093	CAP,X5R,0.022UF,20%,6.3V,01005
132S00025	CAP,CER,X5R,0.047UF,20%,6.3V,01005
132S00008	CAP,CER,0.1UF,10%,50V,X7R,0402
131S0883	CAP,CER,NP0/C0G,220PF,2%,50V,0201
131S0804	CAP,CER,27PF,5%,C0G,25V,0201
131S0307	CAP,CER,NP0/C0G,100PF,5%,16V,01005
131S0225	CAP,CER,NP0/C0G,15PF,5%,16V,01005
131S0223	CAP,CER,NP0/C0G,27PF,5%,16V,01005
131S0220	CAP,CER,NP0/C0G,12PF,5%,16V,01005
131S0216	CAP,CER,NP0/C0G,47PF,5%,16V,01005
131S00053	CAP,CER,C0G,220PF,5%,10V,01005
118S00068	RES,MF,1.3 MOHM,1%,200PPM,1/20W,0201
117S0055	RES,MF,1/20W,2M OHM,5,0201,SMD
107S0257	THERMISTOR,NTC,10K OHM,1%,B=3435,01005

Soft-Term Cap Sub BOMs

PART#	QTY	DESCRIPTION	REFERENCE DESIGNATOR(S)	CRITICAL	BOM OPTION
685-00155	1	SUBBOM,MLB,TOP,CAP,TYPICAL,X891	SUBBOM_CAP	CRITICAL	COMMON

Agnes Input

PART#	QTY	DESCRIPTION	REFERENCE DESIGNATOR(S)	CRITICAL	BOM OPTION
138S00159	4	CAP,SOFT-TERM,2.2UF,6.3V,0201,KYOCERA	C2970,C2971,C2980,C2981	CRITICAL	SOFT_CAP
138S0831	4	CAP,TYPICAL,2.2UF,6.3V,0201,MURATA	C2970,C2971,C2980,C2981	CRITICAL	TYPICAL_CAP

Agnes Output

PART#	QTY	DESCRIPTION	REFERENCE DESIGNATOR(S)	CRITICAL	BOM OPTION
138S00159	9	CAP,SOFT-TERM,2.2UF,6.3V,0201,KYOCERA	C2906,C2961,C2965,C2966,C2967,C2968,C2963,C2963,C2964	CRITICAL	SOFT_CAP
138S0831	9	CAP,TYPICAL,2.2UF,6.3V,0201,MURATA	C2906,C2961,C2965,C2966,C2967,C2968,C2963,C2963,C2964	CRITICAL	TYPICAL_CAP

Sensors

PART#	QTY	DESCRIPTION	REFERENCE DESIGNATOR(S)	CRITICAL	BOM OPTION
138S00159	2	CAP,SOFT-TERM,2.2UF,6.3V,0201,KYOCERA	C3602,C3622	CRITICAL	SOFT_CAP
138S0831	2	CAP,TYPICAL,2.2UF,6.3V,0201,MURATA	C3602,C3622	CRITICAL	TYPICAL_CAP

RCAM B2Bs

PART#	QTY	DESCRIPTION	REFERENCE DESIGNATOR(S)	CRITICAL	BOM OPTION
138S00159	3	CAP,SOFT-TERM,2.2UF,6.3V,0201,KYOCERA	C3909,C3925,C4025	CRITICAL	SOFT_CAP
138S0831	3	CAP,TYPICAL,2.2UF,6.3V,0201,MURATA	C3909,C3925,C4025	CRITICAL	TYPICAL_CAP

Strobe B2B

PART#	QTY	DESCRIPTION	REFERENCE DESIGNATOR(S)	CRITICAL	BOM OPTION
138S00159	1	CAP,SOFT-TERM,2.2UF,6.3V,0201,KYOCERA	C4303	CRITICAL	SOFT_CAP
138S0831	1	CAP,TYPICAL,2.2UF,6.3V,0201,MURATA	C4303	CRITICAL	TYPICAL_CAP

Audio

PART#	QTY	DESCRIPTION	REFERENCE DESIGNATOR(S)	CRITICAL	BOM OPTION
138S00159	2	CAP,SOFT-TERM,2.2UF,6.3V,0201,KYOCERA	C4809,C4805	CRITICAL	SOFT_CAP
138S0831	2	CAP,TYPICAL,2.2UF,6.3V,0201,MURATA	C4809,C4805	CRITICAL	TYPICAL_CAP

Pearl B2B

PART#	QTY	DESCRIPTION	REFERENCE DESIGNATOR(S)	CRITICAL	BOM OPTION
138S00159	1	CAP,SOFT-TERM,2.2UF,6.3V,0201,KYOCERA	C4613	CRITICAL	SOFT_CAP
138S0831	1	CAP,TYPICAL,2.2UF,6.3V,0201,MURATA	C4613	CRITICAL	TYPICAL_CAP

Acorn

PART#	QTY	DESCRIPTION	REFERENCE DESIGNATOR(S)	CRITICAL	BOM OPTION
138S00160	2	CAP,SOFT-TERM,10UF,10V,0402,MURATA	C5641,C5653	CRITICAL	SOFT_CAP
138S0979	2	CAP,TYPICAL,10UF,10V,0402,MUR/KYO	C5641,C5653	CRITICAL	TYPICAL_CAP

CODEC

PART#	QTY	DESCRIPTION	REFERENCE DESIGNATOR(S)	CRITICAL	BOM OPTION
138S00160	2	CAP,SOFT-TERM,10UF,10V,0402,MURATA	C4811,C4808	CRITICAL	SOFT_CAP
138S0979	2	CAP,TYPICAL,10UF,10V,0402,MUR/KYO	C4811,C4808	CRITICAL	TYPICAL_CAP

Ansel

PART#	QTY	DESCRIPTION	REFERENCE DESIGNATOR(S)	CRITICAL	BOM OPTION
138S00160	1	CAP,SOFT-TERM,10UF,10V,0402,MURATA	C3710	CRITICAL	SOFT_CAP
138S0979	1	CAP,TYPICAL,10UF,10V,0402,MUR/KYO	C3710	CRITICAL	TYPICAL_CAP

PART NUMBER	ALTERNATE FOR PART NUMBER	BOM OPTION	REF DES	COMMENTS:
685-00156	685-00155	BOM_TABLE_ALTS	SUBBOM_CAP	SUBBOM,MLB,TOP,CAP,SOFT,X891

PAGE TITLE

SYSTEM:BOM Tables

Apple Inc.

DRAWING NUMBER 051-02221

SIZE D

REVISION 9.0.0

BRANCH evt-1

PAGE 2 OF 80

SHEET 2 OF 51

NOTICE OF PROPRIETARY PROPERTY:
THE INFORMATION CONTAINED HEREIN IS THE PROPRIETARY PROPERTY OF APPLE INC.
THE POSESSOR AGREES TO THE FOLLOWING:
I TO MAINTAIN THIS DOCUMENT IN CONFIDENCE
II NOT TO REPRODUCE OR COPY IT
III NOT TO REVEAL OR PUBLISH IT IN WHOLE OR PART
IV ALL RIGHTS RESERVED

PDF Watermark Remover DEMO : Purchase from www.PDFWatermarkRemover.com to remove the watermark

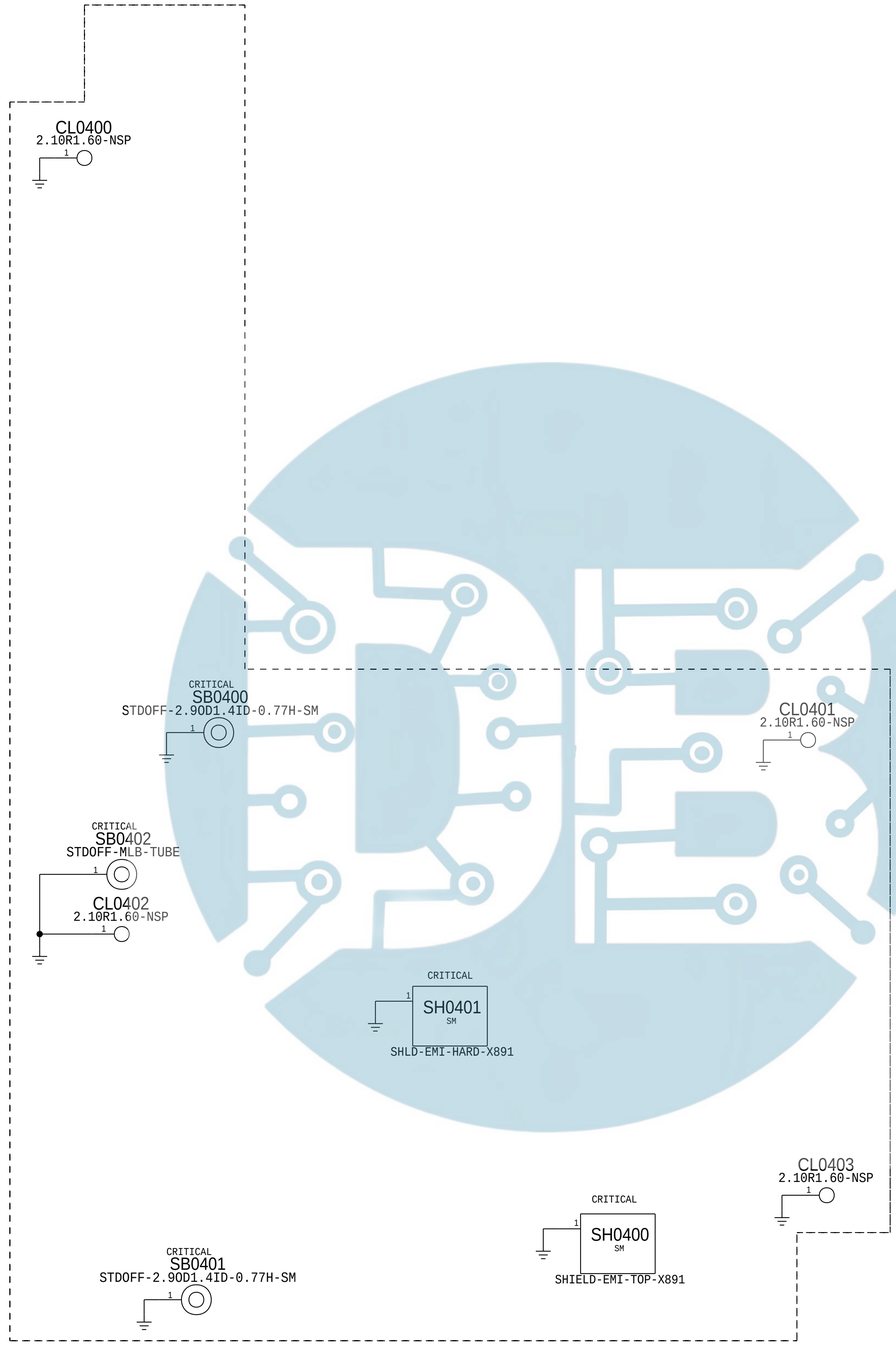

FIDUCIALS

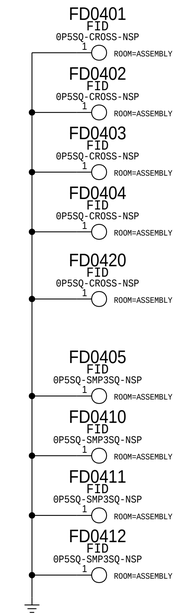

PAGE TITLE
SYSTEM: Mechanical Components

Apple Inc.

DRAWING NUMBER 051-02221
SIZE D
REVISION 9.0.0
BRANCH evt-1
PAGE 4 OF 80
SHEET 3 OF 51

NOTICE OF PROPRIETARY PROPERTY:
THE INFORMATION CONTAINED HEREIN IS THE PROPRIETARY PROPERTY OF APPLE INC.
THE POSESSOR AGREES TO THE FOLLOWING:
I TO MAINTAIN THIS DOCUMENT IN CONFIDENCE
II NOT TO REPRODUCE OR COPY IT
III NOT TO REVEAL OR PUBLISH IT IN WHOLE OR PART
IV ALL RIGHTS RESERVED

PDF Watermark Remover DEMO : Purchase from www.PDFWatermarkRemover.com to remove the watermark

Test Points

POWER

Net	Part	Footer
PP_ROMEO_DENSE_ANODE	TP0540 P2MM-NSM	ROOM=TEST
PP_ROMEO_CATHODE	TP0543 P2MM-NSM	ROOM=TEST

SOC Debug

Net	Part	Footer
AP_TO_PMU_TEST_CLKOUT	PP0500 P2MM-NSM	ROOM=TEST
BOARD_ID0	PP0501 P2MM-NSM	ROOM=TEST
AP_TO_FCAM_SHUTDOWN_L	PP0502 P2MM-NSM	ROOM=TEST
AP_DEBUG3	PP0503 P2MM-NSM	ROOM=TEST
DFU_STATUS	PP0504 P2MM-NSM	ROOM=TEST
PMU_TO_AP_PRE_UVLO_L	PP0505 P2MM-NSM	ROOM=TEST
AP_TO_PMU_SOCHOT_L	PP0506 P2MM-NSM	ROOM=TEST

SOC CPU/GPU

Net	Part	Net	Part	Footer
PP_GPU	XW0510 SHORT-10L-0.05MM-SM	PP_GPU_LVCC		
PP_CPU_PCORE	XW0511 SHORT-10L-0.05MM-SM	PP_CPU_PCORE_LVCC		
AP_CPU_PCORE_SENSE			PP0512 P2MM-NSM	ROOM=TEST
AP_VDD_GPU_SENSE			PP0513 P2MM-NSM	ROOM=TEST
TP_SOC_SENSE			PP0514 P2MM-NSM	ROOM=TEST
TP_VSS_CPU_SENSE			PP0515 P2MM-NSM	ROOM=TEST
TP_VSS_SENSE			PP0516 P2MM-NSM	ROOM=TEST

PMU

Net	Part	Footer
AOP_TO_DDR_SLEEP1_READY	PP0520 P2MM-NSM	ROOM=TEST
SPMI_PMU_BI_PMGR_SDATA	PP0521 P2MM-NSM	ROOM=TEST
PMU_TO_AP_HYDRA_ACTIVE_READY	PP0522 P2MM-NSM	ROOM=TEST

PCIE Refclk

Net	Part	Footer
90_PCIE_AP_TO_NAND_REFCLK_P	PP0530 P2MM-NSM	ROOM=TEST
90_PCIE_AP_TO_NAND_REFCLK_N	PP0531 P2MM-NSM	ROOM=TEST

Probe Points

Sensors

Net	Part	Footer
SPI_AOP_TO_IMU_SCLK	PP0540 P2MM-NSM	ROOM=TEST
SPI_AOP_TO_IMU_MOSI	PP0541 P2MM-NSM	ROOM=TEST
SPI_IMU_TO_AOP_MISO	PP0542 P2MM-NSM	ROOM=TEST
ACCEL_GYRO_TO_AOP_DATARDY	PP0544 P2MM-NSM	ROOM=TEST
ACCEL_GYRO_TO_AOP_INT	PP0545 P2MM-NSM	ROOM=TEST
COMPASS_TO_AOP_INT	PP0546 P2MM-NSM	ROOM=TEST
PHOSPHORUS_TO_AOP_INT	PP0547 P2MM-NSM	ROOM=TEST

Hydra VBUS

Net	Part	Footer
HYDRA_TO_TIGRIS_VBUS1_VALID_L	PP0550 P2MM-NSM	ROOM=TEST

NAND

Net	Part	Footer
SWD_AP_BI_NAND_SWDIO	PP0560 P2MM-NSM	ROOM=TEST
SWD_AOP_TO_MANY_SWCLK	PP0561 P2MM-NSM	ROOM=TEST
SPI_S4E_TO_AP_MISO_BOOT_CONFIG2	PP0562 P2MM-NSM	ROOM=TEST
NAND_ANI1_VREF	PP0563 P2MM-NSM	ROOM=TEST
NAND_ANI0_VREF	PP0564 P2MM-NSM	ROOM=TEST

Rigel

Net	Part	Footer
CAMPMU_TO_RIGEL_ENABLE	PP0570 P2MM-NSM	ROOM=TEST
RIGEL_TO_ISP_INT	PP0571 P2MM-NSM	ROOM=TEST

Net	Part	Footer
PDM_CODEC_TO_ARC_CLK	PP0582 P2MM-NSM	ROOM=TEST
PDM_CODEC_TO_ARC_DATA	PP0583 P2MM-NSM	ROOM=TEST
AP_BI_CCG2_SWDIO	PP0586 P2MM-NSM	ROOM=TEST
AP_TO_CCG2_SWCLK	PP0587 P2MM-NSM	ROOM=TEST

SOC I2C1_AOP

Net	Part	Footer
I2C1_AOP_SCL	PP0590 P2MM-NSM	ROOM=TEST
I2C1_AOP_SDA	PP0591 P2MM-NSM	ROOM=TEST

CCG2

Net	Part	Footer
CCG2_TO_SMC_INT_L	PP0592 P2MM-NSM	ROOM=TEST

PAGE TITLE	SYSTEM: Testpoints (Top)
Apple Inc.	DRAWING NUMBER 051-02221
	SIZE D
	REVISION 9.0.0
	BRANCH evt-1
	PAGE 5 OF 80
	SHEET 4 OF 51

NOTICE OF PROPRIETARY PROPERTY:
THE INFORMATION CONTAINED HEREIN IS THE PROPRIETARY PROPERTY OF APPLE INC.
THE POSESSOR AGREES TO THE FOLLOWING:
I TO MAINTAIN THIS DOCUMENT IN CONFIDENCE
II NOT TO REPRODUCE OR COPY IT
III NOT TO REVEAL OR PUBLISH IT IN WHOLE OR PART
IV ALL RIGHTS RESERVED

PDF Watermark Remover DEMO : Purchase from www.PDFWatermarkRemover.com to remove the watermark

BOOTSTRAPPING:BOARD REV
BOARD ID
BOOT CONFIG

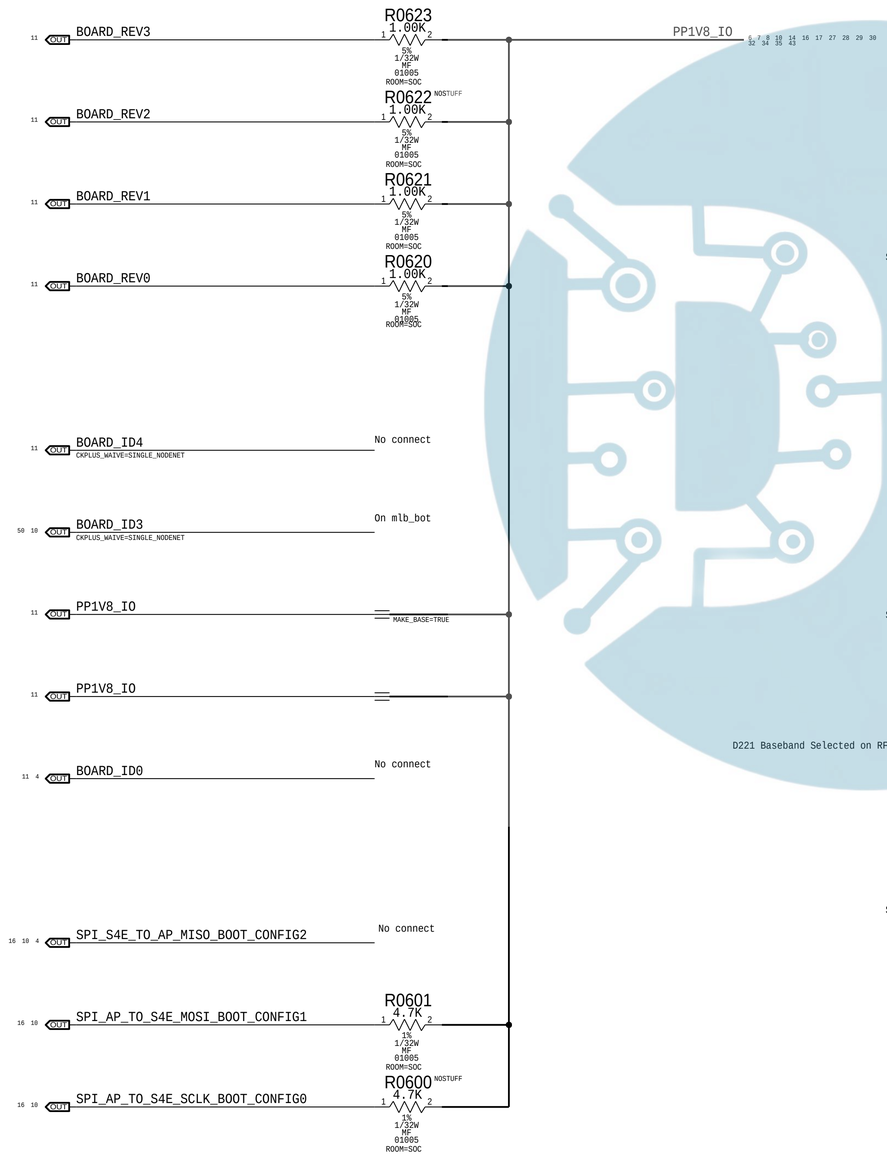

PAGE TITLE	BOOTSTRAPPING
Apple Inc.	DRAWING NUMBER 051-02221 · SIZE D
	REVISION 9.0.0
	BRANCH evt-1
	PAGE 6 OF 80
	SHEET 5 OF 51

NOTICE OF PROPRIETARY PROPERTY:
THE INFORMATION CONTAINED HEREIN IS THE PROPRIETARY PROPERTY OF APPLE INC.
THE POSESSOR AGREES TO THE FOLLOWING:
I TO MAINTAIN THIS DOCUMENT IN CONFIDENCE
II NOT TO REPRODUCE OR COPY IT
III NOT TO REVEAL OR PUBLISH IT IN WHOLE OR PART
IV ALL RIGHTS RESERVED

PDF Watermark Remover DEMO : Purchase from www.PDFWatermarkRemover.com to remove the watermark

SOC - USB, JTAG, XTAL

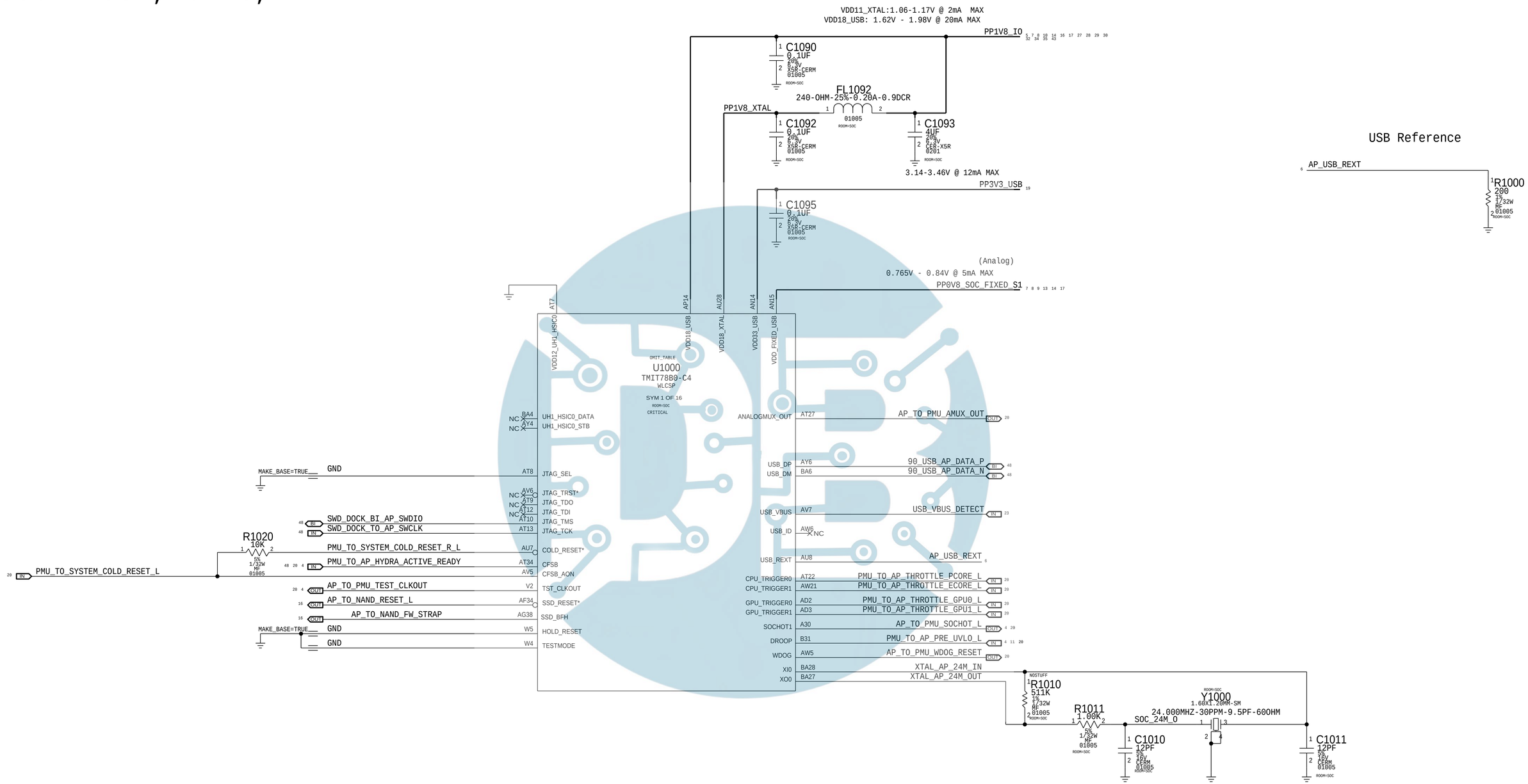

PAGE TITLE

SOC: JTAG,USB,XTAL

Apple Inc.

DRAWING NUMBER 051-02221 SIZE D

REVISION 9.0.0

BRANCH evt-1

PAGE 10 OF 80

SHEET 6 OF 51

NOTICE OF PROPRIETARY PROPERTY:

THE INFORMATION CONTAINED HEREIN IS THE PROPRIETARY PROPERTY OF APPLE INC.
THE POSESSOR AGREES TO THE FOLLOWING:

I TO MAINTAIN THIS DOCUMENT IN CONFIDENCE

II NOT TO REPRODUCE OR COPY IT

III NOT TO REVEAL OR PUBLISH IT IN WHOLE OR PART

IV ALL RIGHTS RESERVED

PDF Watermark Remover DEMO : Purchase from www.PDFWatermarkRemover.com to remove the watermark

SOC - PCIE INTERFACES

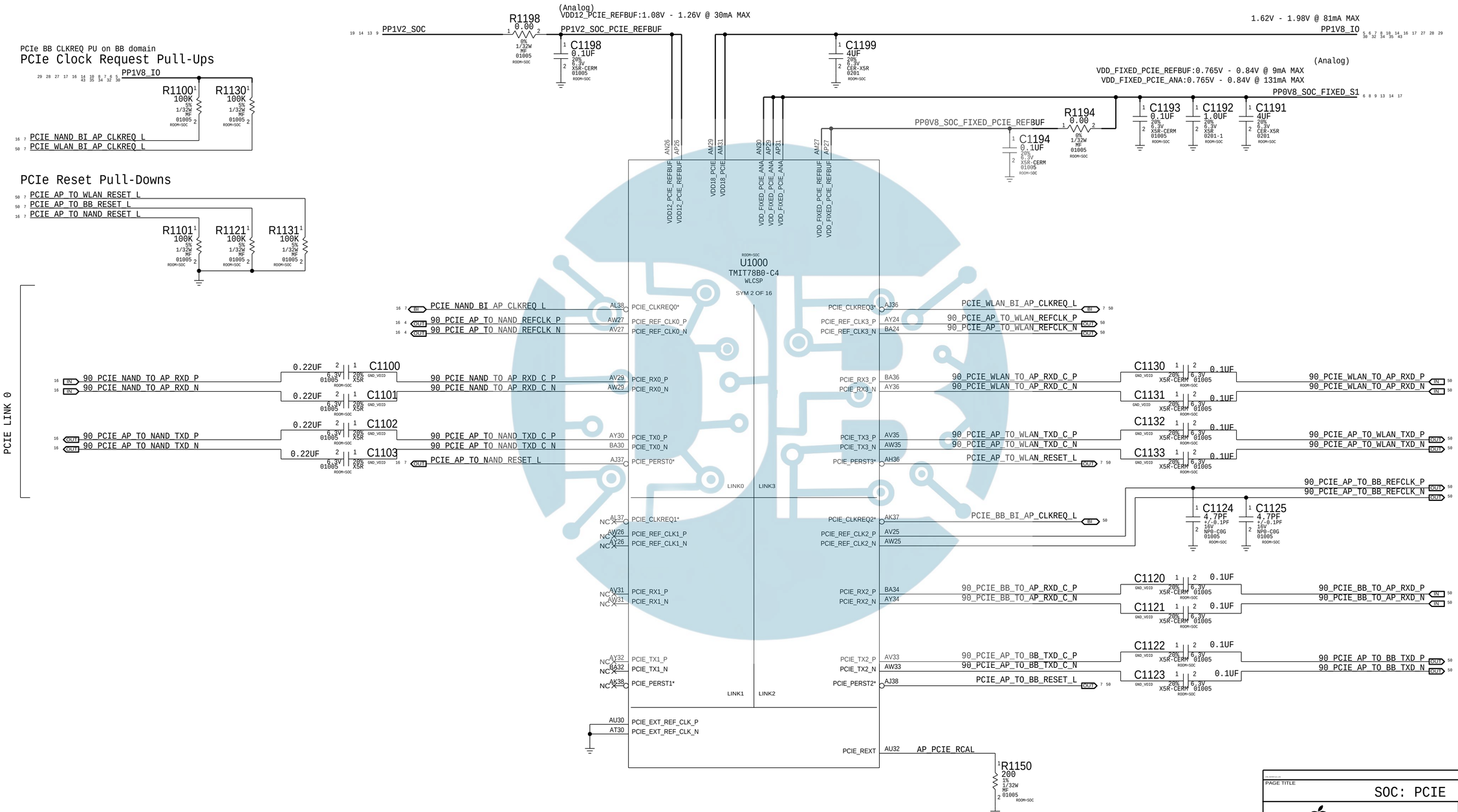

PAGE TITLE

SOC: PCIE

Apple Inc.

DRAWING NUMBER 051-02221 SIZE D

REVISION 9.0.0

BRANCH evt-1

PAGE 11 OF 80

SHEET 7 OF 51

NOTICE OF PROPRIETARY PROPERTY:

THE INFORMATION CONTAINED HEREIN IS THE PROPRIETARY PROPERTY OF APPLE INC.
THE POSESSOR AGREES TO THE FOLLOWING:
I TO MAINTAIN THIS DOCUMENT IN CONFIDENCE
II NOT TO REPRODUCE OR COPY IT
III NOT TO REVEAL OR PUBLISH IT IN WHOLE OR PART
IV ALL RIGHTS RESERVED

PDF Watermark Remover DEMO : Purchase from www.PDFWatermarkRemover.com to remove the watermark

SOC - MIPI & ISP INTERFACES

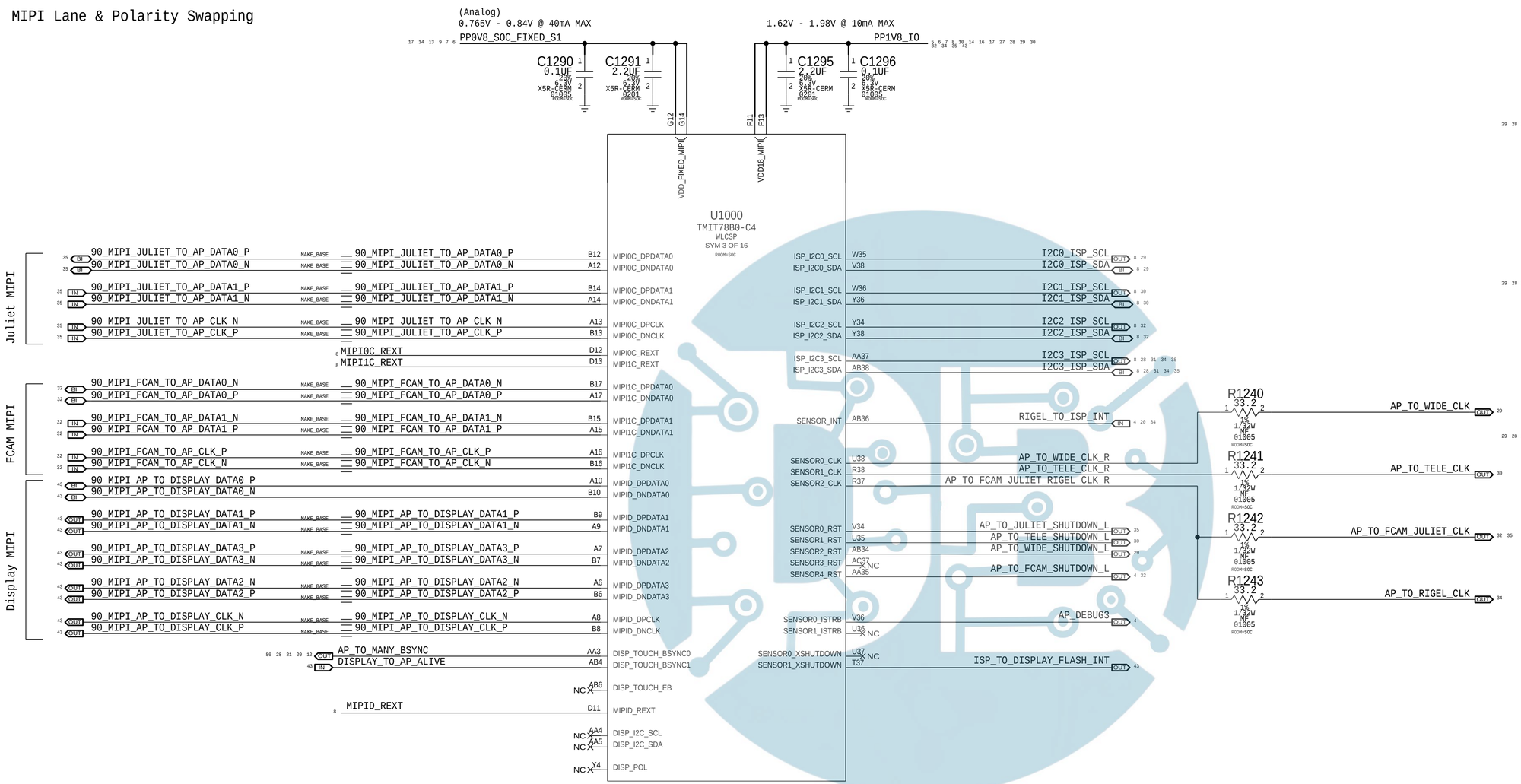

MIPI Reference

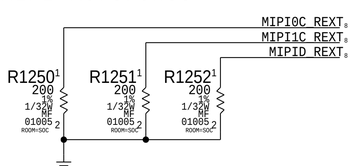

PAGE TITLE
SOC: MIPI & ISP

Apple Inc.

DRAWING NUMBER 051-02221 SIZE D
REVISION 9.0.0
BRANCH evt-1
PAGE 12 OF 80
SHEET 8 OF 51

NOTICE OF PROPRIETARY PROPERTY:
THE INFORMATION CONTAINED HEREIN IS THE PROPRIETARY PROPERTY OF APPLE INC.
THE POSESSOR AGREES TO THE FOLLOWING:
I TO MAINTAIN THIS DOCUMENT IN CONFIDENCE
II NOT TO REPRODUCE OR COPY IT
III NOT TO REVEAL OR PUBLISH IT IN WHOLE OR PART
IV ALL RIGHTS RESERVED

PDF Watermark Remover DEMO : Purchase from www.PDFWatermarkRemover.com to remove the watermark

SOC - LPDP

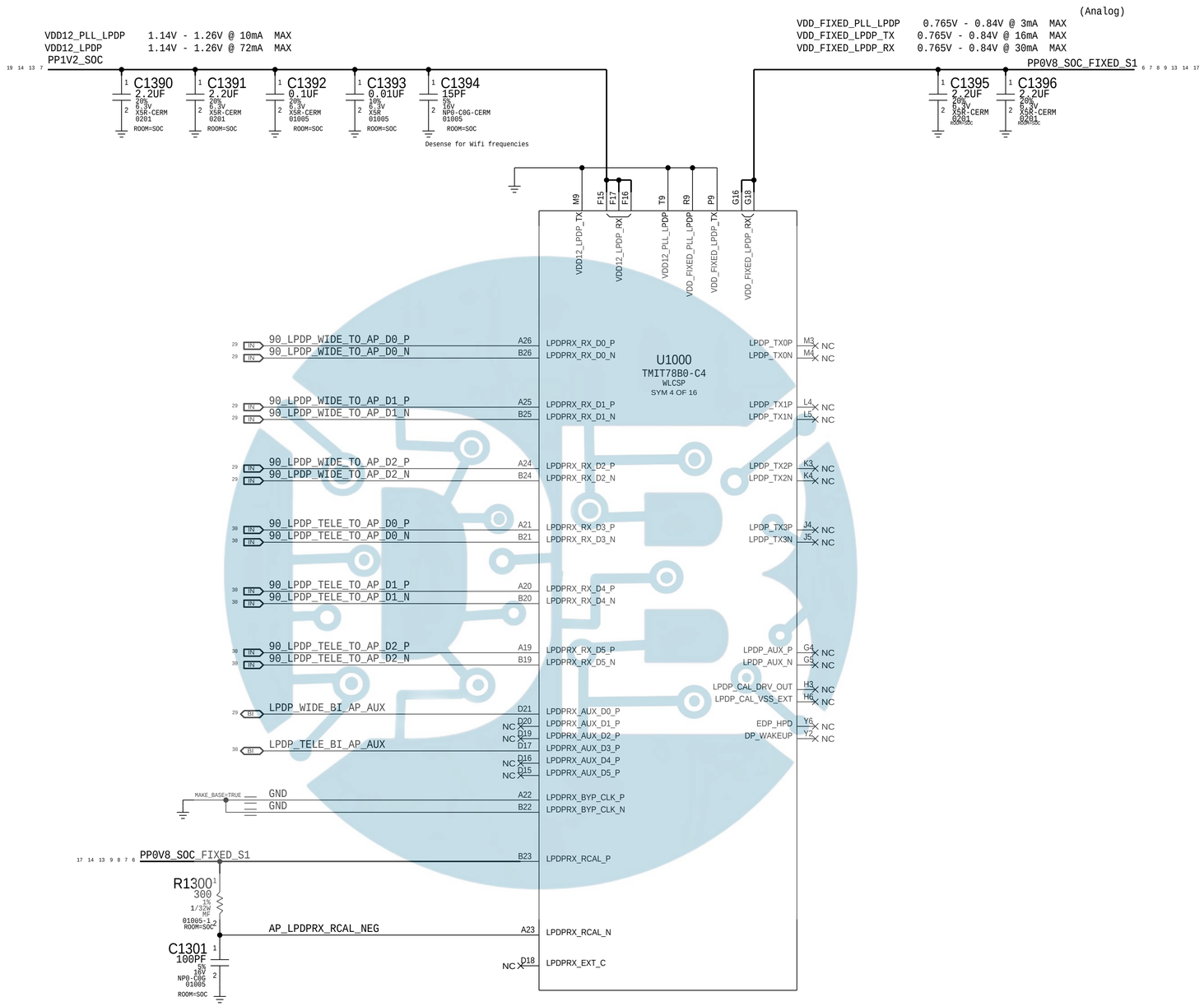

PAGE TITLE

SOC: LPDP

Apple Inc.

DRAWING NUMBER 051-02221 SIZE D

REVISION 9.0.0

BRANCH evt-1

PAGE 13 OF 80

SHEET 9 OF 51

NOTICE OF PROPRIETARY PROPERTY:
THE INFORMATION CONTAINED HEREIN IS THE PROPRIETARY PROPERTY OF APPLE INC.
THE POSESSOR AGREES TO THE FOLLOWING:
I TO MAINTAIN THIS DOCUMENT IN CONFIDENCE
II NOT TO REPRODUCE OR COPY IT
III NOT TO REVEAL OR PUBLISH IT IN WHOLE OR PART
IV ALL RIGHTS RESERVED

PDF Watermark Remover DEMO : Purchase from www.PDFWatermarkRemover.com to remove the watermark

SOC - SERIAL INTERFACES

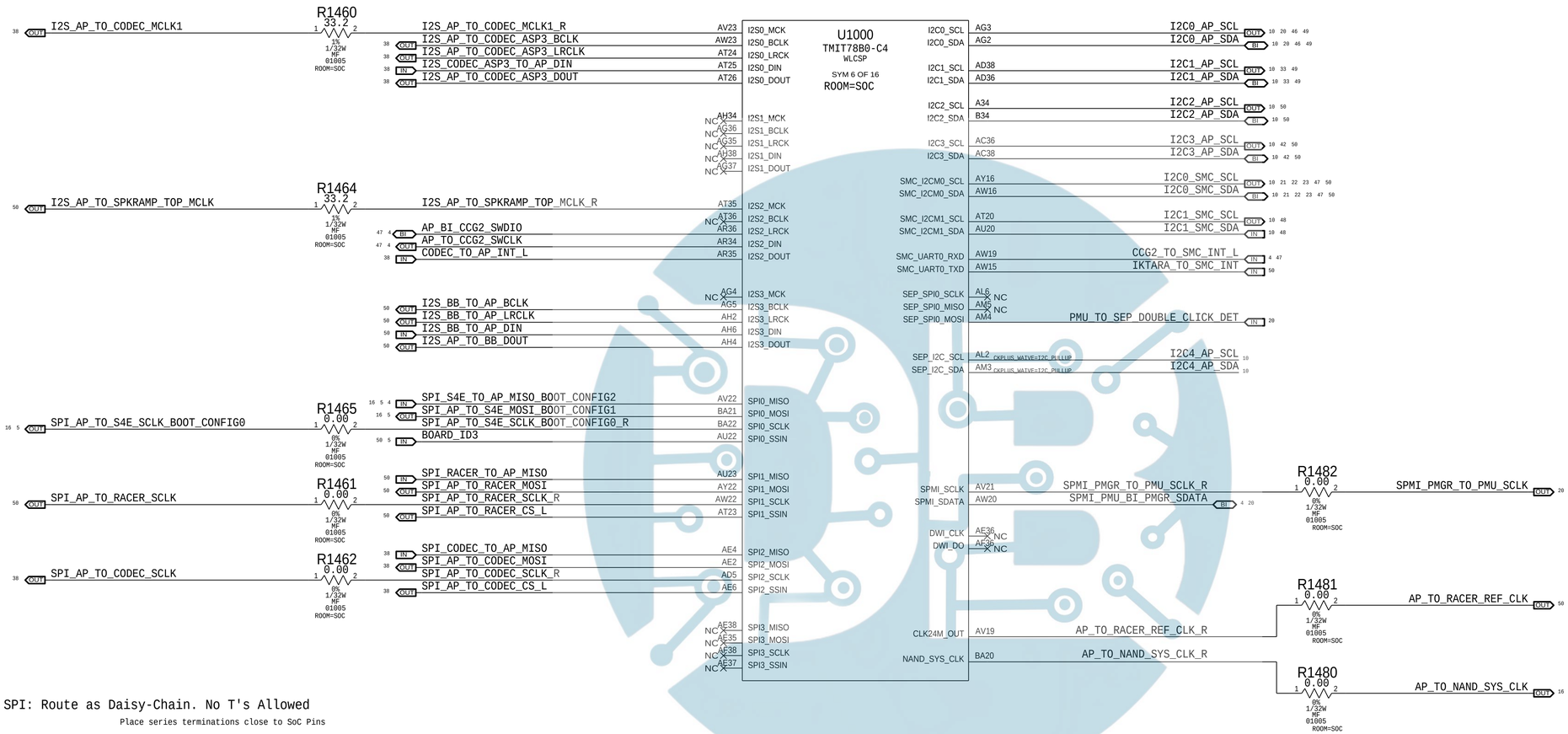

SPI: Route as Daisy-Chain. No T's Allowed

Place series terminations close to SoC Pins

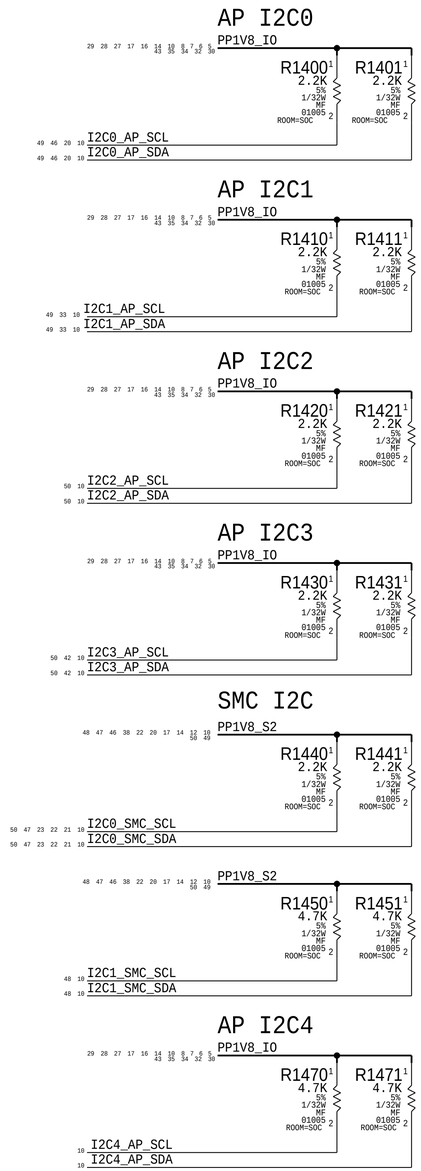

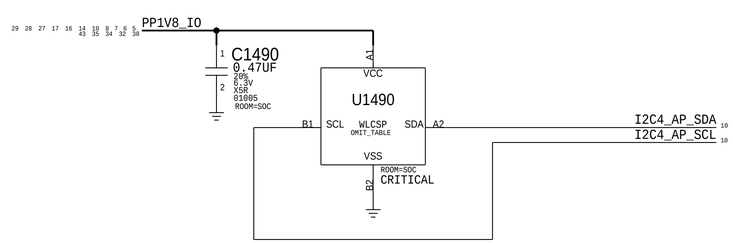

PART#	QTY	DESCRIPTION	REFERENCE DESIGNATOR(S)	CRITICAL	BOM OPTION
335S00234	1	WLCSP	U1490	CRITICAL	COMMON

PART NUMBER	ALTERNATE FOR PART NUMBER	BOM OPTION	REF DES	COMMENTS:
335S00233	335S00234	BOM_TABLE_ALTS	U1490	U1490

PAGE TITLE
SOC: Serial

Apple Inc.

DRAWING NUMBER 051-02221 SIZE D
REVISION 9.0.0
BRANCH evt-1
PAGE 14 OF 80
SHEET 10 OF 51

NOTICE OF PROPRIETARY PROPERTY:
THE INFORMATION CONTAINED HEREIN IS THE PROPRIETARY PROPERTY OF APPLE INC. THE POSESSOR AGREES TO THE FOLLOWING:
I TO MAINTAIN THIS DOCUMENT IN CONFIDENCE
II NOT TO REPRODUCE OR COPY IT
III NOT TO REVEAL OR PUBLISH IT IN WHOLE OR PART
IV ALL RIGHTS RESERVED

PDF Watermark Remover DEMO : Purchase from www.PDFWatermarkRemover.com to remove the watermark

SOC - GPIO INTERFACES

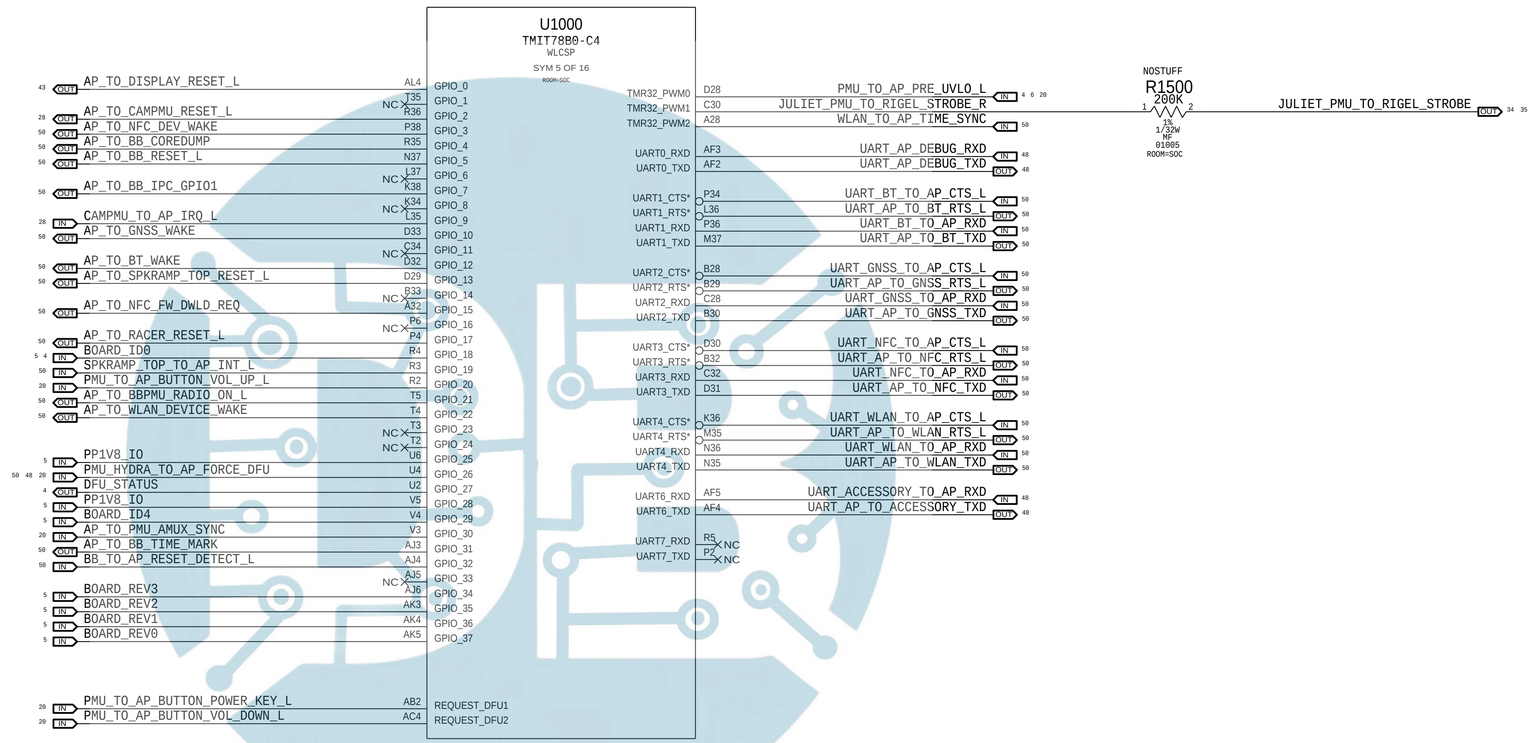

PAGE TITLE	SOC: GPIO & UART
Apple Inc.	DRAWING NUMBER 051-02221 SIZE D
	REVISION 9.0.0
	BRANCH evt-1
	PAGE 15 OF 80
	SHEET 11 OF 51

NOTICE OF PROPRIETARY PROPERTY:
THE INFORMATION CONTAINED HEREIN IS THE PROPRIETARY PROPERTY OF APPLE INC.
THE POSESSOR AGREES TO THE FOLLOWING:
I TO MAINTAIN THIS DOCUMENT IN CONFIDENCE
II NOT TO REPRODUCE OR COPY IT
III NOT TO REVEAL OR PUBLISH IT IN WHOLE OR PART
IV ALL RIGHTS RESERVED

PDF Watermark Remover DEMO : Purchase from www.PDFWatermarkRemover.com to remove the watermark

SOC - AOP

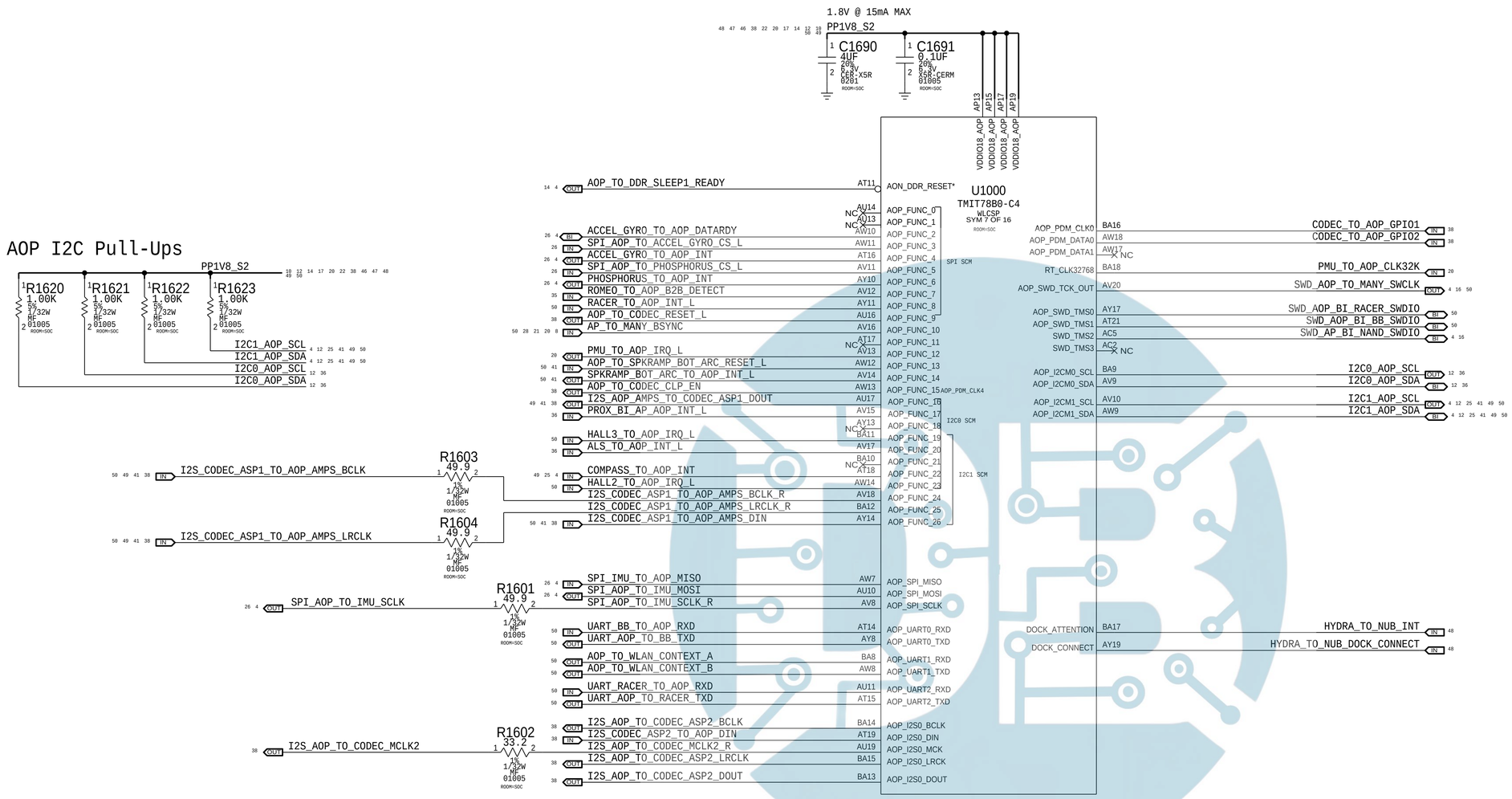

PAGE TITLE
SOC: AOP

Apple Inc.

DRAWING NUMBER 051-02221 SIZE D
REVISION 9.0.0
BRANCH evt-1
PAGE 16 OF 80
SHEET 12 OF 51

NOTICE OF PROPRIETARY PROPERTY:
THE INFORMATION CONTAINED HEREIN IS THE PROPRIETARY PROPERTY OF APPLE INC.
THE POSESSOR AGREES TO THE FOLLOWING:
I TO MAINTAIN THIS DOCUMENT IN CONFIDENCE
II NOT TO REPRODUCE OR COPY IT
III NOT TO REVEAL OR PUBLISH IT IN WHOLE OR PART
IV ALL RIGHTS RESERVED

PDF Watermark Remover DEMO : Purchase from www.PDFWatermarkRemover.com to remove the watermark

SOC - CPU, GPU & SOC RAILS

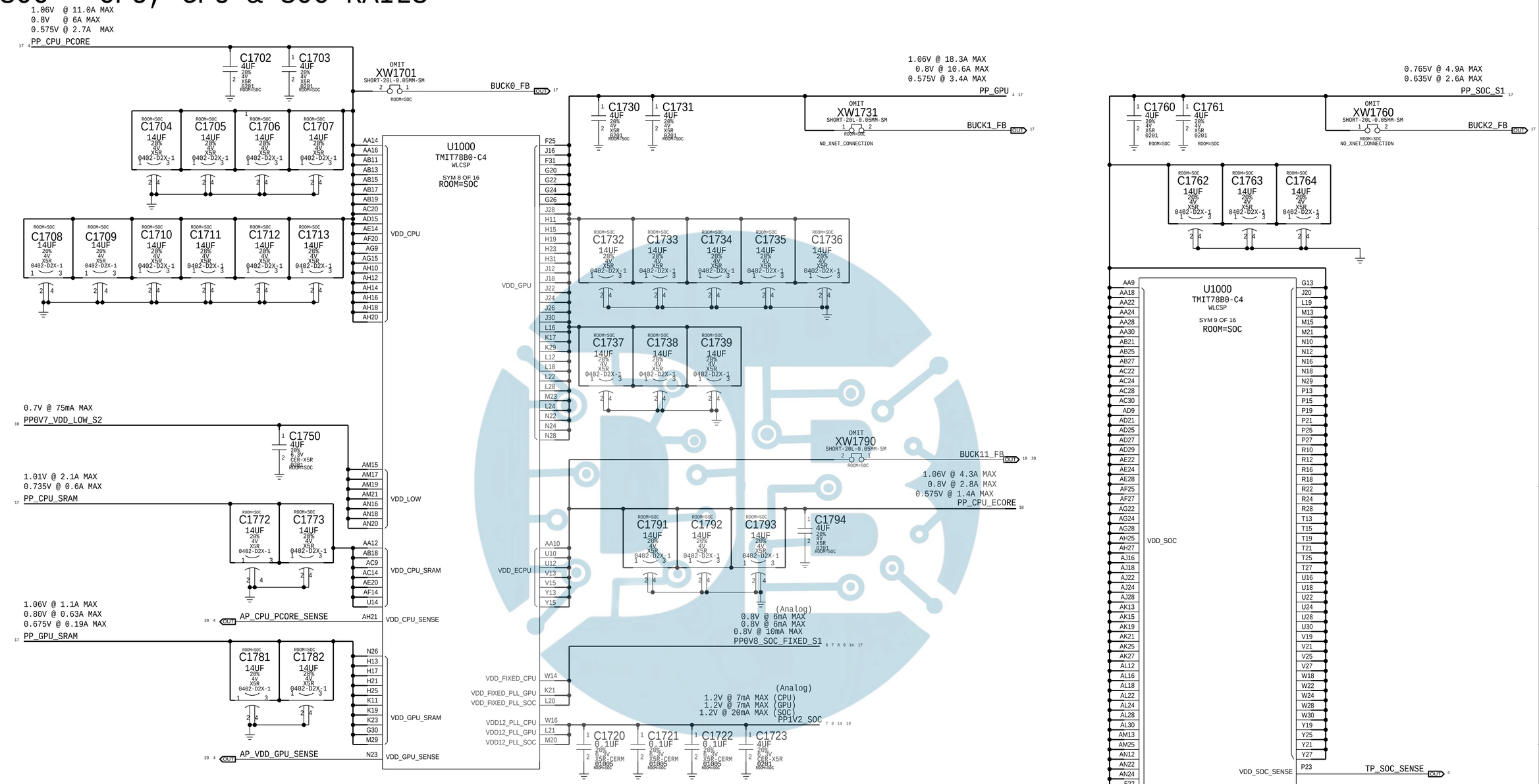

PAGE TITLE

SOC: Power (1/3)

Apple Inc.

DRAWING NUMBER 051-02221 SIZE D

REVISION 9.0.0

BRANCH evt-1

PAGE 17 OF 80

SHEET 13 OF 51

NOTICE OF PROPRIETARY PROPERTY:

THE INFORMATION CONTAINED HEREIN IS THE PROPRIETARY PROPERTY OF APPLE INC. THE POSESSOR AGREES TO THE FOLLOWING:

I TO MAINTAIN THIS DOCUMENT IN CONFIDENCE

II NOT TO REPRODUCE OR COPY IT

III NOT TO REVEAL OR PUBLISH IT IN WHOLE OR PART

IV ALL RIGHTS RESERVED

PDF Watermark Remover DEMO : Purchase from www.PDFWatermarkRemover.com to remove the watermark

SOC - POWER SUPPLIES

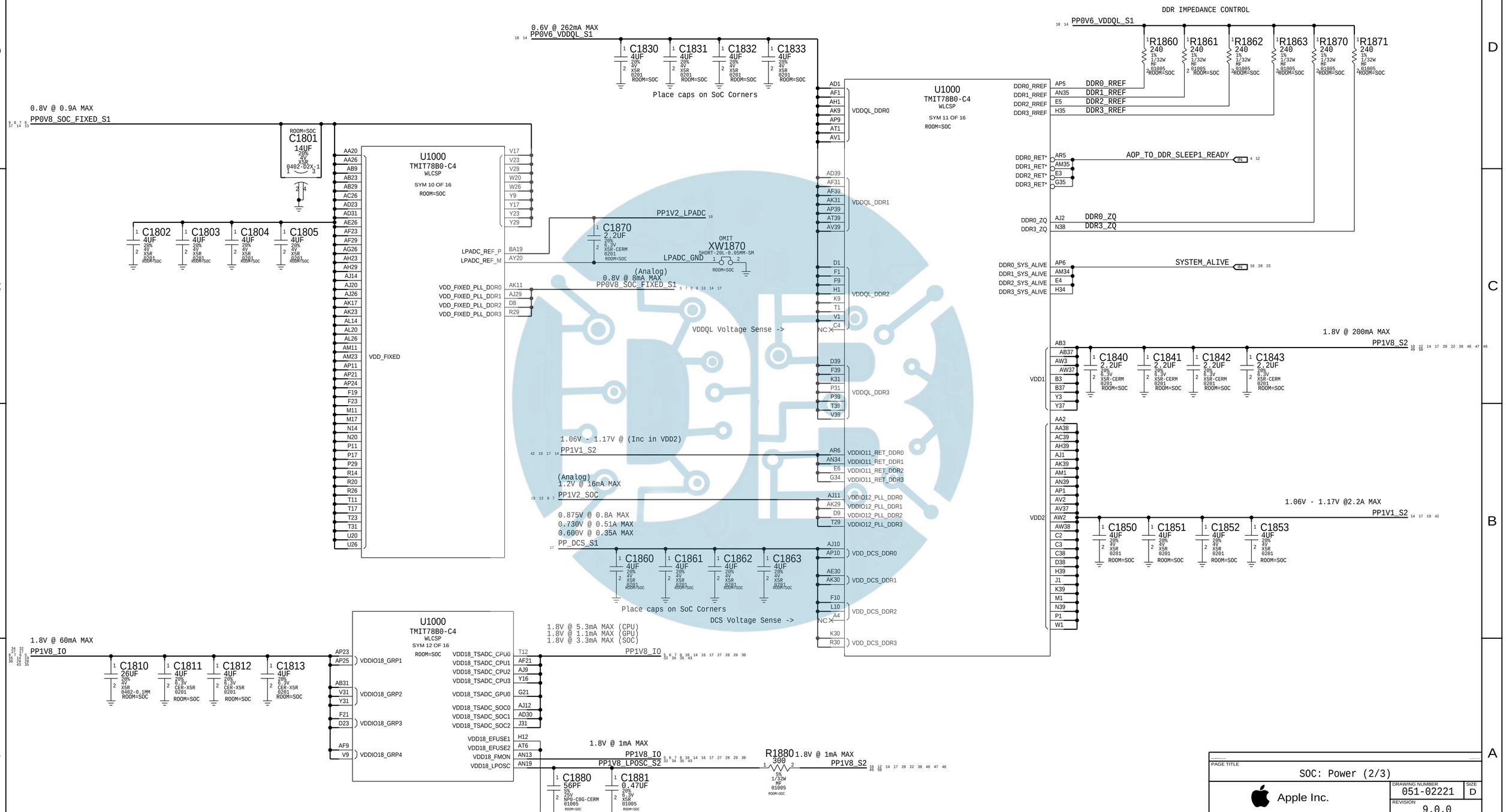

PAGE TITLE
SOC: Power (2/3)

Apple Inc.

DRAWING NUMBER 051-02221 SIZE D
REVISION 9.0.0
BRANCH evt-1
PAGE 18 OF 80
SHEET 14 OF 51

NOTICE OF PROPRIETARY PROPERTY:
THE INFORMATION CONTAINED HEREIN IS THE PROPRIETARY PROPERTY OF APPLE INC.
THE POSESSOR AGREES TO THE FOLLOWING:
I TO MAINTAIN THIS DOCUMENT IN CONFIDENCE
II NOT TO REPRODUCE OR COPY IT
III NOT TO REVEAL OR PUBLISH IT IN WHOLE OR PART
IV ALL RIGHTS RESERVED

PDF Watermark Remover DEMO : Purchase from www.PDFWatermarkRemover.com to remove the watermark

SOC - POWER SUPPLIES

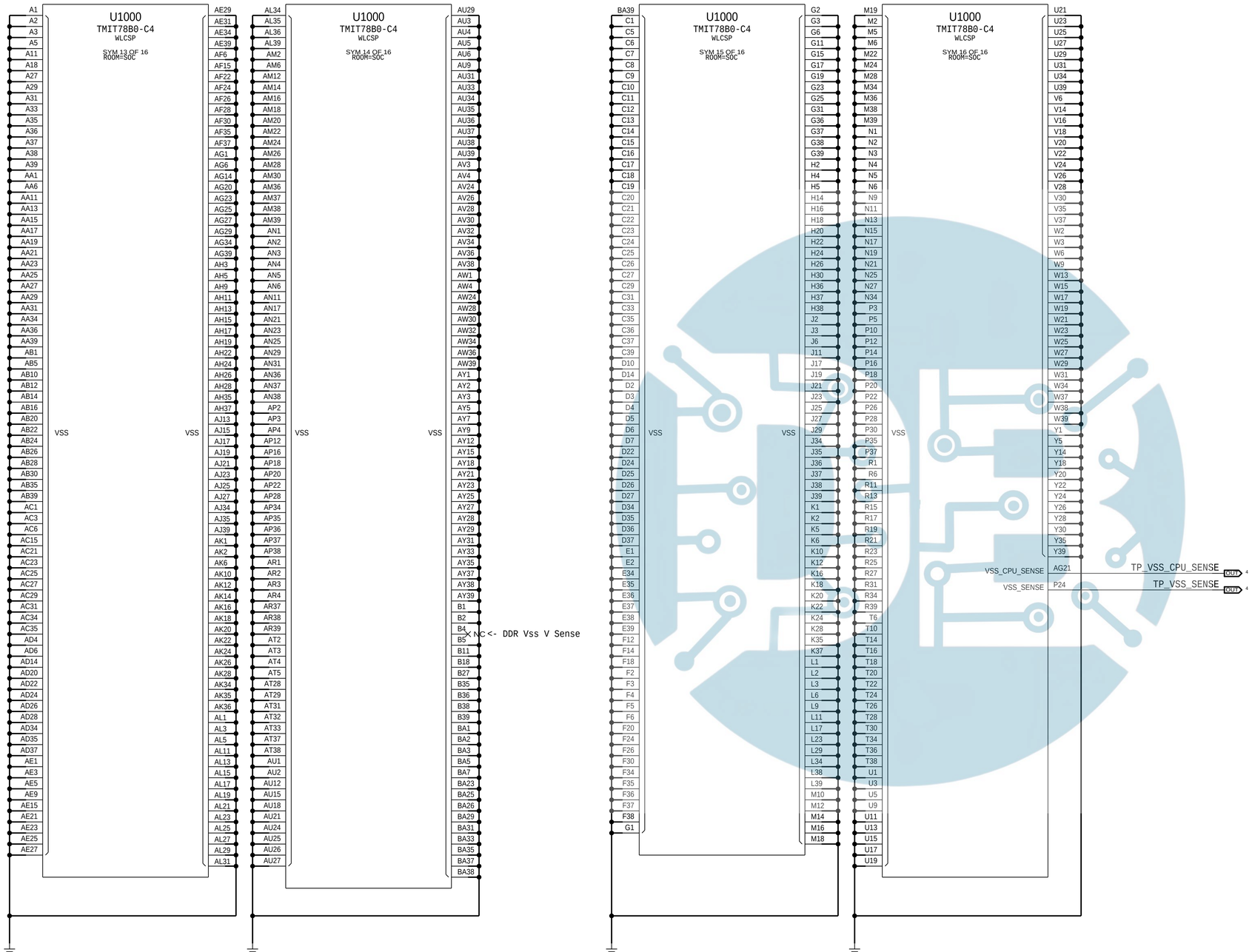

PAGE TITLE	SOC: Power (3/3)
Apple Inc.	DRAWING NUMBER 051-02221 SIZE D
	REVISION 9.0.0
	BRANCH evt-1
	PAGE 19 OF 80
	SHEET 15 OF 51

NOTICE OF PROPRIETARY PROPERTY:
THE INFORMATION CONTAINED HEREIN IS THE PROPRIETARY PROPERTY OF APPLE INC.
THE POSESSOR AGREES TO THE FOLLOWING:
I TO MAINTAIN THIS DOCUMENT IN CONFIDENCE
II NOT TO REPRODUCE OR COPY IT
III NOT TO REVEAL OR PUBLISH IT IN WHOLE OR PART
IV ALL RIGHTS RESERVED

PDF Watermark Remover DEMO : Purchase from www.PDFWatermarkRemover.com to remove the watermark

S4E NAND

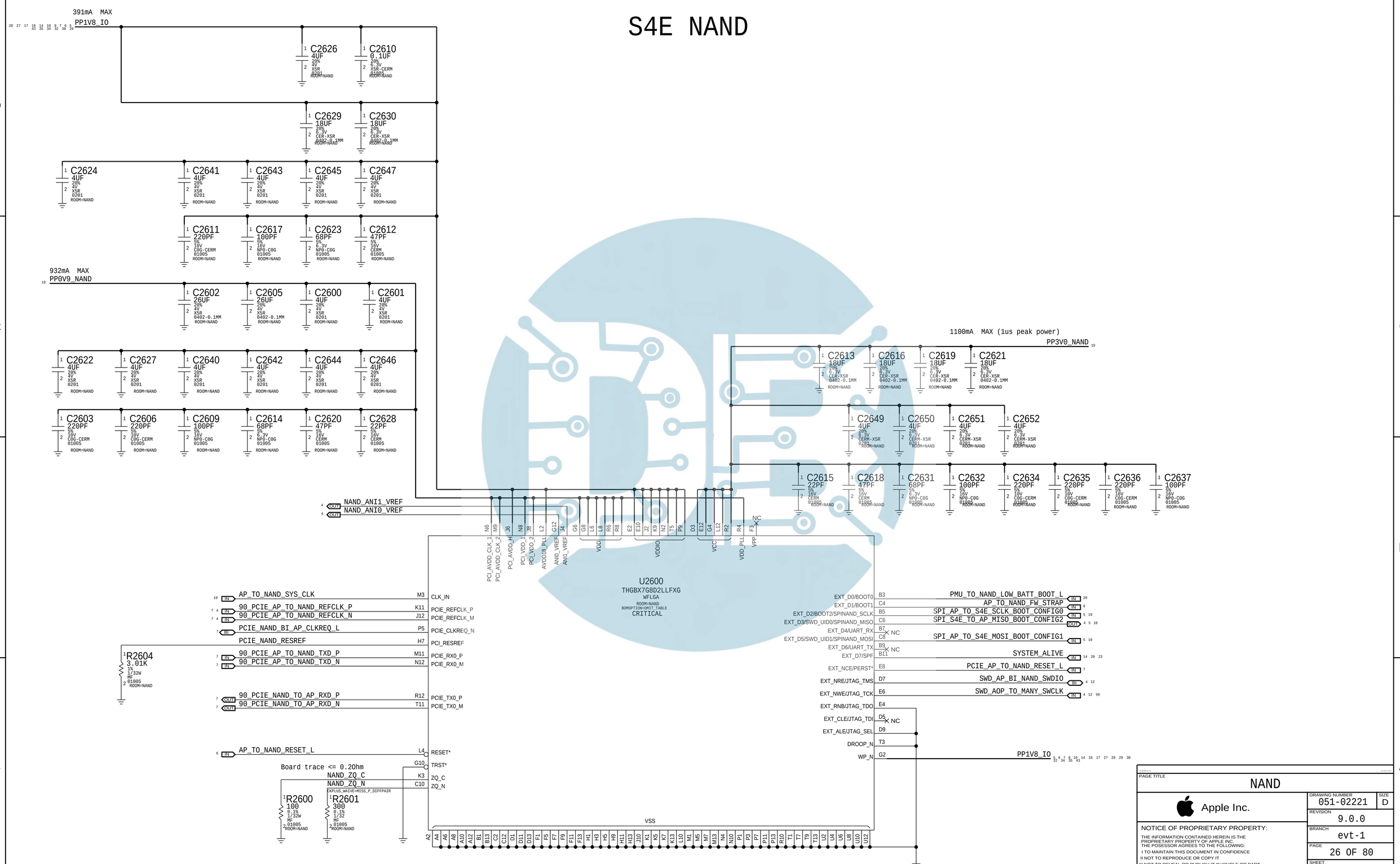

PAGE TITLE
NAND

Apple Inc.

DRAWING NUMBER	051-02221
SIZE	D
REVISION	9.0.0
BRANCH	evt-1
PAGE	26 OF 80
SHEET	16 OF 51

NOTICE OF PROPRIETARY PROPERTY:
THE INFORMATION CONTAINED HEREIN IS THE PROPRIETARY PROPERTY OF APPLE INC.
THE POSESSOR AGREES TO THE FOLLOWING:
I TO MAINTAIN THIS DOCUMENT IN CONFIDENCE
II NOT TO REPRODUCE OR COPY IT
III NOT TO REVEAL OR PUBLISH IT IN WHOLE OR PART
IV ALL RIGHTS RESERVED

PDF Watermark Remover DEMO : Purchase from www.PDFWatermarkRemover.com to remove the watermark

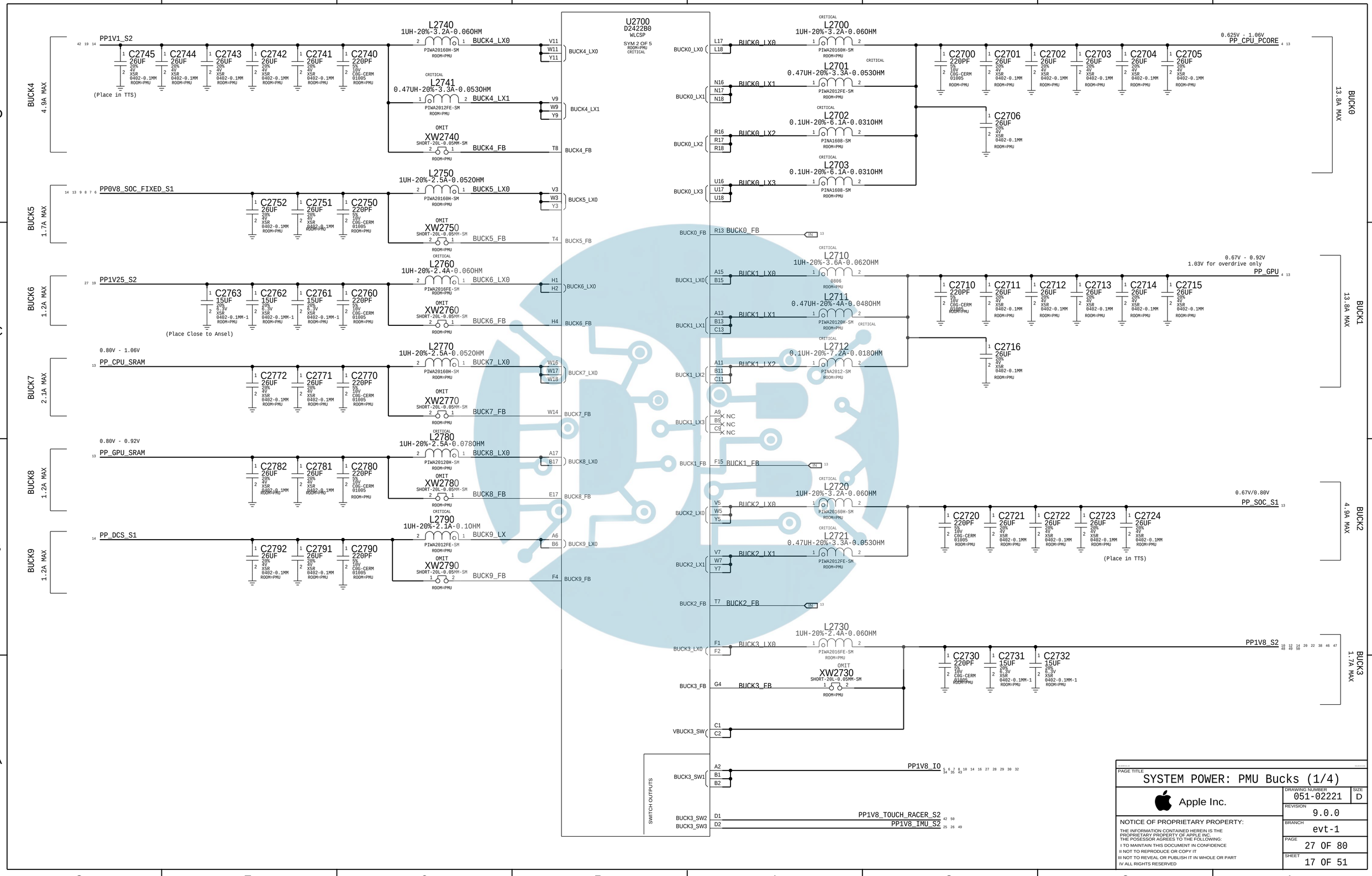

PDF Watermark Remover DEMO : Purchase from www.PDFWatermarkRemover.com to remove the watermark

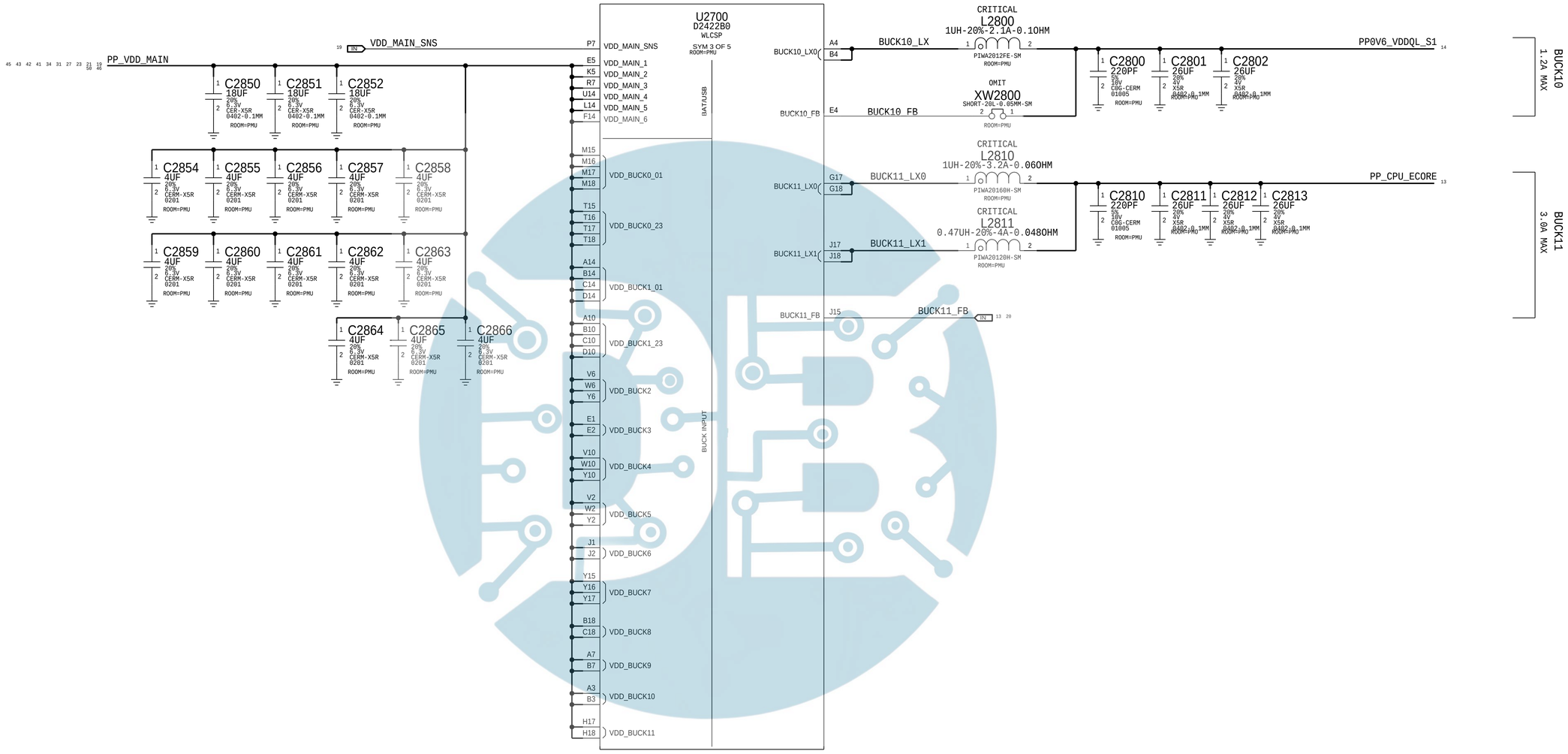

PAGE TITLE
SYSTEM POWER: PMU Bucks (2/4)

Apple Inc.

DRAWING NUMBER	051-02221
SIZE	D
REVISION	9.0.0
BRANCH	evt-1
PAGE	28 OF 80
SHEET	18 OF 51

NOTICE OF PROPRIETARY PROPERTY:
THE INFORMATION CONTAINED HEREIN IS THE PROPRIETARY PROPERTY OF APPLE INC.
THE POSESSOR AGREES TO THE FOLLOWING:
I TO MAINTAIN THIS DOCUMENT IN CONFIDENCE
II NOT TO REPRODUCE OR COPY IT
III NOT TO REVEAL OR PUBLISH IT IN WHOLE OR PART
IV ALL RIGHTS RESERVED

PDF Watermark Remover DEMO : Purchase from www.PDFWatermarkRemover.com to remove the watermark

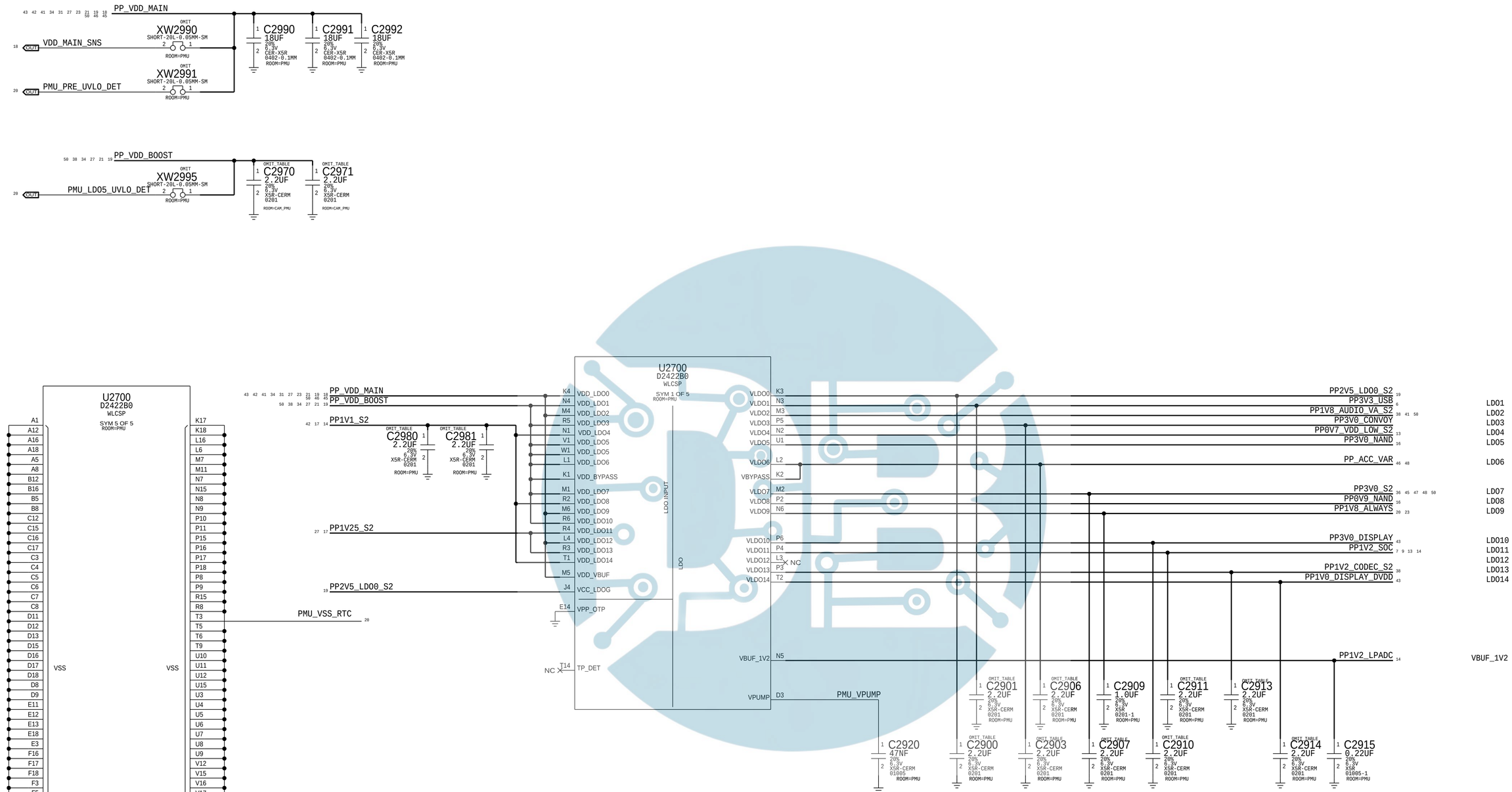

VPUMP: 10nF min. @4.6V

PAGE TITLE
SYSTEM POWER: PMU LDOs (3/4)

Apple Inc.

DRAWING NUMBER	051-02221
SIZE	D
REVISION	9.0.0
BRANCH	evt-1
PAGE	29 OF 80
SHEET	19 OF 51

NOTICE OF PROPRIETARY PROPERTY:
THE INFORMATION CONTAINED HEREIN IS THE PROPRIETARY PROPERTY OF APPLE INC.
THE POSESSOR AGREES TO THE FOLLOWING:
I TO MAINTAIN THIS DOCUMENT IN CONFIDENCE
II NOT TO REPRODUCE OR COPY IT
III NOT TO REVEAL OR PUBLISH IT IN WHOLE OR PART
IV ALL RIGHTS RESERVED

PDF Watermark Remover DEMO : Purchase from www.PDFWatermarkRemover.com to remove the watermark

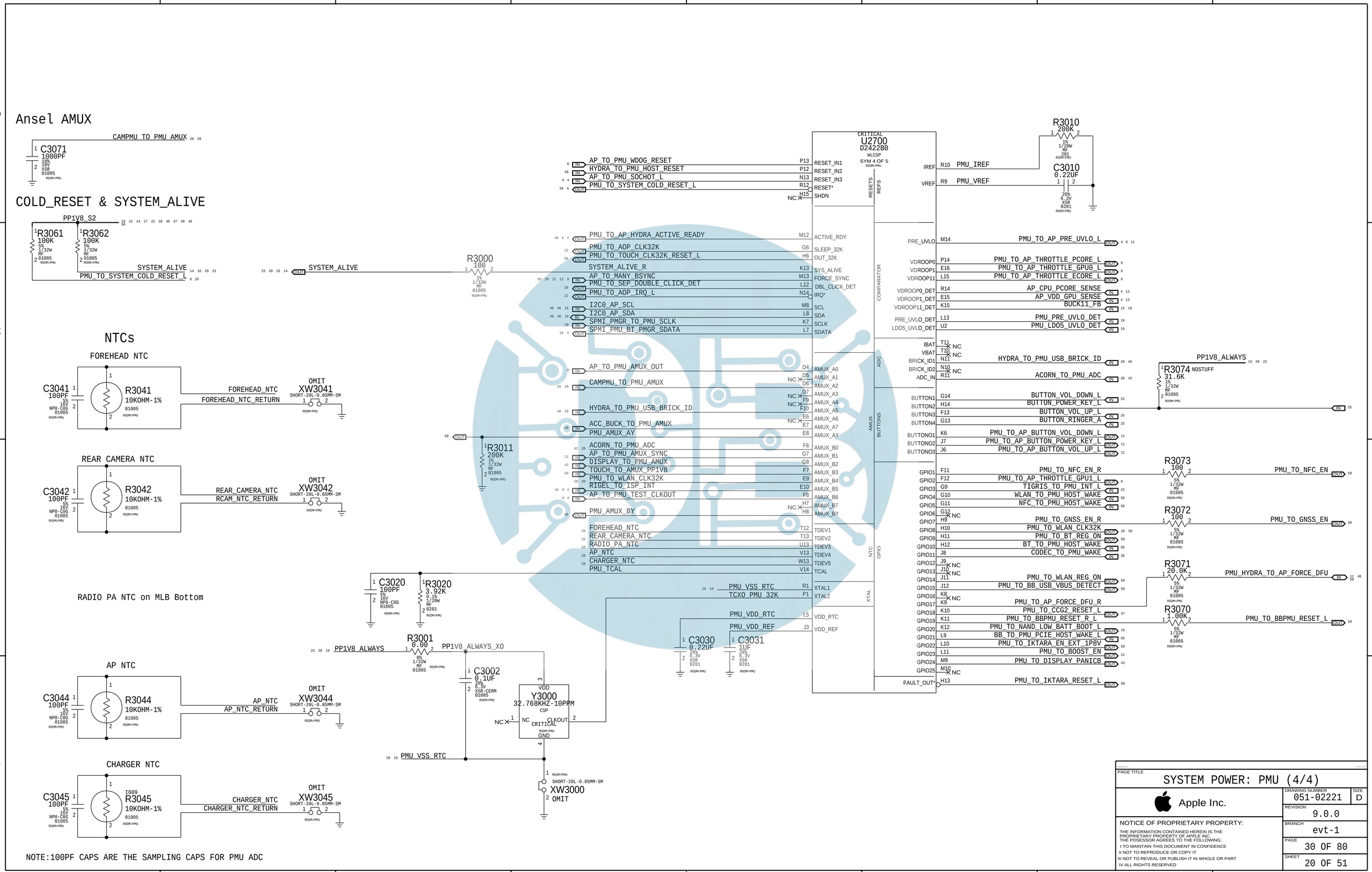

PDF Watermark Remover DEMO : Purchase from www.PDFWatermarkRemover.com to remove the watermark

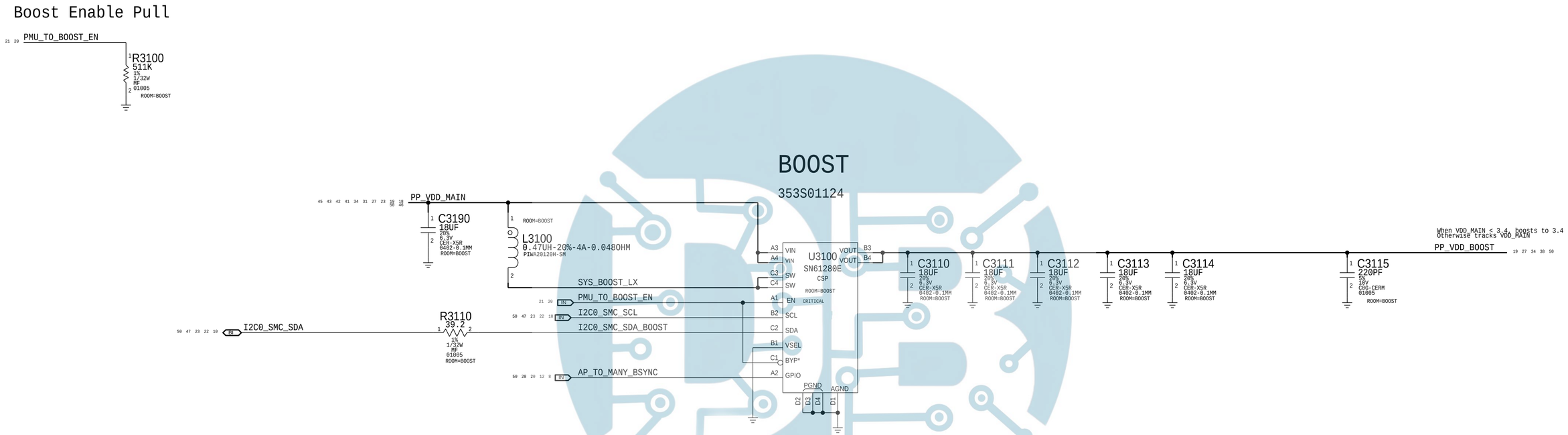

PAGE TITLE

SYSTEM POWER: Boost

Apple Inc.

DRAWING NUMBER 051-02221

SIZE D

REVISION 9.0.0

BRANCH evt-1

PAGE 31 OF 80

SHEET 21 OF 51

NOTICE OF PROPRIETARY PROPERTY:

THE INFORMATION CONTAINED HEREIN IS THE PROPRIETARY PROPERTY OF APPLE INC.
THE POSESSOR AGREES TO THE FOLLOWING:

I TO MAINTAIN THIS DOCUMENT IN CONFIDENCE

II NOT TO REPRODUCE OR COPY IT

III NOT TO REVEAL OR PUBLISH IT IN WHOLE OR PART

IV ALL RIGHTS RESERVED

PDF Watermark Remover DEMO : Purchase from www.PDFWatermarkRemover.com to remove the watermark

BATTERY CONNECTOR

Rcpt: 516S00232 <-- This one on MLB
Plug: 516S00233

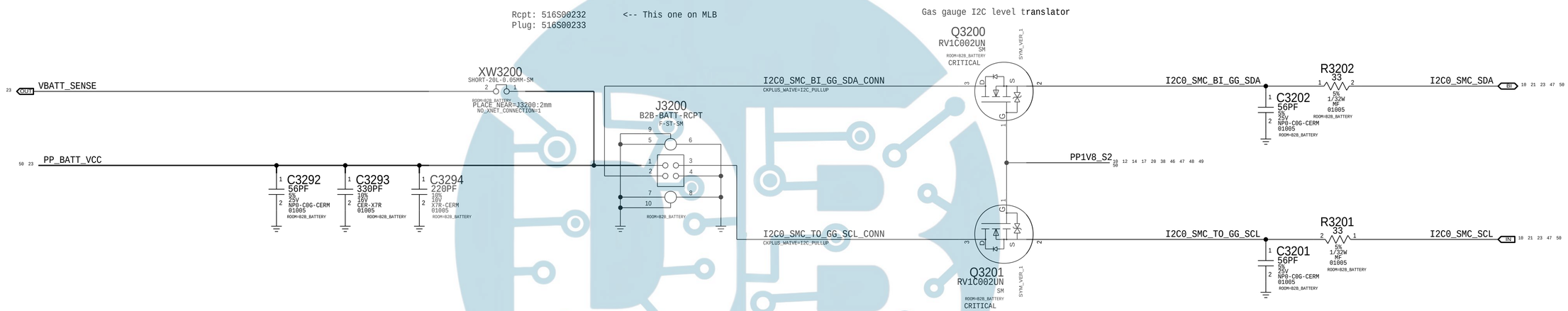

PAGE TITLE
SYSTEM POWER: B2B Battery

Apple Inc.

DRAWING NUMBER 051-02221
SIZE D
REVISION 9.0.0
BRANCH evt-1
PAGE 32 OF 80
SHEET 22 OF 51

NOTICE OF PROPRIETARY PROPERTY:
THE INFORMATION CONTAINED HEREIN IS THE PROPRIETARY PROPERTY OF APPLE INC.
THE POSESSOR AGREES TO THE FOLLOWING:
I TO MAINTAIN THIS DOCUMENT IN CONFIDENCE
II NOT TO REPRODUCE OR COPY IT
III NOT TO REVEAL OR PUBLISH IT IN WHOLE OR PART
IV ALL RIGHTS RESERVED

PDF Watermark Remover DEMO : Purchase from www.PDFWatermarkRemover.com to remove the watermark

TIGRIS2 CHARGER

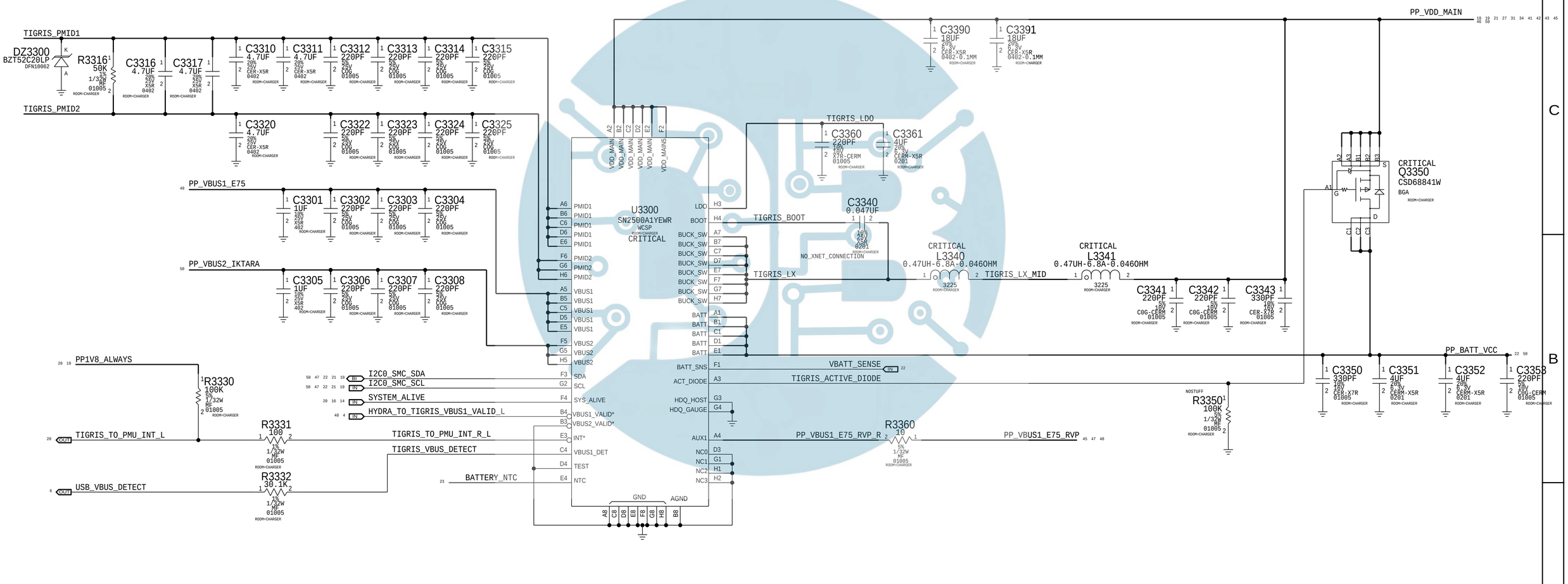

PAGE TITLE

SYSTEM POWER: Charger

Apple Inc.

DRAWING NUMBER 051-02221 SIZE D

REVISION 9.0.0

BRANCH evt-1

PAGE 33 OF 80

SHEET 23 OF 51

NOTICE OF PROPRIETARY PROPERTY:

THE INFORMATION CONTAINED HEREIN IS THE PROPRIETARY PROPERTY OF APPLE INC. THE POSESSOR AGREES TO THE FOLLOWING:

I TO MAINTAIN THIS DOCUMENT IN CONFIDENCE

II NOT TO REPRODUCE OR COPY IT

III NOT TO REVEAL OR PUBLISH IT IN WHOLE OR PART

IV ALL RIGHTS RESERVED

PDF Watermark Remover DEMO : Purchase from www.PDFWatermarkRemover.com to remove the watermark

Iktara Components on MLB Bottom

PAGE TITLE
SYSTEM POWER: Iktara

Apple Inc.

DRAWING NUMBER 051-02221
SIZE D
REVISION 9.0.0
BRANCH evt-1
PAGE 34 OF 80
SHEET 24 OF 51

NOTICE OF PROPRIETARY PROPERTY:
THE INFORMATION CONTAINED HEREIN IS THE PROPRIETARY PROPERTY OF APPLE INC.
THE POSESSOR AGREES TO THE FOLLOWING:
I TO MAINTAIN THIS DOCUMENT IN CONFIDENCE
II NOT TO REPRODUCE OR COPY IT
III NOT TO REVEAL OR PUBLISH IT IN WHOLE OR PART
IV ALL RIGHTS RESERVED

PDF Watermark Remover DEMO : Purchase from www.PDFWatermarkRemover.com to remove the watermark

Cyclone Filtering

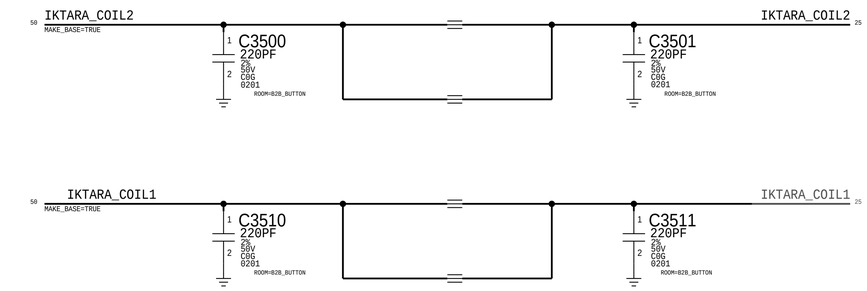

BUTTONS

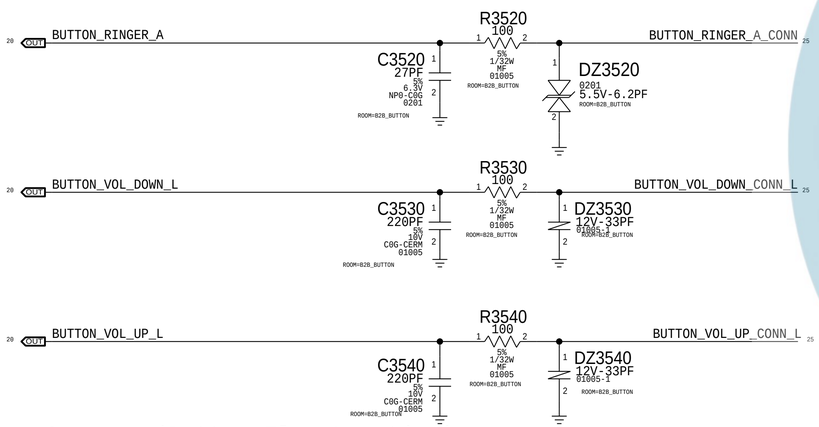

Compass (Button Flex Location)

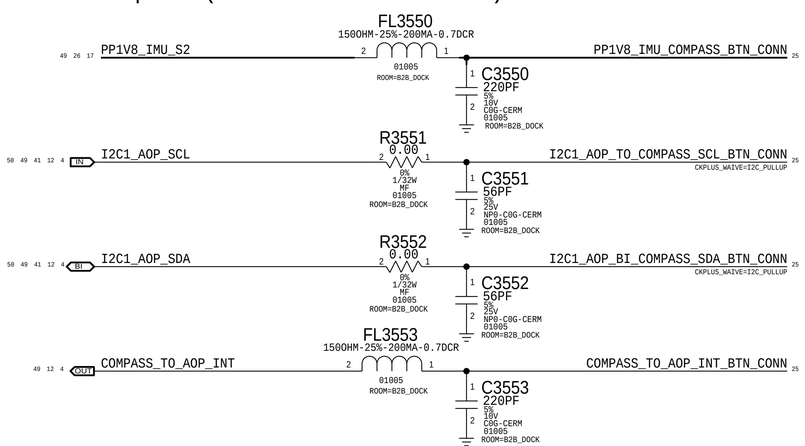

Cyclone + Button Connnector

Rcpt: 516S00289 <-- This one on MLB
Plug: 516S00290

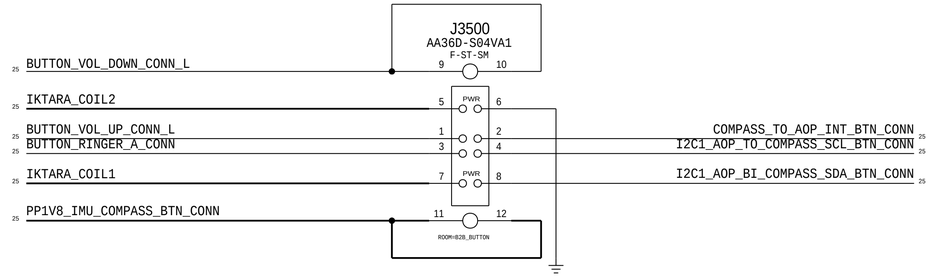

PAGE TITLE
SYSTEM POWER: B2B Cyclone + Button

Apple Inc.

DRAWING NUMBER 051-02221
SIZE D
REVISION 9.0.0
BRANCH evt-1
PAGE 35 OF 80
SHEET 25 OF 51

NOTICE OF PROPRIETARY PROPERTY:
THE INFORMATION CONTAINED HEREIN IS THE PROPRIETARY PROPERTY OF APPLE INC.
THE POSESSOR AGREES TO THE FOLLOWING:
I TO MAINTAIN THIS DOCUMENT IN CONFIDENCE
II NOT TO REPRODUCE OR COPY IT
III NOT TO REVEAL OR PUBLISH IT IN WHOLE OR PART
IV ALL RIGHTS RESERVED

PDF Watermark Remover DEMO : Purchase from www.PDFWatermarkRemover.com to remove the watermark

Graphite - Accel & Gyro

APN: 338S00304

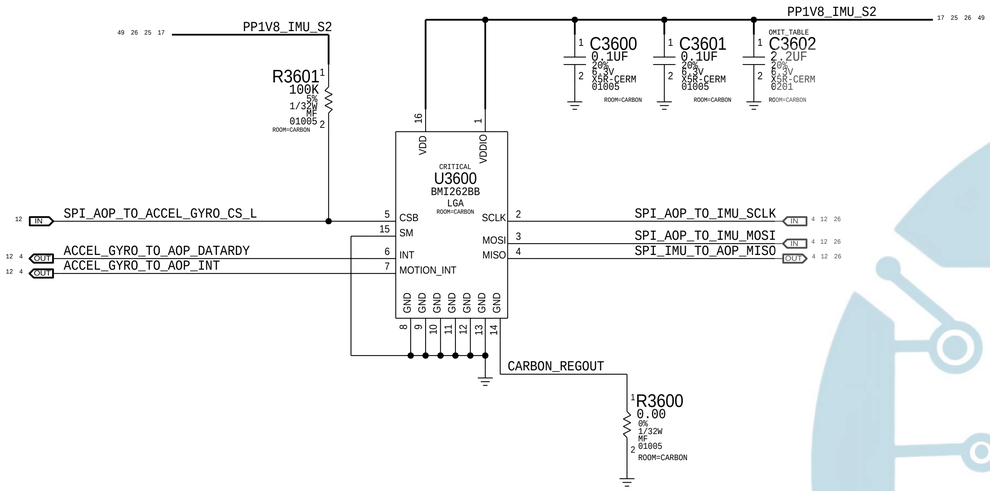

Magnesium - Compass

(On Dock or Button Flex)

Phosphorus

BOSCH (APN:338S00188)
ST (APN:338S00230)

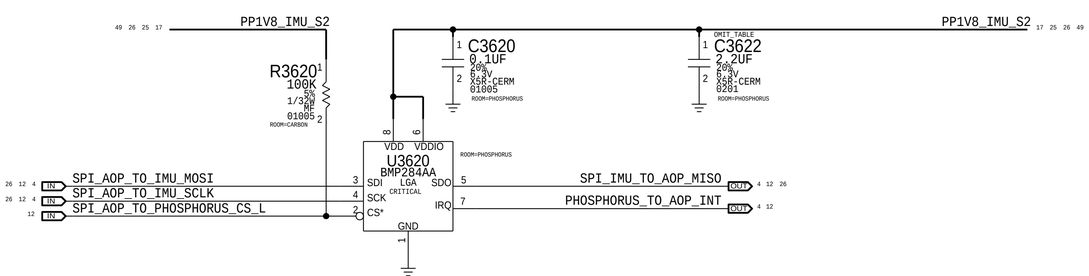

PAGE TITLE

SENSORS

Apple Inc.

DRAWING NUMBER	051-02221
SIZE	D
REVISION	9.0.0
BRANCH	evt-1
PAGE	36 OF 80
SHEET	26 OF 51

NOTICE OF PROPRIETARY PROPERTY:
THE INFORMATION CONTAINED HEREIN IS THE PROPRIETARY PROPERTY OF APPLE INC.
THE POSESSOR AGREES TO THE FOLLOWING:
I TO MAINTAIN THIS DOCUMENT IN CONFIDENCE
II NOT TO REPRODUCE OR COPY IT
III NOT TO REVEAL OR PUBLISH IT IN WHOLE OR PART
IV ALL RIGHTS RESERVED

PDF Watermark Remover DEMO : Purchase from www.PDFWatermarkRemover.com to remove the watermark

Camera PMU

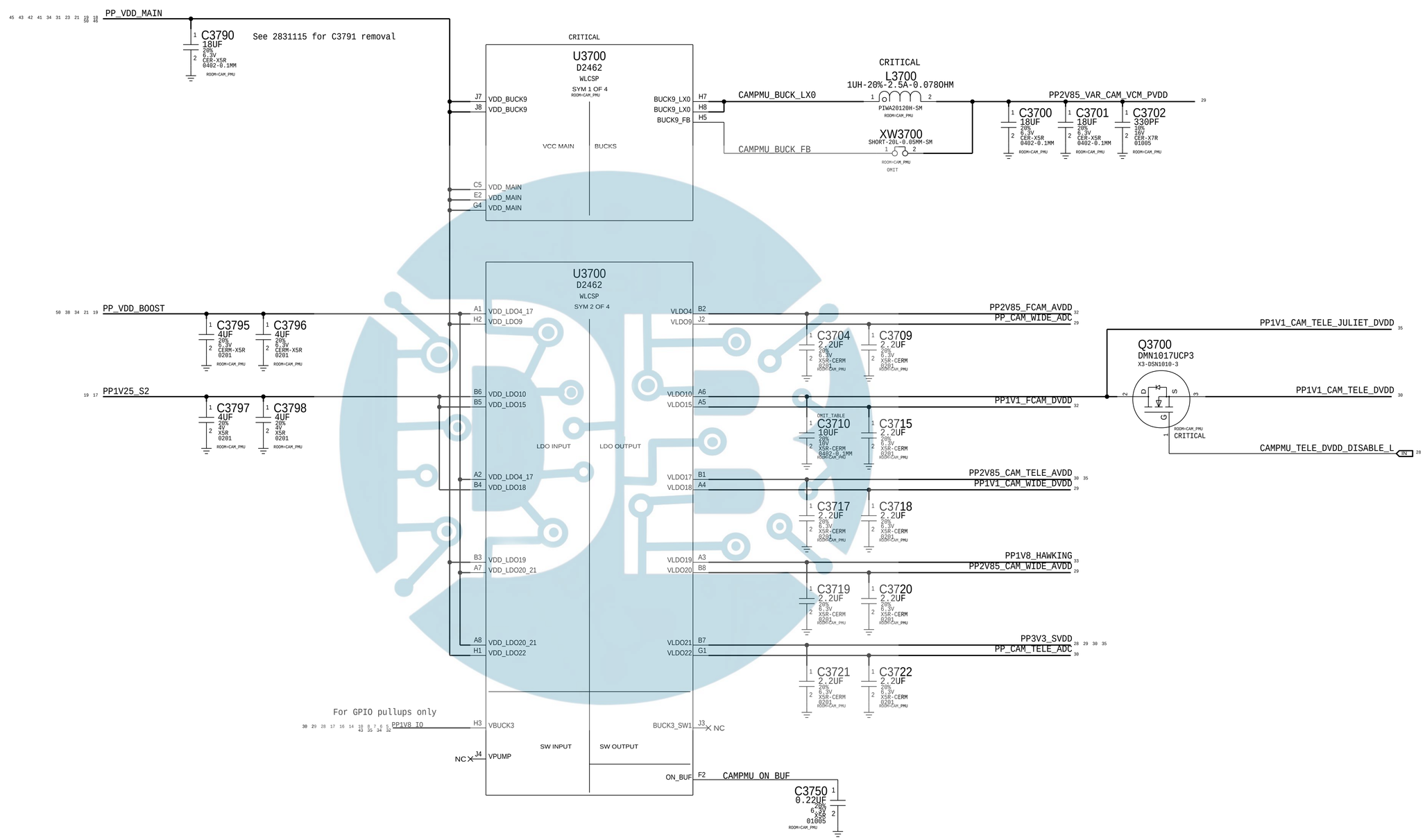

PAGE TITLE	CAMERA: PMU (1/2)
Apple Inc.	DRAWING NUMBER 051-02221 SIZE D
	REVISION 9.0.0
	BRANCH evt-1
	PAGE 37 OF 80
	SHEET 27 OF 51

NOTICE OF PROPRIETARY PROPERTY:
THE INFORMATION CONTAINED HEREIN IS THE PROPRIETARY PROPERTY OF APPLE INC.
THE POSESSOR AGREES TO THE FOLLOWING:
I TO MAINTAIN THIS DOCUMENT IN CONFIDENCE
II NOT TO REPRODUCE OR COPY IT
III NOT TO REVEAL OR PUBLISH IT IN WHOLE OR PART
IV ALL RIGHTS RESERVED

PDF Watermark Remover DEMO : Purchase from www.PDFWatermarkRemover.com to remove the watermark

Pull Downs

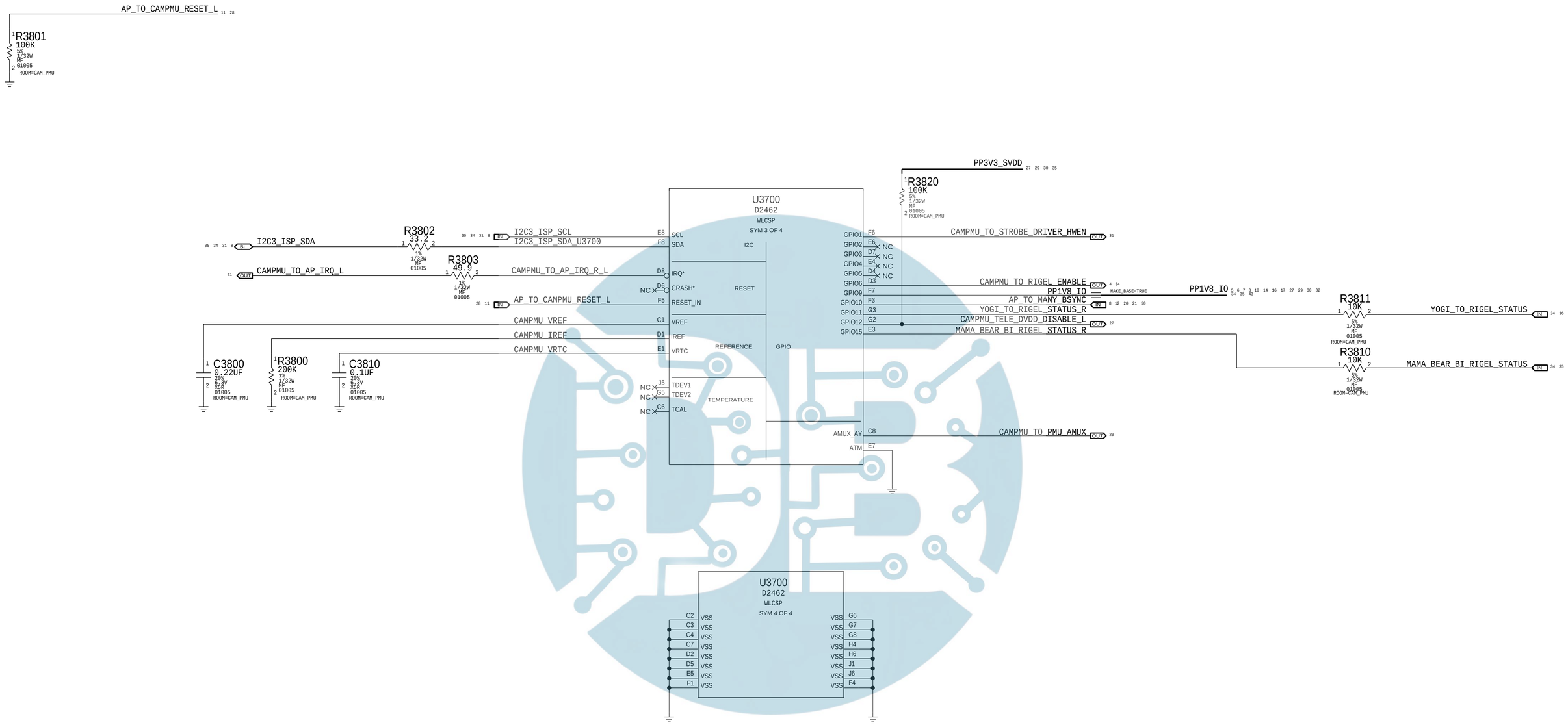

PAGE TITLE	CAMERA: PMU (2/2)
Apple Inc.	DRAWING NUMBER 051-02221 SIZE D
	REVISION 9.0.0
	BRANCH evt-1
	PAGE 38 OF 80
	SHEET 28 OF 51

NOTICE OF PROPRIETARY PROPERTY:
THE INFORMATION CONTAINED HEREIN IS THE PROPRIETARY PROPERTY OF APPLE INC.
THE POSESSOR AGREES TO THE FOLLOWING:
I TO MAINTAIN THIS DOCUMENT IN CONFIDENCE
II NOT TO REPRODUCE OR COPY IT
III NOT TO REVEAL OR PUBLISH IT IN WHOLE OR PART
IV ALL RIGHTS RESERVED

PDF Watermark Remover DEMO : Purchase from www.PDFWatermarkRemover.com to remove the watermark

Wide Camera Connector

Rcpt: 516S00313 <-- This one on MLB
Plug: 516S00314

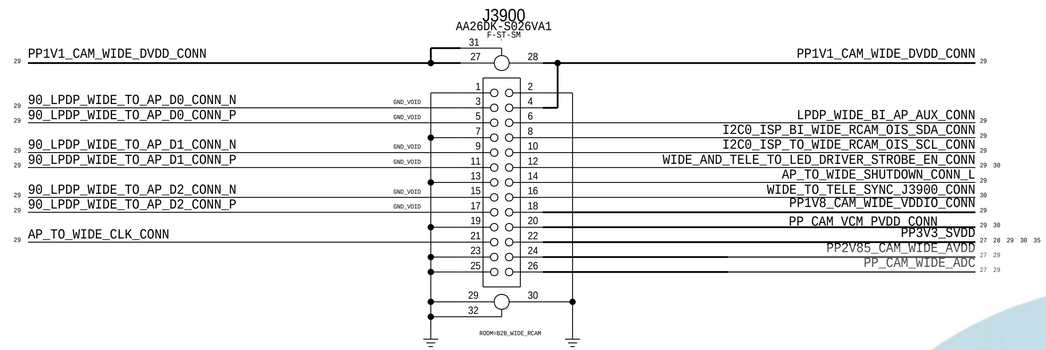

Power Filtering

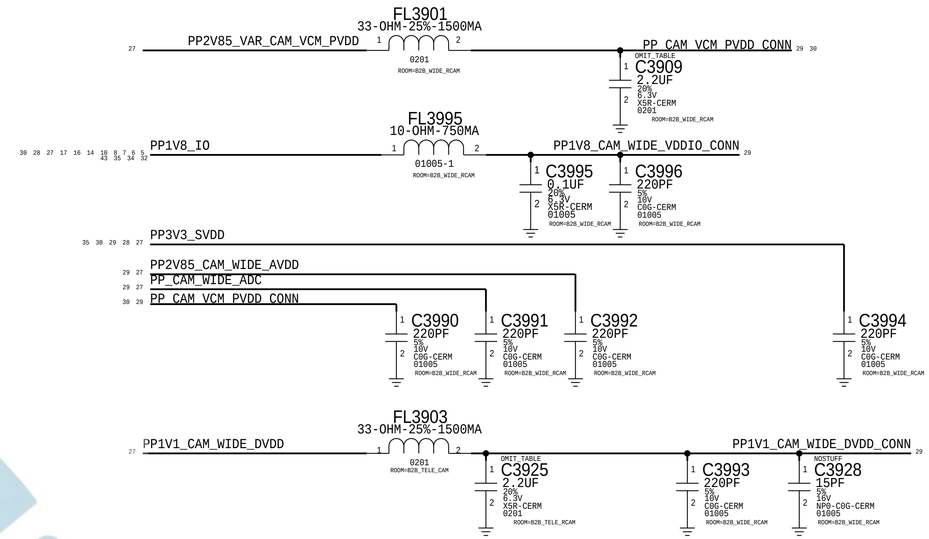

ISP I2C

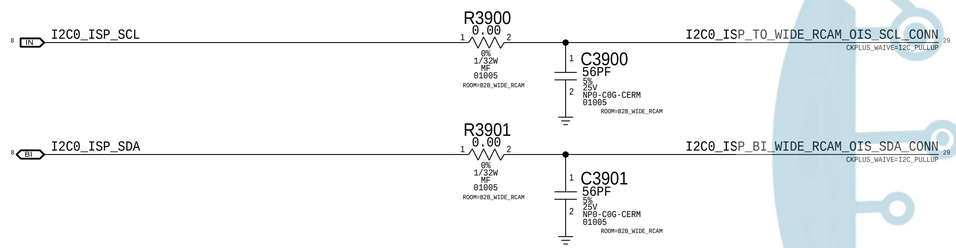

LPDP Filters

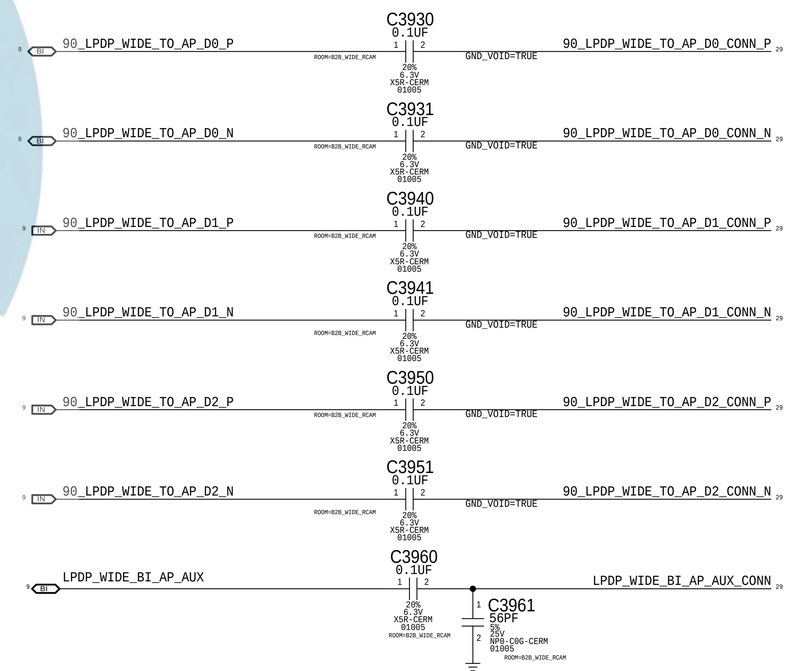

IO Filters

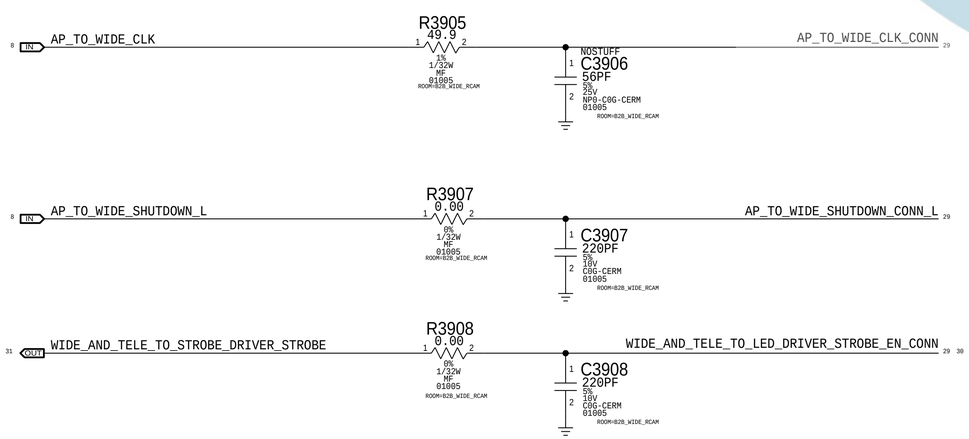

PAGE TITLE	CAMERA: B2B Wide (WY)
Apple Inc.	DRAWING NUMBER 051-02221 SIZE D
	REVISION 9.0.0
	BRANCH evt-1
	PAGE 39 OF 80
	SHEET 29 OF 51

NOTICE OF PROPRIETARY PROPERTY:
THE INFORMATION CONTAINED HEREIN IS THE PROPRIETARY PROPERTY OF APPLE INC.
THE POSESSOR AGREES TO THE FOLLOWING:
I TO MAINTAIN THIS DOCUMENT IN CONFIDENCE
II NOT TO REPRODUCE OR COPY IT
III NOT TO REVEAL OR PUBLISH IT IN WHOLE OR PART
IV ALL RIGHTS RESERVED

PDF Watermark Remover DEMO : Purchase from www.PDFWatermarkRemover.com to remove the watermark

Tele Camera Connector

Rcpt: 516S00313 <-- This one on MLB
Plug: 516S00314

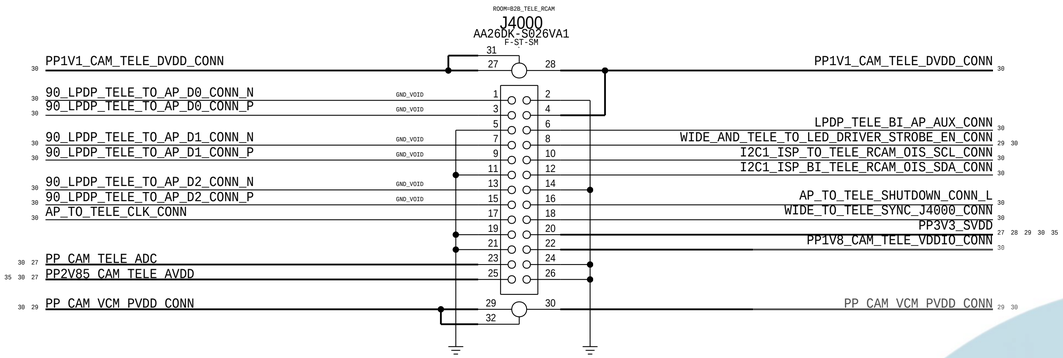

Power Filtering

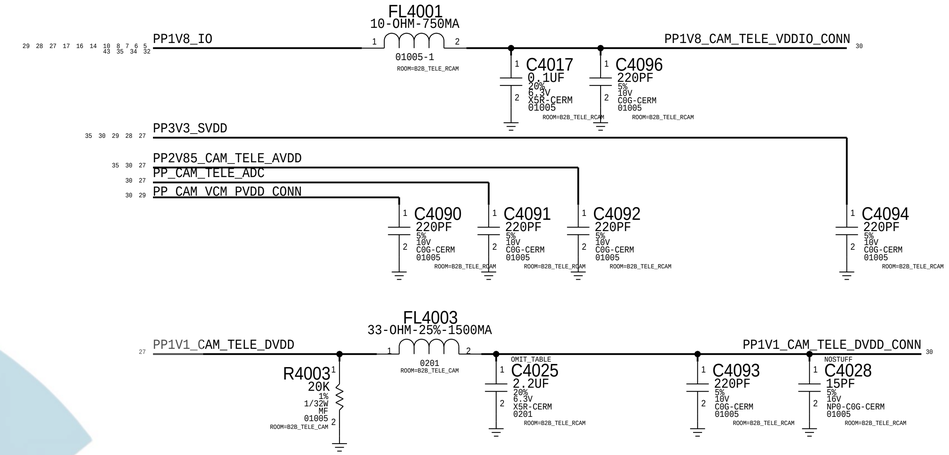

ISP I2C

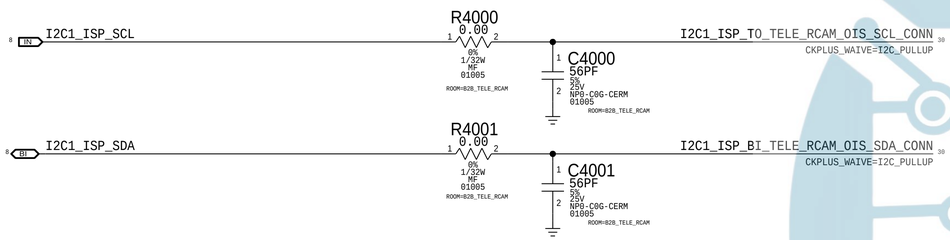

LPDP

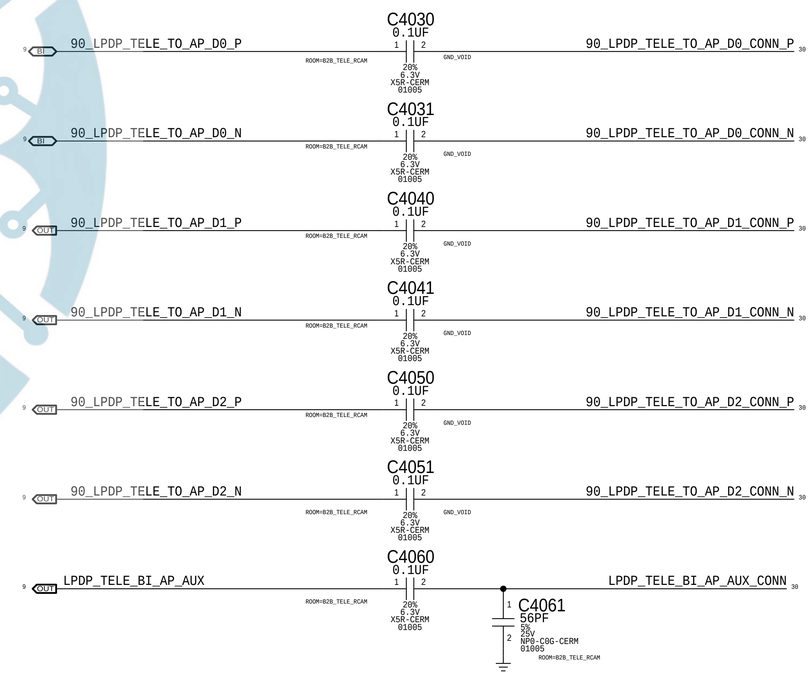

IO Filters

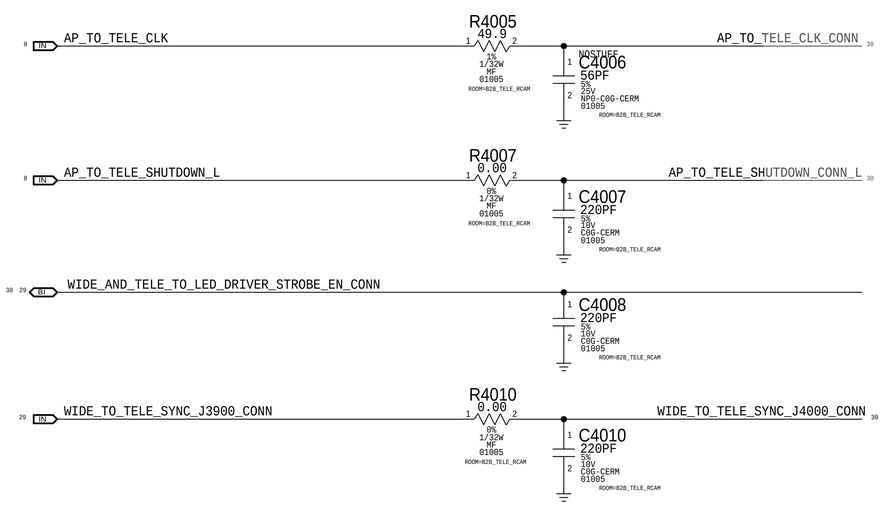

PAGE TITLE	CAMERA: B2B Tele (MT)
Apple Inc.	DRAWING NUMBER 051-02221 · SIZE D
	REVISION 9.0.0
	BRANCH evt-1
	PAGE 40 OF 80
	SHEET 30 OF 51

NOTICE OF PROPRIETARY PROPERTY:
THE INFORMATION CONTAINED HEREIN IS THE PROPRIETARY PROPERTY OF APPLE INC.
THE POSESSOR AGREES TO THE FOLLOWING:
I TO MAINTAIN THIS DOCUMENT IN CONFIDENCE
II NOT TO REPRODUCE OR COPY IT
III NOT TO REVEAL OR PUBLISH IT IN WHOLE OR PART
IV ALL RIGHTS RESERVED

PDF Watermark Remover DEMO : Purchase from www.PDFWatermarkRemover.com to remove the watermark

LED STROBE DRIVERS (NEON)

APN:353S00558
I2C Address (7-bit): 0x63

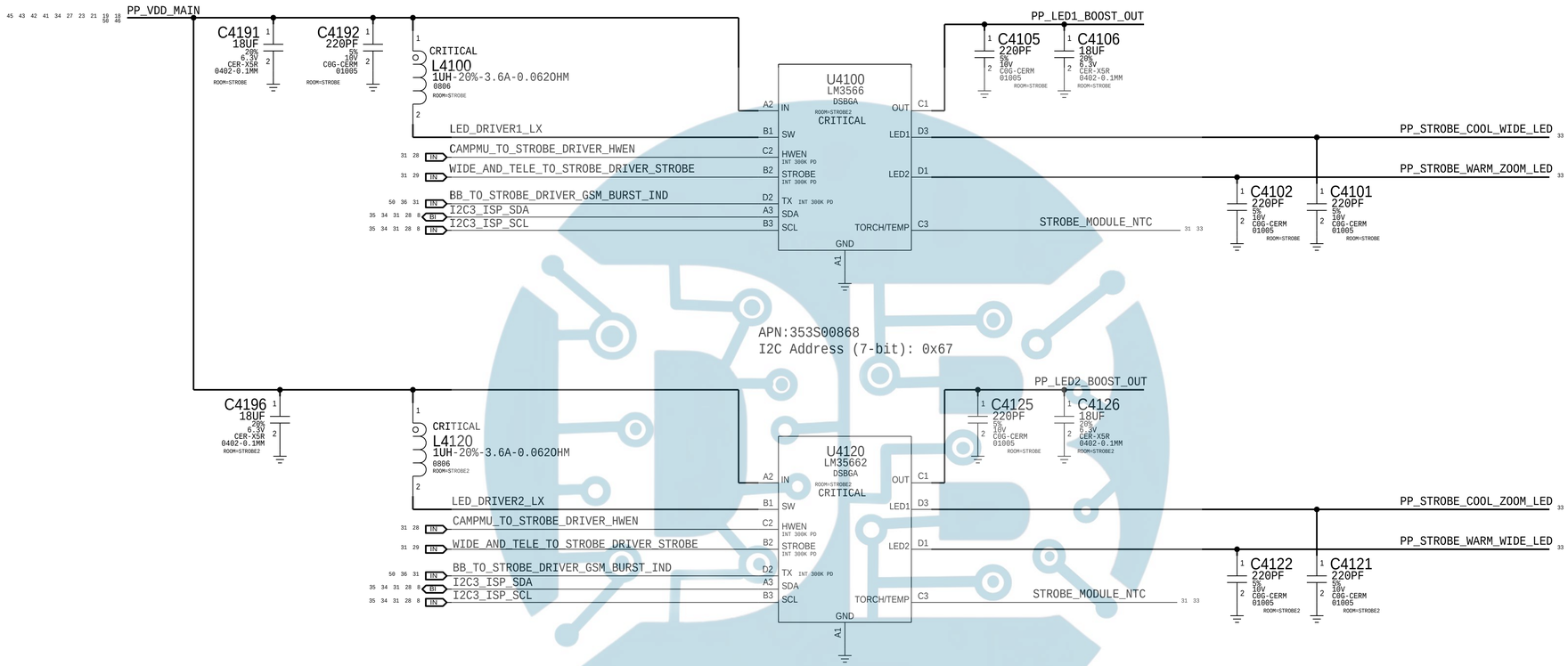

PAGE TITLE
CAMERA: Strobe Drivers

Apple Inc.

DRAWING NUMBER 051-02221
SIZE D
REVISION 9.0.0
BRANCH evt-1
PAGE 41 OF 80
SHEET 31 OF 51

NOTICE OF PROPRIETARY PROPERTY:
THE INFORMATION CONTAINED HEREIN IS THE PROPRIETARY PROPERTY OF APPLE INC.
THE POSESSOR AGREES TO THE FOLLOWING:
I TO MAINTAIN THIS DOCUMENT IN CONFIDENCE
II NOT TO REPRODUCE OR COPY IT
III NOT TO REVEAL OR PUBLISH IT IN WHOLE OR PART
IV ALL RIGHTS RESERVED

PDF Watermark Remover DEMO : Purchase from www.PDFWatermarkRemover.com to remove the watermark

NEW HAMPSHIRE POWER

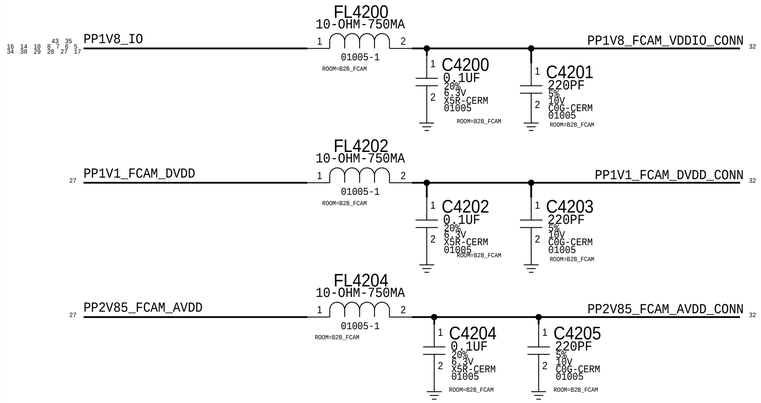

FCAM I/O

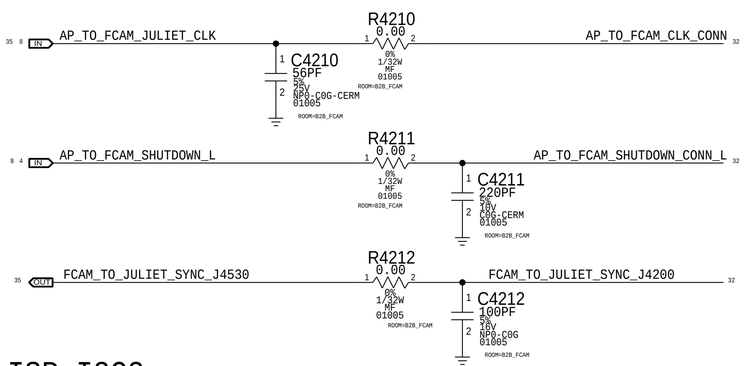

ISP I2C2

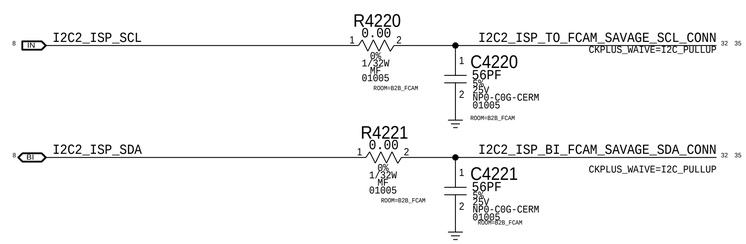

FCAM Connector

Rcpt: 516S00244 <-- This one on MLB
Plug: 516S00245

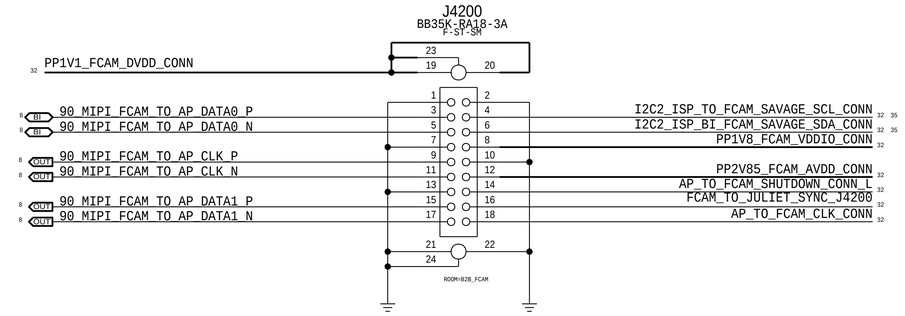

PAGE TITLE	CAMERA: B2B FCAM
Apple Inc.	DRAWING NUMBER 051-02221 SIZE D
	REVISION 9.0.0
	BRANCH evt-1
	PAGE 42 OF 80
	SHEET 32 OF 51

NOTICE OF PROPRIETARY PROPERTY:
THE INFORMATION CONTAINED HEREIN IS THE PROPRIETARY PROPERTY OF APPLE INC.
THE POSESSOR AGREES TO THE FOLLOWING:
I TO MAINTAIN THIS DOCUMENT IN CONFIDENCE
II NOT TO REPRODUCE OR COPY IT
III NOT TO REVEAL OR PUBLISH IT IN WHOLE OR PART
IV ALL RIGHTS RESERVED

PDF Watermark Remover DEMO : Purchase from www.PDFWatermarkRemover.com to remove the watermark

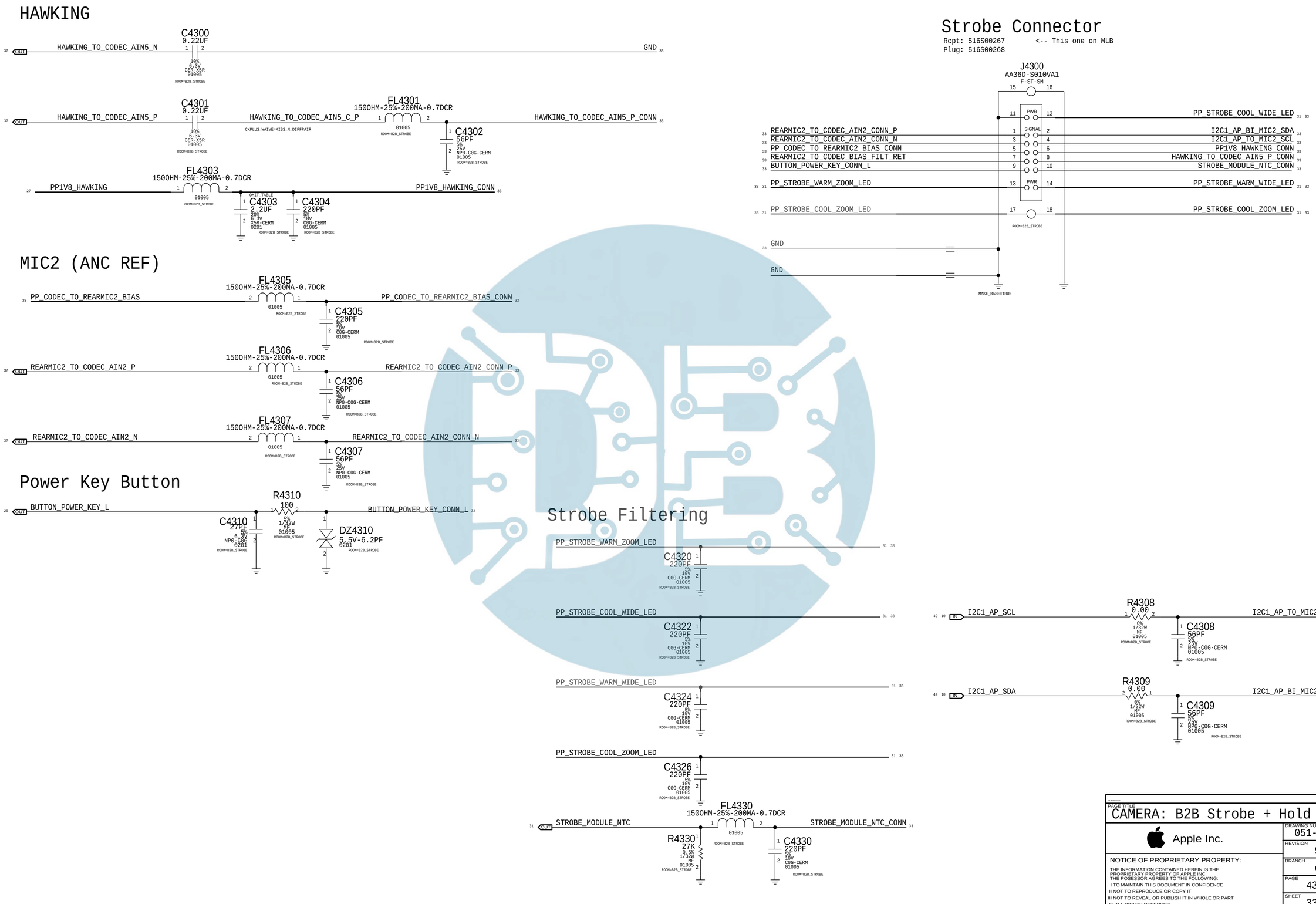

PAGE TITLE
CAMERA: B2B Strobe + Hold Button

Apple Inc.

DRAWING NUMBER 051-02221 SIZE D
REVISION 9.0.0
BRANCH evt-1
PAGE 43 OF 80
SHEET 33 OF 51

NOTICE OF PROPRIETARY PROPERTY:
THE INFORMATION CONTAINED HEREIN IS THE PROPRIETARY PROPERTY OF APPLE INC.
THE POSESSOR AGREES TO THE FOLLOWING:
I TO MAINTAIN THIS DOCUMENT IN CONFIDENCE
II NOT TO REPRODUCE OR COPY IT
III NOT TO REVEAL OR PUBLISH IT IN WHOLE OR PART
IV ALL RIGHTS RESERVED

PDF Watermark Remover DEMO : Purchase from www.PDFWatermarkRemover.com to remove the watermark

Rigel Driver

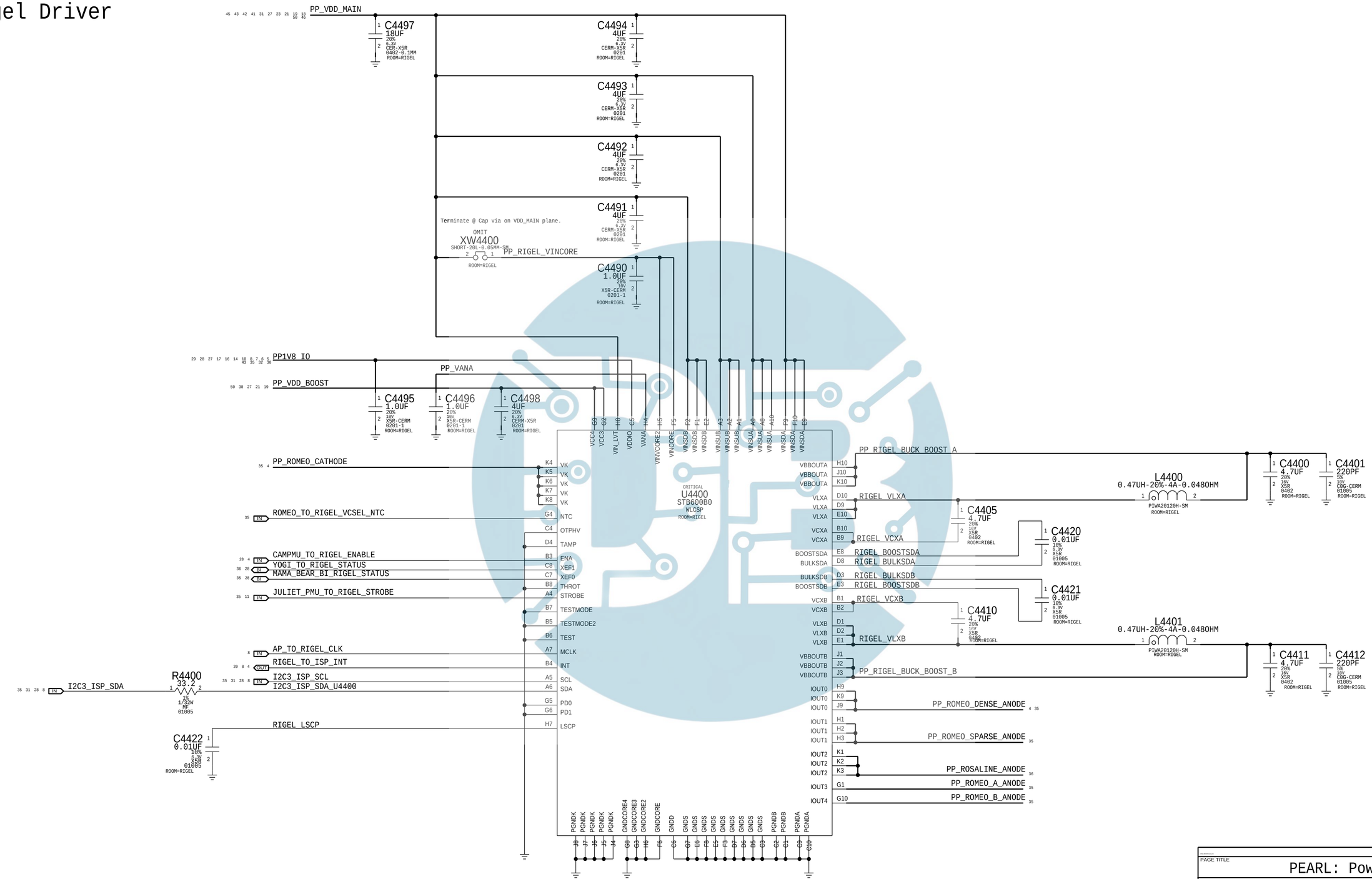

PAGE TITLE

PEARL: Power

Apple Inc.

DRAWING NUMBER	051-02221
SIZE	D
REVISION	9.0.0
BRANCH	evt-1
PAGE	44 OF 80
SHEET	34 OF 51

NOTICE OF PROPRIETARY PROPERTY:

THE INFORMATION CONTAINED HEREIN IS THE PROPRIETARY PROPERTY OF APPLE INC.
THE POSESSOR AGREES TO THE FOLLOWING:

I TO MAINTAIN THIS DOCUMENT IN CONFIDENCE

II NOT TO REPRODUCE OR COPY IT

III NOT TO REVEAL OR PUBLISH IT IN WHOLE OR PART

IV ALL RIGHTS RESERVED

PDF Watermark Remover DEMO : Purchase from www.PDFWatermarkRemover.com to remove the watermark

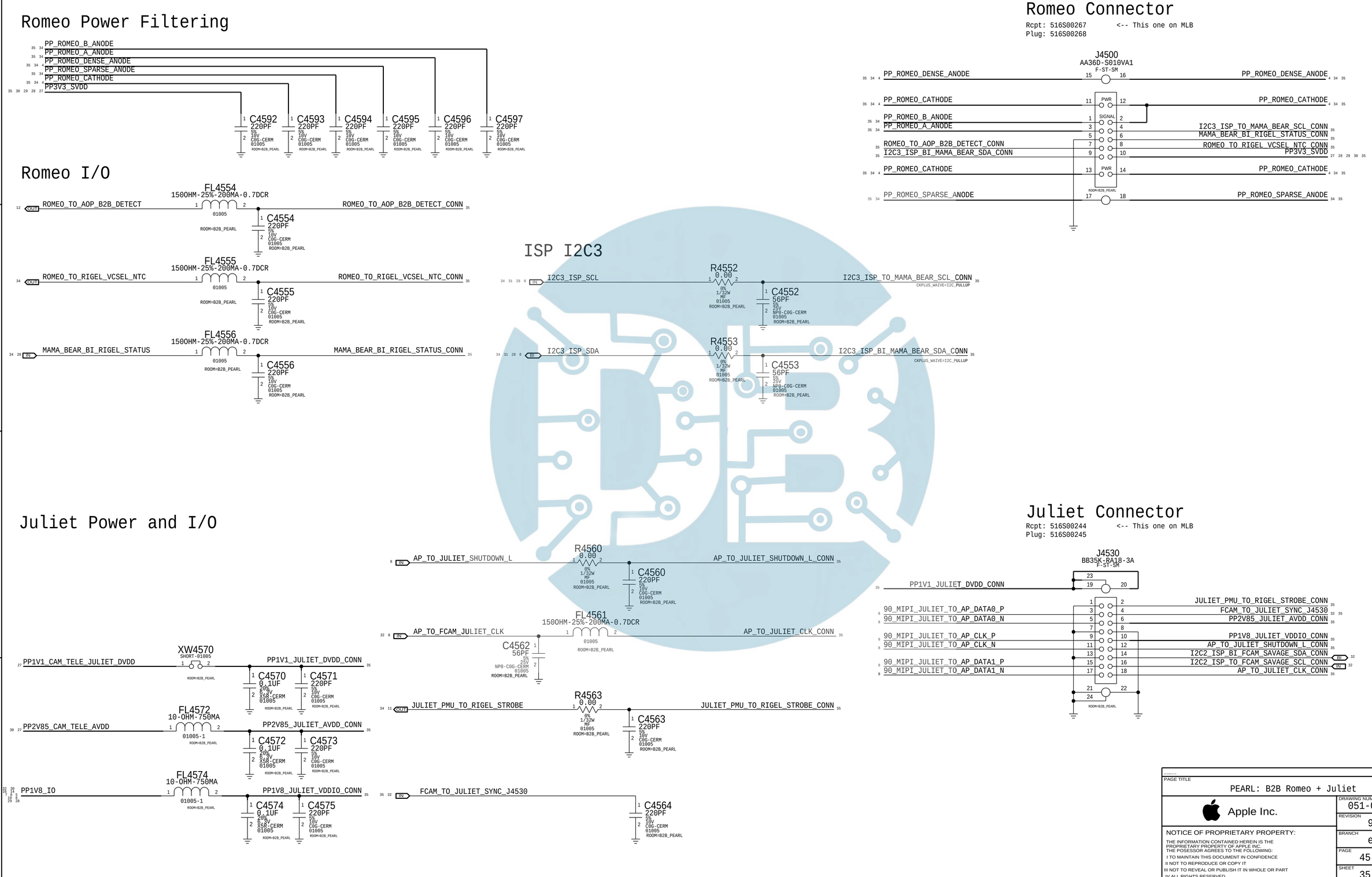

PDF Watermark Remover DEMO : Purchase from www.PDFWatermarkRemover.com to remove the watermark

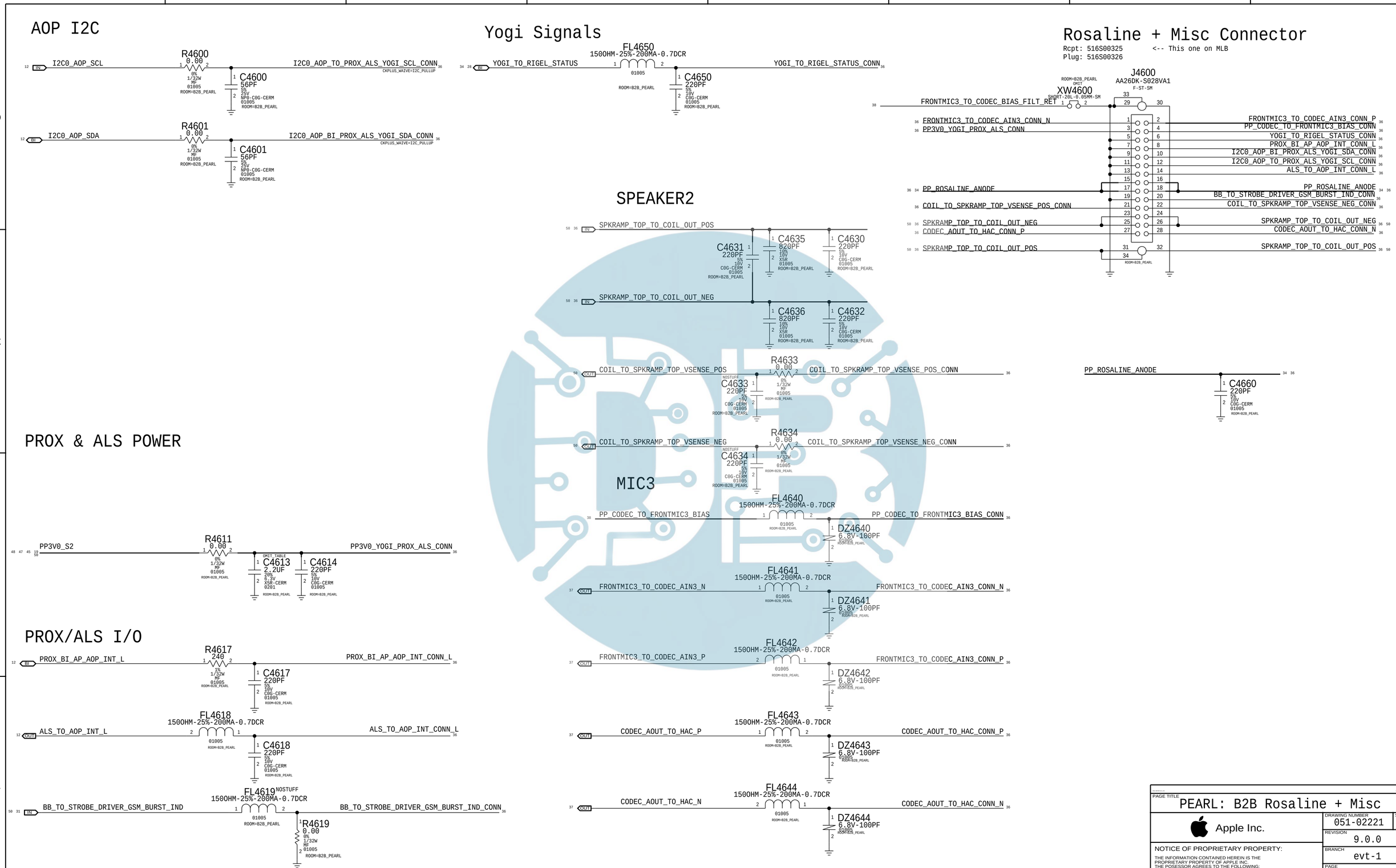

PAGE TITLE
PEARL: B2B Rosaline + Misc

Apple Inc.

DRAWING NUMBER 051-02221 SIZE D
REVISION 9.0.0
BRANCH evt-1
PAGE 46 OF 80
SHEET 36 OF 51

NOTICE OF PROPRIETARY PROPERTY:
THE INFORMATION CONTAINED HEREIN IS THE PROPRIETARY PROPERTY OF APPLE INC.
THE POSESSOR AGREES TO THE FOLLOWING:
I TO MAINTAIN THIS DOCUMENT IN CONFIDENCE
II NOT TO REPRODUCE OR COPY IT
III NOT TO REVEAL OR PUBLISH IT IN WHOLE OR PART
IV ALL RIGHTS RESERVED

PDF Watermark Remover DEMO : Purchase from www.PDFWatermarkRemover.com to remove the watermark

CALLAN AUDIO CODEC (ANALOG INPUTS & OUTPUTS)

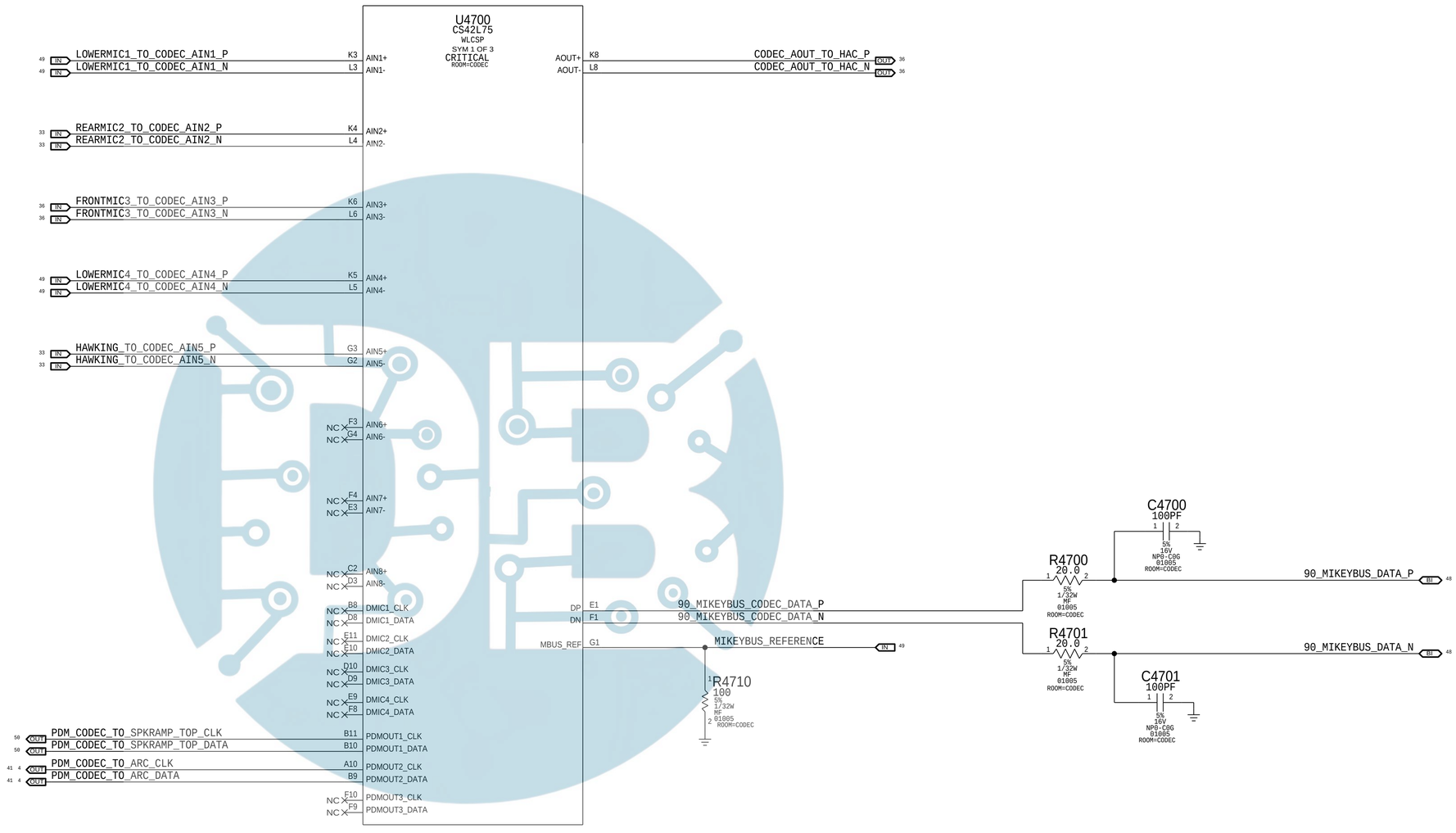

PAGE TITLE

AUDIO: CODEC (1/2)

Apple Inc.

DRAWING NUMBER	051-02221
SIZE	D
REVISION	9.0.0
BRANCH	evt-1
PAGE	47 OF 80
SHEET	37 OF 51

NOTICE OF PROPRIETARY PROPERTY:

THE INFORMATION CONTAINED HEREIN IS THE PROPRIETARY PROPERTY OF APPLE INC.
THE POSESSOR AGREES TO THE FOLLOWING:

I TO MAINTAIN THIS DOCUMENT IN CONFIDENCE

II NOT TO REPRODUCE OR COPY IT

III NOT TO REVEAL OR PUBLISH IT IN WHOLE OR PART

IV ALL RIGHTS RESERVED

PDF Watermark Remover DEMO : Purchase from www.PDFWatermarkRemover.com to remove the watermark

CALLAN AUDIO CODEC (POWER & I/O)

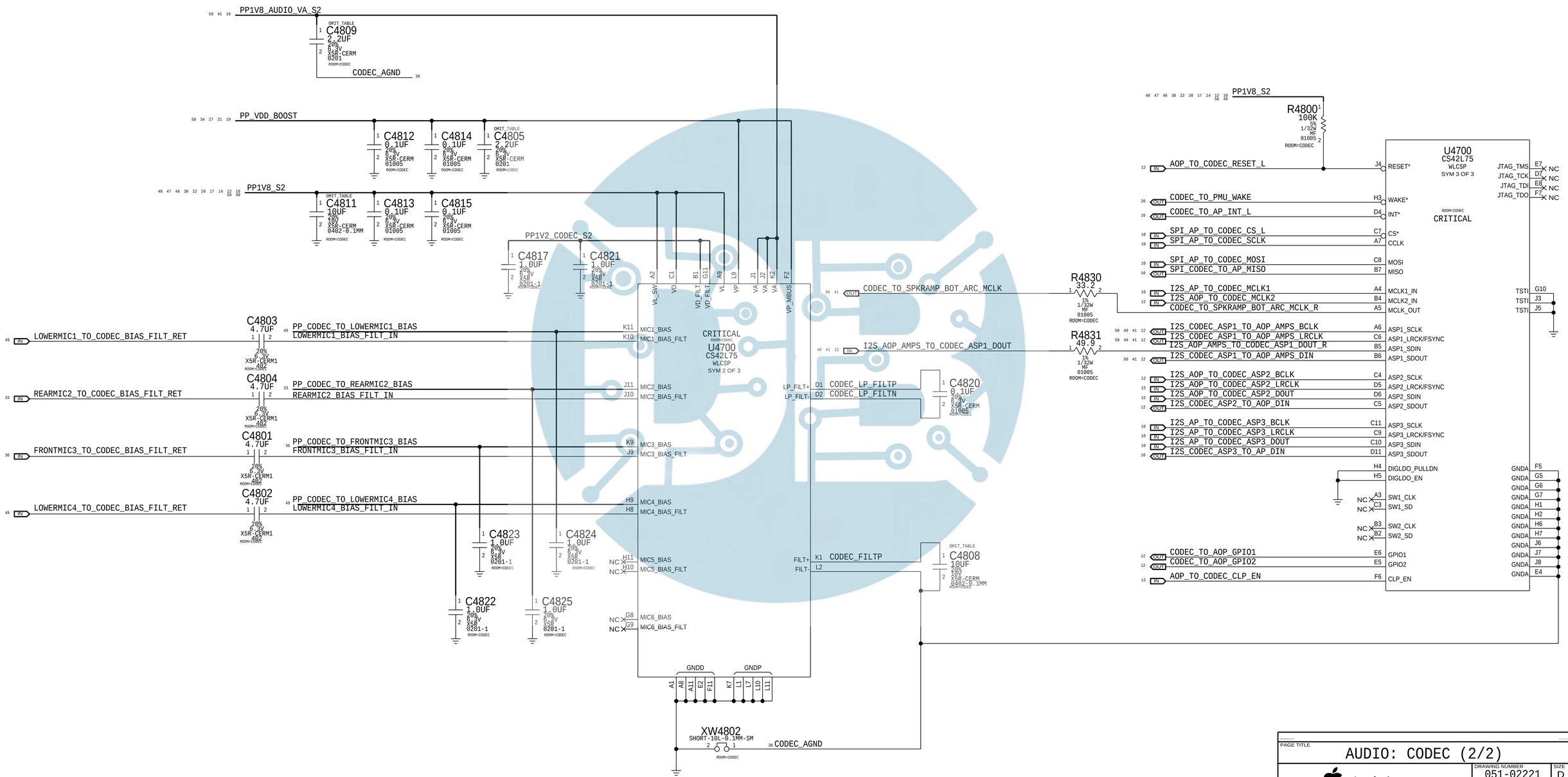

PAGE TITLE

AUDIO: CODEC (2/2)

Apple Inc.

DRAWING NUMBER	051-02221
SIZE	D
REVISION	9.0.0
BRANCH	evt-1
PAGE	48 OF 80
SHEET	38 OF 51

NOTICE OF PROPRIETARY PROPERTY:

THE INFORMATION CONTAINED HEREIN IS THE PROPRIETARY PROPERTY OF APPLE INC.
THE POSESSOR AGREES TO THE FOLLOWING:

I TO MAINTAIN THIS DOCUMENT IN CONFIDENCE

II NOT TO REPRODUCE OR COPY IT

III NOT TO REVEAL OR PUBLISH IT IN WHOLE OR PART

IV ALL RIGHTS RESERVED

PDF Watermark Remover DEMO : Purchase from www.PDFWatermarkRemover.com to remove the watermark

South Speaker Amplifier on MLB Bottom

SYNC_DATE=08/25/2015

PAGE TITLE
AUDIO: Speaker Amp Bottom

Apple Inc.

DRAWING NUMBER 051-02221
SIZE D
REVISION 9.0.0
BRANCH evt-1
PAGE 49 OF 80
SHEET 39 OF 51

NOTICE OF PROPRIETARY PROPERTY:
THE INFORMATION CONTAINED HEREIN IS THE PROPRIETARY PROPERTY OF APPLE INC.
THE POSESSOR AGREES TO THE FOLLOWING:
I TO MAINTAIN THIS DOCUMENT IN CONFIDENCE
II NOT TO REPRODUCE OR COPY IT
III NOT TO REVEAL OR PUBLISH IT IN WHOLE OR PART
IV ALL RIGHTS RESERVED

PDF Watermark Remover DEMO : Purchase from www.PDFWatermarkRemover.com to remove the watermark

North Speaker Amplifier on MLB Bottom

SYNC_DATE=08/25/2015

PAGE TITLE
AUDIO: Speaker Amp Top

Apple Inc.

DRAWING NUMBER 051-02221
SIZE D
REVISION 9.0.0
BRANCH evt-1
PAGE 50 OF 80
SHEET 40 OF 51

NOTICE OF PROPRIETARY PROPERTY:
THE INFORMATION CONTAINED HEREIN IS THE PROPRIETARY PROPERTY OF APPLE INC.
THE POSESSOR AGREES TO THE FOLLOWING:
I TO MAINTAIN THIS DOCUMENT IN CONFIDENCE
II NOT TO REPRODUCE OR COPY IT
III NOT TO REVEAL OR PUBLISH IT IN WHOLE OR PART
IV ALL RIGHTS RESERVED

PDF Watermark Remover DEMO : Purchase from www.PDFWatermarkRemover.com to remove the watermark

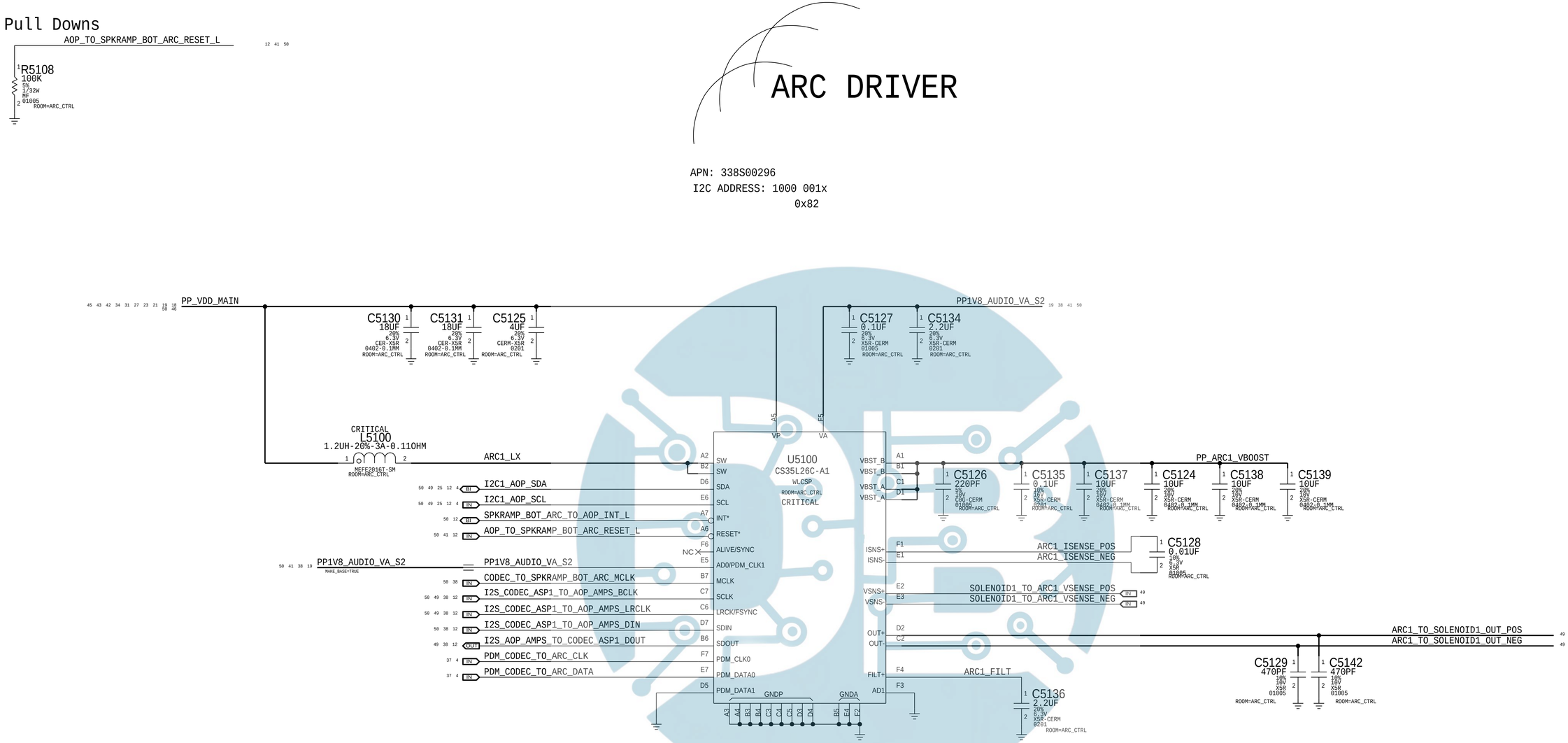

PAGE TITLE	ARC: Driver
Apple Inc.	DRAWING NUMBER 051-02221 SIZE D
	REVISION 9.0.0
	BRANCH evt-1
	PAGE 51 OF 80
	SHEET 41 OF 51

NOTICE OF PROPRIETARY PROPERTY:
THE INFORMATION CONTAINED HEREIN IS THE PROPRIETARY PROPERTY OF APPLE INC.
THE POSESSOR AGREES TO THE FOLLOWING:
I TO MAINTAIN THIS DOCUMENT IN CONFIDENCE
II NOT TO REPRODUCE OR COPY IT
III NOT TO REVEAL OR PUBLISH IT IN WHOLE OR PART
IV ALL RIGHTS RESERVED

PDF Watermark Remover DEMO : Purchase from www.PDFWatermarkRemover.com to remove the watermark

Acorn PMU

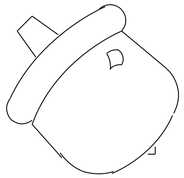

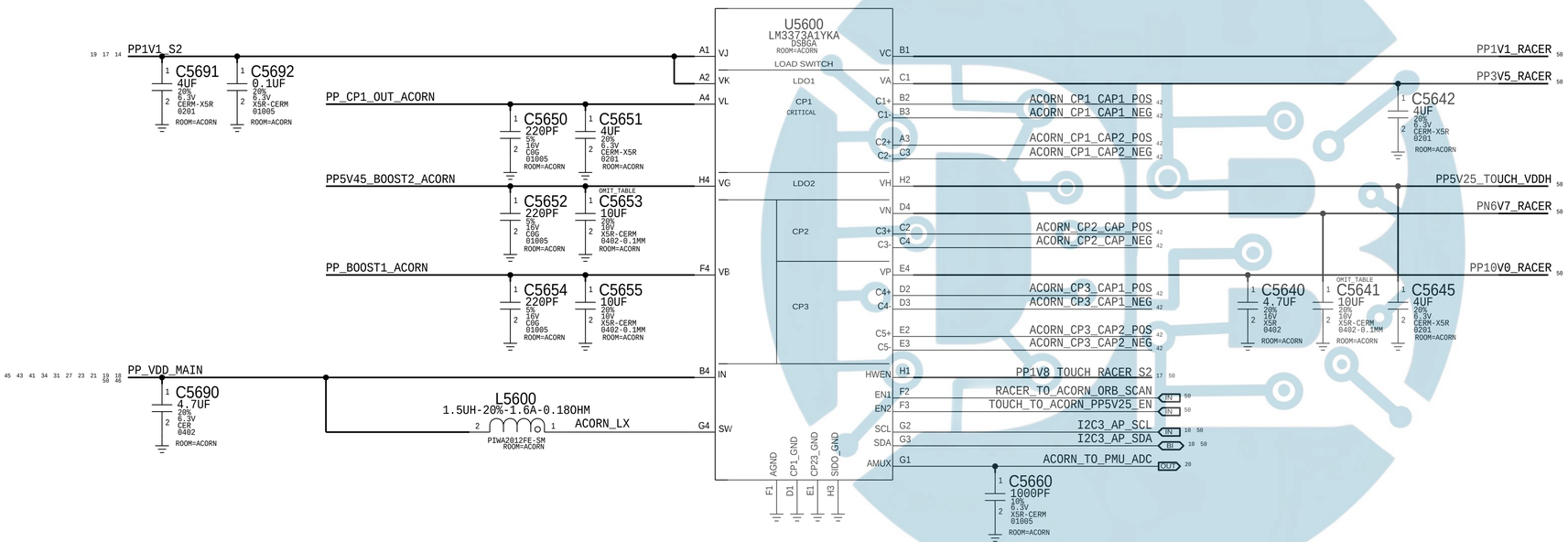

Charge Pump 1 Caps

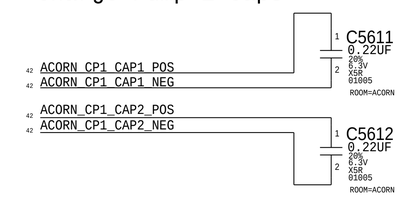

Charge Pump 2 Caps

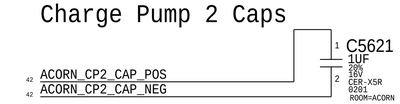

Charge Pump 3 Caps

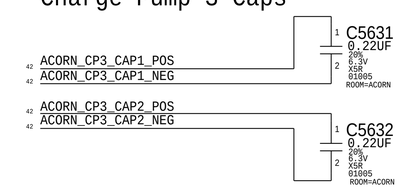

PAGE TITLE
CG: Power Supplies - Touch & Display

Apple Inc.

DRAWING NUMBER 051-02221 SIZE D
REVISION 9.0.0
BRANCH evt-1
PAGE 56 OF 80
SHEET 42 OF 51

NOTICE OF PROPRIETARY PROPERTY:
THE INFORMATION CONTAINED HEREIN IS THE PROPRIETARY PROPERTY OF APPLE INC.
THE POSESSOR AGREES TO THE FOLLOWING:
I TO MAINTAIN THIS DOCUMENT IN CONFIDENCE
II NOT TO REPRODUCE OR COPY IT
III NOT TO REVEAL OR PUBLISH IT IN WHOLE OR PART
IV ALL RIGHTS RESERVED

PDF Watermark Remover DEMO : Purchase from www.PDFWatermarkRemover.com to remove the watermark

Display Control Signals

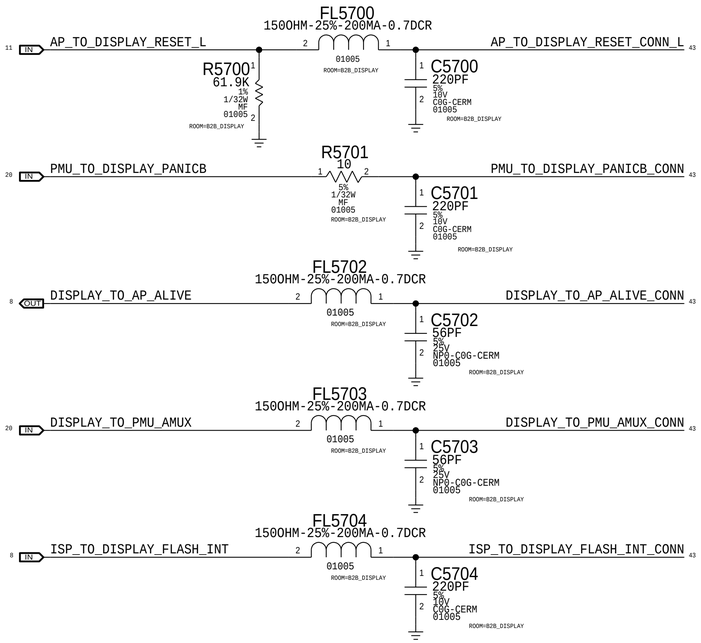

Display Flex Connector

Rcpt: 516S00210 <-- This one on MLB
Plug: 516S00211

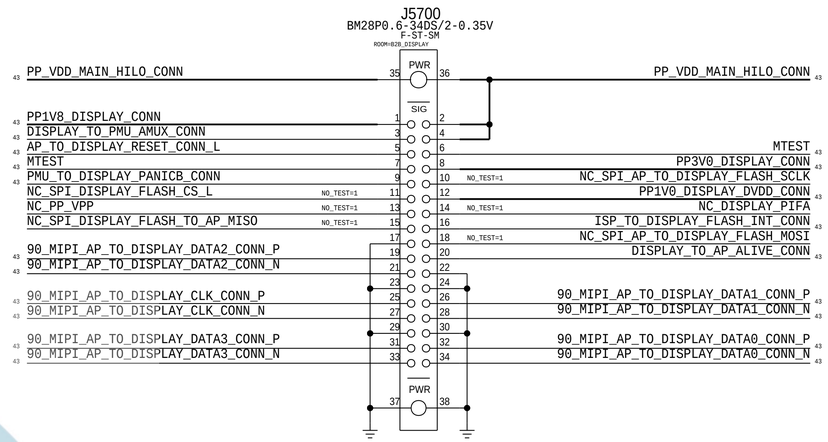

Display MIPI

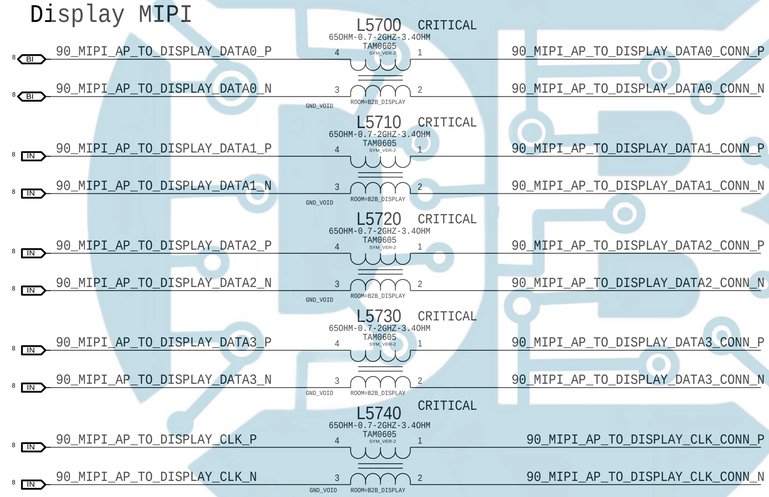

Display Power

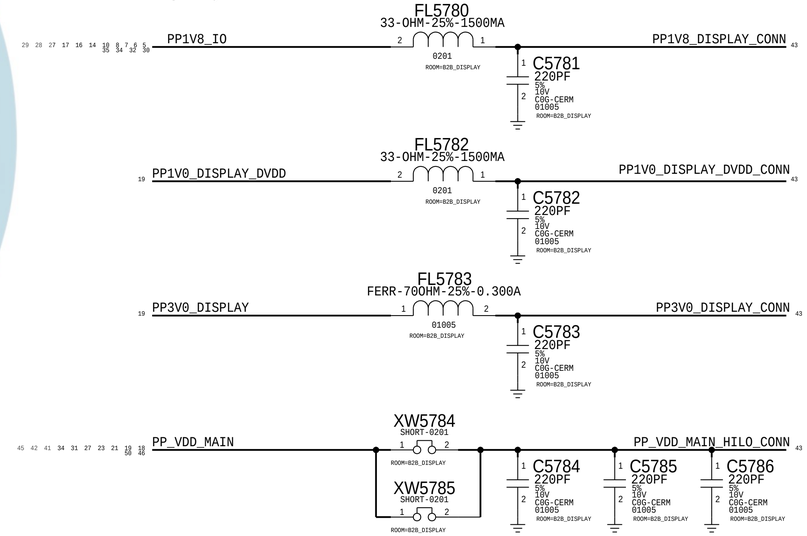

PAGE TITLE	CG: B2B Display
Apple Inc.	DRAWING NUMBER 051-02221 SIZE D
	REVISION 9.0.0
	BRANCH evt-1
	PAGE 57 OF 80
	SHEET 43 OF 51

NOTICE OF PROPRIETARY PROPERTY:
THE INFORMATION CONTAINED HEREIN IS THE PROPRIETARY PROPERTY OF APPLE INC.
THE POSESSOR AGREES TO THE FOLLOWING:
I TO MAINTAIN THIS DOCUMENT IN CONFIDENCE
II NOT TO REPRODUCE OR COPY IT
III NOT TO REVEAL OR PUBLISH IT IN WHOLE OR PART
IV ALL RIGHTS RESERVED

PDF Watermark Remover DEMO : Purchase from www.PDFWatermarkRemover.com to remove the watermark

Orb + Touch Connector on MLB Bottom

SYNC_DATE=08/25/2015

PAGE TITLE
CG: B2B Orb & Touch

Apple Inc.

DRAWING NUMBER 051-02221
SIZE D
REVISION 9.0.0
BRANCH evt-1
PAGE 58 OF 80
SHEET 44 OF 51

NOTICE OF PROPRIETARY PROPERTY:
THE INFORMATION CONTAINED HEREIN IS THE PROPRIETARY PROPERTY OF APPLE INC.
THE POSESSOR AGREES TO THE FOLLOWING:
I TO MAINTAIN THIS DOCUMENT IN CONFIDENCE
II NOT TO REPRODUCE OR COPY IT
III NOT TO REVEAL OR PUBLISH IT IN WHOLE OR PART
IV ALL RIGHTS RESERVED

PDF Watermark Remover DEMO : Purchase from www.PDFWatermarkRemover.com to remove the watermark

VDD_MAIN OV CUT-OFF CIRCUIT

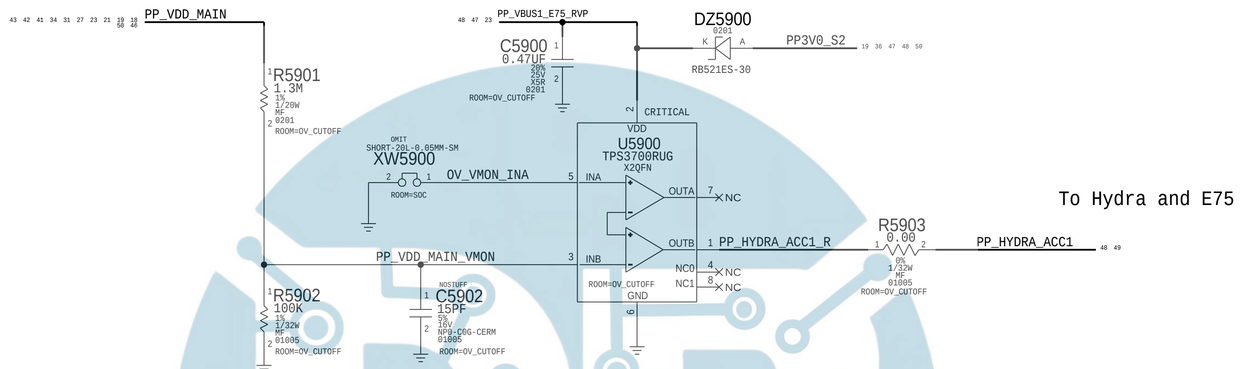

PAGE TITLE
I/O: Overvoltage Cut-Off Circuit

Apple Inc.

DRAWING NUMBER 051-02221 SIZE D
REVISION 9.0.0
BRANCH evt-1
PAGE 59 OF 80
SHEET 45 OF 51

NOTICE OF PROPRIETARY PROPERTY:
THE INFORMATION CONTAINED HEREIN IS THE PROPRIETARY PROPERTY OF APPLE INC.
THE POSESSOR AGREES TO THE FOLLOWING:
I TO MAINTAIN THIS DOCUMENT IN CONFIDENCE
II NOT TO REPRODUCE OR COPY IT
III NOT TO REVEAL OR PUBLISH IT IN WHOLE OR PART
IV ALL RIGHTS RESERVED

PDF Watermark Remover DEMO : Purchase from www.PDFWatermarkRemover.com to remove the watermark

ACCESSORY BUCK

I2C ADDRESS: 0x52

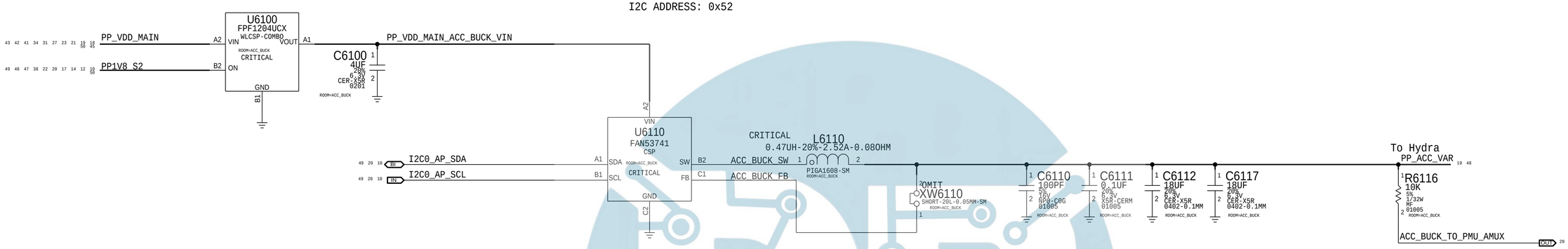

PAGE TITLE

I/O: Accessory Buck

Apple Inc.

DRAWING NUMBER 051-02221

SIZE D

REVISION 9.0.0

BRANCH evt-1

PAGE 61 OF 80

SHEET 46 OF 51

NOTICE OF PROPRIETARY PROPERTY:

THE INFORMATION CONTAINED HEREIN IS THE PROPRIETARY PROPERTY OF APPLE INC.
THE POSESSOR AGREES TO THE FOLLOWING:

I TO MAINTAIN THIS DOCUMENT IN CONFIDENCE

II NOT TO REPRODUCE OR COPY IT

III NOT TO REVEAL OR PUBLISH IT IN WHOLE OR PART

IV ALL RIGHTS RESERVED

PDF Watermark Remover DEMO : Purchase from www.PDFWatermarkRemover.com to remove the watermark

USB-PD

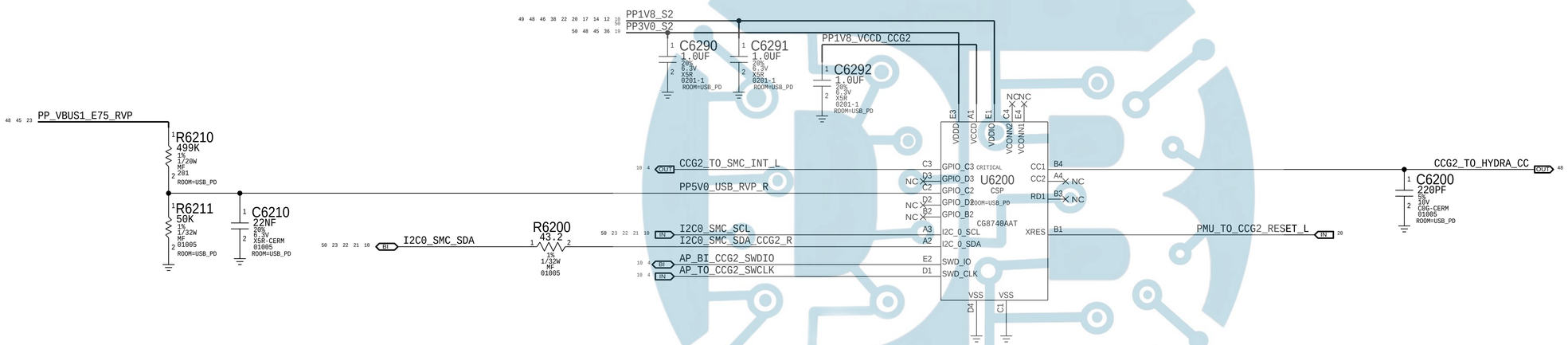

PAGE TITLE

I/O: USB PD

Apple Inc.

DRAWING NUMBER	051-02221
SIZE	D
REVISION	9.0.0
BRANCH	evt-1
PAGE	62 OF 80
SHEET	47 OF 51

NOTICE OF PROPRIETARY PROPERTY:
THE INFORMATION CONTAINED HEREIN IS THE PROPRIETARY PROPERTY OF APPLE INC.
THE POSESSOR AGREES TO THE FOLLOWING:
I TO MAINTAIN THIS DOCUMENT IN CONFIDENCE
II NOT TO REPRODUCE OR COPY IT
III NOT TO REVEAL OR PUBLISH IT IN WHOLE OR PART
IV ALL RIGHTS RESERVED

PDF Watermark Remover DEMO : Purchase from www.PDFWatermarkRemover.com to remove the watermark

Hydra

I2C Address: 0011010X

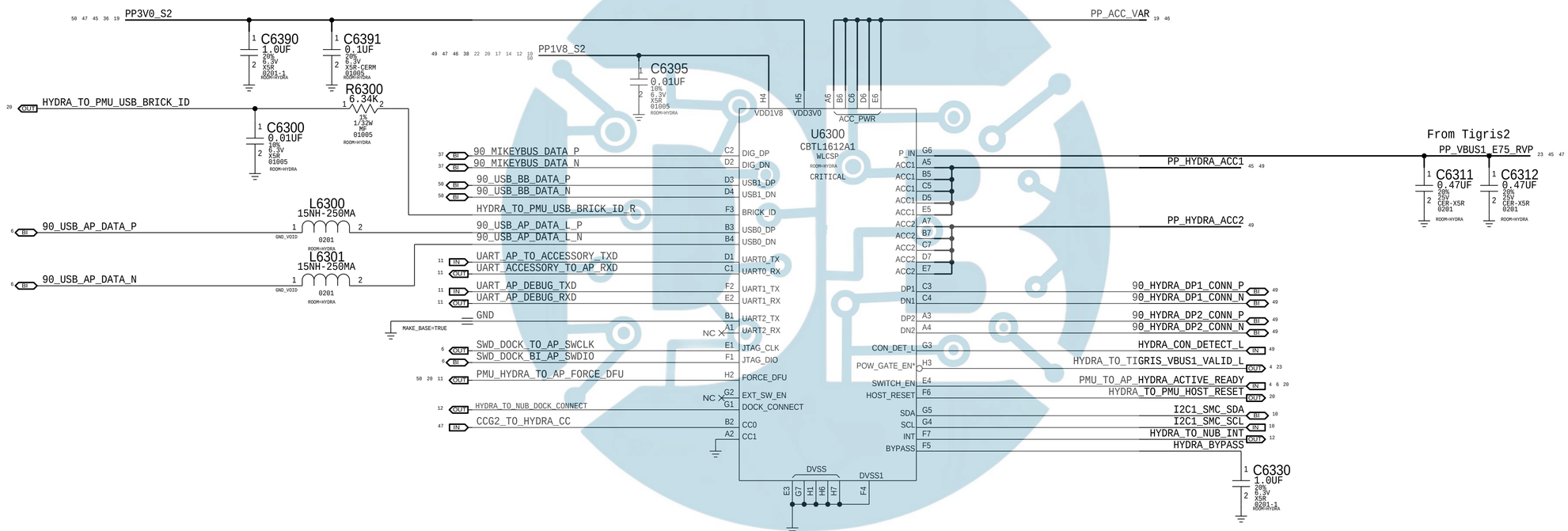

PAGE TITLE

I/O: Hydra

Apple Inc.

DRAWING NUMBER	051-02221
SIZE	D
REVISION	9.0.0
BRANCH	evt-1
PAGE	63 OF 80
SHEET	48 OF 51

NOTICE OF PROPRIETARY PROPERTY:

THE INFORMATION CONTAINED HEREIN IS THE PROPRIETARY PROPERTY OF APPLE INC.
THE POSESSOR AGREES TO THE FOLLOWING:

I TO MAINTAIN THIS DOCUMENT IN CONFIDENCE
II NOT TO REPRODUCE OR COPY IT
III NOT TO REVEAL OR PUBLISH IT IN WHOLE OR PART
IV ALL RIGHTS RESERVED

PDF Watermark Remover DEMO : Purchase from www.PDFWatermarkRemover.com to remove the watermark

ARC

FL6400 1500HM-25%-200MA-0.7DCR 01005 ROOM=B2B_DOCK
PP1V8_S2 → PP1V8_SAKONNET_CONN
C6400 220PF 5% 10V C0G-CERM 01005 ROOM=B2B_DOCK

I2C0_AP_SCL → I2C0_AP_TO_SAKONNET_SCL_CONN (CKPLUS_WAIVE=I2C_PULLUP)
R6416 0.00 0% 1/32W MF 01005 ROOM=B2B_DOCK
C6416 56PF 5% 25V NP0-C0G-CERM 01005 ROOM=B2B_DOCK

I2C0_AP_SDA → I2C0_AP_BI_SAKONNET_SDA_CONN (CKPLUS_WAIVE=I2C_PULLUP)
R6418 0.00 0% 1/32W MF 01005 ROOM=B2B_DOCK
C6418 56PF 5% 25V NP0-C0G-CERM 01005 ROOM=B2B_DOCK

I2S_CODEC_ASP1_TO_AOP_AMPS_BCLK → I2S_CODEC_ASP1_TO_AOP_AMPS_BCLK_CONN
R6419 49.9 1% 1/32W MF 01005 ROOM=B2B_DOCK
C6419 68PF 5% 25V NP0-C0G-CERM 01005 ROOM=B2B_DOCK

I2S_CODEC_ASP1_TO_AOP_AMPS_LRCLK → I2S_CODEC_ASP1_TO_AOP_AMPS_LRCLK_CONN
R6420 49.9 1% 1/32W MF 01005 ROOM=B2B_DOCK
C6420 68PF 5% 25V NP0-C0G-CERM 01005 ROOM=B2B_DOCK

I2S_AOP_AMPS_TO_CODEC_ASP1_DOUT → I2S_AOP_AMPS_TO_CODEC_ASP1_DOUT_CONN
R6421 49.9 1% 1/32W MF 01005 ROOM=B2B_DOCK
C6421 68PF 5% 25V NP0-C0G-CERM 01005 ROOM=B2B_DOCK

ARC1_TO_SOLENOID1_OUT_POS
ARC1_TO_SOLENOID1_OUT_NEG
C6472 820PF 10% 10V X5R 01005 ROOM=B2B_DOCK
C6471 220PF 5% 10V C0G-CERM 01005 ROOM=B2B_DOCK
C6470 220PF 5% 10V C0G-CERM 01005 ROOM=B2B_DOCK
C6473 820PF 10% 10V X5R 01005 ROOM=B2B_DOCK

DOCK FLEX CONNECTOR

Rcpt: 516S00038 <-- This one on MLB
Plug: 516S00037

J6400 BM28P0.6-44DS-0.35V F-ST-SM

Pin	Signal	Pin	Signal
45	SPKRAMP_BOT_TO_COIL_OUT_NEG	46	
1	SPKRAMP_BOT_TO_COIL_OUT_POS	2	
3	COIL_TO_SPKRAMP_BOT_VSENSE_POS_CONN	4	90_HYDRA_DP1_CONN_P
5	COIL_TO_SPKRAMP_BOT_VSENSE_NEG_CONN	6	90_HYDRA_DP1_CONN_N
7		8	
9	PP_CODEC_TO_LOWERMIC4_BIAS_CONN	10	90_HYDRA_DP2_CONN_N
11	LOWERMIC4_TO_CODEC_BIAS_FILT_RET	12	90_HYDRA_DP2_CONN_P
13	LOWERMIC4_TO_CODEC_AIN4_CONN_N	14	
15	LOWERMIC4_TO_CODEC_AIN4_CONN_P	16	PP_HYDRA_ACC1_CONN
17	PP1V8_IMU_COMPASS_DOCK_CONN	18	MIKEYBUS_REFERENCE
19	I2C1_AOP_BI_COMPASS_SDA_DOCK_CONN	20	HYDRA_CON_DETECT_CONN_L
21	I2C1_AOP_TO_COMPASS_SCL_DOCK_CONN	22	PP1V8_SAKONNET_CONN
23	COMPASS_TO_AOP_INT_DOCK_CONN	24	I2S_CODEC_ASP1_TO_AOP_AMPS_LRCLK_CONN
25		26	I2C0_AP_BI_SAKONNET_SDA_CONN
27	LOWERMIC1_TO_CODEC_AIN1_CONN_P	28	I2C0_AP_TO_SAKONNET_SCL_CONN
29	LOWERMIC1_TO_CODEC_AIN1_CONN_N	30	I2S_CODEC_ASP1_TO_AOP_AMPS_BCLK_CONN
31	LOWERMIC1_TO_CODEC_BIAS_FILT_RET	32	I2S_AOP_AMPS_TO_CODEC_ASP1_DOUT_CONN
33	PP_CODEC_TO_LOWERMIC1_BIAS_CONN	34	
35	I2C1_AP_BI_MIC1_SDA_CONN	36	PP_HYDRA_ACC2_CONN
37	I2C1_AP_TO_MIC1_SCL_CONN	38	
39		40	ARC1_TO_SOLENOID1_OUT_NEG
41	SOLENOID1_TO_ARC1_VSENSE_NEG	42	
43	SOLENOID1_TO_ARC1_VSENSE_POS	44	ARC1_TO_SOLENOID1_OUT_POS
47		48	

ROOM=B2B_DOCK

PP_VBUS1_E75
C6490 0.1UF 10% 25V X5R 0201 ROOM=B2B_DOCK
C6491 0.1UF 10% 25V X5R 0201 ROOM=B2B_DOCK
C6492 0.1UF 10% 25V X5R 0201 ROOM=B2B_DOCK
C6493 220PF 5% 25V C0G 01005 ROOM=B2B_DOCK
C6494 220PF 5% 25V C0G 01005 ROOM=B2B_DOCK
C6495 0.1UF 10% 25V X5R 0201 ROOM=B2B_DOCK
C6496 0.1UF 10% 25V X5R 0201 ROOM=B2B_DOCK
C6497 0.1UF 10% 25V X5R 0201 ROOM=B2B_DOCK

Compass (Dock Flex Location)

NOSTUFF FL6430 1500HM-25%-200MA-0.7DCR 01005 ROOM=B2B_DOCK
PP1V8_IMU_S2 → PP1V8_IMU_COMPASS_DOCK_CONN
NOSTUFF C6430 220PF 5% 10V C0G-CERM 01005 ROOM=B2B_DOCK

I2C1_AOP_SCL → I2C1_AOP_TO_COMPASS_SCL_DOCK_CONN (CKPLUS_WAIVE=I2C_PULLUP)
NOSTUFF R6431 0.00 0% 1/32W MF 01005 ROOM=B2B_DOCK
NOSTUFF C6431 56PF 5% 25V NP0-C0G-CERM 01005 ROOM=B2B_DOCK

I2C1_AOP_SDA → I2C1_AOP_BI_COMPASS_SDA_DOCK_CONN (CKPLUS_WAIVE=I2C_PULLUP)
NOSTUFF R6432 0.00 0% 1/32W MF 01005 ROOM=B2B_DOCK
NOSTUFF C6432 56PF 5% 25V NP0-C0G-CERM 01005 ROOM=B2B_DOCK

COMPASS_TO_AOP_INT → COMPASS_TO_AOP_INT_DOCK_CONN
NOSTUFF FL6433 1500HM-25%-200MA-0.7DCR 01005 ROOM=B2B_DOCK
NOSTUFF C6433 220PF 5% 10V C0G-CERM 01005 ROOM=B2B_DOCK

Hydra

HYDRA_CON_DETECT_L → HYDRA_CON_DETECT_CONN_L
R6410 100 5% 1/32W MF 01005 ROOM=B2B_DOCK
C6410 27PF 5% 10V NP0-C0G 01005 ROOM=B2B_DOCK

PP_HYDRA_ACC1 → PP_HYDRA_ACC1_CONN
FL6411 10-OHM-1.1A 01005 ROOM=B2B_DOCK
C6411 220PF 5% 10V C0G-CERM 01005 ROOM=B2B_DOCK

PP_HYDRA_ACC2 → PP_HYDRA_ACC2_CONN
FL6413 22-OHM-25%-1800MA- 0201 ROOM=B2B_DOCK
C6413 220PF 5% 10V C0G-CERM 01005 ROOM=B2B_DOCK

SOUTH SPEAKER

COIL_TO_SPKRAMP_BOT_VSENSE_POS → COIL_TO_SPKRAMP_BOT_VSENSE_POS_CONN
FL6480 1500HM-25%-200MA-0.7DCR 01005 ROOM=B2B_DOCK
NOSTUFF C6480 220PF 5% 10V C0G-CERM 01005 ROOM=B2B_DOCK

COIL_TO_SPKRAMP_BOT_VSENSE_NEG → COIL_TO_SPKRAMP_BOT_VSENSE_NEG_CONN
FL6482 1500HM-25%-200MA-0.7DCR 01005 ROOM=B2B_DOCK
NOSTUFF C6482 220PF 5% 10V C0G-CERM 01005 ROOM=B2B_DOCK

SPKRAMP_BOT_TO_COIL_OUT_POS
C6484 820PF 10% 10V X5R 01005 ROOM=B2B_DOCK
C6483 220PF 5% 10V C0G-CERM 01005 ROOM=B2B_DOCK

SPKRAMP_BOT_TO_COIL_OUT_NEG
C6486 820PF 10% 10V X5R 01005 ROOM=B2B_DOCK
C6485 220PF 5% 10V C0G-CERM 01005 ROOM=B2B_DOCK

LOWER MIC1 + LOWER MIC4

LOWERMIC1_TO_CODEC_AIN1_P → LOWERMIC1_TO_CODEC_AIN1_CONN_P
FL6450 1500HM-25%-200MA-0.7DCR 01005 ROOM=B2B_DOCK
C6450 56PF 5% 25V NP0-C0G-CERM 01005 ROOM=B2B_DOCK

LOWERMIC1_TO_CODEC_AIN1_N → LOWERMIC1_TO_CODEC_AIN1_CONN_N
FL6452 1500HM-25%-200MA-0.7DCR 01005 ROOM=B2B_DOCK
C6452 56PF 5% 25V NP0-C0G-CERM 01005 ROOM=B2B_DOCK

PP_CODEC_TO_LOWERMIC1_BIAS → PP_CODEC_TO_LOWERMIC1_BIAS_CONN
FL6454 1500HM-25%-200MA-0.7DCR 01005 ROOM=B2B_DOCK
C6454 220PF 5% 10V C0G-CERM 01005 ROOM=B2B_DOCK

LOWERMIC4_TO_CODEC_AIN4_P → LOWERMIC4_TO_CODEC_AIN4_CONN_P
FL6460 1500HM-25%-200MA-0.7DCR 01005 ROOM=B2B_DOCK
C6460 56PF 5% 25V NP0-C0G-CERM 01005 ROOM=B2B_DOCK

LOWERMIC4_TO_CODEC_AIN4_N → LOWERMIC4_TO_CODEC_AIN4_CONN_N
FL6462 1500HM-25%-200MA-0.7DCR 01005 ROOM=B2B_DOCK
C6462 56PF 5% 25V NP0-C0G-CERM 01005 ROOM=B2B_DOCK

PP_CODEC_TO_LOWERMIC4_BIAS → PP_CODEC_TO_LOWERMIC4_BIAS_CONN
FL6464 1500HM-25%-200MA-0.7DCR 01005 ROOM=B2B_DOCK
C6464 220PF 5% 10V C0G-CERM 01005 ROOM=B2B_DOCK

I2C1_AP_SCL → I2C1_AP_TO_MIC1_SCL_CONN (CKPLUS_WAIVE=I2C_PULLUP)
R6465 0.00 0% 1/32W MF 01005 ROOM=B2B_DOCK
C6465 56PF 5% 25V NP0-C0G-CERM 01005 ROOM=B2B_DOCK

I2C1_AP_SDA → I2C1_AP_BI_MIC1_SDA_CONN (CKPLUS_WAIVE=I2C_PULLUP)
R6466 0.00 0% 1/32W MF 01005 ROOM=B2B_DOCK
C6466 56PF 5% 25V NP0-C0G-CERM 01005 ROOM=B2B_DOCK

PAGE TITLE: I/O: B2B Dock

Apple Inc.

DRAWING NUMBER: 051-02221 SIZE: D
REVISION: 9.0.0
BRANCH: evt-1
PAGE: 64 OF 80
SHEET: 49 OF 51

NOTICE OF PROPRIETARY PROPERTY:
THE INFORMATION CONTAINED HEREIN IS THE PROPRIETARY PROPERTY OF APPLE INC.
THE POSESSOR AGREES TO THE FOLLOWING:
I TO MAINTAIN THIS DOCUMENT IN CONFIDENCE
II NOT TO REPRODUCE OR COPY IT
III NOT TO REVEAL OR PUBLISH IT IN WHOLE OR PART
IV ALL RIGHTS RESERVED

PDF Watermark Remover DEMO : Purchase from www.PDFWatermarkRemover.com to remove the watermark

J_INT_BOT — INTERPOSER-BOT-D22 (SMT-PAD, SYM 3 OF 3) — SIGNAL

Pin	Net	Source
S1	UART_AP_TO_GNSS_TXD	11
S2	UART_AP_TO_GNSS_RTS_L	11
S3	UART_GNSS_TO_AP_CTS_L	11
S4	UART_GNSS_TO_AP_RXD	11
S5	AP_TO_GNSS_WAKE	11
S6	PMU_TO_GNSS_EN	20
S7	AP_TO_BB_TIME_MARK	11
S8	90_PCIE_AP_TO_BB_REFCLK_N	7
S9		
S10	90_PCIE_AP_TO_BB_REFCLK_P	7
S11	90_PCIE_BB_TO_AP_RXD_P	7
S12	90_PCIE_BB_TO_AP_RXD_N	7
S13	90_PCIE_AP_TO_BB_TXD_P	7
S14		
S15	90_PCIE_AP_TO_BB_TXD_N	7
S16	90_PCIE_WLAN_TO_AP_RXD_P	7
S17		
S18	90_PCIE_WLAN_TO_AP_RXD_N	7
S19	90_PCIE_AP_TO_WLAN_REFCLK_N	7
S20		
S21	90_PCIE_AP_TO_WLAN_REFCLK_P	7
S22	90_PCIE_AP_TO_WLAN_TXD_N	7
S23		
S24	90_PCIE_AP_TO_WLAN_TXD_P	7
S25		
S26		
S27	PMU_TO_IKTARA_EN_EXT_1P8V	20
S28	IKTARA_TO_SMC_INT	10
S29	I2C0_SMC_SCL	47 23 22 21 10
S30	I2C0_SMC_SDA	47 23 22 21 10
S31	BB_TO_STROBE_DRIVER_GSM_BURST_IND	36 31
S32	NC	
S33	PDM_CODEC_TO_SPKRAMP_TOP_CLK	37
S34	PDM_CODEC_TO_SPKRAMP_TOP_DATA	37
S35	PCIE_AP_TO_BB_RESET_L	7
S36	I2S_AP_TO_SPKRAMP_TOP_MCLK	10
S37	AP_TO_SPKRAMP_TOP_RESET_L	11
S38	SPKRAMP_TOP_TO_AP_INT_L	11
S39	I2C2_AP_SDA	10
S40	I2C2_AP_SCL	10
S41	PP1V8_AUDIO_VA_S2	41 38 19
S42	PP_GPU_LVCC	4
S43	PP_CPU_PCORE_LVCC	4
S44	AP_TO_BB_IPC_GPIO1	11
S45	AP_TO_BB_RESET_L	11
S46	HALL3_TO_AOP_IRQ_L	12
S47	NC	
S48		
S49	BOARD_ID3	10 5
S50	PCIE_WLAN_BI_AP_CLKREQ_L	7
S51	PCIE_AP_TO_WLAN_RESET_L	7
S52	I2S_CODEC_ASP1_TO_AOP_AMPS_BCLK	49 41 38 12
S53	I2S_CODEC_ASP1_TO_AOP_AMPS_DIN	41 38 12
S54	I2S_CODEC_ASP1_TO_AOP_AMPS_LRCLK	49 41 38 12
S55	PMU_TO_IKTARA_RESET_L	20
S56	I2S_BB_TO_AP_DIN	10
S57	I2S_BB_TO_AP_LRCLK	10
S58	I2S_BB_TO_AP_BCLK	10
S59	I2S_AP_TO_BB_DOUT	10
S60	BB_TO_AP_RESET_DETECT_L	11
S61	AP_TO_BBPMU_RADIO_ON_L	11
S62	AP_TO_WLAN_DEVICE_WAKE	11
S63	SPKRAMP_BOT_ARC_TO_AOP_INT_L	41 12
S64	AOP_TO_SPKRAMP_BOT_ARC_RESET_L	41 12
S65	NC	
S66	SWD_AOP_BI_BB_SWDIO	12
S67	I2C1_AOP_SDA	49 41 25 12 4
S68	I2C1_AOP_SCL	49 41 25 12 4
S69	PP_VDD_MAIN	43 42 41 34 31 27 23 21 19 18 50 46 45
S70		
S71		
S72		
S73		
S74		
S75		
S76		
S77	UART_AP_TO_BT_RTS_L	11
S78	UART_BT_TO_AP_CTS_L	11
S79	UART_AP_TO_BT_TXD	11
S80	UART_BT_TO_AP_RXD	11
S81	PP_VDD_BOOST	38 34 27 21 19
S82	UART_AP_TO_WLAN_TXD	11
S83	UART_AP_TO_WLAN_RTS_L	11
S84	UART_WLAN_TO_AP_RXD	11
S85	UART_WLAN_TO_AP_CTS_L	11
S86	PP1V8_S2	48 47 46 38 22 20 17 14 12 10 50 49

Pin	Net	Source
S87	PP1V8_S2	18 12 50 14 17 20 22 38 46 47 48
S88		
S89	PP_VDD_MAIN	18 19 21 45 40 50 23 27 31 34 41 42 43
S90	BB_TO_PMU_PCIE_HOST_WAKE_L	20
S91	PMU_TO_BBPMU_RESET_L	20
S92	PMU_AMUX_AY	20
S93	AOP_TO_WLAN_CONTEXT_B	12
S94	UART_BB_TO_AOP_RXD	12
S95	UART_AOP_TO_BB_TXD	12
S96	AOP_TO_WLAN_CONTEXT_A	12
S97	BT_TO_PMU_HOST_WAKE	20
S98	PMU_TO_BT_REG_ON	20
S99	PMU_TO_WLAN_CLK32K	20
S100	WLAN_TO_PMU_HOST_WAKE	20
S101	PMU_TO_WLAN_REG_ON	20
S102	PMU_AMUX_BY	20
S103	CODEC_TO_SPKRAMP_BOT_ARC_MCLK	38 41
S104	PMU_TO_BB_USB_VBUS_DETECT	20
S105	PMU_HYDRA_TO_AP_FORCE_DFU	11 20 48
S106	AP_TO_BT_WAKE	11
S107	WLAN_TO_AP_TIME_SYNC	11
S108	RADIO_PA_NTC	20
S109	AP_TO_MANY_BSYNC	8 12 20 21 28
S110	TOUCH_TO_AMUX_PP1V8	20
S111	PP3V5_RACER	42
S112	PP1V1_RACER	42
S113		
S114	PP5V25_TOUCH_VDDH	42
S115	RACER_TO_ACORN_ORB_SCAN	42
S116	PP1V8_TOUCH_RACER_S2	17 42
S117	I2C3_AP_SCL	10 42
S118	I2C3_AP_SDA	10 42
S119	TOUCH_TO_ACORN_PP5V25_EN	42
S120	PN6V7_RACER	42
S121	PMU_TO_TOUCH_CLK32K_RESET_L	20
S122	PP10V0_RACER	42
S123	AP_TO_RACER_RESET_L	11
S124	RACER_TO_AOP_INT_L	12
S125	SWD_AOP_TO_MANY_SWCLK	4 12 16
S126	SWD_AOP_BI_RACER_SWDIO	12
S127	UART_AOP_TO_RACER_TXD	12
S128	UART_RACER_TO_AOP_RXD	12
S129	HALL2_TO_AOP_IRQ_L	12
S130	AP_TO_RACER_REF_CLK	10
S131	SPI_AP_TO_RACER_CS_L	10
S132	SPI_RACER_TO_AP_MISO	10
S133	SPI_AP_TO_RACER_MOSI	10
S134	SPI_AP_TO_RACER_SCLK	10
S135	PP_BATT_VCC	22 23
S136		
S137	PP3V0_S2	19 36 45 47 48
S138		
S139	90_USB_BB_DATA_P	48
S140	90_USB_BB_DATA_N	48
S141		
S142	PP_VBUS2_IKTARA	23
S143		
S144		
S145		
S146	IKTARA_COIL2	25
S147		
S148		
S149		
S150	IKTARA_COIL1	25
S151		
S152		
S153		
S154	AP_TO_BB_COREDUMP	11
S155	PCIE_BB_BI_AP_CLKREQ_L	7
S156	SPKRAMP_TOP_TO_COIL_OUT_POS	36
S157	SPKRAMP_TOP_TO_COIL_OUT_NEG	36
S158	COIL_TO_SPKRAMP_TOP_VSENSE_POS	36
S159	COIL_TO_SPKRAMP_TOP_VSENSE_NEG	36
S160	COIL_TO_SPKRAMP_BOT_VSENSE_POS	49
S161	COIL_TO_SPKRAMP_BOT_VSENSE_NEG	49
S162	SPKRAMP_BOT_TO_COIL_OUT_POS	49
S163	SPKRAMP_BOT_TO_COIL_OUT_NEG	49
S164	AP_TO_NFC_DEV_WAKE	11
S165	UART_NFC_TO_AP_CTS_L	11
S166	UART_AP_TO_NFC_TXD	11
S167	UART_NFC_TO_AP_RXD	11
S168	UART_AP_TO_NFC_RTS_L	11
S169	AP_TO_NFC_FW_DWLD_REQ	11
S170	NFC_TO_PMU_HOST_WAKE	20
S171	PMU_TO_NFC_EN	20
S172	NC	

J_INT_BOT — INTERPOSER-BOT-D22 (SMT-PAD, SYM 1 OF 3) — GND

Pin	Pin
IOG1	IOG63
IOG2	IOG64
IOG3	IOG65
IOG4	IOG66
IOG5	IOG67
IOG6	IOG68
IOG7	IOG69
IOG8	IOG70
IOG9	IOG71
IOG10	IOG72
IOG11	IOG73
IOG12	IOG74
IOG13	IOG75
IOG14	IOG76
IOG15	IOG77
IOG16	IOG78
IOG17	IOG79
IOG18	IOG80
IOG19	IOG81
IOG20	IOG82
IOG21	IOG83
IOG22	IOG84
IOG23	IOG85
IOG24	IOG86
IOG25	IOG87
IOG26	IOG88
IOG27	IOG89
IOG28	IOG90
IOG29	IOG91
IOG30	IOG92
IOG31	IOG93
IOG32	IOG94
IOG33	IOG95
IOG34	IOG96
IOG35	IOG97
IOG36	IOG98
IOG37	IOG99
IOG38	IOG100
IOG39	IOG101
IOG40	IOG102
IOG41	IOG103
IOG42	IOG104
IOG43	IOG105
IOG44	IOG106
IOG45	IOG107
IOG46	IOG108
IOG47	IOG109
IOG48	IOG110
IOG49	IOG111
IOG50	IOG112
IOG51	IOG113
IOG52	IOG114
IOG53	IOG115
IOG54	IOG116
IOG55	IOG117
IOG56	IOG118
IOG57	IOG119
IOG58	IOG120
IOG59	IOG121
IOG60	IOG122
IOG61	IOG123
IOG62	IOG124

J_INT_BOT — INTERPOSER-BOT-D22 (SMT-PAD, SYM 2 OF 3) — GND

Pin	Pin
IOG125	IOG187
IOG126	IOG188
IOG127	IOG189
IOG128	IOG190
IOG129	IOG191
IOG130	IOG192
IOG131	IOG193
IOG132	IOG194
IOG133	IOG195
IOG134	IOG196
IOG135	IOG197
IOG136	IOG198
IOG137	IOG199
IOG138	IOG200
IOG139	IOG201
IOG140	IOG202
IOG141	IOG203
IOG142	IOG204
IOG143	IOG205
IOG144	IOG206
IOG145	IOG207
IOG146	IOG208
IOG147	IOG209
IOG148	IOG210
IOG149	IOG211
IOG150	IOG212
IOG151	IOG213
IOG152	IOG214
IOG153	IOG215
IOG154	IOG216
IOG155	IOG217
IOG156	IOG218
IOG157	IOG219
IOG158	IOG220
IOG159	IOG221
IOG160	IOG222
IOG161	IOG223
IOG162	IOG224
IOG163	IOG225
IOG164	IOG226
IOG165	IOG227
IOG166	IOG228
IOG167	IOG229
IOG168	IOG230
IOG169	IOG231
IOG170	IOG232
IOG171	IOG233
IOG172	IOG234
IOG173	IOG235
IOG174	IOG236
IOG175	IOG237
IOG176	IOG238
IOG177	IOG239
IOG178	IOG240
IOG179	IOG241
IOG180	IOG242
IOG181	IOG243
IOG182	IOG244
IOG183	IOG245
IOG184	IOG246
IOG185	IOG247
IOG186	IOG248

PAGE TITLE

I/O: Interposer (Bottom)

Apple Inc.

DRAWING NUMBER	051-02221
SIZE	D
REVISION	9.0.0
BRANCH	evt-1
PAGE	65 OF 80
SHEET	50 OF 51

NOTICE OF PROPRIETARY PROPERTY:
THE INFORMATION CONTAINED HEREIN IS THE PROPRIETARY PROPERTY OF APPLE INC.
THE POSESSOR AGREES TO THE FOLLOWING:
I TO MAINTAIN THIS DOCUMENT IN CONFIDENCE
II NOT TO REPRODUCE OR COPY IT
III NOT TO REVEAL OR PUBLISH IT IN WHOLE OR PART
IV ALL RIGHTS RESERVED

PDF Watermark Remover DEMO : Purchase from www.PDFWatermarkRemover.com to remove the watermark

Radios on MLB Bottom

SYNC_DATE=06/04/2015

PAGE TITLE

RADIOS

Apple Inc.

DRAWING NUMBER 051-02221

SIZE D

REVISION 9.0.0

BRANCH evt-1

PAGE 80 OF 80

SHEET 51 OF 51

NOTICE OF PROPRIETARY PROPERTY:

THE INFORMATION CONTAINED HEREIN IS THE PROPRIETARY PROPERTY OF APPLE INC.
THE POSESSOR AGREES TO THE FOLLOWING:

I TO MAINTAIN THIS DOCUMENT IN CONFIDENCE

II NOT TO REPRODUCE OR COPY IT

III NOT TO REVEAL OR PUBLISH IT IN WHOLE OR PART

IV ALL RIGHTS RESERVED

PDF Watermark Remover DEMO : Purchase from www.PDFWatermarkRemover.com to remove the watermark

1. ALL RESISTANCE VALUES ARE IN OHMS, 0.1 WATT +/- 5%.
2. ALL CAPACITANCE VALUES ARE IN MICROFARADS.
3. ALL CRYSTALS & OSCILLATOR VALUES ARE IN HERTZ.

REV	ECN	DESCRIPTION OF REVISION	CK APPD / DATE
7	0008448938	ENGINEERING RELEASED	2017-04-11

X893 MLB Bottom: EVT

LAST_MODIFICATION=Tue Apr 11 16:10:11 2017

PAGE	CSA	CONTENTS	SYNC	DATE
1	1	TABLE OF CONTENTS		07/29/2016
2	2	SYSTEM:BOM Tables		03/08/2017
3	4	SYSTEM: Mechanical Components		12/01/2016
4	6	BOOTSTRAPPING		11/03/2016
5	7	SYSTEM: Testpoints (Bottom)	test_mlb	01/17/2017
6	34	SYSTEM POWER: Iktara	mlb_bot	04/04/2017
7	49	AUDIO: Speaker Amp Bottom	mlb_bot	04/04/2017
8	50	AUDIO: Speaker Amp Top	mlb_bot	04/04/2017
9	55	HALL EFFECT	mlb_bot	04/04/2017
10	58	CG: B2B Luna & Touch	mlb_bot	04/04/2017
11	66	I/O: Interposer (Top)	mlb_bot	04/04/2017
12	80	RADIOS		07/29/2016
13	1	RADIO_MLB		
14	2	BASEBAND		
15	3	BASEBAND MEMORY/DEBUG		
16	4	BASEBAND POWER		
17	5	BASEBAND PMIC		
18	6	TRANSCEIVERS		
19	7	ET MODULATOR		
20	8	TDD TRANSMIT		
21	9	FDD TRANSMIT		
22	10	PRIMARY RECEIVE		
23	11	LOWER ANTENNA & COUPLERS		
24	12	DIVERSITY RECEIVE ASM'S		
25	13	DIVERSITY RECEIVE LNA'S		
26	14	UPPER ANTENNA FEEDS		
27	15	GNSS		
28	16	TEST POINTS & SIM		
29	17	RF CONNECTORS AND MC		
30	1	SymbolPorts		
31	4	Guinness	WIFI	01/30/2014
32	5	WiFiANTFeeds		
33	1	page1		
34	75	NFC		

PAGE	CSA	CONTENTS	SYNC	DATE

Sub Designs

SOURCE PROJECT	SUB-DESIGN NAME	VERSION	HARD/SOFT	SYNC_DATE/TIME
D221	RADIO_MLB	0.115.0	S	2017_04_05_18:48:43
D22	NFC_MLB	0.22.0	S	2017_03_22_22:11:23
D22	WIFI_MLB	0.20.0	S	2017_04_04_09:54:33

BOM:639-03229
MCO:056-04080

PART#	QTY	DESCRIPTION	REFERENCE DESIGNATOR(S)	CRITICAL	BOM OPTION
051-02247	1	SCH,MLB_BOT,X893	SCH	NO	COMMON
820-00869	1	PCB,MLB_BOT,X893	PCB	NO	COMMON

TABLE OF CONTENTS
SYNC_DATE=07/29/2016

DRAWING TITLE: SCH,MLB,BOT,X893

Apple Inc.

DRAWING NUMBER: 051-02247 SIZE: D
REVISION: 7.0.0
BRANCH: evt-1
PAGE: 1 OF 80
SHEET: 1 OF 34

NOTICE OF PROPRIETARY PROPERTY:
THE INFORMATION CONTAINED HEREIN IS THE PROPRIETARY PROPERTY OF APPLE INC.
THE POSESSOR AGREES TO THE FOLLOWING:
I TO MAINTAIN THIS DOCUMENT IN CONFIDENCE
II NOT TO REPRODUCE OR COPY IT
III NOT TO REVEAL OR PUBLISH IT IN WHOLE OR PART
IV ALL RIGHTS RESERVED

PDF Watermark Remover DEMO : Purchase from www.PDFWatermarkRemover.com to remove the watermark

EEEE Codes

PART#	QTY	DESCRIPTION	REFERENCE DESIGNATOR(S)	CRITICAL	BOM OPTION
825-7691	1	EEEE FOR (MLB_BOT, 639-03229)	EEEE_HM07	NO	COMMON

Global Capacitors

PART NUMBER	ALTERNATE FOR PART NUMBER	BOM OPTION	REF DES	COMMENTS:
138S00148	138S00149	BOM_TABLE_ALTS	ALL	0402-3T,10.5uF@1V, Kyocera
138S00150	138S00149	BOM_TABLE_ALTS	ALL	0402-3T,10.5uF@1V, SEMCO
138S00151	138S00149	BOM_TABLE_ALTS	ALL	0402-3T,10.5uF@1V, TY

CRITICAL PART#	COMMENT
138S00149	0402-3T,10.5uF@1V

PART NUMBER	ALTERNATE FOR PART NUMBER	BOM OPTION	REF DES	COMMENTS:
138S00143	138S00144	BOM_TABLE_ALTS	ALL	0402,16uF@1V, Kyocera
138S00163	138S00144	BOM_TABLE_ALTS	ALL	0402,16uF@1V, Taiyo

CRITICAL PART#	COMMENT
138S00144	0402,16uF@1V

PART NUMBER	ALTERNATE FOR PART NUMBER	BOM OPTION	REF DES	COMMENTS:
138S00138	138S00139	BOM_TABLE_ALTS	ALL	0201,3uF@1V, Kyocera
138S00164	138S00139	BOM_TABLE_ALTS	ALL	0201,3uF@1V, Taiyo

CRITICAL PART#	COMMENT
138S00139	0201,3uF@1V

PART NUMBER	ALTERNATE FOR PART NUMBER	BOM OPTION	REF DES	COMMENTS:
138S00145	138S00146	BOM_TABLE_ALTS	ALL	0402,5.1uF@3V, Kyocera
138S00165	138S00146	BOM_TABLE_ALTS	ALL	0402,5.1uF@3V, Taiyo

CRITICAL PART#	COMMENT
138S00146	0402,5.1uF@3V

PART NUMBER	ALTERNATE FOR PART NUMBER	BOM OPTION	REF DES	COMMENTS:
138S00140	138S00141	BOM_TABLE_ALTS	ALL	0201,1.1uF@3V, Kyocera
138S00142	138S00141	BOM_TABLE_ALTS	ALL	0201,1.1uF@3V, SEMCO
138S00166	138S00141	BOM_TABLE_ALTS	ALL	0201,1.1uF@3V, Taiyo

CRITICAL PART#	COMMENT
138S00141	0201,1.1uF@3V

Global Ferrites

PART NUMBER	ALTERNATE FOR PART NUMBER	BOM OPTION	REF DES	COMMENTS:
152S00558	152S00557	BOM_TABLE_ALTS	ALL	IND,MLD,0.47UH,20%,2.5A,80MΩ,1608
155S00194	155S0610	BOM_TABLE_ALTS	ALL	FERR BD,150 OHM,25%,200MA,0.7 DCR,01005
155S00200	155S0610	BOM_TABLE_ALTS	ALL	FERR BD,150 OHM,25%,200MA,0.7 DCR,01005

CRITICAL PART#	COMMENT
152S00557	IND,MLD,0.47UH,20%,2.5A,80MΩ,1608
155S0610	FERR BD,150 OHM,25%,200MA,0.7 DCR,01005

Global R/C Alternates

PART NUMBER	ALTERNATE FOR PART NUMBER	BOM OPTION	REF DES	COMMENTS:
138S0648	138S0652	BOM_TABLE_ALTS	ALL	CAP,X5R,4.7UF,6.3V,0.65MM,0402,TAIYO
138S00024	138S0986	BOM_TABLE_ALTS	ALL	CAP,CER,3-TERM,7.5UF,20%,4V,0402,TAIYO/TDK
138S0706	138S0739	BOM_TABLE_ALTS	ALL	CAP,CER,1UF,20%,10V,X5R,0201,MURATA
138S0945	138S0739	BOM_TABLE_ALTS	ALL	CAP,CER,1UF,20%,10V,X5R,0201,KYOCERA
138S0739	138S0706	BOM_TABLE_ALTS	ALL	CAP,CER,X5R,0.22UF,20%,6.3V,20%
132S0436	132S0400	BOM_TABLE_ALTS	ALL	CAP,CER,X5R,0.22UF,20%,6.3V,01005
138S00049	138S0831	BOM_TABLE_ALTS	ALL	CAP,CER,X5R,2.2UF,20%,6.3V,0201

CRITICAL PART#	COMMENT
138S0652	CAP,X5R,4.7UF,6.3V,0.65MM,0402,TAIYO
138S0986	CAP,CER,3-TERM,7.5UF,20%,4V,0402,TAIYO/TDK
138S0739	CAP,CER,1UF,20%,10V,X5R,0201,MURATA
138S0706	CAP,CER,X5R,0.22UF,20%,6.3V,20%
132S0400	CAP,CER,X5R,0.22UF,20%,6.3V,01005
138S0831	CAP,CER,X5R,2.2UF,20%,6.3V,0201

Global Inductors

PART NUMBER	ALTERNATE FOR PART NUMBER	BOM OPTION	REF DES	COMMENTS:
152S00653	152S00651	BOM_TABLE_ALTS	ALL	IND,1.2UH,3A,2016,0.65Ω
152S00654	152S00652	BOM_TABLE_ALTS	ALL	IND,1.2UH,3A,2016,0.8Ω

CRITICAL PART#	COMMENT
152S00651	IND,1.2UH,3A,2016,0.65Ω
152S00652	IND,1.2UH,3A,2016,0.8Ω

Multi-Vendor Criticals

CRITICAL PART#	COMMENT
138S0979	CAP,CER,X5R,10UF,20%,10V,0402,H=0.65MM
138S0683	CAP,CER,X5R,1UF,10%,25V,0402
132S0663	CAP,CER,X5R,1UF,10%,25V,0402
132S0288	CAP,CER,X5R,0.1UF,10%,16V,0201
132S0275	CAP,CER,X5R,470PF,10%,10V,01005
132S0245	CAP,CER,X5R,0.01UF,10%,6.3V,01005

CRITICAL PART#	COMMENT
132S00008	CAP,CER,0.1UF,10%,50V,X7R,0402
131S0804	CAP,CER,27PF,5%,C0G,25V,0201
131S0307	CAP,CER,NPO/C0G,100PF,5%,16V,01005
131S00053	CAP,CER,C0G,220PF,5%,10V,01005
117S0055	RES,MF,1/20W,2M OHM,5,0201,SMD
107S0257	THERMISTOR,NTC,10K OHM,1%,B=3435,01005

Iktara

PART#	QTY	DESCRIPTION	REFERENCE DESIGNATOR(S)	CRITICAL	BOM OPTION
132S00021	8	CAP,CER,0.082UF,10%,50V,X7R,0402	C3452,C3453,C3454,C3455,C3461,C3462,C3463,C3464	NO	COMMON
132S0423	2	CAP,CER,0.022UF,50V,X7R,10%,0402	C3451,C3465	CRITICAL	COMMON
132S0423	2	CAP,CER,0.022UF,50V,X7R,10%,0402	C3455,C3466	CRITICAL	NOSTUFF

PART NUMBER	ALTERNATE FOR PART NUMBER	BOM OPTION	REF DES	COMMENTS:
685-00185	685-00184	BOM_TABLE_ALTS	SUBBOM_DS	SUBBOM,MLB,BOT,DIODES,ONSEMI,X893

PART#	QTY	DESCRIPTION	REFERENCE DESIGNATOR(S)	CRITICAL	BOM OPTION
685-00184	1	SUBBOM,MLB,BOT,DIODES,DIODES,X893	SUBBOM_DS	CRITICAL	COMMON
371S00133	4	DIODES,SHOTTKY DIODE,30V,2A,0603	D3400,D3401,D3402,D3403	CRITICAL	DIODES_DS
371S00132	4	ONSEMI,SHOTTKY DIODE,30V,2A,0603	D3400,D3401,D3402,D3403	CRITICAL	ONSEMI_DS

Soft-Term Cap Sub BOMs

PART#	QTY	DESCRIPTION	REFERENCE DESIGNATOR(S)	CRITICAL	BOM OPTION
685-00159	1	SUBBOM,MLB,BOT,CAP,TYPICAL,X893	SUBBOM_CAP	CRITICAL	COMMON

Touch/Luna B2B

PART#	QTY	DESCRIPTION	REFERENCE DESIGNATOR(S)	CRITICAL	BOM OPTION
138S00159	1	CAP,SOFT-TERM,2.2UF,6.3V,0201,KYOCERA	C5890	CRITICAL	SOFT_CAP
138S0831	1	CAP,TYPICAL,2.2UF,6.3V,0201,MURATA	C5890	CRITICAL	TYPICAL_CAP

PART NUMBER	ALTERNATE FOR PART NUMBER	BOM OPTION	REF DES	COMMENTS:
685-00160	685-00159	BOM_TABLE_ALTS	SUBBOM_CAP	SUBBOM,MLB,BOT,CAP,SOFT,X893

SYNC_MASTER= SYNC_DATE=03/08/2017

PAGE TITLE

SYSTEM:BOM Tables

Apple Inc.

DRAWING NUMBER 051-02247 SIZE D

REVISION 7.0.0

BRANCH evt-1

PAGE 2 OF 80

SHEET 2 OF 34

NOTICE OF PROPRIETARY PROPERTY:

THE INFORMATION CONTAINED HEREIN IS THE PROPRIETARY PROPERTY OF APPLE INC.
THE POSESSOR AGREES TO THE FOLLOWING:

I TO MAINTAIN THIS DOCUMENT IN CONFIDENCE

II NOT TO REPRODUCE OR COPY IT

III NOT TO REVEAL OR PUBLISH IT IN WHOLE OR PART

IV ALL RIGHTS RESERVED

PDF Watermark Remover DEMO : Purchase from www.PDFWatermarkRemover.com to remove the watermark

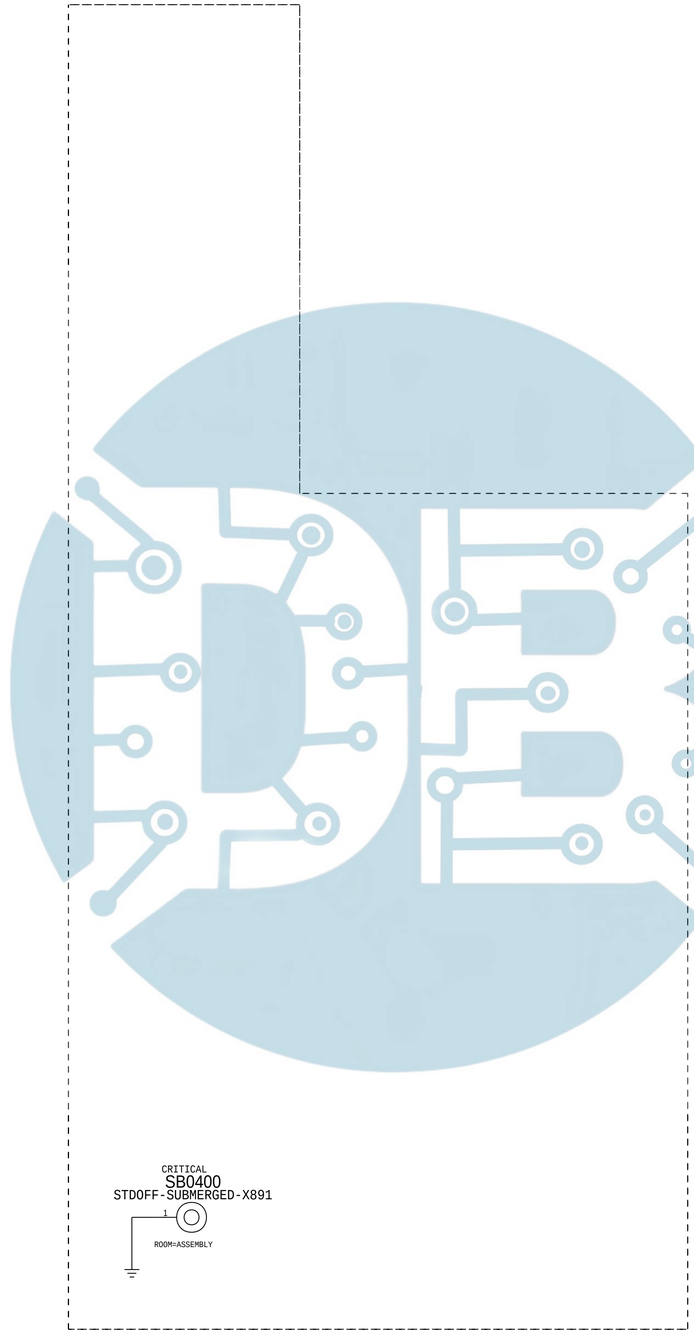

FIDUCIALS

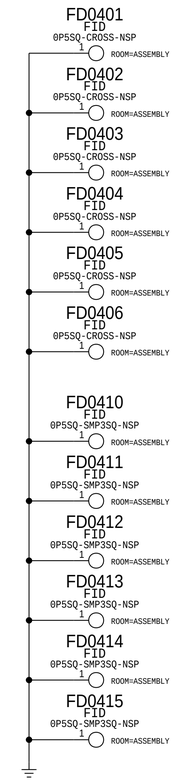

SYNC_DATE=12/01/2016

PAGE TITLE

SYSTEM: Mechanical Components

Apple Inc.

DRAWING NUMBER	051-02247
SIZE	D
REVISION	7.0.0
BRANCH	evt-1
PAGE	4 OF 80
SHEET	3 OF 34

NOTICE OF PROPRIETARY PROPERTY:

THE INFORMATION CONTAINED HEREIN IS THE PROPRIETARY PROPERTY OF APPLE INC.
THE POSESSOR AGREES TO THE FOLLOWING:
I TO MAINTAIN THIS DOCUMENT IN CONFIDENCE
II NOT TO REPRODUCE OR COPY IT
III NOT TO REVEAL OR PUBLISH IT IN WHOLE OR PART
IV ALL RIGHTS RESERVED

PDF Watermark Remover DEMO : Purchase from www.PDFWatermarkRemover.com to remove the watermark

BOOTSTRAPPING:BOARD ID[3]

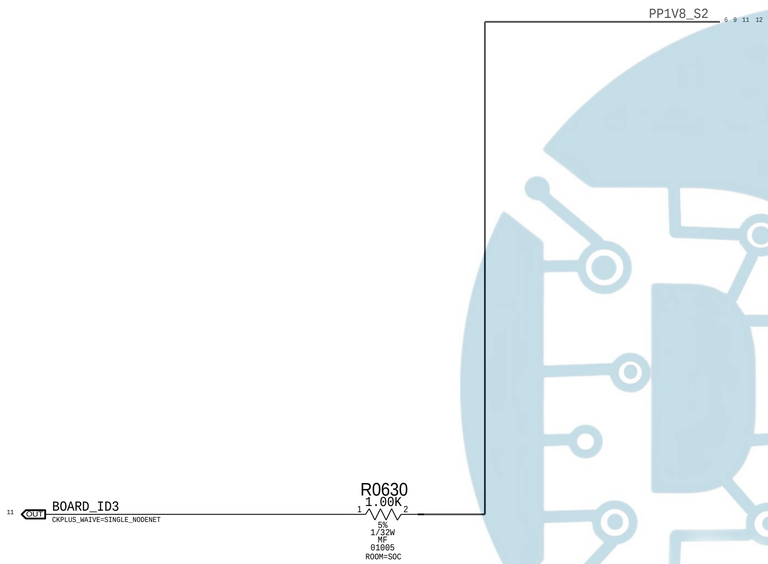

D221 Selected (BOARD_ID3) ->

SYNC_DATE=11/03/2016

PAGE TITLE

BOOTSTRAPPING

Apple Inc.

DRAWING NUMBER	051-02247
SIZE	D
REVISION	7.0.0
BRANCH	evt-1
PAGE	6 OF 80
SHEET	4 OF 34

NOTICE OF PROPRIETARY PROPERTY:

THE INFORMATION CONTAINED HEREIN IS THE PROPRIETARY PROPERTY OF APPLE INC.
THE POSESSOR AGREES TO THE FOLLOWING:

I TO MAINTAIN THIS DOCUMENT IN CONFIDENCE

II NOT TO REPRODUCE OR COPY IT

III NOT TO REVEAL OR PUBLISH IT IN WHOLE OR PART

IV ALL RIGHTS RESERVED

PDF Watermark Remover DEMO : Purchase from www.PDFWatermarkRemover.com to remove the watermark

Test Points

Net	Point	Note
PP_VDD_MAIN	TP0700	VDD_MAIN
	TP0701	
	TP0702	
	TP0703	
PP_BATT_VCC	TP0515	VBATT
	TP0522	
	TP0705	
	TP0706	
	TP0707	
	TP0708	
	TP0709	
	TP0710	

AMUX

Net	Point	Note
PMU_AMUX_AY	TP0713	ANALOG MUX A OUTPUT
PMU_AMUX_BY	TP0715	ANALOG MUX B OUTPUT

DFU

Net	Point	Note
PMU_HYDRA_TO_AP_FORCE_DFU	TP0714	FORCE DFU

LVCC

Net	Point
PP_GPU_LVCC	TP0720
PP_CPU_PCORE_LVCC	TP0721

COIL

Net	Point
IKTARA_COIL1	TP0730
IKTARA_COIL2	TP0731

Net	Point
GND	TP0750
PP5V25_TOUCH_VDDH	TP0751
PP3V5_RACER	TP0752
PN6V7_RACER	TP0753
PP10V0_RACER	TP0754
PP1V1_RACER	TP0755
TOUCH_TO_ACORN_PP5V25_EN	TP0756
TOUCH_TO_AMUX_PP1V8	TP0757
PMU_TO_TOUCH_CLK32K_RESET_L	TP0758
AP_TO_MANY_BSYNC	TP0759
HALL2_TO_AOP_IRQ_L	TP0760
AP_TO_RACER_RESET_L	TP0761
UART_RACER_TO_AOP_RXD	TP0762
RACER_TO_AOP_INT_L	TP0763
UART_AOP_TO_RACER_TXD	TP0764
RACER_TO_ACORN_ORB_SCAN	TP0766
SPI_AP_TO_RACER_CS_L	TP0767
SPI_AP_TO_RACER_MOSI	TP0768
I2C3_AP_SDA	TP0771
I2C3_AP_SCL	TP0772

Net	Point	Note
PP1V8_TOUCH_RACER_S2	TP0780	
GND	TP0790	Stockholm GND TP

Probe Points

Iktara Debug

Net	Point
PMU_TO_IKTARA_EN_EXT_1P8V	PP0700
IKTARA_ANA1	PP0701
IKTARA_GPIO3	PP0702
IKTARA_GPIO4	PP0703
IKTARA_TO_SMC_INT	PP0704

SYNC_MASTER=test_mlb SYNC_DATE=01/17/2017

PAGE TITLE
SYSTEM: Testpoints (Bottom)

Apple Inc.

DRAWING NUMBER 051-02247 SIZE D
REVISION 7.0.0
BRANCH evt-1
PAGE 7 OF 80
SHEET 5 OF 34

NOTICE OF PROPRIETARY PROPERTY:
THE INFORMATION CONTAINED HEREIN IS THE PROPRIETARY PROPERTY OF APPLE INC.
THE POSESSOR AGREES TO THE FOLLOWING:
I TO MAINTAIN THIS DOCUMENT IN CONFIDENCE
II NOT TO REPRODUCE OR COPY IT
III NOT TO REVEAL OR PUBLISH IT IN WHOLE OR PART
IV ALL RIGHTS RESERVED

PDF Watermark Remover DEMO : Purchase from www.PDFWatermarkRemover.com to remove the watermark

Iktara

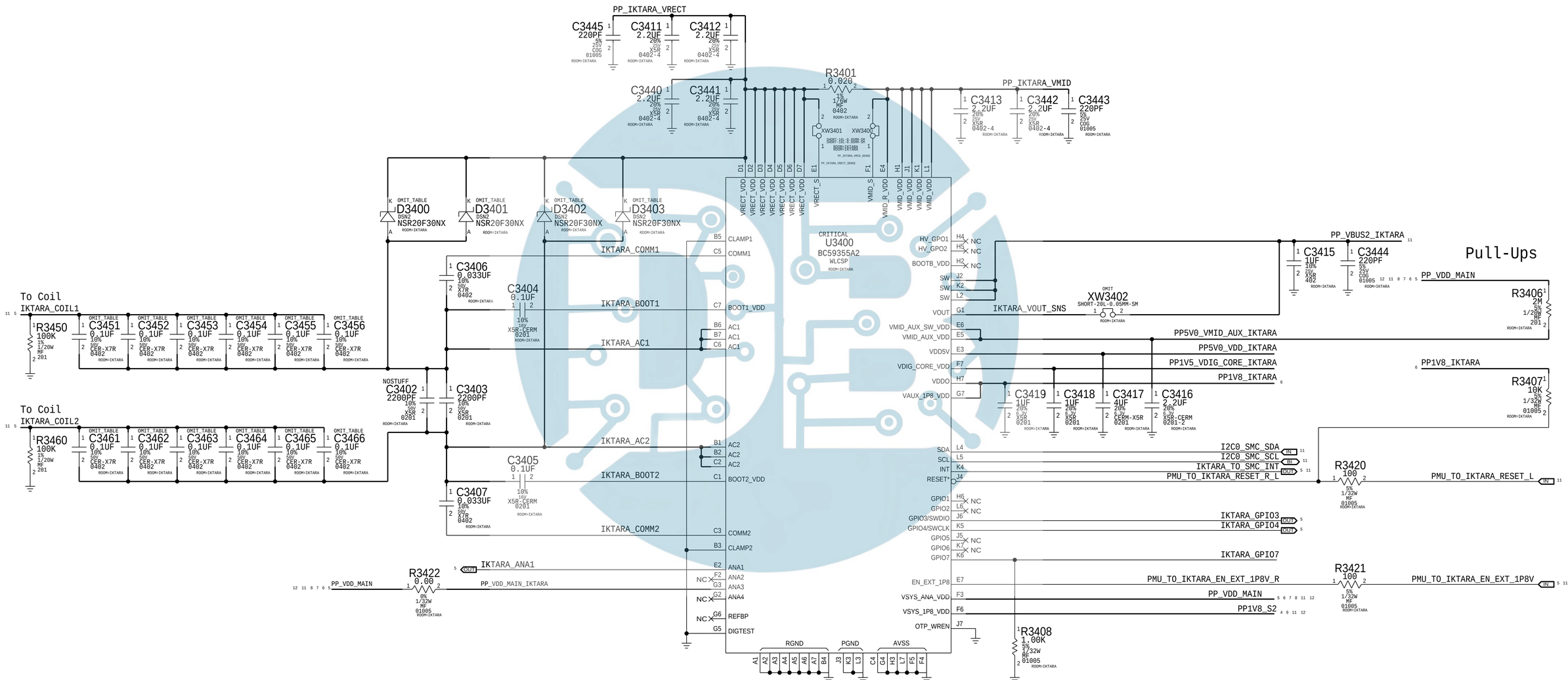

PAGE TITLE

SYSTEM POWER: Iktara

Apple Inc.

DRAWING NUMBER	051-02247
SIZE	D
REVISION	7.0.0
BRANCH	evt-1
PAGE	34 OF 80
SHEET	6 OF 34

NOTICE OF PROPRIETARY PROPERTY:

THE INFORMATION CONTAINED HEREIN IS THE PROPRIETARY PROPERTY OF APPLE INC.
THE POSESSOR AGREES TO THE FOLLOWING:
I TO MAINTAIN THIS DOCUMENT IN CONFIDENCE
II NOT TO REPRODUCE OR COPY IT
III NOT TO REVEAL OR PUBLISH IT IN WHOLE OR PART
IV ALL RIGHTS RESERVED

PDF Watermark Remover DEMO : Purchase from www.PDFWatermarkRemover.com to remove the watermark

South Speaker Amplifier

APN: 338S00295

I2C ADDRESS: 1000 000x
0x80

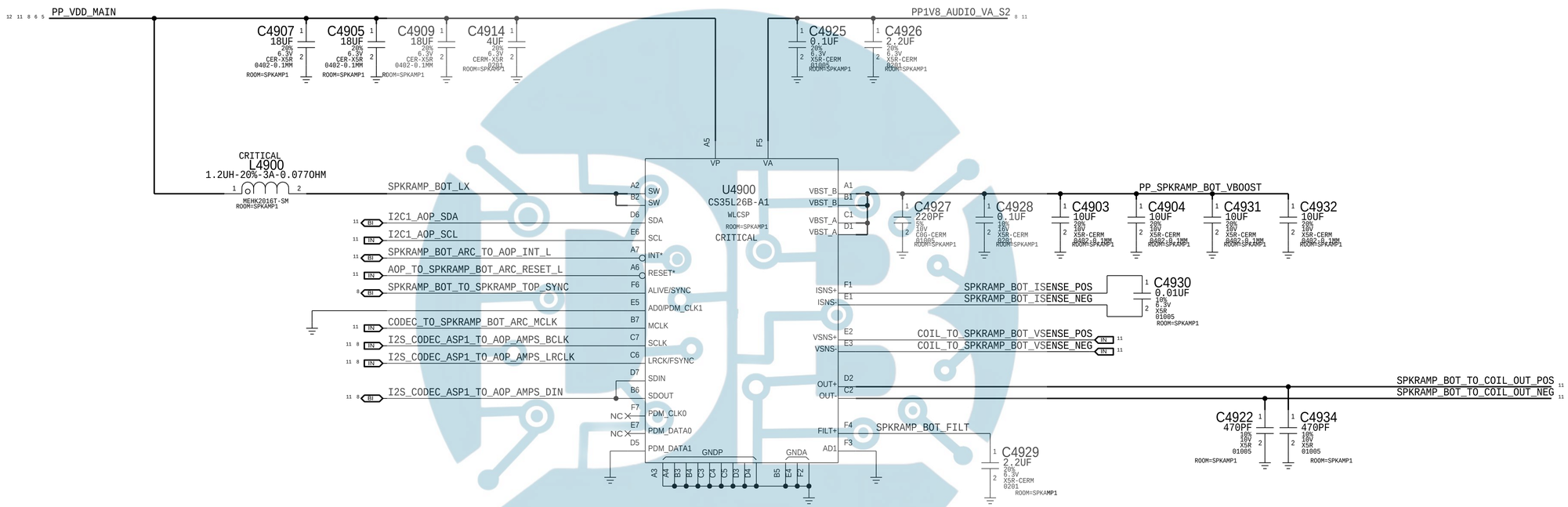

PAGE TITLE	AUDIO: Speaker Amp Bottom
Apple Inc.	DRAWING NUMBER 051-02247 SIZE D
	REVISION 7.0.0
	BRANCH evt-1
	PAGE 49 OF 80
	SHEET 7 OF 34

NOTICE OF PROPRIETARY PROPERTY:
THE INFORMATION CONTAINED HEREIN IS THE PROPRIETARY PROPERTY OF APPLE INC.
THE POSESSOR AGREES TO THE FOLLOWING:
I TO MAINTAIN THIS DOCUMENT IN CONFIDENCE
II NOT TO REPRODUCE OR COPY IT
III NOT TO REVEAL OR PUBLISH IT IN WHOLE OR PART
IV ALL RIGHTS RESERVED

PDF Watermark Remover DEMO : Purchase from www.PDFWatermarkRemover.com to remove the watermark

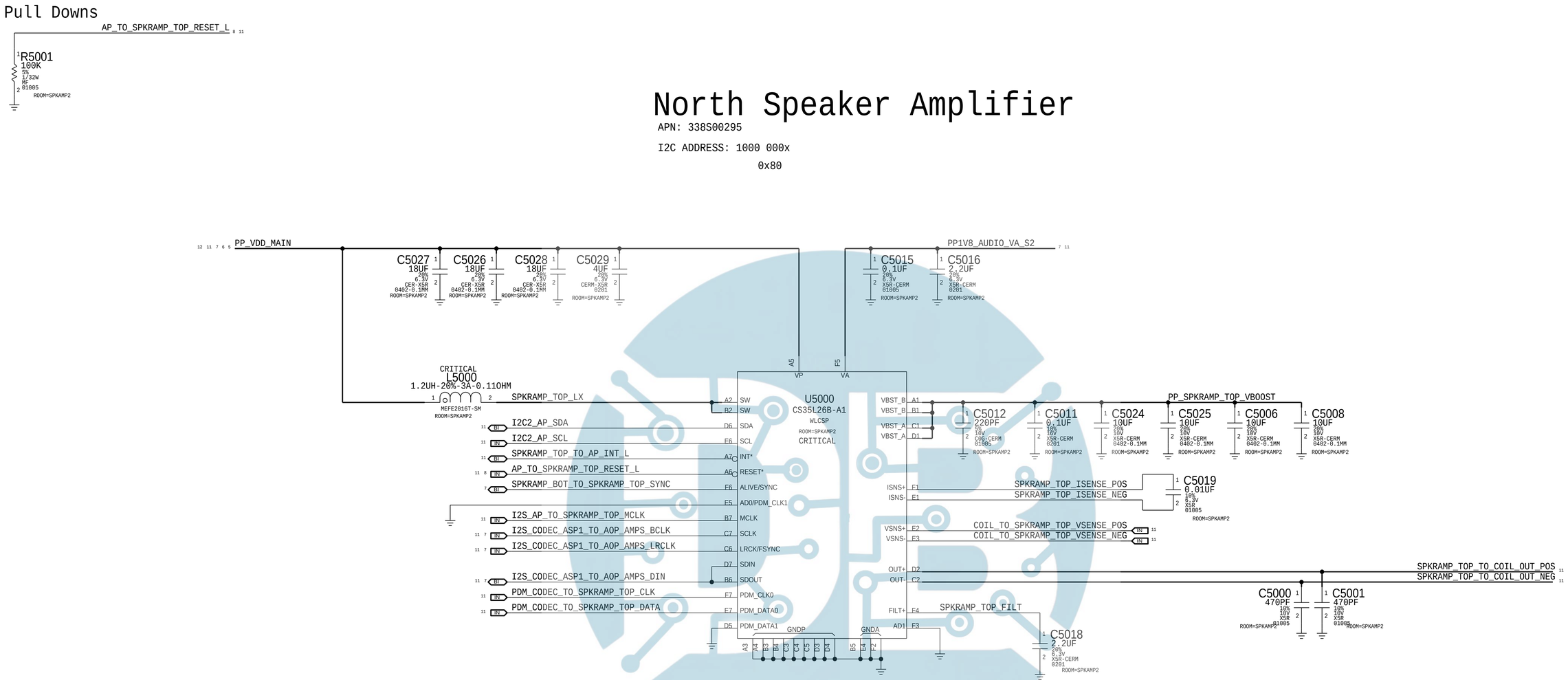

PAGE TITLE

AUDIO: Speaker Amp Top

Apple Inc.

DRAWING NUMBER 051-02247 SIZE D

REVISION 7.0.0

BRANCH evt-1

PAGE 50 OF 80

SHEET 8 OF 34

NOTICE OF PROPRIETARY PROPERTY:

THE INFORMATION CONTAINED HEREIN IS THE PROPRIETARY PROPERTY OF APPLE INC.
THE POSESSOR AGREES TO THE FOLLOWING:

I TO MAINTAIN THIS DOCUMENT IN CONFIDENCE

II NOT TO REPRODUCE OR COPY IT

III NOT TO REVEAL OR PUBLISH IT IN WHOLE OR PART

IV ALL RIGHTS RESERVED

PDF Watermark Remover DEMO : Purchase from www.PDFWatermarkRemover.com to remove the watermark

Hall Effect

APN:353S3697

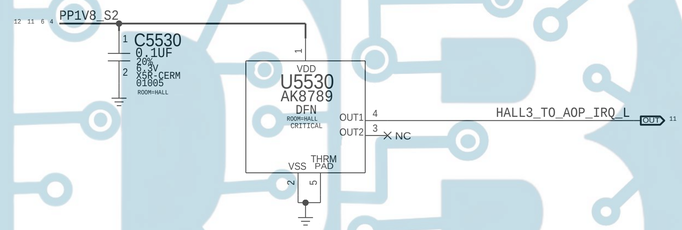

PAGE TITLE	HALL EFFECT
Apple Inc.	DRAWING NUMBER 051-02247 SIZE D
	REVISION 7.0.0
	BRANCH evt-1
	PAGE 55 OF 80
	SHEET 9 OF 34

NOTICE OF PROPRIETARY PROPERTY:
THE INFORMATION CONTAINED HEREIN IS THE PROPRIETARY PROPERTY OF APPLE INC.
THE POSESSOR AGREES TO THE FOLLOWING:
I TO MAINTAIN THIS DOCUMENT IN CONFIDENCE
II NOT TO REPRODUCE OR COPY IT
III NOT TO REVEAL OR PUBLISH IT IN WHOLE OR PART
IV ALL RIGHTS RESERVED

PDF Watermark Remover DEMO : Purchase from www.PDFWatermarkRemover.com to remove the watermark

Racer I/O

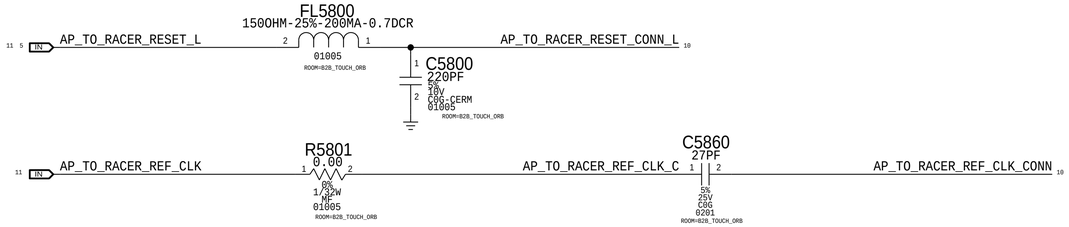

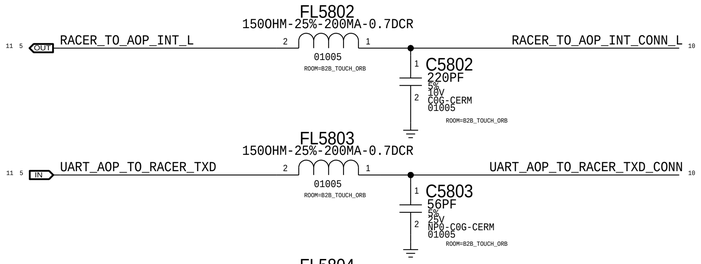

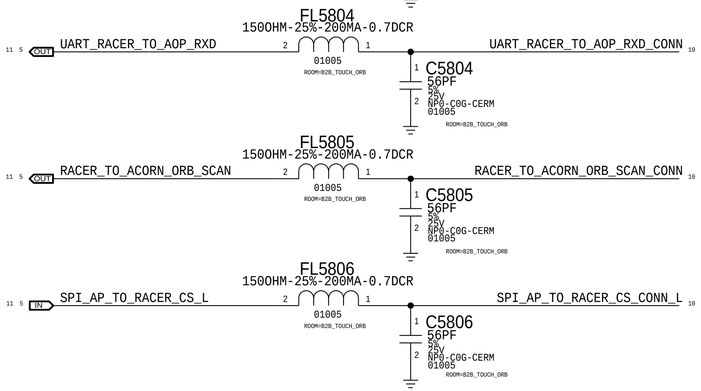

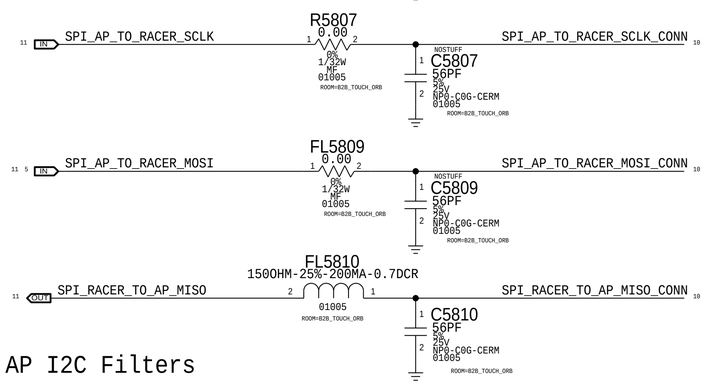

AP I2C Filters

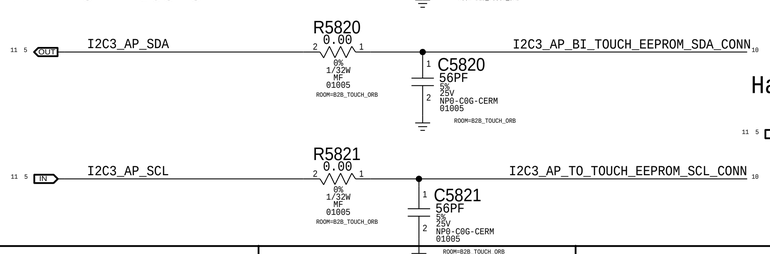

Touch and Misc I/O

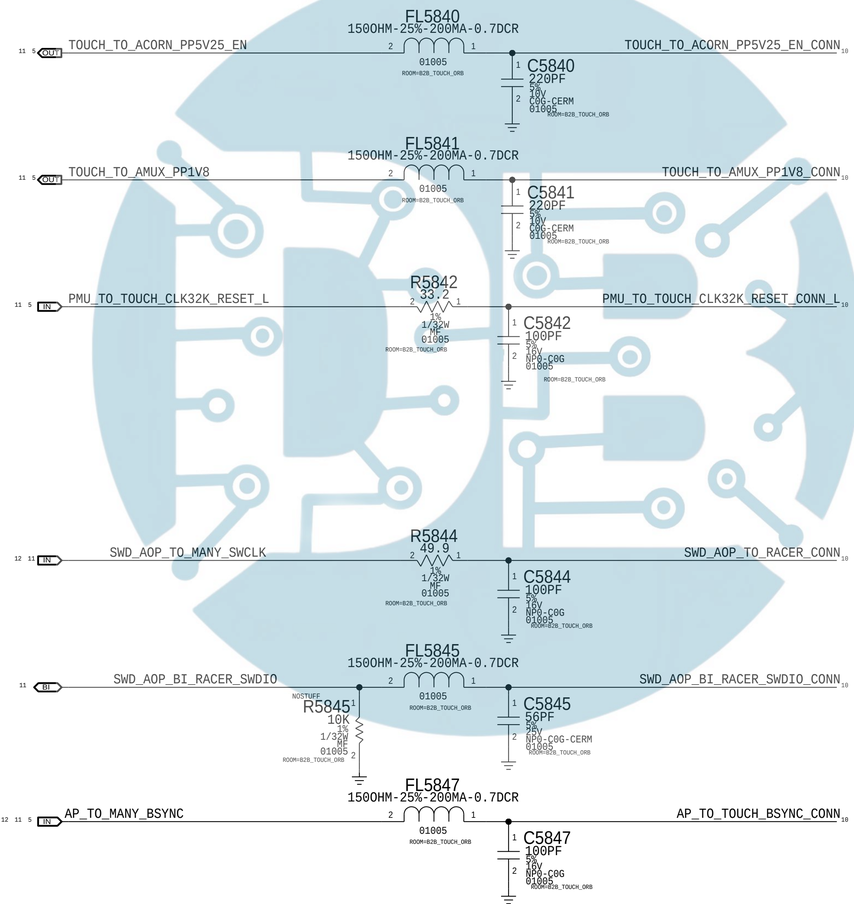

Hall Effect

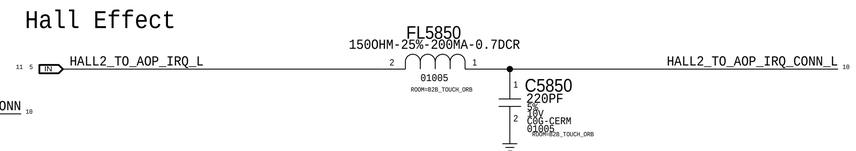

Luna + Touch Connector

Rcpt: 516S00325 <-- This one on MLB
Plug: 516S00326

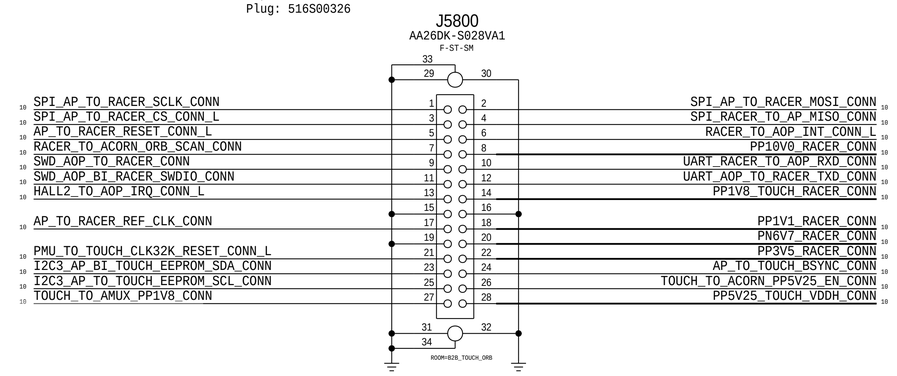

Touch And Racer Power

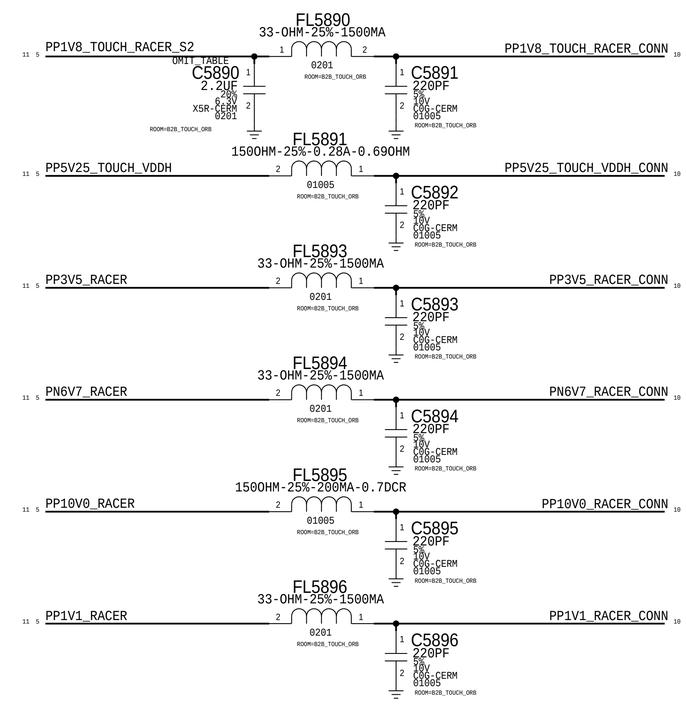

PAGE TITLE
CG: B2B Luna & Touch

Apple Inc.

DRAWING NUMBER 051-02247 SIZE D
REVISION 7.0.0
BRANCH evt-1
PAGE 58 OF 80
SHEET 10 OF 34

NOTICE OF PROPRIETARY PROPERTY:
THE INFORMATION CONTAINED HEREIN IS THE PROPRIETARY PROPERTY OF APPLE INC.
THE POSESSOR AGREES TO THE FOLLOWING:
I TO MAINTAIN THIS DOCUMENT IN CONFIDENCE
II NOT TO REPRODUCE OR COPY IT
III NOT TO REVEAL OR PUBLISH IT IN WHOLE OR PART
IV ALL RIGHTS RESERVED

PDF Watermark Remover DEMO : Purchase from www.PDFWatermarkRemover.com to remove the watermark

J_INT_TOP
INTERPOSER-TOP-D22
SMT-PAD
SYM 3 OF 3

SIGNAL

Pin	Net	Pin	Net
S1	12 UART_AP_TO_GNSS_TXD	S87	PP1V8_S2 4 6 9 11 12
S2	12 UART_AP_TO_GNSS_RTS_L	S88	
S3	12 UART_GNSS_TO_AP_CTS_L	S89	PP_VDD_MAIN 5 6 7 8 11 12
S4	12 UART_GNSS_TO_AP_RXD	S90	BB_TO_PMU_PCIE_HOST_WAKE_L 12
S5	12 AP_TO_GNSS_WAKE	S91	PMU_TO_BBPMU_RESET_L 12
S6	12 PMU_TO_GNSS_EN	S92	PMU_AMUX_AY 5
S7	12 AP_TO_BB_TIME_MARK	S93	AOP_TO_WLAN_CONTEXT_B 12
S8	12 90_PCIE_AP_TO_BB_REFCLK_N	S94	UART_BB_TO_AOP_RXD 12
S9		S95	UART_AOP_TO_BB_TXD 12
S10	12 90_PCIE_AP_TO_BB_REFCLK_P	S96	AOP_TO_WLAN_CONTEXT_A 12
S11	12 90_PCIE_BB_TO_AP_RXD_P	S97	BT_TO_PMU_HOST_WAKE 12
S12	12 90_PCIE_BB_TO_AP_RXD_N	S98	PMU_TO_BT_REG_ON 12
S13	12 90_PCIE_AP_TO_BB_TXD_P	S99	PMU_TO_WLAN_CLK32K 12
S14		S100	WLAN_TO_PMU_HOST_WAKE 12
S15	12 90_PCIE_AP_TO_BB_TXD_N	S101	PMU_TO_WLAN_REG_ON 12
S16	12 90_PCIE_WLAN_TO_AP_RXD_P	S102	PMU_AMUX_BY 5
S17		S103	CODEC_TO_SPKRAMP_BOT_ARC_MCLK 7
S18	12 90_PCIE_WLAN_TO_AP_RXD_N	S104	PMU_TO_BB_USB_VBUS_DETECT 12
S19	12 90_PCIE_AP_TO_WLAN_REFCLK_N	S105	PMU_HYDRA_TO_AP_FORCE_DFU 5
S20		S106	AP_TO_BT_WAKE 12
S21	12 90_PCIE_AP_TO_WLAN_REFCLK_P	S107	WLAN_TO_AP_TIME_SYNC 12
S22	12 90_PCIE_AP_TO_WLAN_TXD_N	S108	RADIO_PA_NTC 12
S23		S109	AP_TO_MANY_BSYNC 5 10 12
S24	12 90_PCIE_AP_TO_WLAN_TXD_P	S110	TOUCH_TO_AMUX_PP1V8 5 10
S25		S111	PP3V5_RACER 5 10
S26		S112	PP1V1_RACER 5 10
S27	6 5 PMU_TO_IKTARA_EN_EXT_1P8V	S113	
S28	6 5 IKTARA_TO_SMC_INT	S114	PP5V25_TOUCH_VDDH 5 10
S29	6 I2C0_SMC_SCL	S115	RACER_TO_ACORN_ORB_SCAN 5 10
S30	6 I2C0_SMC_SDA	S116	PP1V8_TOUCH_RACER_S2 5 10
S31	12 BB_TO_STROBE_DRIVER_GSM_BURST_IND	S117	I2C3_AP_SCL 5 10
S32	NC	S118	I2C3_AP_SDA 5 10
S33	8 PDM_CODEC_TO_SPKRAMP_TOP_CLK	S119	TOUCH_TO_ACORN_PP5V25_EN 5 10
S34	8 PDM_CODEC_TO_SPKRAMP_TOP_DATA	S120	PN6V7_RACER 5 10
S35	12 PCIE_AP_TO_BB_RESET_L	S121	PMU_TO_TOUCH_CLK32K_RESET_L 5 10
S36	8 I2S_AP_TO_SPKRAMP_TOP_MCLK	S122	PP10V0_RACER 5 10
S37	8 AP_TO_SPKRAMP_TOP_RESET_L	S123	AP_TO_RACER_RESET_L 5 10
S38	8 SPKRAMP_TOP_TO_AP_INT_L	S124	RACER_TO_AOP_INT_L 5 10
S39	8 I2C2_AP_SDA	S125	SWD_AOP_TO_MANY_SWCLK 10 12
S40	8 I2C2_AP_SCL	S126	SWD_AOP_BI_RACER_SWDIO 10
S41	8 7 PP1V8_AUDIO_VA_S2	S127	UART_AOP_TO_RACER_TXD 5 10
S42	5 PP_GPU_LVCC	S128	UART_RACER_TO_AOP_RXD 5 10
S43	5 PP_CPU_PCORE_LVCC	S129	HALL2_TO_AOP_IRQ_L 5 10
S44	12 AP_TO_BB_IPC_GPIO1	S130	AP_TO_RACER_REF_CLK 10
S45	12 AP_TO_BB_RESET_L	S131	SPI_AP_TO_RACER_CS_L 5 10
S46	9 HALL3_TO_AOP_IRQ_L	S132	SPI_RACER_TO_AP_MISO 10
S47	NC	S133	SPI_AP_TO_RACER_MOSI 5 10
S48	4 BOARD_ID3	S134	SPI_AP_TO_RACER_SCLK 10
S49	12 PCIE_WLAN_BI_AP_CLKREQ_L	S135	PP_BATT_VCC 5
S50	12 PCIE_AP_TO_WLAN_RESET_L	S136	
S51	8 7 I2S_CODEC_ASP1_TO_AOP_AMPS_BCLK	S137	PP3V0_S2 12
S52	8 7 I2S_CODEC_ASP1_TO_AOP_AMPS_DIN	S138	
S53	8 7 I2S_CODEC_ASP1_TO_AOP_AMPS_LRCLK	S139	90_USB_BB_DATA_P 12
S54	6 PMU_TO_IKTARA_RESET_L	S140	90_USB_BB_DATA_N 12
S55	12 I2S_BB_TO_AP_DIN	S141	
S56	12 I2S_BB_TO_AP_LRCLK	S142	PP_VBUS2_IKTARA 6
S57	12 I2S_BB_TO_AP_BCLK	S143	
S58	12 I2S_AP_TO_BB_DOUT	S144	
S59	12 BB_TO_AP_RESET_DETECT_L	S145	
S60	12 AP_TO_BBPMU_RADIO_ON_L	S146	IKTARA_COIL2 5 6
S61	12 AP_TO_WLAN_DEVICE_WAKE	S147	
S62	7 SPKRAMP_BOT_ARC_TO_AOP_INT_L	S148	
S63	7 AOP_TO_SPKRAMP_BOT_ARC_RESET_L	S149	
S64	NC	S150	IKTARA_COIL1 5 6
S65	12 SWD_AOP_BI_BB_SWDIO	S151	
S66	7 I2C1_AOP_SDA	S152	
S67	7 I2C1_AOP_SCL	S153	
S68	12 11 8 7 6 5 PP_VDD_MAIN	S154	AP_TO_BB_COREDUMP 12
S69		S155	PCIE_BB_BI_AP_CLKREQ_L 12
S70		S156	SPKRAMP_TOP_TO_COIL_OUT_POS 8
S71		S157	SPKRAMP_TOP_TO_COIL_OUT_NEG 8
S72		S158	COIL_TO_SPKRAMP_TOP_VSENSE_POS 8
S73		S159	COIL_TO_SPKRAMP_TOP_VSENSE_NEG 8
S74		S160	COIL_TO_SPKRAMP_BOT_VSENSE_POS 7
S75		S161	COIL_TO_SPKRAMP_BOT_VSENSE_NEG 7
S76		S162	SPKRAMP_BOT_TO_COIL_OUT_POS 7
S77	12 UART_AP_TO_BT_RTS_L	S163	SPKRAMP_BOT_TO_COIL_OUT_NEG 7
S78	12 UART_BT_TO_AP_CTS_L	S164	AP_TO_NFC_DEV_WAKE 12
S79	12 UART_AP_TO_BT_TXD	S165	UART_NFC_TO_AP_CTS_L 12
S80	12 UART_BT_TO_AP_RXD	S166	UART_AP_TO_NFC_TXD 12
S81	12 NC_PP_VDD_BOOST	S167	UART_NFC_TO_AP_RXD 12
S82	12 UART_AP_TO_WLAN_TXD	S168	UART_AP_TO_NFC_RTS_L 12
S83	12 UART_AP_TO_WLAN_RTS_L	S169	AP_TO_NFC_FW_DWLD_REQ 12
S84	12 UART_WLAN_TO_AP_RXD	S170	NFC_TO_PMU_HOST_WAKE 12
S85	12 UART_WLAN_TO_AP_CTS_L	S171	PMU_TO_NFC_EN 12
S86	12 11 9 6 4 PP1V8_S2	S172	NC

J_INT_TOP
INTERPOSER-TOP-D22
SMT-PAD
SYM 1 OF 3

GND

Pin	Pin	Pin	Pin
G1	IOG1	IOG63	G63
G2	IOG2	IOG64	G64
G3	IOG3	IOG65	G65
G4	IOG4	IOG66	G66
G5	IOG5	IOG67	G67
G6	IOG6	IOG68	G68
G7	IOG7	IOG69	G69
G8	IOG8	IOG70	G70
G9	IOG9	IOG71	G71
G10	IOG10	IOG72	G72
G11	IOG11	IOG73	G73
G12	IOG12	IOG74	G74
G13	IOG13	IOG75	G75
G14	IOG14	IOG76	G76
G15	IOG15	IOG77	G77
G16	IOG16	IOG78	G78
G17	IOG17	IOG79	G79
G18	IOG18	IOG80	G80
G19	IOG19	IOG81	G81
G20	IOG20	IOG82	G82
G21	IOG21	IOG83	G83
G22	IOG22	IOG84	G84
G23	IOG23	IOG85	G85
G24	IOG24	IOG86	G86
G25	IOG25	IOG87	G87
G26	IOG26	IOG88	G88
G27	IOG27	IOG89	G89
G28	IOG28	IOG90	G90
G29	IOG29	IOG91	G91
G30	IOG30	IOG92	G92
G31	IOG31	IOG93	G93
G32	IOG32	IOG94	G94
G33	IOG33	IOG95	G95
G34	IOG34	IOG96	G96
G35	IOG35	IOG97	G97
G36	IOG36	IOG98	G98
G37	IOG37	IOG99	G99
G38	IOG38	IOG100	G100
G39	IOG39	IOG101	G101
G40	IOG40	IOG102	G102
G41	IOG41	IOG103	G103
G42	IOG42	IOG104	G104
G43	IOG43	IOG105	G105
G44	IOG44	IOG106	G106
G45	IOG45	IOG107	G107
G46	IOG46	IOG108	G108
G47	IOG47	IOG109	G109
G48	IOG48	IOG110	G110
G49	IOG49	IOG111	G111
G50	IOG50	IOG112	G112
G51	IOG51	IOG113	G113
G52	IOG52	IOG114	G114
G53	IOG53	IOG115	G115
G54	IOG54	IOG116	G116
G55	IOG55	IOG117	G117
G56	IOG56	IOG118	G118
G57	IOG57	IOG119	G119
G58	IOG58	IOG120	G120
G59	IOG59	IOG121	G121
G60	IOG60	IOG122	G122
G61	IOG61	IOG123	G123
G62	IOG62	IOG124	G124

J_INT_TOP
INTERPOSER-TOP-D22
SMT-PAD
SYM 2 OF 3

GND

Pin	Pin	Pin	Pin
G125	IOG125	IOG187	G187
G126	IOG126	IOG188	G188
G127	IOG127	IOG189	G189
G128	IOG128	IOG190	G190
G129	IOG129	IOG191	G191
G130	IOG130	IOG192	G192
G131	IOG131	IOG193	G193
G132	IOG132	IOG194	G194
G133	IOG133	IOG195	G195
G134	IOG134	IOG196	G196
G135	IOG135	IOG197	G197
G136	IOG136	IOG198	G198
G137	IOG137	IOG199	G199
G138	IOG138	IOG200	G200
G139	IOG139	IOG201	G201
G140	IOG140	IOG202	G202
G141	IOG141	IOG203	G203
G142	IOG142	IOG204	G204
G143	IOG143	IOG205	G205
G144	IOG144	IOG206	G206
G145	IOG145	IOG207	G207
G146	IOG146	IOG208	G208
G147	IOG147	IOG209	G209
G148	IOG148	IOG210	G210
G149	IOG149	IOG211	G211
G150	IOG150	IOG212	G212
G151	IOG151	IOG213	G213
G152	IOG152	IOG214	G214
G153	IOG153	IOG215	G215
G154	IOG154	IOG216	G216
G155	IOG155	IOG217	G217
G156	IOG156	IOG218	G218
G157	IOG157	IOG219	G219
G158	IOG158	IOG220	G220
G159	IOG159	IOG221	G221
G160	IOG160	IOG222	G222
G161	IOG161	IOG223	G223
G162	IOG162	IOG224	G224
G163	IOG163	IOG225	G225
G164	IOG164	IOG226	G226
G165	IOG165	IOG227	G227
G166	IOG166	IOG228	G228
G167	IOG167	IOG229	G229
G168	IOG168	IOG230	G230
G169	IOG169	IOG231	G231
G170	IOG170	IOG232	G232
G171	IOG171	IOG233	G233
G172	IOG172	IOG234	G234
G173	IOG173	IOG235	G235
G174	IOG174	IOG236	G236
G175	IOG175	IOG237	G237
G176	IOG176	IOG238	G238
G177	IOG177	IOG239	G239
G178	IOG178	IOG240	G240
G179	IOG179	IOG241	G241
G180	IOG180	IOG242	G242
G181	IOG181	IOG243	G243
G182	IOG182	IOG244	G244
G183	IOG183	IOG245	G245
G184	IOG184	IOG246	G246
G185	IOG185	IOG247	G247
G186	IOG186	IOG248	G248

SYNC_MASTER=mlb_bot SYNC_DATE=04/04/2017

PAGE TITLE
I/O: Interposer (Top)

Apple Inc.

DRAWING NUMBER 051-02247 SIZE D
REVISION 7.0.0
BRANCH evt-1
PAGE 66 OF 80
SHEET 11 OF 34

NOTICE OF PROPRIETARY PROPERTY:
THE INFORMATION CONTAINED HEREIN IS THE PROPRIETARY PROPERTY OF APPLE INC.
THE POSESSOR AGREES TO THE FOLLOWING:
I TO MAINTAIN THIS DOCUMENT IN CONFIDENCE
II NOT TO REPRODUCE OR COPY IT
III NOT TO REVEAL OR PUBLISH IT IN WHOLE OR PART
IV ALL RIGHTS RESERVED

PDF Watermark Remover DEMO : Purchase from www.PDFWatermarkRemover.com to remove the watermark

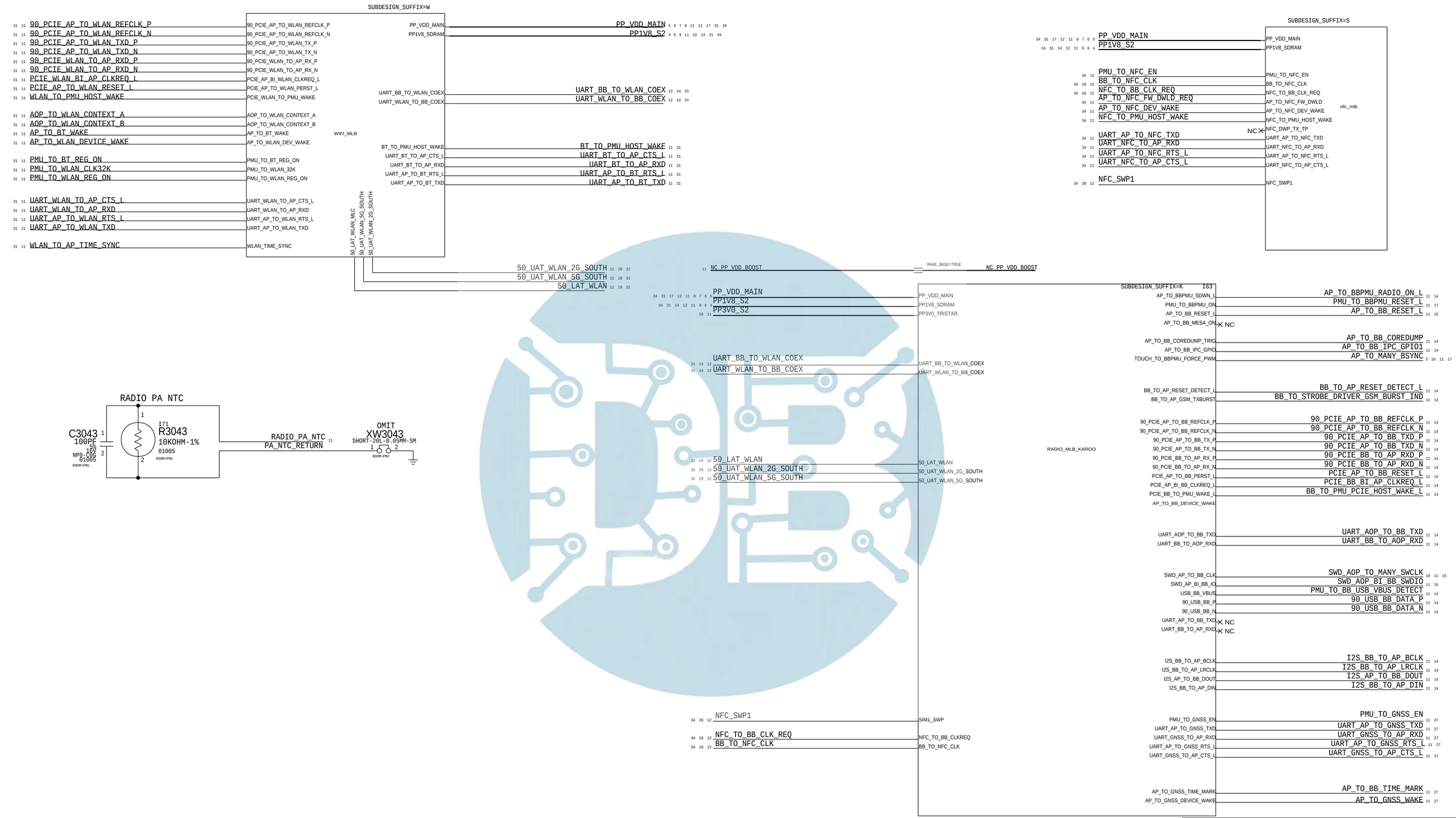

SYNC_DATE=07/29/2016

PAGE TITLE: RADIOS

Apple Inc.

DRAWING NUMBER: 051-02247 SIZE: D

REVISION: 7.0.0

BRANCH: evt-1

PAGE: 80 OF 80

SHEET: 12 OF 34

NOTICE OF PROPRIETARY PROPERTY:
THE INFORMATION CONTAINED HEREIN IS THE PROPRIETARY PROPERTY OF APPLE INC.
THE POSESSOR AGREES TO THE FOLLOWING:
I TO MAINTAIN THIS DOCUMENT IN CONFIDENCE
II NOT TO REPRODUCE OR COPY IT
III NOT TO REVEAL OR PUBLISH IT IN WHOLE OR PART
IV ALL RIGHTS RESERVED

PDF Watermark Remover DEMO : Purchase from www.PDFWatermarkRemover.com to remove the watermark

1. ALL RESISTANCE VALUES ARE IN OHMS, 0.1 WATT +/- 5%.
2. ALL CAPACITANCE VALUES ARE IN MICROFARADS.
3. ALL CRYSTALS & OSCILLATOR VALUES ARE IN HERTZ.

REV	ECN	DESCRIPTION OF REVISION	CK APPD / DATE
7	0008448938	ENGINEERING RELEASED	2017-04-11

ICE17.2 RADIO_MLB

Tue Apr 11 16:10:08 2017

PDF PAGE	CSA PAGE	CONTENTS
2	2	BASEBAND
3	3	BASEBAND MEMORY/DEBUG
4	4	BASEBAND POWER
5	5	BASEBAND PMIC
6	6	TRANSCEIVERS
7	7	ET MODULATOR
8	8	TDD TRANSMIT
9	9	FDD TRANSMIT
10	10	PRIMARY RECEIVE
11	11	LOWER ANTENNA & COUPLERS
12	12	DIVERSITY RECEIVE ASM'S
13	13	DIVERSITY RECEIVE LNA'S
14	14	UPPER ANTENNA FEEDS
15	15	GNSS
16	16	TEST POINTS & SIM

ALTERNATES

PART NUMBER	ALTERNATE FOR PART NUMBER	REFERENCE DESIGNATOR(S)	DESCRIPTION	BOM OPTION
197S00040	197S00044	VTCXO_K	AVX VC-TCXO	?
197S00042	197S00044	VTCXO_K	NDK VC-TCXO	?
335S00013	335S0894	EPROM_K	ON SEMI EEPROM	?
138S0719	138S1103	C522_K	MURATA	?
138S00133	138S00128	C509_K, C523_K, C605_K, C624_K, C626_K, C1114_K, C1116_K	MURATA	?
138S00049	138S00032	C402_K, C433_K, C437_K, C510_K, C720_K	MURATA	?
138S0831	138S00032	C402_K, C433_K, C437_K, C510_K, C720_K	MURATA	?
138S00086	138S0884	C500_K, C501_K, C502_K, C514_K, C515_K	MURATA	?
339S00363	339S00353	GNSS_K	PILSNER STATS	?

BOM OPTIONS

PART#	QTY	DESCRIPTION	REFERENCE DESIGNATOR(S)	CRITICAL	BOM OPTION
998-05780	1	BASEBAND, UNFUSED	U_BB_K	CRITICAL	BB_UNFUSED
998-05781	1	BASEBAND, LOCAL FUSED	U_BB_K	CRITICAL	BB_LOCAL_FUSED
998-05782	1	BASEBAND, DEV FUSED	U_BB_K	CRITICAL	BB_DEV_FUSED
337S00244	1	BASEBAND, PRODUCTION FUSED	U_BB_K	CRITICAL	BB_PROD_FUSED
138S00159	7	CAP,SOFT-TERM,2.2UF,6.3V,0201,KYOCERA	C402_K,C437_K,C438_K,C433_K,C510_K,C720_K,C1001_K		SOFT_CAP
138S0831	7	CAP,TYPICAL,2.2UF,6.3V,0201,MURATA	C402_K,C437_K,C438_K,C433_K,C510_K,C720_K,C1001_K		TYPICAL_CAP

RADIO_MLB PORTS

POWER

- PP_VDD_MAIN
- PP1V8_S2
- PP3V0_S2

CLOCKS

PMU_TO_BB_GNSS_32K

BB CONTROL

- AP_TO_BBPMU_RADIO_ON_L
- PMU_TO_BBPMU_RESET_L
- AP_TO_BB_RESET_L
- BB_TO_AP_RESET_DETECT_L
- BB_TO_STROBE_DRIVER_GSM_BURST_IND
- AP_TO_BB_MESA_ON_K
- AP_TO_BB_COREDUMP
- AP_TO_MANY_BSYNC
- AP_TO_BB_IPC_GPIO1

PCIE

- 90_PCIE_AP_TO_BB_REFCLK_P
- 90_PCIE_AP_TO_BB_REFCLK_N
- 90_PCIE_AP_TO_BB_TXD_P
- 90_PCIE_AP_TO_BB_TXD_N
- 90_PCIE_BB_TO_AP_RXD_P
- 90_PCIE_BB_TO_AP_RXD_N
- PCIE_AP_TO_BB_RESET_L
- PCIE_BB_BI_AP_CLKREQ_L
- BB_TO_PMU_PCIE_HOST_WAKE_L
- AP_TO_BB_DEVICE_WAKE

UART

- UART_AP_TO_BB_TXD_K
- UART_BB_TO_AP_RXD_K

AOP

- UART_AOP_TO_BB_TXD
- UART_BB_TO_AOP_RXD

AUDIO

- I2S_BB_TO_AP_BCLK
- I2S_BB_TO_AP_LRCLK
- I2S_AP_TO_BB_DOUT
- I2S_BB_TO_AP_DIN

WLAN

- UART_BB_TO_WLAN_COEX
- UART_WLAN_TO_BB_COEX

NFC

- NFC_SWP1
- NFC_TO_BB_CLK_REQ
- BB_TO_NFC_CLK

GNSS

- PMU_TO_GNSS_EN
- UART_AP_TO_GNSS_TXD
- UART_GNSS_TO_AP_RXD
- UART_AP_TO_GNSS_RTS_L
- UART_GNSS_TO_AP_CTS_L
- AP_TO_BB_TIME_MARK
- AP_TO_GNSS_WAKE

DEBUG

- SWD_AOP_TO_MANY_SWCLK
- SWD_AOP_BI_BB_SWDIO
- PMU_TO_BB_USB_VBUS_DETECT
- 90_USB_BB_DATA_P
- 90_USB_BB_DATA_N

ANTENNA FEEDS

- 50_LAT_WLAN
- 50_UAT_WLAN_2G_SOUTH
- 50_UAT_WLAN_5G_SOUTH

RADIO_MLB

DRAWING TITLE	SCH,MLB,BOT,X893
Apple Inc.	DRAWING NUMBER 051-02247 SIZE D
	REVISION 7.0.0
	BRANCH evt-1
	PAGE 1 OF 17
	SHEET 13 OF 34

NOTICE OF PROPRIETARY PROPERTY:
THE INFORMATION CONTAINED HEREIN IS THE PROPRIETARY PROPERTY OF APPLE INC.
THE POSESSOR AGREES TO THE FOLLOWING:
I TO MAINTAIN THIS DOCUMENT IN CONFIDENCE
II NOT TO REPRODUCE OR COPY IT
III NOT TO REVEAL OR PUBLISH IT IN WHOLE OR PART
IV ALL RIGHTS RESERVED

CONFIDENTIAL AND PROPRIETARY APPLE SYSTEM DESIGN. FOR REFERENCE PURPOSE ONLY - NOT A CHANGE REQUEST

PDF Watermark Remover DEMO : Purchase from www.PDFWatermarkRemover.com to remove the watermark

BASEBAND

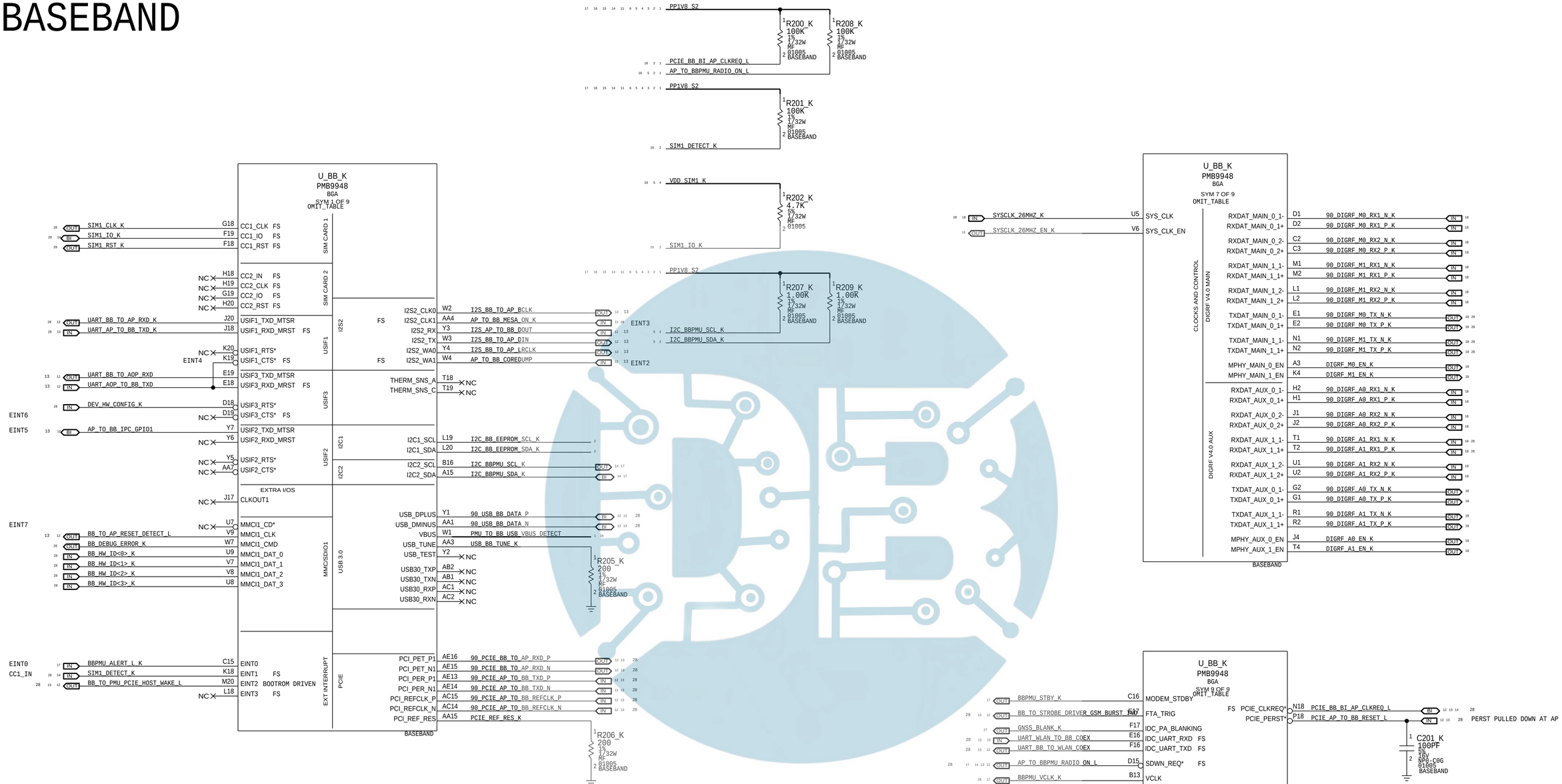

BB EEPROM

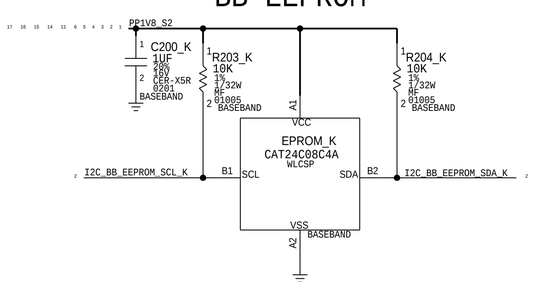

CONFIDENTIAL AND PROPRIETARY APPLE SYSTEM DESIGN. FOR REFERENCE PURPOSE ONLY - NOT A CHANGE REQUEST

PAGE TITLE: BASEBAND

Apple Inc.

DRAWING NUMBER: 051-02247 | SIZE: D

REVISION: 7.0.0

BRANCH: evt-1

PAGE: 2 OF 17

SHEET: 14 OF 34

NOTICE OF PROPRIETARY PROPERTY:
THE INFORMATION CONTAINED HEREIN IS THE PROPRIETARY PROPERTY OF APPLE INC.
THE POSESSOR AGREES TO THE FOLLOWING:
I TO MAINTAIN THIS DOCUMENT IN CONFIDENCE
II NOT TO REPRODUCE OR COPY IT
III NOT TO REVEAL OR PUBLISH IT IN WHOLE OR PART
IV ALL RIGHTS RESERVED

PDF Watermark Remover DEMO : Purchase from www.PDFWatermarkRemover.com to remove the watermark

BASEBAND MEMORY/DEBUG

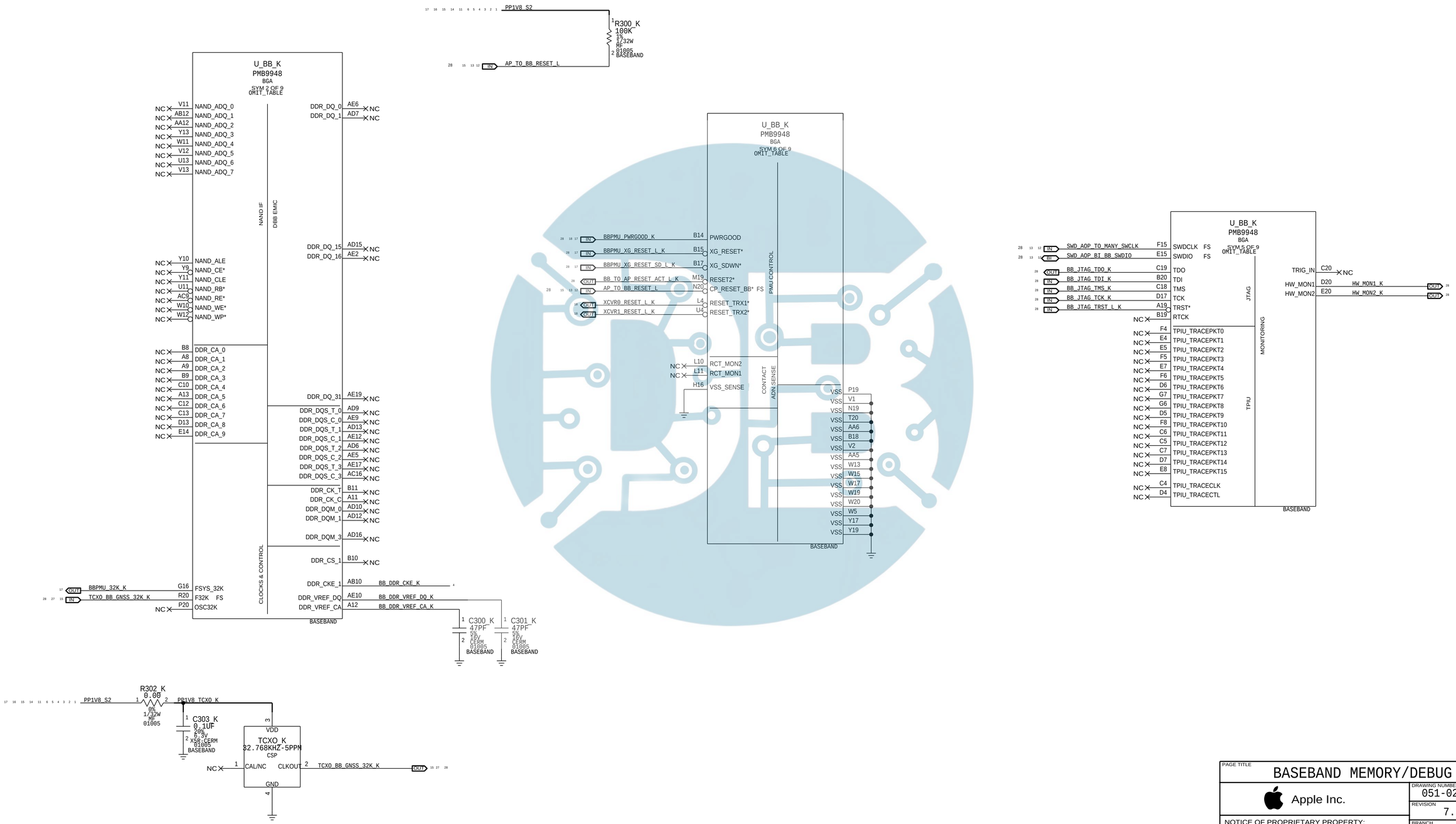

CONFIDENTIAL AND PROPRIETARY APPLE SYSTEM DESIGN. FOR REFERENCE PURPOSE ONLY - NOT A CHANGE REQUEST

PAGE TITLE	BASEBAND MEMORY/DEBUG
Apple Inc.	DRAWING NUMBER 051-02247 SIZE D
	REVISION 7.0.0
NOTICE OF PROPRIETARY PROPERTY: THE INFORMATION CONTAINED HEREIN IS THE PROPRIETARY PROPERTY OF APPLE INC. THE POSESSOR AGREES TO THE FOLLOWING: I TO MAINTAIN THIS DOCUMENT IN CONFIDENCE II NOT TO REPRODUCE OR COPY IT III NOT TO REVEAL OR PUBLISH IT IN WHOLE OR PART IV ALL RIGHTS RESERVED	BRANCH evt-1
	PAGE 3 OF 17
	SHEET 15 OF 34

PDF Watermark Remover DEMO : Purchase from www.PDFWatermarkRemover.com to remove the watermark

BASEBAND POWER

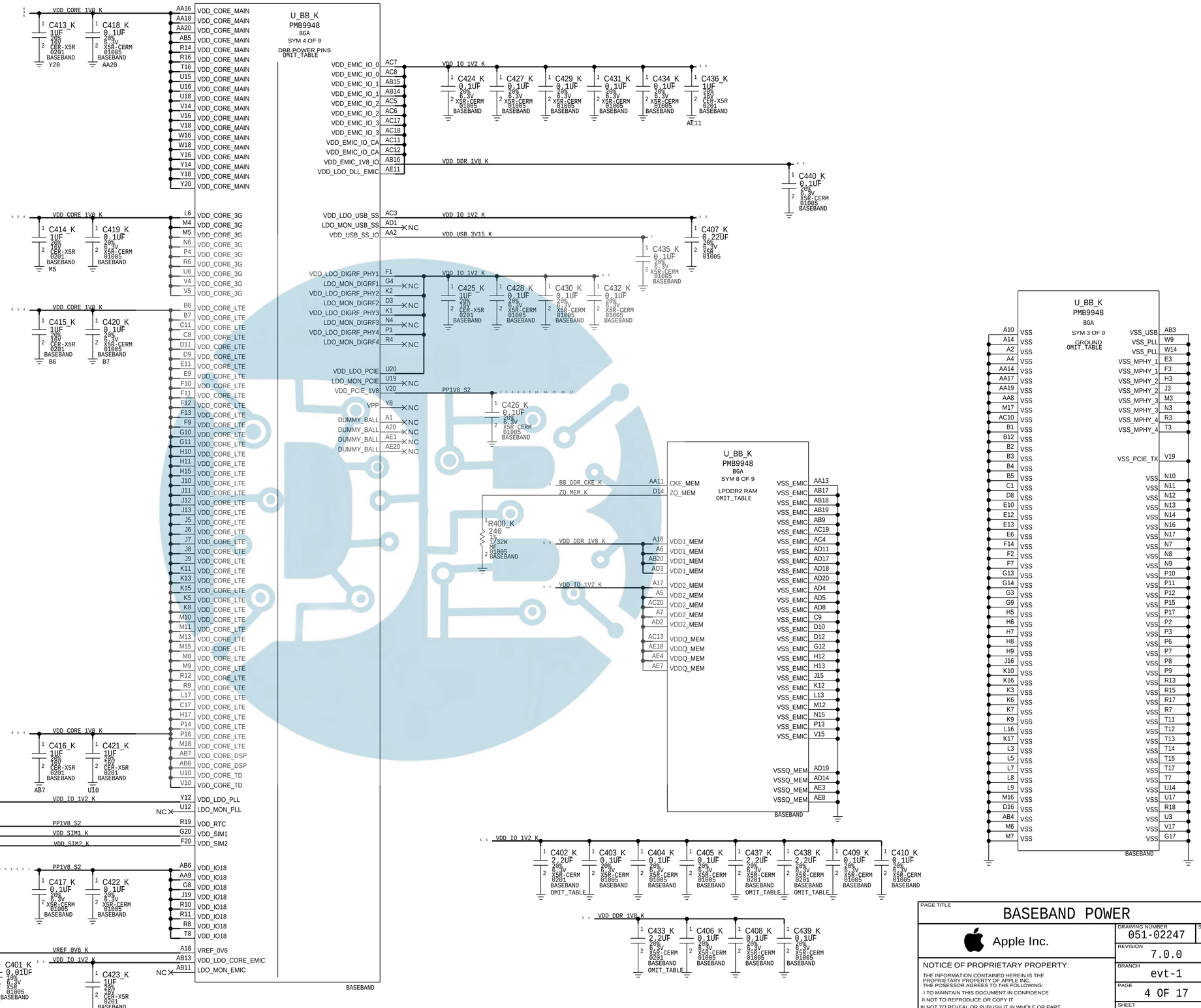

CONFIDENTIAL AND PROPRIETARY APPLE SYSTEM DESIGN. FOR REFERENCE PURPOSE ONLY - NOT A CHANGE REQUEST

PAGE TITLE: BASEBAND POWER

Apple Inc.

DRAWING NUMBER: 051-02247 | SIZE: D

REVISION: 7.0.0

BRANCH: evt-1

PAGE: 4 OF 17

SHEET: 16 OF 34

NOTICE OF PROPRIETARY PROPERTY:
THE INFORMATION CONTAINED HEREIN IS THE PROPRIETARY PROPERTY OF APPLE INC.
THE POSESSOR AGREES TO THE FOLLOWING:
I TO MAINTAIN THIS DOCUMENT IN CONFIDENCE
II NOT TO REPRODUCE OR COPY IT
III NOT TO REVEAL OR PUBLISH IT IN WHOLE OR PART
IV ALL RIGHTS RESERVED

PDF Watermark Remover DEMO : Purchase from www.PDFWatermarkRemover.com to remove the watermark

BASEBAND PMIC

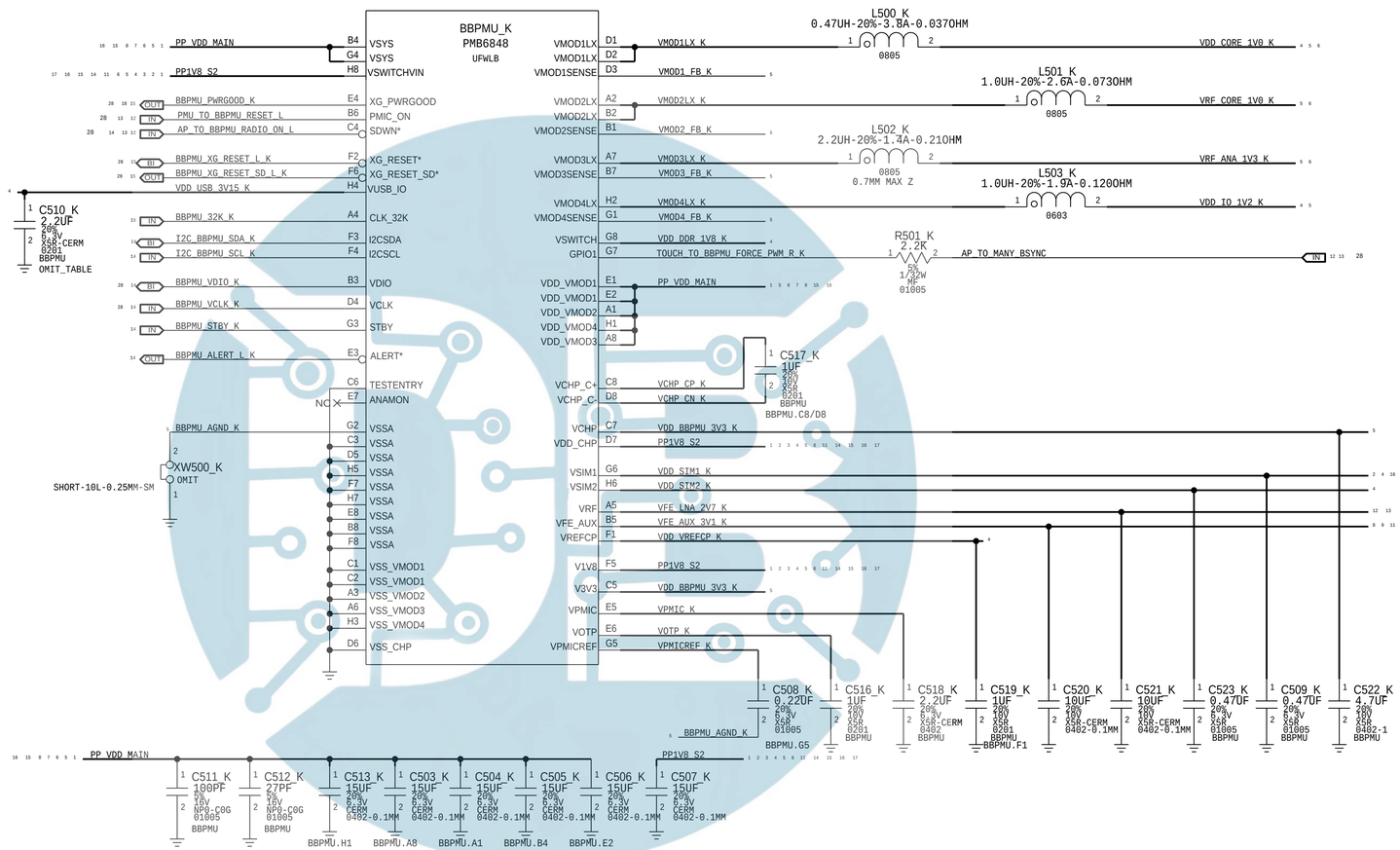

CONFIDENTIAL AND PROPRIETARY APPLE SYSTEM DESIGN. FOR REFERENCE PURPOSE ONLY - NOT A CHANGE REQUEST

PAGE TITLE	BASEBAND PMIC
Apple Inc.	DRAWING NUMBER 051-02247 · SIZE D
	REVISION 7.0.0
NOTICE OF PROPRIETARY PROPERTY: THE INFORMATION CONTAINED HEREIN IS THE PROPRIETARY PROPERTY OF APPLE INC. THE POSESSOR AGREES TO THE FOLLOWING: I TO MAINTAIN THIS DOCUMENT IN CONFIDENCE II NOT TO REPRODUCE OR COPY IT III NOT TO REVEAL OR PUBLISH IT IN WHOLE OR PART IV ALL RIGHTS RESERVED	BRANCH evt-1
	PAGE 5 OF 17
	SHEET 17 OF 34

PDF Watermark Remover DEMO : Purchase from www.PDFWatermarkRemover.com to remove the watermark

TRANSCEIVERS

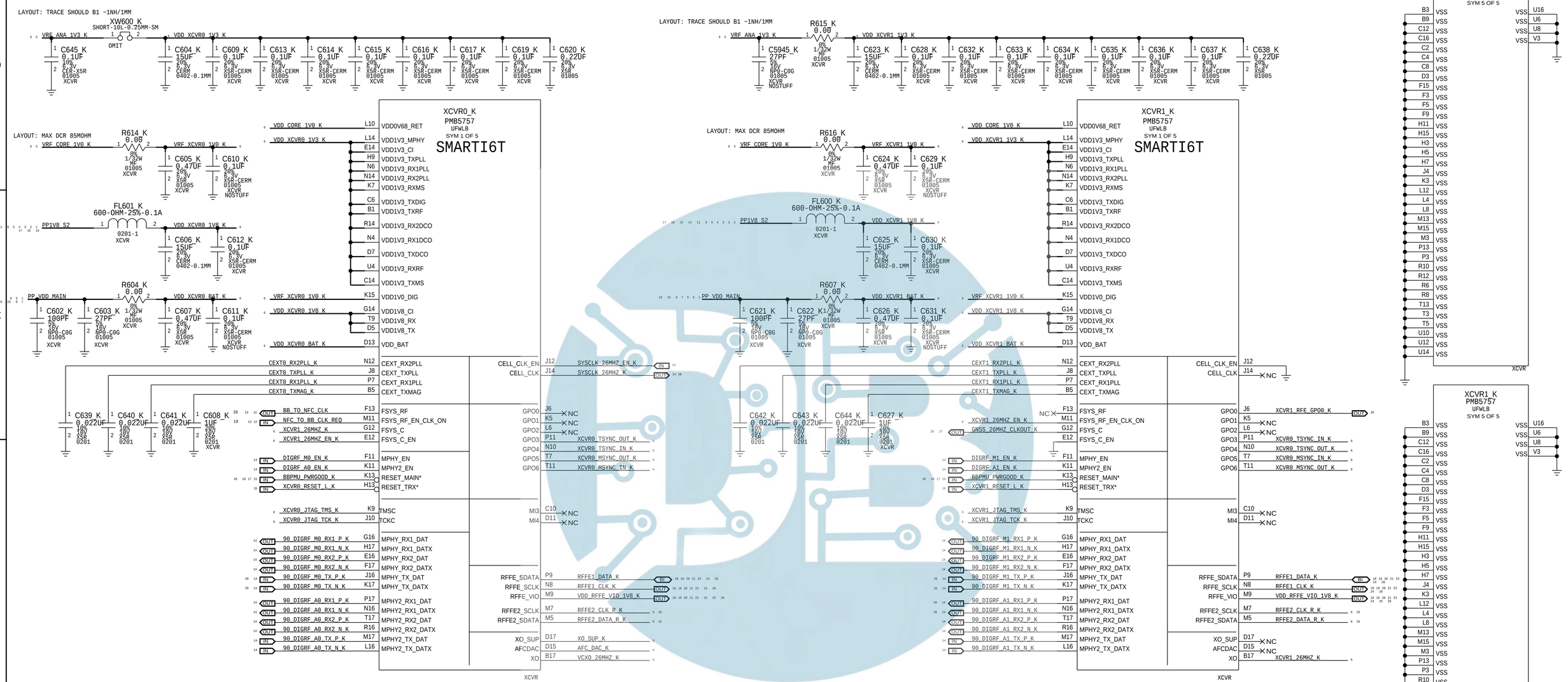

VCTCX0

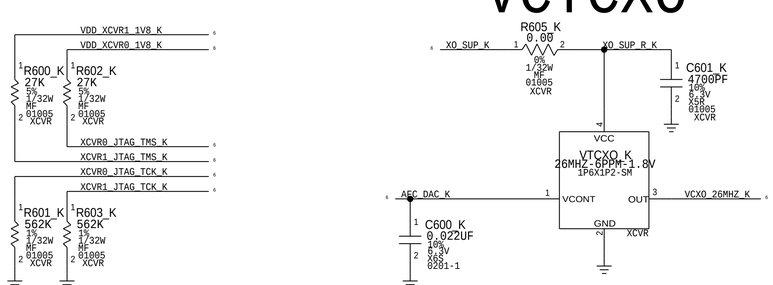

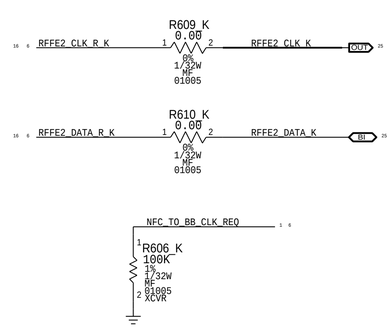

NOTE: GNSS_CLK REQUESTED WITH AT@CMD

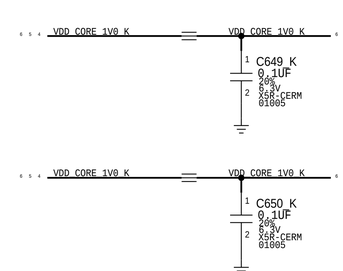

PAGE TITLE	TRANSCEIVERS
Apple Inc.	DRAWING NUMBER 051-02247 / SIZE D
	REVISION 7.0.0
	BRANCH evt-1
	PAGE 6 OF 17
	SHEET 18 OF 34

NOTICE OF PROPRIETARY PROPERTY:
THE INFORMATION CONTAINED HEREIN IS THE PROPRIETARY PROPERTY OF APPLE INC.
THE POSESSOR AGREES TO THE FOLLOWING:
I TO MAINTAIN THIS DOCUMENT IN CONFIDENCE
II NOT TO REPRODUCE OR COPY IT
III NOT TO REVEAL OR PUBLISH IT IN WHOLE OR PART
IV ALL RIGHTS RESERVED

CONFIDENTIAL AND PROPRIETARY APPLE SYSTEM DESIGN. FOR REFERENCE PURPOSE ONLY - NOT A CHANGE REQUEST

PDF Watermark Remover DEMO : Purchase from www.PDFWatermarkRemover.com to remove the watermark

ET MODULATOR

ALPES II MODULE

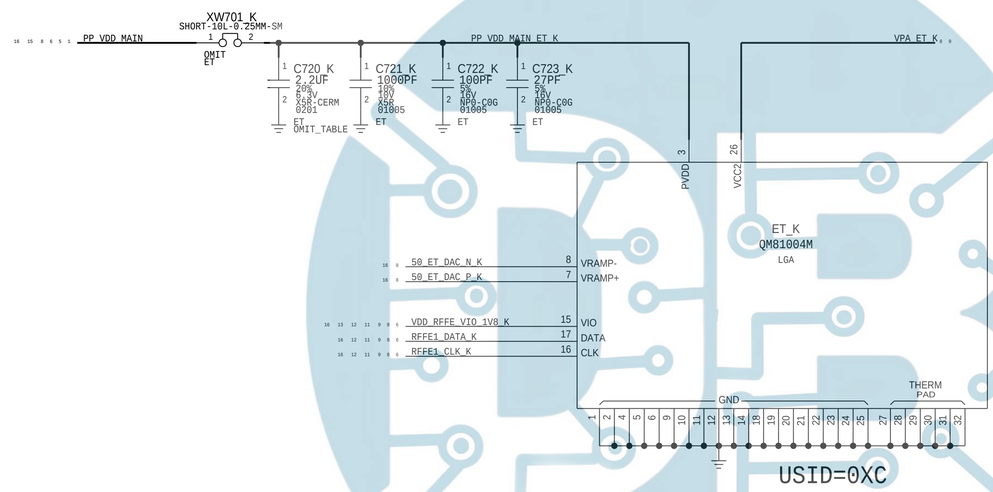

CONFIDENTIAL AND PROPRIETARY APPLE SYSTEM DESIGN. FOR REFERENCE PURPOSE ONLY - NOT A CHANGE REQUEST

PAGE TITLE	ET MODULATOR
Apple Inc.	DRAWING NUMBER 051-02247 SIZE D
	REVISION 7.0.0
NOTICE OF PROPRIETARY PROPERTY: THE INFORMATION CONTAINED HEREIN IS THE PROPRIETARY PROPERTY OF APPLE INC. THE POSESSOR AGREES TO THE FOLLOWING: I TO MAINTAIN THIS DOCUMENT IN CONFIDENCE II NOT TO REPRODUCE OR COPY IT III NOT TO REVEAL OR PUBLISH IT IN WHOLE OR PART IV ALL RIGHTS RESERVED	BRANCH evt-1
	PAGE 7 OF 17
	SHEET 19 OF 34

PDF Watermark Remover DEMO : Purchase from www.PDFWatermarkRemover.com to remove the watermark

TDD TRANSMIT

2G PA

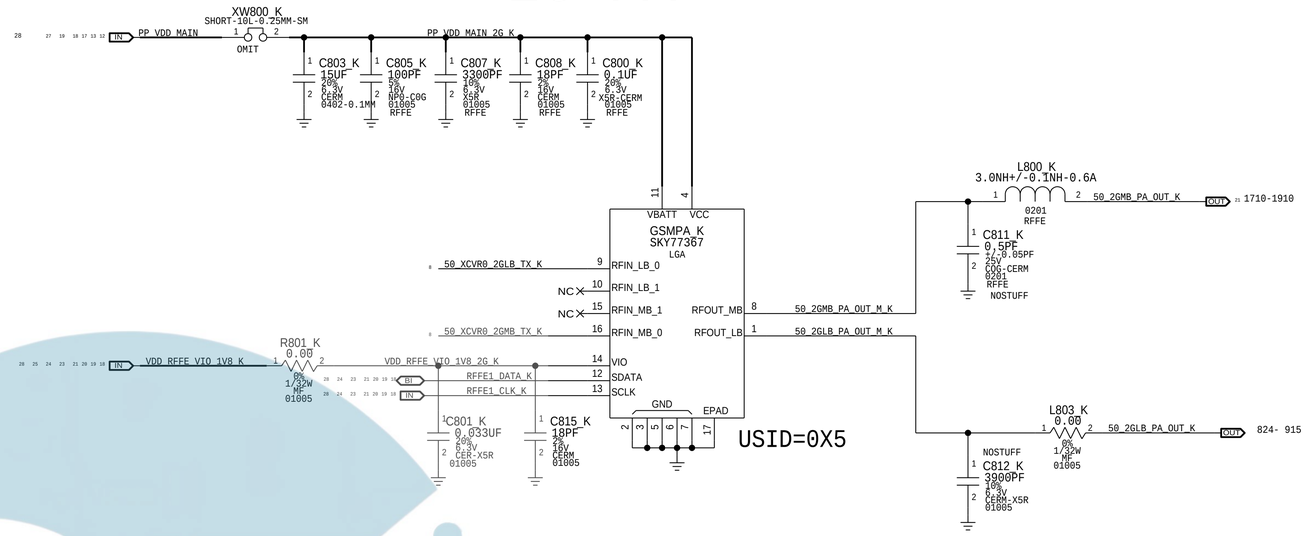

XCVR0 TX

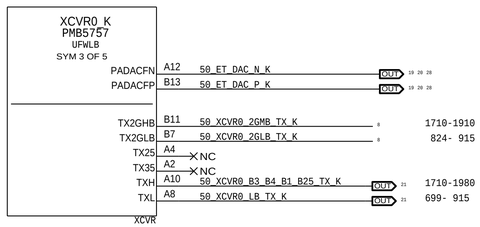

MB HB TDD S-PAD

XCVR1 TX

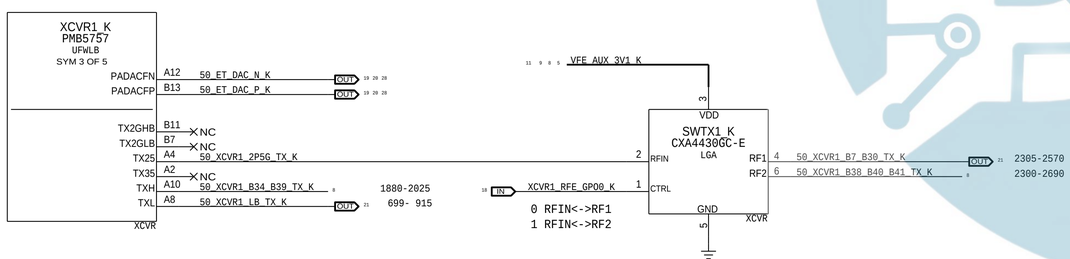

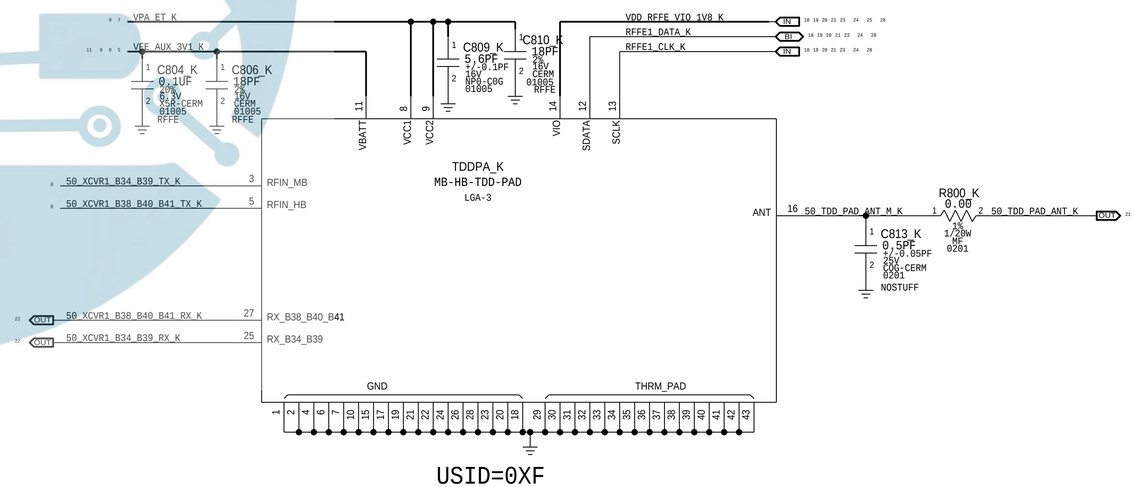

PAGE TITLE	TDD TRANSMIT
Apple Inc.	DRAWING NUMBER 051-02247 / SIZE D
	REVISION 7.0.0
	BRANCH evt-1
	PAGE 8 OF 17
	SHEET 20 OF 34

NOTICE OF PROPRIETARY PROPERTY:
THE INFORMATION CONTAINED HEREIN IS THE PROPRIETARY PROPERTY OF APPLE INC.
THE POSESSOR AGREES TO THE FOLLOWING:
I TO MAINTAIN THIS DOCUMENT IN CONFIDENCE
II NOT TO REPRODUCE OR COPY IT
III NOT TO REVEAL OR PUBLISH IT IN WHOLE OR PART
IV ALL RIGHTS RESERVED

CONFIDENTIAL AND PROPRIETARY APPLE SYSTEM DESIGN. FOR REFERENCE PURPOSE ONLY - NOT A CHANGE REQUEST

PDF Watermark Remover DEMO : Purchase from www.PDFWatermarkRemover.com to remove the watermark

FDD TRANSMIT

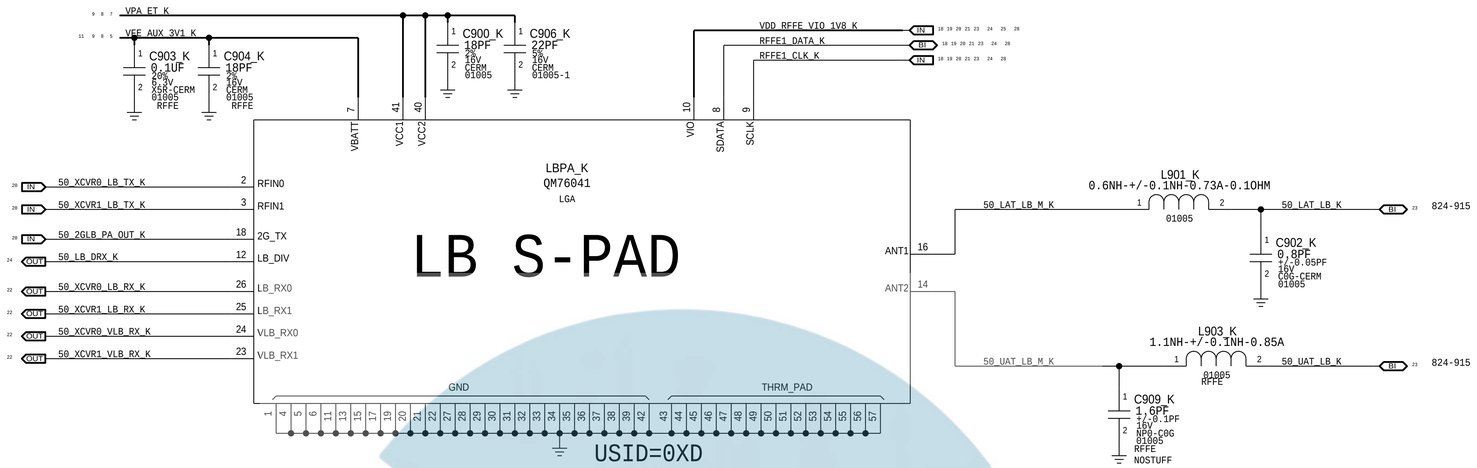

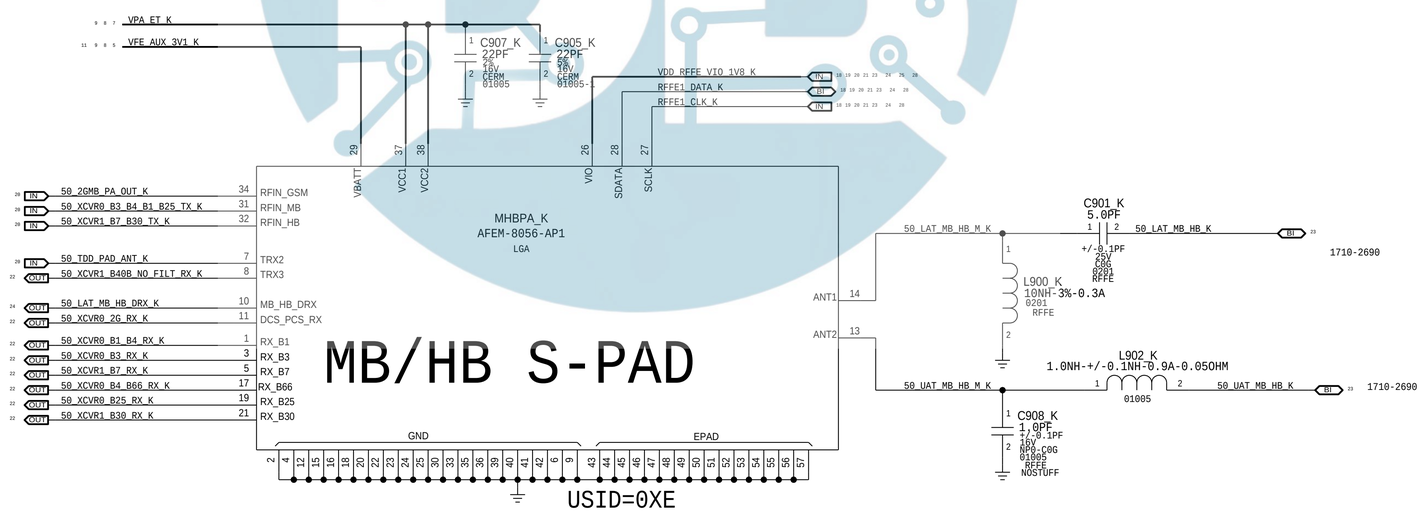

PAGE TITLE	FDD TRANSMIT
Apple Inc.	DRAWING NUMBER 051-02247 SIZE D
	REVISION 7.0.0
NOTICE OF PROPRIETARY PROPERTY: THE INFORMATION CONTAINED HEREIN IS THE PROPRIETARY PROPERTY OF APPLE INC. THE POSESSOR AGREES TO THE FOLLOWING: I TO MAINTAIN THIS DOCUMENT IN CONFIDENCE II NOT TO REPRODUCE OR COPY IT III NOT TO REVEAL OR PUBLISH IT IN WHOLE OR PART IV ALL RIGHTS RESERVED	BRANCH evt-1
	PAGE 9 OF 17
	SHEET 21 OF 34

CONFIDENTIAL AND PROPRIETARY APPLE SYSTEM DESIGN. FOR REFERENCE PURPOSE ONLY - NOT A CHANGE REQUEST

PDF Watermark Remover DEMO : Purchase from www.PDFWatermarkRemover.com to remove the watermark

PRIMARY RECIEVE

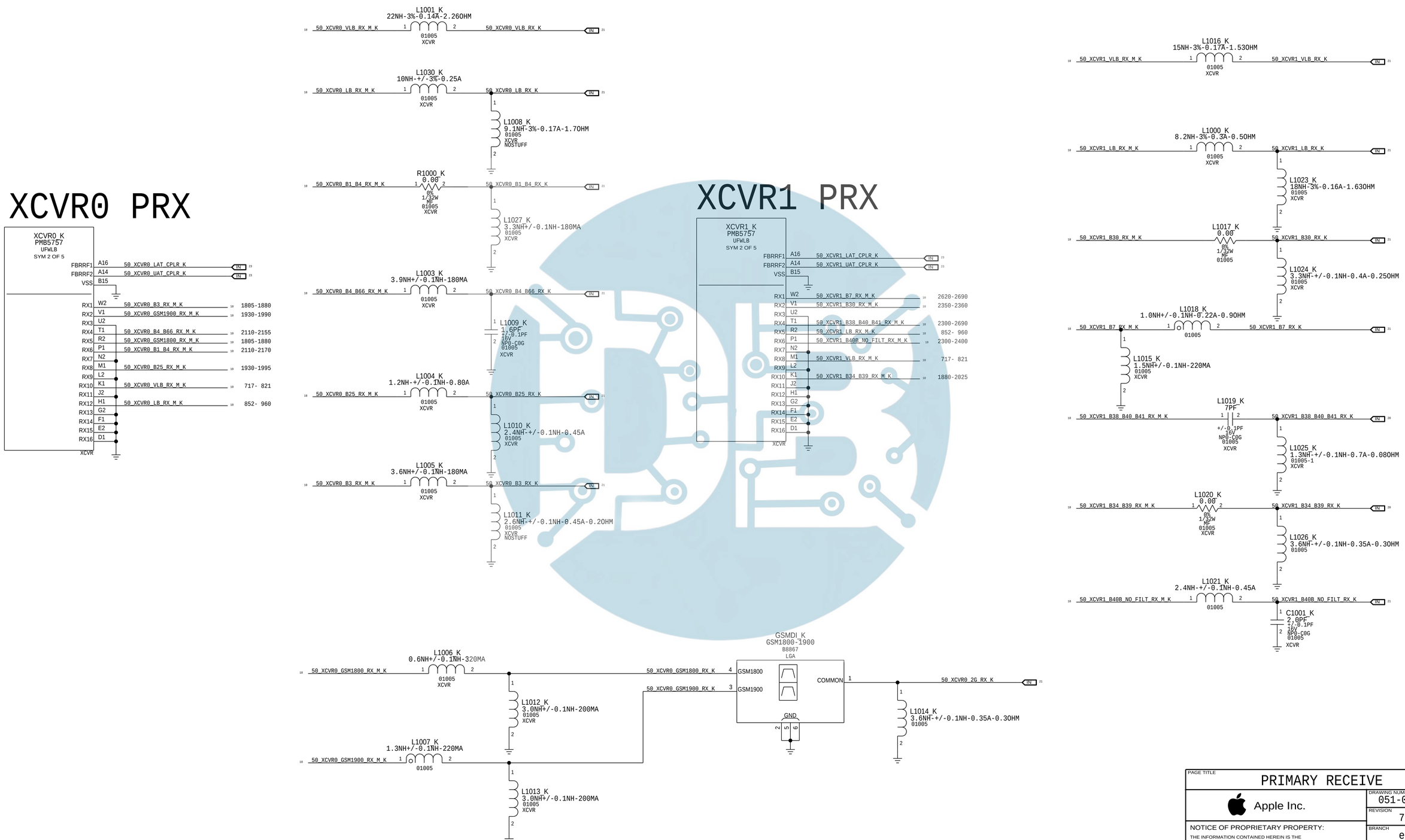

CONFIDENTIAL AND PROPRIETARY APPLE SYSTEM DESIGN. FOR REFERENCE PURPOSE ONLY - NOT A CHANGE REQUEST

PAGE TITLE	PRIMARY RECEIVE
Apple Inc.	DRAWING NUMBER 051-02247 · SIZE D
	REVISION 7.0.0
	BRANCH evt-1
	PAGE 10 OF 17
	SHEET 22 OF 34

NOTICE OF PROPRIETARY PROPERTY:
THE INFORMATION CONTAINED HEREIN IS THE PROPRIETARY PROPERTY OF APPLE INC.
THE POSESSOR AGREES TO THE FOLLOWING:
I TO MAINTAIN THIS DOCUMENT IN CONFIDENCE
II NOT TO REPRODUCE OR COPY IT
III NOT TO REVEAL OR PUBLISH IT IN WHOLE OR PART
IV ALL RIGHTS RESERVED

PDF Watermark Remover DEMO : Purchase from www.PDFWatermarkRemover.com to remove the watermark

LOWER ANTENNA AND COUPLER

LOWER ANTENNA COUPLER

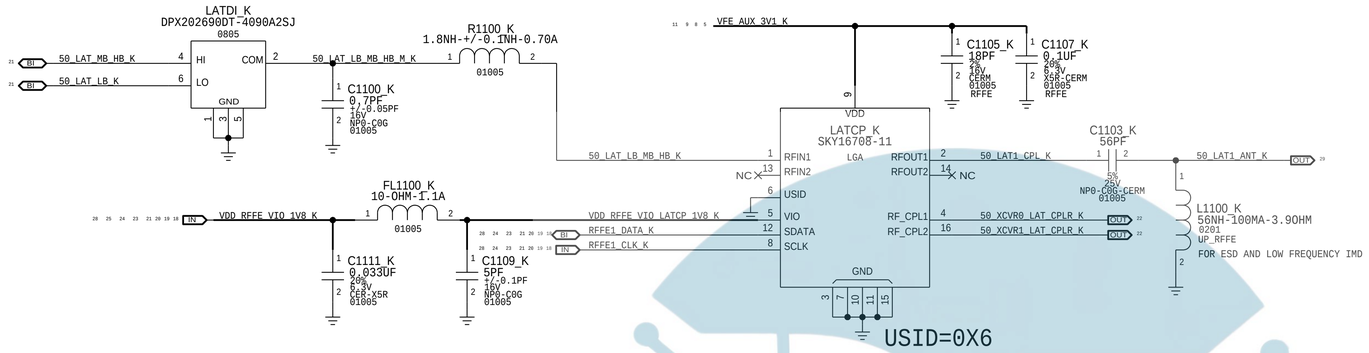

UPPER ANTENNA COUPLER

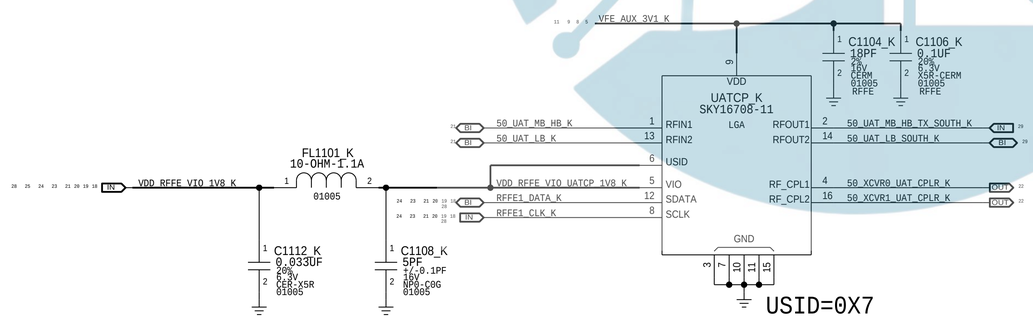

LAT TUNER GPO

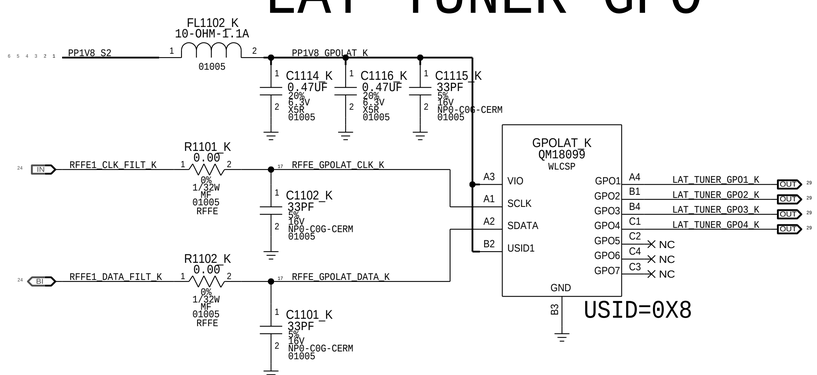

PAGE TITLE	LOWER ANTENNA & COUPLERS
Apple Inc.	DRAWING NUMBER 051-02247 SIZE D
	REVISION 7.0.0
NOTICE OF PROPRIETARY PROPERTY: THE INFORMATION CONTAINED HEREIN IS THE PROPRIETARY PROPERTY OF APPLE INC. THE POSESSOR AGREES TO THE FOLLOWING: I TO MAINTAIN THIS DOCUMENT IN CONFIDENCE II NOT TO REPRODUCE OR COPY IT III NOT TO REVEAL OR PUBLISH IT IN WHOLE OR PART IV ALL RIGHTS RESERVED	BRANCH evt-1
	PAGE 11 OF 17
	SHEET 23 OF 34

CONFIDENTIAL AND PROPRIETARY APPLE SYSTEM DESIGN. FOR REFERENCE PURPOSE ONLY - NOT A CHANGE REQUEST

PDF Watermark Remover DEMO : Purchase from www.PDFWatermarkRemover.com to remove the watermark

DIVERSITY RECEIVE ASM'S

XCVR0 DRX

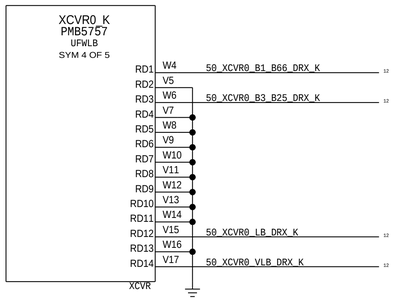

XCVR1 DRX

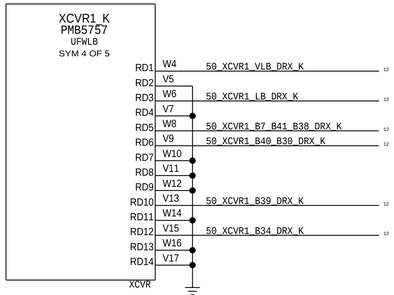

RFFE FILTERING

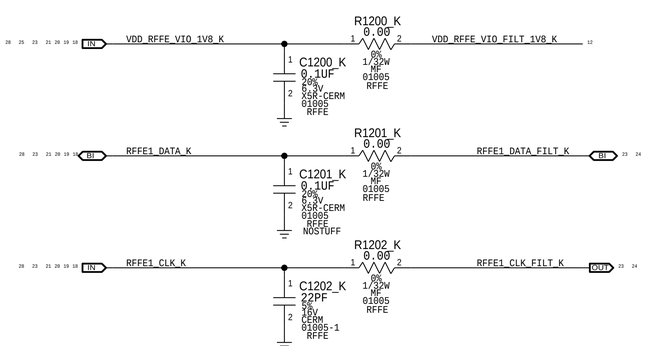

DRX DSM

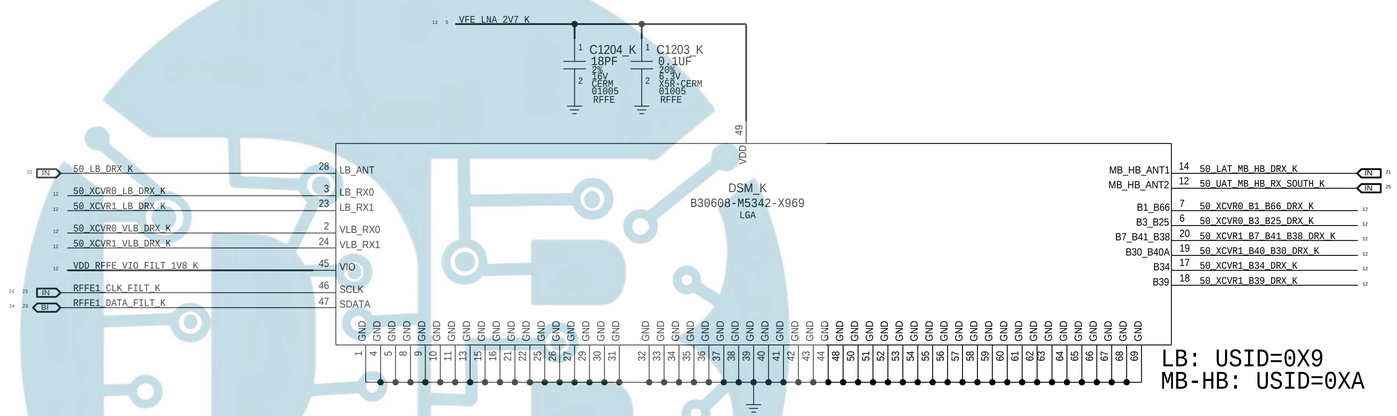

CONFIDENTIAL AND PROPRIETARY APPLE SYSTEM DESIGN. FOR REFERENCE PURPOSE ONLY - NOT A CHANGE REQUEST

PAGE TITLE	DIVERSITY RECEIVE ASM'S
Apple Inc.	DRAWING NUMBER 051-02247 SIZE D
	REVISION 7.0.0
	BRANCH evt-1
	PAGE 12 OF 17
	SHEET 24 OF 34

NOTICE OF PROPRIETARY PROPERTY:
THE INFORMATION CONTAINED HEREIN IS THE PROPRIETARY PROPERTY OF APPLE INC.
THE POSESSOR AGREES TO THE FOLLOWING:
I TO MAINTAIN THIS DOCUMENT IN CONFIDENCE
II NOT TO REPRODUCE OR COPY IT
III NOT TO REVEAL OR PUBLISH IT IN WHOLE OR PART
IV ALL RIGHTS RESERVED

PDF Watermark Remover DEMO : Purchase from www.PDFWatermarkRemover.com to remove the watermark

DIVERSITY RECEIVE LNAS

LB DRX LNA

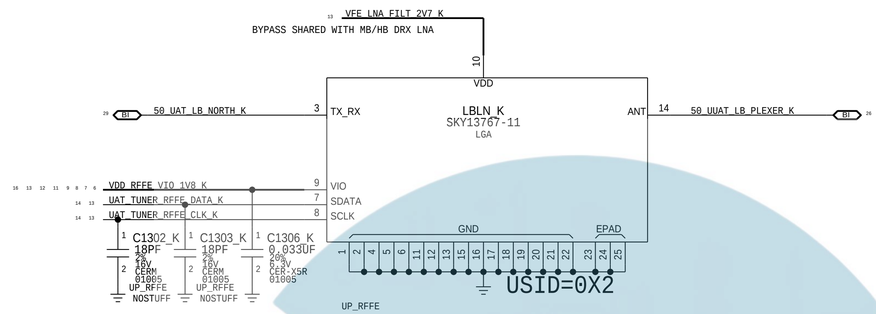

MB/HB DRX LNA

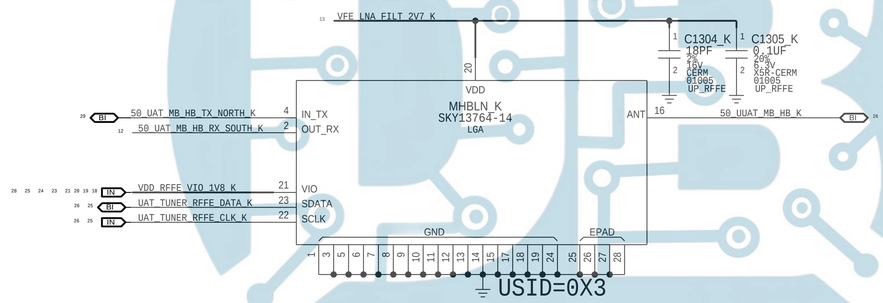

RFFE2 IMPEDANCE MATCHING

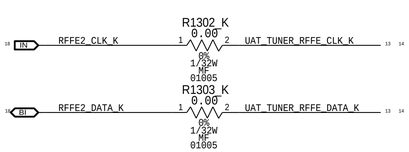

CONFIDENTIAL AND PROPRIETARY APPLE SYSTEM DESIGN. FOR REFERENCE PURPOSE ONLY - NOT A CHANGE REQUEST

PAGE TITLE	DIVERSITY RECEIVE LNA'S
Apple Inc.	DRAWING NUMBER 051-02247 SIZE D
	REVISION 7.0.0
	BRANCH evt-1
	PAGE 13 OF 17
	SHEET 25 OF 34

NOTICE OF PROPRIETARY PROPERTY:
THE INFORMATION CONTAINED HEREIN IS THE PROPRIETARY PROPERTY OF APPLE INC.
THE POSESSOR AGREES TO THE FOLLOWING:
I TO MAINTAIN THIS DOCUMENT IN CONFIDENCE
II NOT TO REPRODUCE OR COPY IT
III NOT TO REVEAL OR PUBLISH IT IN WHOLE OR PART
IV ALL RIGHTS RESERVED

PDF Watermark Remover DEMO : Purchase from www.PDFWatermarkRemover.com to remove the watermark

UPPER ANTENNA FEEDS

UAT1

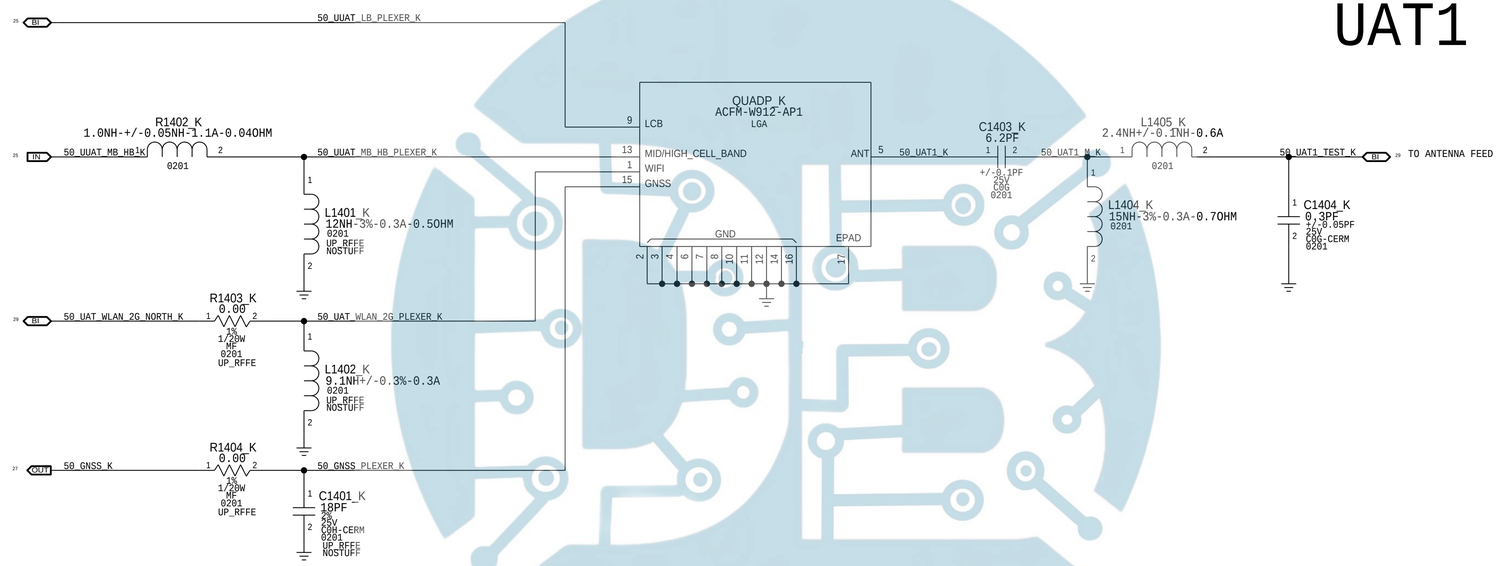

UAT TUNER GPO

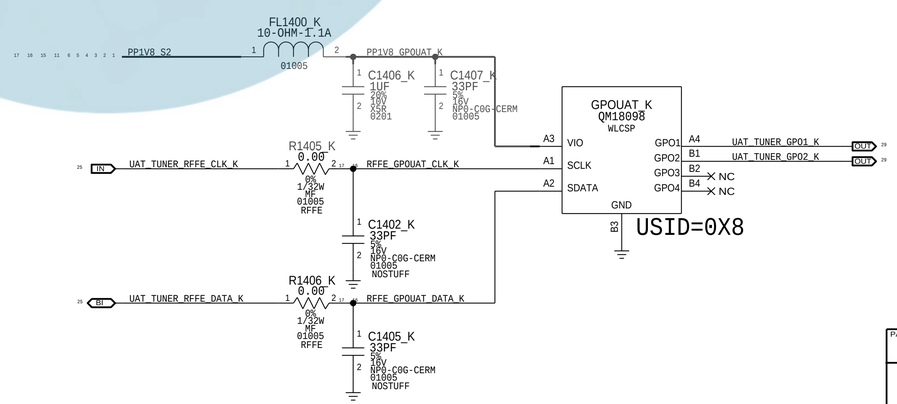

PAGE TITLE	UPPER ANTENNA FEEDS
Apple Inc.	DRAWING NUMBER 051-02247 SIZE D
	REVISION 7.0.0
NOTICE OF PROPRIETARY PROPERTY: THE INFORMATION CONTAINED HEREIN IS THE PROPRIETARY PROPERTY OF APPLE INC. THE POSESSOR AGREES TO THE FOLLOWING: I TO MAINTAIN THIS DOCUMENT IN CONFIDENCE II NOT TO REPRODUCE OR COPY IT III NOT TO REVEAL OR PUBLISH IT IN WHOLE OR PART IV ALL RIGHTS RESERVED	BRANCH evt-1
	PAGE 14 OF 17
	SHEET 26 OF 34

CONFIDENTIAL AND PROPRIETARY APPLE SYSTEM DESIGN. FOR REFERENCE PURPOSE ONLY - NOT A CHANGE REQUEST

PDF Watermark Remover DEMO : Purchase from www.PDFWatermarkRemover.com to remove the watermark

GNSS LNA + RECEIVER

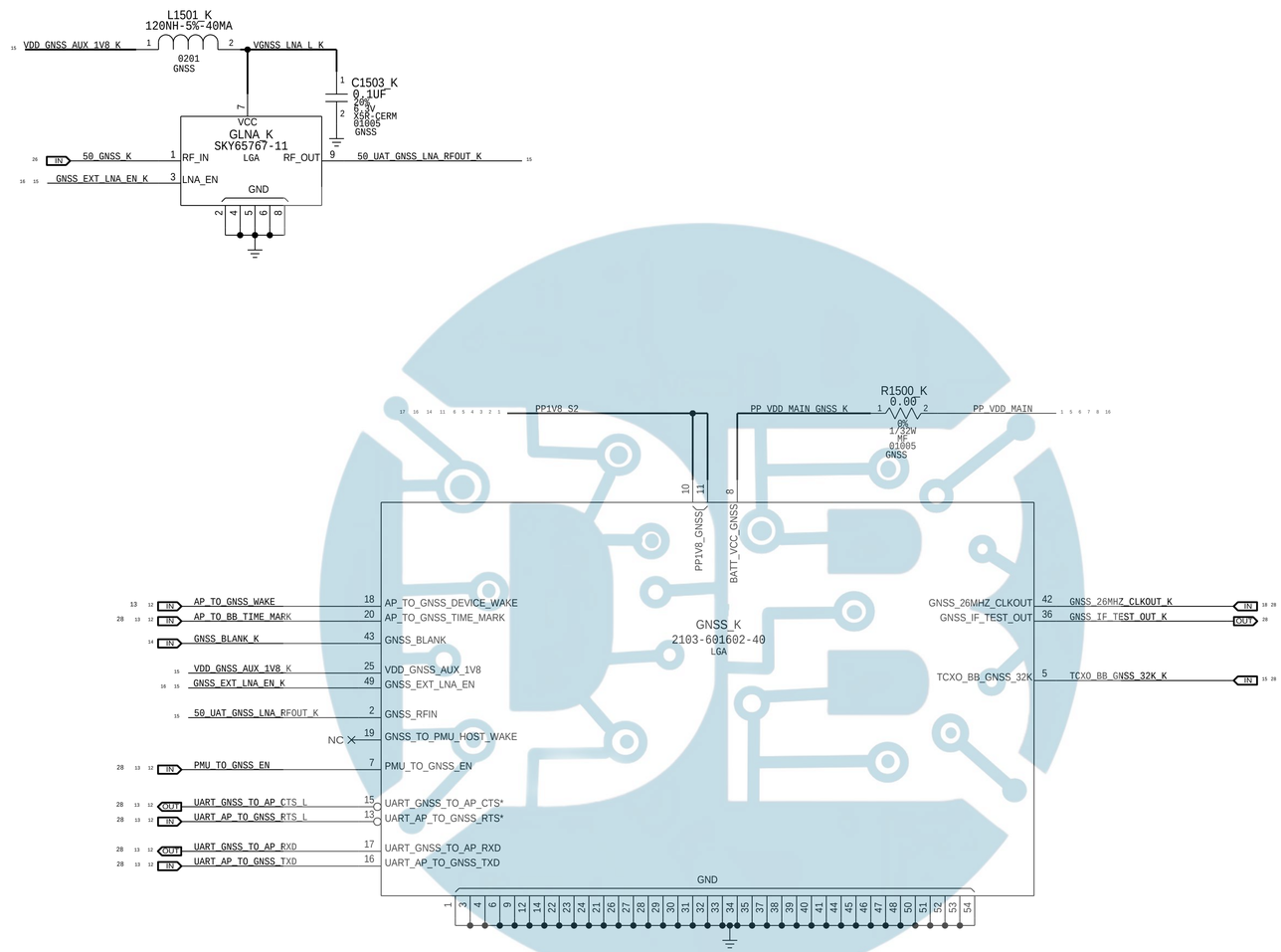

CONFIDENTIAL AND PROPRIETARY APPLE SYSTEM DESIGN. FOR REFERENCE PURPOSE ONLY - NOT A CHANGE REQUEST

PAGE TITLE	GNSS
Apple Inc.	DRAWING NUMBER 051-02247 SIZE D
	REVISION 7.0.0
NOTICE OF PROPRIETARY PROPERTY: THE INFORMATION CONTAINED HEREIN IS THE PROPRIETARY PROPERTY OF APPLE INC. THE POSESSOR AGREES TO THE FOLLOWING: I TO MAINTAIN THIS DOCUMENT IN CONFIDENCE II NOT TO REPRODUCE OR COPY IT III NOT TO REVEAL OR PUBLISH IT IN WHOLE OR PART IV ALL RIGHTS RESERVED	BRANCH evt-1
	PAGE 15 OF 17
	SHEET 27 OF 34

PDF Watermark Remover DEMO : Purchase from www.PDFWatermarkRemover.com to remove the watermark

MLB TEST POINTS

BASEBAND

PP1600_K P2MM-NSM SM 1 AP_TO_BBPMU_RADIO_ON_L OMIT
PP1601_K P2MM-NSM SM 1 BBPMU_PWRGOOD_K OMIT
PP1602_K P2MM-NSM SM 1 BBPMU_XG_RESET_L_K OMIT
PP1603_K P2MM-NSM SM 1 BBPMU_XG_RESET_SD_L_K OMIT
PP1604_K P2MM-NSM SM 1 TCXO_BB_GNSS_32K_K OMIT
PP1605_K P2MM-NSM SM 1 BB_DEBUG_ERROR_K OMIT
PP1606_K P2MM-NSM SM 1 AP_TO_BB_MESA_ON_K OMIT
PP1607_K P2MM-NSM SM 1 BB_TO_STROBE_DRIVER_GSM_BURST_IND OMIT
PP1640_K P2MM-NSM SM 1 BB_TO_AP_RESET_ACT_L_K OMIT

RFFE

PP1648_K P2MM-NSM SM 1 VDD_RFFE_VIO_1V8_K OMIT
PP1649_K P2MM-NSM SM 1 RFFE1_CLK_K OMIT
PP1650_K P2MM-NSM SM 1 RFFE1_DATA_K OMIT
PP1653_K P2MM-NSM SM 1 RFFE1_CLK_K OMIT
PP1654_K P2MM-NSM SM 1 RFFE1_DATA_K OMIT
PP1651_K P2MM-NSM SM 1 RFFE2_CLK_R_K OMIT
PP1652_K P2MM-NSM SM 1 RFFE2_DATA_R_K OMIT
PP1655_K P2MM-NSM SM 1 RFFE_GPOUAT_CLK_K OMIT
PP1656_K P2MM-NSM SM 1 RFFE_GPOUAT_DATA_K OMIT

PLACE NEAR LBPA/MHBPA
PLACE NEAR XCVR0
PLACE NEAR XCVR1

SIM CARD CONNECTOR

J_SIM_K SIMCARD-BEACH-D22 F-RT-SM
SIM_DETECT_SPG, CLK, RESET, VCC, GND, SIM_DETECT, IO, SWP
SIM1_CLK_R_K, SIM1_RST_R_K, VDD_SIM1_K
SIM1_DETECT_R_K, SIM1_IO_R_K, SIM1_SWP_R_K
C1601_K 2.2UF 20% 6.3V X5R-CERM 0201 SIM OMIT_TABLE
DZ1605_K 12V-33PF 01005-1 SIM
DZ1600_K 5.5V-6.2PF 0201 SIM
C1600_K 100PF 5% 10V NPO-C0G 01005 BASEBAND

DZ1606_K SG-WLL-Z-2 ESD202-B1-CSP01005
DZ1608_K SG-WLL-Z-2 ESD202-B1-CSP01005
DZ1607_K SG-WLL-Z-2 ESD202-B1-CSP01005
DZ1609_K SG-WLL-Z-2 ESD202-B1-CSP01005

R1613_K 10 5% 1/32W MF 01005 SIM1_IO_K — SIM1_IO_R_K
R1614_K 10 5% 1/32W MF 01005 SIM1_CLK_K — SIM1_CLK_R_K
R1615_K 10 5% 1/32W MF 01005 SIM1_RST_K — SIM1_RST_R_K
R1616_K 10 5% 1/32W MF 01005 NFC_SWP1 — SIM1_SWP_R_K
R1617_K 10 5% 1/32W MF 01005 SIM1_DETECT_K — SIM1_DETECT_R_K

HARDWARE ID

PP1V8_S2
R1611_K 1.00K 1% 1/32W MF 01005 BASEBAND OMIT
R1600_K 1.00K 1% 1/32W MF 01005 BASEBAND OMIT
R1602_K 1.00K 1% 1/32W MF 01005 BASEBAND
R1605_K 1.00K 1% 1/32W MF 01005 BASEBAND
R1612_K 1.00K 1% 1/32W MF 01005 BASEBAND
R1601_K 1.00K 1% 1/32W MF 01005 BASEBAND
R1603_K 1.00K 1% 1/32W MF 01005 BASEBAND OMIT
R1606_K 1.00K 1% 1/32W MF 01005 BASEBAND OMIT
BB_HW_ID<0>_K, BB_HW_ID<1>_K, BB_HW_ID<2>_K, BB_HW_ID<3>_K

HARDWARE	HW_ID<3:0>
ICE17.2 RF DEV1	0 0 0 Z
ICE17.2 RF DEV2	0 0 Z 0
RESERVED	0 0 Z Z
RESERVED	0 Z 0 0
RESERVED	0 Z 0 Z

HARDWARE	HW_ID<3:0>
ICE17.2 PROTO1	0 0 0 0
ICE17.2 PROTO2	0 0 0 1
ICE17.2 PROTO3	0 0 1 0
ICE17.2 EVT	0 0 1 1
RESERVED	0 1 0 0

DEV CONFIG

PP1V8_S2
R1608_K 1.00K 1% 1/32W MF 01005 BASEBAND NOSTUFF
DEV_HW_CONFIG_K
R1609_K 1.00K 1% 1/32W MF 01005 BASEBAND NOSTUFF

HW_CONFIG	DEV_HW_CONFIG
RESERVED	Z
RESERVED	0
RESERVED	1

BOOTCFG

PP1V8_S2
R1604_K 1.00K 1% 1/32W MF 01005 BASEBAND
R1607_K 1.00K 1% 1/32W MF 01005 BASEBAND
HW_MON1_K, HW_MON2_K
R1610_K 1.00K 1% 1/32W MF 01005 BASEBAND NOSTUFF
PCIE_AP_TO_BB_RESET_L
STUFF FOR VENDOR CONFIG ONLY

	HW_MON1	HW_MON2	TRIG_IN
NAND	0	0	1
FLASHLESS	1	0	1
FLASHLESS WDOG DIS	1	1	0
NAND	1	1	1

BOOTSTRAPS ARE INTERNALLY PULLED DOWN

XCVR

PP1615_K P2MM-NSM SM 1 SYSCLK_26MHZ_K OMIT
PP1657_K P2MM-NSM SM 1 BB_TO_NFC_CLK OMIT
PP1658_K P2MM-NSM SM 1 GNSS_26MHZ_CLKOUT_K OMIT

ETIC

PP1616_K P2MM-NSM SM 1 50_ET_DAC_P_K OMIT
PP1617_K P2MM-NSM SM 1 50_ET_DAC_N_K OMIT

BBPMU

PP1627_K P2MM-NSM SM 1 BBPMU_VCLK_K OMIT
PP1628_K P2MM-NSM SM 1 BBPMU_VDIO_K OMIT
PP1608_K P2MM-NSM SM 1 AP_TO_MANY_BSYNC OMIT

PCIE

PP1641_K P2MM-NSM SM 1 90_PCIE_AP_TO_BB_REFCLK_P OMIT
PP1642_K P2MM-NSM SM 1 90_PCIE_AP_TO_BB_REFCLK_N OMIT
PP1609_K P2MM-NSM SM 1 90_PCIE_AP_TO_BB_TXD_P OMIT
PP1610_K P2MM-NSM SM 1 90_PCIE_AP_TO_BB_TXD_N OMIT
PP1635_K P2MM-NSM SM 1 90_PCIE_BB_TO_AP_RXD_P OMIT
PP1611_K P2MM-NSM SM 1 90_PCIE_BB_TO_AP_RXD_N OMIT
PP1612_K P2MM-NSM SM 1 PCIE_AP_TO_BB_RESET_L OMIT
PP1613_K P2MM-NSM SM 1 PCIE_BB_BI_AP_CLKREQ_L OMIT
PP1614_K P2MM-NSM SM 1 BB_TO_PMU_PCIE_HOST_WAKE_L OMIT

GNSS

PP1618_K P2MM-NSM SM 1 GNSS_EXT_LNA_EN_K OMIT
PP1619_K P2MM-NSM SM 1 PMU_TO_GNSS_EN OMIT
PP1620_K P2MM-NSM SM 1 UART_GNSS_TO_AP_RXD OMIT
PP1621_K P2MM-NSM SM 1 UART_AP_TO_GNSS_TXD OMIT
PP1622_K P2MM-NSM SM 1 UART_GNSS_TO_AP_CTS_L OMIT
PP1623_K P2MM-NSM SM 1 UART_AP_TO_GNSS_RTS_L OMIT
PP1624_K P2MM-NSM SM 1 AP_TO_BB_TIME_MARK OMIT
PP1625_K P2MM-NSM SM 1 GNSS_IF_TEST_OUT_K OMIT

DIGRF

PP1629_K P2MM-NSM SM 1 90_DIGRF_M1_TX_P_K OMIT
PP1630_K P2MM-NSM SM 1 90_DIGRF_M1_TX_N_K OMIT
PP1631_K P2MM-NSM SM 1 90_DIGRF_A1_RX1_P_K OMIT
PP1632_K P2MM-NSM SM 1 90_DIGRF_A1_RX1_N_K OMIT
PP1646_K P2MM-NSM SM 1 90_DIGRF_M0_TX_P_K OMIT
PP1647_K P2MM-NSM SM 1 90_DIGRF_M0_TX_N_K OMIT

BB UART

PP1643_K P2MM-NSM SM 1 UART_BB_TO_AP_RXD_K OMIT

PP1660_K P2MM-NSM SM 1 SWD_AOP_TO_MANY_SWCLK OMIT
PP1661_K P2MM-NSM SM 1 SWD_AOP_BI_BB_SWDIO OMIT

PCIE GND

PP1633_K P2MM-NSM SM 1 OMIT
PP1634_K P2MM-NSM SM 1 OMIT

DEBUG CONNECTOR

MLB 516S1185
FLEX 51681184

J_DEBUG_K 20-5857-036-001-829 F-ST-SM

PP_VDD_MAIN	37	38	
PMU_TO_BB_USB_VBUS_DETECT	1	2	90_USB_BB_DATA_P
NC	3	4	90_USB_BB_DATA_N
NC	5	6	VDD_SIM1_K
PMU_TO_BBPMU_RESET_L	7	8	SIM1_RST_R_K
PP1V8_S2	9	10	SIM1_CLK_R_K
BB_JTAG_TDO_K	11	12	SIM1_IO_R_K
BB_JTAG_TDI_K	13	14	SIM1_SWP_R_K
BB_JTAG_TRST_L_K	15	16	SIM1_DETECT_R_K
AP_TO_BB_RESET_L	17	18	NC
BB_JTAG_TCK_K	19	20	NC
BB_JTAG_TMS_K	21	22	NC
PP_VDD_MAIN	23	24	NC
NC	25	26	NC
UART_BB_TO_AP_RXD_K	27	28	NC
UART_AP_TO_BB_TXD_K	29	30	NC
PP_VDD_BOOST	31	32	UART_BB_TO_WLAN_COEX
	33	34	UART_WLAN_TO_BB_COEX
NC	35	36	NC
	39	40	
	42		

SELECT
BB_JTAG_RESET_L
NOSTUFF

PAGE TITLE	TEST POINTS & SIM
Apple Inc.	DRAWING NUMBER 051-02247 SIZE D
	REVISION 7.0.0
	BRANCH evt-1
	PAGE 16 OF 17
	SHEET 28 OF 34

NOTICE OF PROPRIETARY PROPERTY:
THE INFORMATION CONTAINED HEREIN IS THE PROPRIETARY PROPERTY OF APPLE INC.
THE POSESSOR AGREES TO THE FOLLOWING:
I TO MAINTAIN THIS DOCUMENT IN CONFIDENCE
II NOT TO REPRODUCE OR COPY IT
III NOT TO REVEAL OR PUBLISH IT IN WHOLE OR PART
IV ALL RIGHTS RESERVED

CONFIDENTIAL AND PROPRIETARY: APPLE SYSTEM DESIGN. FOR REFERENCE PURPOSE ONLY - NOT A CHANGE REQUEST

PDF Watermark Remover DEMO : Purchase from www.PDFWatermarkRemover.com to remove the watermark

RF CONNECTORS AND METROCIRC

LAT MLC

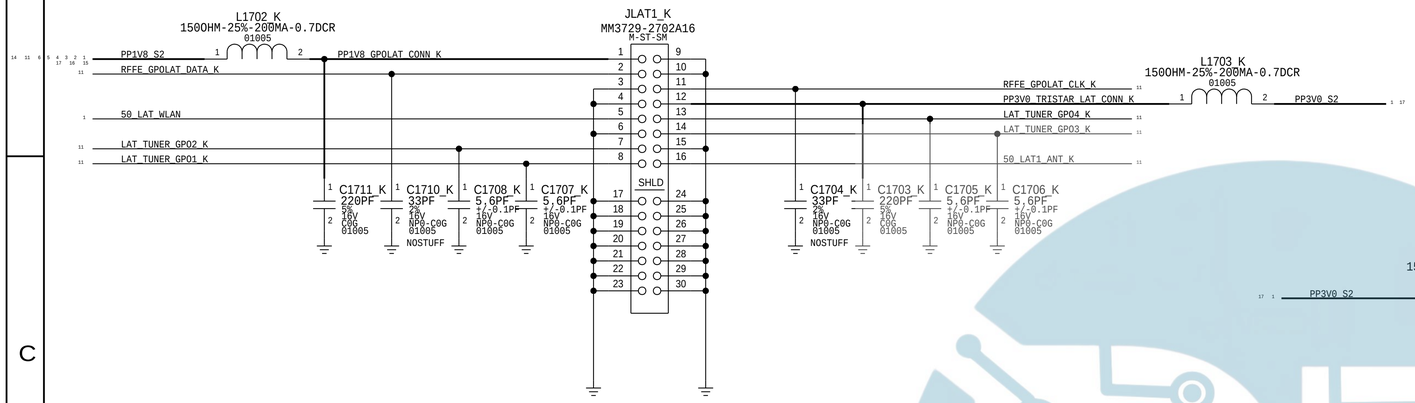

UAT1 MLC

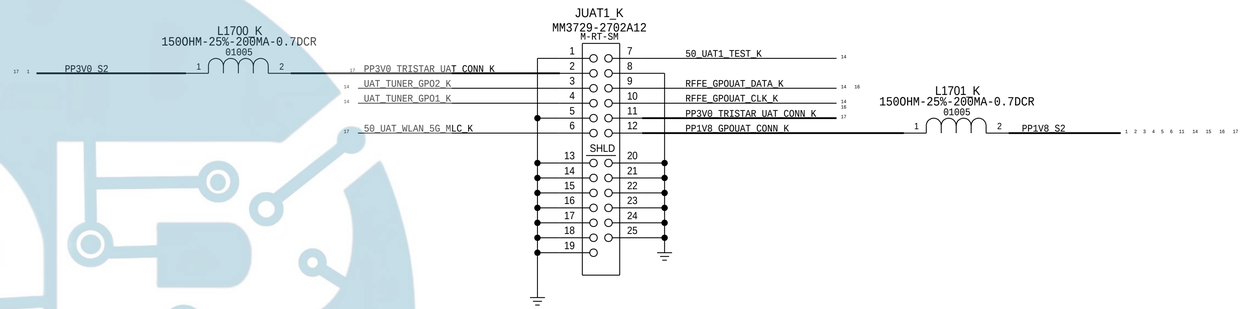

4-IN-1 METROCIRC CABLE

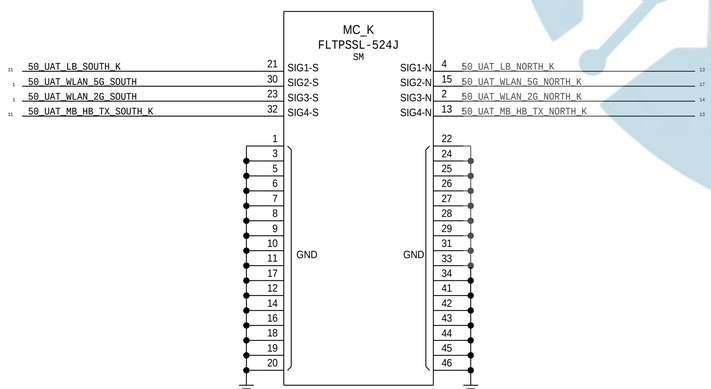

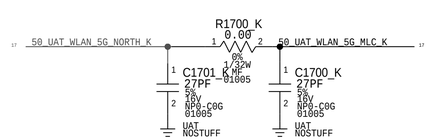

PDF Watermark Remover DEMO : Purchase from www.PDFWatermarkRemover.com to remove the watermark

1. ALL RESISTANCE VALUES ARE IN OHMS, 0.1 WATT +/- 5%.
2. ALL CAPACITANCE VALUES ARE IN MICROFARADS.
3. ALL CRYSTALS & OSCILLATOR VALUES ARE IN HERTZ.

REV	ECN	DESCRIPTION OF REVISION	CK APPD / DATE
7	0008448938	ENGINEERING RELEASED	2017-04-11

D22/D221 WIFI_MLB (GUINNESS)
APR 03, 2017

PDF PAGE	CSA PAGE	CONTENTS
2	76	GUINNESS
3	77	WIFI FRONT-END

POWER
31 12 IN PP_VDD_MAIN
31 12 IN PP1V8_S2

CLOCKS
31 12 IN PMU_TO_WLAN_CLK32K
31 12 IN WLAN_TO_AP_TIME_SYNC

CONTROL
31 12 IN PMU_TO_WLAN_REG_ON
31 12 IN PMU_TO_BT_REG_ON
31 12 OUT BT_TO_PMU_HOST_WAKE
31 12 IN AP_TO_BT_WAKE

WLAN PCIE
31 12 IN 90_PCIE_AP_TO_WLAN_REFCLK_P
31 12 IN 90_PCIE_AP_TO_WLAN_REFCLK_N
31 12 IN 90_PCIE_AP_TO_WLAN_TXD_P
31 12 IN 90_PCIE_AP_TO_WLAN_TXD_N
31 12 OUT 90_PCIE_WLAN_TO_AP_RXD_P
31 12 OUT 90_PCIE_WLAN_TO_AP_RXD_N
31 12 IN PCIE_AP_TO_WLAN_RESET_L
2 IO PCIE_WLAN_BT_AP_CLKREQ_L
31 12 OUT WLAN_TO_PMU_HOST_WAKE
31 12 IN AP_TO_WLAN_DEVICE_WAKE

WLAN UART
31 12 OUT UART_WLAN_TO_AP_RXD
31 12 IN UART_AP_TO_WLAN_TXD
31 12 OUT UART_WLAN_TO_AP_CTS_L
31 12 IN UART_AP_TO_WLAN_RTS_L

BLUETOOTH UART
31 12 IN UART_AP_TO_BT_TXD
31 12 OUT UART_BT_TO_AP_RXD
31 12 IN UART_AP_TO_BT_RTS_L
31 12 OUT UART_BT_TO_AP_CTS_L

AOP
31 12 IN AOP_TO_WLAN_CONTEXT_A
31 12 IN AOP_TO_WLAN_CONTEXT_B

COEX
31 12 IN UART_BB_TO_WLAN_COEX
31 12 OUT UART_WLAN_TO_BB_COEX

ANTENNA
3 IO 50_UAT_WLAN_2G_SOUTH
3 IO 50_UAT_WLAN_5G_SOUTH
3 IO 50_LAT_WLAN

SymbolPorts

DRAWING TITLE	SCH,MLB,BOT,X893
Apple Inc.	
DRAWING NUMBER	051-02247
SIZE	D
REVISION	7.0.0
BRANCH	evt-1
PAGE	1 OF 5
SHEET	30 OF 34

NOTICE OF PROPRIETARY PROPERTY:
THE INFORMATION CONTAINED HEREIN IS THE PROPRIETARY PROPERTY OF APPLE INC.
THE POSESSOR AGREES TO THE FOLLOWING:
I TO MAINTAIN THIS DOCUMENT IN CONFIDENCE
II NOT TO REPRODUCE OR COPY IT
III NOT TO REVEAL OR PUBLISH IT IN WHOLE OR PART
IV ALL RIGHTS RESERVED

CONFIDENTIAL AND PROPRIETARY APPLE SYSTEM DESIGN. FOR REFERENCE PURPOSE ONLY - NOT A CHANGE REQUEST

PDF Watermark Remover DEMO : Purchase from www.PDFWatermarkRemover.com to remove the watermark

WIFI/BT

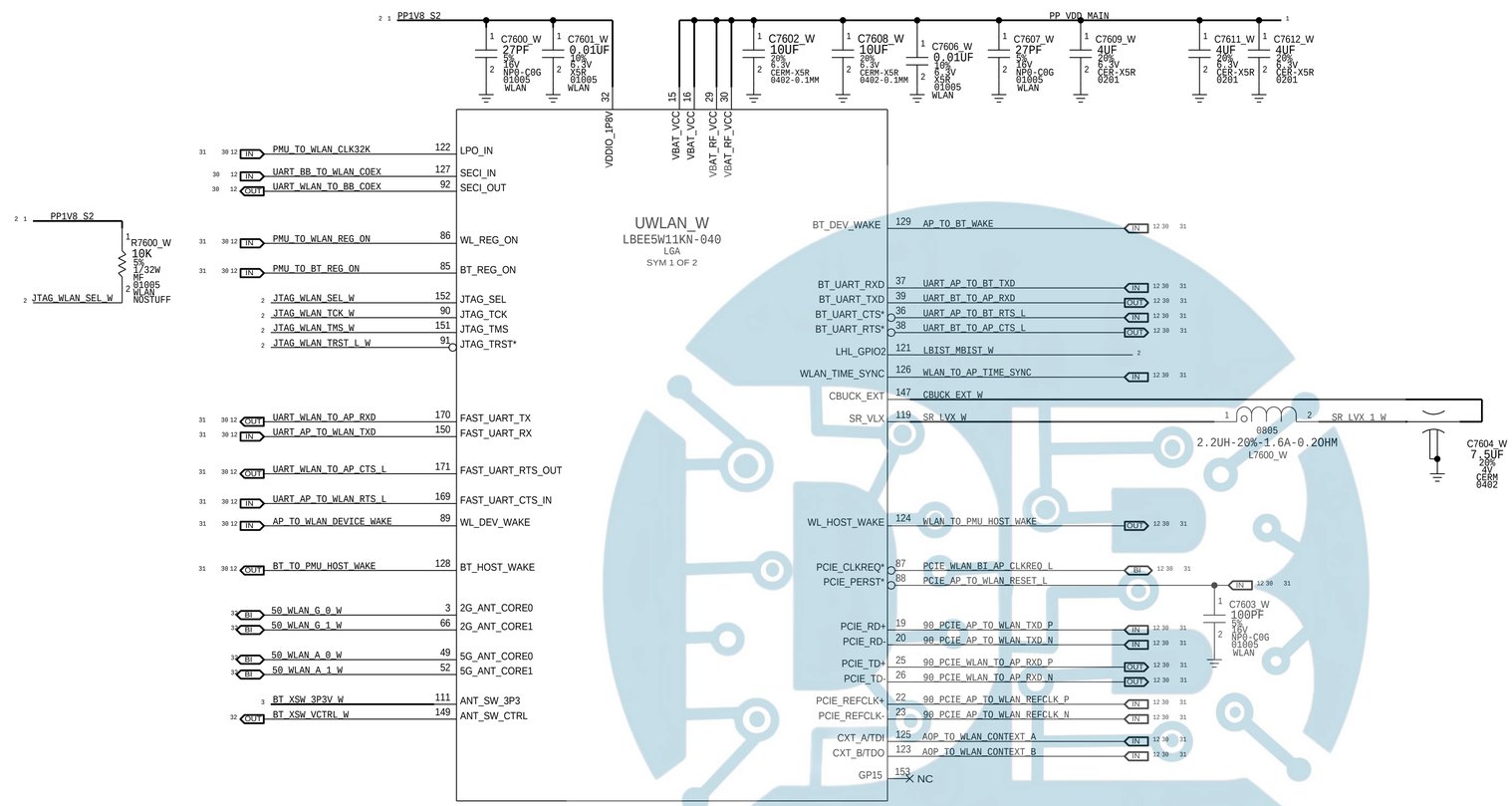

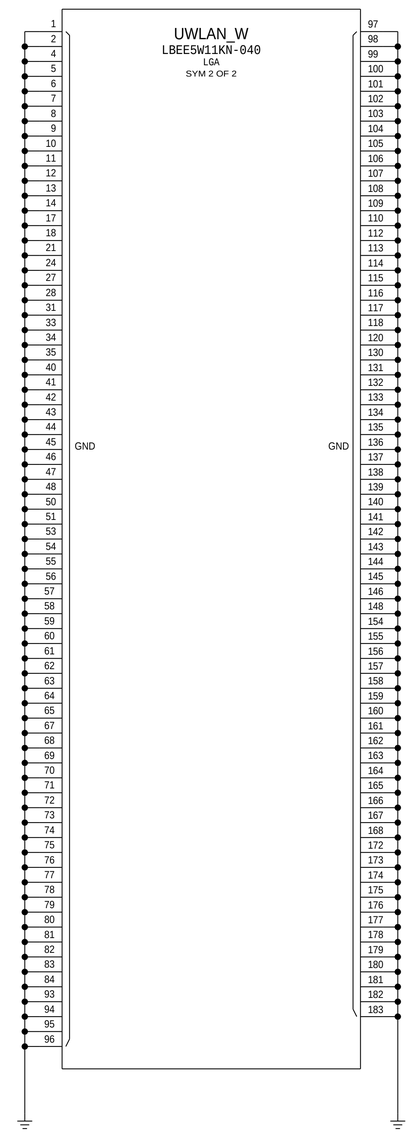

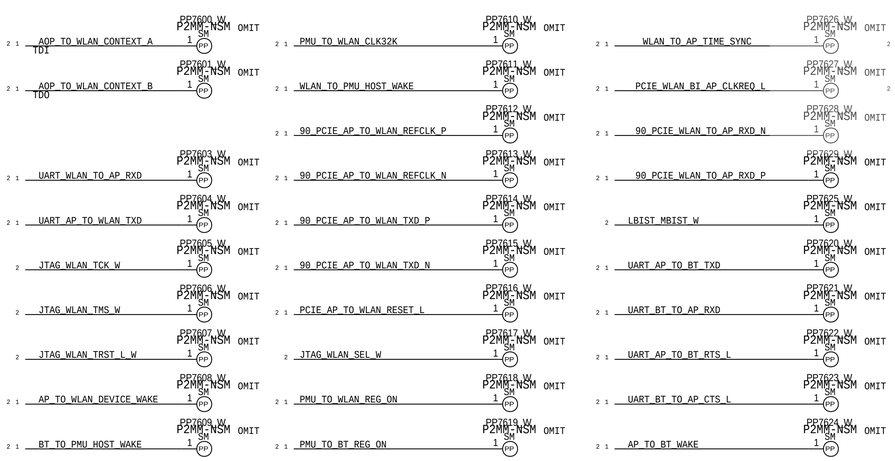

PART NUMBER	ALTERNATE FOR PART NUMBER	BOM OPTION	REF DES	COMMENTS:
998-10376	998-10147	BOM_TABLE_ALTS	UWLAN_W	USI ES6.1 WIFI MODULE

SYNC_MASTER=WIFI SYNC_DATE=01/30/2014

PAGE TITLE: Guinness

Apple Inc.

DRAWING NUMBER: 051-02247 SIZE: D

REVISION: 7.0.0

BRANCH: evt-1

PAGE: 4 OF 5

SHEET: 31 OF 34

NOTICE OF PROPRIETARY PROPERTY:
THE INFORMATION CONTAINED HEREIN IS THE PROPRIETARY PROPERTY OF APPLE INC.
THE POSESSOR AGREES TO THE FOLLOWING:
I TO MAINTAIN THIS DOCUMENT IN CONFIDENCE
II NOT TO REPRODUCE OR COPY IT
III NOT TO REVEAL OR PUBLISH IT IN WHOLE OR PART
IV ALL RIGHTS RESERVED

PDF Watermark Remover DEMO : Purchase from www.PDFWatermarkRemover.com to remove the watermark

WIFI LOWER ANTENNA FEED

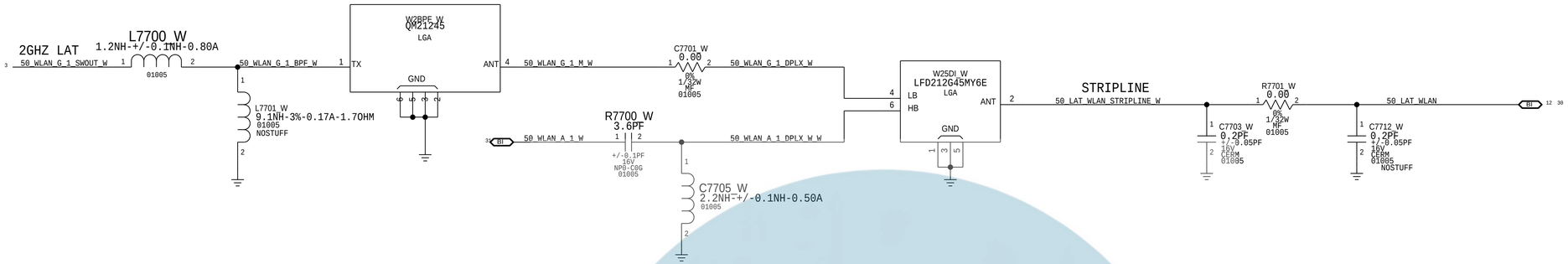

5GHZ WIFI UPPER ANTENNA FEED

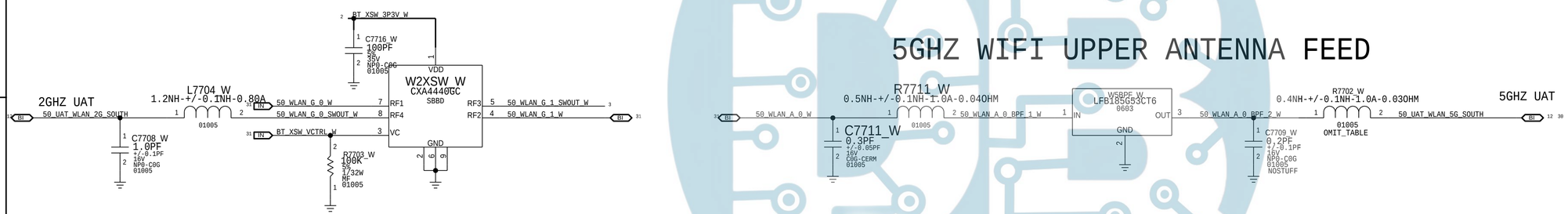

PART#	QTY	DESCRIPTION	REFERENCE DESIGNATOR(S)	CRITICAL	BOM OPTION
117S0161	1	5GHZ C0 BPF OUTPUT MATCH	R7702_W	CRITICAL	D221
152S00498	1	5GHZ C0 BPF OUTPUT MATCH	R7702_W	CRITICAL	ROW
152S00498	1	5GHZ C0 BPF OUTPUT MATCH	R7702_W	CRITICAL	JPN

PAGE TITLE: WiFiANTFeeds

Apple Inc.

DRAWING NUMBER: 051-02247 SIZE: D

REVISION: 7.0.0

BRANCH: evt-1

PAGE: 5 OF 5

SHEET: 32 OF 34

NOTICE OF PROPRIETARY PROPERTY:
THE INFORMATION CONTAINED HEREIN IS THE PROPRIETARY PROPERTY OF APPLE INC.
THE POSESSOR AGREES TO THE FOLLOWING:
I TO MAINTAIN THIS DOCUMENT IN CONFIDENCE
II NOT TO REPRODUCE OR COPY IT
III NOT TO REVEAL OR PUBLISH IT IN WHOLE OR PART
IV ALL RIGHTS RESERVED

PDF Watermark Remover DEMO : Purchase from www.PDFWatermarkRemover.com to remove the watermark

1. ALL RESISTANCE VALUES ARE IN OHMS, 0.1 WATT +/- 5%.
2. ALL CAPACITANCE VALUES ARE IN MICROFARADS.
3. ALL CRYSTALS & OSCILLATOR VALUES ARE IN HERTZ.

REV	ECN	DESCRIPTION OF REVISION	CK APPD / DATE
7	0008448938	ENGINEERING RELEASED	2017-04-11

D22 NFC_MLB
MARCH 22, 2017

34 12	IN	PP_VDD_MAIN	
34 12	IN	PP1V8_S2	
34 12	IN	PMU_TO_NFC_EN	
34 12	OUT	NFC_TO_PMU_HOST_WAKE	
34 12	IN	AP_TO_NFC_DEV_WAKE	
34 12	IN	AP_TO_NFC_FW_DWLD_REQ	
34 12	OUT	NFC_TO_BB_CLK_REQ	
34 12	IN	BB_TO_NFC_CLK	
34	IN	NFC_DWP_TX_TP_S	
34 12	IN	UART_AP_TO_NFC_TXD	
34 12	OUT	UART_NFC_TO_AP_RXD	
34 12	IN	UART_AP_TO_NFC_RTS_L	
34 12	OUT	UART_NFC_TO_AP_CTS_L	
34 12	IO	NFC_SWP1	

PART#	QTY	DESCRIPTION	REFERENCE DESIGNATOR(S)	CRITICAL	BOM OPTION
138S00159	3	CAP,SOFT-TERM,2.2UF,6.3V,0201	C7500_S,C7502_S,C7505_S	CRITICAL	SOFT_CAP
138S0831	3	CAP,TYPICAL,2.2UF,6.3V,0201	C7500_S,C7502_S,C7505_S	CRITICAL	TYPICAL_CAP

page1

DRAWING TITLE: SCH,MLB,BOT,X893

Apple Inc.

DRAWING NUMBER: 051-02247 SIZE: D

REVISION: 7.0.0

BRANCH: evt-1

PAGE: 1 OF 75

SHEET: 33 OF 34

NOTICE OF PROPRIETARY PROPERTY:
THE INFORMATION CONTAINED HEREIN IS THE PROPRIETARY PROPERTY OF APPLE INC.
THE POSESSOR AGREES TO THE FOLLOWING:
I TO MAINTAIN THIS DOCUMENT IN CONFIDENCE
II NOT TO REPRODUCE OR COPY IT
III NOT TO REVEAL OR PUBLISH IT IN WHOLE OR PART
IV ALL RIGHTS RESERVED

PDF Watermark Remover DEMO : Purchase from www.PDFWatermarkRemover.com to remove the watermark

STOCKHOLM

5V BOOSTER

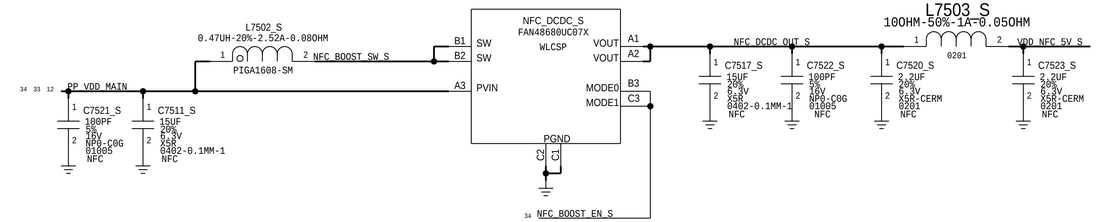

NFC CONTROLLER

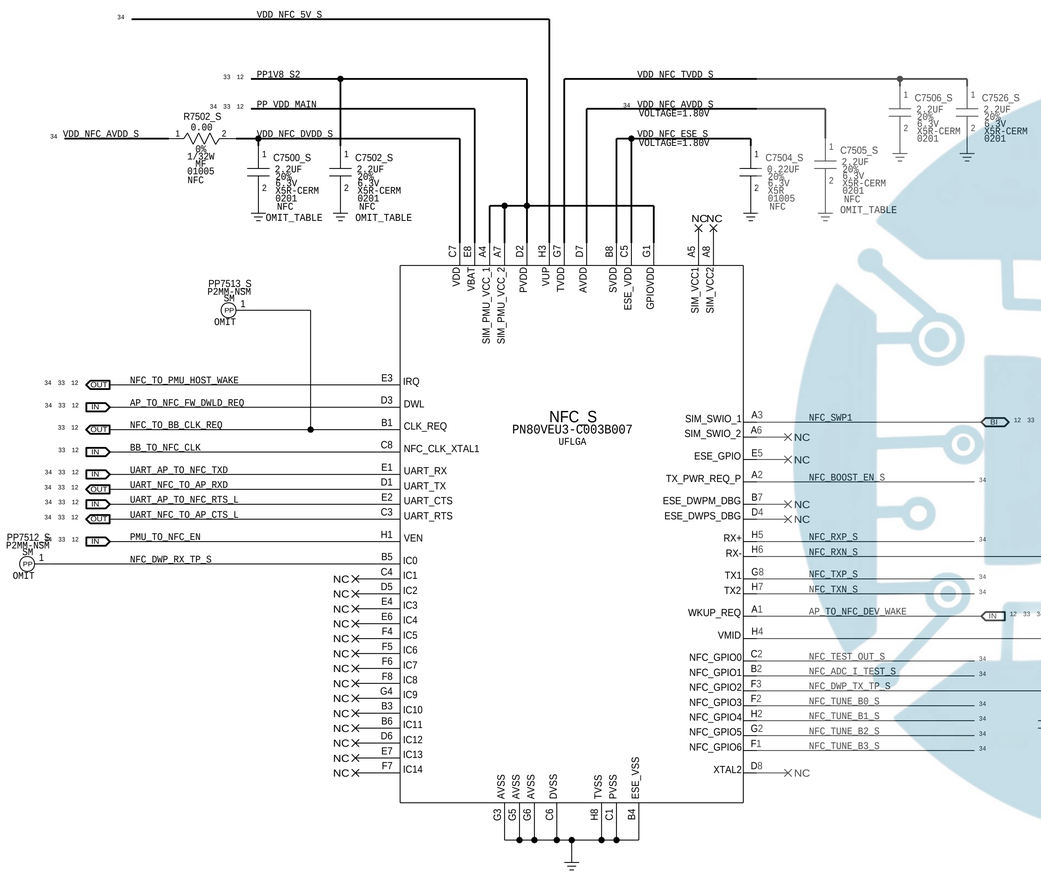

NFC FRONT END

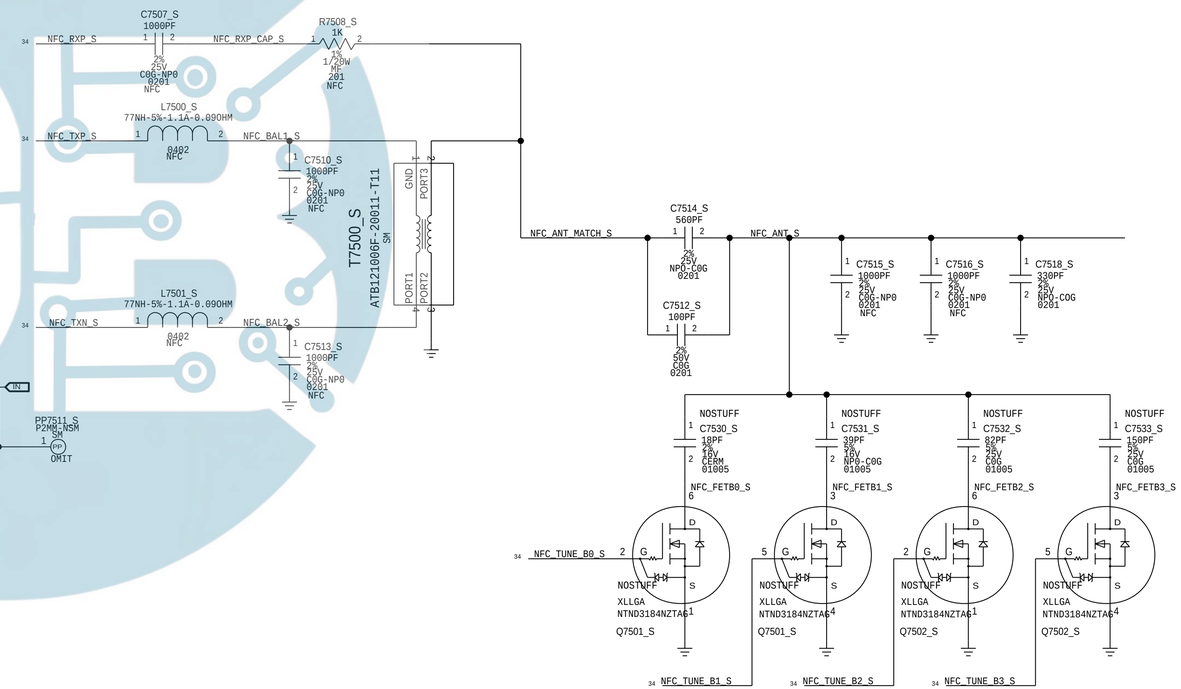

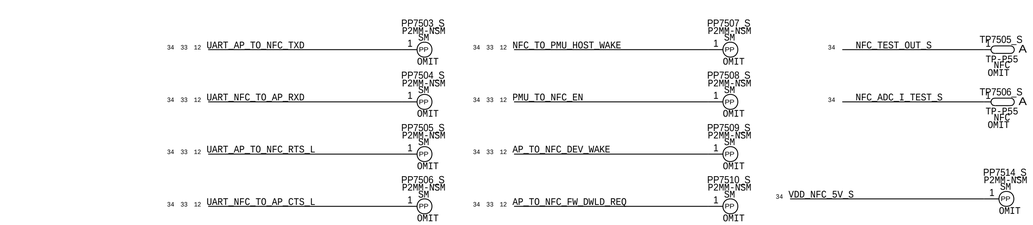

PAGE TITLE	NFC
Apple Inc.	DRAWING NUMBER 051-02247 SIZE D
	REVISION 7.0.0
	BRANCH evt-1
	PAGE 75 OF 75
	SHEET 34 OF 34

NOTICE OF PROPRIETARY PROPERTY:
THE INFORMATION CONTAINED HEREIN IS THE PROPRIETARY PROPERTY OF APPLE INC. THE POSESSOR AGREES TO THE FOLLOWING:
I TO MAINTAIN THIS DOCUMENT IN CONFIDENCE
II NOT TO REPRODUCE OR COPY IT
III NOT TO REVEAL OR PUBLISH IT IN WHOLE OR PART
IV ALL RIGHTS RESERVED

PDF Watermark Remover DEMO : Purchase from www.PDFWatermarkRemover.com to remove the watermark