REVISION RECORD			
LTR	ECO NO:	APPROVED:	DATE:

20191220-B

V0.1 Delete SMB1355
change RT2801 to RT3202

20200102

°ÏÈëÉã£µ¸ü¸Å

20200104

1¡€Ô0¾ÓT CardµÇÔ´¹©µç

2¡€Ô0¾ÓDRDI0£¬DRDI1ÍøÅç

3¡€Ô0¾ÓCAM1£¬CAM3- PWDN

20200106

1¡€Ð Þ¸ÅÇ°£ã

2¡€Ð Þ¸ÅBoard_ID

3¡€Ð Þ¸ÅP/LSesor·ã×°

4¡€Ó¤ÅÔÈýÉãÉÁ¹ãµ£

5¡€µ÷ÕûHACÊ¹ÃÛ£¬Ô0¾ÓÎì ÎßtunnerBPI

6¡€¸üÐÅQCM6308·ã×°

20200107

1¡€C3501Ð Þ¸ÅÎª2.2UF£¬C3500-100nF£¬U3500µÅ12pin½ÓVREG_L9A_1P8

2¡€R3512Ë¥µõNC

3¡€SNS_I3C_SCL£¬SNS_I3C_SDAÐ Þ¸ÅÎªSNS_I2C_SDA£¬SNS_I2C_SDA

4¡€J5601 23PIN ÓÉGND¸ÅÎªVREG_L9A_1P8

5¡€RT3202¸ÅÎª NC£¬R5601¸ÅÎª NC£¬R5600¸ÅÎª0Ω·

6¡€R1603£¬R1604Ë¥µõNC

7¡€L5000£¬L5002£¬L5003£¬L5004½»»»ÍøÅç

8¡€TP5500£¬TP5501£¬TP5502£¬TP5504£¬TP5503£¬TP5722£¬TP5721¸ÅÎª1.0mm

9¡€P61£¬P66 Ëã£µ¸ü¸Å

20200108

1¡€RT3202Ë¥µõNC

2¡€Ð Þ¸ÅPL_I2C

3¡€R3512¸ÅÎª0Ω·

4¡€Ô0¾ÓT5001,T5002,T5003,T5004,T5005,R5001

5.¸ü¸ÅÉã£µP60£¬P61

6.Ô0¾ÓR5608£¬R5609

7.Ë¥µõ÷°ôÊãEMI

20200109

1¡€¸ü¸ÅJ5101µÛ3pinÍøÅç

2¡€Ô0¾ÓR5106£¬¼æÈÝÔ¸ÎÊ1.8V

3¡€¸ü¸ÅGPIO83_BOARD1£¬GPIO85_BOARD2ÍøÅç

202001010

1¡€NCÊºU5102£¬C5121£¬R5125£»R5106-0R

2¡€Ô0¾ÓNFC

3¡€¸ü¸ÅSIM¿¨·ã×°

4¡€Ô0¾ÓR6715£¬R6716

202001011

1¡€¼æÈÝAW87318

202001013

1¡€RFÐ Þ¸Ã

2¡€Ð Þ¸ÅNFCµ¯£¬

3¡€¸ü¸ÅSIM¿¨

202001014

1¡€Ô0¾ÓÊºC4118Ê»Ê¼³ý£ºT6700

2¡€¸ü¸Å·Ô¼¯£¬WCNÌ ìÎßµ¯£¬

3¡€¸ü¸ÅWTR3925

202001015

1¡€Ô0¾ÓÊºC7527Ê¬T5416Ê¬C7103

2¡€¸ü¸ÅÉÁ¹ãµ£·ã×°

3¡€É¼³ýWIFI-5GÉãÉµ²âÊÔ×ù

4¡€C4201,C4217¸ÅÎª0402·ã×°

5¡€É¼³ýTuner¿ØÖÆ¼æÈÝ

6¡€¸ü¸ÅJ6401

202001016

1¡€É¼³ýK8¼æÈÝPA

2¡€Ô0¾ÓR4001

3¡€C4219¸ÅÎª470NF

4¡€Ô0¾ÓC4118

202001017

1¡€C2001Ê¬C2507Ê¬C2706¸ÅÎª0402·ã×°

2¡€R4000,R4002¸ÅÎª0201·ã×°

3¡€Ô0¾ÓR4206-R4212,C4221

4¡€¸ü¸Å¶¯»ú×ùJ4001·ã×°

202001019

1¡€¸ü¸ÅGPS/WIFIñî°Ï£÷·ã×°ÍøÅç

2¡€¸ü¸ÅR4000Ê¬R4002·ã×°

3¡€É¼³ýC4118Ê¬C4104¸ÅÎª0402·ã×°

4¡€Ô0¾ÓR7109

5¡€¸ü¸ÅÌì Îßµ¯£¬·ã×°

6¡€¸ü¸ÅT4005Í»ÔÅ

20200121

1¡€¸ü¸ÅCamera ²¿·ÔPWDN¼æÈÝ

2¡€Add R5602,R3513,R3514,R3515,R3516

3¡€¸ü¸ÅU3501 I2C¼Ó¿ÚÔëL/P Sensor ¹²ÔÅ

V0.2 20200121

1¡€¸ü¸ÅSim ¿¨Ô»Ò³

V0.2 20200123

1¡€RF¸ü¸Å12£¬60£¬61£¬62£¬63£¬64£¬65£¬66Ô³

V0.2 20200202

Change R2209 Value to 22K 1%,,Change U6601.1;U6601.3 Pin net
Delete R7115,R7116

Change EBOM R5600 Value 10m¦¸

V0.2 20200203

1¡€RF¸ü¸Å61Ô³

V0.2 20200205

1¡€Change U3500.10,11PIN to NC ,change U6600,U6601 NET

1¡€Change U1000.AG4 NET

V0.2 20200205-B

Add C6121,C6123,C6124

V0.2 20200208
add R5213,add net CAM_2MD_GPIO__ID
change net SCAM_VCM_2P8_EN to AH22 pin GPIO103

Change Camera 2M Depth 13pin ,14PIN

V0.2 20200208-B

Delete T5303

V0.2 20200209

change J5201 25,26PIN to NC

V0.2 20200209-NFC

add U7501,R7501

V0.2 202002010
Change R5125 Value to 0ohm

V0.2 202002010-B

Change J5401,J5402,J5403,J5404 Part

V0.2 202002010-C

add T2501

V0.2-20200211
Change L2501 Part and Change R5411 Value

V0.2-20200211-B
Change C2305,C2104 Part

V0.2-20200212
add C6130,L6130

V0.2-20200212-B
Add SC5709,change S5709 to SB5709

V0.2-20200212-C
change R4205 to Part 0402
add C1370

V0.3-20200214

change C1370 Value to 2.2uf

V0.3-20200214-B

change C1312,C1314 Part to 0402,Delete R1301

V0.3-20200215
add C1371

V0.3-20200218
change C4219 Part to C0201

V0.3-20200218A

Delete TP5401£¬EBOM NC£°T5617

V0.3-20200218B

add C1372,C1373-1uf;C1374,C1375-100nf

V0.3-20200219

Del C1374

V0.3-20200219A

add TP5212-TP5215

V0.3-20200221

change RF WCN

V0.3-20200221A

Add U5602 C5605 C5603 C5614 B5601 B5602 R5612 R5613 R5614 R5621

V0.3-20200222

add C1376£¬C1377

Del C1371£-C1372

V0.3-20200224A

Mod FL7102

V0.3-20200225

Mod E7500£¬E7501 Decals

V0.3-20200226

Mod C1376-1UF£-C1375-1UF

V0.3-20200229

Del C1377

V0.3-20200303

Add C1377

V0.3-20200304

Delete R7505,R7513,R7514,R7516,

Delete R6011,R6012,Value to NC

Change R5007 Part and Value to 4.7¦¸/0201,

Add R5023,R5024,C5023,Q5001

Add C7122

C1373-2.2uf£-C1310-470nf£-C1376-10nf

Delete C4107,Add C4149,R4124,R4125,R4134,Change U4101 Part,

Add U4102

V0.3-20200305-D

Add C1378-470NF

Del C1373

Mod C1375-100nF

change C4102 to 1uf,C4103 to 1uf

Delete C4108

add R6420,delete T6400

Mod C1375-1UF

V0.3-20200306

V0.3-20200306

change C1378 to 470nf

V0.4-20200311

change R5213 to NC

V0.4-20200317

add U6703,C6714, ,C6716 change R6708 to 1K

V0.4-20200319

change u3500 PART

V0.41-20200321

add R7120,L6408

V0.41-20200325

RF update 5G WIFI, B40 PRX, GPS

Z6207 ¯ÔB41¸ÅÎª B40 RX SAW

ADD FL7104 , L7115 ,L7116

È¥µõL6200 ,R6200

ADD R6204,R6205

Add L2502

V0.5-20200416

Delete R5213

Delete L2501,Add L2502

change C4149 Value to 10uf/0603

V0.5-20200416-C

Add C5621

V0.5-20200416-D

change R5612,R5621 Parttype to0402, Change c2504 Decal

V0.5-20200417

Add C6412 C6413

DRAWN: jack.yi	DATED: 20200416
CHECKED: <Checked By>	DATED: <Checked Date>
QUALITY CONTROL: <QC By>	DATED: <QC Date>
RELEASED: <Released By>	DATED: <Release Date>

COMPANY: <Company Name>				
TITLE: SM6115				
CODE: P370AE	SIZE: D	DRAWING NO: P370AE		REV: V0.5
SCALE: <Scale>			SHEET: 46	

REVISION RECORD			
LTR	ECO NO:	APPROVED:	DATE:

U1000-A

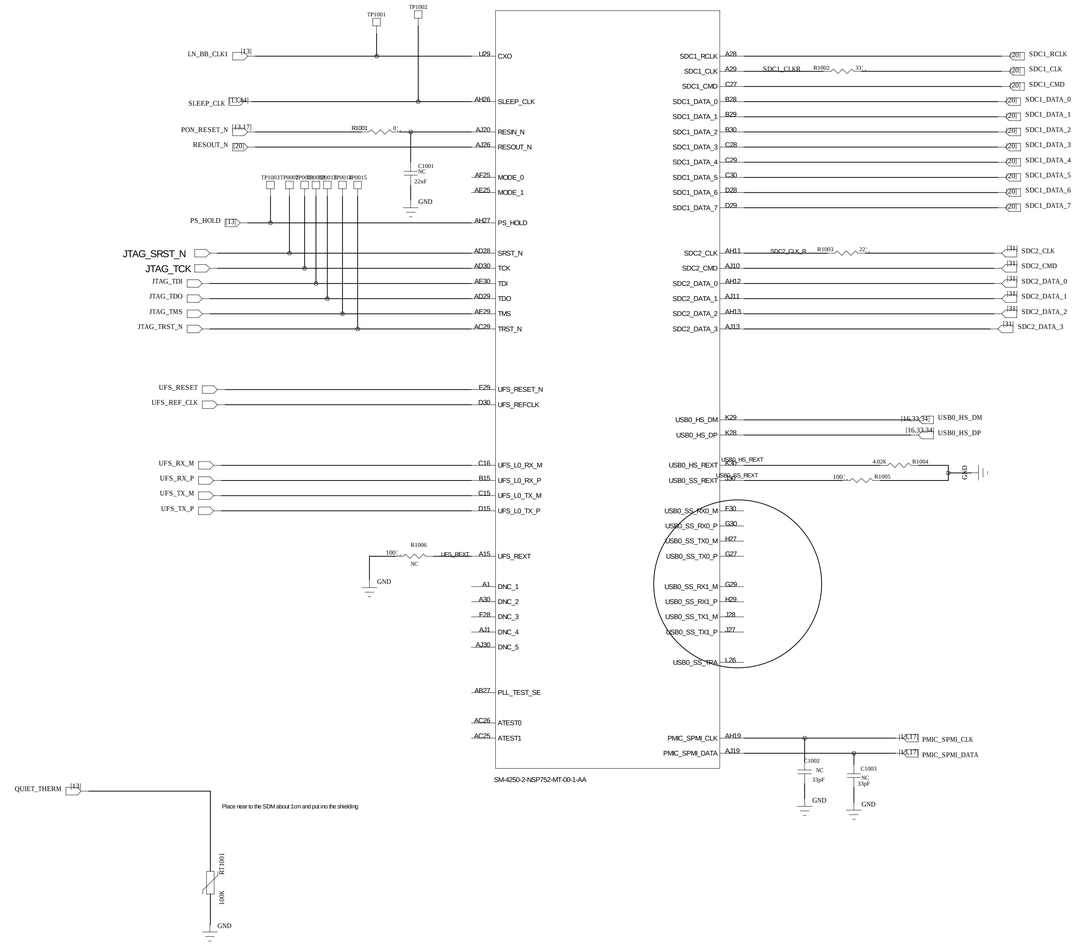

DRAWN: jack.yi	DATED: 20200416	COMPANY: <Company Name>	
CHECKED: <Checked By>	DATED: <Checked Date>	TITLE: SM6115	
QUALITY CONTROL: <QC By>	DATED: <QC Date>	CODE: P370AE	SIZE: D
RELEASED: <Released By>	DATED: <Release Date>	DRAWING NO: P370AE	REV: V0.5
		SCALE: <Scale>	SHEET: 3 OF 46

REVISION RECORD			
LTR	ECO NO:	APPROVED:	DATE:

A INITIAL RELEASE

EG08-SM4250-000

U1000-J

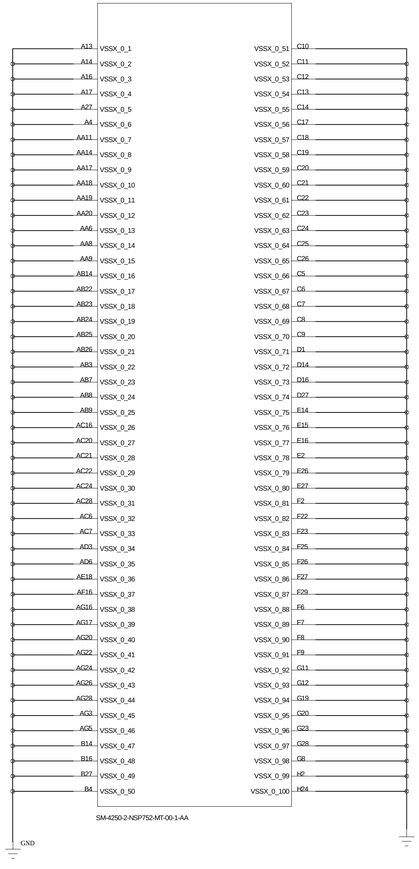

EG08-SM4250-000

U1000-L

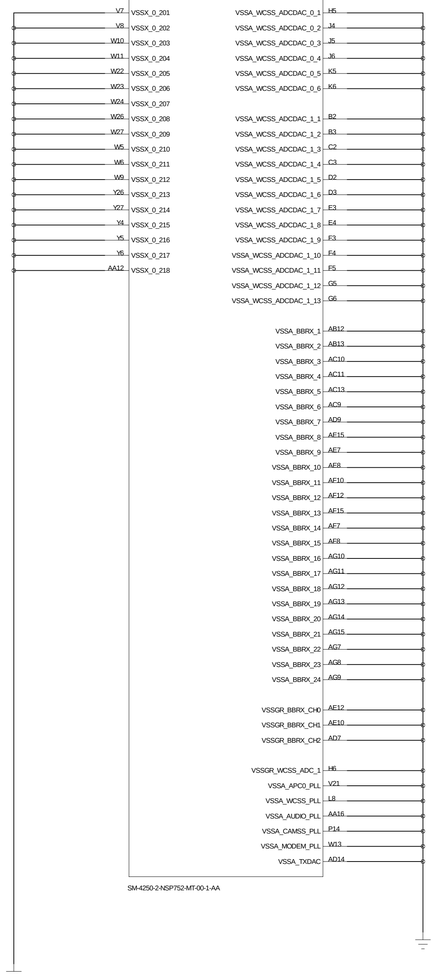

A INITIAL RELEASE

EG08-SM4250-000

U1000-K

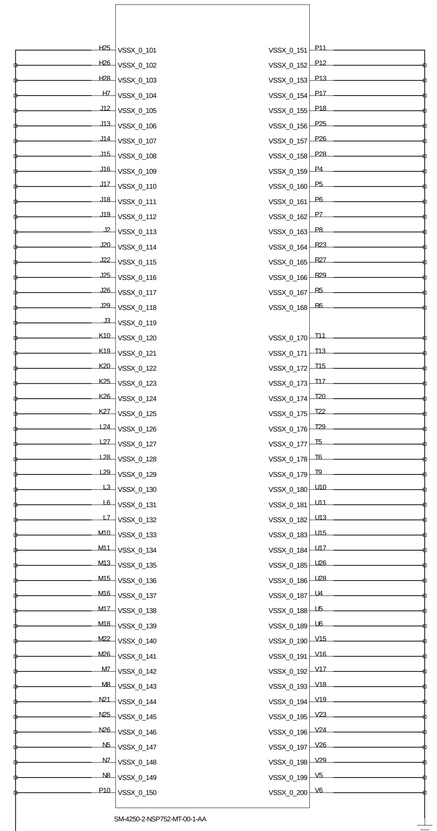

DRAWN: jack.yi	DATED: 20200416	COMPANY: <Company Name>	
CHECKED: <Checked By>	DATED: <Checked Date>	TITLE: SM6115	
QUALITY CONTROL: <QC By>	DATED: <QC Date>	CODE: P370AE	SIZE: D
RELEASED: <Released By>	DATED: <Release Date>	DRAWING NO: P370AE	REV: V0.5
		SCALE: <Scale>	SHEET: 3 OF 46

REVISION RECORD			
LTR	ECO NO:	APPROVED:	DATE:

U1000-B

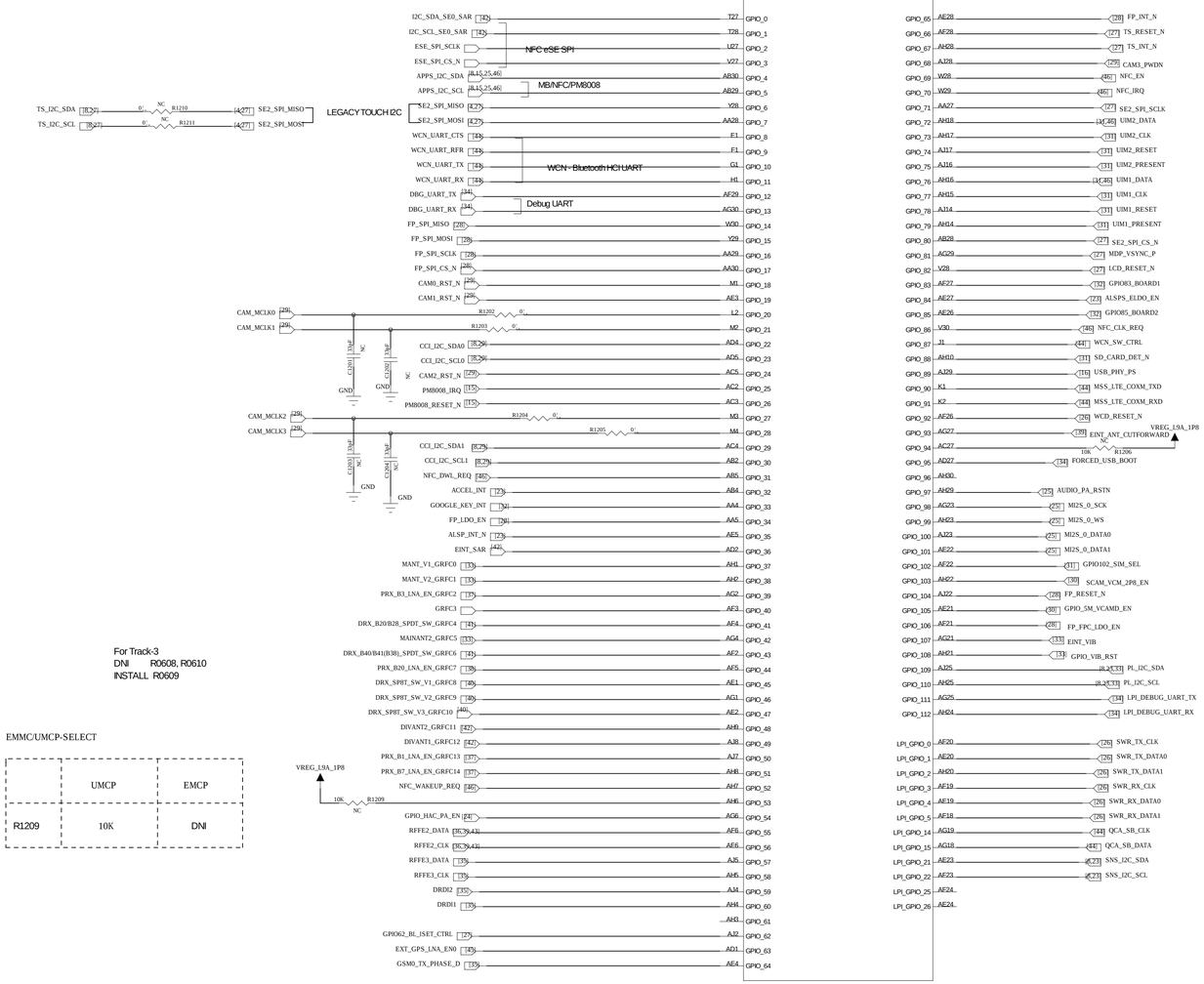

For Track-3
DNI R0608, R0610
INSTALL R0609

EMMC/UMCP-SELECT

	UMCP	EMCP
R1209	10K	DNI

BOOT CONFIG GPIOs	FUNCTIONALITY
GPIO_95	FORCED_USB_BOOT
BOOT_CONFIG[0]: GPIO_48	WDOG_DISABLE
BOOT_CONFIG[1]: GPIO_50	FASTBOOT_SEL[0]
BOOT_CONFIG[2]: GPIO_51	FASTBOOT_SEL[1]
BOOT_CONFIG[3]: GPIO_53	FASTBOOT_SEL[2]
BOOT_CONFIG[4]: GPIO_55	FASTBOOT_SEL[3]
GPIO_94	FORCED_USB_BOOT_POL_SEL

FASTBOOT_SEL[3:0]	BOOT OPTIONS
0b0000	0: Default (eMMC -> SD -> eDL (eDL path- USB only)
0b0001	1: SD -> eMMC-> eDL (eDL path USB only)
0b0010	2: SD -> eDL (eDL path- USB only)
0b0011	3: USB -> eDL (eDL path- SD then USB)
0b0100	5: UFS HS G1 -> SD -> eDL (eDL path- USB only)
0b0101	4: SD -> UFS HS G1 -> eDL (eDL path USB only)
0b1100	6: UFS HS G1 -> eDL (eDL path- USB only)
0b0111	7: eMMC -> SD -> eDL(eDL path-USB only)
0b1000	8: eMMC -> eDL (eDL path – USB only)

COMPANY: <Company Name>			
TITLE: SM6115			
DRAWN: jack.yi	DATED: 20200416		
CHECKED: <Checked By>	DATED: <Checked Date>	CODE: P370AE	SIZE: D
QUALITY CONTROL: <QC By>	DATED: <QC Date>	DRAWING NO: P370AE	REV: V0.5
RELEASED: <Released By>	DATED: <Release Date>	SCALE: <Scale>	SHEET: 46 of 46

REVISION RECORD			
LTR	ECO NO:	APPROVED:	DATE:

INITIAL RELEASE

U1000-H

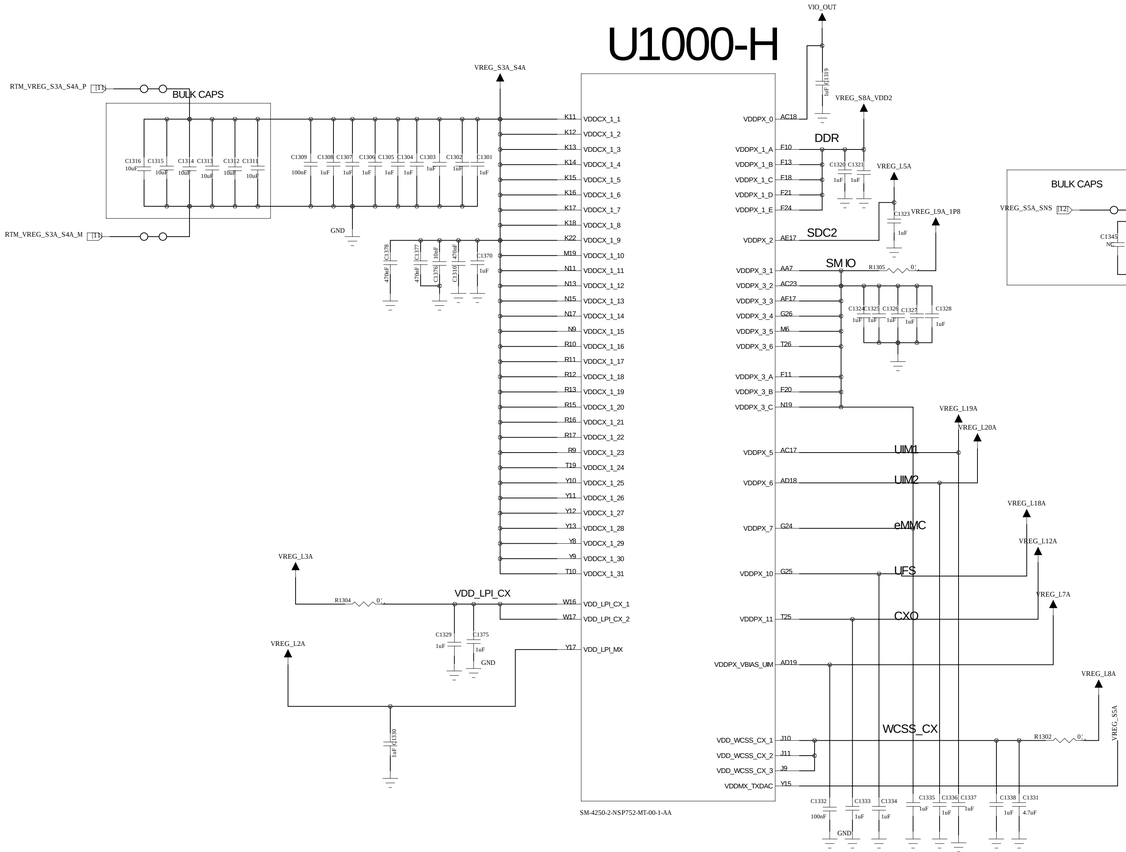

EG08-SM4250-000
U1000-G

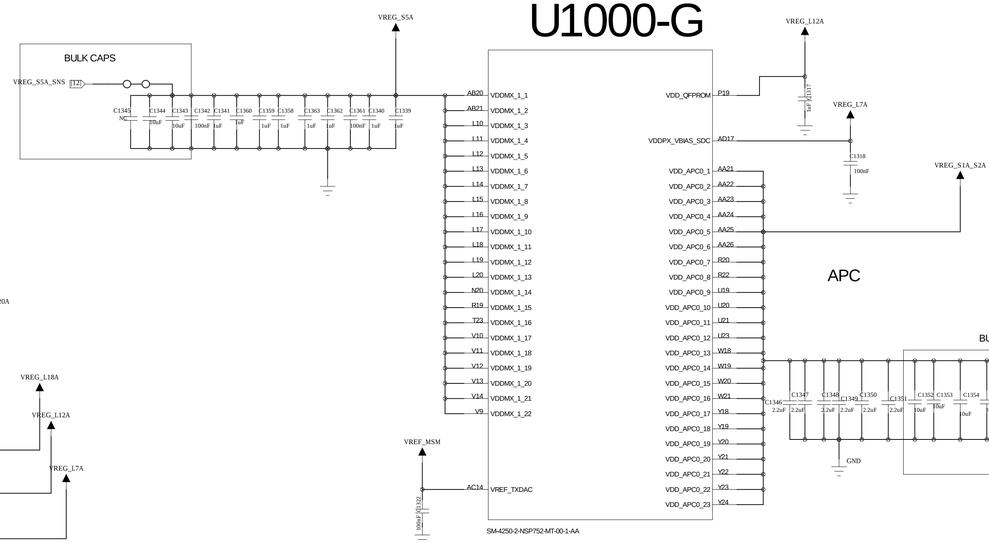

DRAWN: jack.yi	DATED: 20200416	COMPANY: <Company Name>	
CHECKED: <Checked By>	DATED: <Checked Date>	TITLE: SM6115	
QUALITY CONTROL: <QC By>	DATED: <QC Date>	CODE: P370AE	SIZE: D
RELEASED: <Released By>	DATED: <Release Date>	DRAWING NO: P370AE	REV: V0.5
		SCALE: <Scale>	SHEET: 5F 46

REVISION RECORD			
LTR	ECO NO:	APPROVED:	DATE:

EG08-SM4250-000

U1000-I

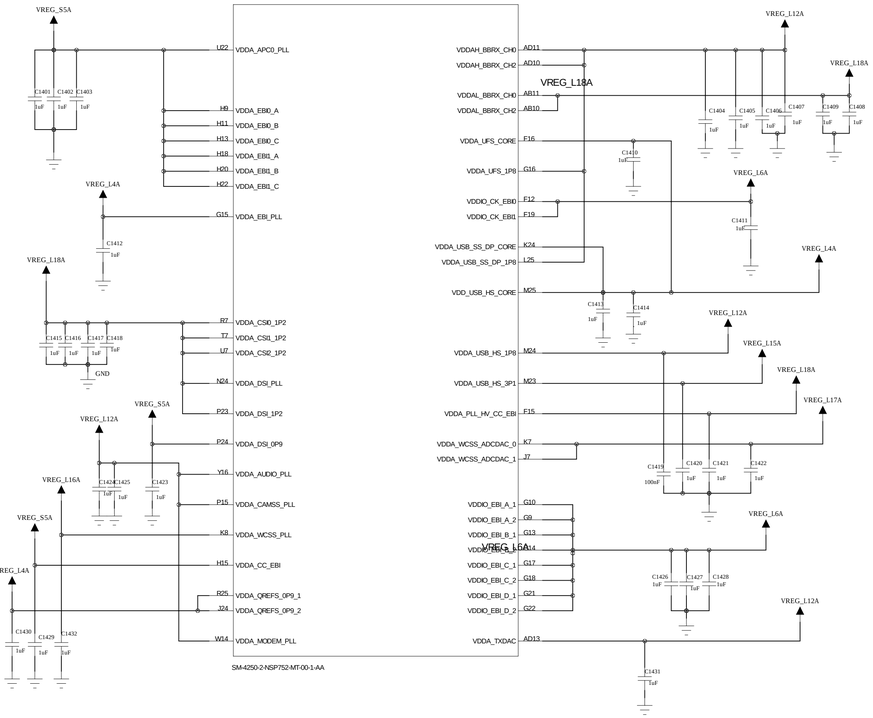

SDM670 GPIO

DRAWN: jack.yi	DATED: 20200416	COMPANY: <Company Name>	
CHECKED: <Checked By>	DATED: <Checked Date>	TITLE: SM6115	
QUALITY CONTROL: <QC By>	DATED: <QC Date>	CODE: P370AE	SIZE: D
RELEASED: <Released By>	DATED: <Release Date>	DRAWING NO: P370AE	REV: V0.5
		SCALE: <Scale>	SHEET: 6 OF 46

REVISION RECORD			
LTR	ECO NO:	APPROVED:	DATE:

EG08-SM4250-000

U1000-C

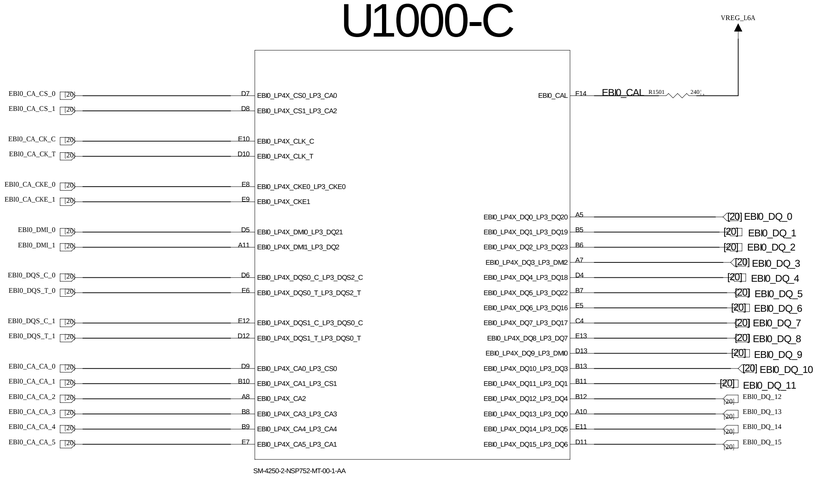

EG08-SM4250-000

U1000-D

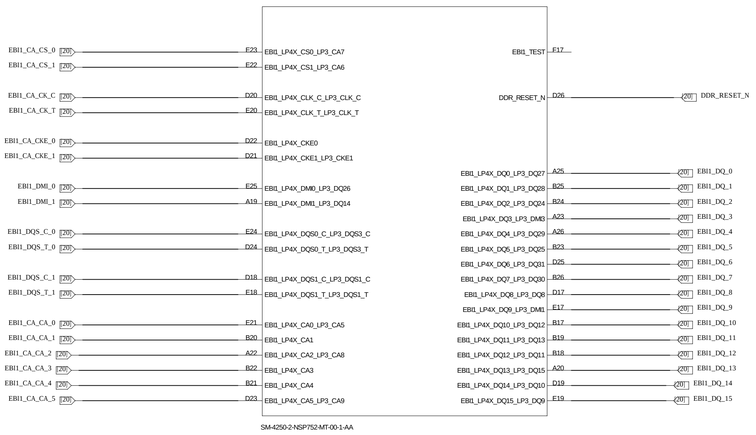

DRAWN: jack.yi	DATED: 20200416	COMPANY: <Company Name>	
CHECKED: <Checked By>	DATED: <Checked Date>	TITLE: SM6115	
QUALITY CONTROL: <QC By>	DATED: <QC Date>	CODE: P370AE / SIZE: D / DRAWING NO: P370AE / REV: V0.5	
RELEASED: <Released By>	DATED: <Release Date>	SCALE: <Scale>	SHEET: 46

REVISION RECORD			
LTR	ECO NO:	APPROVED:	DATE:

I2C BUS PULL-UPs

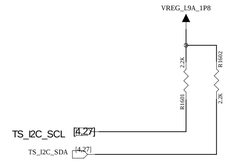

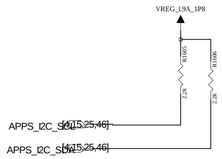

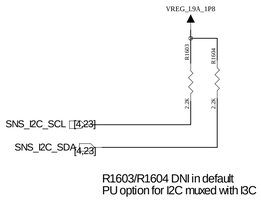

R1603/R1604 DNI in default
PU option for I2C muxed with I3C

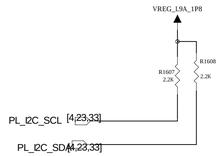

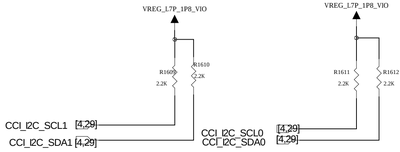

DRAWN: jack.yi	DATED: 20200416	COMPANY: <Company Name>			
		TITLE: SM6115			
CHECKED: <Checked By>	DATED: <Checked Date>	CODE: P370AE	SIZE: D	DRAWING NO: P370AE	REV: V0.5
QUALITY CONTROL: <QC By>	DATED: <QC Date>				
RELEASED: <Released By>	DATED: <Release Date>	SCALE: <Scale>		SHEET: 8 OF 46	

REVISION RECORD			
LTR	ECO NO:	APPROVED:	DATE:

EG08-SM4250-000

U1000-E

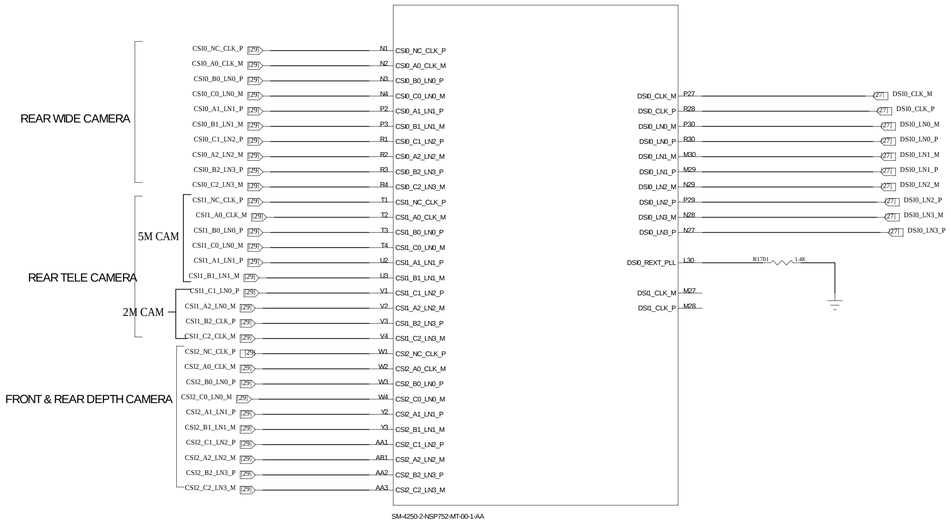

SDM670 EBIO

DRAWN: jack.yi	DATED: 20200416	COMPANY: <Company Name>	
CHECKED: <Checked By>	DATED: <Checked Date>	TITLE: SM6115	
QUALITY CONTROL: <QC By>	DATED: <QC Date>	CODE: P370AE / SIZE: D / DRAWING NO: P370AE / REV: V0.5	
RELEASED: <Released By>	DATED: <Release Date>	SCALE: <Scale>	SHEET: 9 OF 46

REVISION RECORD			
LTR	ECO NO:	APPROVED:	DATE:

EG08-SM4250-000

U1000-F

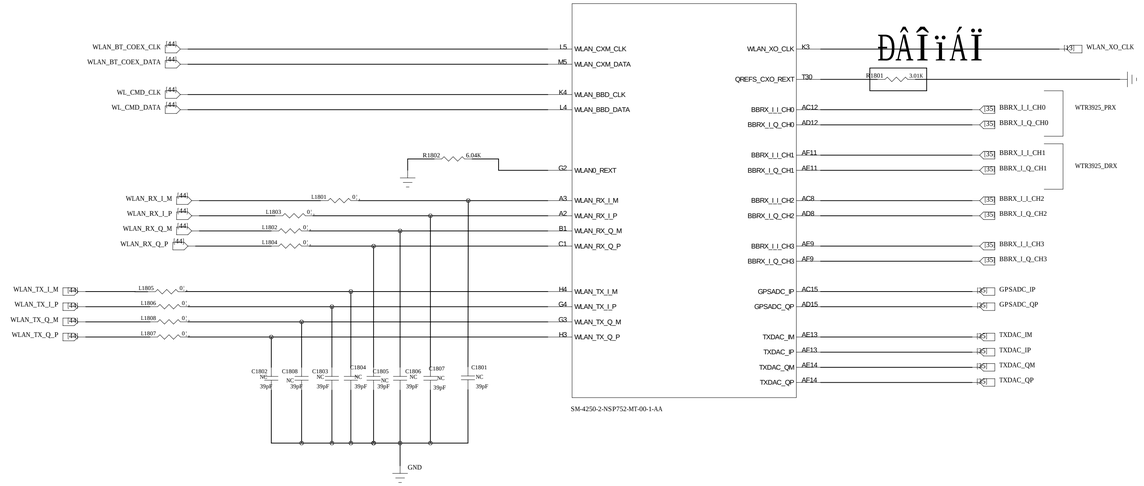

- 01005 size for LC filter is due to space limitation,usually 0201 is recommended.
- LC filter is for reducing ADC Sampling CLK harmonics in order to improve BDS performance when gLNA is used.

DRAWN: jack.yi	DATED: 20200416	COMPANY: <Company Name>			
CHECKED: <Checked By>	DATED: <Checked Date>	TITLE: SM6115			
QUALITY CONTROL: <QC By>	DATED: <QC Date>	CODE: P370AE	SIZE: D	DRAWING NO: P370AE	REV: V0.5
RELEASED: <Released By>	DATED: <Release Date>	SCALE: <Scale>		SHEET: 10 46	

REVISION RECORD			
LTR	ECO NO:	APPROVED:	DATE:

VPH_PWR BULK CAPS. DISTRIBUTE THESE ALL OVER U1601

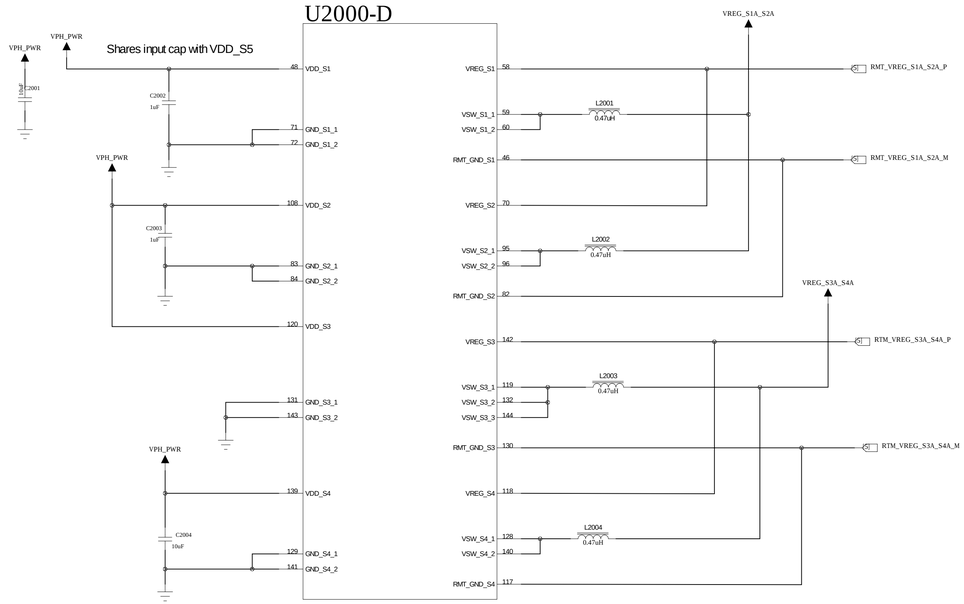

DRAWN: jack.yi	DATED: 20200416	COMPANY: <Company Name>	
CHECKED: <Checked By>	DATED: <Checked Date>	TITLE: SM6115	
QUALITY CONTROL: <QC By>	DATED: <QC Date>	CODE: P370AE	SIZE: D
RELEASED: <Released By>	DATED: <Release Date>	DRAWING NO: P370AE	REV: V0.5
		SCALE: <Scale>	SHEET: 46

REVISION RECORD			
LTR	ECO NO:	APPROVED:	DATE:

Shares input cap with VDD_S1

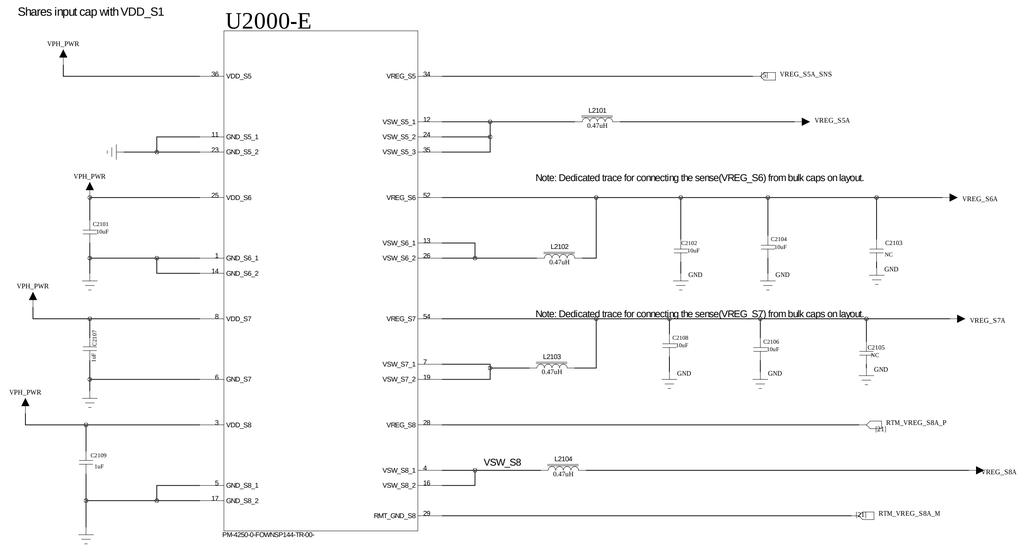

DRAWN: jack.yi	DATED: 20200416	COMPANY: <Company Name>			
CHECKED: <Checked By>	DATED: <Checked Date>	TITLE: SM6115			
QUALITY CONTROL: <QC By>	DATED: <QC Date>	CODE: P370AE	SIZE: D	DRAWING NO: P370AE	REV: V0.5
RELEASED: <Released By>	DATED: <Release Date>	SCALE: <Scale>		SHEET: 42 46	

REVISION RECORD			
LTR	ECO NO:	APPROVED:	DATE:

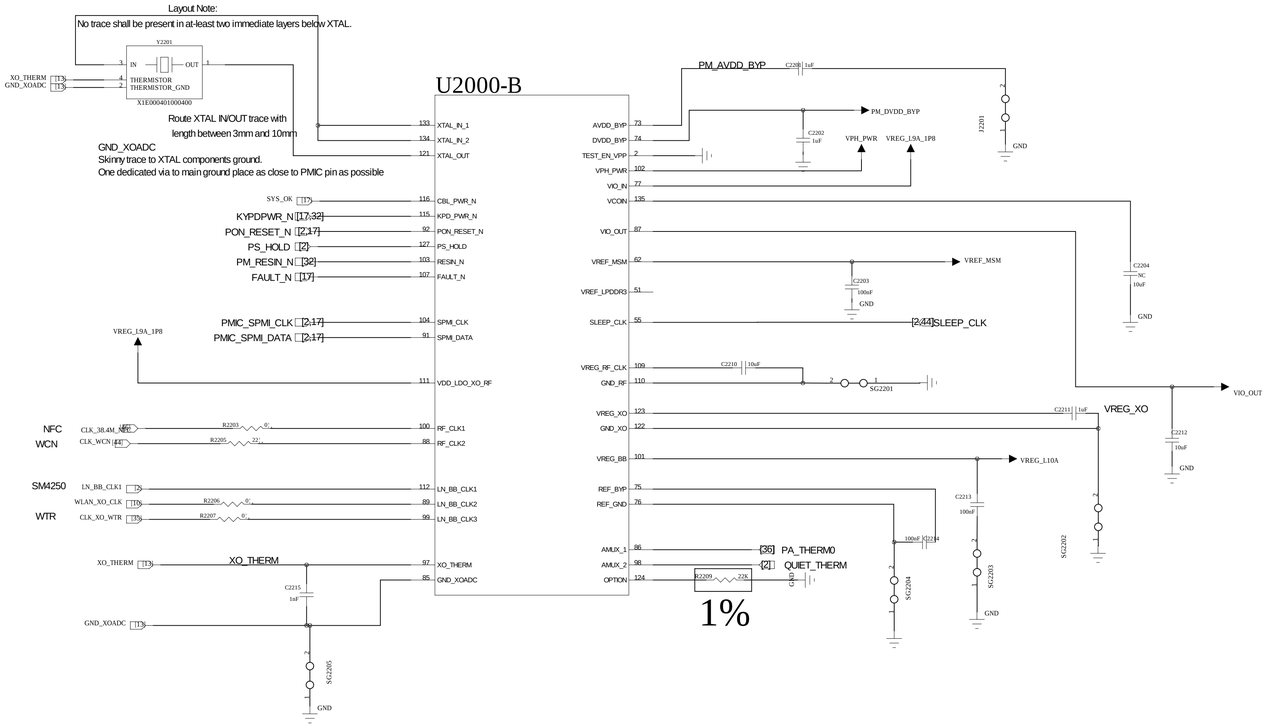

DRAWN: jack.yi	DATED: 20200416	COMPANY: <Company Name>	
CHECKED: <Checked By>	DATED: <Checked Date>	TITLE: SM6115	
QUALITY CONTROL: <QC By>	DATED: <QC Date>	CODE: P370AE	SIZE: D
RELEASED: <Released By>	DATED: <Release Date>	DRAWING NO: P370AE	REV: V0.5
		SCALE: <Scale>	SHEET: 43 46

REVISION RECORD			
LTR	ECO NO:	APPROVED:	DATE:

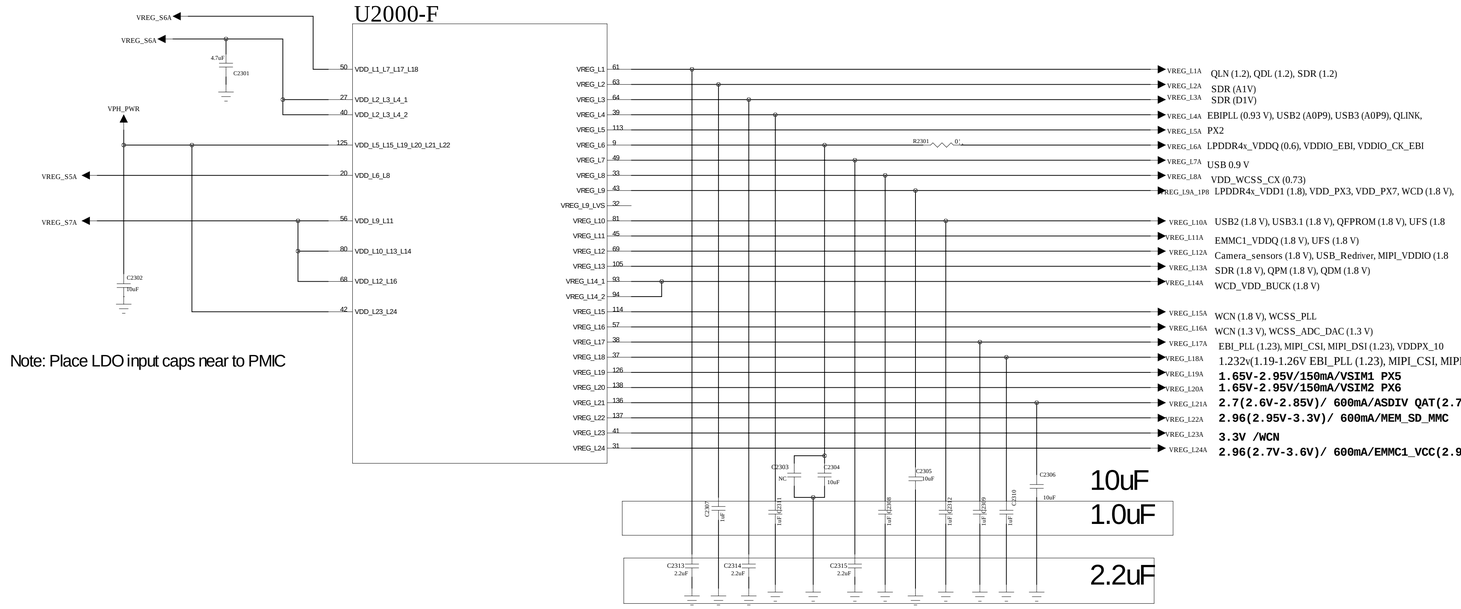

Note: Place LDO input caps near to PMIC

PM670 CHARGER

DRAWN: jack.yi	DATED: 20200416	COMPANY: <Company Name>	
CHECKED: <Checked By>	DATED: <Checked Date>	TITLE: SM6115	
QUALITY CONTROL: <QC By>	DATED: <QC Date>	CODE: P370AE / SIZE: D / DRAWING NO: P370AE / REV: V0.5	
RELEASED: <Released By>	DATED: <Release Date>	SCALE: <Scale>	SHEET: 44 46

REVISION RECORD			
LTR	ECO NO:	APPROVED:	DATE:

U2401

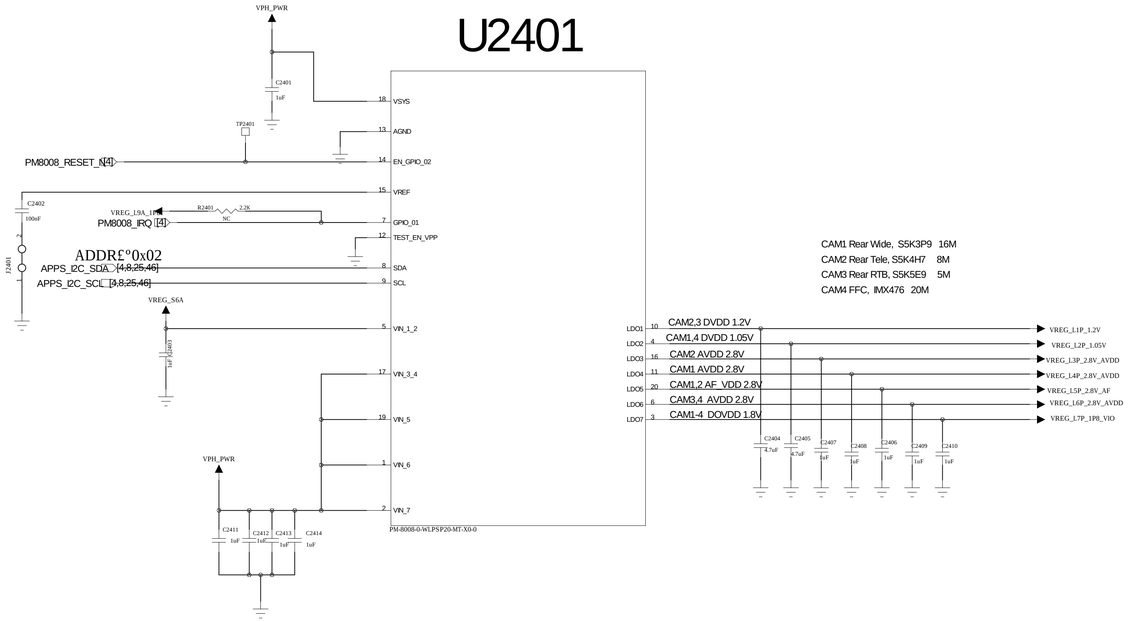

Vin Group	Source	Vin	Ipk (mA)	Pin #	Child LDOs
VIN1_2	S6A	1.35	1200	5	LDO1, LDO2
VIN3_4	VPH/VREG_BOB	3.80	600	17	LDO3, LDO4
VIN5	VPH/VREG_BOB	3.80	300	19	LDO5
VIN6	VPH/VREG_BOB	3.80	300	1	LDO6
VIN7	VPH/VREG_BOB	3.80	300	2	LDO7

DRAWN: jack.yi	DATED: 20200416	COMPANY: <Company Name>	
CHECKED: <Checked By>	DATED: <Checked Date>	TITLE: SM6115	
QUALITY CONTROL: <QC By>	DATED: <QC Date>	CODE: P370AE	SIZE: D
RELEASED: <Released By>	DATED: <Release Date>	DRAWING NO: P370AE	REV: V0.5
		SCALE: <Scale>	SHEET: 45 46

REVISION RECORD			
LTR	ECO NO:	APPROVED:	DATE:

NOTE:

Use C2501= 2.2uF for parallel Charging Config
Use C2501 = 4.7uF for only PMI Charging Config

NOTE:
C2501/C2502 can use the 16V capacitor too,
just for the BOM category normalized

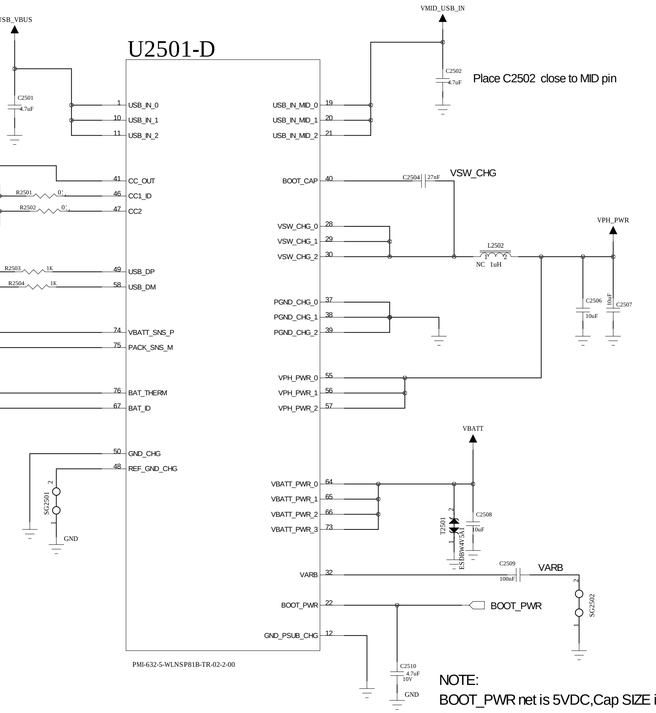

Layout Note:
PACK_SNS_M should have a dedicated route
to battery connector negative sense

NOTE:
BOOT_PWR net is 5VDC,Cap SIZE is 0603.
Do not use 0402 as may derate to -80%.

CAD NOTE : Trace from VARB to the cap, and cap to main GND plane with a dedicated via.
Avoid routing VARB trace directly under VSW_CHG trace to avoid coupling

COMPANY: <Company Name>					
TITLE: SM6115					
DRAWN: jack.yi	DATED: 20200416	CODE: P370AE	SIZE: D	DRAWING NO: P370AE	REV: V0.5
CHECKED: <Checked By>	DATED: <Checked Date>				
QUALITY CONTROL: <QC By>	DATED: <QC Date>				
RELEASED: <Released By>	DATED: <Release Date>	SCALE: <Scale>		SHEET: 46 46	

REVISION RECORD			
LTR	ECO NO:	APPROVED:	DATE:

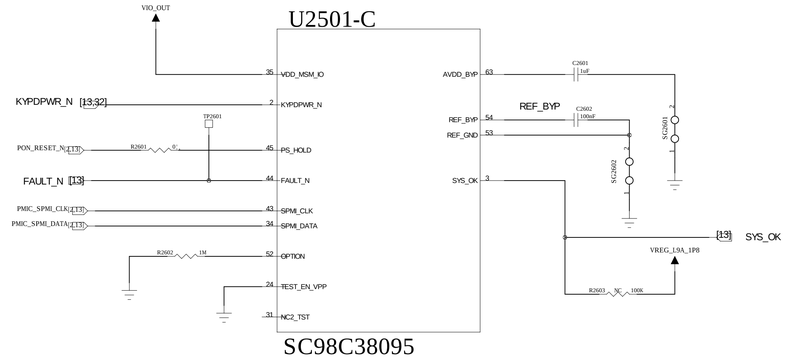

GPIO#	GPIO Function
GPIO1 (LV)	TypeC_CONN_THERM_SNS
GPIO2 (MV)	SMB_EN / HRLED
GPIO3_AMUX	SKIN_THERM
GPIO4 (LV)	NC
GPIO5_AMUX (MV)	NC
GPIO6 (LV)	WLED_EN
GPIO7_AMUX (LV)	SMB_VCHG_P
GPIO8_AMUX (LV)	SMB_VHG_M

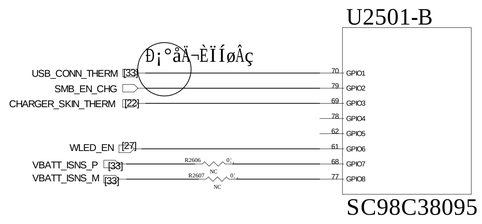

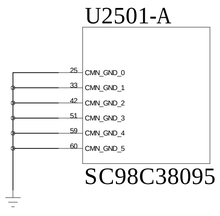

DRAWN: jack.yi	DATED: 20200416	COMPANY: <Company Name>	
CHECKED: <Checked By>	DATED: <Checked Date>	TITLE: SM6115	
QUALITY CONTROL: <QC By>	DATED: <QC Date>	CODE: P370AE / SIZE: D / DRAWING NO: P370AE / REV: V0.5	
RELEASED: <Released By>	DATED: <Release Date>	SCALE: <Scale>	SHEET: 46

REVISION RECORD			
LTR	ECO NO:	APPROVED:	DATE:

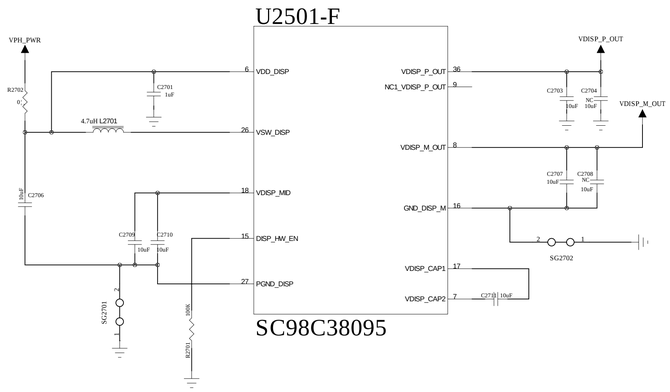

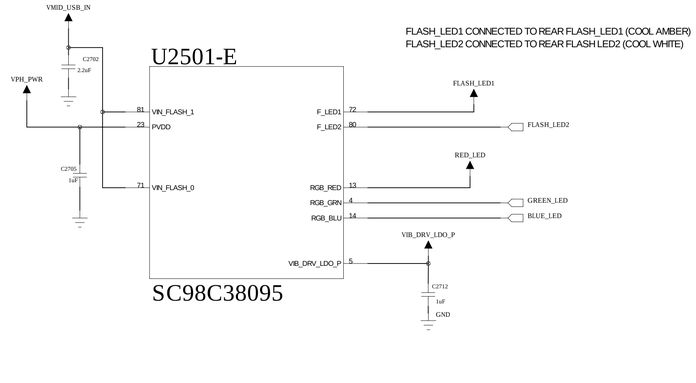

FLASH_LED1 CONNECTED TO REAR FLASH_LED1 (COOL AMBER)
FLASH_LED2 CONNECTED TO REAR FLASH LED2 (COOL WHITE)

DRAWN: jack.yi	DATED: 20200416	COMPANY: <Company Name>	
CHECKED: <Checked By>	DATED: <Checked Date>	TITLE: SM6115	
QUALITY CONTROL: <QC By>	DATED: <QC Date>	CODE: P370AE / SIZE: D / DRAWING NO: P370AE / REV: V0.5	
RELEASED: <Released By>	DATED: <Release Date>	SCALE: <Scale>	SHEET: 46

REVISION RECORD			
LTR	ECO NO:	APPROVED:	DATE:

OVP

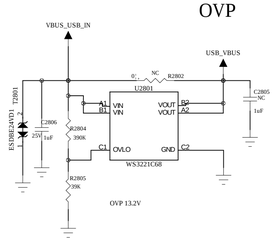

DRAWN: jack.yi	DATED: 20200416	COMPANY: <Company Name>			
		TITLE: SM6115			
CHECKED: <Checked By>	DATED: <Checked Date>	CODE: P370AE	SIZE: D	DRAWING NO: P370AE	REV: V0.5
QUALITY CONTROL: <QC By>	DATED: <QC Date>				
RELEASED: <Released By>	DATED: <Release Date>	SCALE: <Scale>		SHEET: 46 46	

REVISION RECORD			
LTR	ECO NO:	APPROVED:	DATE:

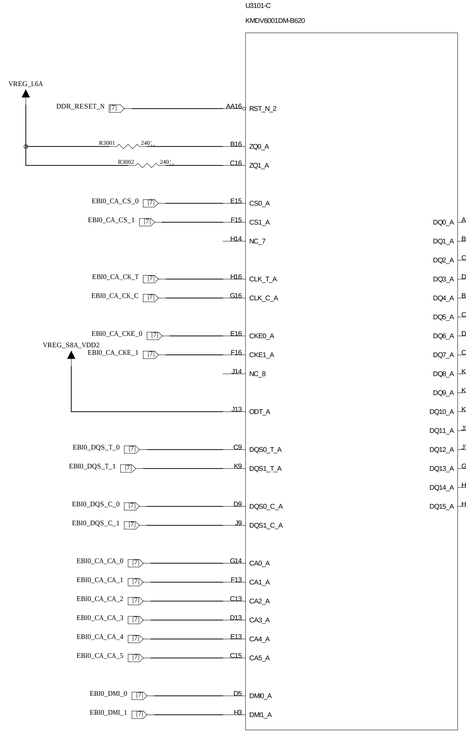

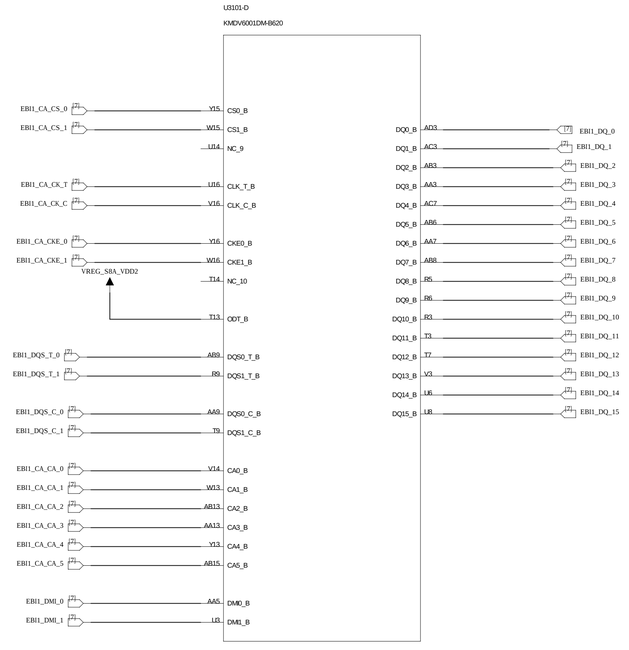

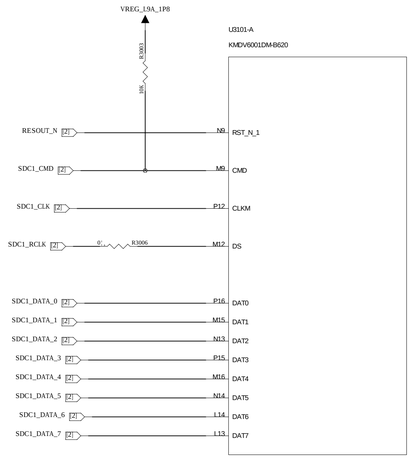

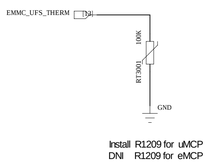

Install R1209 for uMCP
DNI R1209 for eMCP

DRAWN: jack.yi	DATED: 20200416	COMPANY: <Company Name>	
CHECKED: <Checked By>	DATED: <Checked Date>	TITLE: SM6115	
QUALITY CONTROL: <QC By>	DATED: <QC Date>	CODE: P370AE	SIZE: D
RELEASED: <Released By>	DATED: <Release Date>	DRAWING NO: P370AE	REV: V0.5
		SCALE: <Scale>	SHEET: 30 46

REVISION RECORD			
LTR	ECO NO:	APPROVED:	DATE:

U3101-F

KMDV6001DMB620

VREG_L24A

C3101 1nF

VDDI

R3102 0'

VREG_L11A

C3106 1nF | C3110 2.2nF | C3107 2.2nF | C3108 100nF | C3109 100nF

R3103 0'

C3111 4.7nF | C3113 1nF | C3114 100nF | C3112 100nF

VREG_L6A

C3124 NC | C3121 2.2nF | C3122 1nF | C3123 1nF | C3125 1nF | C3126 1nF

L17	VDDI	A4	VDD1_1
M17	VCC_1	A9	VDD1_2
N17	VCC_2	A15	VDD1_3
P17	VCC_3	A16	VDD1_4
J15	VCCQ_1	B15	VDD1_5
J16	VCCQ_2	AC15	VDD1_6
J17	VCCQ_3	AD4	VDD1_7
K15	VCCQ_4	AD9	VDD1_8
R13	VCCQ_5	AD15	VDD1_9
R14	VCCQ_6	AD16	VDD1_10
T15	VCCQ_7		
T16	VCCQ_8		
A6	VDDQ_1	A5	VDD2_1
A7	VDDQ_2	A8	VDD2_2
A13	VDDQ_3	B9	VDD2_3
A14	VDDQ_4	B13	VDD2_4
B5	VDDQ_5	B14	VDD2_5
H5	VDDQ_6	G7	VDD2_6
H6	VDDQ_7	G8	VDD2_7
J4	VDDQ_8	G9	VDD2_8
J5	VDDQ_9	K2	VDD2_9
J8	VDDQ_10	L7	VDD2_10
T4	VDDQ_11	L8	VDD2_11
T5	VDDQ_12	L9	VDD2_12
T8	VDDQ_13	P7	VDD2_13
U5	VDDQ_14	P8	VDD2_14
U9	VDDQ_15	P9	VDD2_15
AC5	VDDQ_16	R2	VDD2_16
AD6	VDDQ_17	V7	VDD2_17
AD7	VDDQ_18	V8	VDD2_18
AD13	VDDQ_19	V9	VDD2_19
AD14	VDDQ_20	AC9	VDD2_20
		AC13	VDD2_21
		AC14	VDD2_22
		AD5	VDD2_23
		AD8	VDD2_24

VREG_L9A_1P8

C3102 2.2nF | C3103 2.2nF | C3104 1nF | C3105 1nF

JP3103 [Z] RTM_VREG_S8A_P

VREG_S8A_VDD2

VREG_S8A

BULK CAP

C3116 10nF | C3117 10nF | C3118 10nF | C3119 NC | C3115 4.7nF | C3120 4.7nF

R3104 0'

JP3106 [Z] RTM_VREG_S8A_M

C3127 1nF | C3128 1nF

C3129 1nF | C3130 1nF | C3131 1nF

U3101-B

KMDV6001DMB620

K13	VSSM_1	G13	VSS_18
K14	VSSM_2	G15	VSS_19
K16	VSSM_3	H4	VSS_20
L12	VSSM_4	H7	VSS_21
L15	VSSM_5	H13	VSS_22
L16	VSSM_6	H15	VSS_23
M8	VSSM_7	J6	VSS_24
M13	VSSM_8	K4	VSS_25
M14	VSSM_9	K7	VSS_26
N8	VSSM_10	K8	VSS_27
N12	VSSM_11	R4	VSS_28
N15	VSSM_12	R7	VSS_29
N16	VSSM_13	R8	VSS_30
P13	VSSM_14	T6	VSS_31
P14	VSSM_15	U4	VSS_32
R15	VSSM_16	U7	VSS_33
R16	VSSM_17	U13	VSS_34
R17	VSSM_18	U15	VSS_35
		V4	VSS_36
		V5	VSS_37
B4	VSS_1	V6	VSS_38
B6	VSS_2	V13	VSS_39
B8	VSS_3	V15	VSS_40
C4	VSS_4	W14	VSS_41
C5	VSS_5	Y14	VSS_42
C7	VSS_6	AA4	VSS_43
C14	VSS_7	AA6	VSS_44
D4	VSS_8	AA8	VSS_45
D6	VSS_9	AA14	VSS_46
D8	VSS_10	AA15	VSS_47
D14	VSS_11	AB4	VSS_48
D15	VSS_12	AB5	VSS_49
E14	VSS_13	AB7	VSS_50
F14	VSS_14	AB14	VSS_51
G4	VSS_15	AC4	VSS_52
G5	VSS_16	AC6	VSS_53
G6	VSS_17	AC8	VSS_54

U3101-E

KMDV6001DMB620

M3	VSF1	A1	DNU_1
N3	VSF2	A2	DNU_2
M4	VSF3	A17	DNU_3
N4	VSF4	A18	DNU_4
M5	VSF5	B1	DNU_5
N5	VSF6	B18	DNU_6
M6	VSF7	AC1	DNU_7
N6	VSF8	AC18	DNU_8
M7	VSF9	AD1	DNU_9
		AD2	DNU_10
D16	NC_1	AD17	DNU_11
K17	NC_2	AD18	DNU_12
N7	NC_3		
T17	NC_4		
AB16	NC_5		
AC16	NC_6		

VREG_L6A

R3106 NC 240'

C3132 NC 1nF | C3133 NC 1nF

DRAWN: jack.yi	DATED: 20200416	COMPANY: <Company Name>	
CHECKED: <Checked By>	DATED: <Checked Date>	TITLE: SM6115	
QUALITY CONTROL: <QC By>	DATED: <QC Date>	CODE: P370AE	SIZE: D
RELEASED: <Released By>	DATED: <Release Date>	DRAWING NO: P370AE	REV: V0.5
		SCALE: <Scale>	SHEET: 21 46

REVISION RECORD			
LTR	ECO NO:	APPROVED:	DATE:

Note:Place RT3202 close to Hot spot between PMI632 and SMB1355

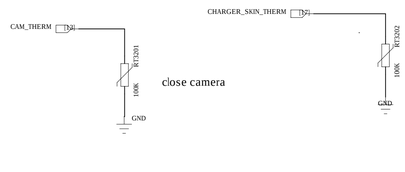

DRAWN: jack.yi	DATED: 20200416	COMPANY: <Company Name>			
CHECKED: <Checked By>	DATED: <Checked Date>	TITLE: SM6115			
QUALITY CONTROL: <QC By>	DATED: <QC Date>	CODE: P370AE	SIZE: D	DRAWING NO: P370AE	REV: V0.5
RELEASED: <Released By>	DATED: <Release Date>	SCALE: <Scale>		SHEET: 22 46	

REVISION RECORD			
LTR	ECO NO:	APPROVED:	DATE:

Gry-sensor

ICM-42605	b110100X
LSM6DS0ETR3	0xD4(R) 0XD5(W)

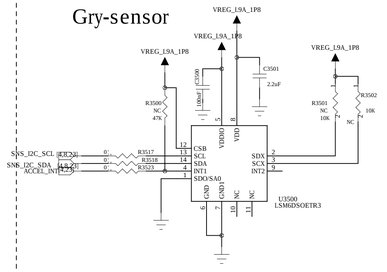

Note: 77-4

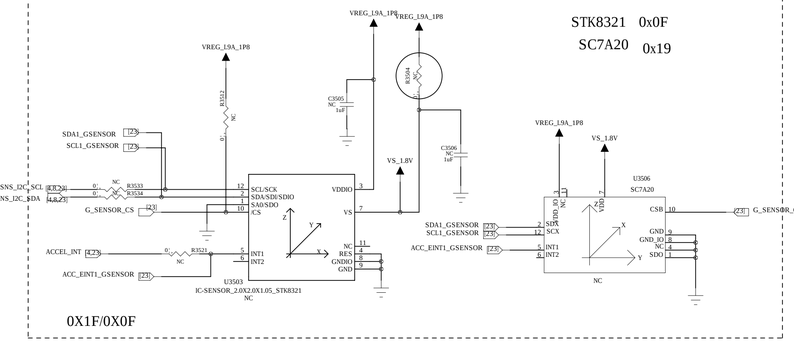

STK8321 0x0F

SC7A20 0x19

0X1F/0X0F

E-Compass

QMC6308	0x2C//58H(W)/59(R)
AKM09918	0x0C

Note: 77-1

Note: 77-6

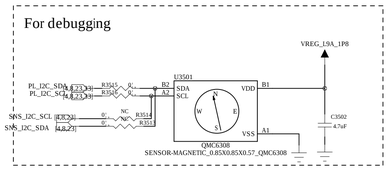

Proximity Sensor charge

	I2C addr
MN59406D	0X41
VCN36832A	0X60

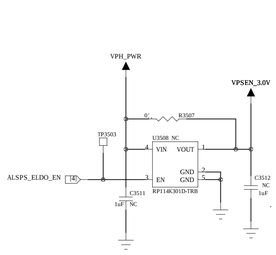

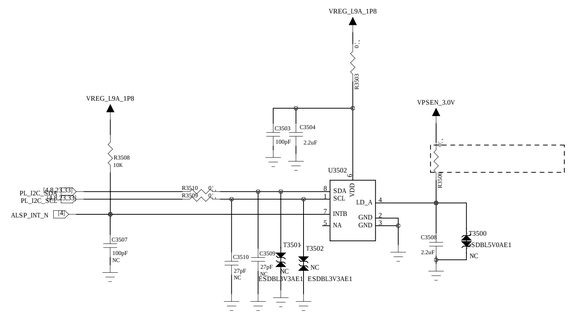

Optional

G+Gyro Sensor

Schematic design notice of "77_PERI_SENSORS_MEMs_ALS/PS" page.

[M sensor] Keep a minimum distance of 15mm from power ICs / PCB traces of more than 100mA / magnet component. Check HW design notice for more detail

[A+G] For optmized GPS performance, please check HW design notice for Sensor selection guide

[A+G] MUST use SPI for optmized sensor hub performance **DO NOT USE i2C**

[A+G] Suggest choose sensor support FIFO watermark interrupt otherwise we cannot support Hifi-sensor, daydream VR. And Sensor-location accuracy will become worse.

[Baro] Reserve Baro sensor for LPPe feautre (Must for North America Operator / NA SKU)

DO NOT share Sensor hub i2C to other non-SCP device

Interrupt pin of MEMS sensor must be assign to ball EINT[12:0]

DRAWN: jack.yi	DATED: 20200416	COMPANY: <Company Name>	
CHECKED: <Checked By>	DATED: <Checked Date>	TITLE: SM6115	
QUALITY CONTROL: <QC By>	DATED: <QC Date>	CODE: P370AE / SIZE: D / DRAWING NO: P370AE / REV: V0.5	
RELEASED: <Released By>	DATED: <Release Date>	SCALE: <Scale>	SHEET: 33 46

REVISION RECORD			
LTR	ECO NO:	APPROVED:	DATE:

Sub Mic

Close to Codec

Close to Mic

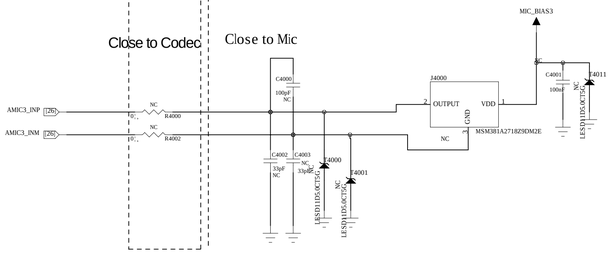

Main Mic

CLOSE TO CODEC

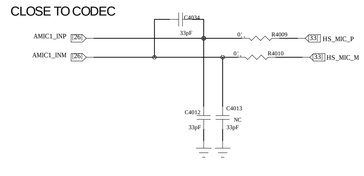

CTIA Mode

Note: Ferrite beads and their corresponding bypass capacitors on on CDC_HPH_L_P, CDC_HPH_L_M and CDC_HPH_REF are needed to reduce noise generated by audio/FM concurrency

Headset Mic

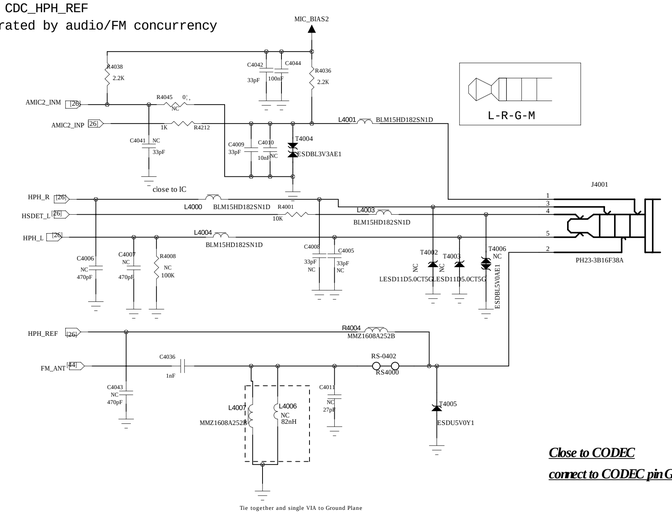

Close to CODEC

connect to CODEC pin G14 and connect to GND at CODEC

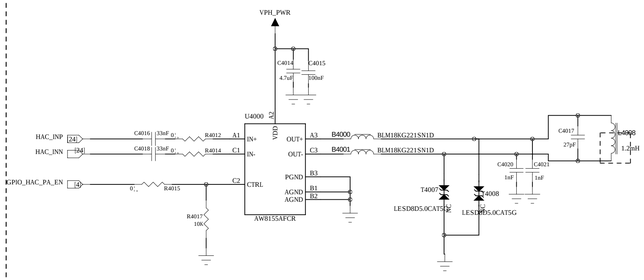

Handset Receiver

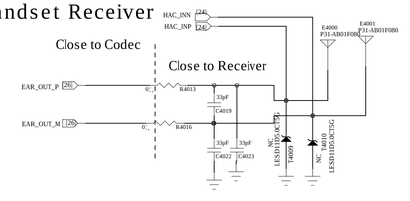

DRAWN: jack.yi	DATED: 20200416	COMPANY: <Company Name>	
CHECKED: <Checked By>	DATED: <Checked Date>	TITLE: SM6115	
QUALITY CONTROL: <QC By>	DATED: <QC Date>	CODE: P370AE	SIZE: D
RELEASED: <Released By>	DATED: <Release Date>	DRAWING NO: P370AE	REV: V0.5
		SCALE: <Scale>	SHEET: 24 46

REVISION RECORD			
LTR	ECO NO:	APPROVED:	DATE:

SPK_AMP

I2C:0X34

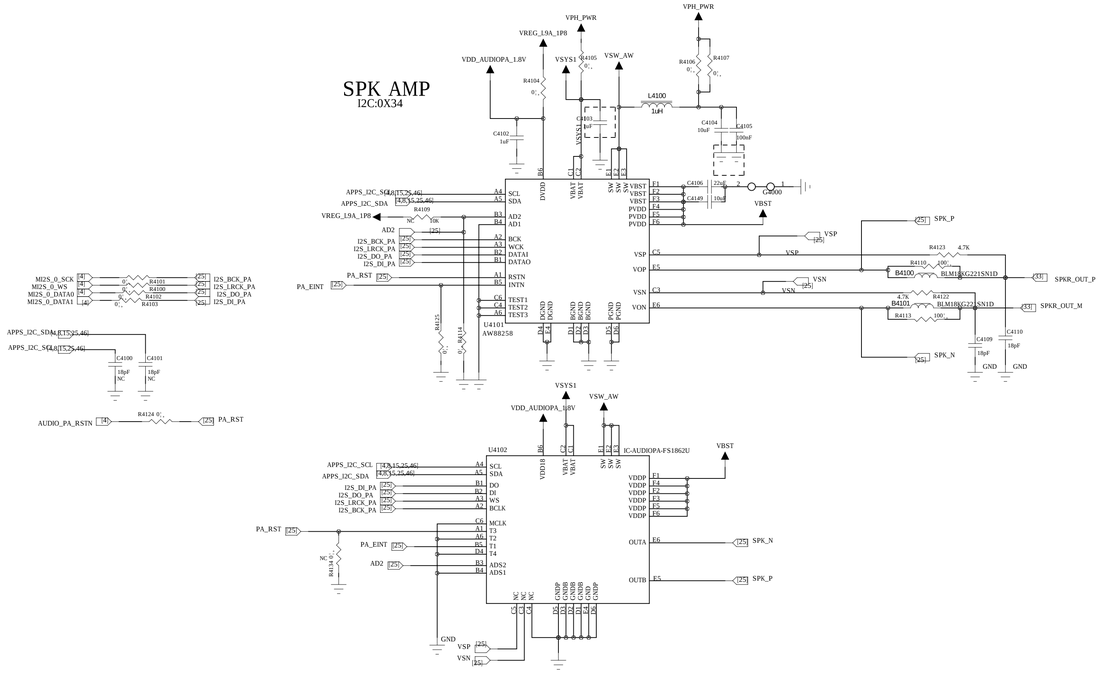

DRAWN: jack.yi	DATED: 20200416	COMPANY: <Company Name>	
CHECKED: <Checked By>	DATED: <Checked Date>	TITLE: SM6115	
QUALITY CONTROL: <QC By>	DATED: <QC Date>	CODE: P370AE / SIZE: D / DRAWING NO: P370AE / REV: V0.5	
RELEASED: <Released By>	DATED: <Release Date>	SCALE: <Scale>	SHEET: 25 46

6	5	4	3	2	1

REVISION RECORD			
LTR	ECO NO:	APPROVED:	DATE:

U4200

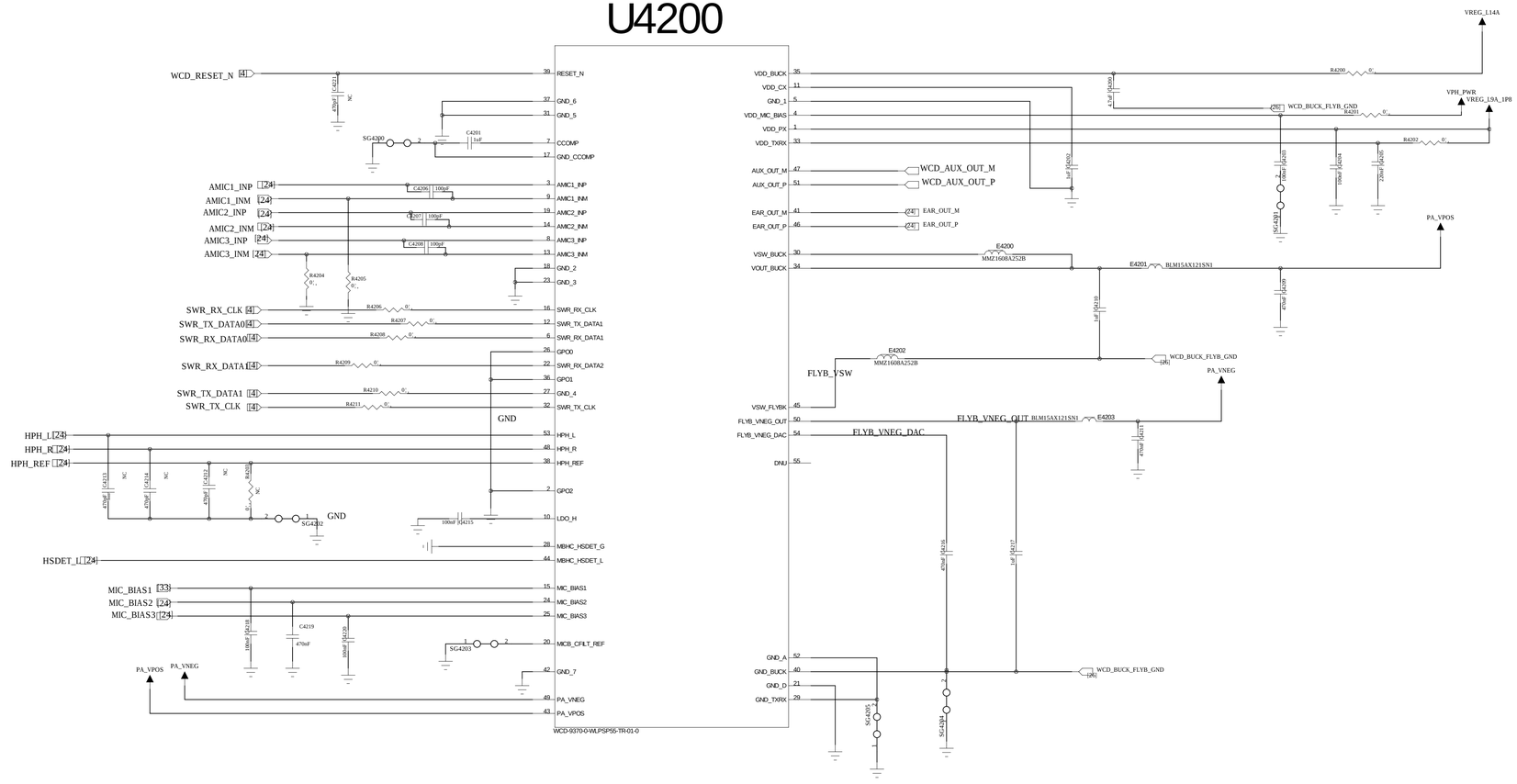

DRAWN: jack.yi	DATED: 20200416	COMPANY: <Company Name>	
CHECKED: <Checked By>	DATED: <Checked Date>	TITLE: SM6115	
QUALITY CONTROL: <QC By>	DATED: <QC Date>	CODE: P370AE	SIZE: D
RELEASED: <Released By>	DATED: <Release Date>	DRAWING NO: P370AE	REV: V0.5
		SCALE: <Scale>	SHEET: 36 46

REVISION RECORD			
LTR	ECO NO:	APPROVED:	DATE:

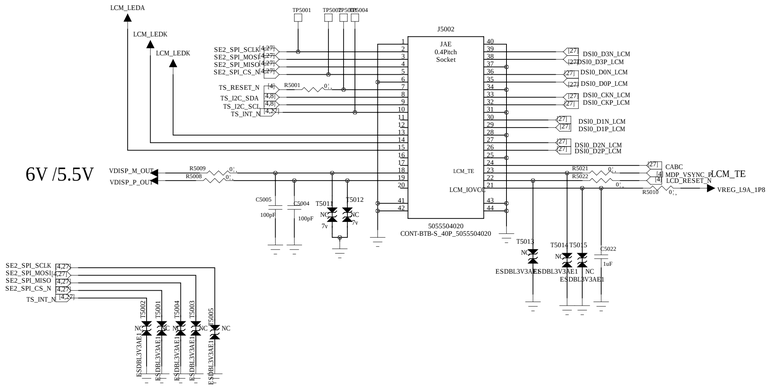

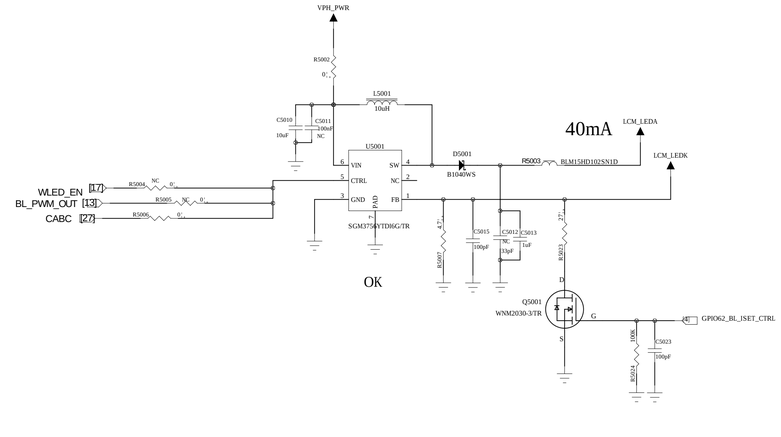

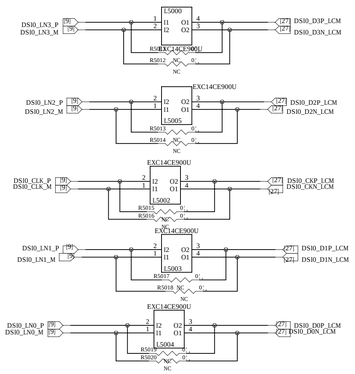

DRAWN: jack.yi	DATED: 20200416	COMPANY: <Company Name>	
CHECKED: <Checked By>	DATED: <Checked Date>	TITLE: SM6115	
QUALITY CONTROL: <QC By>	DATED: <QC Date>	CODE: P370AE	SIZE: D
RELEASED: <Released By>	DATED: <Release Date>	DRAWING NO: P370AE	REV: V0.5
		SCALE: <Scale>	SHEET: 37 46

REVISION RECORD			
LTR	ECO NO:	APPROVED:	DATE:

Fingerprint Connector

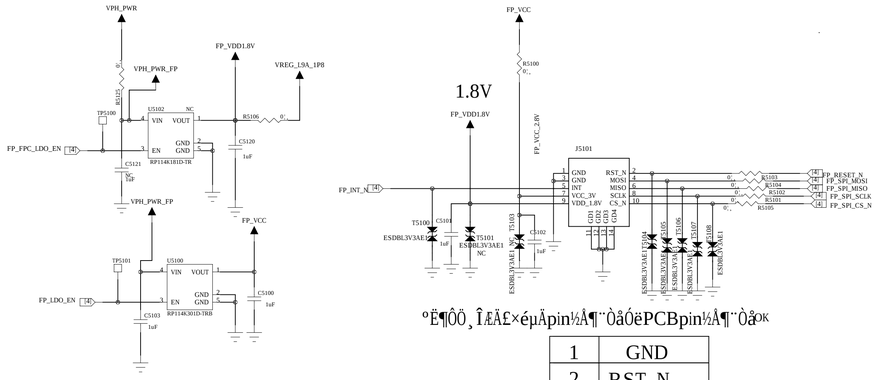

ºË¶Ô0¸ÎÆÄ£×éµÄpin½Å¶¨Òå0ëPCBpin½Å¶¨Òåºk

1	GND
2	RST_N
3	GND
4	MOSI
5	INT
6	MISO
7	VCC:2V8/3.0V/3.3V GF3658:VCC¹©µç 2.8V/3.0V/3.3V
8	SCLK
9	DVDD1V8 FPC1520A:DVDD 1.8V
10	CS_N

DRAWN: jack.yi	DATED: 20200416	COMPANY: <Company Name>			
CHECKED: <Checked By>	DATED: <Checked Date>	TITLE: SM6115			
QUALITY CONTROL: <QC By>	DATED: <QC Date>	CODE: P370AE	SIZE: D	DRAWING NO: P370AE	REV: V0.5
RELEASED: <Released By>	DATED: <Release Date>	SCALE: <Scale>		SHEET: 28 46	

			DOVDD	ID	ADDR	driveradd	epram
Sensor:S5KGM1SP03-FGX9 VIBE°B06T4601(48M)	2.7~3.0V/20ma	1.05~1.15V/139.9ma	1.7~1.9V/2ma	NC	0X5A(W),0X5B(R)	0X18(W)/0X19(R)	0XB0(W)/0XB1(R)
S5K4H7YX03-FGX9 8M-FRONT	2.7-2.9V/30ma	1.14V-1.26V/97ma	1.7-1.9V	1.8V	0X20(W),0X21(R)		
S5K5E9YX04(5MAF)	2.8V	1.2V	1.7~1.9V/2ma	NC	0X20(W),0X21(R)	0X18(W)/0X19(R)	0XA4(W)/0XA5(R)
S5K4H7YX03-FGX9(8M)	2.7-2.9V/30ma	1.14V-1.26V/97ma	1.7-1.9V	NC	0X5A(W),0X5B(R)		
OV02A10(2M)	2.7~3.0V/20ma	NC	1.7~3.0V/10ma	GND	0X7A(W),0X7B(R)		

REVISION RECORD			
LTR	ECO NO:	APPROVED:	DATE:

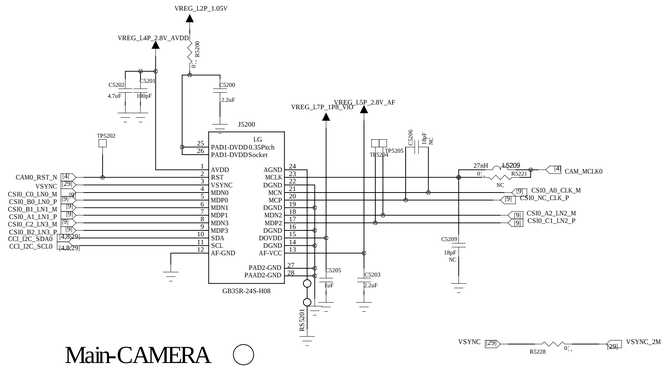

Main-CAMERA

48M-CAM

ºÉ¶ÔÉäÏñÍ·ºÍPCB pin½Å¶¨Ò壠

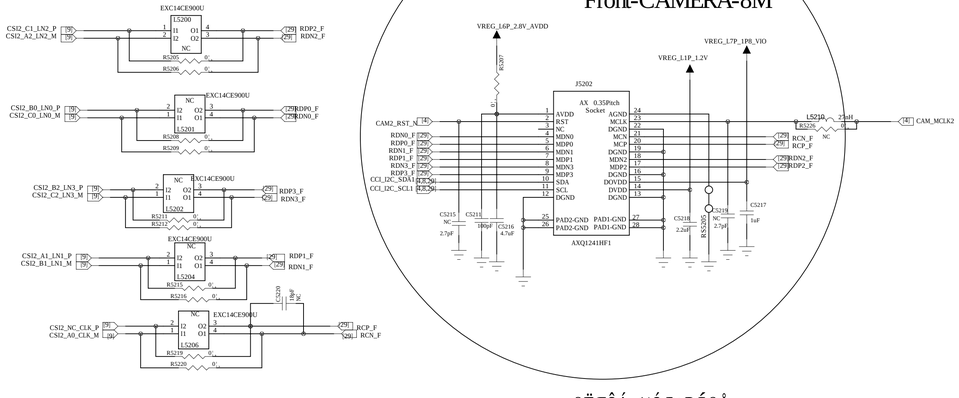

ºË¶ÔÁ¬½ÓÆ÷ÐÍºÅ

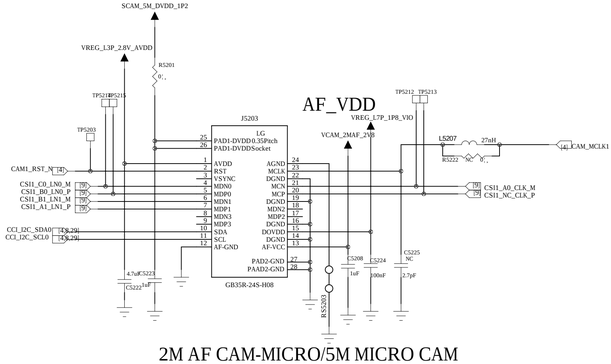

2M AF CAM-MICRO/5M MICRO CAM

DRAWN: jack.yi	DATED: 20200416	COMPANY: <Company Name>	
CHECKED: <Checked By>	DATED: <Checked Date>	TITLE: SM6115	
QUALITY CONTROL: <QC By>	DATED: <QC Date>	CODE: P370AE / SIZE: D / DRAWING NO: P370AE / REV: V0.5	
RELEASED: <Released By>	DATED: <Release Date>	SCALE: <Scale>	SHEET: 29 46

REVISION RECORD			
LTR	ECO NO:	APPROVED:	DATE:

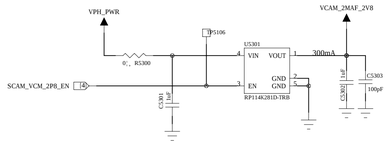

5M CAM VCM AF 2.8v

5M CAM DVDD 1.2v

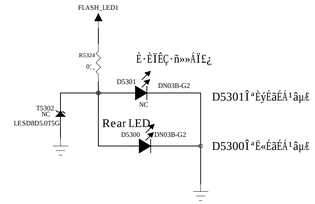

COMPANY: <Company Name>					
TITLE: SM6115					
DRAWN: jack.yi	DATED: 20200416	CODE: P370AE	SIZE: D	DRAWING NO: P370AE	REV: V0.5
CHECKED: <Checked By>	DATED: <Checked Date>				
QUALITY CONTROL: <QC By>	DATED: <QC Date>				
RELEASED: <Released By>	DATED: <Release Date>	SCALE: <Scale>		SHEET: 30 46	

REVISION RECORD			
LTR	ECO NO:	APPROVED:	DATE:

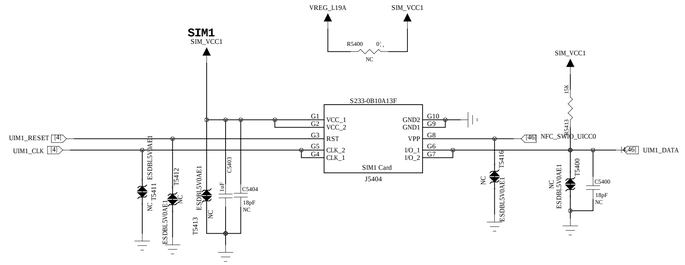

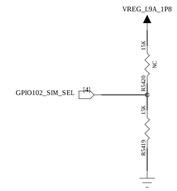

	R5419	R5420
f=SIM	15K	NC
pSSIM	NC	15K

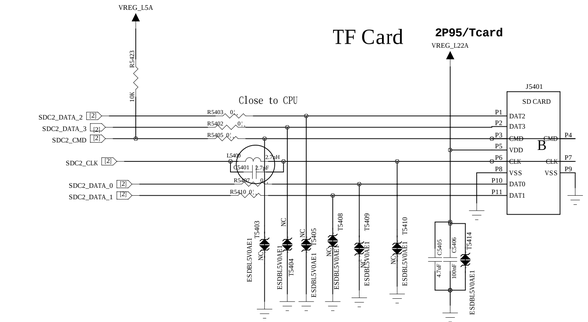

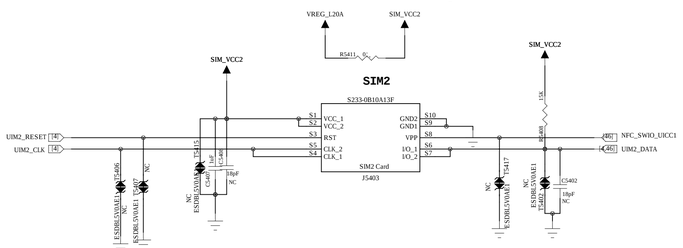

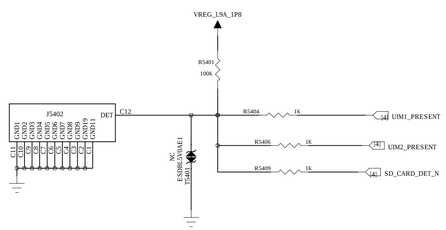

INT
- Normal:0
- Insert:1

DRAWN: jack.yi	DATED: 20200416	COMPANY: <Company Name>	
		TITLE: SM6115	
CHECKED: <Checked By>	DATED: <Checked Date>	CODE: P370AE	SIZE: D
QUALITY CONTROL: <QC By>	DATED: <QC Date>	DRAWING NO: P370AE	REV: V0.5
RELEASED: <Released By>	DATED: <Release Date>	SCALE: <Scale>	SHEET: 3d 46

REVISION RECORD			
LTR	ECO NO:	APPROVED:	DATE:

MP Test point

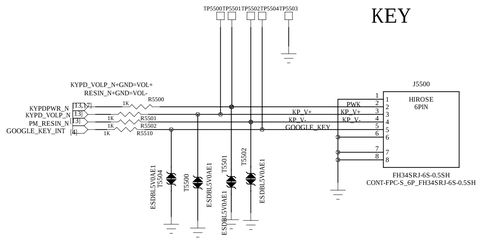

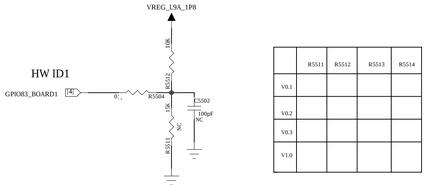

	R5511	R5512	R5513	R5514
V0.1				
V0.2				
V0.3				
V1.0				

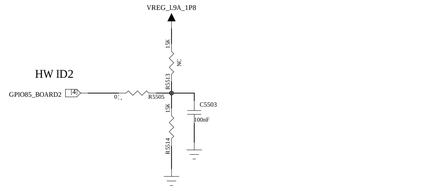

Charge Indicator

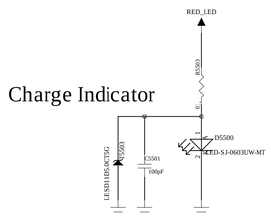

DRAWN: jack.yi	DATED: 20200416	COMPANY: <Company Name>	
		TITLE: SM6115	
CHECKED: <Checked By>	DATED: <Checked Date>	CODE: P370AE	SIZE: D
QUALITY CONTROL: <QC By>	DATED: <QC Date>	DRAWING NO: P370AE	REV: V0.5
RELEASED: <Released By>	DATED: <Release Date>	SCALE: <Scale>	SHEET: 32 46

REVISION RECORD			
LTR	ECO NO:	APPROVED:	DATE:

L21A:2.8V/600mA

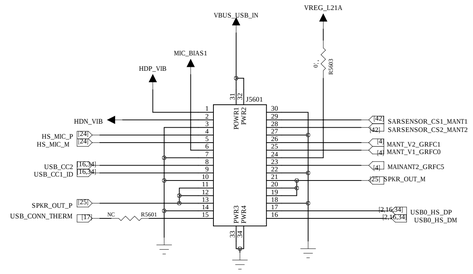

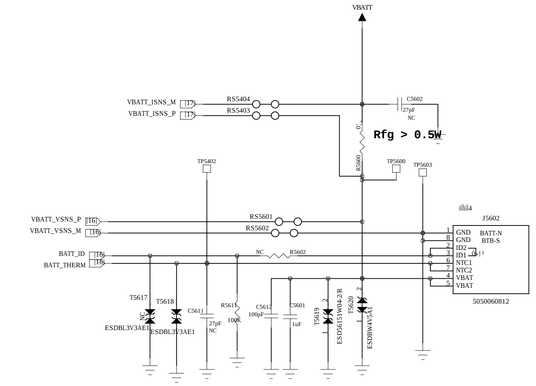

Battery ID: ID1 con ID2/ ID1 CON GND

NO BAT: 1.35V

ÐÀÍú´ï ID ID1 CON ID2 0.77V

¶þ¹©ID:con GND VADC:0V

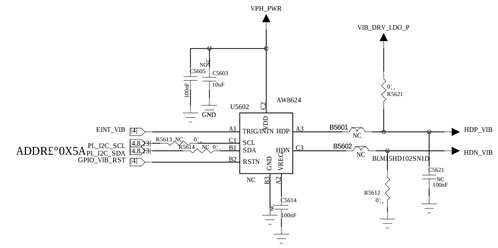

ADDR£°0X5A

DRAWN: jack.yi	DATED: 20200416	COMPANY: <Company Name>	
CHECKED: <Checked By>	DATED: <Checked Date>	TITLE: SM6115	
QUALITY CONTROL: <QC By>	DATED: <QC Date>	CODE: P370AE	SIZE: D
RELEASED: <Released By>	DATED: <Release Date>	DRAWING NO: P370AE	REV: V0.5
		SCALE: <Scale>	SHEET: 33 46

REVISION RECORD			
LTR	ECO NO:	APPROVED:	DATE:

Debug Test Point

RAM dump

UART

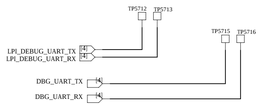

Fixture Test Point

USB

Refer to Page 26
Batery

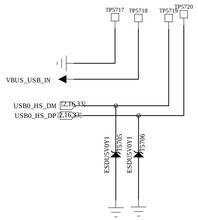

TYPE_CC1,CC2

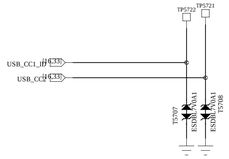

Key

Refer to Page 55

FORCED_USB BOOT

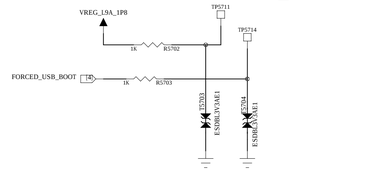

Mark

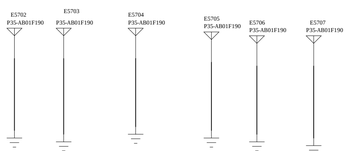

shielding can

BB

PDN

RF

WCN

4G PA

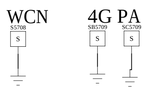

Metal Grounding

Top

Bottom

DRAWN: jack.yi	DATED: 20200416	COMPANY: <Company Name>			
		TITLE: SM6115			
CHECKED: <Checked By>	DATED: <Checked Date>	CODE: P370AE	SIZE: D	DRAWING NO: P370AE	REV: V0.5
QUALITY CONTROL: <QC By>	DATED: <QC Date>				
RELEASED: <Released By>	DATED: <Release Date>	SCALE: <Scale>		SHEET: 34 46	

WTR3925 POWER

PIN	max rating	min width@add 20%
VDD_RF1_DIG	25MA	>30MA@0.078MM
VDD_RF1_TVCO	35MA	>42MA@0.078MM
VDD_RF1_TSIG	175MA	>210MA@0.25MM
VDD_RF1_RX1	40MA	>48MA@0.1MM
VDD_RF1_RX2	70MA	>84MA@0.1MM
VDD_RF2	250MA	>300MA@0.3MM

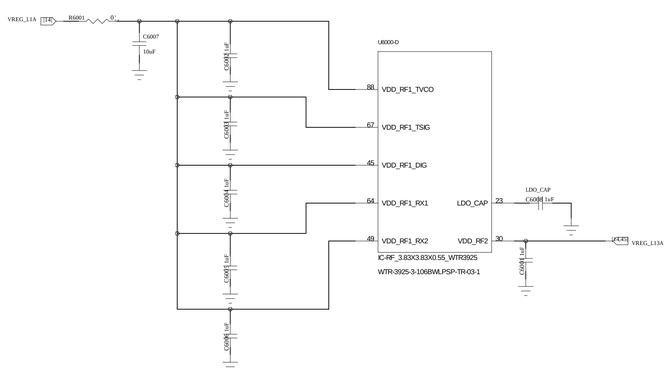

´Ë´¦WTR3925µÄ1uFµçÈÝÐèÒª¸ÄÎª10VÄÍÑ¹µÄÐÍºÅ

TX

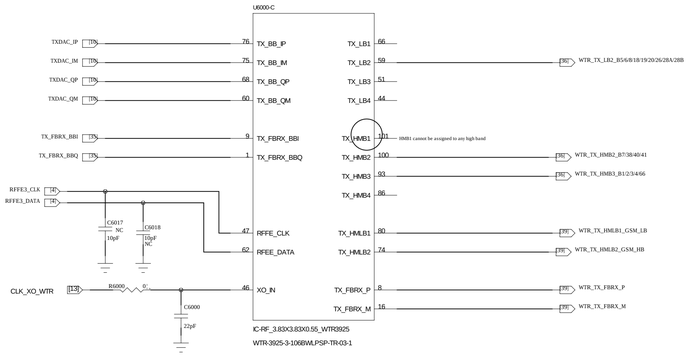

PRX

REVISION RECORD			
LTR	ECO NO:	APPROVED:	DATE:

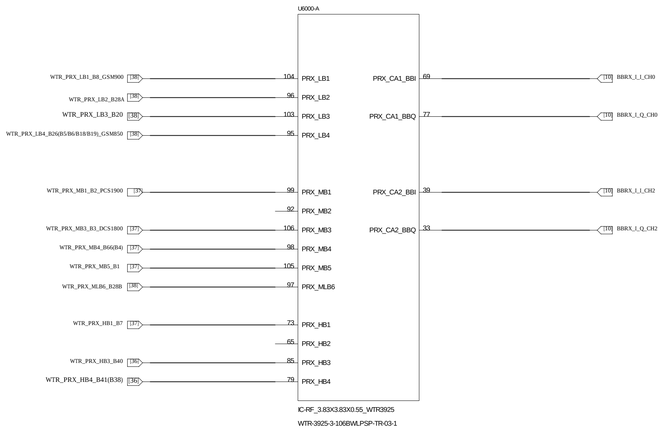

GND

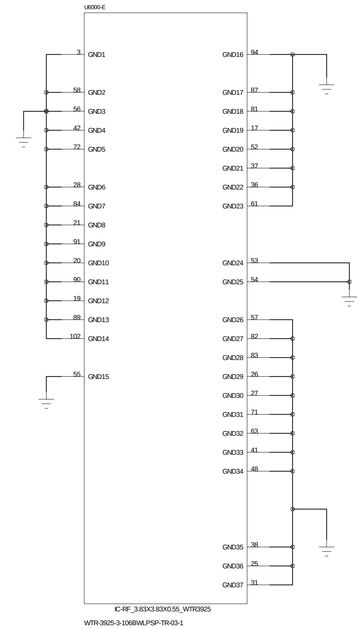

DRX

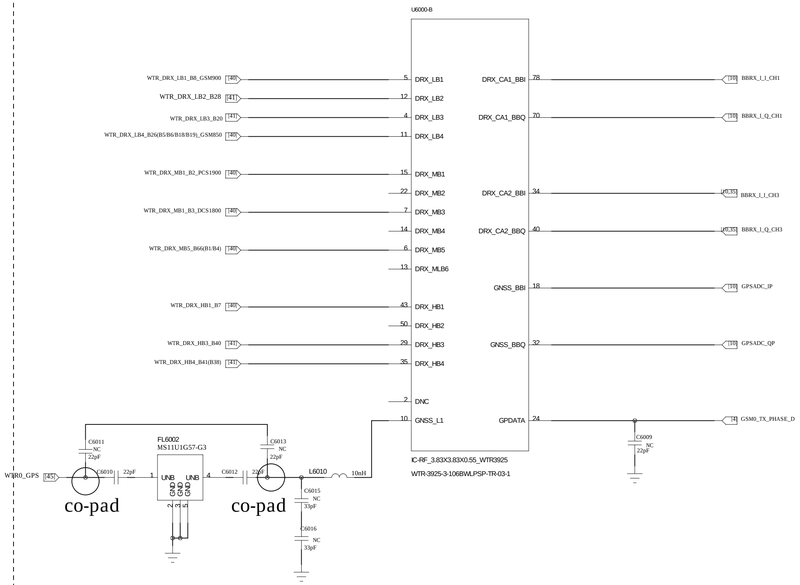

DRDI

	DRDI2	DRDI1	DRDI0	R6016	R6015	R6014	R6013	R6012	R6011
SKU1£°LA	0	0	0	NC	47K	NC	47K	NC	47K
SKU2£°EU	0	0	1	NC	47K	NC	47K	47K	NC
SKU3£°Global	0	1	0	NC	47K	47K	NC	NC	47K
SKU4£°	0	1	1	NC	47K	47K	NC	47K	NC
SKU5£°	1	0	0	47K	NC	NC	47K	NC	47K
SKU6£°	1	0	1	47K	NC	NC	47K	47K	NC
SKU7£°	1	1	0	47K	NC	47K	NC	NC	47K
SKU8£°	1	1	1	47K	NC	47K	NC	47K	NC

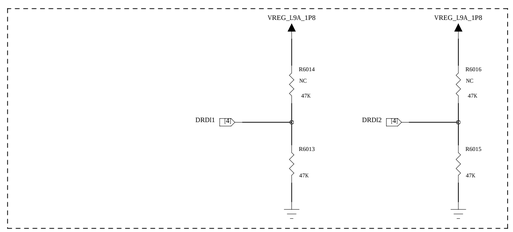

DRAWN: jack.yi	DATED: 20200416	COMPANY: <Company Name>	
CHECKED: <Checked By>	DATED: <Checked Date>	TITLE: WTR2965	
QUALITY CONTROL: <QC By>	DATED: <QC Date>	CODE: P370AE	SIZE: D
RELEASED: <Released By>	DATED: <Release Date>	DRAWING NO: P370AE	REV: V0.5
		SCALE: <Scale>	SHEET: 35 46

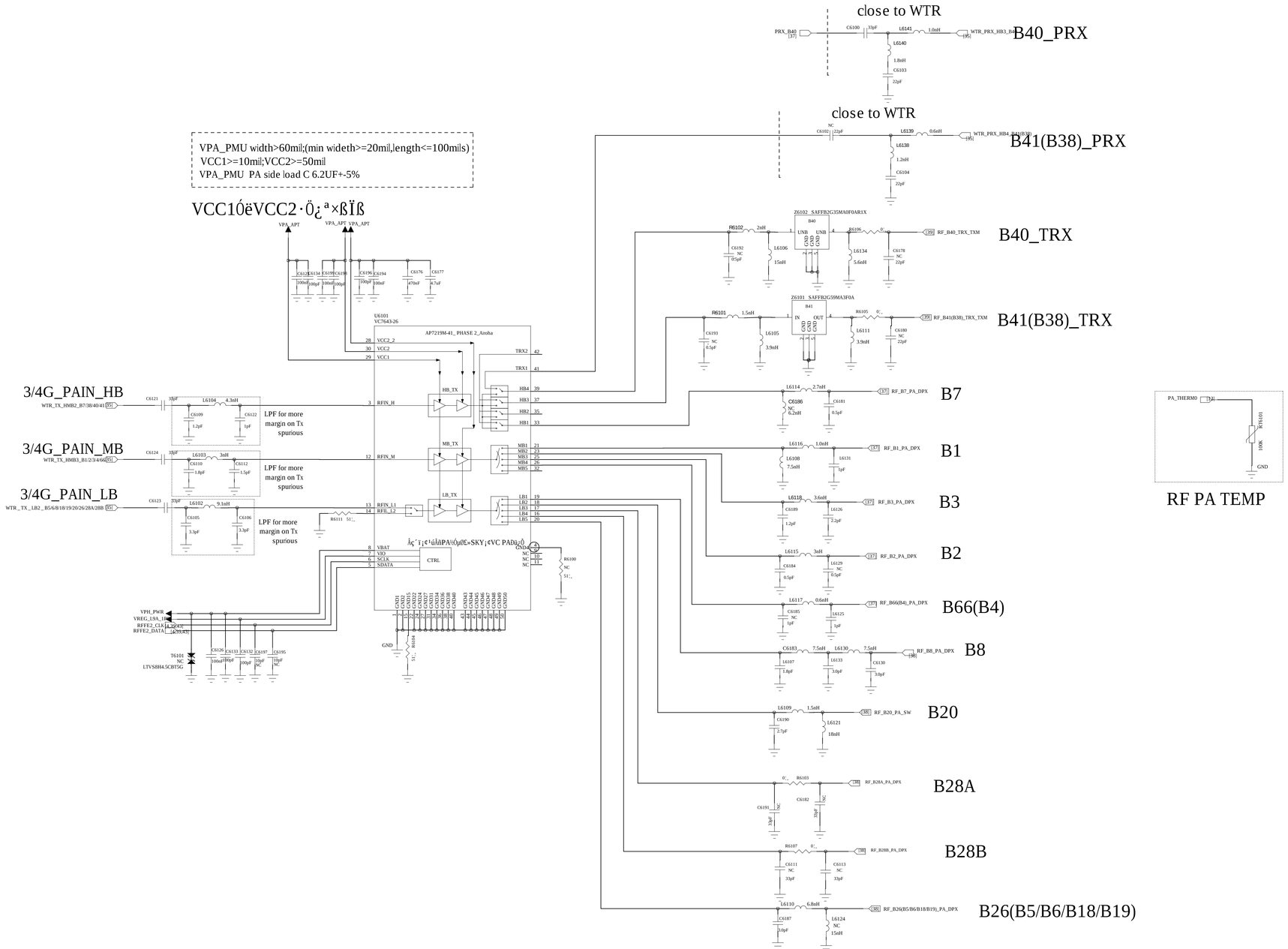

REVISION RECORD			
LTR	ECO NO:	APPROVED:	DATE:

DRAWN: jack.yi	DATED: 20200416	COMPANY: <Company Name>			
		TITLE: SM6115			
CHECKED: <Checked By>	DATED: <Checked Date>	CODE: P370AE	SIZE: D	DRAWING NO: P370AE	REV: V0.5
QUALITY CONTROL: <QC By>	DATED: <QC Date>				
RELEASED: <Released By>	DATED: <Release Date>	SCALE: <Scale>		SHEET: 36 46	

REVISION RECORD			
LTR	ECO NO:	APPROVED:	DATE:

B1 TRX

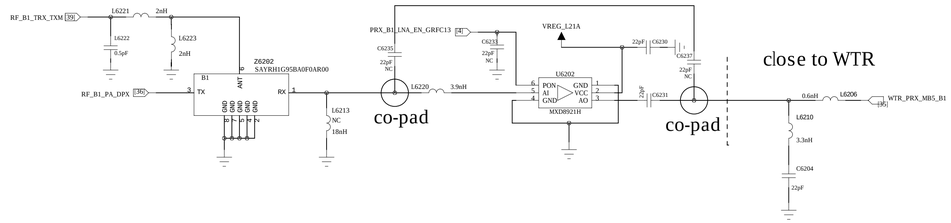

B66(B4) TRX

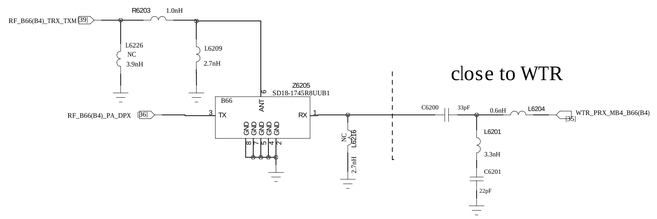

B2 TRX

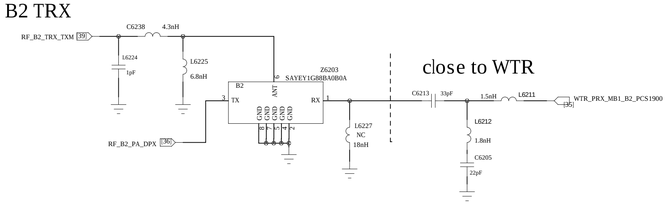

B3 TRX

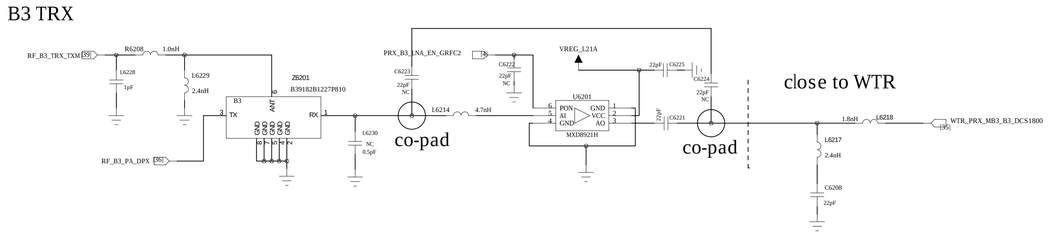

B7 TRX

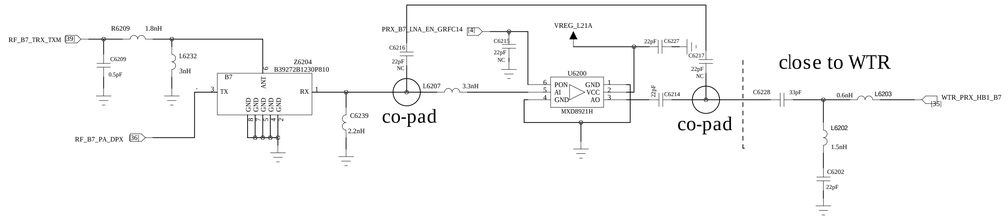

B40 PRX

DRAWN: jack.yi	DATED: 20200416	COMPANY: <Company Name>	
CHECKED: <Checked By>	DATED: <Checked Date>	TITLE: SM6115	
QUALITY CONTROL: <QC By>	DATED: <QC Date>	CODE: P370AE / SIZE: D / DRAWING NO: P370AE / REV: V0.5	
RELEASED: <Released By>	DATED: <Release Date>	SCALE: <Scale>	SHEET: 37 46

REVISION RECORD			
LTR	ECO NO:	APPROVED:	DATE:

B26(B5/B6/B18/B19) TRX

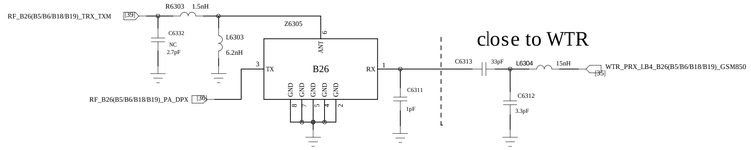

B8 TRX

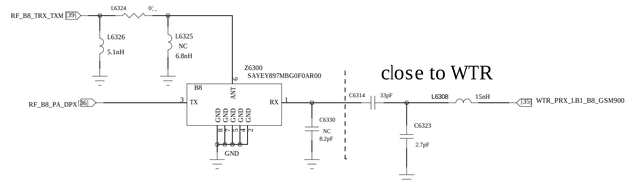

B20 TRX

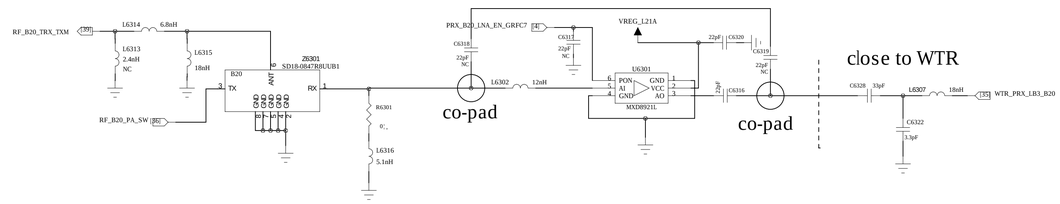

B28A TRX

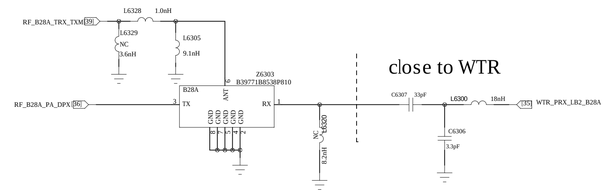

B28B TRX

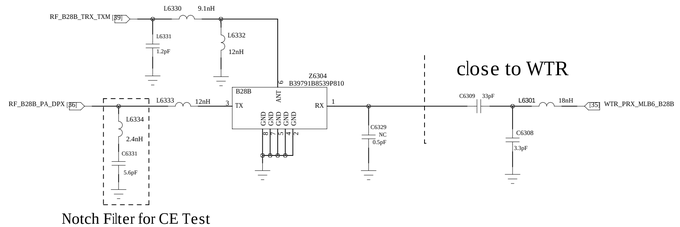

Notch Filter for CE Test

DRAWN: jack.yi	DATED: 20200416	COMPANY: <Company Name>	
CHECKED: <Checked By>	DATED: <Checked Date>	TITLE: PRI_TRX_DUPLEXER	
QUALITY CONTROL: <QC By>	DATED: <QC Date>	CODE: P370AE	SIZE: D
RELEASED: <Released By>	DATED: <Release Date>	DRAWING NO: P370AE	REV: V0.5
		SCALE: <Scale>	SHEET: 38 46

REVISION RECORD			
LTR	ECO NO:	APPROVED:	DATE:

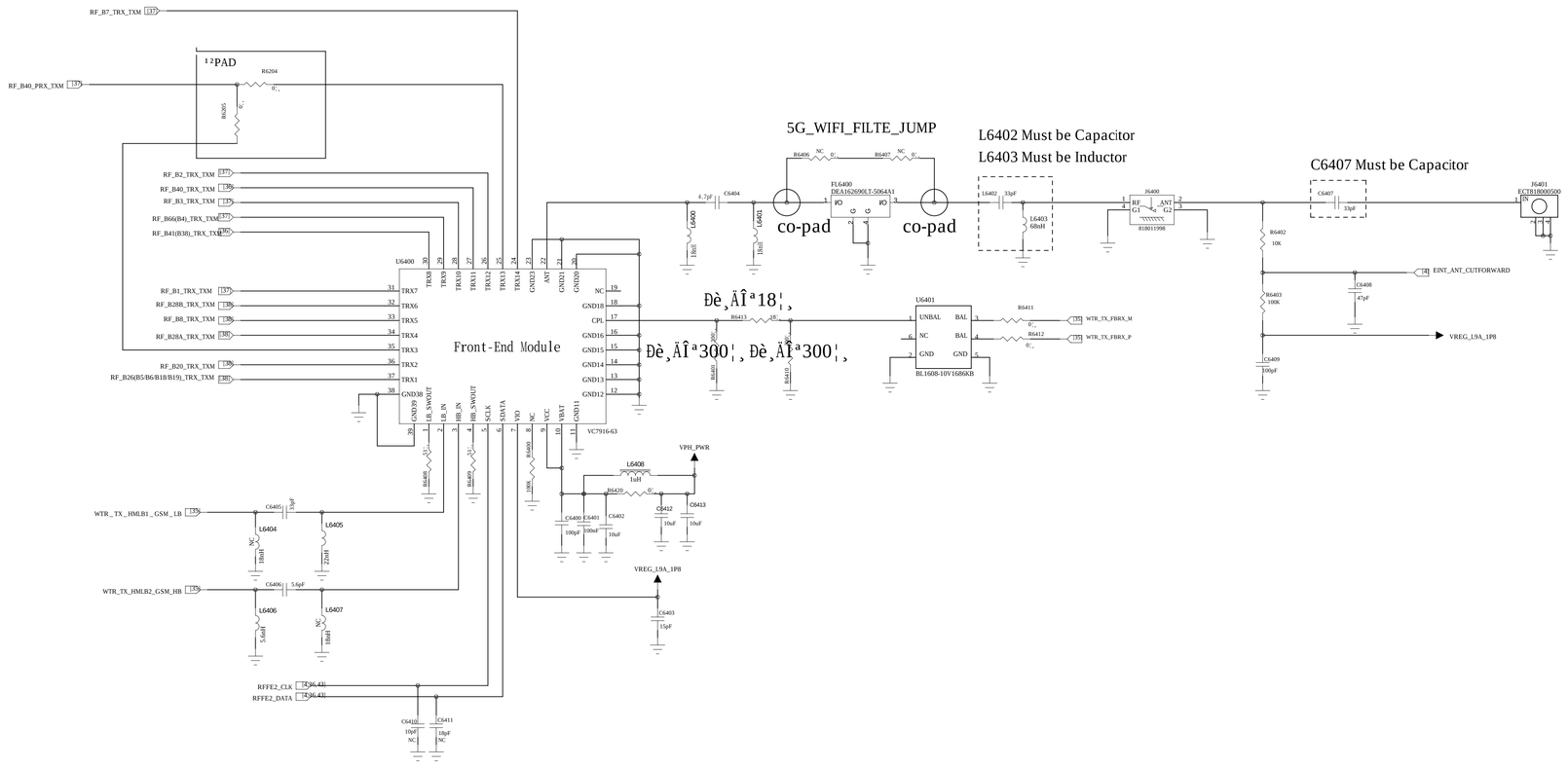

COMPANY: <Company Name>					
TITLE: DRX_ANT					
DRAWN: jack.yi	DATED: 20200416	CODE: P370AE	SIZE: D	DRAWING NO: P370AE	REV: V0.5
CHECKED: <Checked By>	DATED: <Checked Date>				
QUALITY CONTROL: <QC By>	DATED: <QC Date>				
RELEASED: <Released By>	DATED: <Release Date>	SCALE: <Scale>		SHEET: 39 46	

REVISION RECORD			
LTR	ECO NO:	APPROVED:	DATE:

DRX_ASM

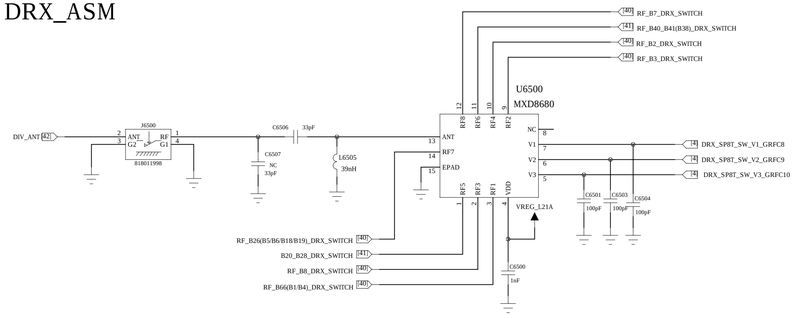

B66(B1/B4) DRX

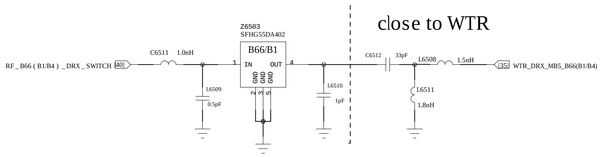

B26(B5/B6/B18/B19) DRX

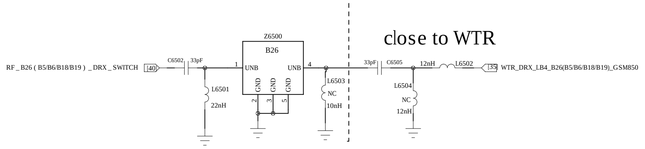

B2 DRX

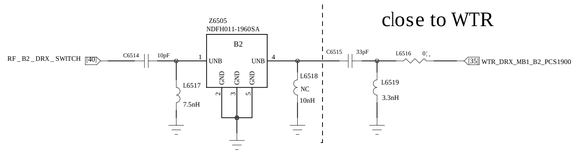

B7 DRX

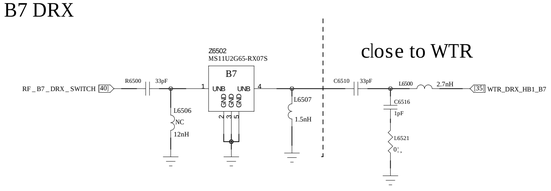

B3 DRX

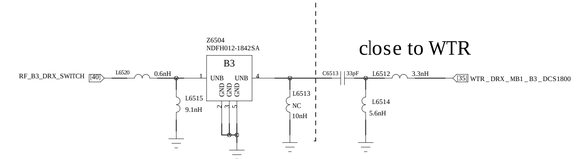

B8 DRX

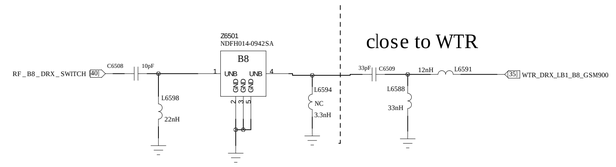

DRAWN: jack.yi	DATED: 20200416	COMPANY: <Company Name>			
CHECKED: <Checked By>	DATED: <Checked Date>	TITLE: DRX_ANT			
QUALITY CONTROL: <QC By>	DATED: <QC Date>	CODE: P370AE	SIZE: D	DRAWING NO: P370AE	REV: V0.5
RELEASED: <Released By>	DATED: <Release Date>	SCALE: <Scale>		SHEET: 40 46	

REVISION RECORD			
LTR	ECO NO:	APPROVED:	DATE:

B20/B28 DRX

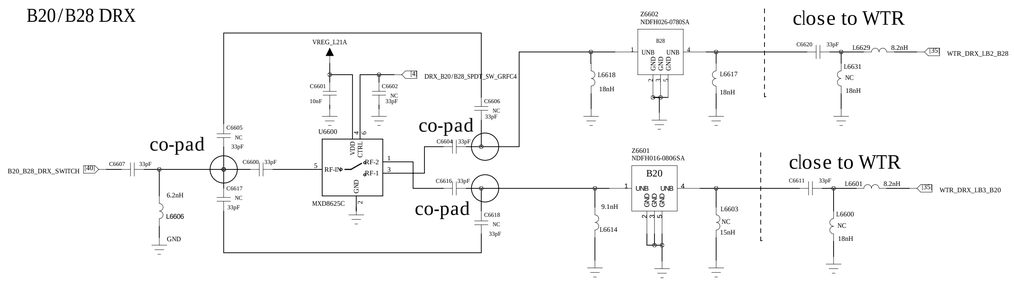

B40_B41(B38) DRX

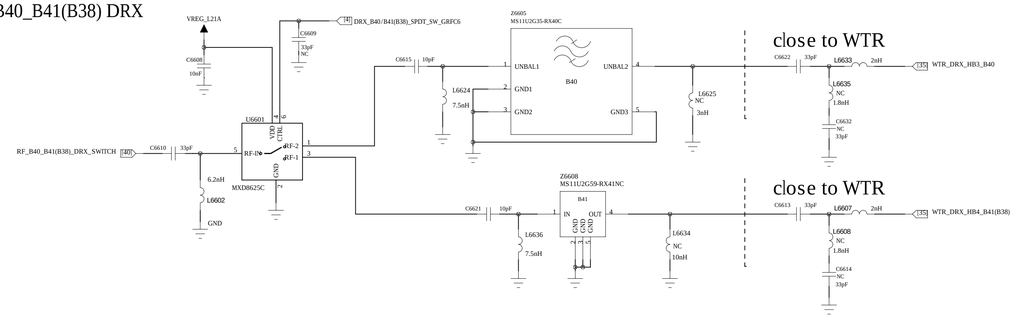

DRAWN: jack.yi	DATED: 20200416	COMPANY: <Company Name>	
CHECKED: <Checked By>	DATED: <Checked Date>	TITLE: RF_PWR_ET_APT	
QUALITY CONTROL: <QC By>	DATED: <QC Date>	CODE: P370AE / SIZE: D / DRAWING NO: P370AE / REV: V0.5	
RELEASED: <Released By>	DATED: <Release Date>	SCALE: <Scale>	SHEET: 46

REVISION RECORD			
LTR	ECO NO:	APPROVED:	DATE:

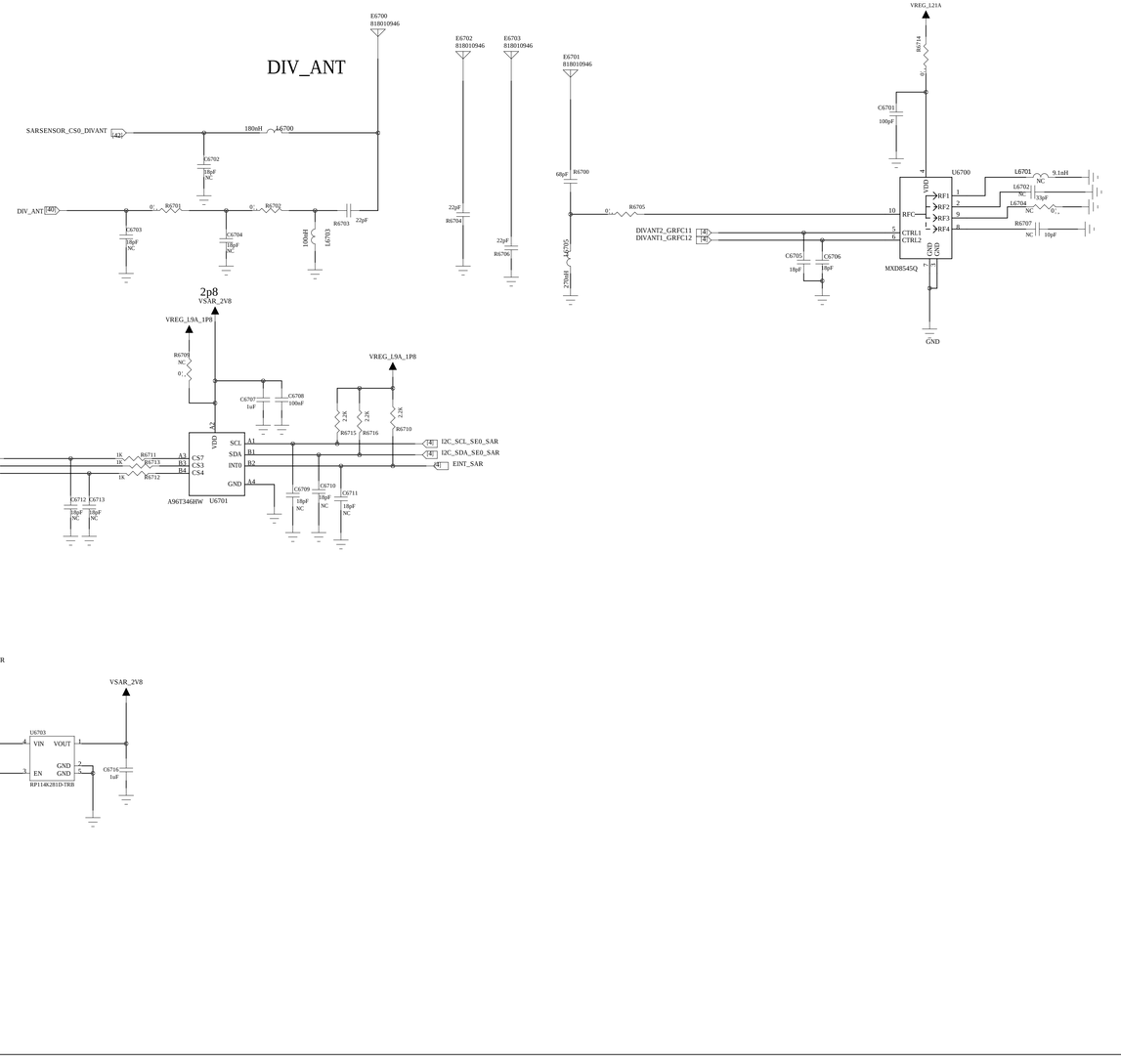

		COMPANY:	<Company Name>
		TITLE:	SM6115
DRAWN: jack.yi	DATED: 20200416		
CHECKED: <Checked By>	DATED: <Checked Date>	CODE: P370AE	SIZE: D
QUALITY CONTROL: <QC By>	DATED: <QC Date>	DRAWING NO: P370AE	REV: V0.5
RELEASED: <Released By>	DATED: <Release Date>	SCALE: <Scale>	SHEET: 42 46

REVISION RECORD			
LTR	ECO NO:	APPROVED:	DATE:

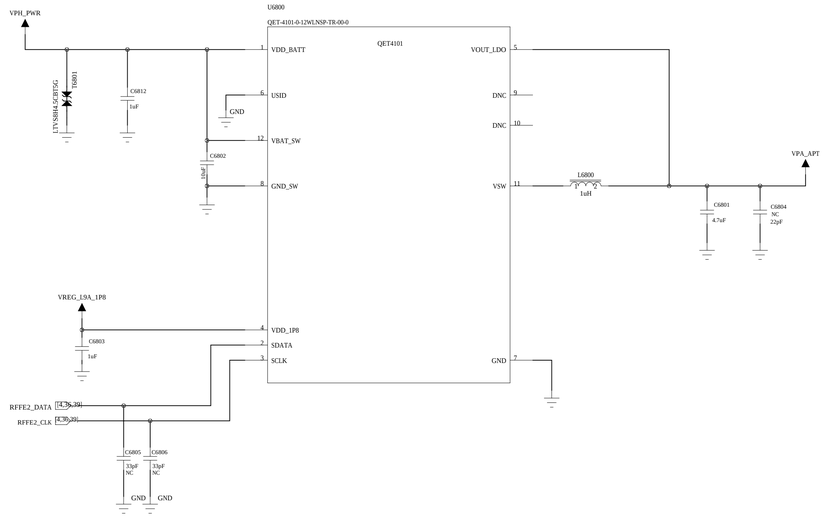

DRAWN: jack.yi	DATED: 20200416	COMPANY: <Company Name>			
		TITLE: SM6115			
CHECKED: <Checked By>	DATED: <Checked Date>	CODE: P370AE	SIZE: D	DRAWING NO: P370AE	REV: V0.5
QUALITY CONTROL: <QC By>	DATED: <QC Date>				
RELEASED: <Released By>	DATED: <Release Date>	SCALE: <Scale>		SHEET: 43 46	

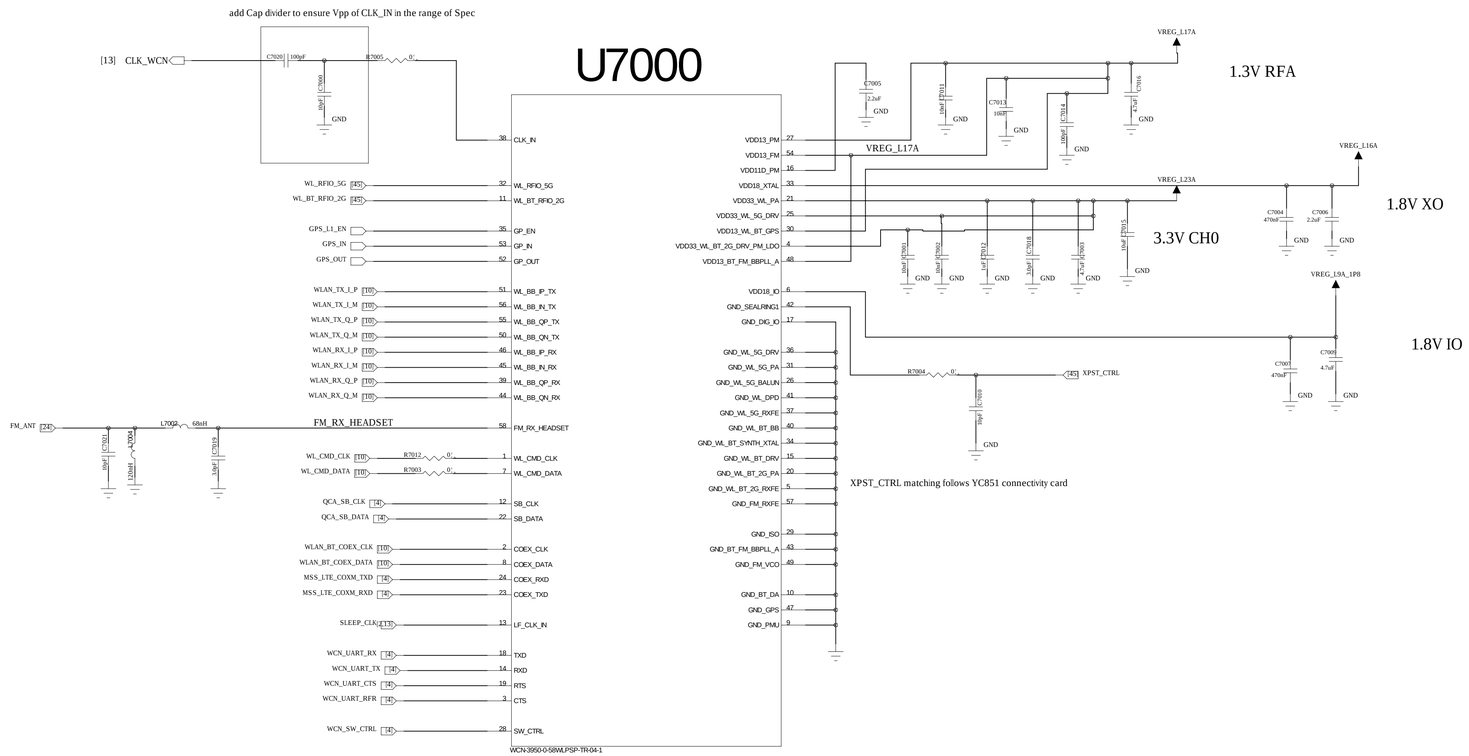

REVISION RECORD			
LTR	ECO NO:	APPROVED:	DATE:

DRAWN: jack.yi	DATED: 20200416	COMPANY: <Company Name>			
CHECKED: <Checked By>	DATED: <Checked Date>	TITLE: SM6115			
QUALITY CONTROL: <QC By>	DATED: <QC Date>	CODE: P370AE	SIZE: D	DRAWING NO: P370AE	REV: V0.5
RELEASED: <Released By>	DATED: <Release Date>	SCALE: <Scale>		SHEET: 44 46	

REVISION RECORD			
LTR	ECO NO:	APPROVED:	DATE:

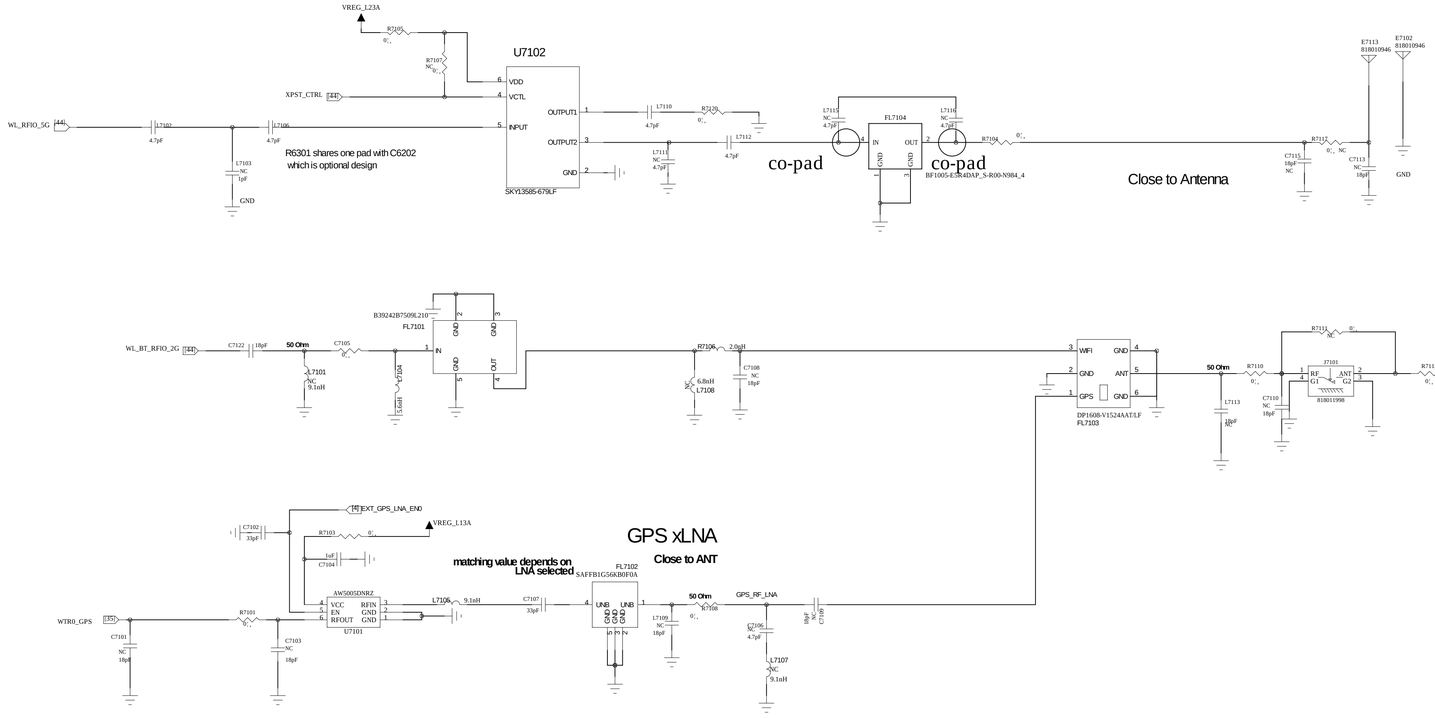

DRAWN: jack.yi	DATED: 20200416	COMPANY: <Company Name>	
CHECKED: <Checked By>	DATED: <Checked Date>	TITLE: SM6115	
QUALITY CONTROL: <QC By>	DATED: <QC Date>	CODE: P370AE / SIZE: D / DRAWING NO: P370AE / REV: V0.5	
RELEASED: <Released By>	DATED: <Release Date>	SCALE: <Scale>	SHEET: 45 46

REVISION RECORD			
LTR	ECO NO:	APPROVED:	DATE:

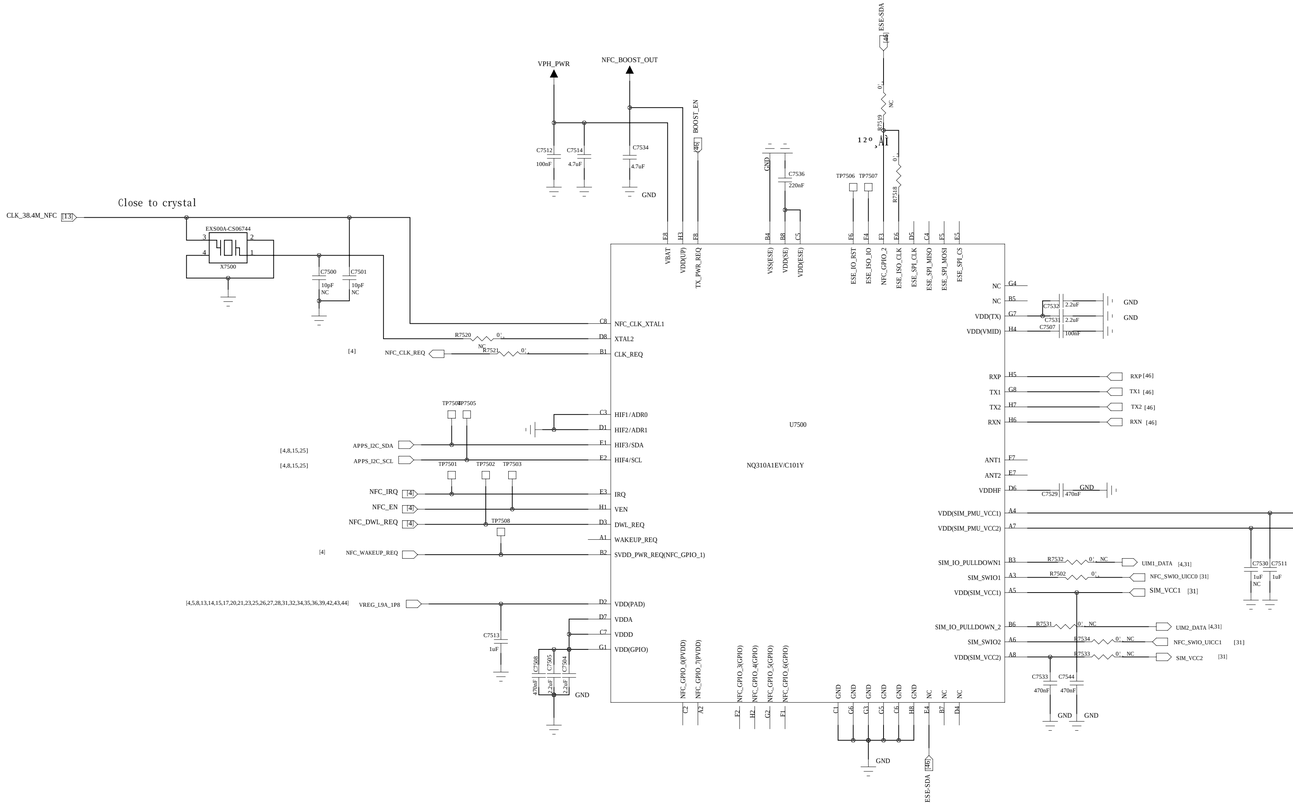

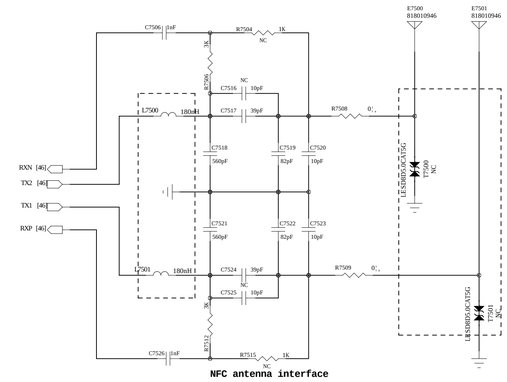

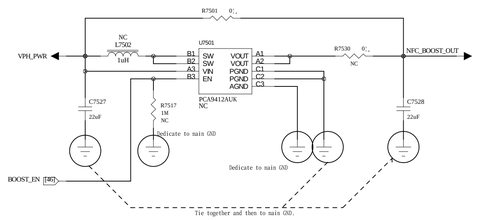

COMPANY: <Company Name>			
TITLE: SM6115			
DRAWN: jack.yi	DATED: 20200416		
CHECKED: <Checked By>	DATED: <Checked Date>	CODE: P370AE	SIZE: D
QUALITY CONTROL: <QC By>	DATED: <QC Date>	DRAWING NO: P370AE	REV: V0.5
RELEASED: <Released By>	DATED: <Release Date>	SCALE: <Scale>	SHEET: 46 46