Sheet #	Content	Sheet #	Content
01.	Table of Content	36.	BAT/B2B Connetor
02.	Revision History	37.	JTAG/Test Point/Sheild
03.	Block Diagram	38.	WTR 3925 TX GND
04.	GPIO MAP	39.	WTR 3925 PRX DRX
05.	SDM632 Control	40.	WTR 3925 POWER
06.	SDM632 EBI	41.	QPA4361
07.	SDM632 GPIO	42.	TRx LB
08.	SDM632 MIPI	43.	TRx MB
09.	SDM632 RF	44.	TRx MHB
10.	SDM632 POWER1	45.	QSW8574
11.	SDM632 POWER2	46.	QET4101
12.	SDM632 GND	47.	ASD
13.	PMI632 Charger	48.	DRx
14.	PMI632 Control/Interface	49.	RESERVED
15.	PM632 Control/Interface	50.	RESERVED
16.	PM632 SMPS	51.	RESERVED
17.	PM632 LDO	52.	ANT
18.	PM632 CODEC/Audio PA	53.	WCN3680B
19.	PM8004-1 CONTROL	54.	WLAN_FEM
20.	PM8004-1 VREG	55.	GPS
21.	RESERVED	56.	RESERVED
22.	RESERVED	57.	RESERVED
23.	SMB1355	58.	NFC
24.	RESERVED	59.	Change list
25.	MEMORY(LPDDR3+EMMC V5.1)		
26.	RESERVED		
27.	Audio DISC Parts		
28.	RESERVED		
29.	WSA		
30.	Display I/F and Backlight		
31.	Front Camera and LDOs		
32.	Rear Camera/Flash		
33.	Sensor		
34.	SIM/TF card		
35.	Keypad and Indicator		

Title: Page Name = Table of Content
REV: V10
DOCUMENT NO.: Design Name + 8976_1_13974_20180830135726
Size: D
DEPARTMENT: DEPARTMENT = DIRECTION1A5
Sheet 1 of 62

LanSOFT
EXCLUSIVO PARA TÉCNICOS

Revision History

REV	DESCRIPTION
A	EVT1.2 release. The detailed change refer to item 29 to 34 on page <Change list>.

Board Change History

SCHEMATIC MCN	HW VERSION	REVISION	DESCRIPTION OF CHANGE
LD20-PF494-11	EVT1.0	A	Preliminary release for early reference.
		B	The detailed change refer to item 1 to 8 on page <Change list>.
		C	The detailed change refer to item 9 to 18 on page <Change list>.
LD20-PF494-12	EVT1.1	A	The detailed change refer to item 19 to 26 on page <Change list>.
		B	The detailed change refer to item 27 to 28 on page <Change list>.
LD20-PF494-13	EVT1.2	A	The detailed change refer to item 29 to 34 on page <Change list>.

CanSOFT
EXCLUSIVO PARA TÉCNICOS

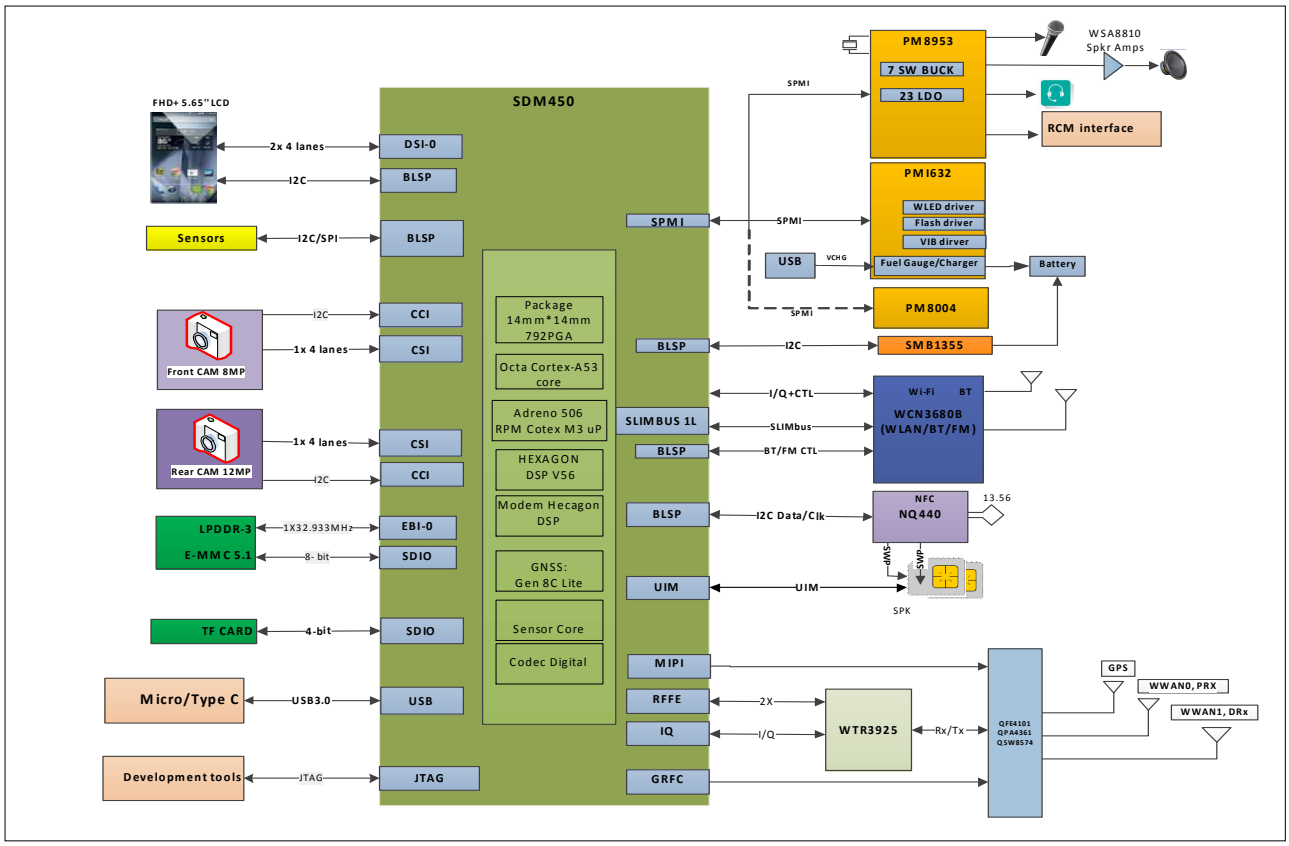

LanSOFT
EXCLUSIVO PARA TÉCNICOS

SDM450 GPIO Configuration For QRD450+PMI632

GPIO_0		GPIO_41	DTV_EN	GPIO_82	FM_DATA
GPIO_1		GPIO_42	ACC_GYRO_INT1	GPIO_83	BT_CTL
GPIO_2	PD_I2C_SDA	GPIO_43	ALSP_INT	GPIO_84	BT_DATA
GPIO_3	PD_I2C_SCL	GPIO_44		GPIO_85	KEY_VOL_UP_N
GPIO_4	UART_TX_2	GPIO_45	ACC_GYRO_INT2	GPIO_86	SAR_PS_INT
GPIO_5	UART_RX_2	GPIO_46		GPIO_87	ANT_MATCH_H
GPIO_6	SAR_SPA_I2C_SDA	GPIO_47		GPIO_88	SPKPA_I2S_DATAI
GPIO_7	SAR_SPA_I2C_SCL	GPIO_48	FP_INT	GPIO_89	DTV_RST
GPIO_8	FP_RST_N	GPIO_49	UIM_BATT_ALARM	GPIO_90	
GPIO_9	CC_INT	GPIO_50	CAM_DVDD_EN	GPIO_91	SPKPA_I2S_BCK
GPIO_10	TP_I2C_SDA	GPIO_51	UIM1_DATA	GPIO_92	SPKPA_I2S_LRCK
GPIO_11	TP_I2C_SCL	GPIO_52	UIM1_CLK	GPIO_93	SPKPA_I2S_DATAO
GPIO_12	FP_LDOEN_3V3	GPIO_53	UIM1_RESET	GPIO_94	AUDIO_PA_RST
GPIO_13		GPIO_54	UIM1_PRESENT	GPIO_95	TP_LDO_1V8_EN
GPIO_14	SENSOR_I2C_SDA	GPIO_55	UIM2_DATA	GPIO_96	FP_SPI_MOSI
GPIO_15	SENSOR_I2C_SCL	GPIO_56	UIM2_CLK	GPIO_97	FP_SPI_MISO
GPIO_16	NFC_DISABLE	GPIO_57	UIM2_RESET	GPIO_98	FP_SPI_CS
GPIO_17	NFC_IRQ	GPIO_58	UIM2_PRESENT	GPIO_99	FP_SPI_CLK
GPIO_18	NFC_LCD_I2C_SDA	GPIO_59	SPK/REC_SW_EN	GPIO_100	
GPIO_19	NFC_LCD_I2C_SCL	GPIO_60		GPIO_101	GRFC1_SEL
GPIO_20	SENSOR_SPI_MOSI	GPIO_61	LCD_RST	GPIO_102	GRFC2_SEL
GPIO_21	SENSOR_SPI_MISO	GPIO_62		GPIO_103	GRFC3_SEL
GPIO_22	SENSOR_SPI_CS0_N	GPIO_63	SPKPA_INT	GPIO_104	
GPIO_23	SENSOR_SPI_CLK	GPIO_64	TP_RST	GPIO_105	
GPIO_24	LCD_TE	GPIO_65	TP_IN	GPIO_106	WDOG_DISABLE
GPIO_25	LCD_ID1	GPIO_66	LCD_ID0	GPIO_107	GRFC7_SEL
GPIO_26	CAM_MCLK0	GPIO_67	CDC_PDM_RX0_COMP	GPIO_108	GRFC8_SEL
GPIO_27	CAM_MCLK1	GPIO_68	CDC_PDM_RX1_COMP	GPIO_109	
GPIO_28		GPIO_69	CDC_PDM_CLK	GPIO_110	GRFC10_SEL
GPIO_29	CAM_I2C_SDA0	GPIO_70	CDC_PDM_SYNC	GPIO_111	GRFC11_SEL
GPIO_30	CAM_I2C_SCL0	GPIO_71	CDC_PDM_TX	GPIO_112	GRFC12_SEL
GPIO_31	CAM_I2C_SDA1	GPIO_72	CDC_PDM_RX0	GPIO_113	
GPIO_32	CAM_I2C_SCL1	GPIO_73	CDC_PDM_RX1	GPIO_114	GRFC14_SEL
GPIO_33		GPIO_74	CDC_PDM_RX2	GPIO_115	GRFC15_SEL
GPIO_34	FLASH_STROBE_NOW	GPIO_75	BT_SSBI	GPIO_116	EXT_GPS_LNA_EN
GPIO_35	CAM_AVDD_EN	GPIO_76	WL_CMD_DATA_2	GPIO_117	CH0_GSM_TX_PHASE_D0
GPIO_36	FP_LDOEN_1V8	GPIO_77	WL_CMD_DATA_1	GPIO_118	RFFE1_CLK
GPIO_37	FORCED_USB_BOOT	GPIO_78	WL_CMD_DATA_0	GPIO_119	RFFE1_DATA
GPIO_38	GPIO38_DTV_EINT	GPIO_79	WL_CMD_SET	GPIO_120	RFFE2_CLK
GPIO_39	REAR_MCAM_PWDN	GPIO_80	WL_CMD_CLK	GPIO_121	RFFE2_DATA
GPIO_40		GPIO_81	FM_SSBI	GPIO_122	
GPIO_123		GPIO_134	BOARD_ID2		
GPIO_124	RFFE5_CLK	GPIO_135	DTV_SPI_CLK		
GPIO_125	RFFE5_DATA	GPIO_136	DTV_SPI_CS_N		
GPIO_126		GPIO_137	DTV_SPI_MOSI		
GPIO_127		GPIO_138	DTV_SPI_MISO		
GPIO_128	SPK/REC_SW_IN	GPIO_139	USB_SS_SEL		
GPIO_129		GPIO_140			
GPIO_130	FRONT_CAM_RST	GPIO_141			
GPIO_131	BOARD_ID1				
GPIO_132					
GPIO_133	SDCARD_DET_N				

PMI632 GPIO/MPP Configuration

GPIO_1	TYPE_C_CON_THERMAL	GPIO_5	
GPIO_2		GPIO_6	NEBULA_PWM
GPIO_3	QUITE_THERMAL	GPIO_7	
GPIO_4	FLASH_STROBE_NOW	GPIO_8	

PM8953 GPIO/MPP Configuration

GPIO_1		MPP_1	VDD_PX_BIAS_MPP_1
GPIO_2	NFC_CLK_REQ	MPP_2	CHG_THERM
GPIO_3	UIM_BATT_ALARM	MPP_3	VREF_DAC_MPP_3
GPIO_4	WLED_EN	MPP_4	MSM_THERM
GPIO_5			
GPIO_6	VIB_RST_N		
GPIO_7			
GPIO_8	LCD_BL_PWM		

GPIO TABLE

Title: Page Name = Page Name_alias — VER:
DOCUMENT NO.: Design Name = 80018_1_1_0000_20180830170... Size: B
DEPARTMENT: DEPARTMENT = WINGTECH DESIGNER: DESIGNER = YANGHONGYUN
WINGTECH
Sheet: Page Modify Date = Thursday, August 30, 2018 4 of 62

SOFT EXCLUSIVO PARA TÉCNICOS

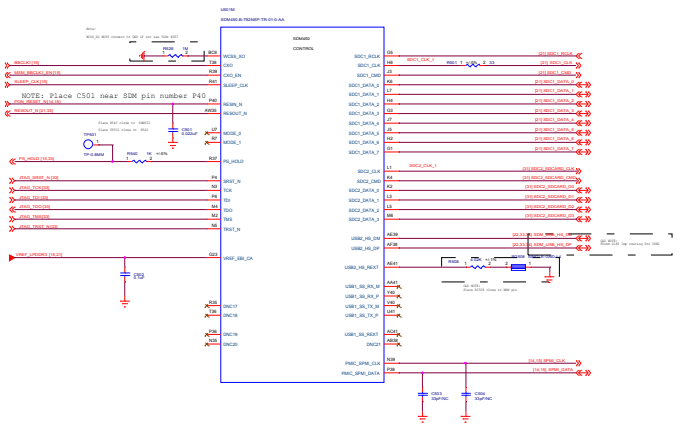

SoftSOFT
EXCLUSIVO PARA TÉCNICOS

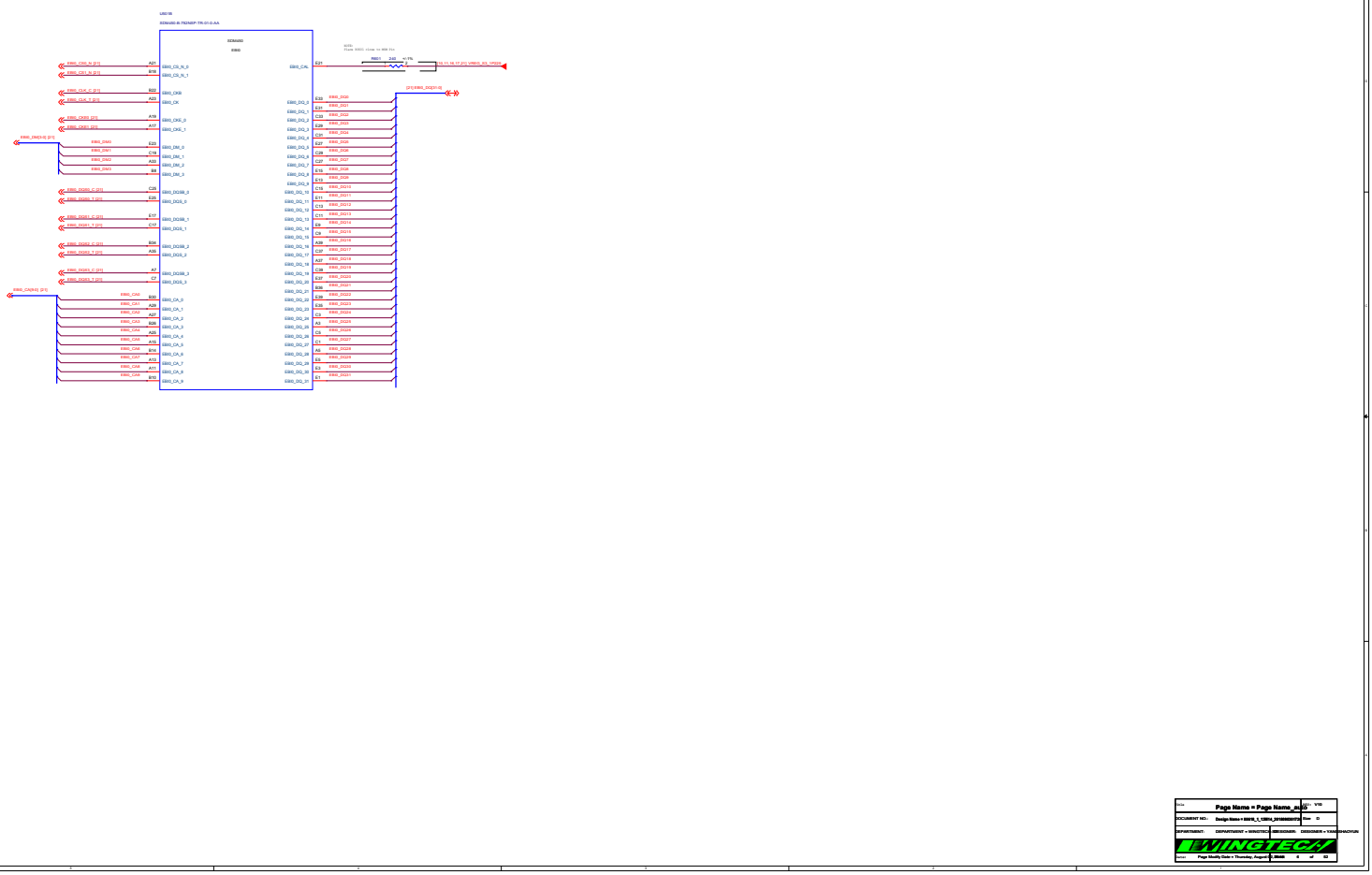

Size	Page Name = Page Name_a.U0		V1B
DOCUMENT NO.:	Design Name = EBI0_1_1280x_0416B0000TN		Rev D
DEPARTMENT:	DEPARTMENT = WINGTECH	DESIGNER:	DESIGNER = YAMEISHAOYUN
Sheet	Page Modify Date = Thursday, August 31, 0000	6	of 53

WINGTECH

lanSOFT
EXCLUSIVO PARA TÉCNICOS

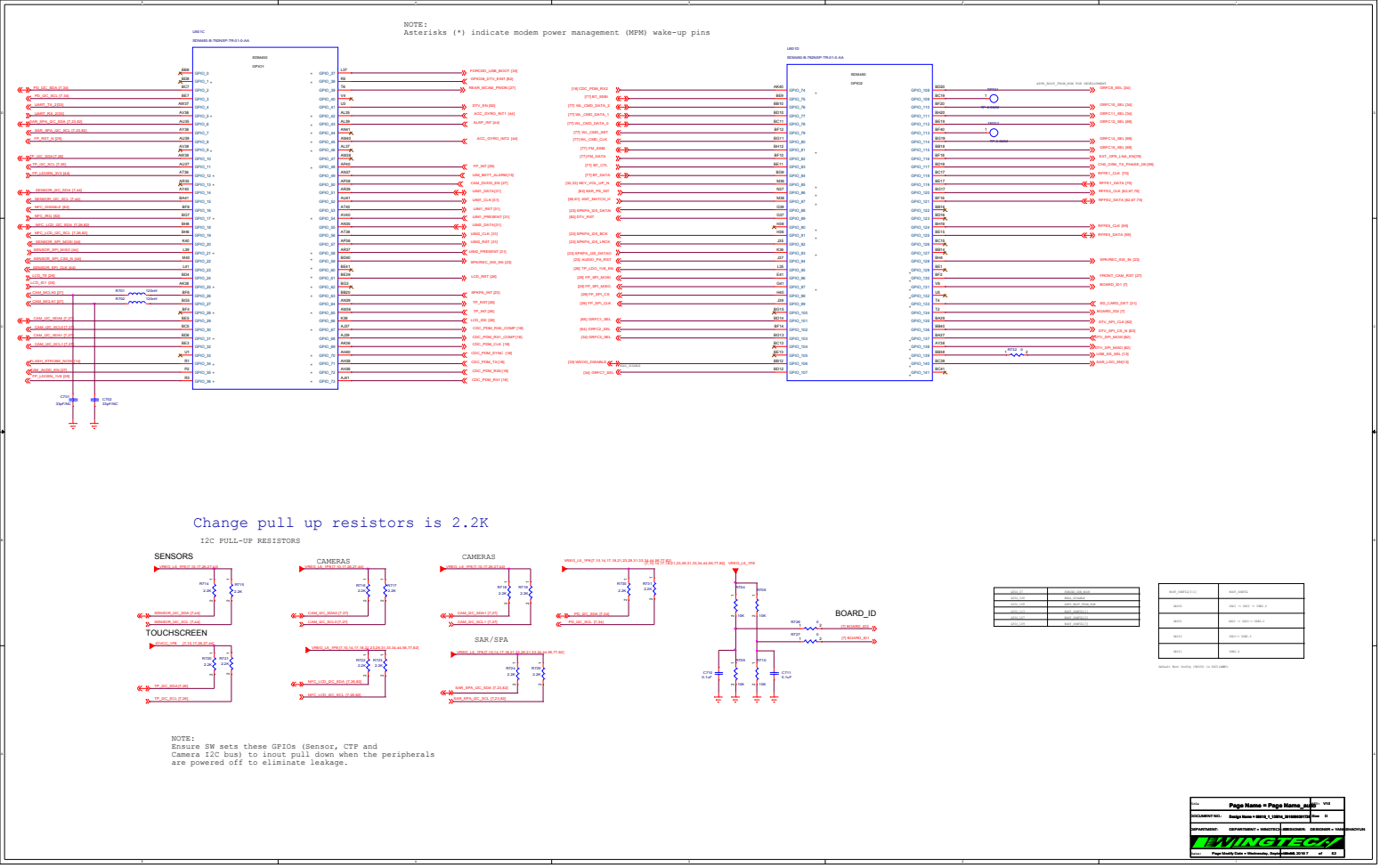

lanSOFT
EXCLUSIVO PARA TÉCNICOS

CSI Pin Name	CSI DPHY 4-lane	CSI DPHY 2+1 Mode	CSI CPHY 3Phase Mode
CSI0_3PHASE_PIN0	CSI0_CLKP	CSI0_2LANE_CLKP	NC
CSI0_3PHASE_PIN1	CSI0_CLKN	CSI0_2LANE_CLKN	CSI0_TRI0_A
CSI0_3PHASE_PIN2	CSI0_DP0	CSI0_2LANE_DP0	CSI0_TRI0_B
CSI0_3PHASE_PIN3	CSI0_DN0	CSI0_2LANE_DN0	CSI0_TRI0_C
CSI0_3PHASE_PIN4	CSI0_DP1	CSI0_2LANE_DP1	CSI0_TRI1_A
CSI0_3PHASE_PIN5	CSI0_DN1	CSI0_2LANE_DN1	CSI0_TRI1_B
CSI0_3PHASE_PIN6	CSI0_DP2	CSI0_1LANE_DP0	CSI0_TRI1_C
CSI0_3PHASE_PIN7	CSI0_DN2	CSI0_1LANE_DN0	CSI0_TRI2_A
CSI0_3PHASE_PIN8	CSI0_DP3	CSI0_1LANE_CLKP	CSI0_TRI2_B
CSI0_3PHASE_PIN9	CSI0_DN3	CSI0_1LANE_CLKN	CSI0_TRI2_C
CSI1_3PHASE_PIN0	CSI1_CLKP	CSI1_2LANE_CLKP	NC
CSI1_3PHASE_PIN1	CSI1_CLKN	CSI1_2LANE_CLKN	CSI1_TRI0_A
CSI1_3PHASE_PIN2	CSI1_DP0	CSI1_2LANE_DP0	CSI1_TRI0_B
CSI1_3PHASE_PIN3	CSI1_DN0	CSI1_2LANE_DN0	CSI1_TRI0_C
CSI1_3PHASE_PIN4	CSI1_DP1	CSI1_2LANE_DP1	CSI1_TRI1_A
CSI1_3PHASE_PIN5	CSI1_DN1	CSI1_2LANE_DN1	CSI1_TRI1_B
CSI1_3PHASE_PIN6	CSI1_DP2	CSI1_1LANE_DP0	CSI1_TRI1_C
CSI1_3PHASE_PIN7	CSI1_DN2	CSI1_1LANE_DN0	CSI1_TRI2_A
CSI1_3PHASE_PIN8	CSI1_DP3	CSI1_1LANE_CLKP	CSI1_TRI2_B
CSI1_3PHASE_PIN9	CSI1_DN3	CSI1_1LANE_CLKN	CSI1_TRI2_C
CSI2_3PHASE_PIN0	CSI2_CLKP	CSI2_2LANE_CLKP	NC
CSI2_3PHASE_PIN1	CSI2_CLKN	CSI2_2LANE_CLKN	CSI2_TRI0_A
CSI2_3PHASE_PIN2	CSI2_DP0	CSI2_2LANE_DP0	CSI2_TRI0_B
CSI2_3PHASE_PIN3	CSI2_DN0	CSI2_2LANE_DN0	CSI2_TRI0_C
CSI2_3PHASE_PIN4	CSI2_DP1	CSI2_2LANE_DP1	CSI2_TRI1_A
CSI2_3PHASE_PIN5	CSI2_DN1	CSI2_2LANE_DN1	CSI2_TRI1_B
CSI2_3PHASE_PIN6	CSI2_DP2	CSI2_1LANE_DP0	CSI2_TRI1_C
CSI2_3PHASE_PIN7	CSI2_DN2	CSI2_1LANE_DN0	CSI2_TRI2_A
CSI2_3PHASE_PIN8	CSI2_DP3	CSI2_1LANE_CLKP	CSI2_TRI2_B
CSI2_3PHASE_PIN9	CSI2_DN3	CSI2_1LANE_CLKN	CSI2_TRI2_C

LanSOFT
EXCLUSIVO PARA TÉCNICOS

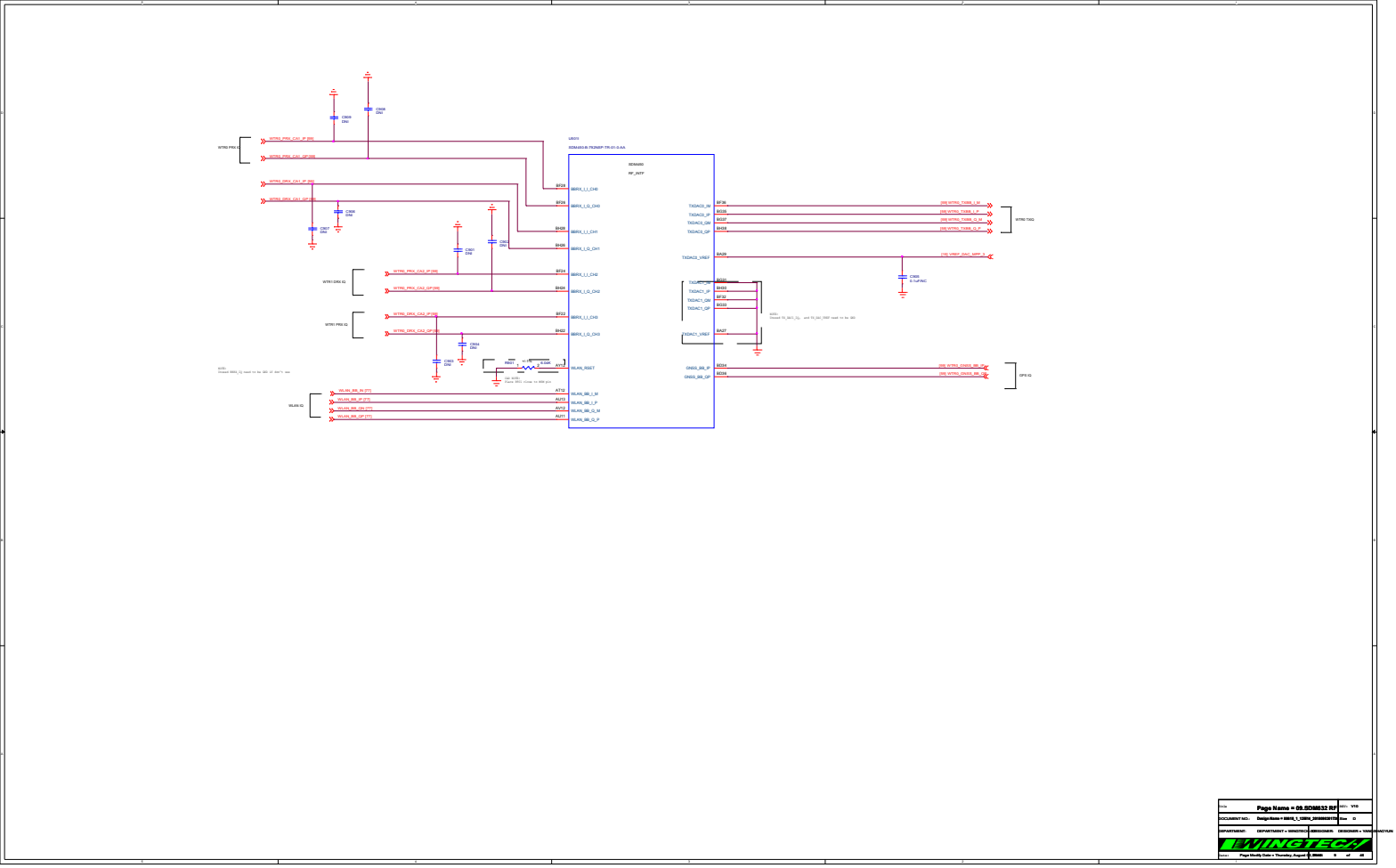

Title	Page Name = 09.SDM632 RF	REV.	V10
DOCUMENT NO.:	Design Name = 8916_1_1200_SDM632 RF	Size	D
DEPARTMENT:	DEPARTMENT = SENSITIVO	DESIGNER:	DESIGNER = VANCHAKOTUN
	WINGTECH		
Sheet	Page Modify Date = Thursday, August 01, 2013	6	of 48

LanSOFT
EXCLUSIVO PARA TÉCNICOS

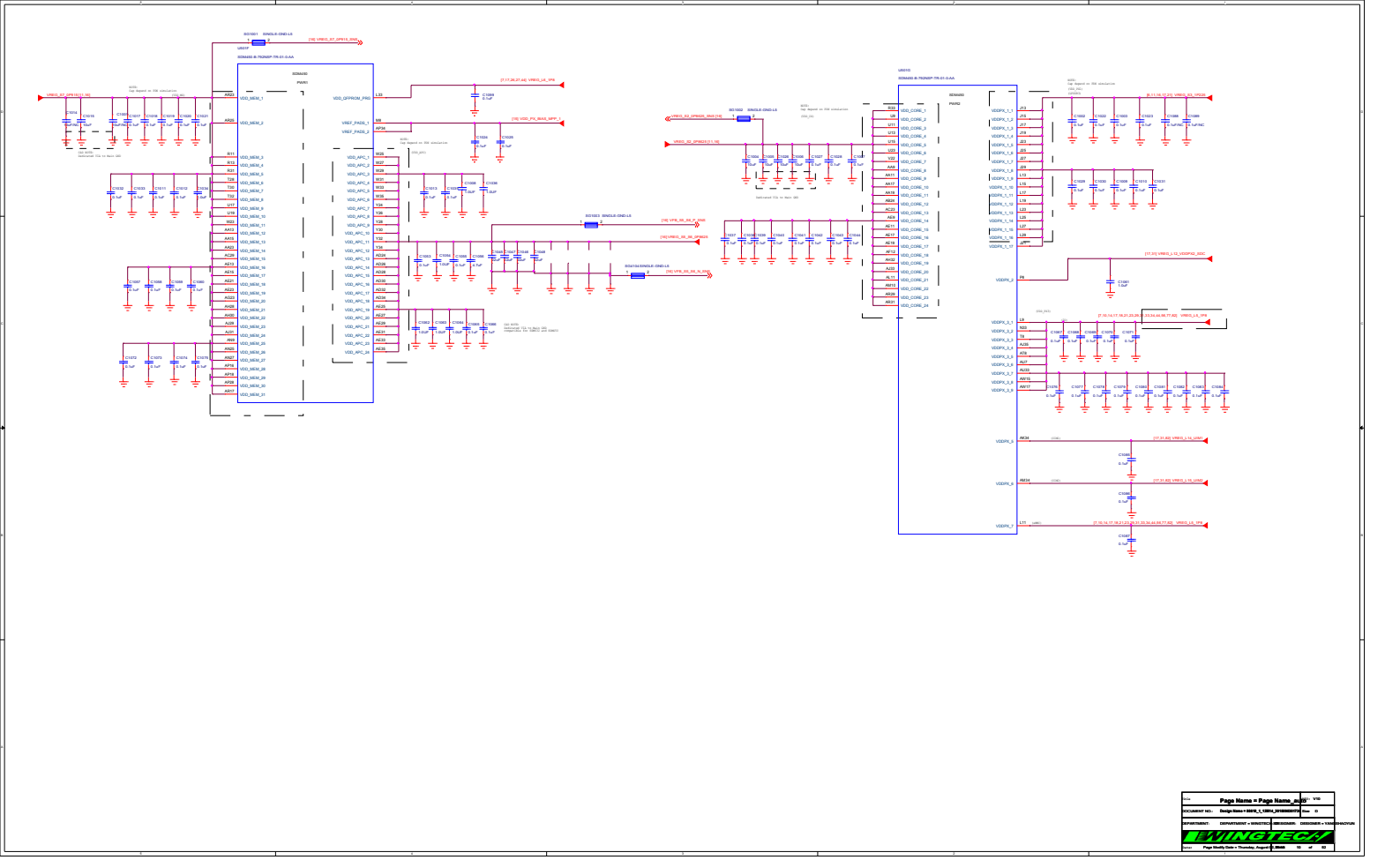

LanSOFT
EXCLUSIVO PARA TÉCNICOS

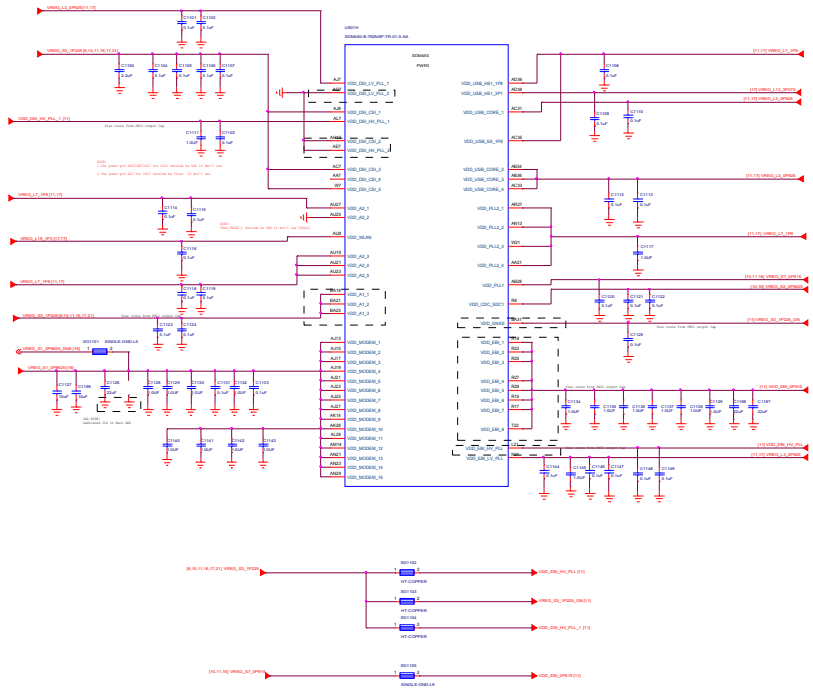

Title	Page Name = SDM450 POWER2	Size	V10
DOCUMENT NO	Design Name = SDM4_1_1SR14_20100000T38	Rev	D
DEPARTMENT/DEPARTMENT = WINGTECH-XA		DESIGNER	DESIGNER = SONGCHIQUO
WINGTECH			
Date	Page Modify Date = Sunday, September	SDM450	11 of 32

LanSOFT
EXCLUSIVO PARA TÉCNICOS

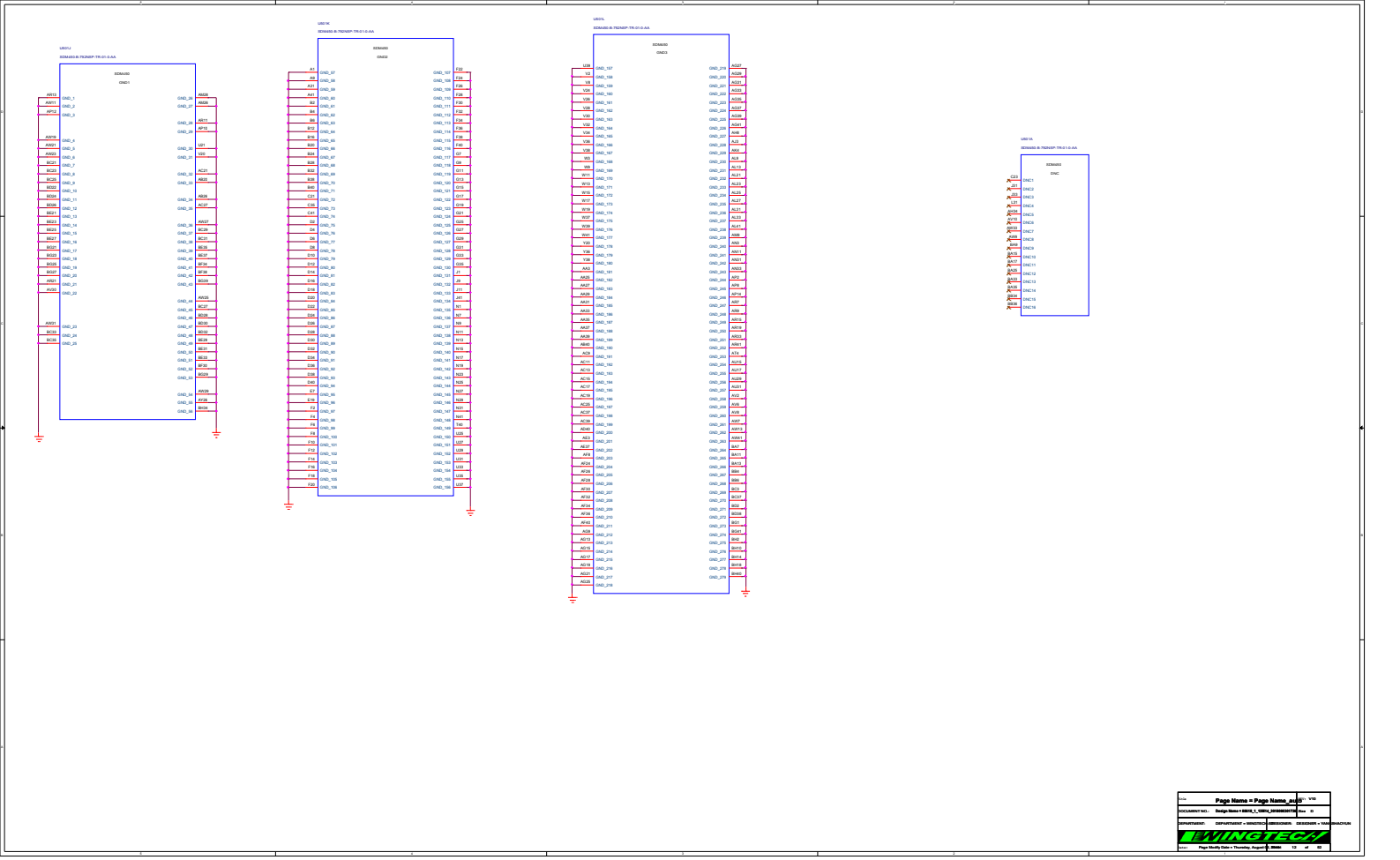

EXCLUSIVO PARA TÉCNICOS

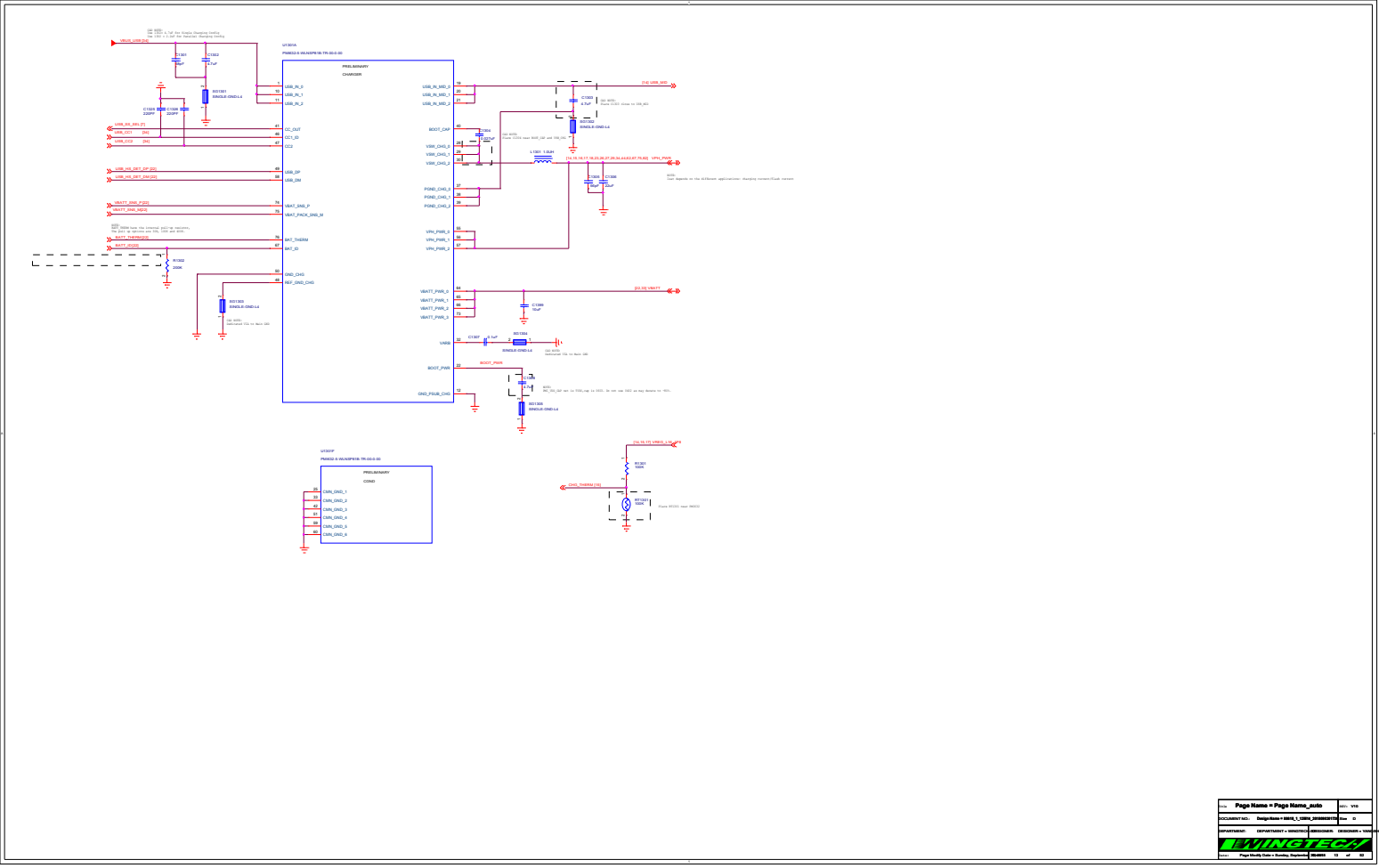

LanSOFT
EXCLUSIVO PARA TÉCNICOS

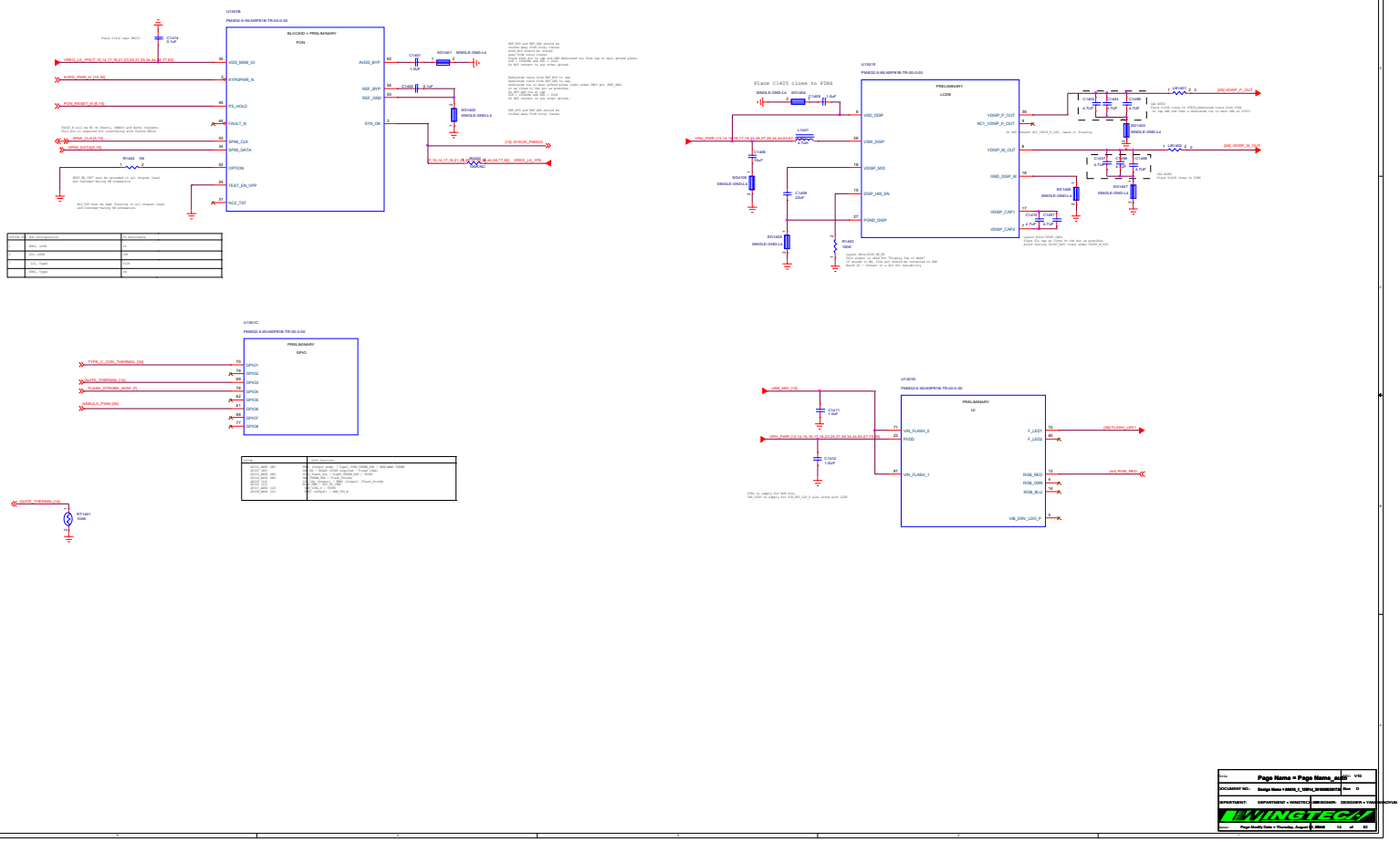

LanSOFT
EXCLUSIVO PARA TÉCNICOS

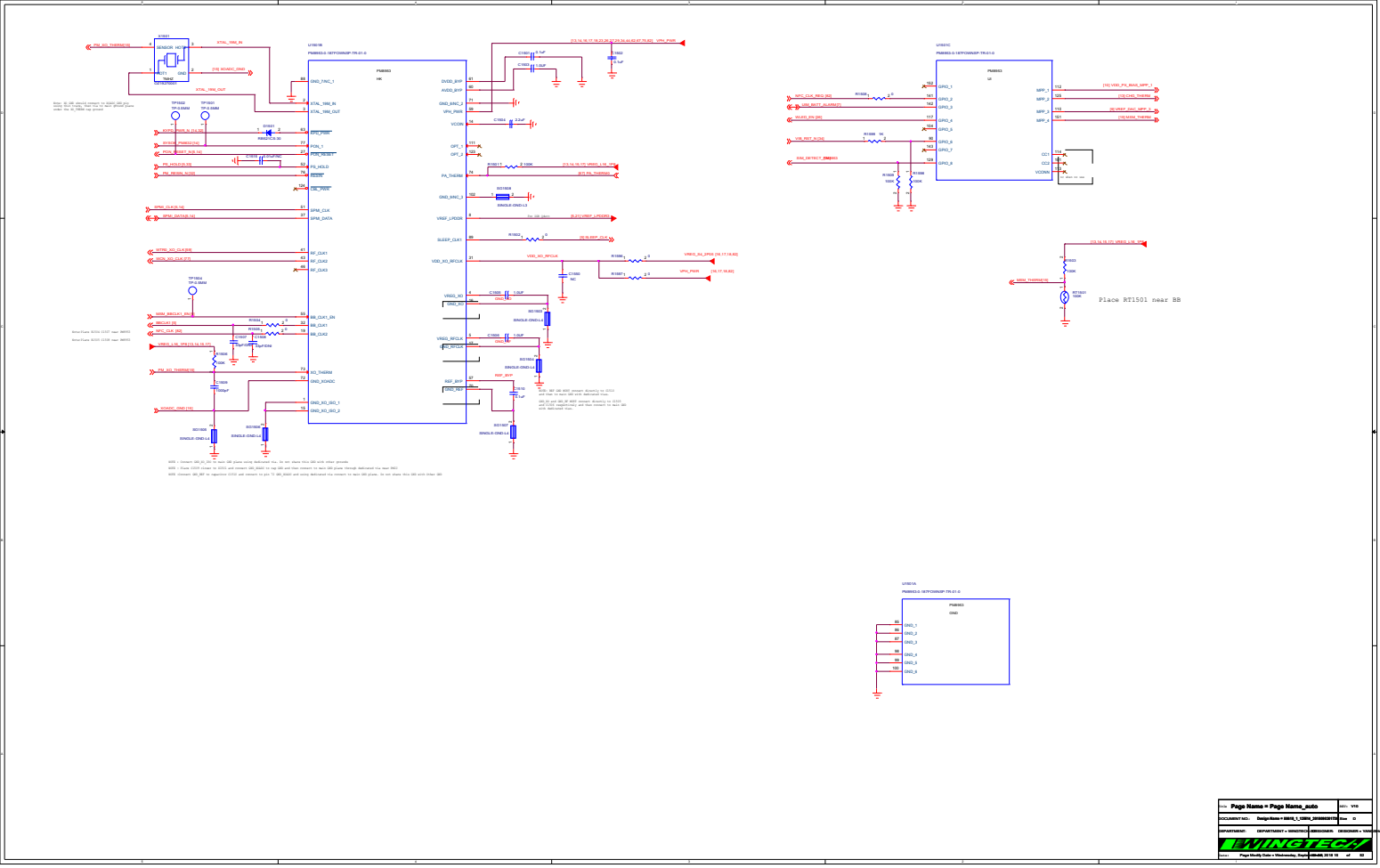

EXCLUSIVO PARA TÉCNICOS

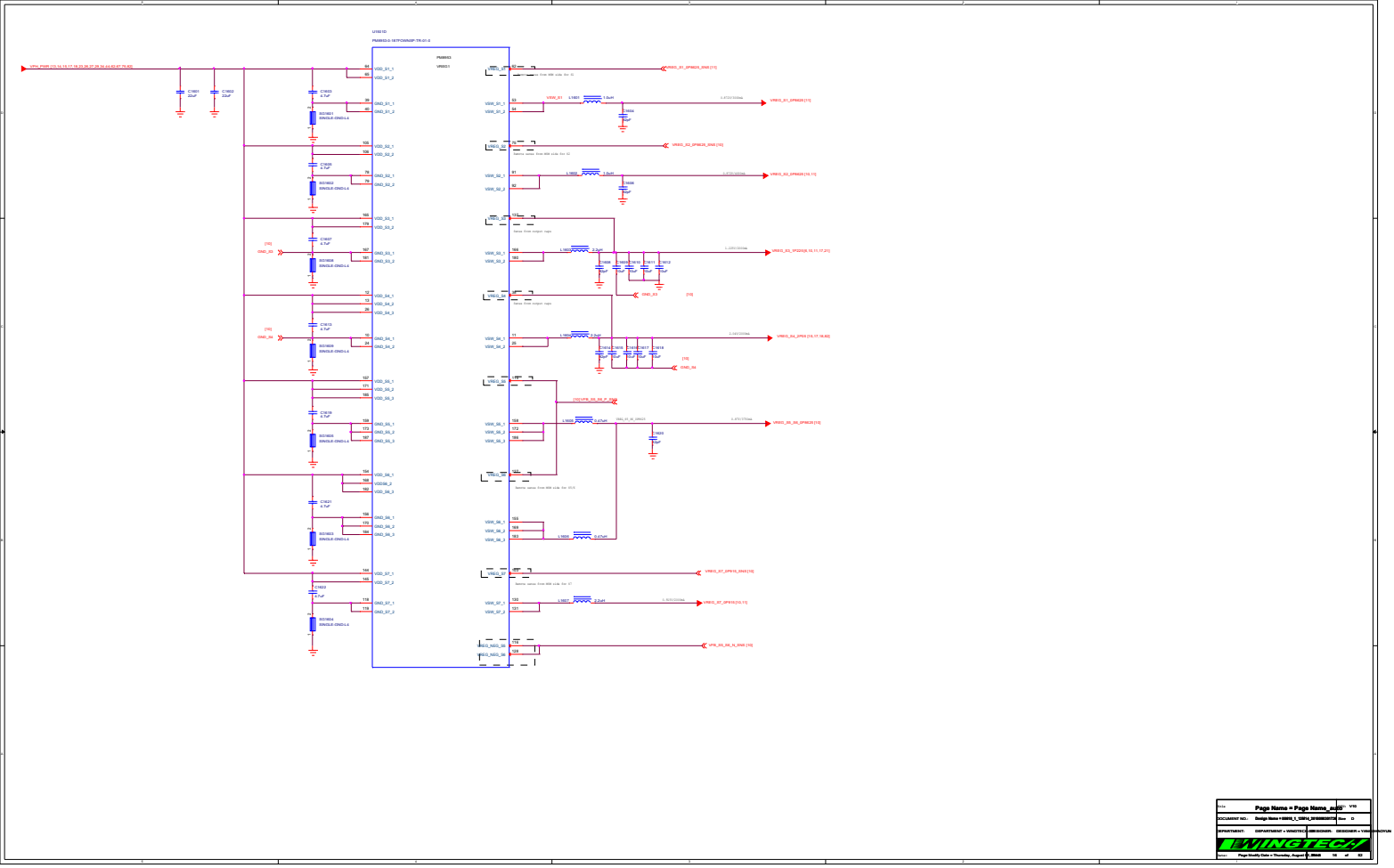
U15D1D
PM8953-G-1B7TFOWNSP-TR-01-0
PM8953
VIN03 1
VDD_S1_1
VDD_S1_2
GND_S1_1
GND_S1_2
GND_S1_3
VDD_S2_1
VDD_S2_2
GND_S2_1
GND_S2_2
VDD_S3_1
VDD_S3_2
GND_S3_1
GND_S3_2
GND_S3_3
VDD_S4_1
VDD_S4_2
VDD_S4_3
GND_S4_1
GND_S4_2
GND_S4_3
VDD_S5_1
VDD_S5_2
VDD_S5_3
GND_S5_1
GND_S5_2
GND_S5_3
VDD_S6_1
VDD_S6_2
VDD_S6_3
GND_S6_1
GND_S6_2
GND_S6_3
VDD_S7_1
VDD_S7_2
GND_S7_1
GND_S7_2
VSW_S1_1
VSW_S1_2
VSW_S2_1
VSW_S2_2
VSW_S3_1
VSW_S3_2
VSW_S4_1
VSW_S4_2
VSW_S5_1
VSW_S5_2
VSW_S5_3
VSW_S6_1
VSW_S6_2
VSW_S6_3
VSW_S7_1
VSW_S7_2
VREG_S1_CAP
VREG_S2_CAP
VREG_S3_CAP
VREG_S4_CAP
VREG_S5_CAP
VREG_S6_CAP
VREG_S7_CAP
VREG_NAS_S6
VREG_NAS_S6
C1601
22uF
C1602
22uF
C1603
0.1uF
C1604
0.1uF
C1605
0.1uF
C1606
0.1uF
C1607
0.1uF
C1608
0.1uF
C1609
0.1uF
C1610
0.1uF
C1611
0.1uF
C1612
0.1uF
C1613
0.1uF
C1614
0.1uF
C1615
0.1uF
C1616
0.1uF
C1617
0.1uF
C1618
0.1uF
C1619
0.1uF
C1620
0.1uF
C1621
0.1uF
C1622
0.1uF

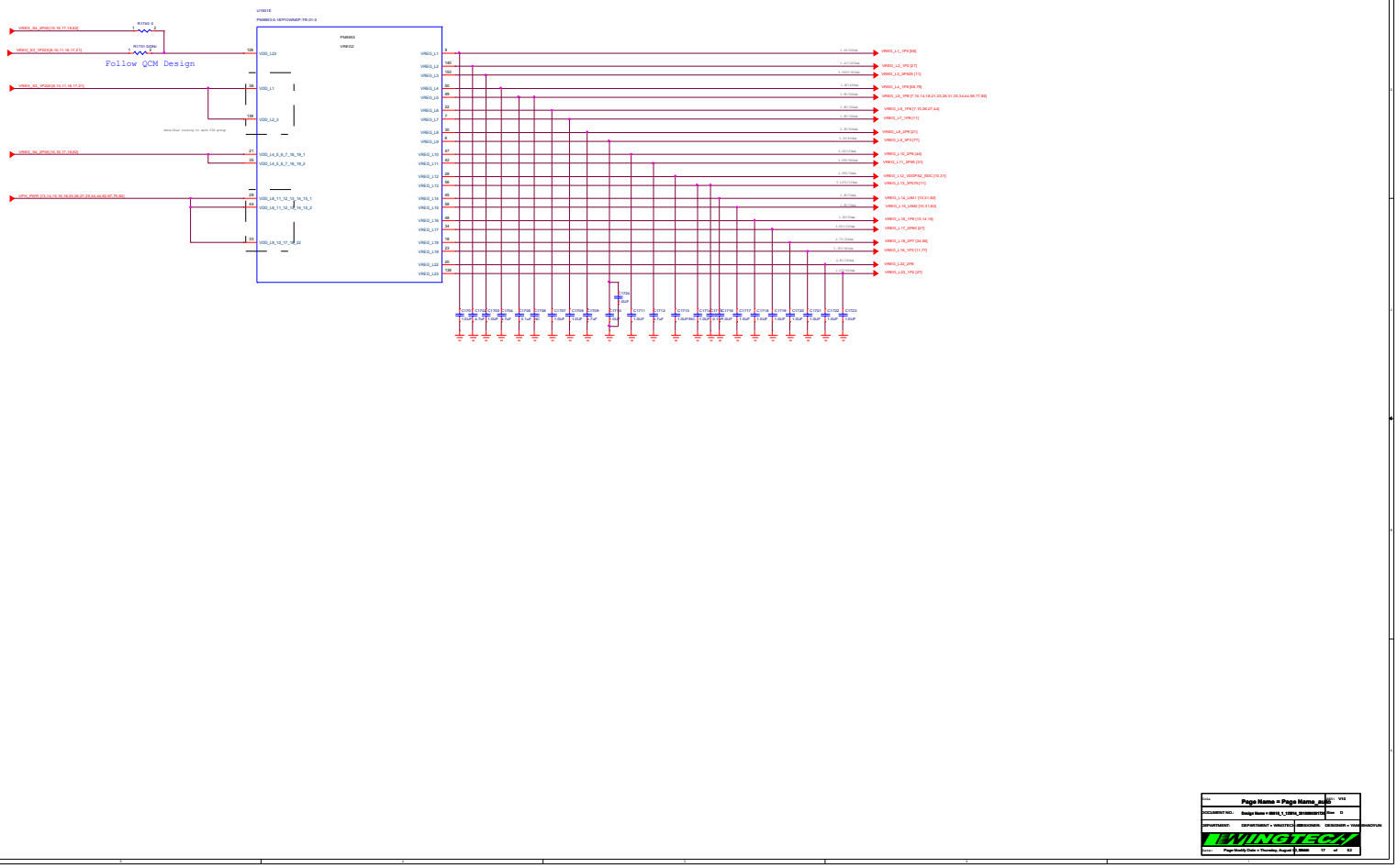

EXCLUSIVO PARA TÉCNICOS

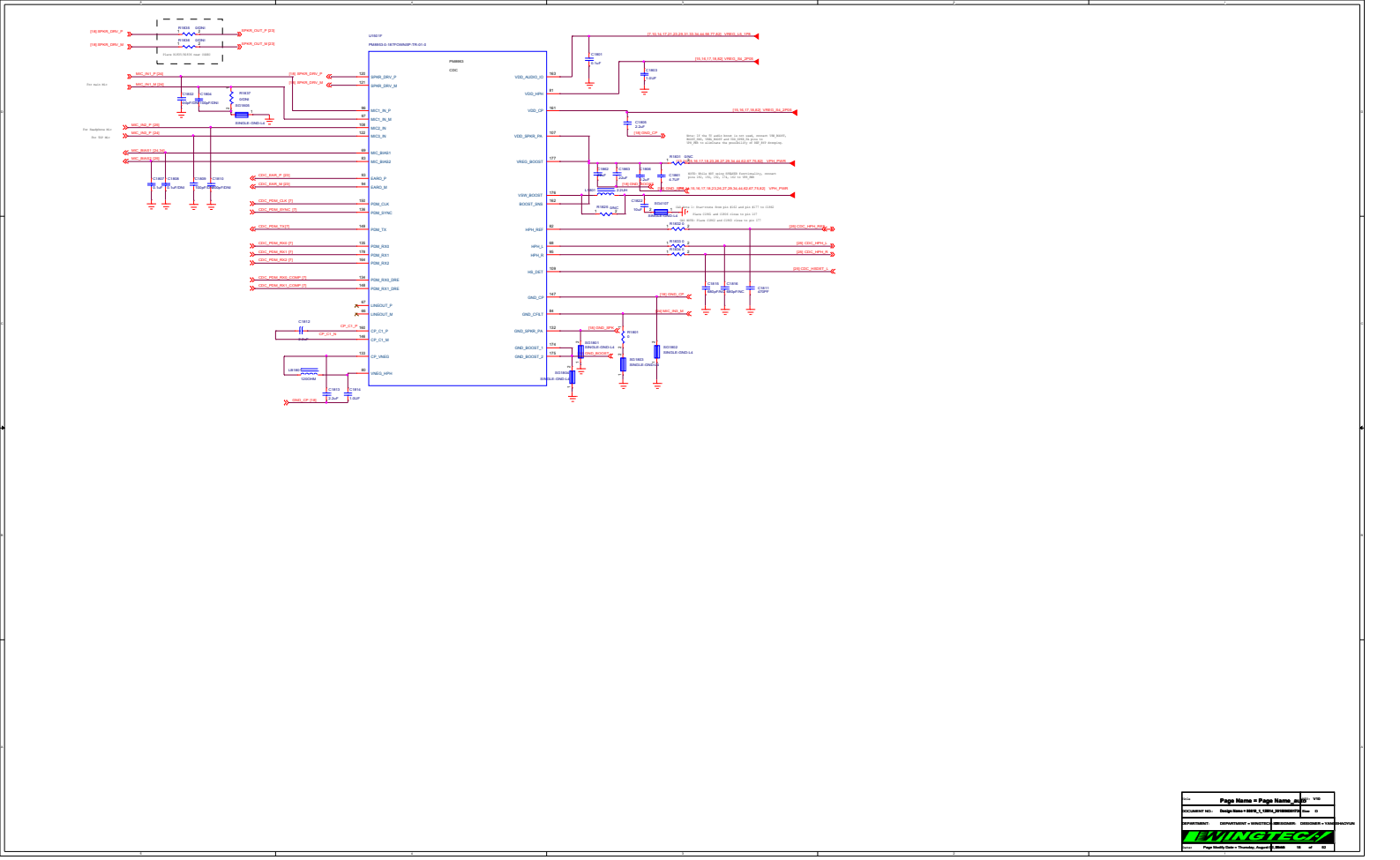

SOFT
EXCLUSIVO PARA TÉCNICOS

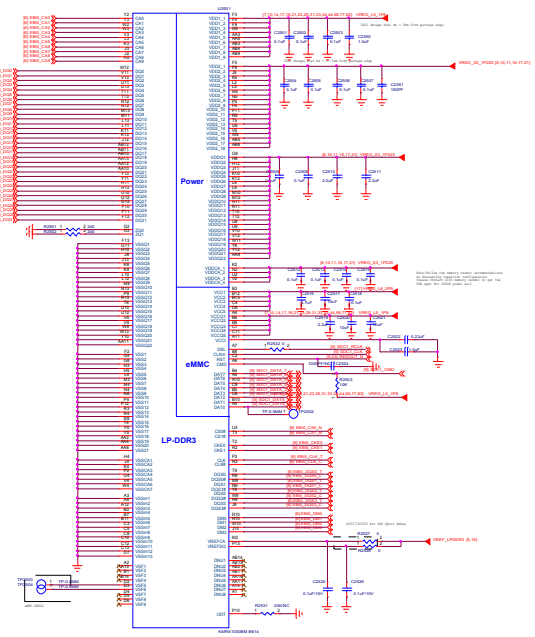

TITLE:	Page Name = Page Name_sub5	SIZE:	V10
DOCUMENT NO.:	Design Name = 8M10_1_1SR04_20150802B1D5	Rev:	D
DEPARTMENT:	DEPARTMENT = WINGTECH	DESIGNER:	DESIGNER = YANNINGKUN
WINGTECH			
SCALE:	Page Modify Date = Thursday, August 03, 2006	21 of	83

LanSOFT
EXCLUSIVO PARA TÉCNICOS

Battery Connector

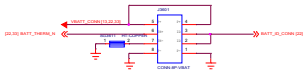

USB_IF

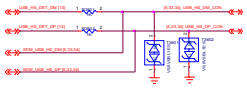

Title	Page Name = Page Name_auto	Size	V10
DOCUMENT NO.:	Design Name = 8B0B_1_13004_20180000170	Size	D
DEPARTMENT:	DEPARTMENT = WINGTECH	DESIGNER:	DESIGNER = YANGHAOYUN
WINGTECH			
Sheet	Page Modify Date = Thursday, August 9, 2018	22	of 62

LanSOFT
EXCLUSIVO PARA TÉCNICOS

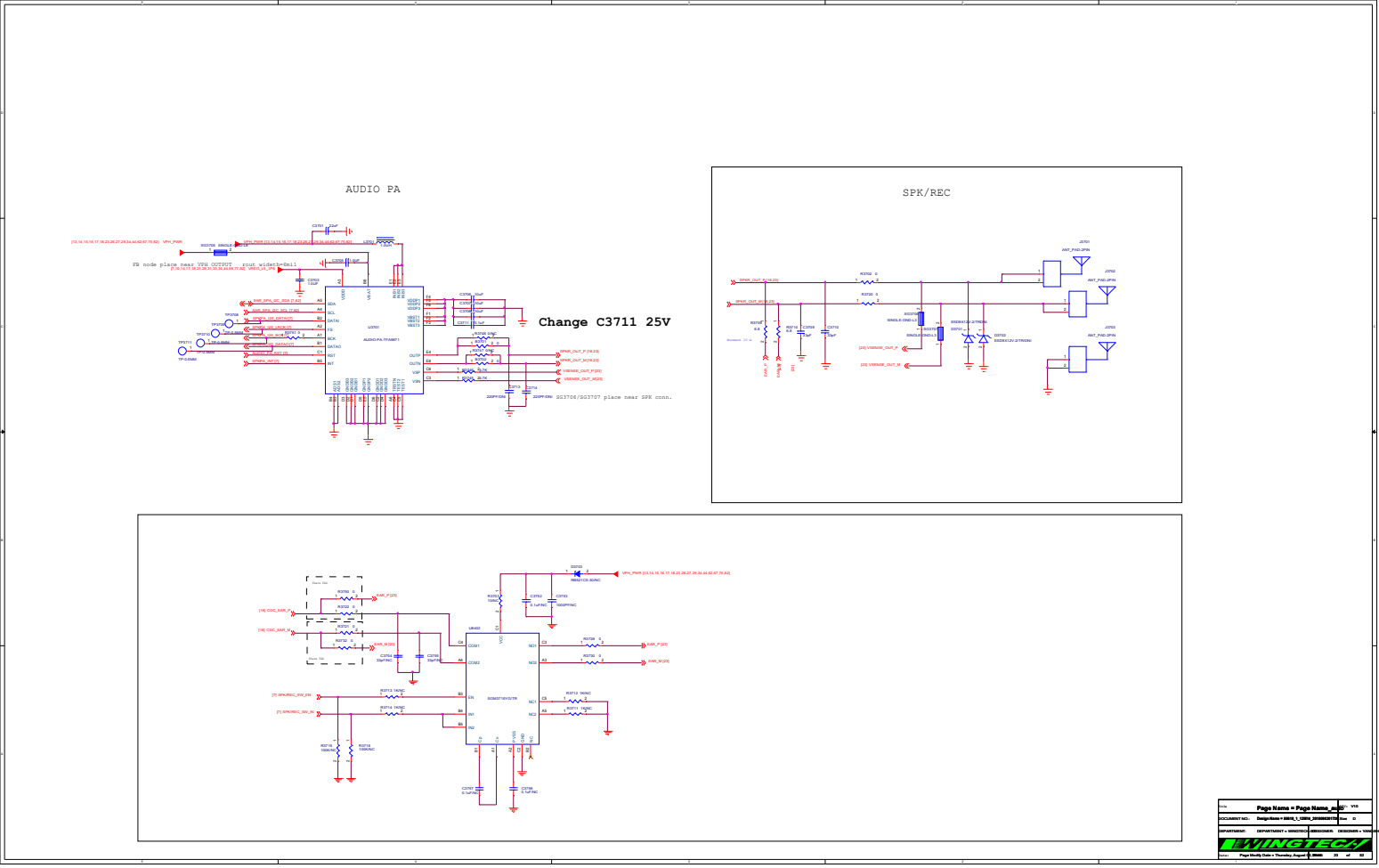

LanSOFT
EXCLUSIVO PARA TÉCNICOS

Mic2

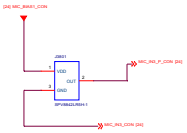

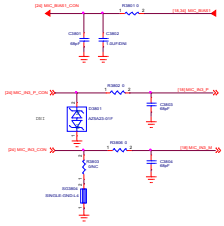

Mic1

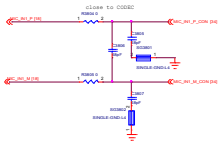

lanSOFT
EXCLUSIVO PARA TÉCNICOS

EARPHONE

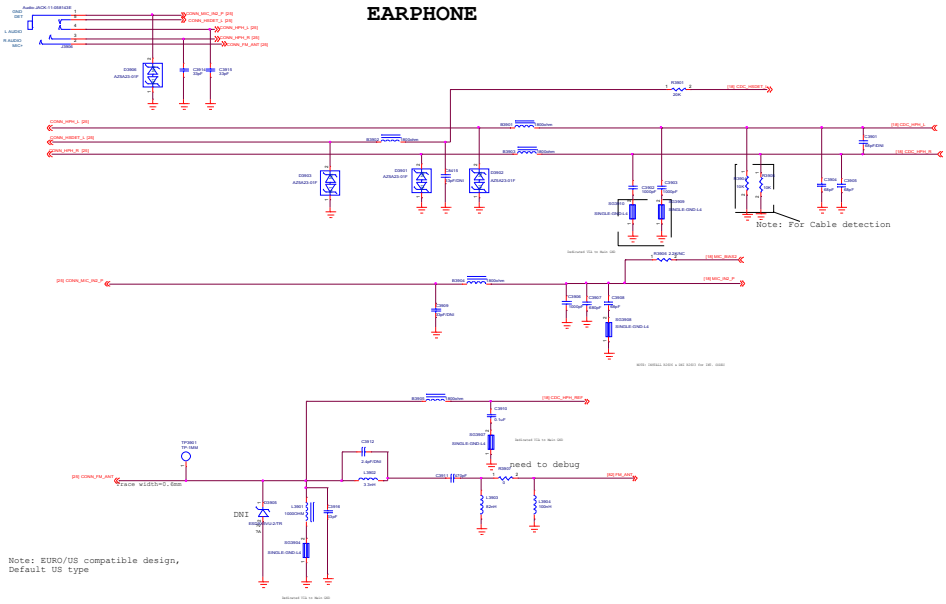

Title	Page Name = Page Name_ANT		V10
DOCUMENT NO.:	Design Name = 8801_1_1000_20080801[illegible]	Size	D
DEPARTMENT:	DEPARTMENT = SENSITECH	DESIGNER:	DESIGNER = VANCHANDYLIN
WINGTECH			
Date:	Page Modify Date = Friday, August 01,	Sheet	26 of 52

LanSOFT
EXCLUSIVO PARA TÉCNICOS

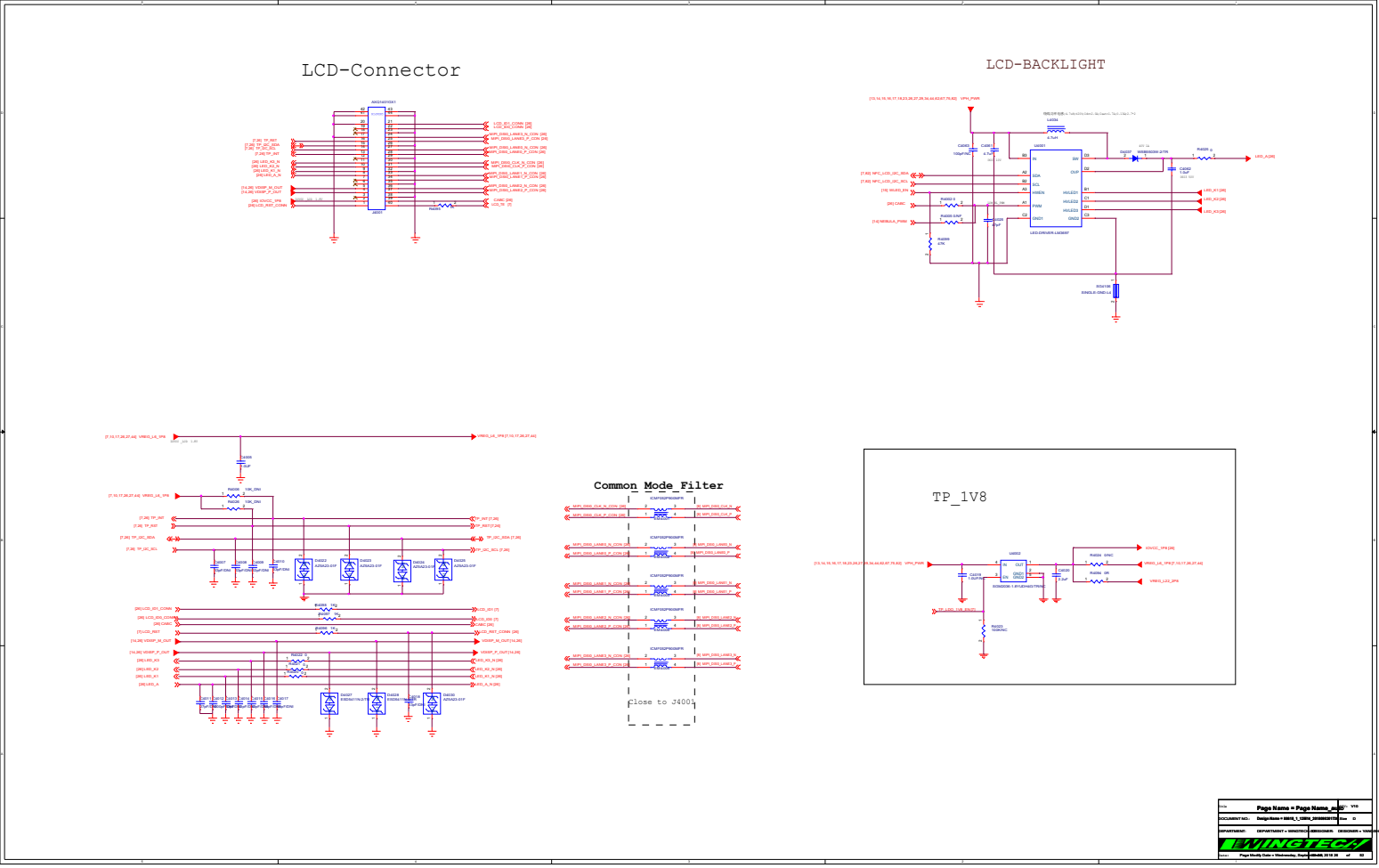

LanSOFT
EXCLUSIVO PARA TÉCNICOS

Main Camera

CAD note: Ensure the DGND to main-GND directly and robustly

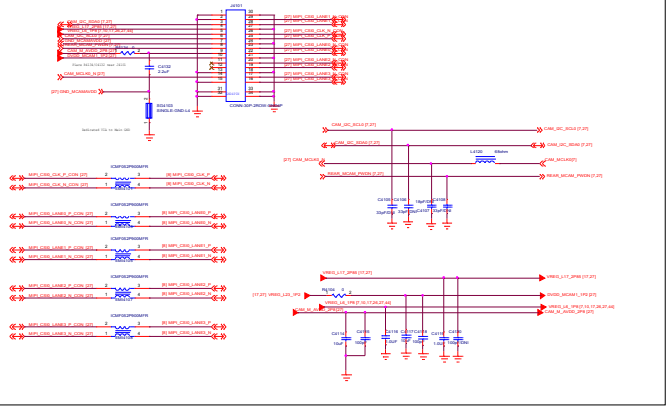

Front Camera

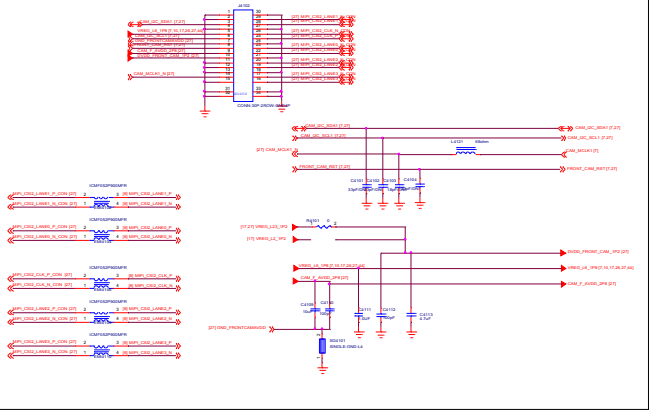

CAM DVDD 1P2

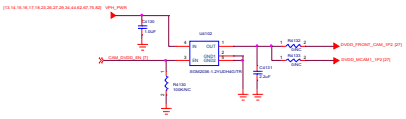

CAM AVDD 2P8

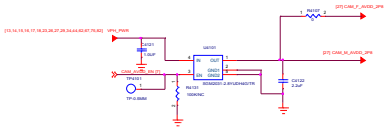

LanSOFT
EXCLUSIVO PARA TÉCNICOS

Flash

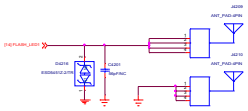

Title:	Page Name = Page Name_ANT		V10
DOCUMENT NO.:	Design Name = 8802_1_1280x_20080828170	Size:	D
DEPARTMENT:	DEPARTMENT = WINGTECH	DESIGNER:	DESIGNER = VANDENKUYLIN
WINGTECH			
Sheet:	Page Modify Date = Thursday, August 21, 2008	28	of 62

LanSOFT
EXCLUSIVO PARA TÉCNICOS

Fingerprint CONNECT

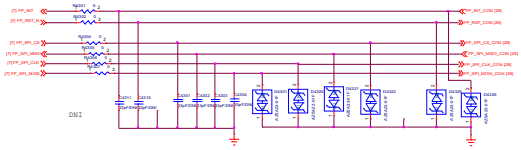

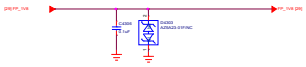

FP_1V8

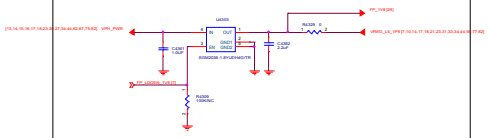

lanSOFT
EXCLUSIVO PARA TÉCNICOS

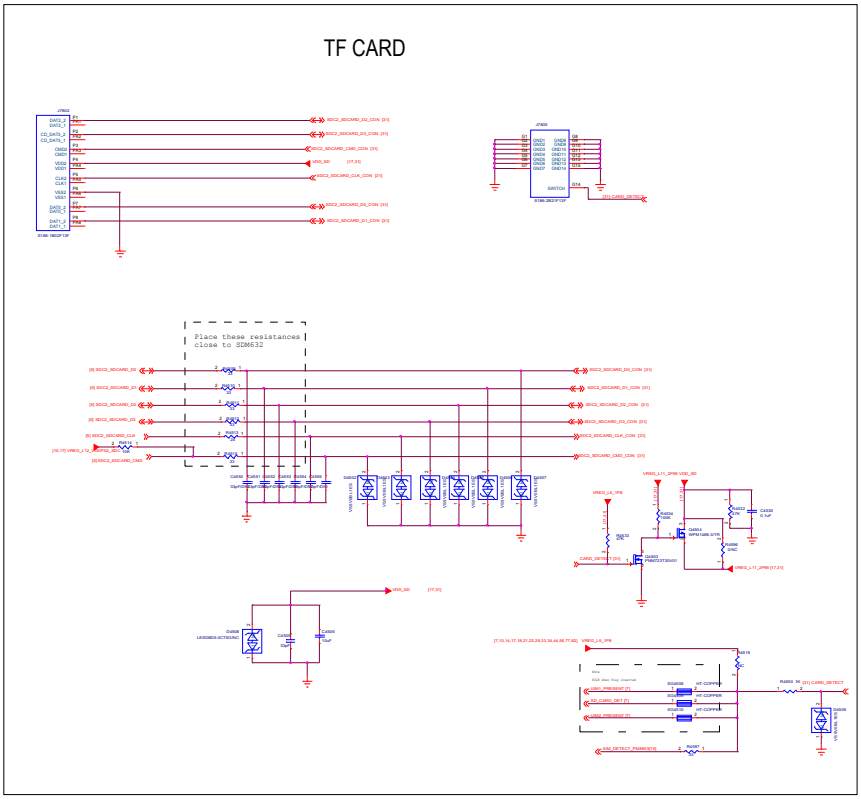

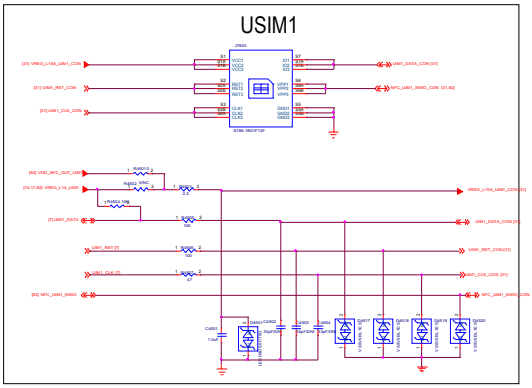

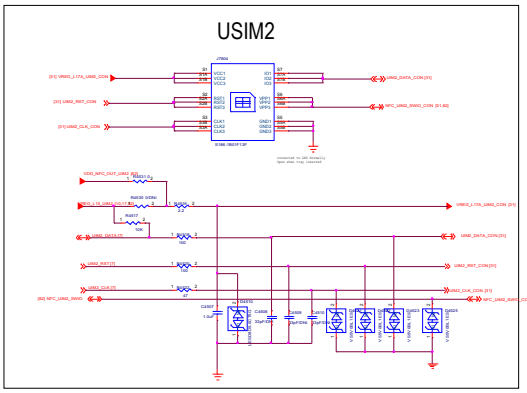

lanSOFT
EXCLUSIVO PARA TÉCNICOS

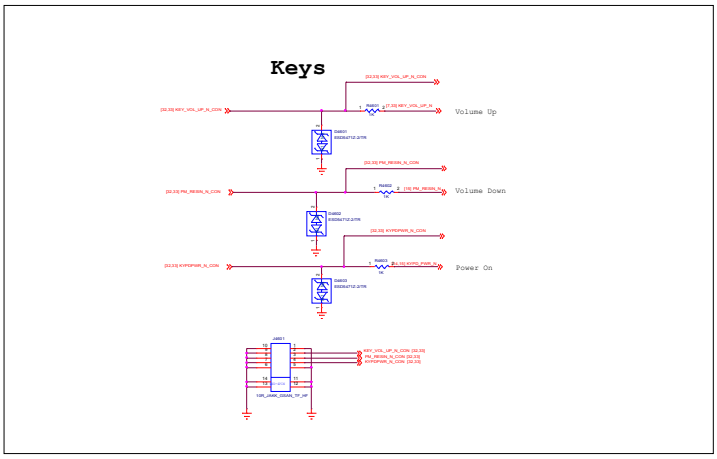

LanSOFT
EXCLUSIVO PARA TÉCNICOS

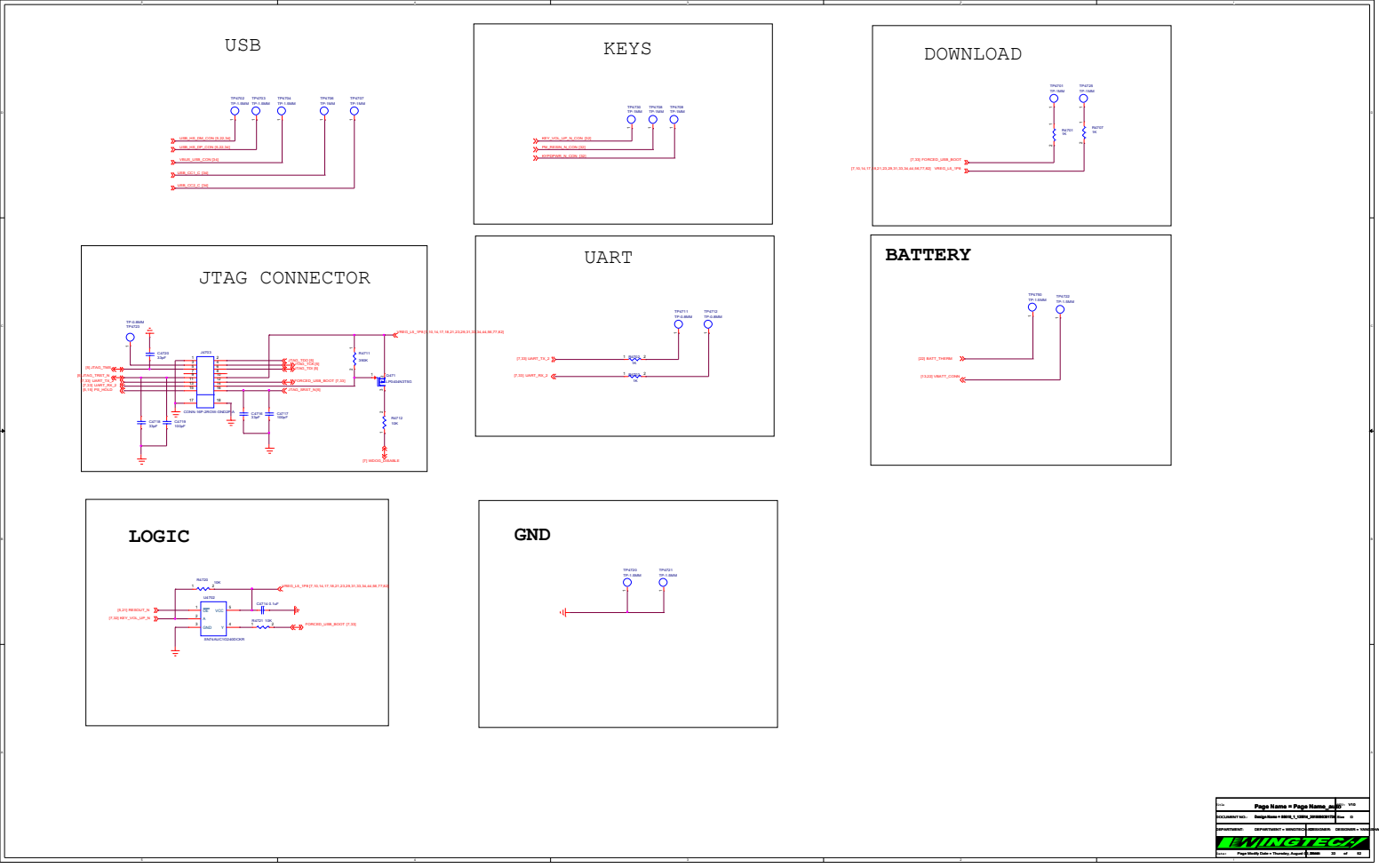

LanSOFT
EXCLUSIVO PARA TÉCNICOS

Sub Board Connector

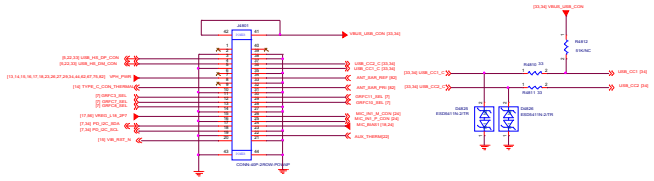

OVP

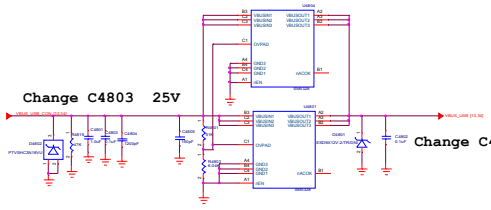

防 烧 MOS

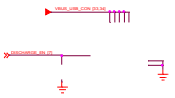

NOT TO BE USED, COPIED, REPRODUCED IN WHOLE OR IN PART, NOR DISCLOSED IN ANY MANNER BY ANYONE WITHOUT THE EXPRESS WRITTEN PERMISSION OF QUALCOMM Technologies, Inc.

THIS TECHNICAL DATA MAY BE SUBJECT TO U.S. AND INTERNATIONAL EXPORT, RE-EXPORT OR TRANSFER (DIVERSION) LAWS. DIVERSION CONTRARY TO U.S. AND INTERNATIONAL LAW IS STRICTLY PROHIBITED

Copyright (C) 2017 QUALCOMM Technologies, Inc.
All rights reserved

CONFIDENTIAL AND PROPRIETARY-QUALCOMM TECHNOLOGIES, INC.

QUALCOMM IS A REGISTERED TRADEMARK OF QUALCOMM INCORPORATED, REGISTERED IN THE UNITED STATES AND OTHER COUNTRIES. OTHER PRODUCT AND BRAND NAMES MAY BE TRADEMARKS OR REGISTERED TRADEMARKS OF THEIR RESPECTIVE OWNERS.

QUALCOMM Technologies,Inc.
5775 Morehouse Drive
San Diego, CA 92121-1714
U.S.A.

Title SCHEMATIC, CCA, QRD SDM630_2-0-2,DVT1.1

LD20-P8825-20

LanSOFT
EXCLUSIVO PARA TÉCNICOS

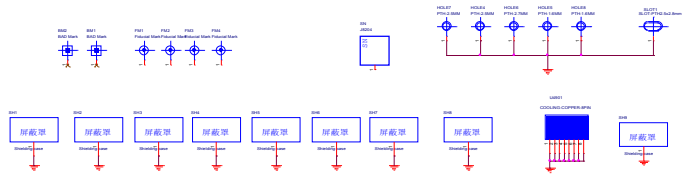

Title:	Page Name = Page Name_sub		V10
DOCUMENT NO.:	Design Name = 00010_1_12014_20100000172	Size:	D
DEPARTMENT:	DEPARTMENT = WINGTECH	DESIGNER:	DESIGNER = VANDERSON
Date:	Page Modify Date = Wednesday, September 08, 2010	of	02

WINGTECH

LianSOFT
EXCLUSIVO PARA TÉCNICOS

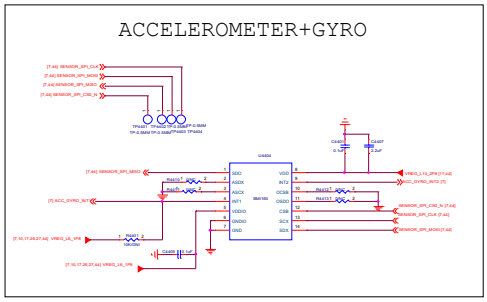

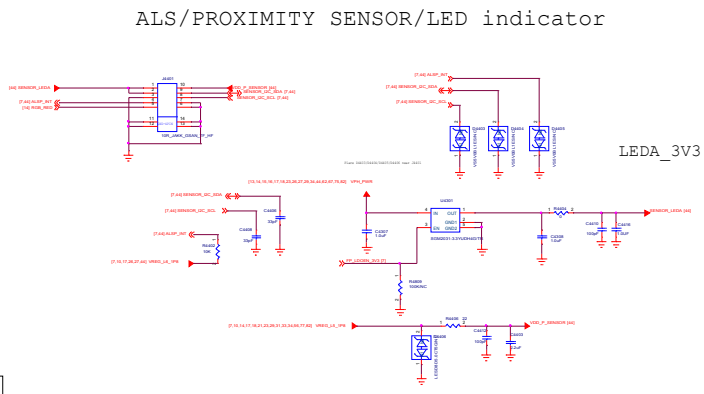

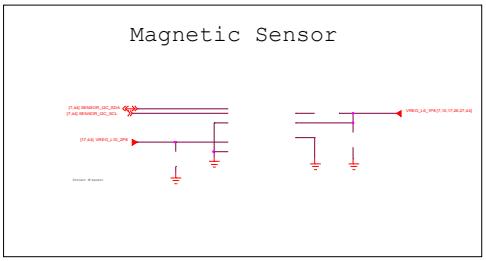

Title	Page Name = 44.Sensor	REV	V10
DOCUMENT NO.	Design Name = 8S60_1_1000_20080201T0	Size	D
DEPARTMENT	DEPARTMENT = WINGTECH	DESIGNER	DESIGNER = VANCHUNTUN
WINGTECH			
Date	Page Modify Date = Thursday, August 21, 2008	44	of 48

LanSOFT
EXCLUSIVO PARA TÉCNICOS

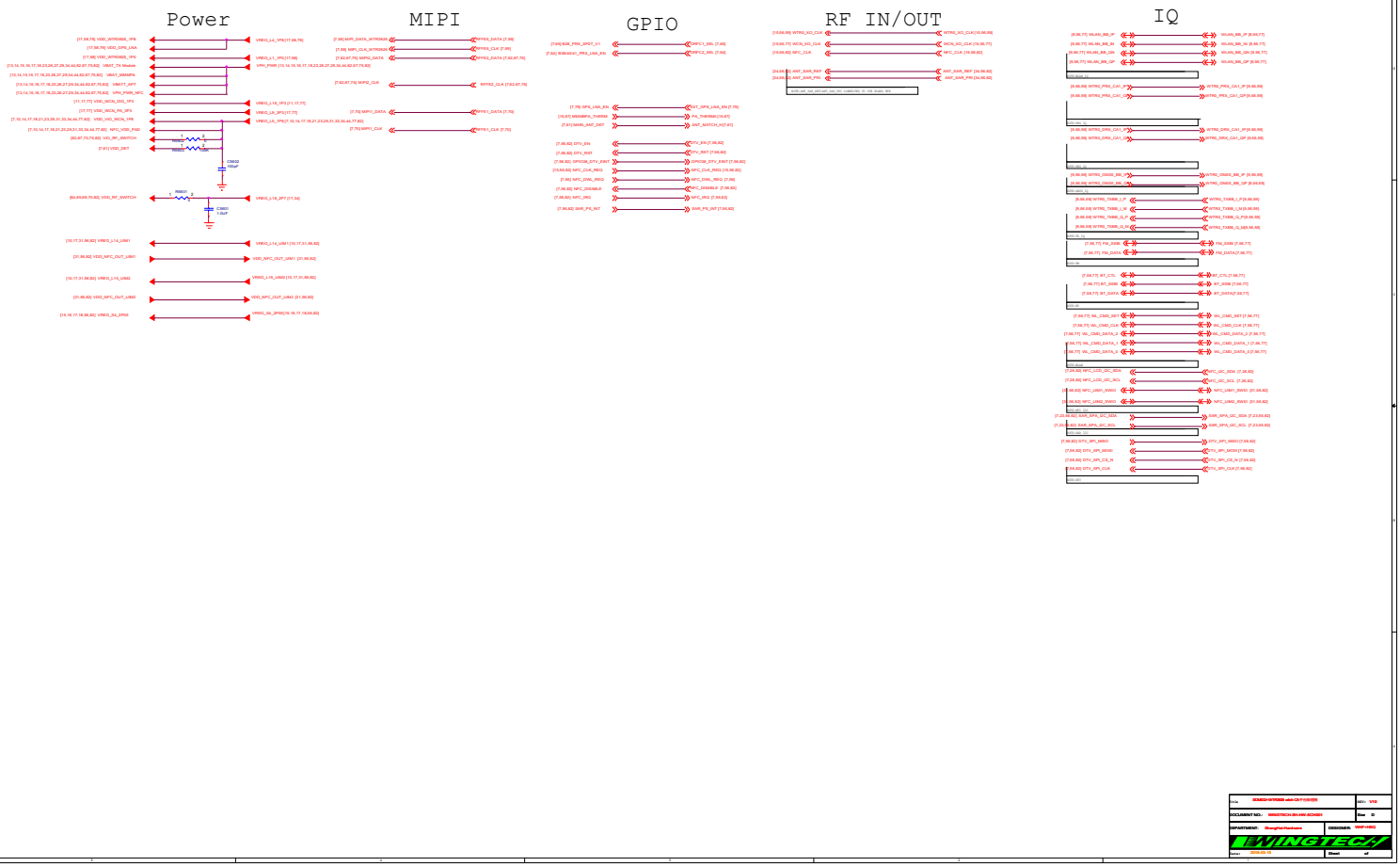

lanSOFT
EXCLUSIVO PARA TÉCNICOS

Notice refer to Jade BF Block Diagram.pdf

Title:	REMOVE WINGTECH with CATCHER		REV: V10
DOCUMENT NO.:	WINGTECH-2014-HW-SCH001		Size: D
DEPARTMENT:	Shanghai Hardware	DESIGNER:	WINFHWG
WINGTECH			
Date:	2016-02-18	Sheet	of

LianSOFT
EXCLUSIVO PARA TÉCNICOS

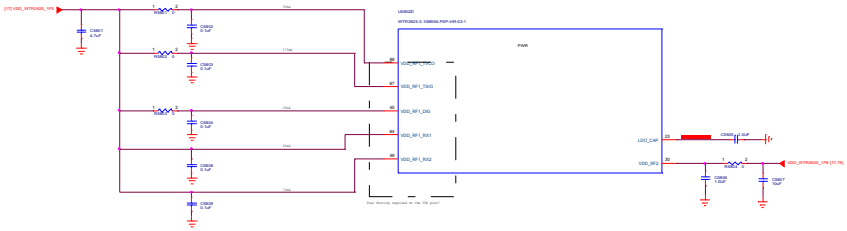

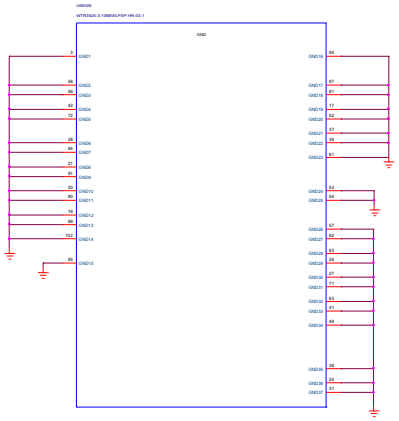

Title:	RDM2D-WTR3926 with CAT-V (GSM)		REV: V10
DOCUMENT NO.:	WINGTECH-SH-HW-SCH001		Size: D
DEPARTMENT:	Shanghai Hardware	DESIGNER:	WHP-HWG
WINGTECH			
Date:	2020-05-19	Sheet	of

LanSOFT
EXCLUSIVO PARA TÉCNICOS

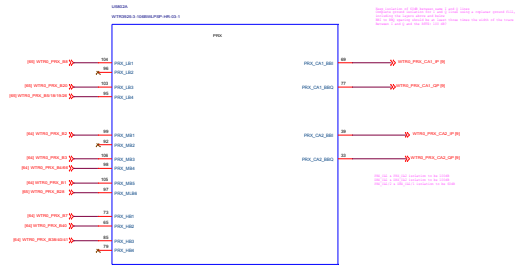

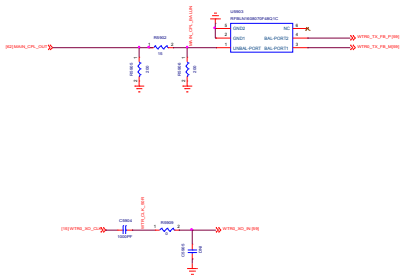

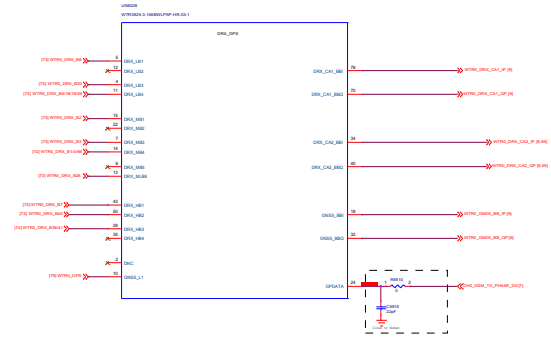

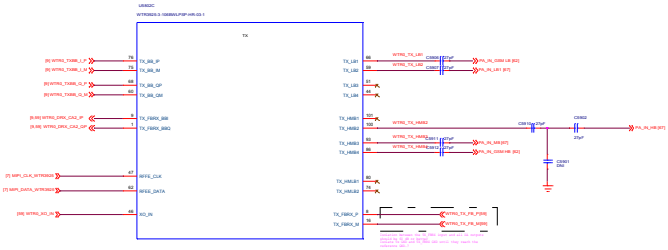

Title	XIAOMI-WTR5285 with ON FV3X5305
REV.	V1B
DOCUMENT NO.	WINGTECH-SI-HW-SCH001
Size	B
DEPARTMENT	Shanghai Hardware
DESIGNER	WANFANG
Date	2020-03-16
Sheet	of

EXCLUSIVO PARA TÉCNICOS

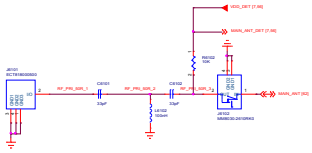

Title:	REMEDIO INTERNO ebin DAY-V-GEN-RR	REV:	V10
DOCUMENT NO.:	WINGTECH-SH-HW-BCH001	Size:	D
DEPARTMENT:	ShanghaiHardware	DESIGNER:	WINFHWG
	WINGTECH		
Date:	2018-05-10	Sheet	of

LanSOFT
EXCLUSIVO PARA TÉCNICOS

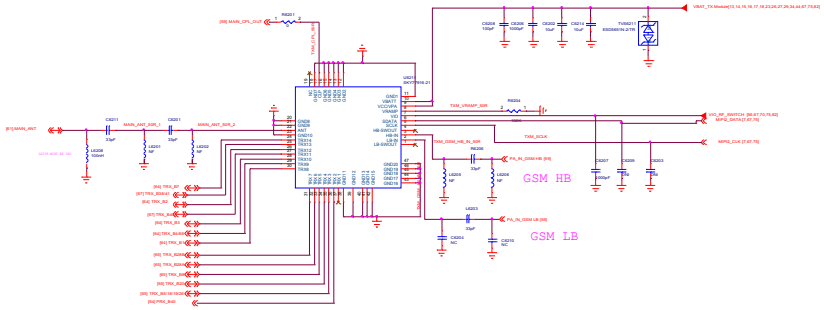

lanSOFT
EXCLUSIVO PARA TÉCNICOS

B1

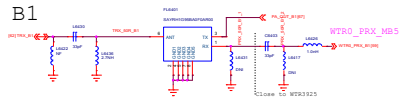

B2

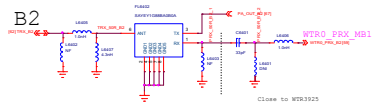

B3

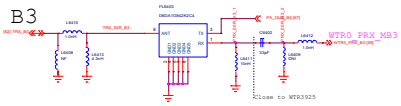

B4/66

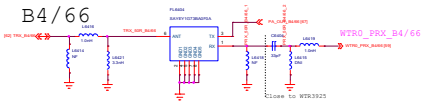

B7

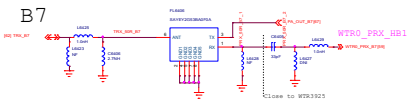

B40

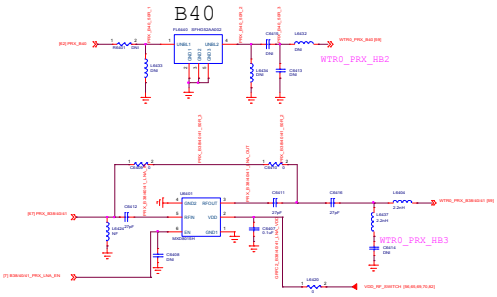

B38/40/41

LANSOFT
EXCLUSIVO PARA TÉCNICOS

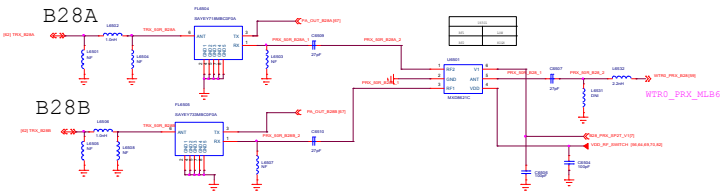

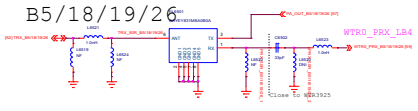

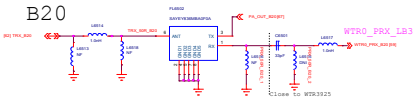

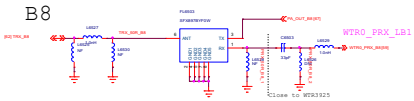

lanSOFT
EXCLUSIVO PARA TÉCNICOS

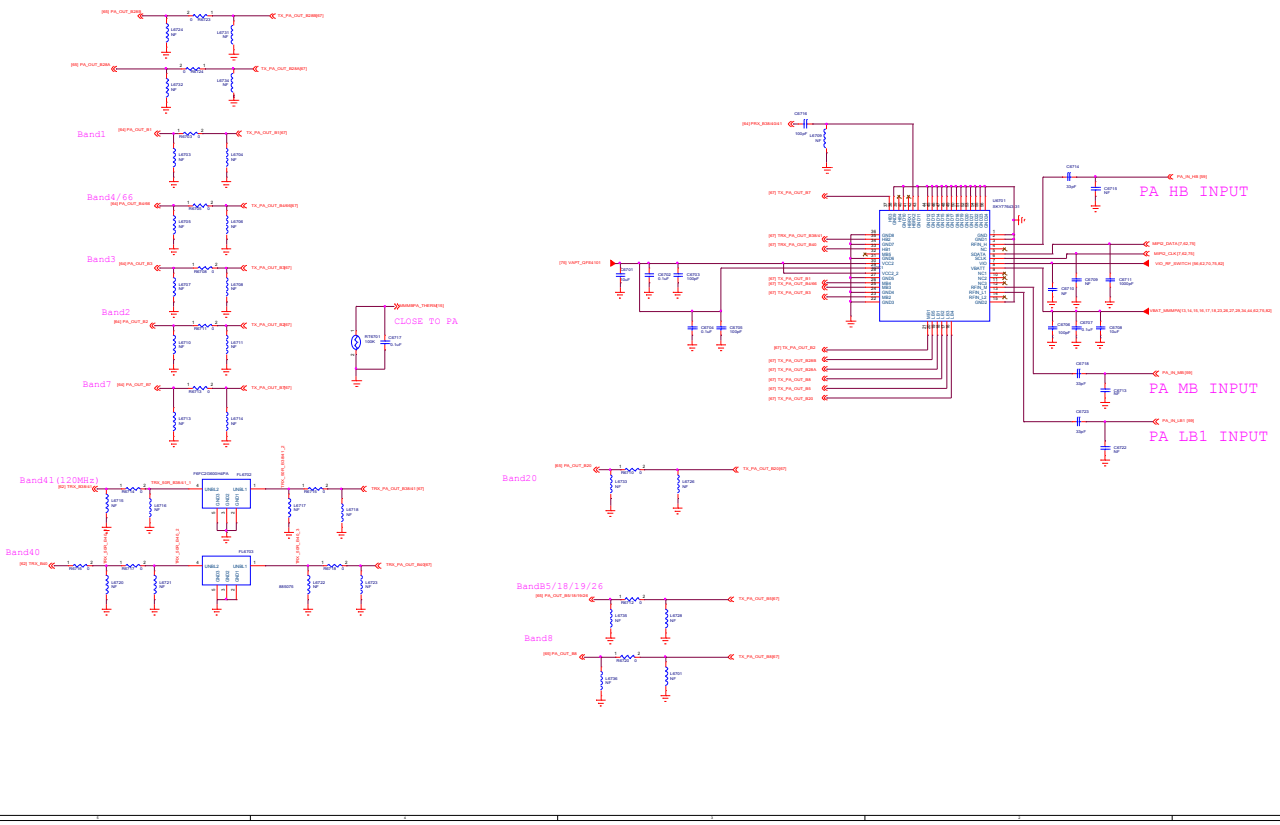

lanSOFT
EXCLUSIVO PARA TÉCNICOS

Title:	REV: V10
DOCUMENT NO.:	Size: B
DEPARTMENT: Shanghai Hardware	DESIGNER:
WINGTECH	
Date:	Sheet of

CanSOFT
EXCLUSIVO PARA TÉCNICOS

RF Port

Power

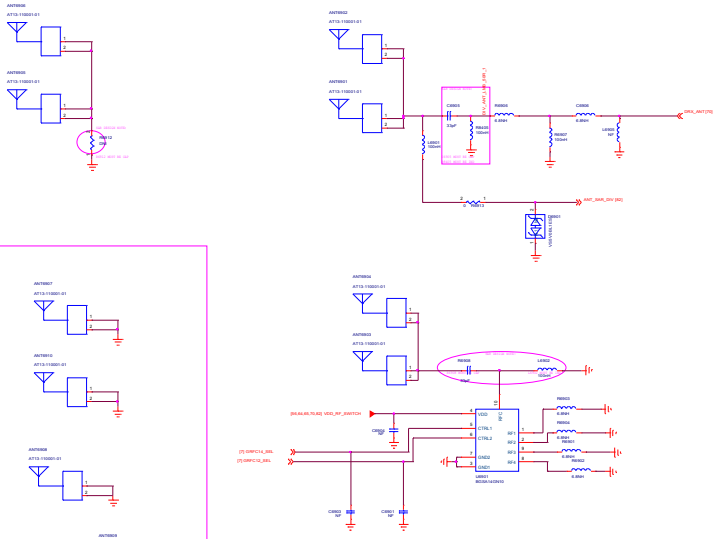

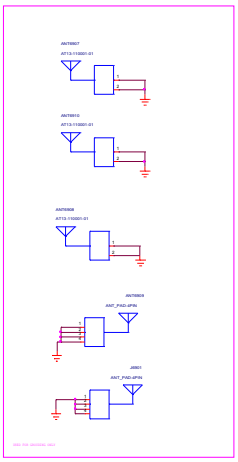

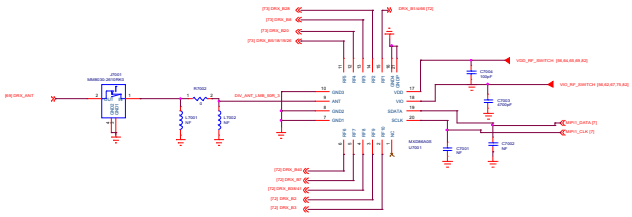

Title:	Page Name = 70.Diversity ASM	Size:	V10
DOCUMENT NO.:	Design Name = 00010_1_10014_20100000120	Rev:	D
DEPARTMENT:		DESIGNER:	
WINGTECH			
Date:	Page Modify Date = Wednesday, September 08, 2010	of	

LanSOFT
EXCLUSIVO PARA TÉCNICOS

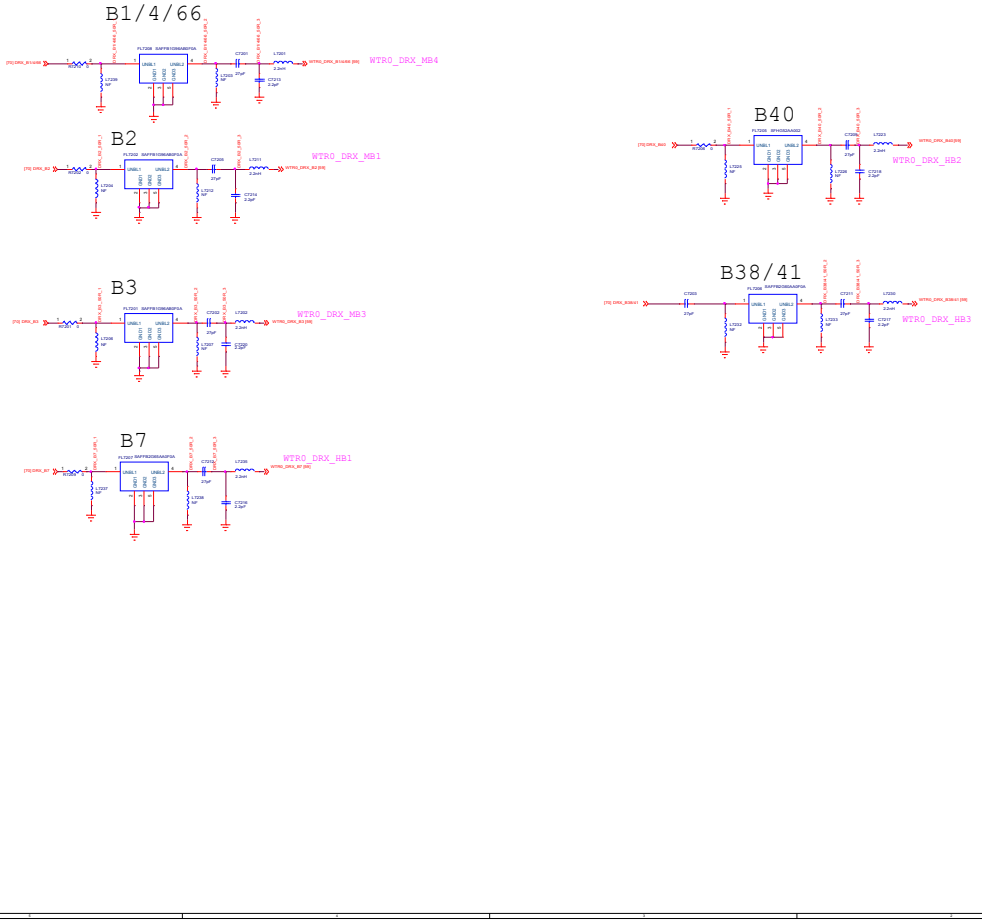

LanSOFT
EXCLUSIVO PARA TÉCNICOS

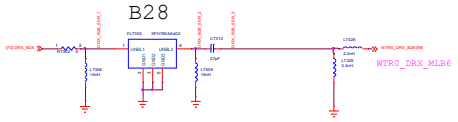

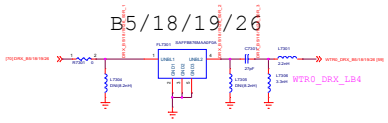

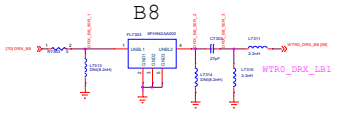

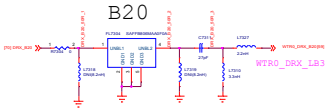

SOFT
EXCLUSIVO PARA TÉCNICOS

RF Port

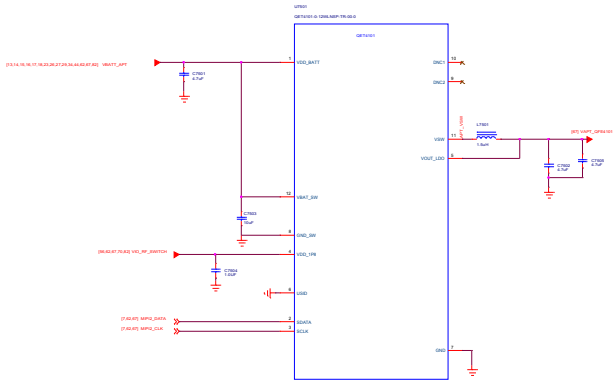

lanSOFT
EXCLUSIVO PARA TÉCNICOS

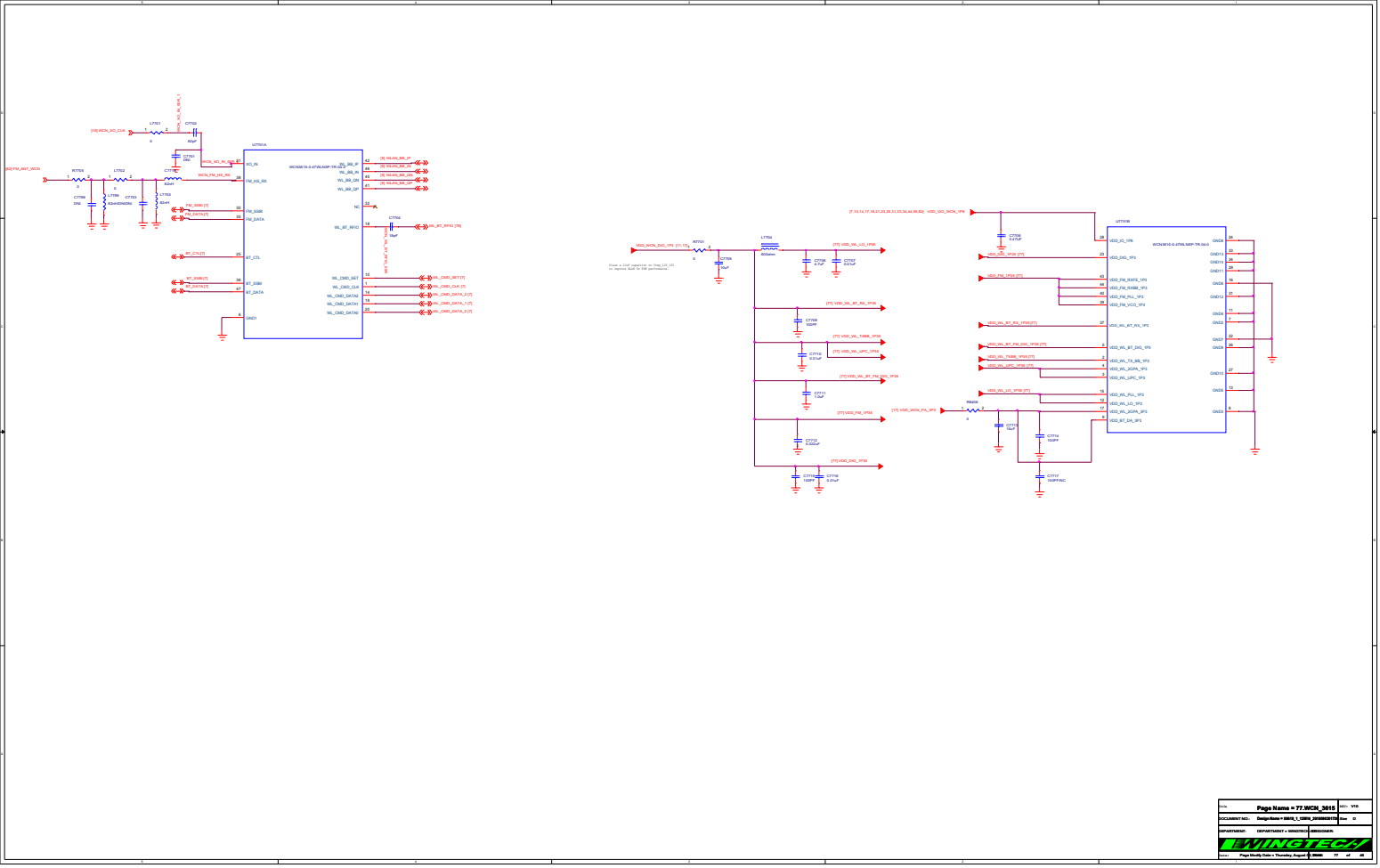

LanSOFT
EXCLUSIVO PARA TÉCNICOS

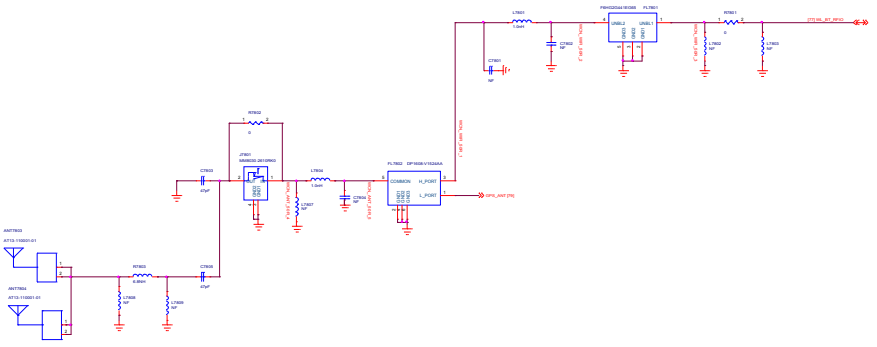
ANT7803
ANT7804
R7802
C7808
C7809
C7803
C7804
R7803
R7804
C7805
C7806
C7807
L7801
L7802
L7803
L7804
L7805
L7806
L7807
C7801
C7802
C7803
C7804
C7805
R7801
R7802
R7803
L7802
L7803
FL7801
FL7802
COMMON
H_PORT
L_PORT
GPS_ANT [76]
2.4G_ANT [76,84]
5.8G_ANT [76,84]
GPS_ANT [76,84]
2.4G_ANT [76,84]
5.8G_ANT [76,84]
2.4G_ANT [76,84]
5.8G_ANT [76,84]
2.4G_ANT [76,84]
5.8G

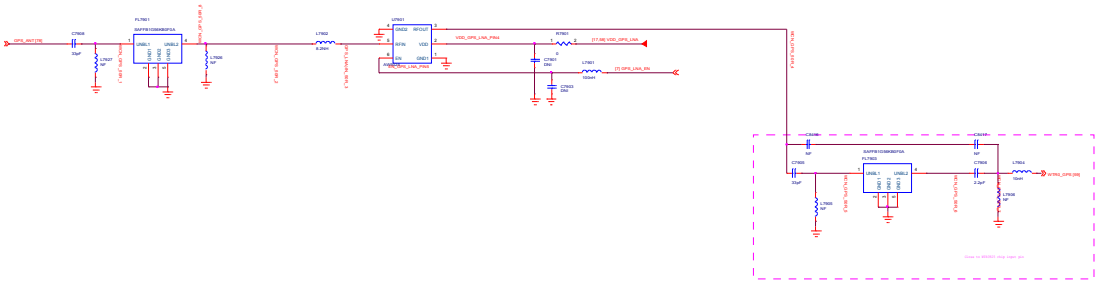

Title:	RDMED-W7000B with CAT-1 (SIEMENS)		REV: V10
DOCUMENT NO.:	WINGTECH-SH-HW-SCH001		Size: D
DEPARTMENT:	ShangHai Hardware	DESIGNER:	WINFHWG
WINGTECH			
Date:	2018-05-18	Sheet	of

LanSOFT
EXCLUSIVO PARA TÉCNICOS

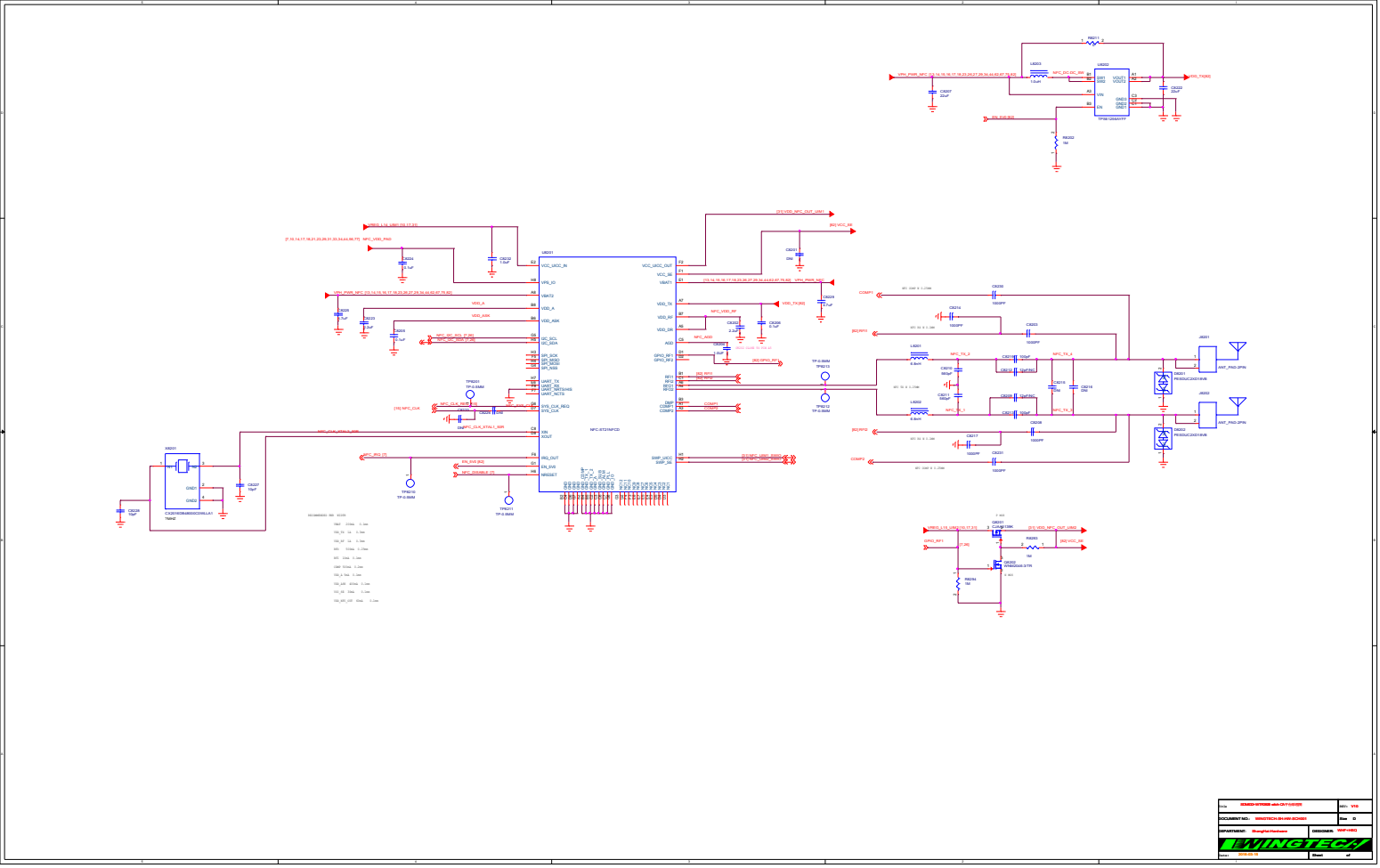

lanSOFT
EXCLUSIVO PARA TÉCNICOS

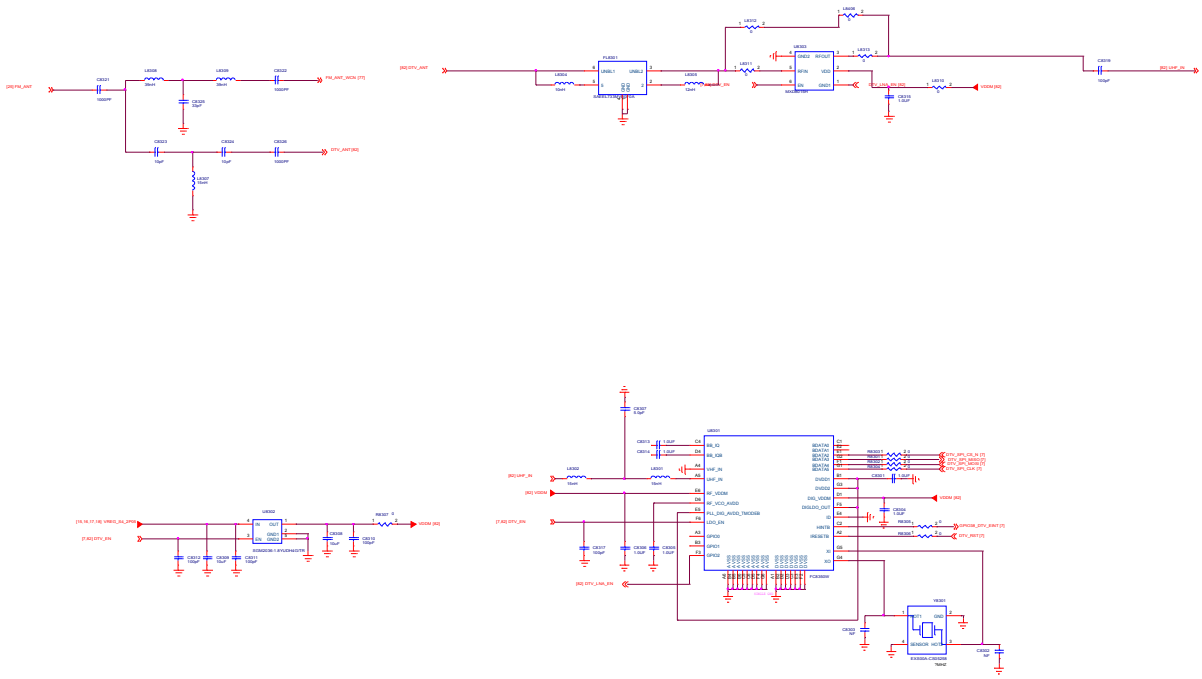

lanSOFT
EXCLUSIVO PARA TÉCNICOS

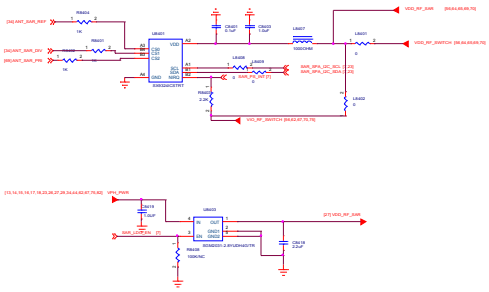

Title:	RCMS3-W7R5000 with CAT-V (GB/EE)		REV: V10
DOCUMENT NO.:	WINGTECH-SH-HW-SCH001		Size: D
DEPARTMENT:	ShangHai Hardware	DESIGNER:	WAP+WEG
WINGTECH			
Date:	2019-05-18	Sheet	of

LianSOFT
EXCLUSIVO PARA TÉCNICOS