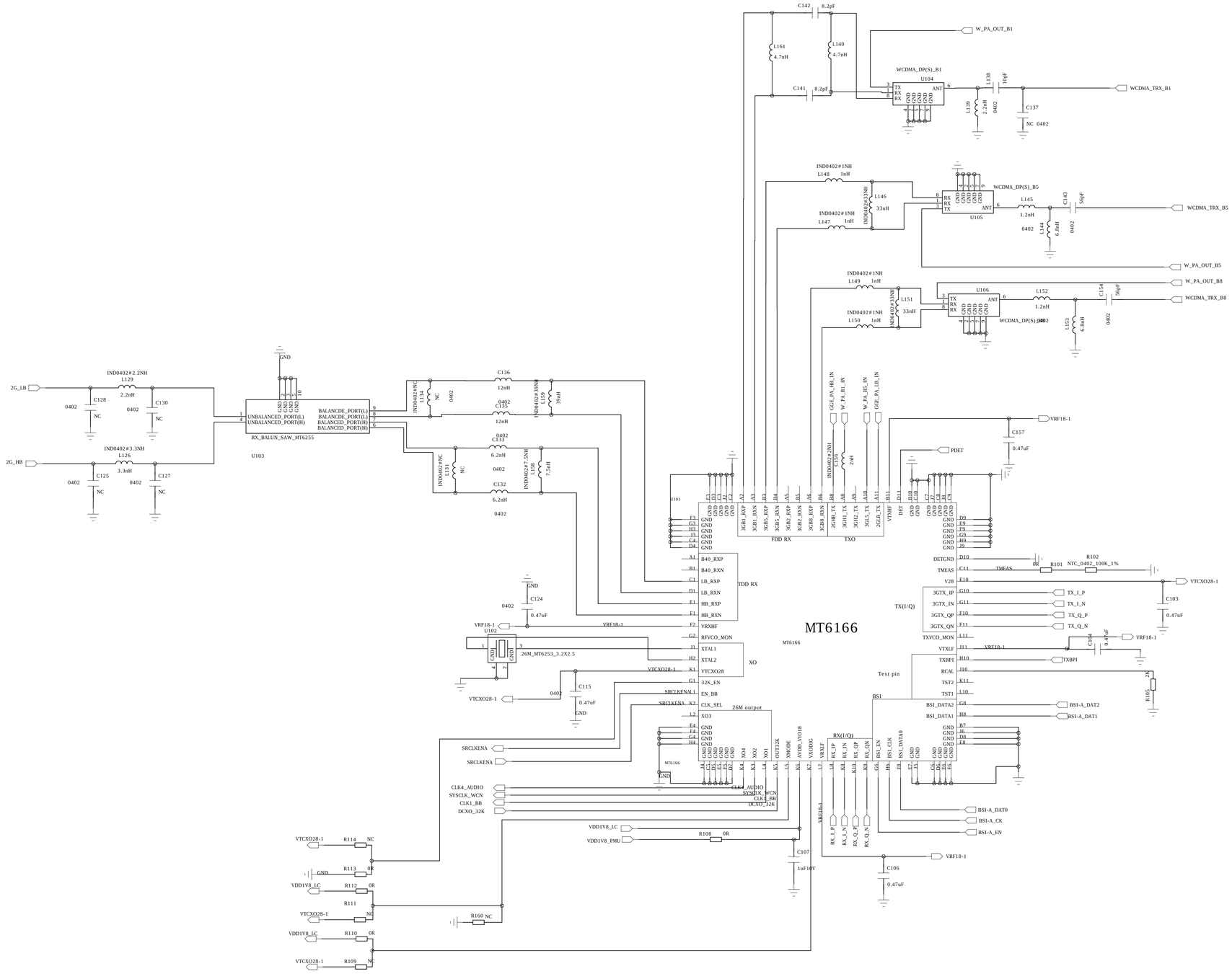
MT6166
U101
U102
U103
U104
U105
U106
RX_BALUN_SAW_MT6255
26M_MT6253_3.2X2.5
WCDMA_DP(S)_B1
WCDMA_DP(S)_B5
WCDMA_DP(S)_B8
W_PA_OUT_B1
WCDMA_TRX_B1
W_PA_OUT_B5
WCDMA_TRX_B5
W_PA_OUT_B8
WCDMA_TRX_B8
2G_LB
2G_HB
VRF18-1
PDET
VTCXO28-1
TX_I_P
TX_I_N
TX_Q_P
TX_Q_N
TXBPI
BSI-A_DAT2
BSI-A_DAT1
BSI-A_DAT0
BSI-A_CK
BSI-A_EN
SRCLKENA
CLK4_AUDIO
SYSCLK_WCN
CLK1_BB
DCXO_32K
VDD1V8_LC
VDD1V8_PMU
FDD RX
TXO
TDD RX
XO
26M output
RX(I/Q)
TX(I/Q)
Test pin

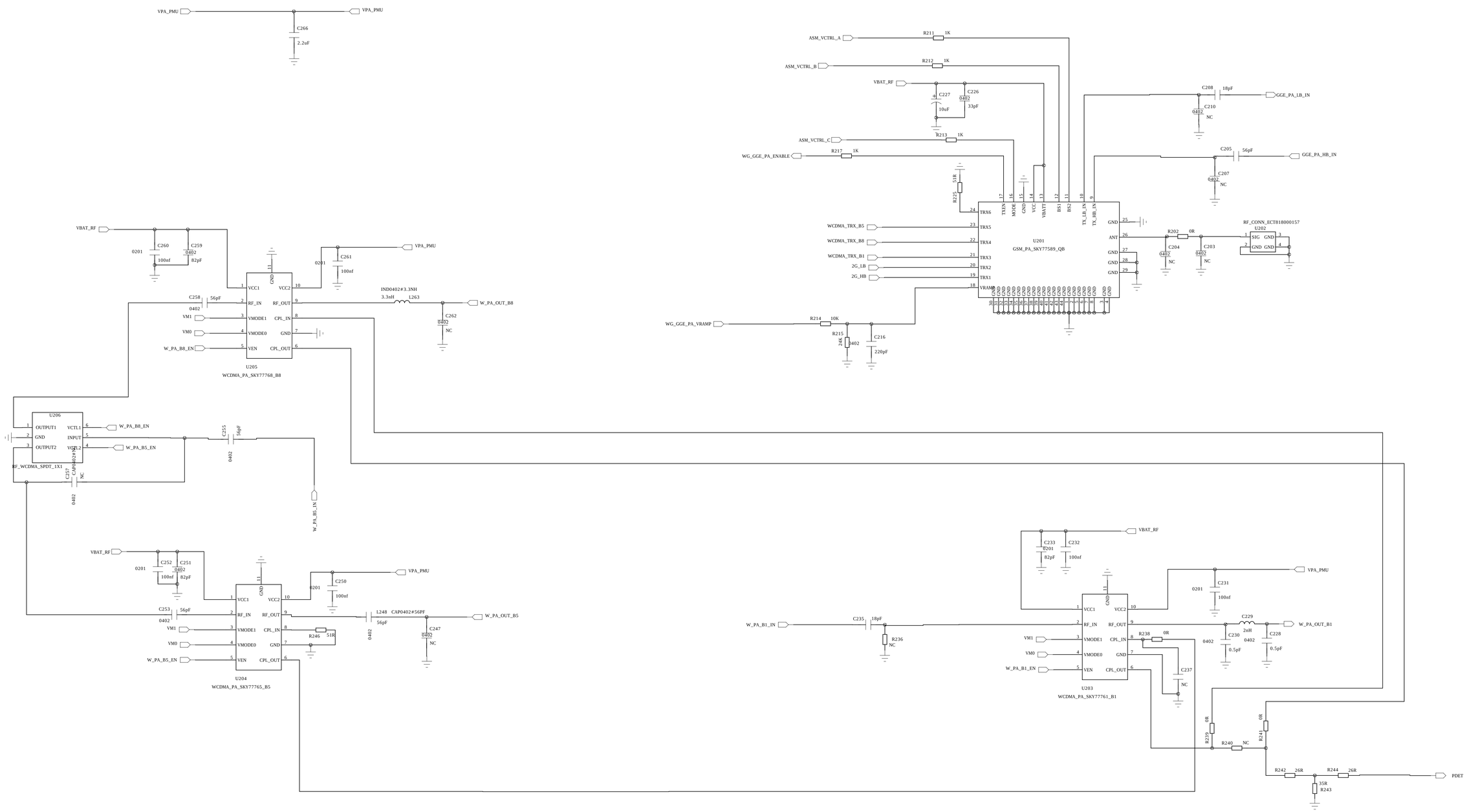
VPA_PMU
C266
2.2uF
ASM_VCTRL_A
R211 1K
ASM_VCTRL_B
R212 1K
VBAT_RF
C227 10uF
C226 0402 33pF
ASM_VCTRL_C
R213 1K
WG_GGE_PA_ENABLE
R217 1K
R225 51R
C208 18pF
C210 0402 NC
GGE_PA_LB_IN
C205 56pF
C207 0402 NC
GGE_PA_HB_IN
WCDMA_TRX_B5
WCDMA_TRX_B8
WCDMA_TRX_B1
2G_LB
2G_HB
TRX6
TRX5
TRX4
TRX3
TRX2
TRX1
VRAMP
TXEN
MODE
GND
VCC
VBATT
BS1
BS2
TX_LB_IN
TX_HB_IN
U201
GSM_PA_SKY77589_QB
ANT
R202 0R
C204 0402 NC
C203 0402 NC
RF_CONN_ECT818000157
U202
SIG GND
GND GND
WG_GGE_PA_VRAMP
R214 10K
R215 24R 0402
C216 220pF
VBAT_RF
C260 0201 100nf
C259 0402 82pF
C261 0201 100nf
VPA_PMU
C258 0402 56pF
IND0402#3.3NH
3.3nH L263
W_PA_OUT_B8
C262 0402 NC
VCC1
RF_IN
VMODE1
VMODE0
VEN
VCC2
RF_OUT
CPL_IN
GND
CPL_OUT
VM1
VM0
W_PA_B8_EN
U205
WCDMA_PA_SKY77768_B8
U206
OUTPUT1
GND
OUTPUT2
VCTL1
INPUT
VCTL2
W_PA_B8_EN
W_PA_B5_EN
RF_WCDMA_SPDT_1X1
C257 0402 NC
C255 0402 56pF
W_PA_B5_IN
VBAT_RF
C252 0201 100nf
C251 0402 82pF
C253 0402 56pF
VPA_PMU
C250 0201 100nf
L248 CAP0402#56PF
56pF 0402
C247 0402 NC
R246 51R
W_PA_OUT_B5
U204
WCDMA_PA_SKY77765_B5
W_PA_B1_IN
C235 18pF
R236 NC
VBAT_RF
C233 0201 82pF
C232 100nf
VPA_PMU
C231 0201 100nf
C229 2nH 0402
C230 0402 0.5pF
C228 0.5pF
W_PA_OUT_B1
R238 0R
C237 NC
U203
WCDMA_PA_SKY77761_B1
R229 0R
R240 NC
R241 0R
R242 26R
R244 26R
35R R243
PDET

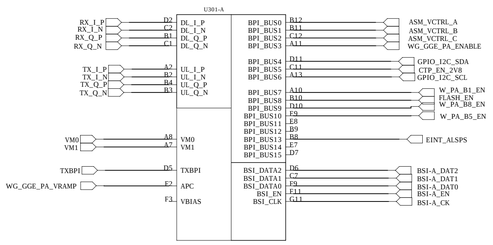
U301-A
RX_I_P
RX_I_N
RX_Q_P
RX_Q_N
TX_I_P
TX_I_N
TX_Q_P
TX_Q_N
VM0
VM1
TXBPI
WG_GGE_PA_VRAMP
DL_I_P
DL_I_N
DL_Q_P
DL_Q_N
UL_I_P
UL_I_N
UL_Q_P
UL_Q_N
VM0
VM1
TXBPI
APC
VBIAS
BPI_BUS0
BPI_BUS1
BPI_BUS2
BPI_BUS3
BPI_BUS4
BPI_BUS5
BPI_BUS6
BPI_BUS7
BPI_BUS8
BPI_BUS9
BPI_BUS10
BPI_BUS11
BPI_BUS12
BPI_BUS13
BPI_BUS14
BPI_BUS15
BSI_DATA2
BSI_DATA1
BSI_DATA0
BSI_EN
BSI_CLK
ASM_VCTRL_A
ASM_VCTRL_B
ASM_VCTRL_C
WG_GGE_PA_ENABLE
GPIO_12C_SDA
CTP_EN_2V8
GPIO_12C_SCL
W_PA_B1_EN
FLASH_EN
W_PA_B8_EN
W_PA_B5_EN
EINT_ALSPS
BSI-A_DAT2
BSI-A_DAT1
BSI-A_DAT0
BSI-A_EN
BSI-A_CK

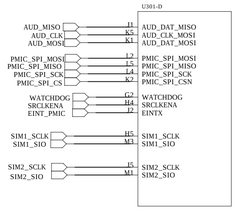
U301-D
AUD_MISO
AUD_CLK
AUD_MOSI
PMIC_SPI_MOSI
PMIC_SPI_MISO
PMIC_SPI_SCK
PMIC_SPI_CS
WATCHDOG
SRCLKENA
EINT_PMIC
SIM1_SCLK
SIM1_SIO
SIM2_SCLK
SIM2_SIO
AUD_DAT_MISO
AUD_CLK_MOSI
AUD_DAT_MOSI
PMIC_SPI_MOSI
PMIC_SPI_MISO
PMIC_SPI_SCK
PMIC_SPI_CSN
WATCHDOG
SRCLKENA
EINTX
SIM1_SCLK
SIM1_SIO
SIM2_SCLK
SIM2_SIO

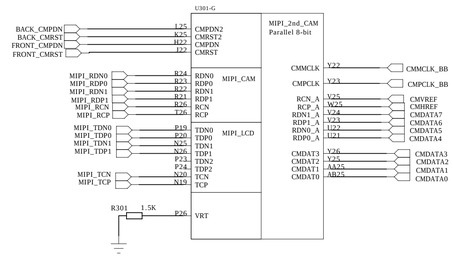
U301-G
BACK_CMPDN
BACK_CMRST
FRONT_CMPDN
FRONT_CMRST
CMPDN2
CMRST2
CMPDN
CMRST
MIPI_2nd_CAM
Parallel 8-bit
MIPI_RDN0
MIPI_RDP0
MIPI_RDN1
MIPI_RDP1
MIPI_RCN
MIPI_RCP
RDN0
RDP0
RDN1
RDP1
RCN
RCP
MIPI_CAM
MIPI_TDN0
MIPI_TDP0
MIPI_TDN1
MIPI_TDP1
MIPI_TCN
MIPI_TCP
TDN0
TDP0
TDN1
TDP1
TDN2
TDP2
TCN
TCP
MIPI_1CD
R301 1.5K
VRT
CMMCLK
CMPCLK
RCN_A
RCP_A
RDN1_A
RDP1_A
RDN0_A
RDP0_A
CMDATA7
CMDATA6
CMDATA5
CMDATA4
CMDATA3
CMDATA2
CMDATA1
CMDATA0
CMMCLK_BB
CMPCLK_BB
CMVREF
CMIRREF
CMDATA7
CMDATA6
CMDATA5
CMDATA4
CMDATA3
CMDATA2
CMDATA1
CMDATA0

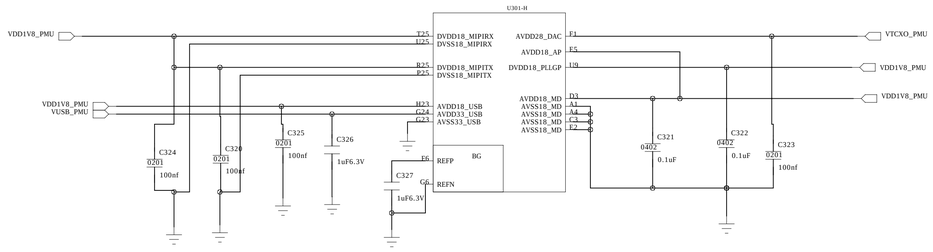
U301-H
VDD1V8_PMU
VDD1V8_PMU
VUSB_PMU
DVDD18_MIPIRX
DVSS18_MIPIRX
DVDD18_MIPITX
DVSS18_MIPITX
AVDD18_USB
AVDD33_USB
AVSS33_USB
REFP
REFN
BG
AVDD28_DAC
AVDD18_AP
DVDD18_PLLGP
AVDD18_MD
AVSS18_MD
AVSS18_MD
AVSS18_MD
AVSS18_MD
VTCXO_PMU
VDD1V8_PMU
VDD1V8_PMU
C324 0201 100nf
C320 0201 100nf
C325 0201 100nf
C326 1uF6.3V
C327 1uF6.3V
C321 0402 0.1uF
C322 0402 0.1uF
C323 0201 100nf

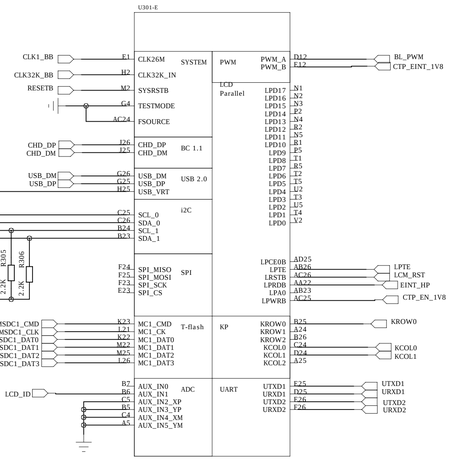
U301-E
CLK1_BB
CLK32K_BB
RESETB
CHD_DP
CHD_DM
USB_DM
USB_DP
SCL_0
SDA_0
SCL_1
SDA_1
VDD1V8_PMU
MSDC1_CMD
MSDC1_CLK
MSDC1_DAT0
MSDC1_DAT1
MSDC1_DAT2
MSDC1_DAT3
LCD_ID
CLK26M
CLK32K_IN
SYSRSTB
TESTMODE
FSOURCE
SYSTEM
CHD_DP
CHD_DM
BC 1.1
USB_DM
USB_DP
USB_VRT
USB 2.0
SCL_0
SDA_0
SCL_1
SDA_1
i2C
SPI_MISO
SPI_MOSI
SPI_SCK
SPI_CS
SPI
MC1_CMD
MC1_CK
MC1_DAT0
MC1_DAT1
MC1_DAT2
MC1_DAT3
T-flash
AUX_IN0
AUX_IN1
AUX_IN2_XP
AUX_IN3_YP
AUX_IN4_XM
AUX_IN5_YM
ADC
PWM
PWM_A
PWM_B
LCD
Parallel
LPD17
LPD16
LPD15
LPD14
LPD13
LPD12
LPD11
LPD10
LPD9
LPD8
LPD7
LPD6
LPD5
LPD4
LPD3
LPD2
LPD1
LPD0
LPCE0B
LPTE
LRSTB
LPRDB
LPA0
LPWRB
KP
KROW0
KROW1
KROW2
KCOL0
KCOL1
KCOL2
UART
UTXD1
URXD1
UTXD2
URXD2
R302 5.1K
R305 2.2K
R306 2.2K
BL_PWM
CTP_EINT_1V8
LPTE
LCM_RST
EINT_HP
CTP_EN_1V8
KROW0
KCOL0
KCOL1
UTXD1
URXD1
UTXD2
URXD2

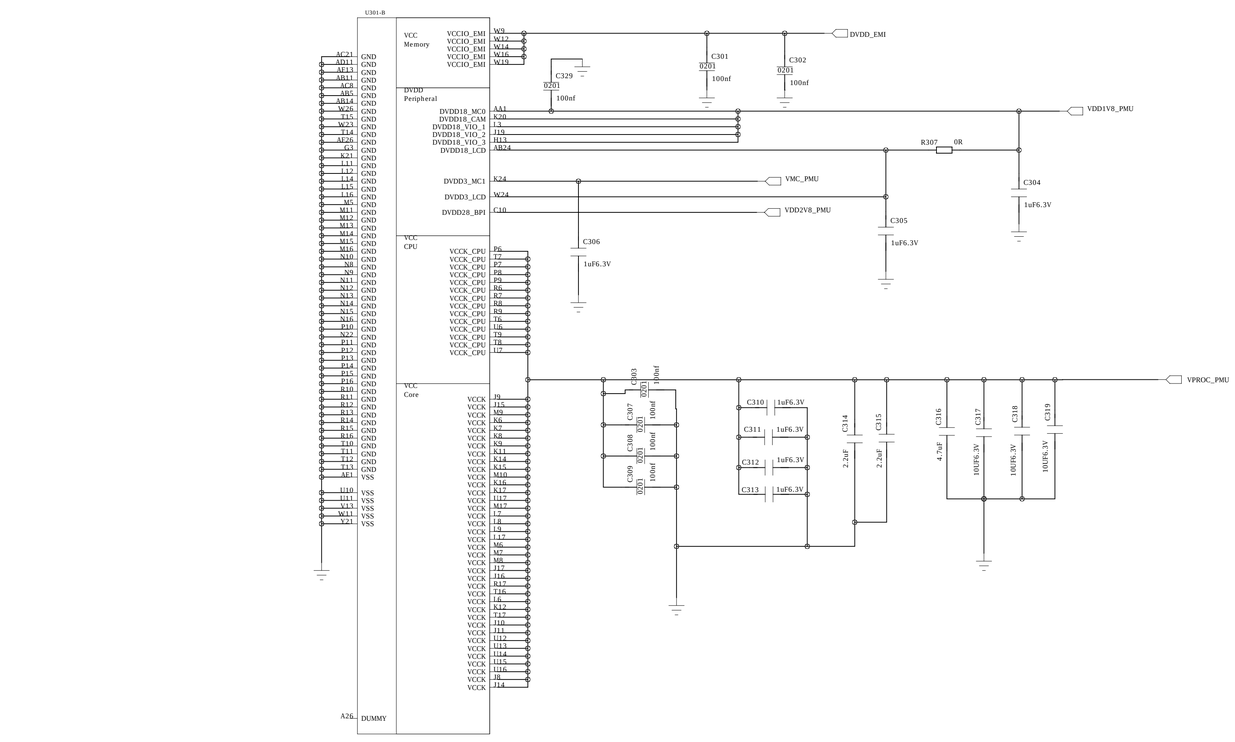
U301-8
VCC Memory
VCCIO_EMI
DVDD Peripheral
DVDD18_MC0
DVDD18_CAM
DVDD18_VIO_1
DVDD18_VIO_2
DVDD18_VIO_3
DVDD18_LCD
DVDD3_MC1
DVDD3_LCD
DVDD28_BPI
VCC CPU
VCCK_CPU
VCC Core
VCCK
GND
VSS
DUMMY
DVDD_EMI
VDD1V8_PMU
VMC_PMU
VDD2V8_PMU
VPROC_PMU
C301 0201 100nf
C302 0201 100nf
C329 0201 100nf
R307 0R
C304 1uF6.3V
C305 1uF6.3V
C306 1uF6.3V
C303 0201 100nf
C307 0201 100nf
C308 0201 100nf
C309 0201 100nf
C310 1uF6.3V
C311 1uF6.3V
C312 1uF6.3V
C313 1uF6.3V
C314 2.2uF
C315 2.2uF
C316 4.7uF
C317 10UF6.3V
C318 10UF6.3V
C319 10UF6.3V

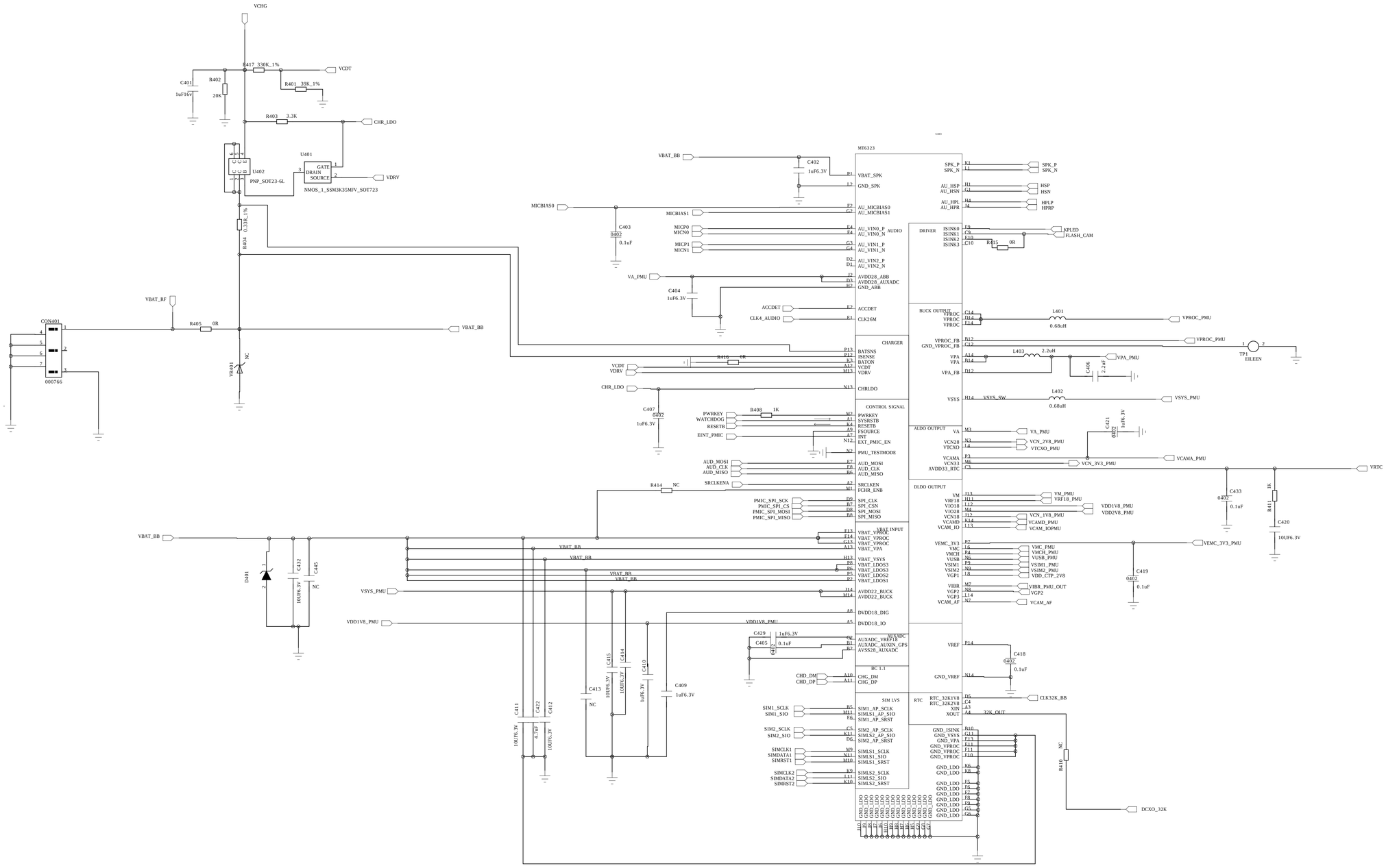
VCHG
R417 330K_1%
VCDT
R401 39K_1%
C401
1uF16v
R402
20K
R403 3.3K
CHR_LDO
U401
GATE
DRAIN
SOURCE
VDRV
NMOS_1_SSM3K35MFV_SOT723
U402
PNP_SOT23-6L
R404
0.338_1%
VBAT_RF
CON401
000766
R405 0R
VBAT_BB
VR401
NC
MT6323
VBAT_BB
C402
1uF6.3V
VBAT_SPK
GND_SPK
MICBIAS0
MICBIAS1
C403
0402
0.1uF
MICP0
MICN0
MICP1
MICN1
AU_VIN0_P
AU_VIN0_N
AU_VIN1_P
AU_VIN1_N
AU_VIN2_P
AU_VIN2_N
AUDIO
VA_PMU
C404
1uF6.3V
AVDD28_ABB
AVDD28_AUXADC
GND_ABB
ACCDET
CLK4_AUDIO
CLK26M
CHARGER
BATSNS
ISENSE
BATON
VCDT
VDRV
R416 0R
CHRLDO
C407
0402
1uF6.3V
CONTROL SIGNAL
PWRKEY
WATCHDOG
RESETB
EINT_PMIC
R408 1K
FSOURCE
INT
EXT_PMIC_EN
PMU_TESTMODE
AUD_MOSI
AUD_CLK
AUD_MISO
SRCLKENA
SRCLKEN
FCHR_ENB
R414 NC
PMIC_SPI_SCK
PMIC_SPI_CS
PMIC_SPI_MOSI
PMIC_SPI_MISO
SPI_CLK
SPI_CSN
SPI_MOSI
SPI_MISO
VBAT INPUT
VBAT_VPROC
VBAT_VPA
VBAT_VSYS
VBAT_LDOS3
VBAT_LDOS2
VBAT_LDOS1
VSYS_PMU
AVDD22_BUCK
VDD1V8_PMU
DVDD18_DIG
DVDD18_IO
AUXADC
AUXADC_VREF18
AUXADC_AUXIN_GPS
AVSS28_AUXADC
C429
1uF6.3V
C405
0402
0.1uF
BC 1.1
CHD_DM
CHD_DP
CHG_DM
CHG_DP
SIM LVS
SIM1_SCLK
SIM1_SIO
SIM1_AP_SCLK
SIMLS1_AP_SIO
SIM1_AP_SRST
SIM2_SCLK
SIM2_SIO
SIM2_AP_SCLK
SIMLS2_AP_SIO
SIM2_AP_SRST
SIMCLK1
SIMDATA1
SIMRST1
SIMLS1_SCLK
SIMLS1_SIO
SIMLS1_SRST
SIMCLK2
SIMDATA2
SIMRST2
SIMLS2_SCLK
SIMLS2_SIO
SIMLS2_SRST
GND_LDO
D401
C432
10UF6.3V
C445
NC
C411
10UF6.3V
C422
4.7uF
C412
10UF6.3V
C413
NC
C415
10UF6.3V
C414
10UF6.3V
C410
1uF6.3V
C409
1uF6.3V
SPK_P
SPK_N
AU_HSP
AU_HSN
HSP
HSN
AU_HPL
AU_HPR
HPLP
HPRP
DRIVER
ISINK0
ISINK1
ISINK2
ISINK3
KPLED
FLASH_CAM
R415 0R
BUCK OUTPUT
VPROC
L401
0.68uH
VPROC_PMU
VPROC_FB
GND_VPROC_FB
TP1
EILEEN
VPA
L403
2.2uH
C406
2.2uF
VPA_PMU
VPA_FB
VSYS
VSYS_SW
L402
0.68uH
VSYS_PMU
ALDO OUTPUT
VA
VA_PMU
VCN28
VTCXO
VCN_2V8_PMU
VTCXO_PMU
C421
0402
1uF6.3V
VCAMA
VCN33
AVDD33_RTC
VCAMA_PMU
VCN_3V3_PMU
VRTC
C433
0402
0.1uF
1K
R411
C420
10UF6.3V
DLDO OUTPUT
VM
VRF18
VIO18
VIO28
VCN18
VCAMD
VCAM_IO
VM_PMU
VRF18_PMU
VDD1V8_PMU
VDD2V8_PMU
VCN_1V8_PMU
VCAMD_PMU
VCAM_IOPMU
VEMC_3V3
VMC
VMCH
VUSB
VSIM1
VSIM2
VGP1
VEMC_3V3_PMU
VMC_PMU
VMCH_PMU
VUSB_PMU
VSIM1_PMU
VSIM2_PMU
VDD_CTP_2V8
C419
0402
0.1uF
VIBR
VGP2
VGP3
VCAM_AF
VIBR_PMU_OUT
VGP2
VCAM_AF
VREF
C418
0402
0.1uF
GND_VREF
RTC
RTC_32K1V8
RTC_32K2V8
XIN
XOUT
CLK32K_BB
32K_OUT
R410
NC
DCXO_32K
GND_ISINK
GND_VSYS
GND_VPA
GND_VPROC
GND_LDO

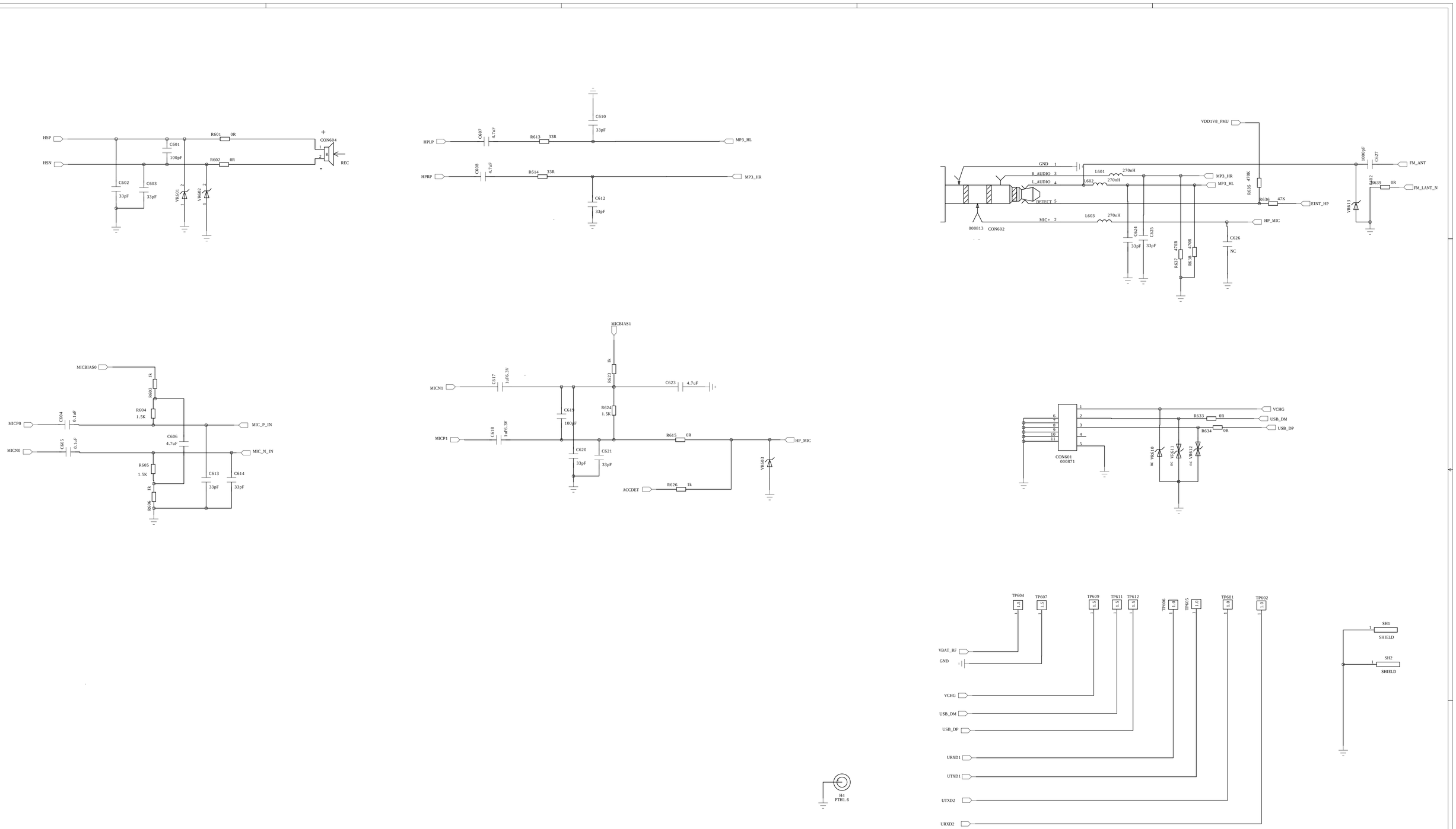

Title	06 Audio,I/O,USB
Size A1	Document Number: MT6575 PHONE
Rev	V1.0
Date: Friday, April 29, 2011	Sheet 6 of 9

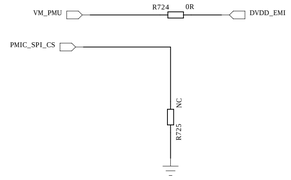
VM_PMU
R724
0R
DVDD_EMI
PMIC_SPI_CS
R725
NC

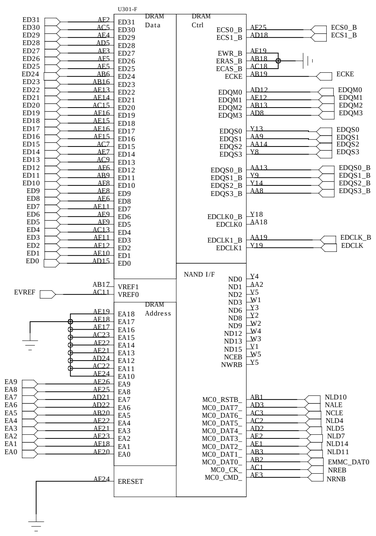
U301-F
DRAM Data
DRAM Ctrl
DRAM Address
NAND I/F
ECS0_B
ECS1_B
ECKE
EDQM0
EDQM1
EDQM2
EDQM3
EDQS0
EDQS1
EDQS2
EDQS3
EDQS0_B
EDQS1_B
EDQS2_B
EDQS3_B
EDCLK0_B
EDCLK0
EDCLK1_B
EDCLK1
EDCLK_B
EDCLK
EVREF
VREF1
VREF0
ERESET
NLD10
NALE
NCLE
NLD4
NLD5
NLD7
NLD14
NLD11
EMMC_DAT0
NREB
NRNB

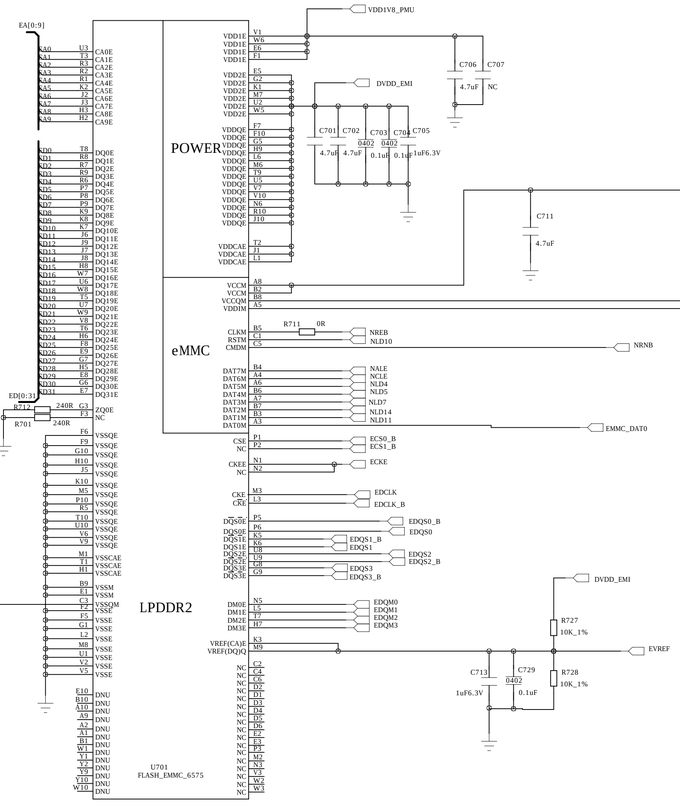
EA[0:9]
ED[0:31]
POWER
eMMC
LPDDR2
U701
FLASH_DMMC_6575
VDD1V8_PMU
DVDD_EMI
VEMC_3V3_PMU
EVREF
R727
10K_1%
R728
10K_1%
C713
1uF6.3V
C729
0.1uF
C709
0.1uF
C710
1uF6.3V
C711
4.7uF
C706
4.7uF
C707
NC
C701
4.7uF
C702
4.7uF
C703
0.1uF
C704
0.1uF
C705
1uF6.3V
R711
0R
R712
240R
R701
240R
NRNB
EMMC_DAT0
ECKE
EDCLK
EDCLK_B
EDQS0_B
EDQS0
EDQS1_B
EDQS1
EDQS2
EDQS2_B
EDQS3_B
EDQS3
EDQM0
EDQM1
EDQM2
EDQM3

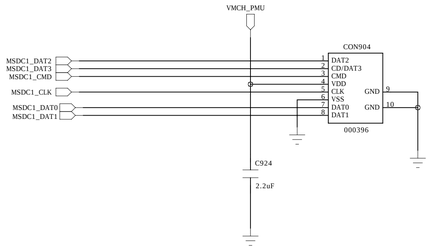
VMCH_PMU
CON904
MSDC1_DAT2
MSDC1_DAT3
MSDC1_CMD
MSDC1_CLK
MSDC1_DAT0
MSDC1_DAT1
DAT2
CD/DAT3
CMD
VDD
CLK
VSS
DAT0
DAT1
GND
GND
000396
C924
2.2uF

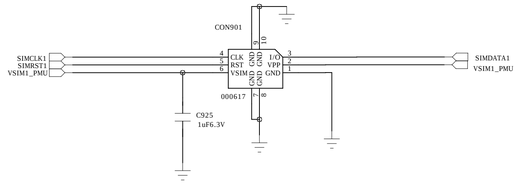
CON901
SIMCLK1
SIMRST1
VSIM1_PMU
CLK
RST
VSIM
GND
GND
GND
I/O
VPP
GND
SIMDATA1
VSIM1_PMU
000617
C925
1uF6.3V

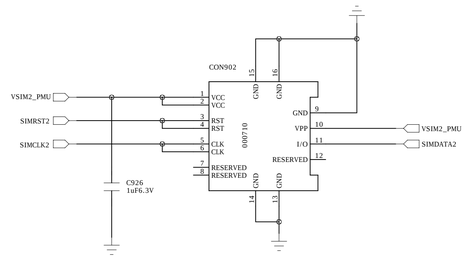
CON902
VSIM2_PMU
SIMRST2
SIMCLK2
VCC
VCC
RST
RST
CLK
CLK
RESERVED
RESERVED
GND
GND
GND
GND
VPP
I/O
RESERVED
VSIM2_PMU
SIMDATA2
000710
C926
1uF6.3V

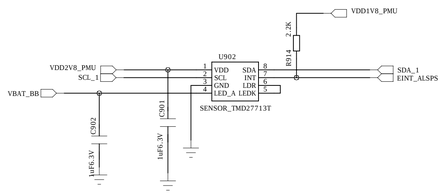
VDD1V8_PMU
2.2K
R913
U902
VDD2V8_PMU
SCL_1
VBAT_BB
VDD
SCL
GND
LED_A
SDA
INT
LDR
LEDK
SDA_1
EINT_ALSPS
SENSOR_TMD27713T
C902
1uF6.3V
C901
1uF6.3V

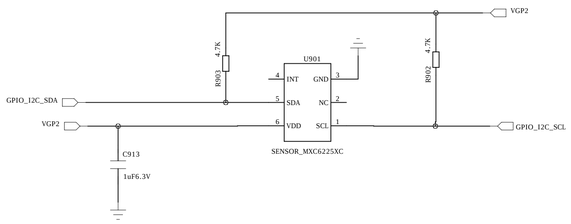
VGP2
4.7K
R901
4.7K
R902
U901
GPIO_I2C_SDA
VGP2
INT
SDA
VDD
GND
NC
SCL
GPIO_I2C_SCL
SENSOR_MXC6225XC
C913
1uF6.3V

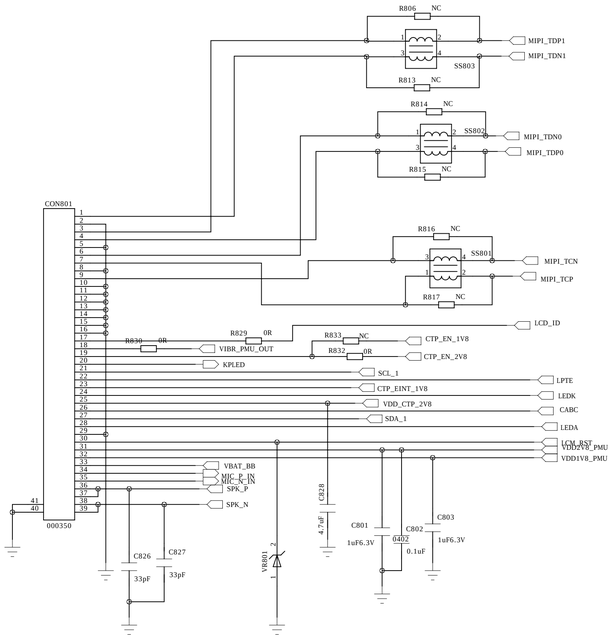
CON801
000350
R806 NC
R813 NC
SS803
MIPI_TDP1
MIPI_TDN1
R814 NC
R815 NC
SS802
MIPI_TDN0
MIPI_TDP0
R816 NC
R817 NC
SS801
MIPI_TCN
MIPI_TCP
LCD_ID
R830 0R
R829 0R
VIBR_PMU_OUT
R833 NC
R832 0R
CTP_EN_1V8
CTP_EN_2V8
KPLED
SCL_1
LPTE
CTP_EINT_1V8
LEDK
VDD_CTP_2V8
CABC
SDA_1
LEDA
LCM_RST
VDD2V8_PMU
VDD1V8_PMU
VBAT_BB
MIC_P_IN
MIC_N_IN
SPK_P
SPK_N
C826 33pF
C827 33pF
VR801
C828 4.7uF
C801 1uF6.3V
C802 0402 0.1uF
C803 1uF6.3V

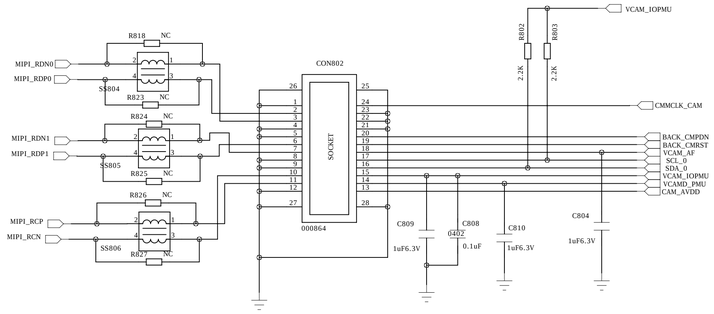
R818 NC
MIPI_RDN0
MIPI_RDP0
SS804
R823 NC
R824 NC
MIPI_RDN1
MIPI_RDP1
SS805
R825 NC
R826 NC
MIPI_RCP
MIPI_RCN
SS806
R827 NC
CON802
SOCKET
000864
VCAM_IOPMU
R802 2.2K
R803 2.2K
CMMCLK_CAM
BACK_CMPDN
BACK_CMRST
VCAM_AF
SCL_0
SDA_0
VCAM_IOPMU
VCAMD_PMU
CAM_AVDD
C809 1uF6.3V
C808 0402 0.1uF
C810 1uF6.3V
C804 1uF6.3V

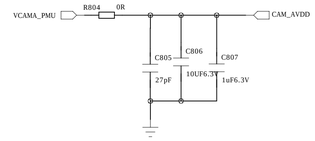
VCAMA_PMU
R804 0R
CAM_AVDD
C805 27pF
C806 10UF6.3V
C807 1uF6.3V

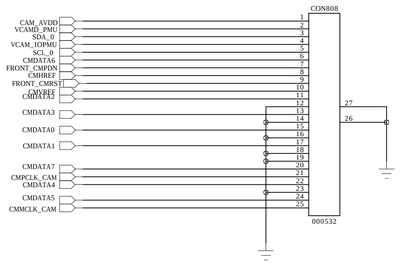
CON808
000532
CAM_AVDD
VCAMD_PMU
SDA_0
VCAM_IOPMU
SCL_0
CMDATA6
FRONT_CMPDN
CMIBREF
FRONT_CMRST
CMVREF
CMDATA2
CMDATA3
CMDATA0
CMDATA1
CMDATA7
CMPCLK_CAM
CMDATA4
CMDATA5
CMMCLK_CAM

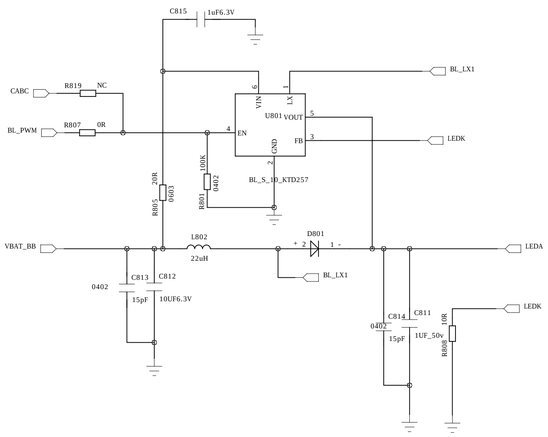
C815 1uF6.3V
CABC
R819 NC
BL_PWM
R807 0R
VIN
LX
U801
VOUT
EN
FB
GND
BL_S_10_KTD257
BL_LX1
LEDK
R805 20R 0603
R804 100K 0402
VBAT_BB
L802 22uH
D801
LEDA
C813 0402 15pF
C812 10UF6.3V
C814 0402 15pF
C811 1UF_50v
R808 10R

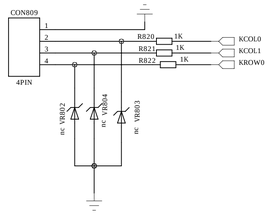
CON809
4PIN
R820 1K
R821 1K
R822 1K
KCOL0
KCOL1
KROW0
nc VR802
nc VR804
nc VR803

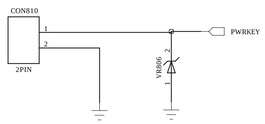
CON810
2PIN
PWRKEY
VR806

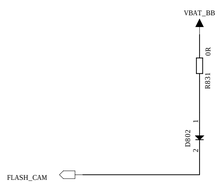
VBAT_BB
R831 0R
D802
FLASH_CAM

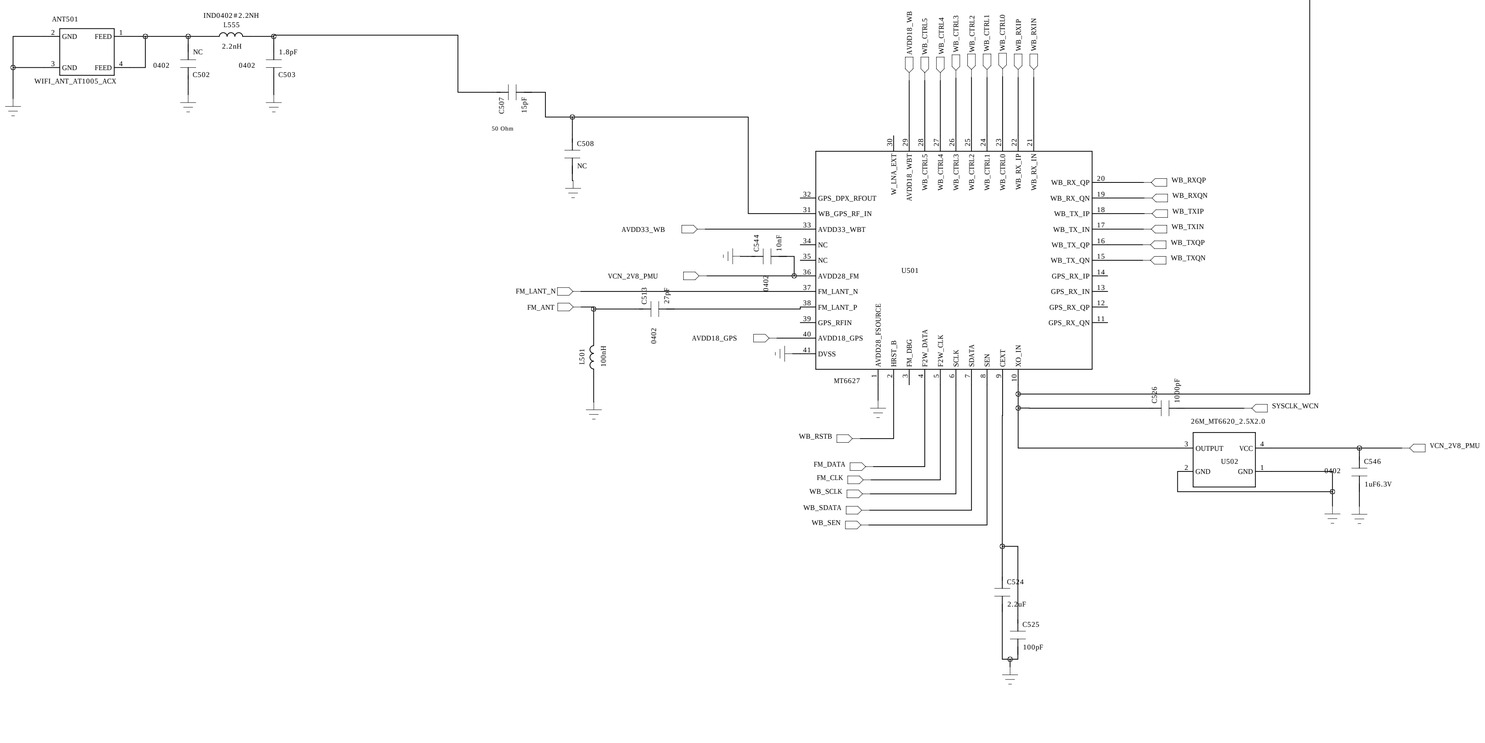
ANT501
GND
FEED
WIFI_ANT_AT1005_ACX
IND0402#2.2NH
L555
2.2nH
0402
NC
C502
1.8pF
C503
C507
15pF
50 Ohm
C508
U501
GPS_DPX_RFOUT
WB_GPS_RF_IN
AVDD33_WB
AVDD33_WBT
C544
10uF
VCN_2V8_PMU
AVDD28_FM
FM_LANT_N
FM_ANT
C513
27pF
FM_LANT_P
GPS_RFIN
AVDD18_GPS
DVSS
L501
100nH
MT6627
AVDD20_FSOURCE
HRST_B
FM_DBG
F2W_DATA
F2W_CLK
SCLK
SDATA
SEN
CEXT
XO_IN
WB_RSTB
FM_DATA
FM_CLK
WB_SCLK
WB_SDATA
WB_SEN
AVDD18_WB
WB_CTRL5
WB_CTRL4
WB_CTRL3
WB_CTRL2
WB_CTRL1
WB_CTRL0
WB_RXIP
WB_RXIN
W_LNA_EN
AVDD18_WBT
WB_RX_QP
WB_RX_QN
WB_TX_IP
WB_TX_IN
WB_TX_QP
WB_TX_QN
GPS_RX_IP
GPS_RX_IN
GPS_RX_QP
GPS_RX_QN
WB_RXQP
WB_RXQN
WB_TXIP
WB_TXIN
WB_TXQP
WB_TXQN
C526
100pF
SYSCLK_WCN
26M_MT6620_2.5X2.0
OUTPUT
VCC
U502
GND
C546
1uF6.3V
C524
2.2uF
C525
100pF

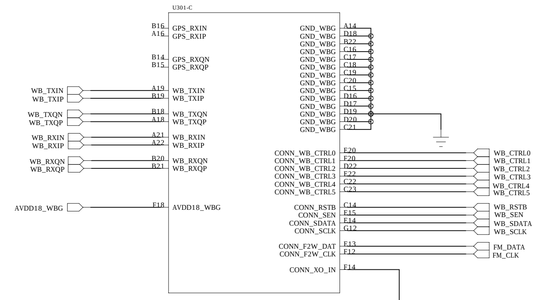
U301-C
GND_WBG
GPS_RXIN
GPS_RXIP
GPS_RXQN
GPS_RXQP
WB_TXIN
WB_TXIP
WB_TXQN
WB_TXQP
WB_RXIN
WB_RXIP
WB_RXQN
WB_RXQP
AVDD18_WBG
CONN_WB_CTRL0
CONN_WB_CTRL1
CONN_WB_CTRL2
CONN_WB_CTRL3
CONN_WB_CTRL4
CONN_WB_CTRL5
CONN_RSTB
CONN_SEN
CONN_SDATA
CONN_SCLK
CONN_F2W_DAT
CONN_F2W_CLK
CONN_XO_IN
WB_CTRL0
WB_CTRL1
WB_CTRL2
WB_CTRL3
WB_CTRL4
WB_CTRL5
WB_RSTB
WB_SEN
WB_SDATA
WB_SCLK
FM_DATA
FM_CLK

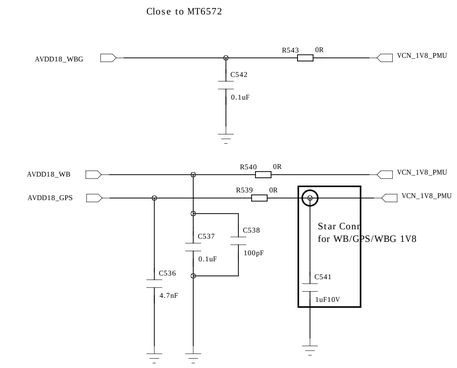
Close to MT6572
AVDD18_WBG
R543
0R
VCN_1V8_PMU
C542
0.1uF
AVDD18_WB
R540
AVDD18_GPS
R539
C537
0.1uF
C538
100pF
C536
4.7uF
Star Conn
for WB/GPS/WBG 1V8
C541
1uF10V

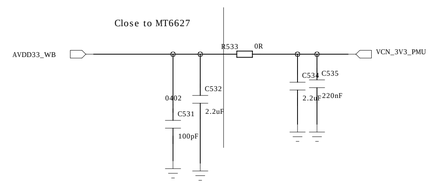
Close to MT6627
AVDD33_WB
R533
0R
VCN_3V3_PMU
C532
2.2uF
C531
100pF
C534
2.2uF
C535
220nF