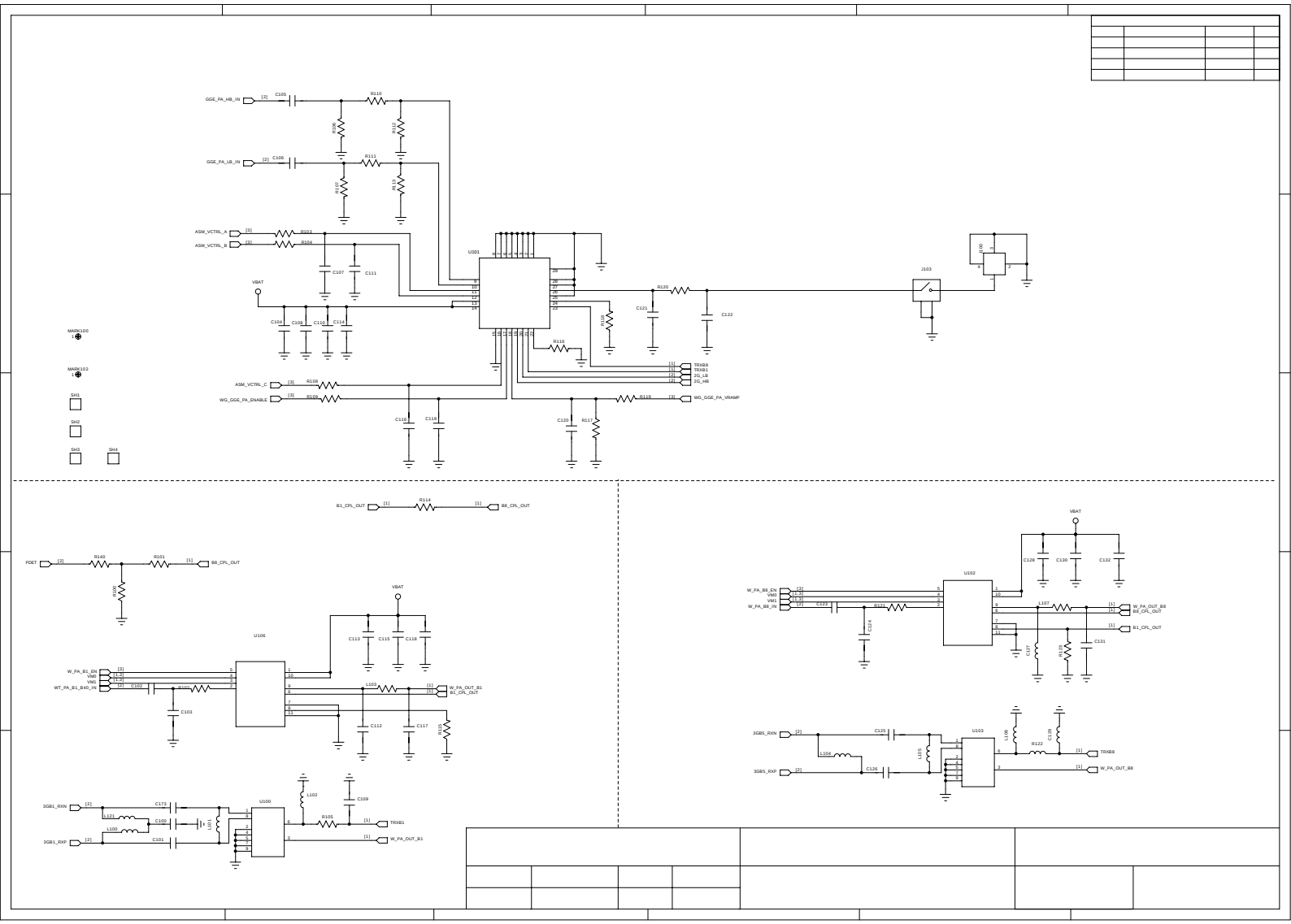
GGE_PA_HB_IN
GGE_PA_LB_IN
ASM_VCTRL_A
ASM_VCTRL_B
ASM_VCTRL_C
WG_GGE_PA_ENABLE
VBAT
U101
J102
J100
TRXB8
TRXB1
2G_LB
2G_HB
WG_GGE_PA_VRAMP
B1_CPL_OUT
B8_CPL_OUT
PDET
U105
U106
W_PA_B1_EN
VM2
VM1
WT_PA_B1_B40_IN
W_PA_OUT_B1
B1_CPL_OUT
U100
3GB1_RXN
3GB1_RXP
TRXB1
W_PA_OUT_B1
U102
W_PA_B8_EN
VM2
VM1
W_PA_B8_IN
W_PA_OUT_B8
B8_CPL_OUT
B1_CPL_OUT
U103
3GB5_RXN
3GB5_RXP
TRXB8
W_PA_OUT_B8

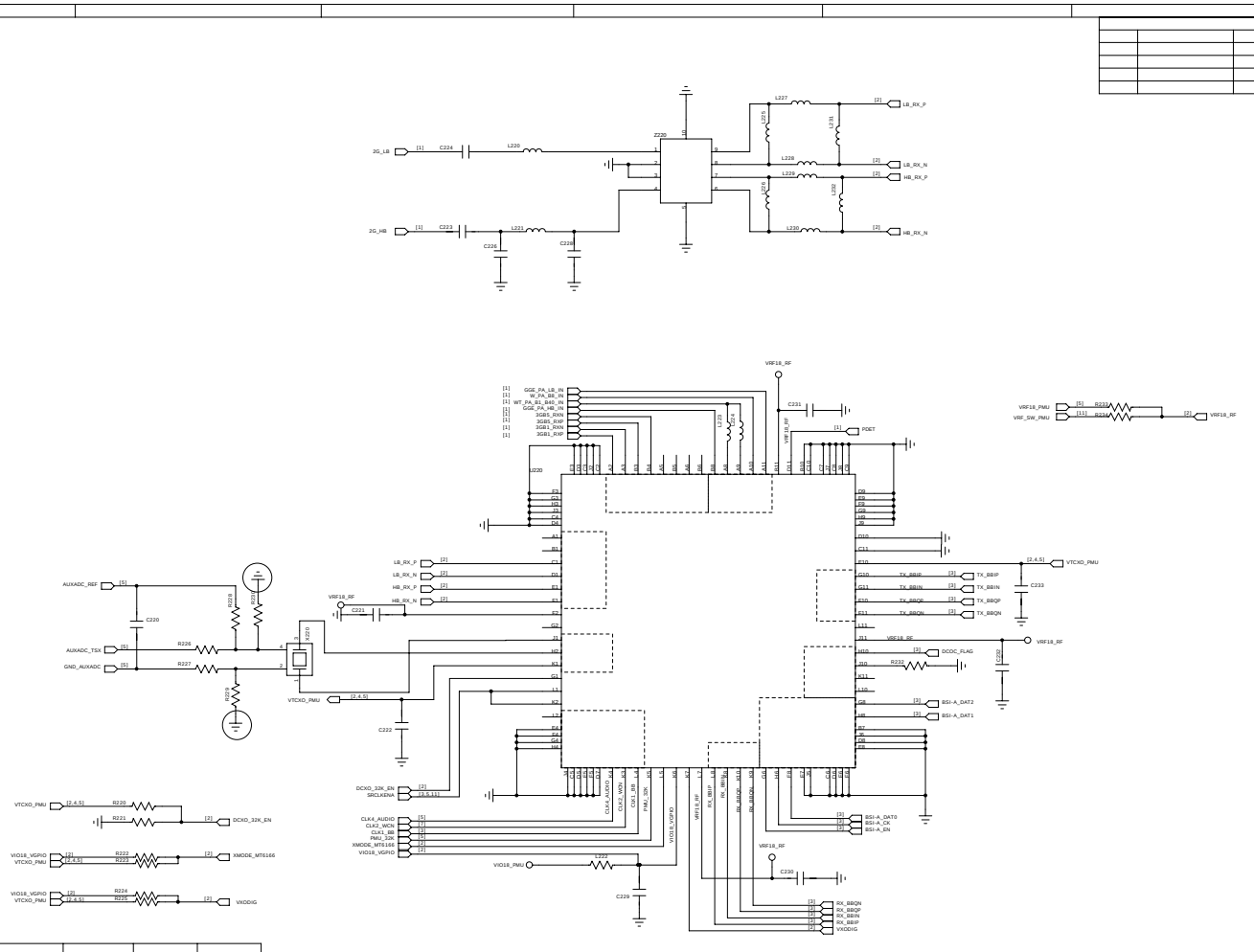
2G_LB
2G_HB
C224
C223
L220
L221
C226
C228
Z220
L227
L228
L229
L230
L231
L232
L233
L234
L235
L236
LB_RX_P
LB_RX_N
HB_RX_P
HB_RX_N
VRF18_RF
C231
PDET
VRF18_PMU
VRF_SW_PMU
R233
R234
U220
GGE_PA_LB_IN
W_PA_BB_IN
WT_PA_B1_B40_IN
GGE_PA_HB_IN
3GB1_RXN
3GB1_RXP
3GB1_RXN
3GB1_RXP
L224
L225
VRF18_RF
C221
AUXADC_REF
AUXADC_TSX
GND_AUXADC
C220
R226
R227
R228
R229
R230
R231
VTCXO_PMU
C222
TX_BBIP
TX_BBIN
TX_BBQP
TX_BBQN
C233
C232
DCOC_FLAG
BSI-A_DAT2
BSI-A_DAT1
BSI-A_DAT0
BSI-A_CK
BSI-A_EN
RX_BBQN
RX_BBQP
RX_BBIN
RX_BBIP
VKDDIG
DCXO_32K_EN
SRCLKENA
CLK4_AUDIO
CLK2_WCN
CLK1_BB
PMU_32K
XMODE_MT6166
VIO18_VGPIO
VIO18_PMU
L222
C229
C230
R220
R221
R222
R223
R224
R225
DCXO_32K_EN
XMODE_MT6166
VKDDIG

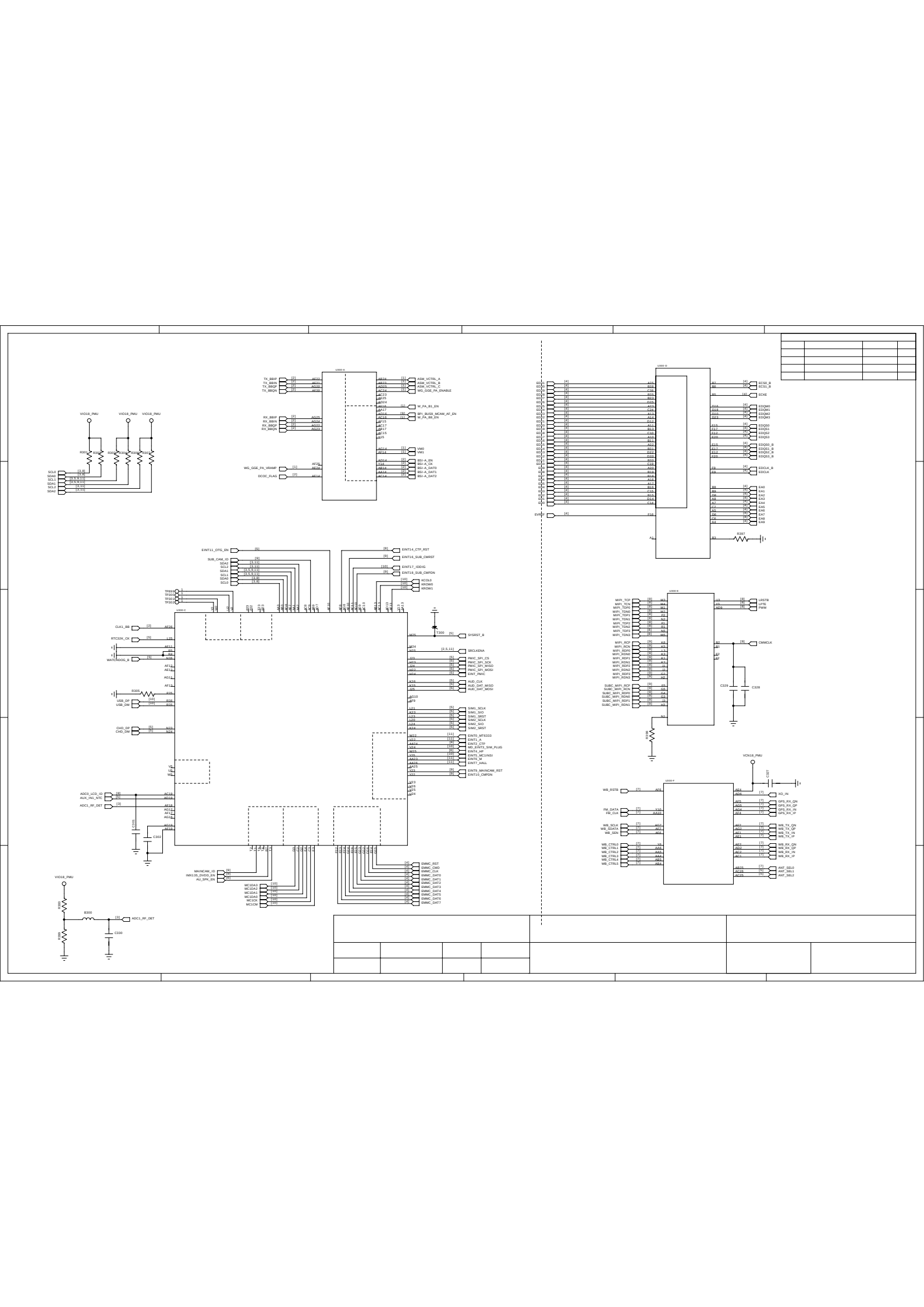
U300-A
U300-C
U300-D
U300-E
U300-F
VIO18_PMU
VCN18_PMU
TX_BBIP
TX_BBIN
TX_BBQP
TX_BBQN
RX_BBIP
RX_BBIN
RX_BBQP
RX_BBQN
WG_GGE_PA_VRAMP
DCOC_FLAG
ASM_VCTRL_A
ASM_VCTRL_B
WG_GGE_PA_ENABLE
W_PA_B1_EN
BPI_BUS9_MCAM_AF_EN
W_PA_B8_EN
VM0
VM1
BSI-A_EN
BSI-A_CK
BSI-A_DAT0
BSI-A_DAT1
BSI-A_DAT2
SCL0
SDA0
SCL1
SDA1
SCL2
SDA2
EDCS0_B
EDCS1_B
ECKE
EDQM0
EDQM1
EDQM2
EDQM3
EDQS0
EDQS1
EDQS2
EDQS3
EDQS0_B
EDQS1_B
EDQS2_B
EDQS3_B
EDCLK_B
EDCLK
EA0
EA1
EA2
EA3
EA4
EA5
EA6
EA7
EA8
EA9
EVDD2
R207
EINT11_OTG_EN
SUB_CAM_ID
EINT14_CTP_RST
EINT16_SUB_CMRST
EINT17_IDDIG
EINT18_SUB_CMPDN
KCOL0
KROW0
KROW1
TP800
TP802
TP801
TP803
CLK1_BB
RTC32K_CK
WATCHDOG_B
R305
USB_DP
USB_DM
CHD_DP
CHD_DM
SYSRST_B
SRCLKENA
PMIC_SPI_CS
PMIC_SPI_SCK
PMIC_SPI_MISO
PMIC_SPI_MOSI
EINT_PMIC
AUD_CLK
AUD_DAT_MISO
AUD_DAT_MOSI
SIM1_SCLK
SIM1_SIO
SIM1_SRST
SIM2_SCLK
SIM2_SIO
SIM2_SRST
EINT0_MT6333
EINT1_A
EINT2_CTP
MD_EINT3_SIM_PLUG
EINT4_HP
EINT5_MC1INSI
EINT6_M
EINT7_HAL1
EINT9_MAINCAM_RST
EINT10_CMPDN
ADC3_LCD_ID
AUX_IN1_NTC
ADC1_RF_DET
C310
C302
MAINCAM_ID
IMX135_DVDD_EN
AU_SPK_EN
MC1DA3
MC1DA2
MC1DA1
MC1DA0
MC1CK
MC1CM
SMMC_RST
SMMC_CMD
SMMC_CLK
SMMC_DAT0
SMMC_DAT1
SMMC_DAT2
SMMC_DAT3
SMMC_DAT4
SMMC_DAT5
SMMC_DAT6
SMMC_DAT7
R300
C330
MIPI_TCP
MIPI_TCN
MIPI_TDN0
MIPI_TDP0
MIPI_TDN1
MIPI_TDP1
MIPI_TDN2
MIPI_TDP2
MIPI_TDN3
MIPI_TDP3
MIPI_RCP
MIPI_RCN
MIPI_RDP0
MIPI_RDN0
MIPI_RDP1
MIPI_RDN1
MIPI_RDP2
MIPI_RDN2
MIPI_RDP3
MIPI_RDN3
SUBC_MIPI_RCP
SUBC_MIPI_RCN
SUBC_MIPI_RDP0
SUBC_MIPI_RDN0
SUBC_MIPI_RDP1
SUBC_MIPI_RDN1
LRSTB
LPTE
PWM
CMMCLK
C329
C328
R308
C307
WB_RSTB
FM_DATA
FM_CLK
WB_SCLK
WB_SDATA
WB_SEN
WB_CTRL0
WB_CTRL1
WB_CTRL2
WB_CTRL3
WB_CTRL4
WB_CTRL5
NO_IN
GPS_RX_QN
GPS_RX_QP
GPS_RX_IN
GPS_RX_IP
WB_TX_QN
WB_TX_QP
WB_TX_IN
WB_TX_IP
WB_RX_QN
WB_RX_QP
WB_RX_IN
WB_RX_IP
ANT_SEL0
ANT_SEL1
ANT_SEL2

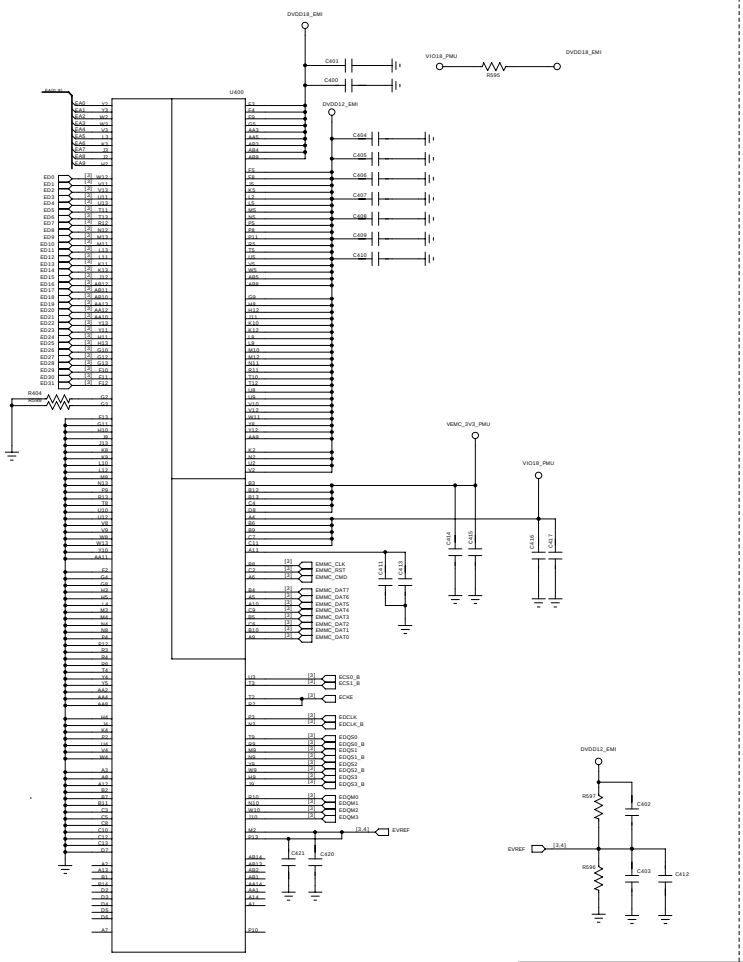
DVDD18_EMI
VIO18_PMU
RS95
DVDD12_EMI
U400
VEMC_3V3_PMU
EMMC_CLK
EMMC_RST
EMMC_CMD
EMMC_DAT7
EMMC_DAT6
EMMC_DAT5
EMMC_DAT4
EMMC_DAT3
EMMC_DAT2
EMMC_DAT1
EMMC_DAT0
ECS0_B
ECS1_B
ECKE
EDCLK
EDCLK_B
EDQS0
EDQS0_B
EDQS1
EDQS1_B
EDQS2
EDQS2_B
EDQS3
EDQS3_B
EDQM0
EDQM1
EDQM2
EDQM3
EVREF
RS97
RS98
C402
C403
C412

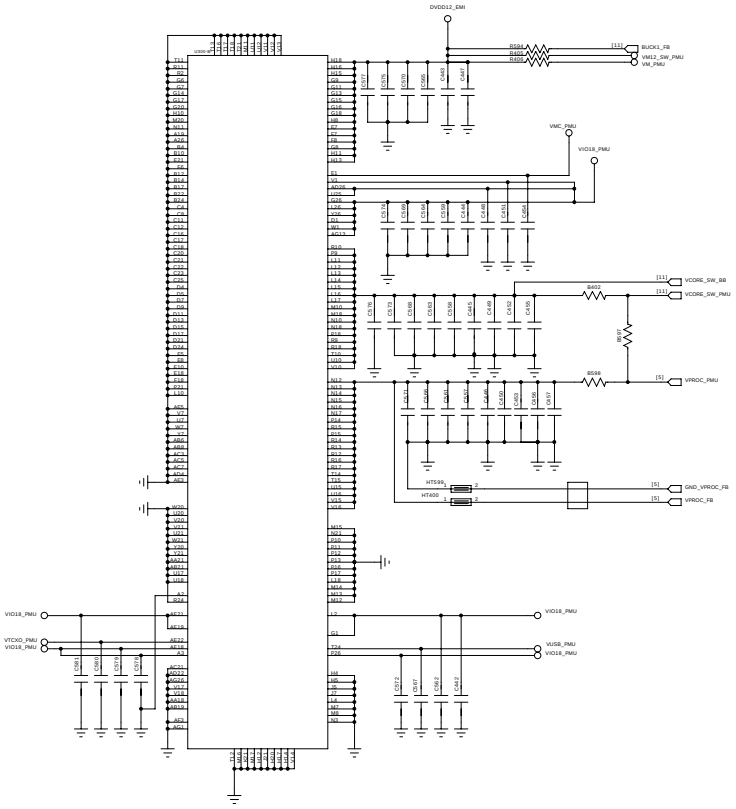
DVDD12_EMI
BUCK1_FB
VM12_SW_PMU
VM_PMU
VMC_PMU
VIO18_PMU
VCORE_SW_BB
VCORE_SW_PMU
VPROC_PMU
GND_VPROC_FB
VPROC_FB
VTCXO_PMU
VUSB_PMU

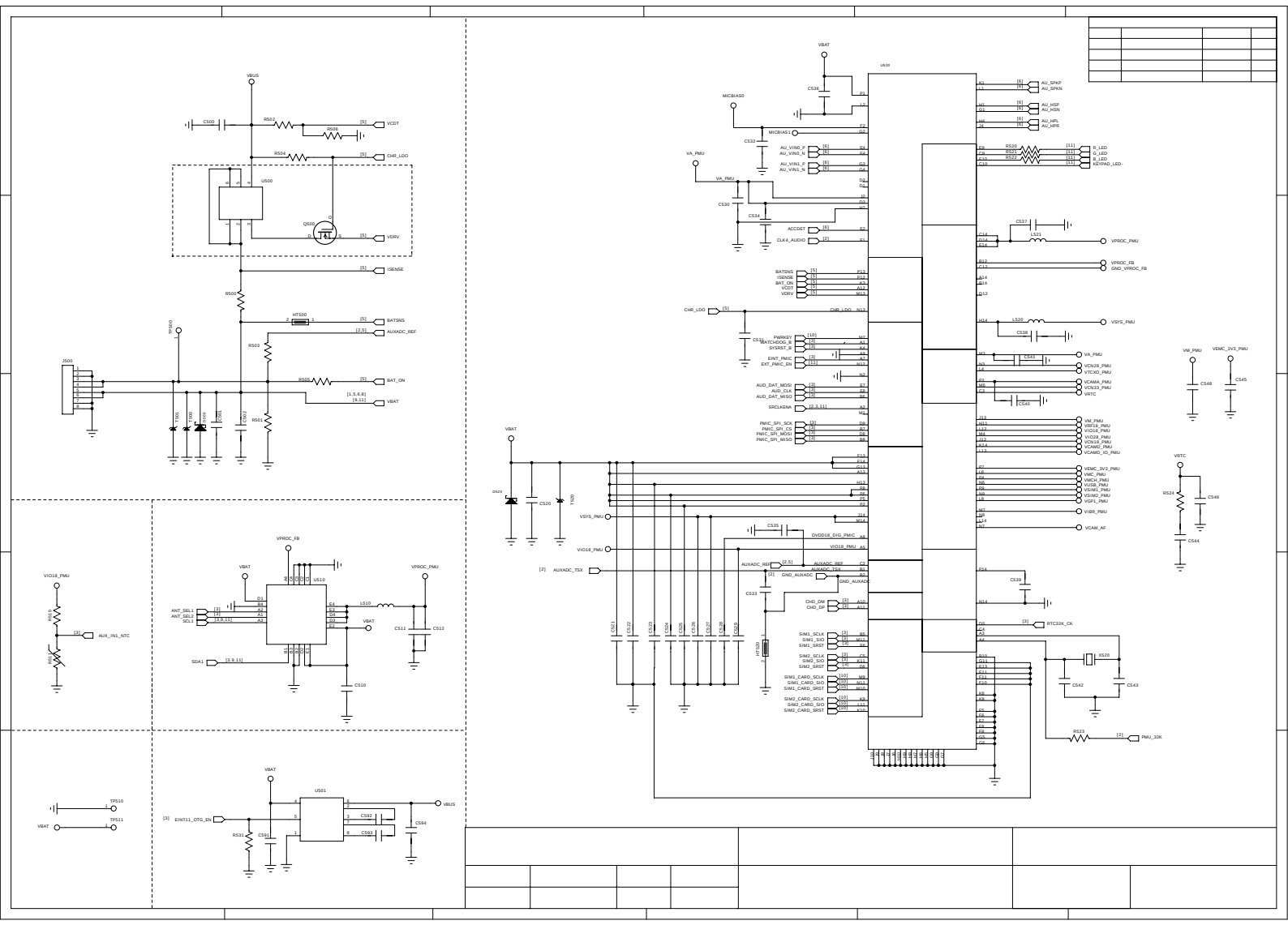
VBUS
CS00
RS02
RS06
VCDT
RS04
CHR_LDO
US00
QS00
VDRV
ISENSE
RS00
HT500
BATSNS
AUXADC_REF
RS03
RS05
BAT_ON
VBAT
JS00
TP510
TS01
TS00
TS10
CS01
CS00/2
RS01
VIO18_PMU
RS11
RS12
AUX_IN1_NTC
VPROC_FB
VBAT
US10
ANT_SEL1
ANT_SEL2
SCL1
SDA1
LS10
VPROC_PMU
CS11
CS12
CS10
TP510
TP511
VBAT
US01
EINT11_OTG_EN
RS14
CS91
CS92
CS93
CS94
VBUS
US20
VBAT
MICBIAS0
MICBIAS1
VA_PMU
CS36
CS32
CS30
CS34
AU_VIN0_P
AU_VIN0_N
AU_VIN1_P
AU_VIN1_N
ACCDET
CLK4_AUDIO
BATSNS
ISENSE
BAT_ON
VCDT
VDRV
CHR_LDO
CS31
PWRKEY
WATCHDOG_B
SYSRST_B
EINT_PMIC
EXT_PMIC_EN
AUD_DAT_MOSI
AUD_CLK
AUD_DAT_MISO
SRCLKENA
PMIC_SPI_SCK
PMIC_SPI_CS
PMIC_SPI_MOSI
PMIC_SPI_MISO
DS20
CS20
TS00
VSYS_PMU
VIO18_PMU
AUXADC_TSX
CS35
DVDD18_DIG_PMIC
AUXADC_REF
AUXADC_TSX
GND_AUXADC
CS33
CHD_DM
CHD_DP
CS21
CS22
CS23
CS24
CS25
CS26
CS27
CS28
CS29
HT320
SIM1_SCLK
SIM1_SIO
SIM1_SRST
SIM2_SCLK
SIM2_SIO
SIM2_SRST
SIM1_CARD_SCLK
SIM1_CARD_SIO
SIM1_CARD_SRST
SIM2_CARD_SCLK
SIM2_CARD_SIO
SIM2_CARD_SRST
AU_SPKP
AU_SPKN
AU_HSP
AU_HSN
AU_HPL
AU_HPR
RS20
RS21
RS22
R_LED
G_LED
B_LED
KEYPAD_LED-
CS37
LS21
VPROC_PMU
VPROC_FB
GND_VPROC_FB
LS20
VSYS_PMU
CS38
CS41
VA_PMU
VCN28_PMU
VTCXO_PMU
VCAMA_PMU
VCN33_PMU
VRTC
CS40
VM_PMU
VIO18_PMU
VIO18_PMU
VIO28_PMU
VCN18_PMU
VCAMD_PMU
VCAMD_IO_PMU
VEMC_3V3_PMU
VMC_PMU
VMCH_PMU
VUSB_PMU
VSIM1_PMU
VSIM2_PMU
VGF1_PMU
VIBR_PMU
VCAM_AF
CS39
RTC32K_CK
XS20
CS42
CS43
RS23
PMU_32K
VM_PMU
VEMC_3V3_PMU
CS48
CS45
VRTC
RS24
CS46
CS44

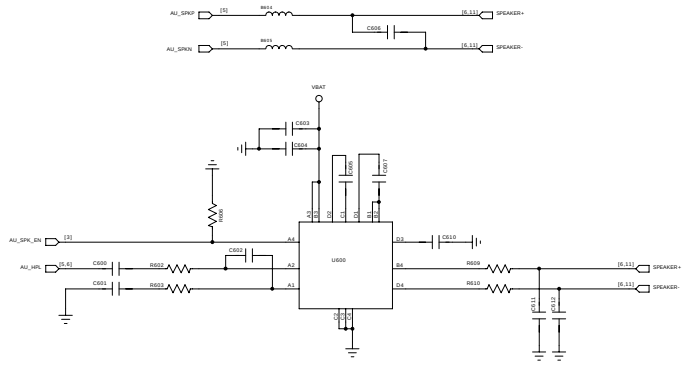
AU_SPKP
AU_SPKN
R604
R605
C606
SPEAKER+
SPEAKER-
VBAT
C603
C604
C605
C607
R606
AU_SPK_EN
AU_HPL
C600
C601
R602
R603
C602
U600
A4
A2
A1
B4
C4
D3
C1
D1
B1
D4
C2
D2
C3
B2
C610
R609
R610
C611
C612

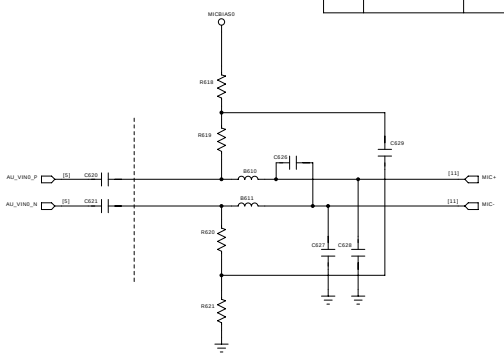
MICBIAS0
R618
R619
C629
C626
R610
R611
AU_VIN0_P
AU_VIN0_N
C620
C621
MIC+
MIC-
R620
R621
C627
C628

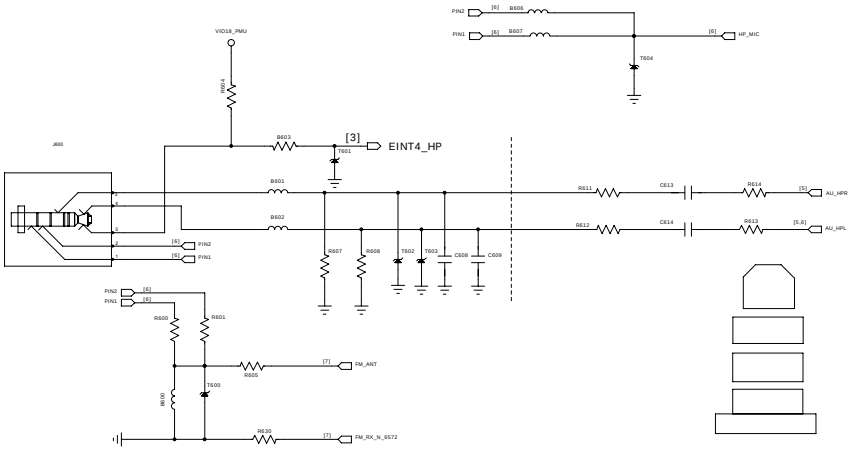
PIN2
PIN1
R606
R607
HP_MIC
T604
VIO18_PMU
R604
J600
R603
T601
EINT4_HP
R601
R602
R611
R612
C613
C614
R614
R613
AU_HPR
AU_HPL
R607
R608
T602
T603
C608
C609
R600
R601
R605
FM_ANT
T600
R630
FM_RX_N_6572

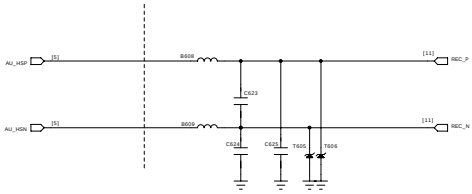
AU_HSP
AU_HSN
R608
R609
C623
C624
C625
T605
T606
REC_P
REC_N

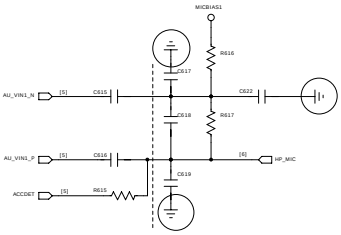
MICBIAS1
R616
C617
C618
R617
AU_VIN1_N
AU_VIN1_P
ACCDET
C615
C616
C622
C619
R615
HP_MIC

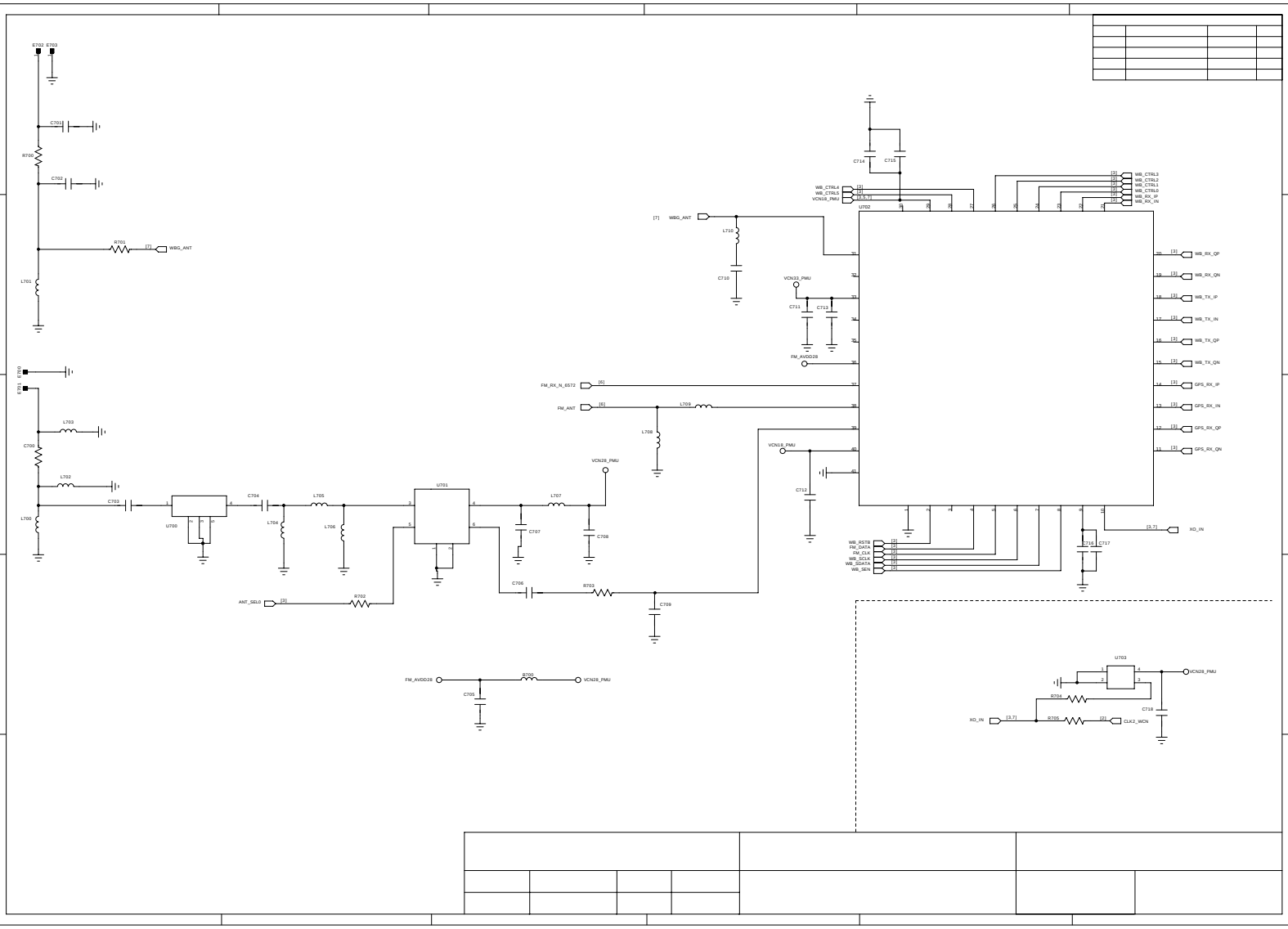
E702 E703
C701
R700
C702
R701
[7]
WBG_ANT
L701
E701 E700
L703
C700
L702
C703
L700
U700
C704
L704
L705
L706
U701
C707
L707
VCN28_PMU
C708
C706
R703
C709
ANT_SELO
[3]
R702
FM_AVDD28
R700
VCN28_PMU
C705
C714
C715
WB_CTRL4
WB_CTRL5
VCN18_PMU
[3]
[3]
[3,7]
U702
WB_CTRL3
WB_CTRL2
WB_CTRL1
WB_CTRL0
WB_RX_IP
WB_RX_IN
[7]
WBG_ANT
L710
C710
VCN33_PMU
C711
C713
FM_AVDD28
FM_RX_N_6572
[6]
FM_ANT
[6]
L709
L708
VCN18_PMU
C712
WB_RX_QP
WB_RX_QN
WB_TX_IP
WB_TX_IN
WB_TX_QP
WB_TX_QN
GPS_RX_IP
GPS_RX_IN
GPS_RX_QP
GPS_RX_QN
[3,7]
XO_IN
C716
C717
WB_DST2
FM_DATA
FM_CLK
WB_SCLK
WB_SDATA
WB_SEN
U703
VCN28_PMU
R704
C718
XO_IN
[3,7]
R705
[2]
CLK2_WCN

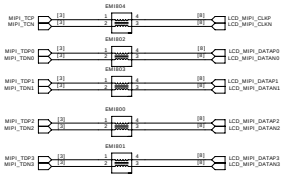
EMI804
MIPI_TD2
MIPI_TCN
LCD_MIPI_CLKP
LCD_MIPI_CLKN
EMI802
MIPI_TDF3
MIPI_TDN0
LCD_MIPI_DATAP0
LCD_MIPI_DATAN0
EMI803
MIPI_TDF1
MIPI_TDN1
LCD_MIPI_DATAP1
LCD_MIPI_DATAN1
EMI800
MIPI_TDF2
MIPI_TDN2
LCD_MIPI_DATAP2
LCD_MIPI_DATAN2
EMI801
MIPI_TDF3
MIPI_TDN3
LCD_MIPI_DATAP3
LCD_MIPI_DATAN3

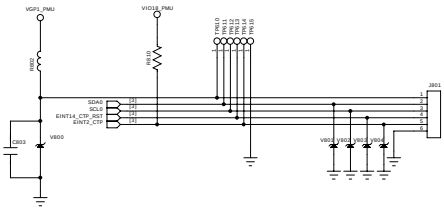
VGP1_PMU
VIO18_PMU
R800
R801
PM0.0
PM0.1
PM0.2
PM0.3
PM0.4
PM0.5
SDA0
SCL0
EINT14_CTP_RST
EINT2_CTP
C803
V800
J801
V802
V803
V804
V805

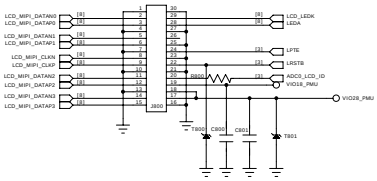
LCD_MIPI_DATAN0
LCD_MIPI_DATAP0
LCD_MIPI_DATAN1
LCD_MIPI_DATAP1
LCD_MIPI_CLKN
LCD_MIPI_CLKP
LCD_MIPI_DATAN3
LCD_MIPI_DATAP3
LCD_MIPI_DATAN2
LCD_MIPI_DATAP2
J800
LCD_LEDK
LEDA
LPTE
LRSTB
ADC3_LCD_ID
VIO18_PMU
R800
T800
C800
C801
T801
VIO28_PMU

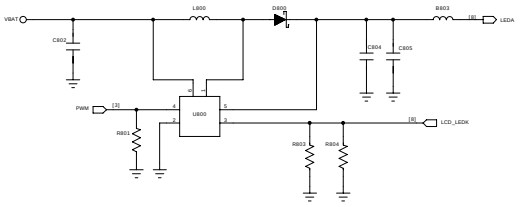
VBAT
C802
L800
D800
R803
LEDA
C804
C805
PWM
R801
U800
R802
R804
LCD_LEDK

VIO18_PMU

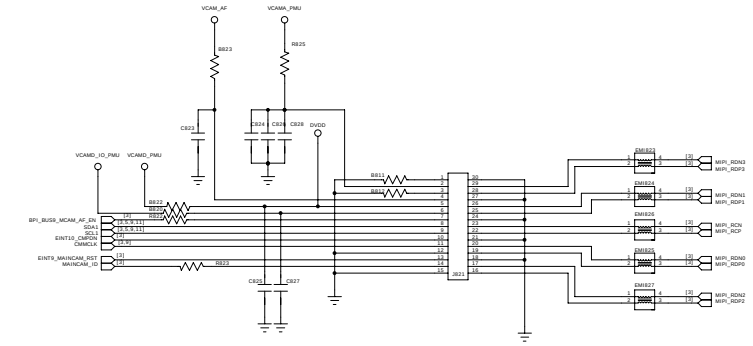
VCAM_AF
VCAMA_PMU
R823
R825
C823
C824
C826
C828
DVDD
VCAMD_IO_PMU
VCAMD_PMU
R811
R814
R822
R820
R821
BPI_BUSY_MCAM_AF_EN
SDA1
SCL1
EINT10_CMPDN
CMMCLK
EINT9_MAINCAM_RST
MAINCAM_IN
C825
C827
J821
EMI823
EMI824
EMI826
EMI825
EMI827
MIPI_RDN3
MIPI_RDP3
MIPI_RDN1
MIPI_RDP1
MIPI_RCN
MIPI_RCP
MIPI_RDN0
MIPI_RDP0
MIPI_RDN2
MIPI_RDP2

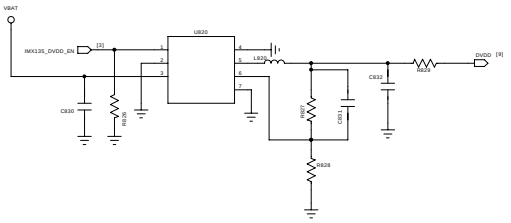
VBAT
IMX135_DVDD_EN
U820
L820
R829
DVDD
C832
C830
R830
R831
C831
R828

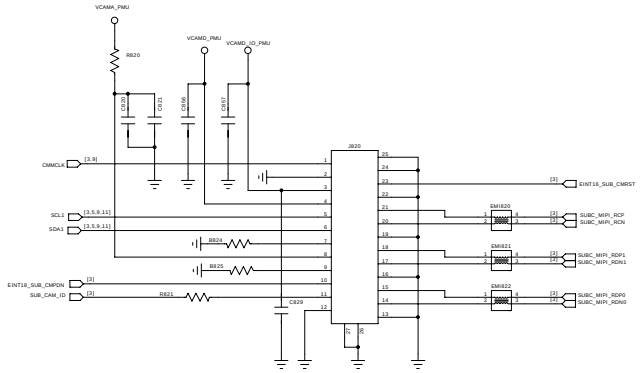
VCAMA_PMU
R820
VCAMD_PMU
VCAMD_IO_PMU
C816
C813
C816
C817
CMMCLK
SCL1
SDA1
EINT18_SUB_CMPDN
SUB_CAM_ID
R824
R825
R821
C829
J820
EINT16_SUB_CMRST
EMI820
EMI821
EMI822
SUBC_MIPI_RCP
SUBC_MIPI_RCN
SUBC_MIPI_RDP1
SUBC_MIPI_RDN1
SUBC_MIPI_RDP0
SUBC_MIPI_RDN0

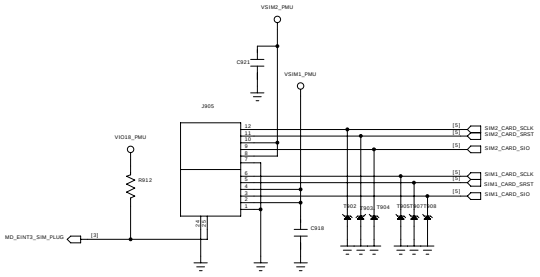
VSIM2_PMU
C921
VSIM1_PMU
J905
VIO18_PMU
R912
MD_EINT3_SIM_PLUG
[3]
C918
T902
T903
T904
T907
T908
[5]
SIM2_CARD_SCLK
SIM2_CARD_SRST
SIM2_CARD_SIO
SIM1_CARD_SCLK
SIM1_CARD_SRST
SIM1_CARD_SIO

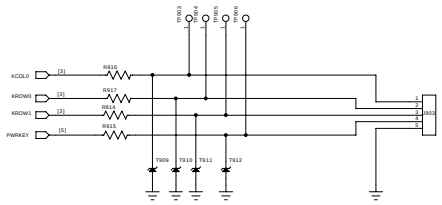
T903
T904
T905
T906
KCOL0
KROW0
KROW1
PWRKEY
[3]
[5]
R916
R917
R918
R915
T909
T910
T911
T912
J903

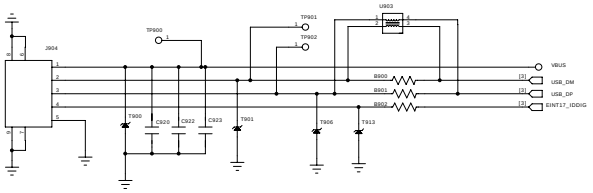
J904
TP900
TP901
TP902
U900
R800
R801
R802
VBUS
USB_DM
USB_DP
EINT17_IDDIG
[3]
T900
C920
C922
C923
T901
T906
T913

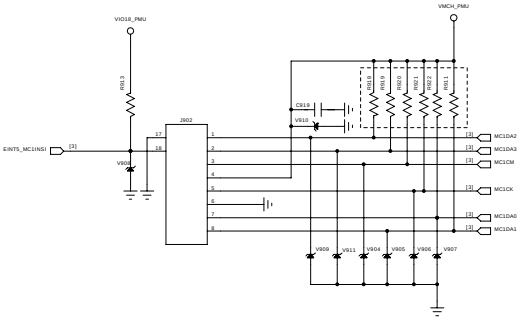
VMCH_PMU
VIO18_PMU
R913
EINT5_MC1INSI
[3]
V908
J902
C919
V910
R919
R920
R921
R922
R911
MC1DA2
MC1DA3
MC1CM
MC1CK
MC1DA0
MC1DA1
V909
V913
V904
V905
V906
V907

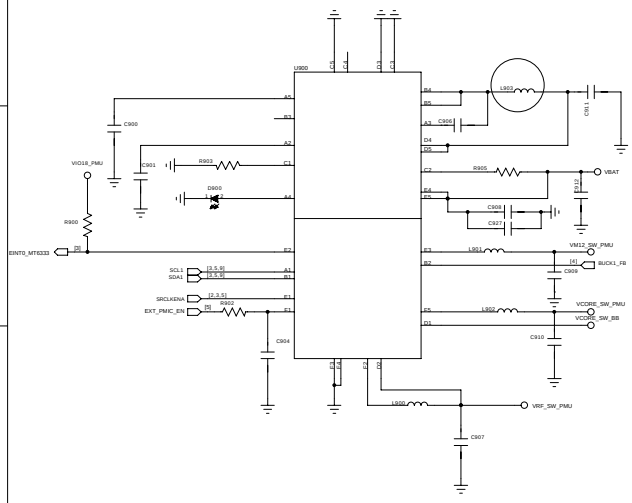
U900
VIO18_PMU
C900
C901
R903
D900
R900
EINT0_MT6333
[5]
SCL1
SDA1
[3,5,9]
SRCLKENA
EXT_PMIC_EN
[2,3,5]
R902
C904
L903
C906
C911
R905
VBAT
C912
C908
C927
L901
VM12_SW_PMU
[4]
BUCK1_FB
C909
L902
VCORE_SW_PMU
VCORE_SW_BB
C910
L900
VRF_SW_PMU
C907

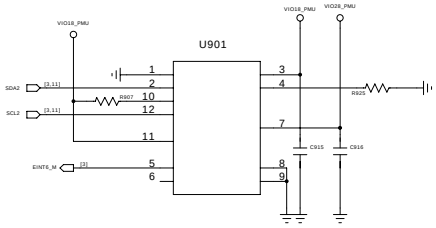
VIO18_PMU
VIO28_PMU
U901
SDA2
[3,11]
SCL2
EINT6_W
[3]
R907
R925
C915
C916

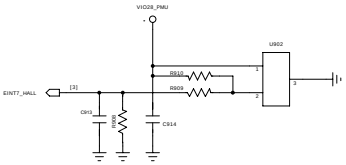
VIO28_PMU
U902
EINT7_HALL
[3]
R910
R909
C913
C914

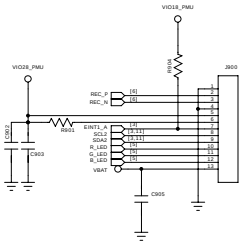
VIO18_PMU
VIO28_PMU
R904
J900
REC_P
REC_N
[6]
C902
R901
C903
EINT1_A
SCL2
SDA2
R_LED
G_LED
B_LED
VBAT
[3]
[3,11]
[5]
C905

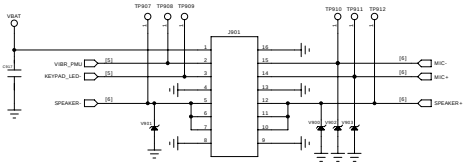
VBAT
C917
TP907
TP908
TP909
TP910
TP911
TP912
J901
VIBR_PMU
KEYPAD_LED-
SPEAKER-
[5]
[6]
MIC-
MIC+
SPEAKER+
VR01
VR02
VR03
VR04