Sheet #	Content	Sheet #	Content

Title	<Title>
Size: D	Document Number: <Doc>
Rev	<RevCode>
Date:	Tuesday, May 12, 2020
Sheet	1 of 43

Revision History

REV	DESCRIPTION
A	

Title	<Title>	
Size: D	Document Number: <Doc>	Rev: <RevCode>
Date: Tuesday, May 12, 2020	Sheet 3 of 43	

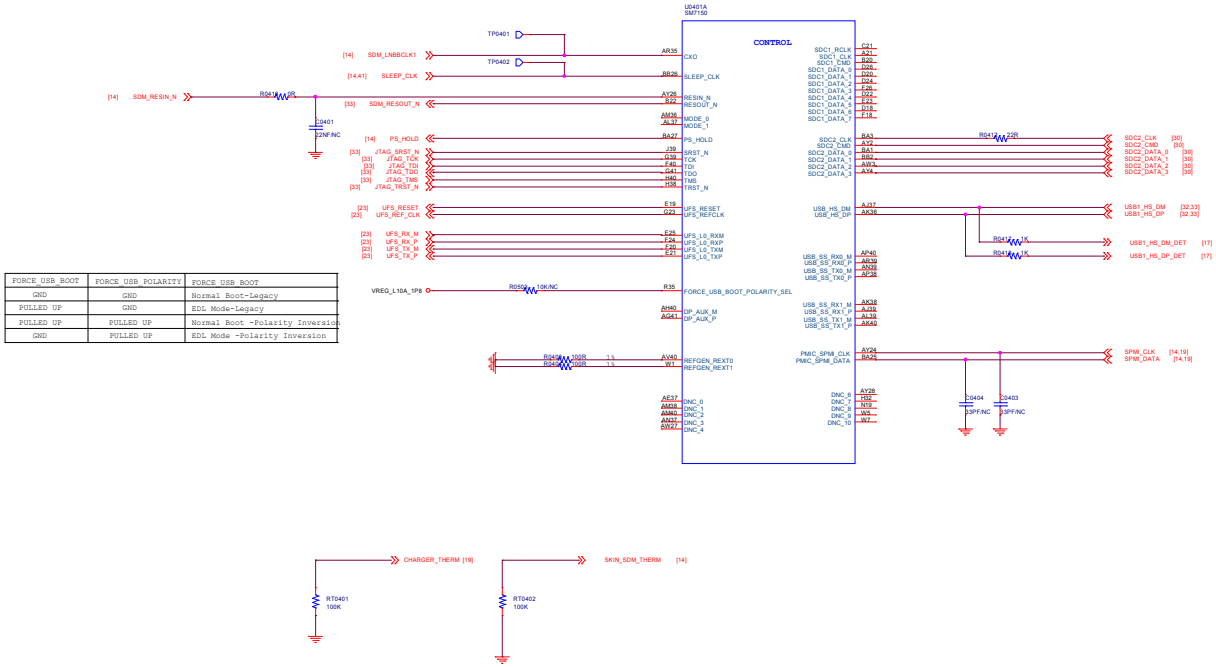

FORCE_USB_BOOT	FORCE_USB_POLARITY	FORCE_USB_BOOT
GND	GND	Normal Boot-Legacy
PULLED_UP	GND	EDL Mode-Legacy
PULLED_UP	PULLED_UP	Normal Boot -Polarity Inversion
GND	PULLED_UP	EDL Mode -Polarity Inversion

SM7150 CONTROL

File	<Title>		
Size: D	Document Number: <Doc>		Rev: <RevCode>
Date: Tuesday, May 12, 2020	Sheet 4 of 43		

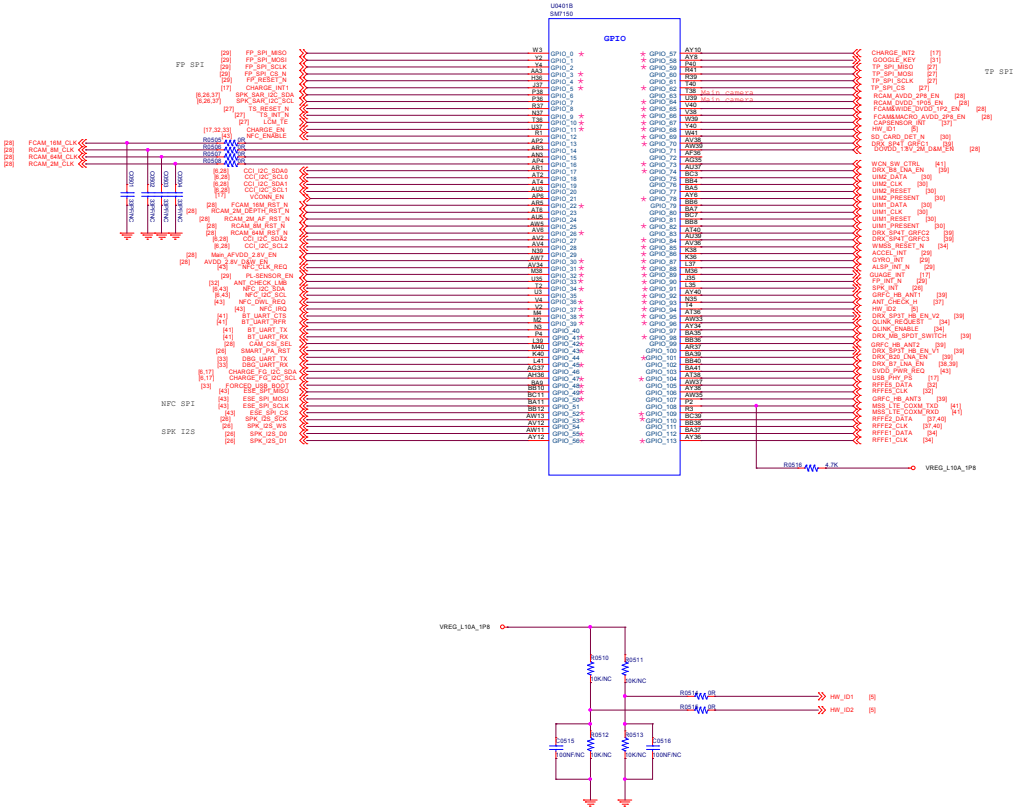

SM7150 LPI GPIO

Title	<Title>		
Size: D	Document Number: <Doc>		Rev: <RevCode>
Date: Tuesday, May 12, 2020	Sheet 5 of 43		

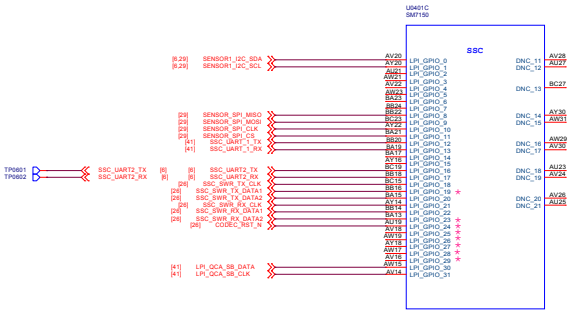

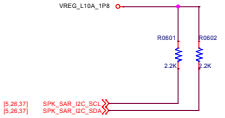

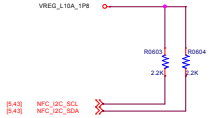

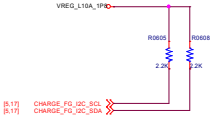

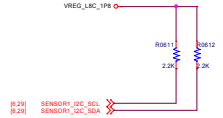

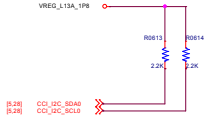

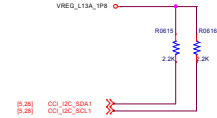

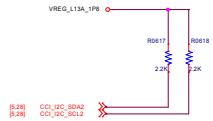

Title	<Title>	
Size: D	Document Number: <Doc>	Rev: <RevCode>
Date: Tuesday, May 12, 2020	Sheet 6 of 43	

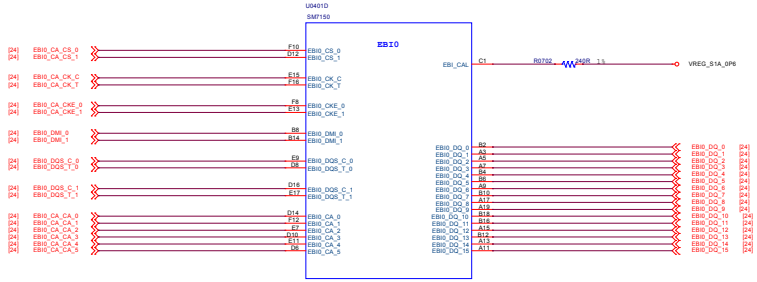

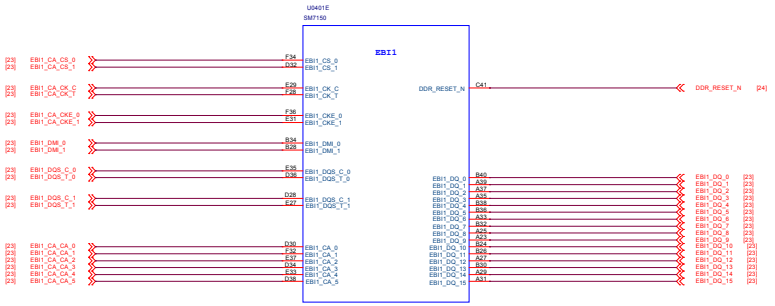

Title	<Title>	
Size D	Document Number <Doc>	Rev <RevCode>
Date: Tuesday, May 12, 2020	Sheet 7 of 43	

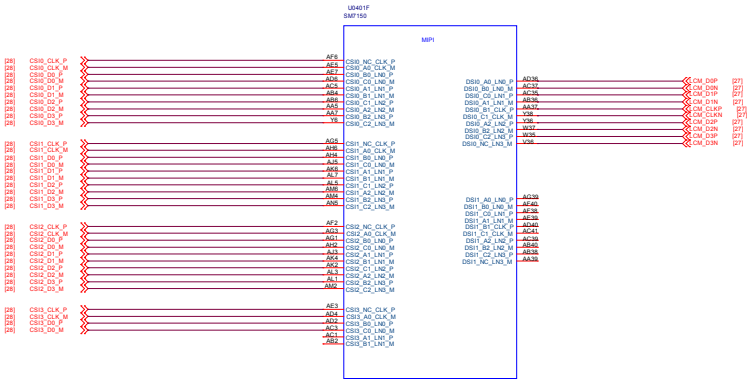

SDM670 MIPI

Title	<Title>	
Size: D	Document Number: <Doc>	Rev: <RevCode>
Date: Tuesday, May 12, 2020	Sheet 8 of 43	

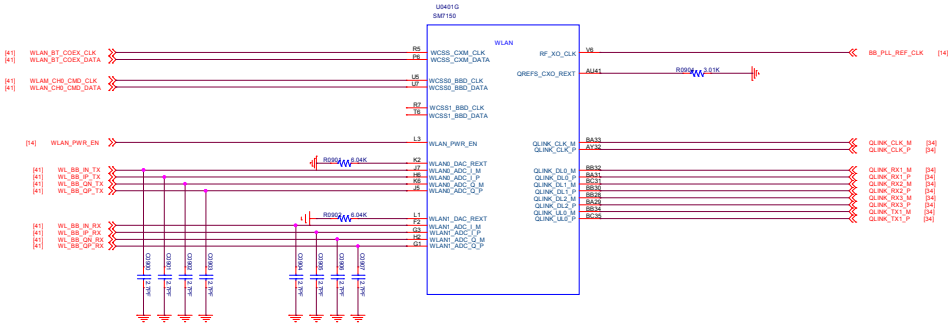

File	<Title>	
Size: D	Document Number: <Doc>	Rev: <RevCode>
Date: Tuesday, May 12, 2020	Sheet 9 of 43	

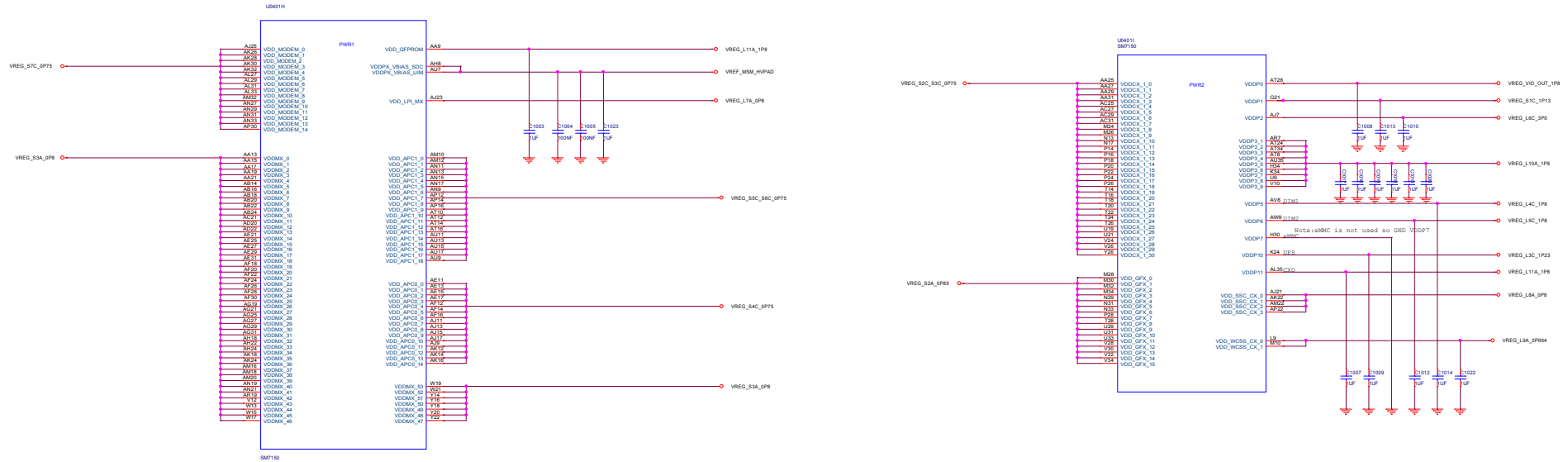

Title	<Title>		
Size: D	Document Number: <Doc>		Rev: <RevCode>
Date: Tuesday, May 12, 2020	Sheet 10 of 43		

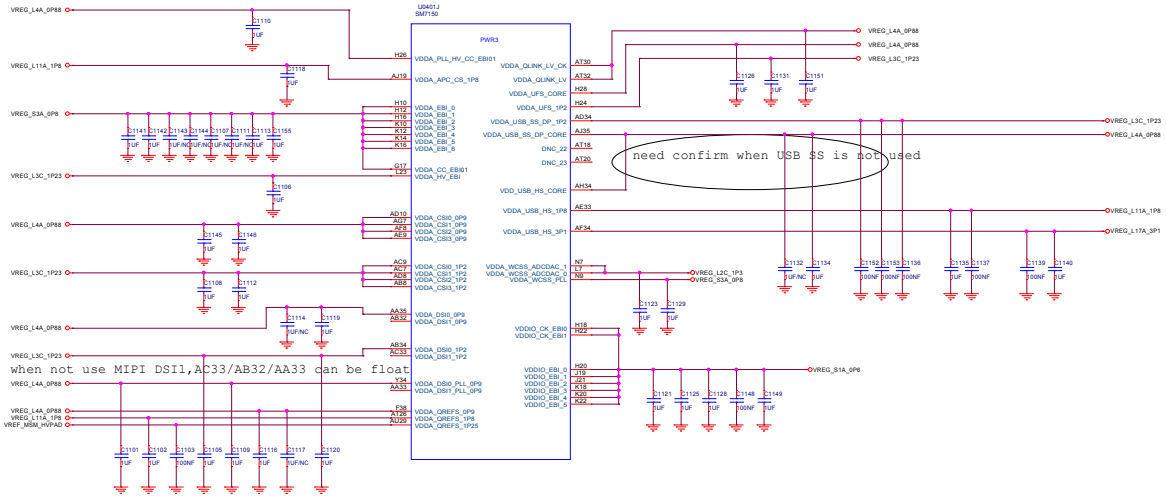

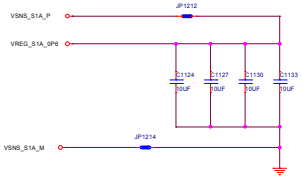

Title	<Title>		
Size: D	Document Number: <Doc>		Rev: <RevCode>
Date: Tuesday, May 12, 2020	Sheet 11 of 43		

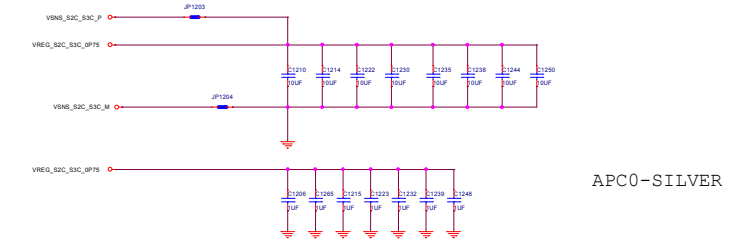

APC0-SILVER

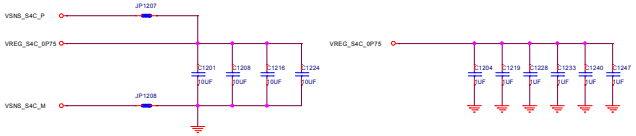

APC1-GOLD

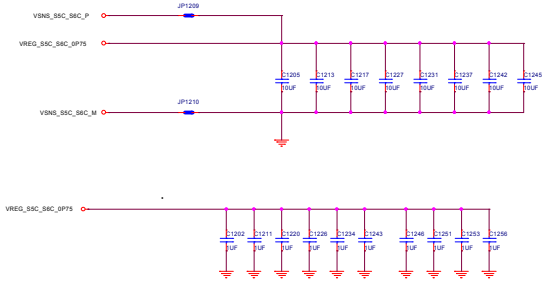

MODEM

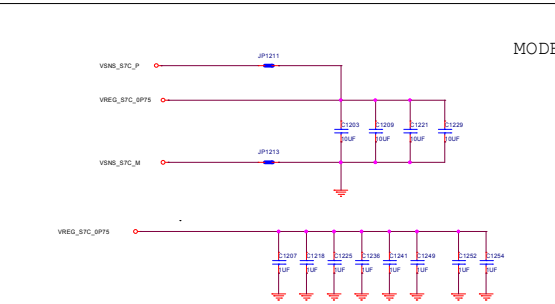

GFX

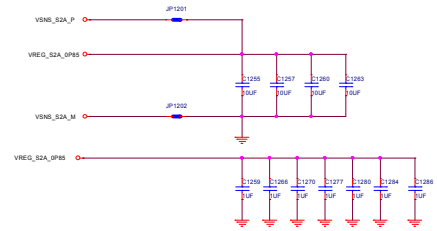

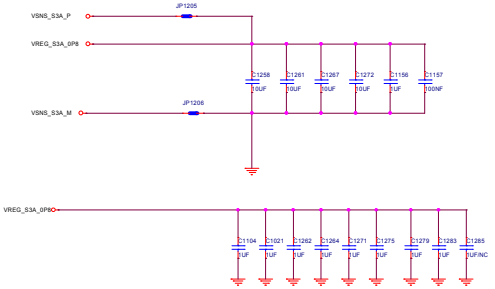

LPI-CX

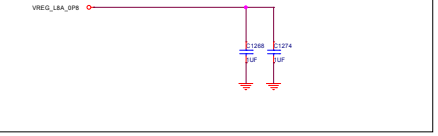

LPI-MX

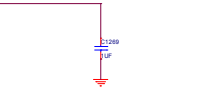

WCSS

Title	<Title>	
Size: D	Document Number: <Doc>	Rev: <RevCode>
Date: Tuesday, May 12, 2020	Sheet 12 of 43	

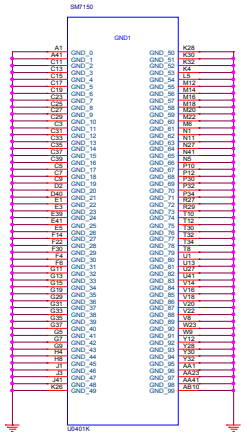

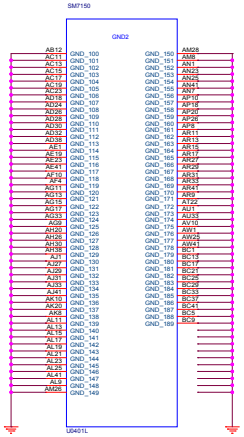

Title	<Title>	
Size: D	Document Number: <Doc>	Rev: <RevCode>
Date: Tuesday, May 12, 2020	Sheet 13 of 43	

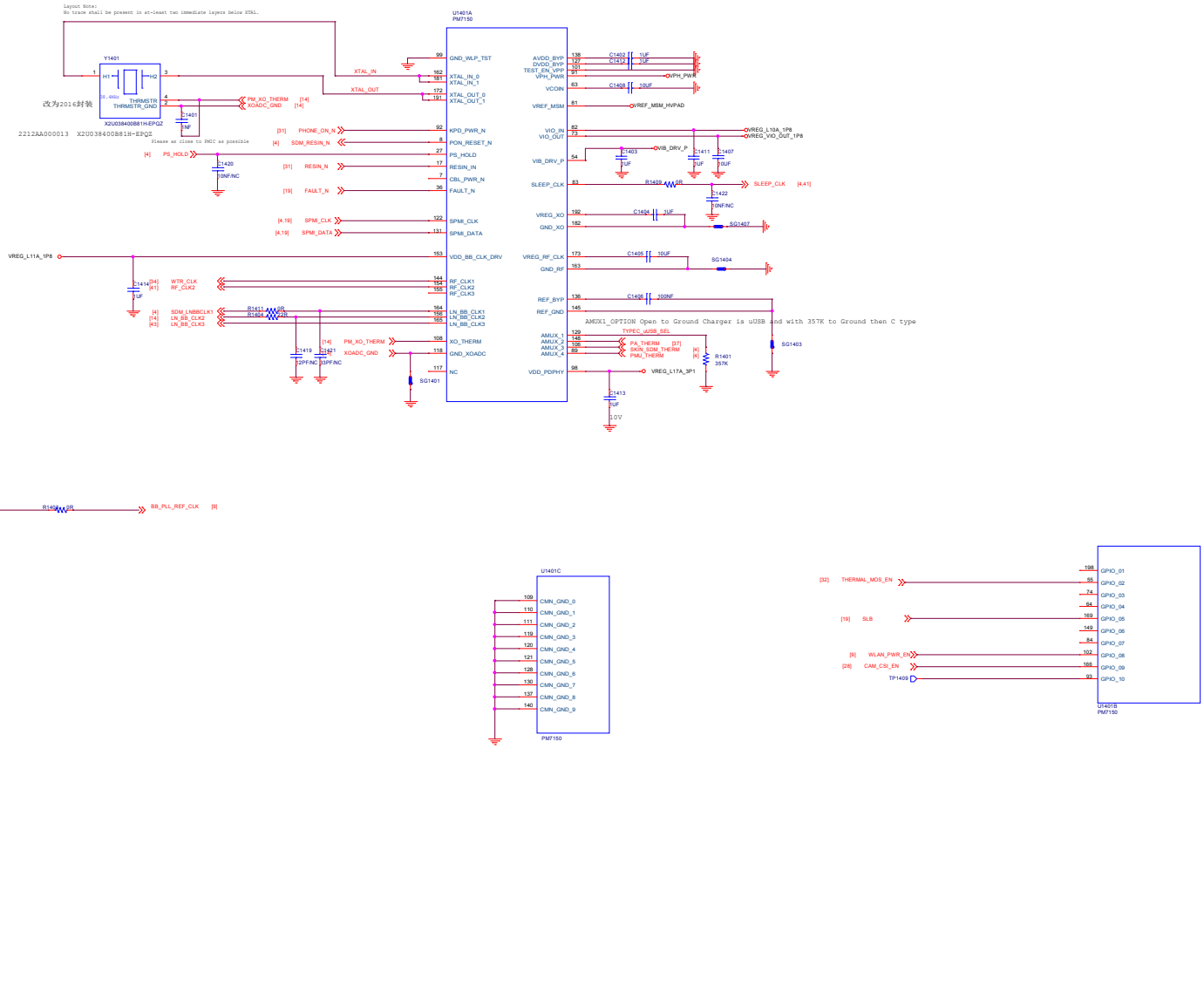
Layout Note:
No trace shall be present in at-least two immediate layers below XTAL.
U1401A
PM7150
Y1401
H1
H2
THRMSTR
THRMSTR_GND
X2U038400B81H-EPQZ
改为2016封装
2212AA000013 X2U038400B81H-EPQZ
Please as close to PMIC as possible
C1401
1NF
C1420
10NF/NC
XTAL_IN
XTAL_OUT
PM_XO_THERM
XOADC_GND
PHONE_ON_N
SDM_RESIN_N
PS_HOLD
RESIN_N
FAULT_N
SPMI_CLK
SPMI_DATA
VREG_L11A_1P8
C1414
1UF
WTR_CLK
RF_CLK2
R1411
R1464
49R
42R
SDM_LN8BCLK1
LN_BB_CLK2
LN_BB_CLK3
C1419
C1421
10PF/NC
33PF/NC
SG1401
GND_WLP_TST
XTAL_IN_0
XTAL_IN_1
XTAL_OUT_0
XTAL_OUT_1
KPD_PWR_N
PON_RESET_N
PS_HOLD
RESIN_IN
CBL_PWR_N
FAULT_N
SPMI_CLK
SPMI_DATA
VDD_BB_CLK_DRV
RF_CLK1
RF_CLK2
RF_CLK3
LN_BB_CLK1
LN_BB_CLK2
LN_BB_CLK3
XO_THERM
GND_XOADC
NC
AVDD_BYP
DVDD_BYP
TEST_EN_VPP
VPH_PWR
VCOIN
VREF_MSM
VIO_IN
VIO_OUT
VIB_DRV_P
SLEEP_CLK
VREG_XO
GND_XO
VREG_RF_CLK
GND_RF
REF_BYP
REF_GND
AMUX_1
AMUX_2
AMUX_3
AMUX_4
VDD_PDPHY
C1402
C1412
1UF
C1408
10UF
VPH_PWR
VREF_MSM_HVPAD
VREG_L10A_1P8
VREG_VIO_OUT_1P8
C1403
C1411
C1407
VIB_DRV_P
R1408
0R
SLEEP_CLK
C1422
10NF/NC
C1404
SG1407
C1405
SG1404
C1406
100NF
TYPEC_uUSB_SEL
PA_THERM
SKIN_SDM_THERM
PMU_THERM
R1401
357K
SG1403
VREG_L17A_3P1
C1413
1UF
10V
AMUX1_OPTION Open to Ground Charger is uUSB and with 357K to Ground then C type
[14] LN_BB_CLK2
R1464 0R
BB_PLL_REF_CLK [9]
C1418
1PF/NC
U1401C
CMN_GND_0
CMN_GND_1
CMN_GND_2
CMN_GND_3
CMN_GND_4
CMN_GND_5
CMN_GND_6
CMN_GND_7
CMN_GND_8
CMN_GND_9
PM7150
[32] THERMAL_MOS_EN
[19] SLB
[9] WLAN_PWR_EN
[28] CAM_CSI_EN
TP1409
GPIO_01
GPIO_02
GPIO_03
GPIO_04
GPIO_05
GPIO_06
GPIO_07
GPIO_08
GPIO_09
GPIO_10
U1401B
PM7150
Title
<Title>
Size D
Document Number
<Doc>
Rev
<RevCode>
Date: Tuesday, May 12, 2020
Sheet 14 of 43

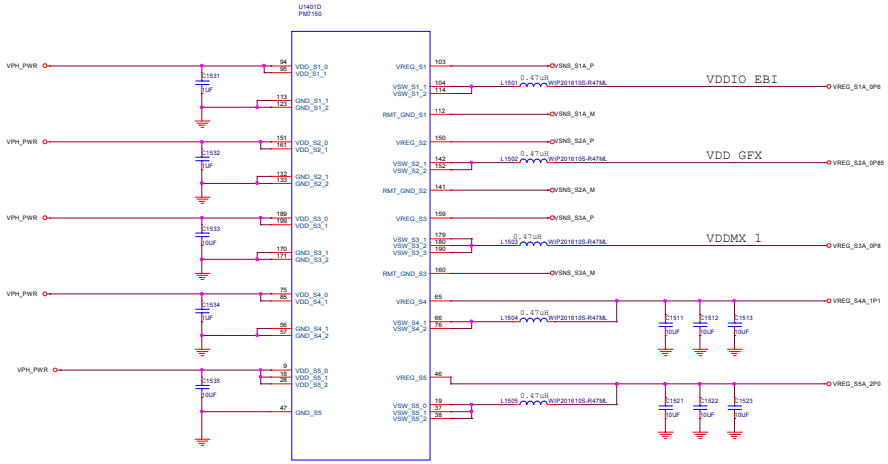

Title	<Title>		
Size: D	Document Number: <Doc>		Rev: <RevCode>
Date: Tuesday, May 12, 2020	Sheet 15 of 43		

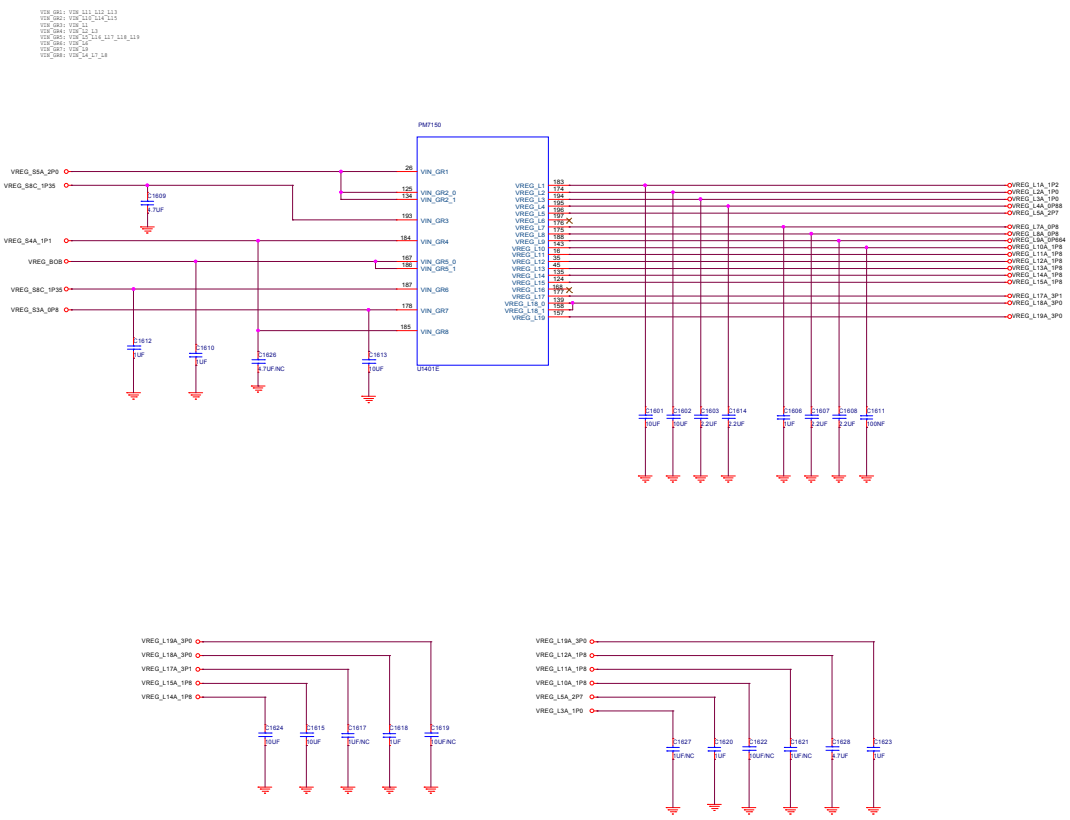

Title	<Title>	
Size: D	Document Number: <Doc>	Rev: <RevCode>
Date: Tuesday, May 12, 2020	Sheet 16 of 43	

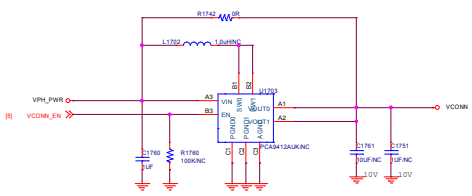

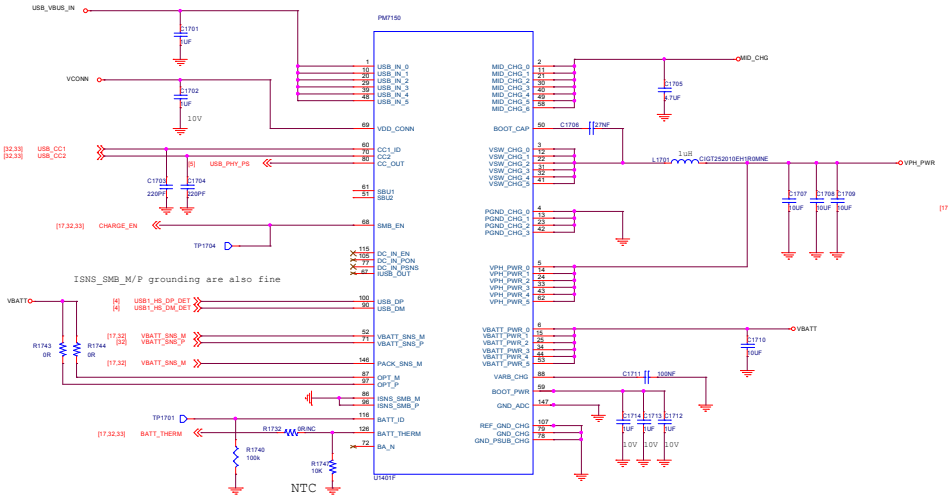

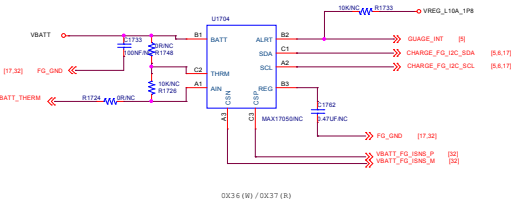

Note: Do not place any capacitance on BATT_THERM or BATT_ID nets.
Ensure battery packs also do not contain any capacitance

PM7150 (Qualcomm Battery Gauge)	unused pin state
VBATT_SNS_P	VBATT
VBATT_SNS_M	GND
ISNS_SMB_P/M	GND
PACK_SNS_M	GND
BATT_ID	NC or 100k pull-down
BATT_THERM	NC or 100k pull-down
OPT_P/M	VBATT
AMUX_1	Must be used(PON Option)

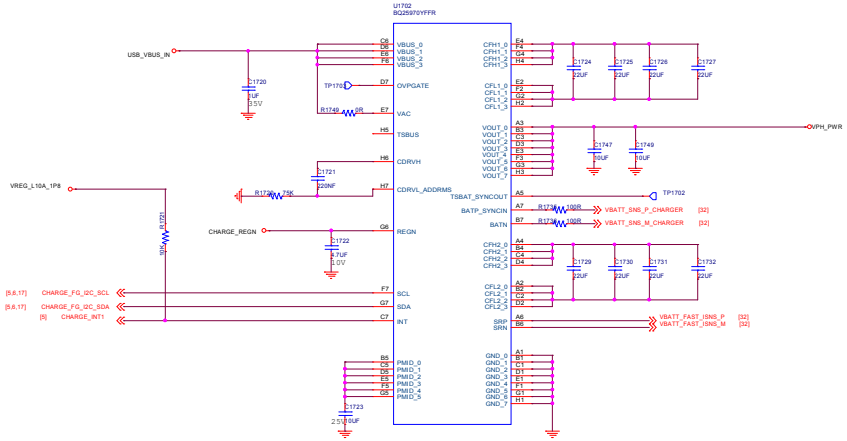

Resistor value to GND on CDRVL_ADDRMS	I2C ADDR	OPERATION
18KΩ	0X65	Master
39KΩ	0X66	Slave
75KΩ	0X65	Slandalone

Title	<Title>		
Size D	Document Number <Doc>		Rev <RevCode>
Date: Tuesday, May 12, 2020	Sheet 17 of 43		

PGND_WLED
Place Cout close to the PMIC. Dedicated trace from PGND to Cout
and three dedicated vias to main gnd plane at Cout.
GND_DISP
Place CIN next to COUT. Short, direct route from CIN to COUT ground on top layer.

GNDP_WLED_SINK
Dedicated via to main ground plane. Resistance from pin to ground <30mohm.
Do NOT connect to any other ground.

Route from VDISP_MID to Cmid and PGND_DISP to Cmid.
Dedicated vias from Cmid directly to the main gnd plane.

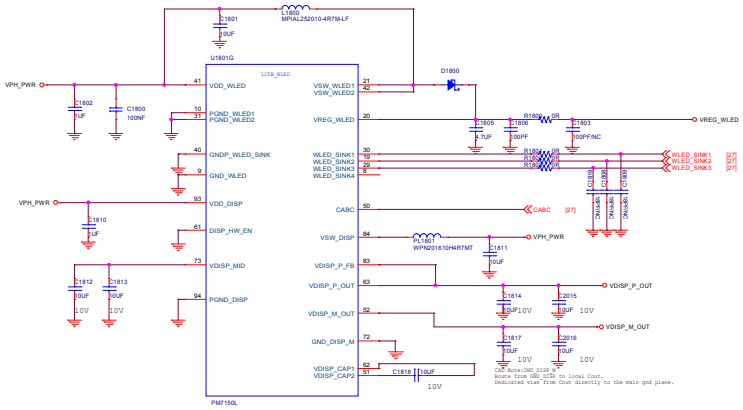

File	<Title>		
Size: D	Document Number <Doc>		Rev: <RevCode>
Date: Tuesday, May 12, 2020	Sheet 18 of 43		

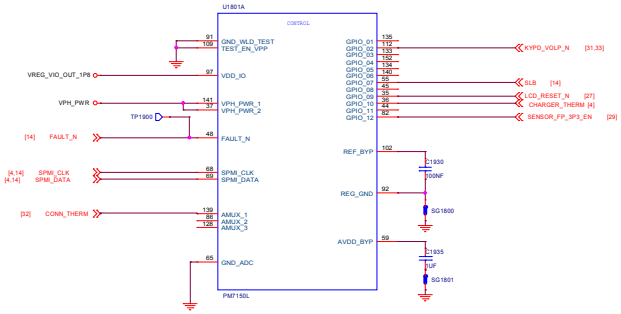

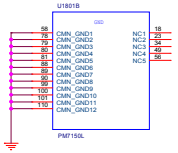

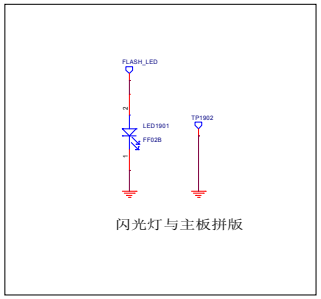

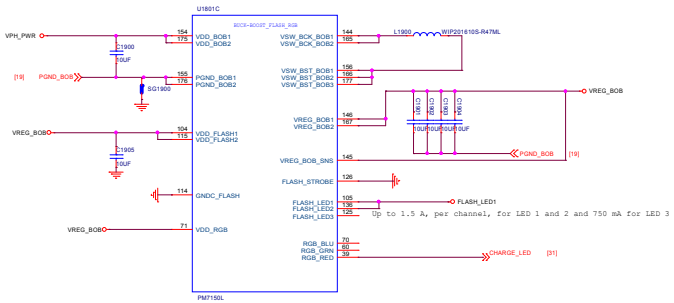

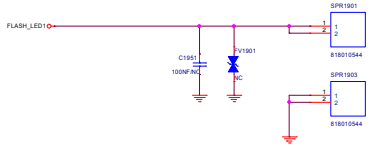

Title	<Title>		
Size: D	Document Number: <Doc>		Rev: <RevCode>
Date: Tuesday, May 12, 2020	Sheet 19 of 43		

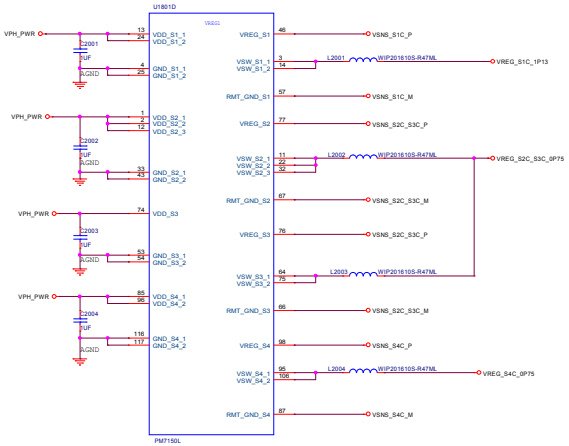

Title	<Title>	
Size: D	Document Number: <Doc>	Rev: <RevCode>
Date: Tuesday, May 12, 2020	Sheet 20 of 43	

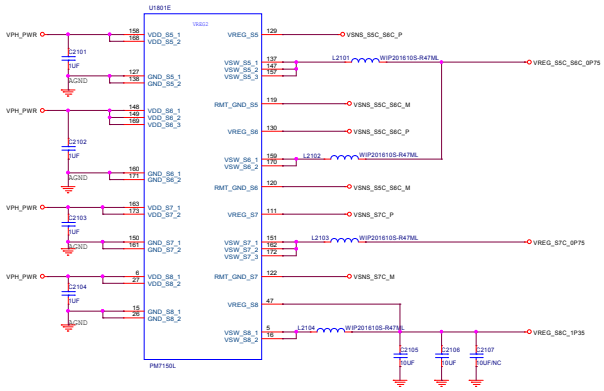

Title	<Title>	
Size: D	Document Number: <Doc>	Rev: <RevCode>
Date: Tuesday, May 12, 2020	Sheet 21 of 43	

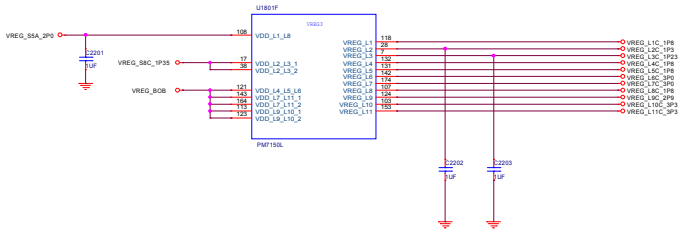

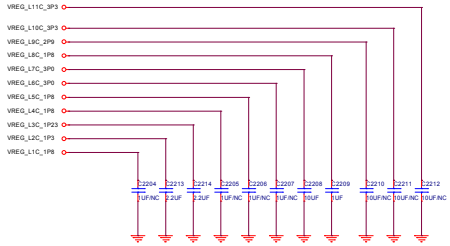

Title	<Title>	
Size: D	Document Number: <Doc>	Rev: <RevCode>
Date: Tuesday, May 12, 2020	Sheet 22 of 43	

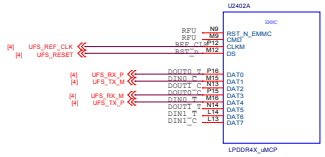

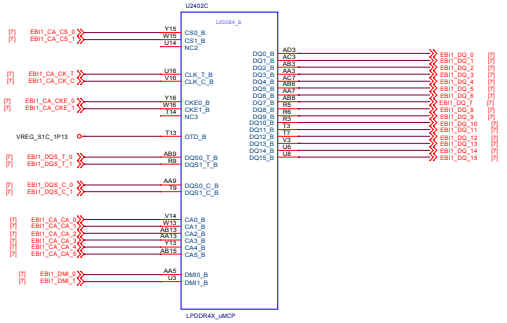

RESERVED

Title	<Title>		
Size D	Document Number <Doc>		Rev <RevCode>
Date: Tuesday, May 12, 2020	Sheet 23 of 43		

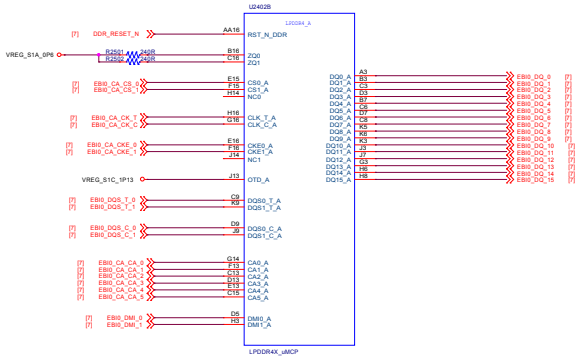

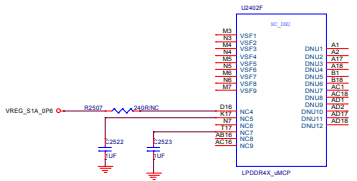

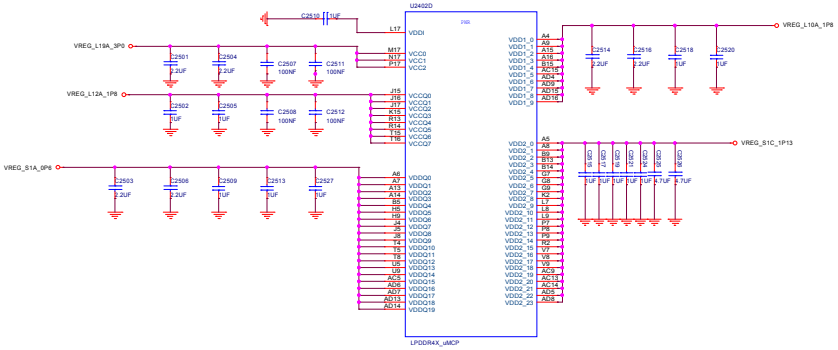

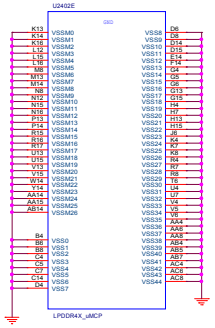

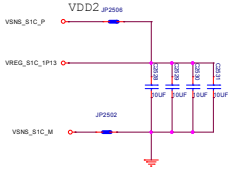

LPDDR4X

Title	<Title>		
Size: D	Document Number: <Doc>		Rev: <RevCode>
Date: Tuesday, May 12, 2020	Sheet 24 of 43		

AUDIO JACK(NO type)

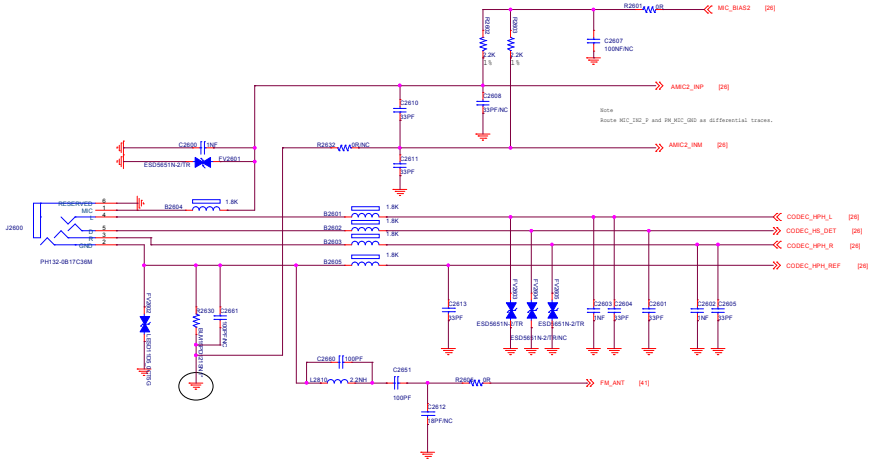

RECEIVER

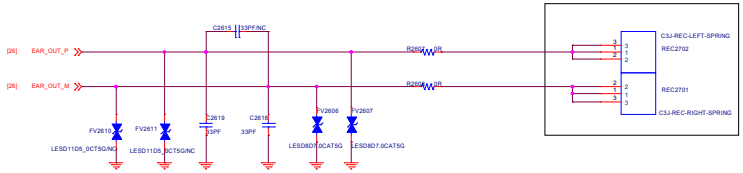

ANC MIC

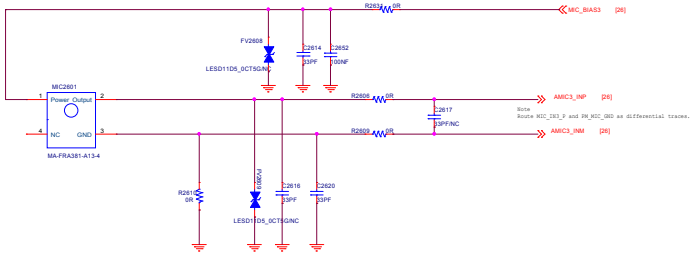

AUDIO PARTS

Title	<Title>		
Size: D	Document Number: <Doc>		Rev: <RevCode>
Date: Tuesday, May 12, 2020	Sheet 25 of 43		

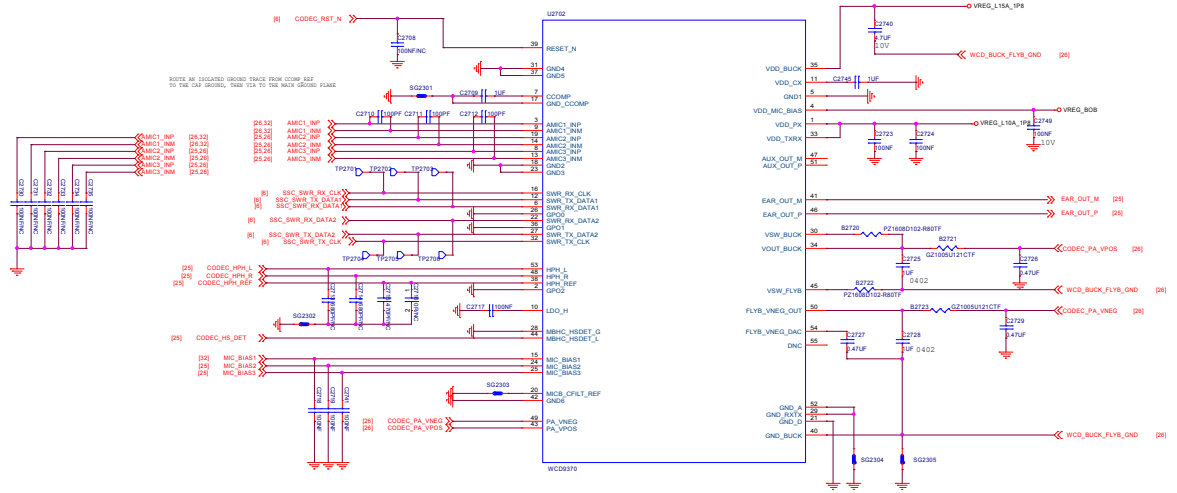

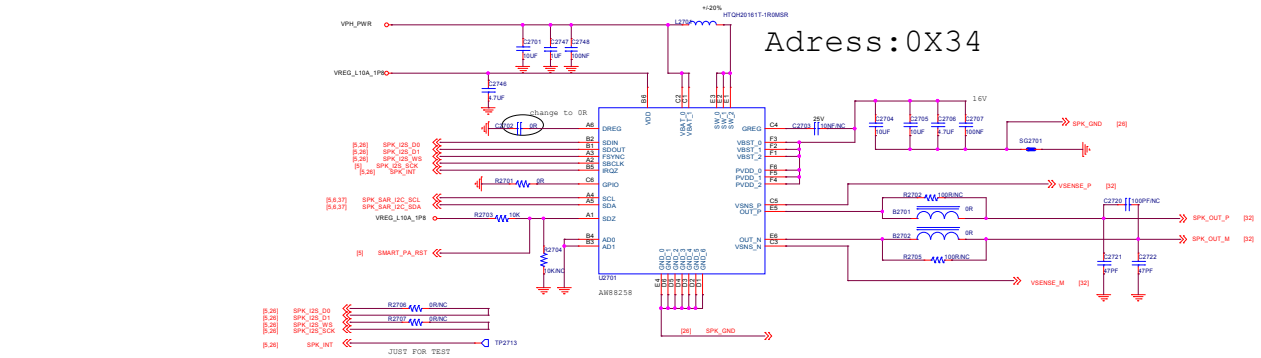

AD2	AD1	Address(7-bit)
0	0	0X34
0	1	0X35
1	0	0X36
1	1	0X37

File:	<Title>	
Size: D	Document Number: <Doc>	Rev: <RevCode>
Date: Tuesday, May 12, 2020	Sheet 28 of 43	

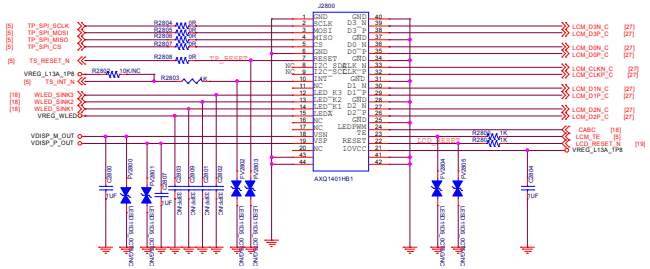

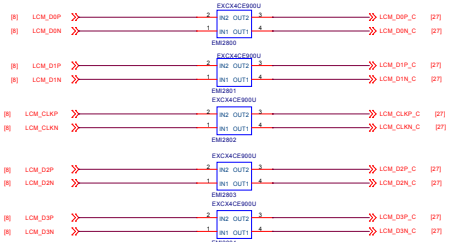

DISPLAY I/F

Title: <Title>		
Size: B	Document Number: <Doc>	Rev: <RevCode>
Date: Tuesday, May 12, 2020	Sheet 27 of 43	

Main Camera A

I2C adress IC: 0X5A(W)/0X5B(R)
I2C Driver IC: 0X18(W)/0X19(R)
I2C EEPROM: 0XB0(W)/0XB1(R)

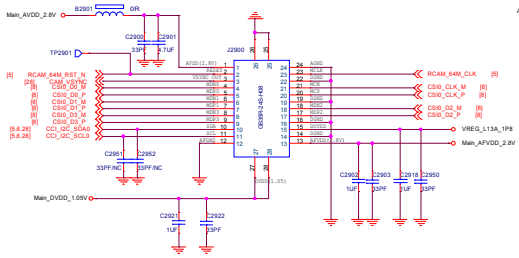

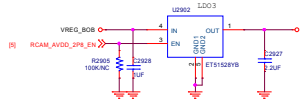

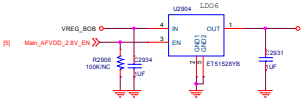

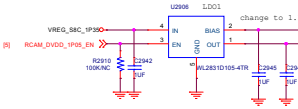

Main Camera B 2M depth

I2C adress IC:0X7A(W)/0X7B(R)
I2C Driver IC: NC
I2C EEPROM: NC

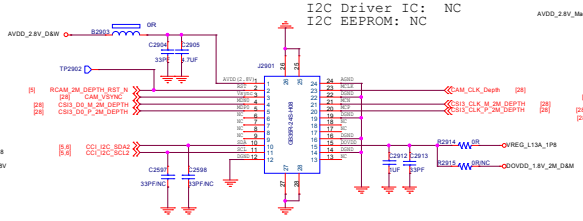

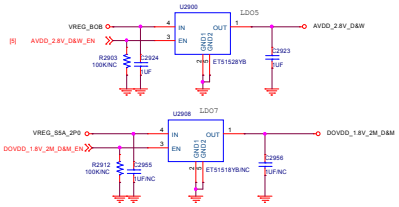

Main Camera C 2M AF Macro

I2C adress IC:0X78(W)/0X79(R)
I2C Driver IC: 0X18(W)/0X19(R)
I2C EEPROM: 0XA4(W)/0XA5(R)

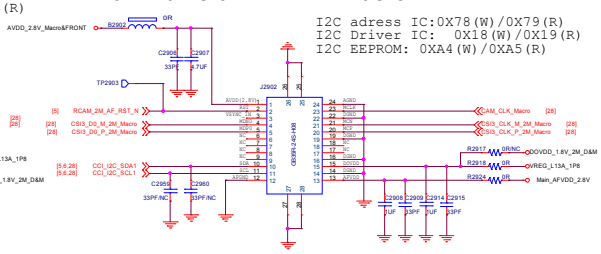

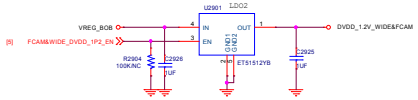

Main Camera B 8M Width

I2C adress IC:0X5A(W)/0X5B(R)
I2C Driver IC: NC
I2C EEPROM: NC

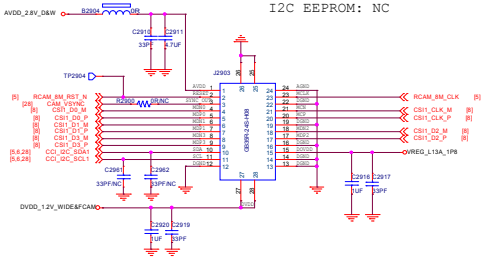

MIPI SW2

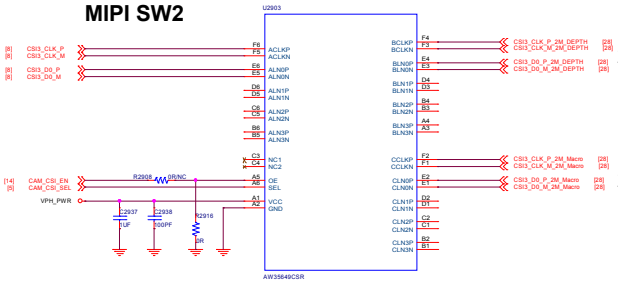

2M depth

2M Macro

FRONT CAMERA 1 (16M)

I2C adress IC:0X20(W)/0X21(R)
I2C Driver IC: NC
I2C EEPROM: 0XA2(W)/0XA3(R)

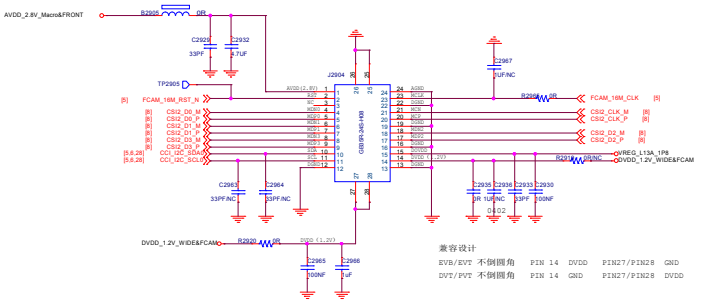

兼容设计

EVB/EVT 不倒圆角 PIN 14 DVDD PIN27/PIN28 GND
DVT/PVT 不倒圆角 PIN 14 GND PIN27/PIN28 DVDD

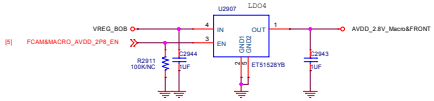

WL2820

		64M	2M Depth	2M Macro	8M	16M	Note
DVDD(1.05V)	LDO1	1	WL2831				
DVDD(1.2V)	LDO2				1	1	
AVDD1(2.8V)	LDO3	1					
AVDD2(2.8V)	LDO4			1		1	
AVDD3(2.8V)	LDO5		1		1		
AFVDD	LDO6	1		1			
DOVDD预留	LDO7		0(1)	0(1)			
DOVDD VREG_L13A_1P8		1	1	1	1	1	

Camera	I2C	MCLK	MIPI
Rear Main	I2C0	MCLK2	CSIPHY0
Front	I2C0	MCLK0	CSIPHY2
Depth	I2C2	MCLK3	CSIPHY3
Wide	I2C1	MCLK1	CSIPHY1
Macro	I2C1	MCLK3	CSIPHY3

Title	<Title>
Size D	Document Number <Doc> Rev <RevCode>
Date:	Tuesday, May 12, 2020 Sheet 28 of 43

A+GYRO

一供：ICM-40607　2592AA000024
二供：LSM6DS3TR-C　2592AA000002

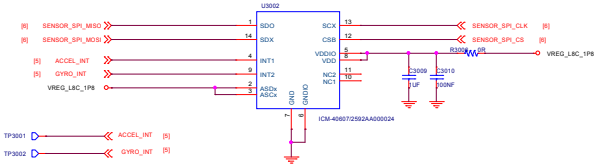

ALS/PROXIMITY SENSOR

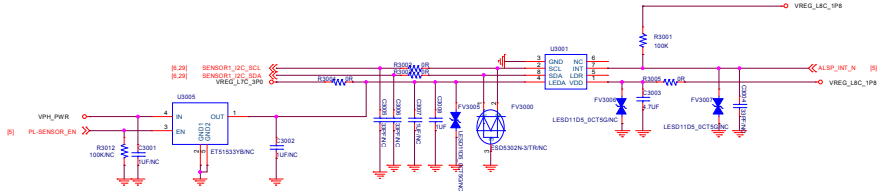

Magnetic Sensor

QMC6308　2591AA000068

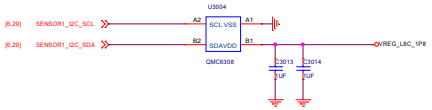

FP

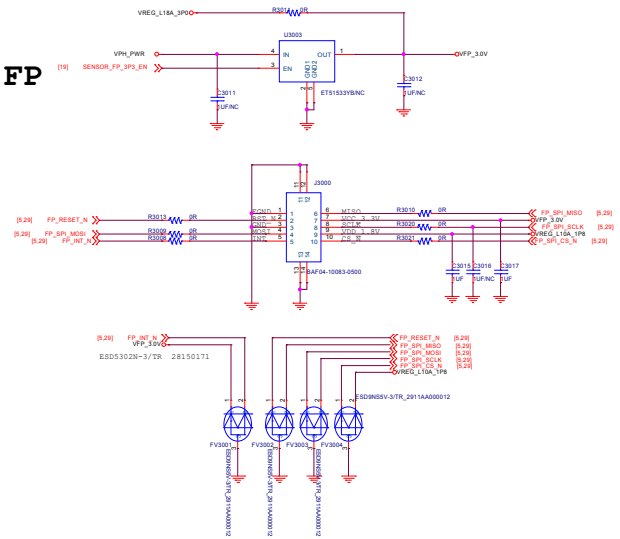

SENSOR

Title	<Title>		
Size: D	Document Number: <Doc>		Rev: <RevCode>
Date: Tuesday, May 12, 2020	Sheet 29 of 43		

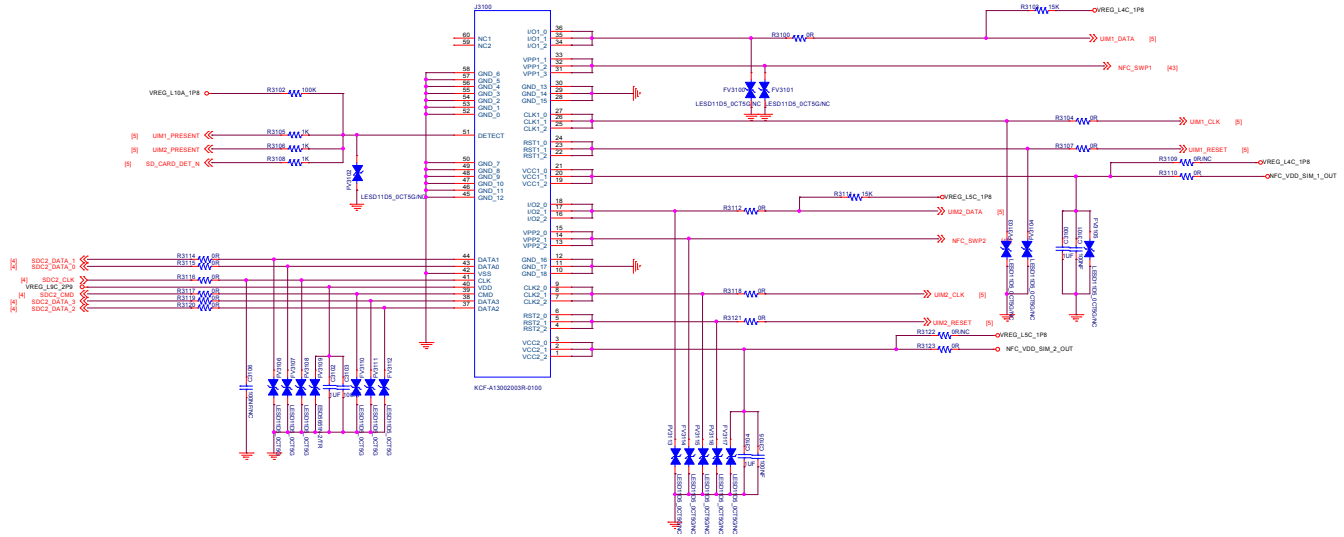

SIM/TF CARD

Title	<Title>	
Size D	Document Number <Doc>	Rev <RevCode>
Date: Tuesday, May 12, 2020	Sheet 30 of 43	

Side key

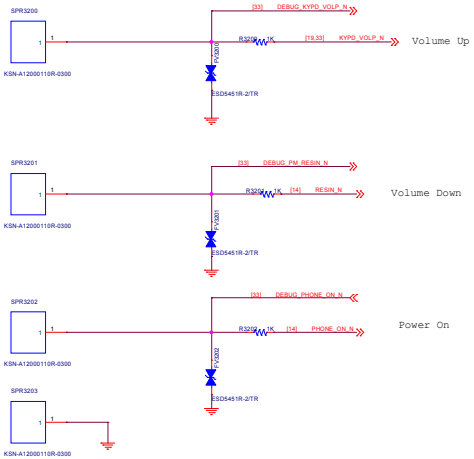

Google key

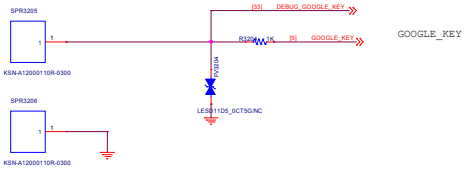

Charger indicator

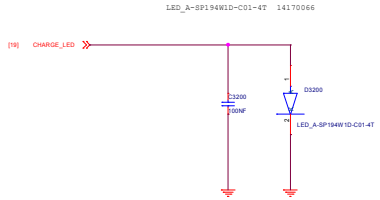

KEYPAD AND INDICATOR

File	<Title>		
Size: D	Document Number: <Doc>		Rev: <RevCode>
Date: Tuesday, May 12, 2020	Sheet 31 of 43		

Battery Connector

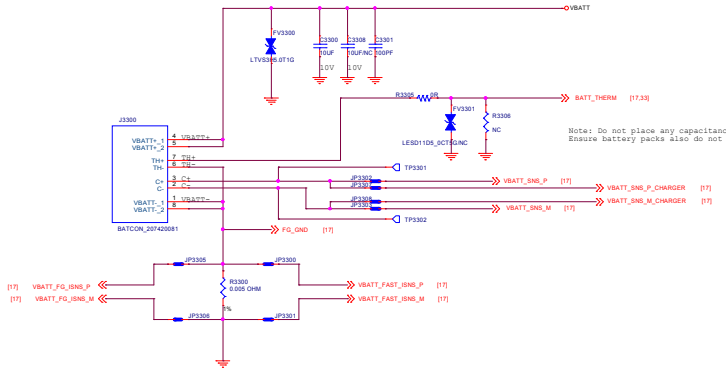

Note: Do not place any capacitance on BATT_THERM or BATT_ID nets.
Ensure battery packs also do not contain any capacitance

Sub Board Connector

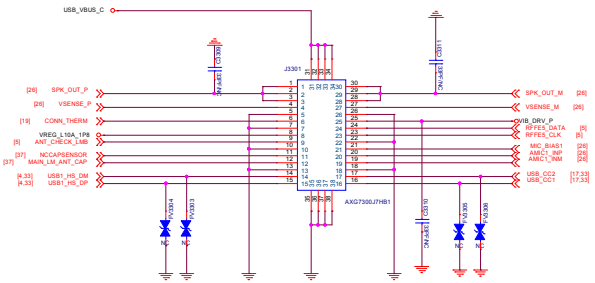

Ensure a flyback diode is connected across the Vibrator motor.

OVP

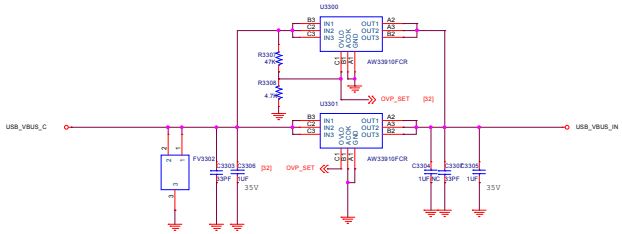

30W充电注意OVP阻抗

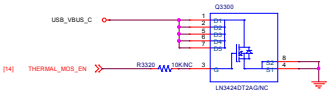

BAT/B2B CONNECTOR

Title: <Title>			
Size: D	Document Number: <Doc>		Rev: <RevCode>
Date: Tuesday, May 12, 2020	Sheet 32 of 43		

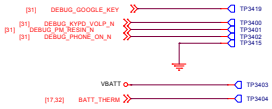

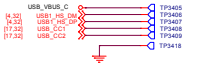

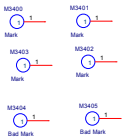

Marks point

屏蔽盖

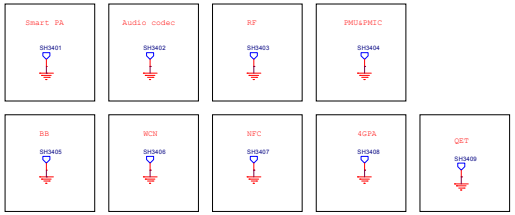

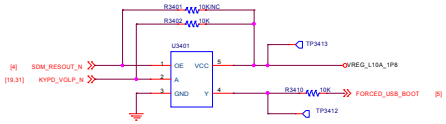

Power key+Vol up enter 9008 mode

INPUT		OUTPUT
OE	A	Y
L	H	L
L	L	H
H	X	Z

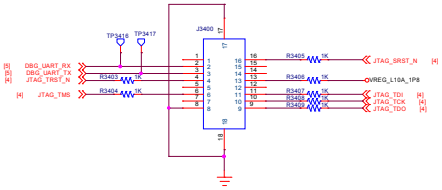

File	<Title>		
Size: D	Document Number <Doc>		Rev <RevCode>
Date: Tuesday, May 12, 2020	Sheet 33 of 43		

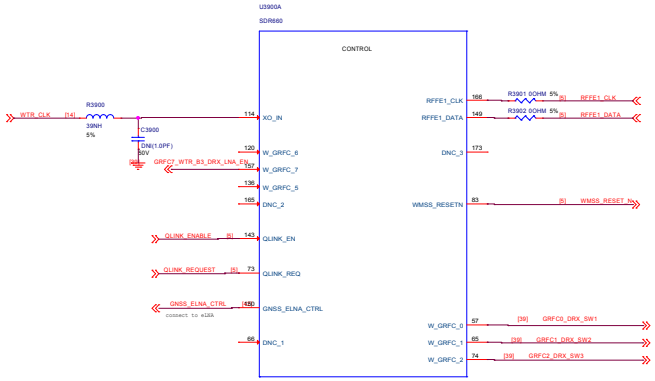

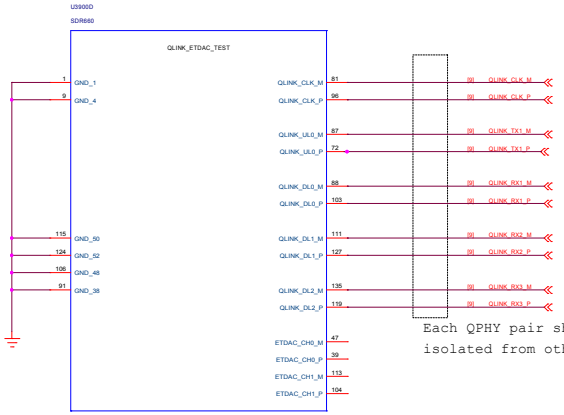

Each QPHY pair shall be routed in a channel together isolated from other QPHY pairs with surrounding gnd

QPHY_ETDAC_TEST

SDR660: MSS

File	<Title>		
Size D	Document Number <Doc>		Rev <RevCode>
Date: Tuesday, May 12, 2020	Sheet 34 of 43		

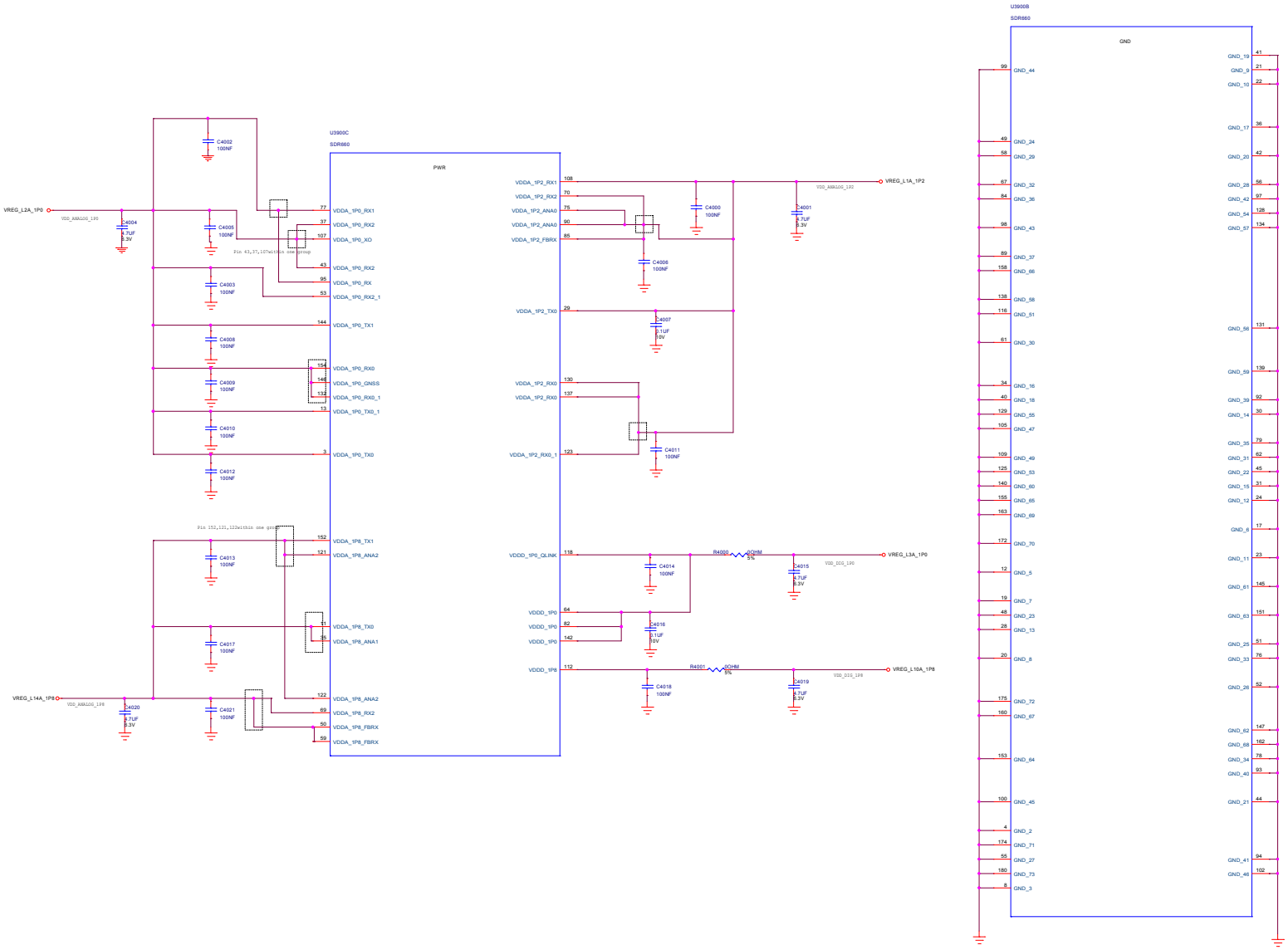

SDR660: PWR

Title: <Title>		
Size: D	Document Number: <Doc>	Rev: <RevCode>
Date: Tuesday, May 12, 2020	Sheet: 35 of 43	

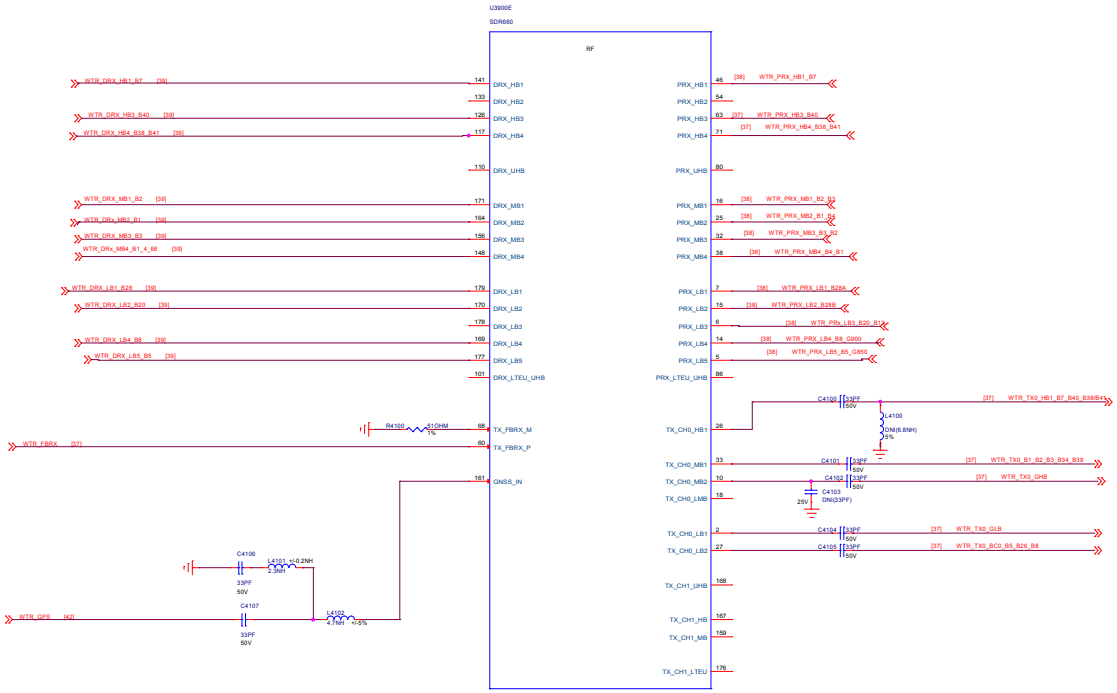

SDR660: DA/PRX/DRX/FBRX

File	<Title>		
Size: D	Document Number: <Doc>		Rev: <RevCode>
Date: Tuesday, May 12, 2020	Sheet 38 of 43		

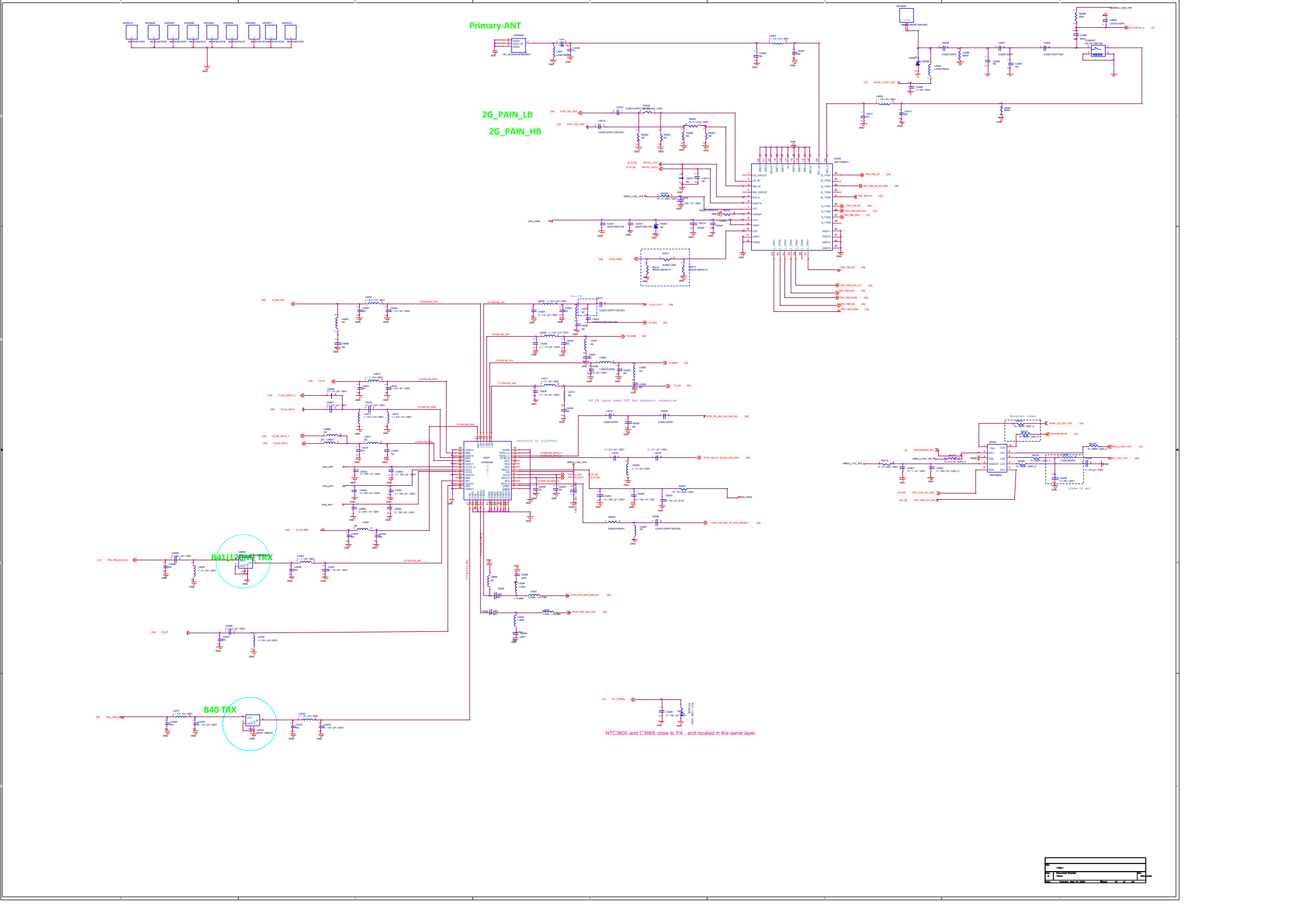
Primary-ANT
2G_PAIN_LB
2G_PAIN_HB
B41(120M) TRX
B40 TRX
4G PA input need LPF for harmonic rejection
sequence by alphabet
Parallel lines
close to ant
NTC3600 and C3669 close to PA , and located in the same layer

SKU1 :B1 TRX
SKU2 &3 :B4/66 TRX

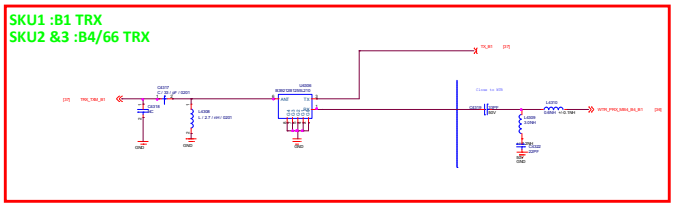

SKU1 : B3 TRX
SK2&3 : B2 TRX

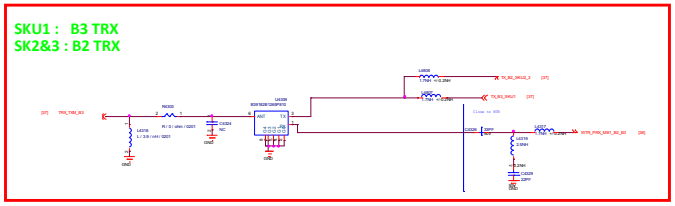

SKU1:B2+B4/66 TRX
SKU2&3: B1+3 TRX

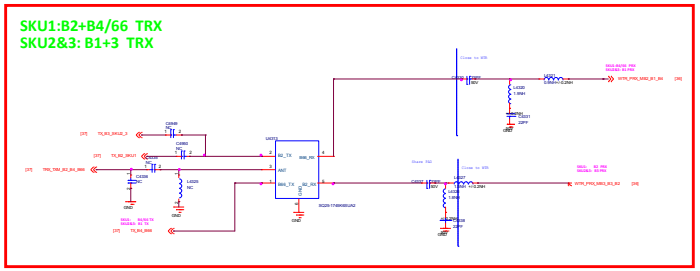

B7 TRX

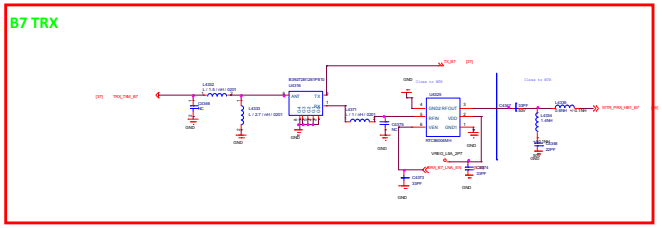

B5/26 TRX

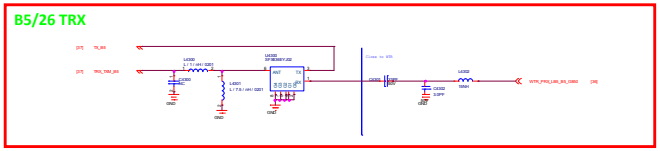

SKU1:B12_17 TRX

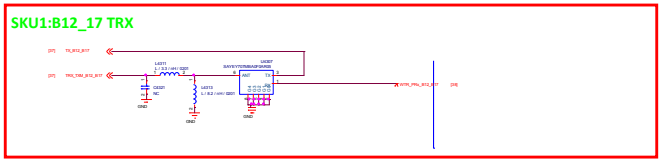

SKU2:B20_TRX

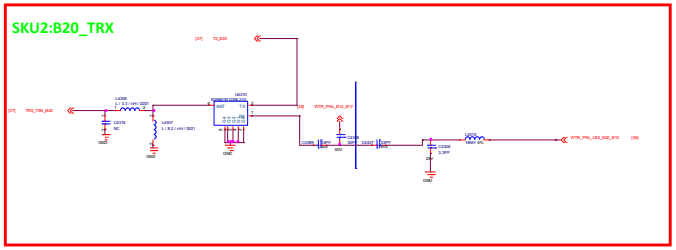

B8 TRX

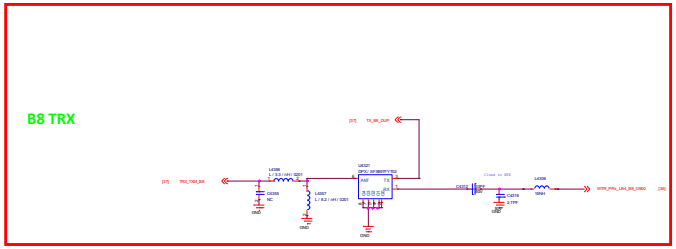

B28A TRX

B28B TRX

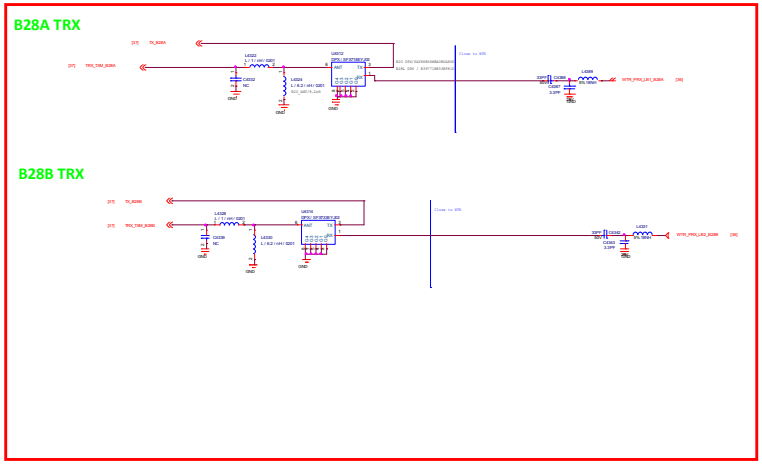

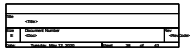

LMB DIV ANT

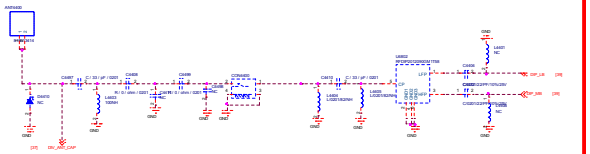

MB SPDT SWITCH

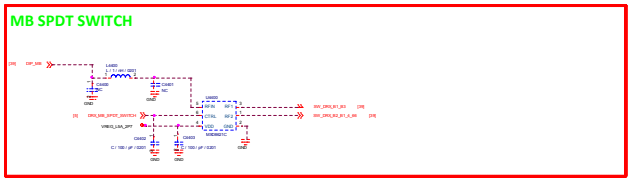

LMB DIV ANT Tunner Switch

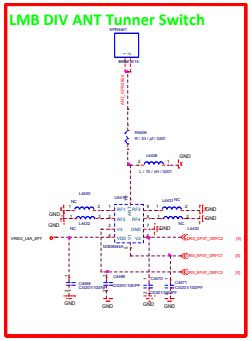

HB MAIN ANT Tunner Switch

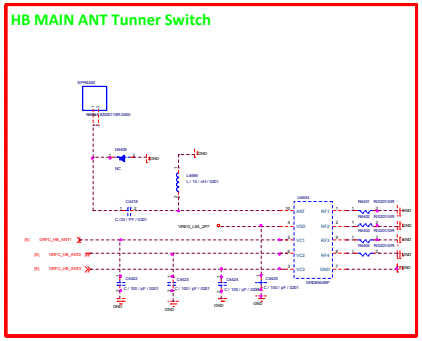

LB SP4T SWITCH

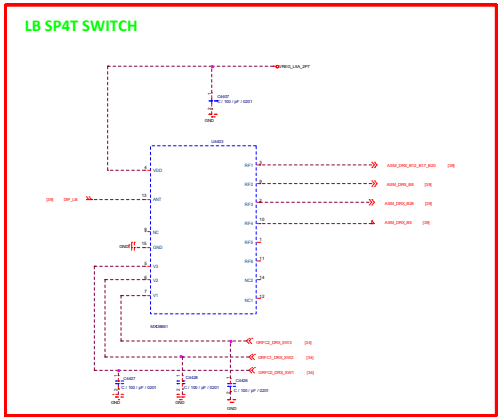

SKU1:B3 DRX
SKU2&3:B1+B3 DRX

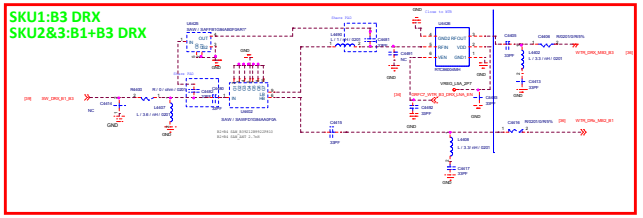

SKU1:B2+B1/4/66 DRX
SKU2&3:B2+B4/66 DRX

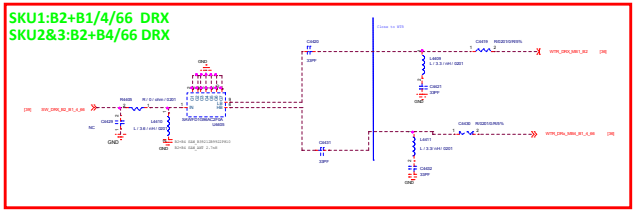

B5 DRX

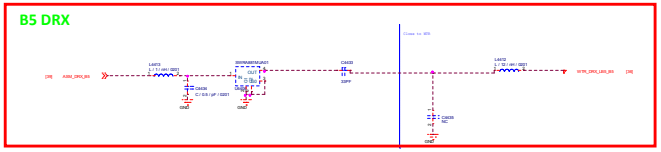

SKU1:B12 /17 DRX
SKU2:B20+eLNA DRX

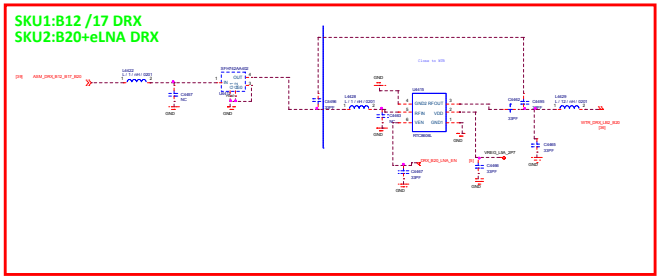

HB DIV ANT

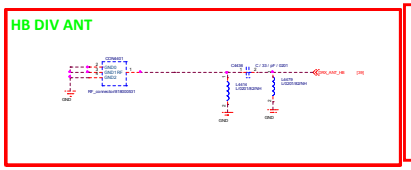

HB SP3T SWITCH

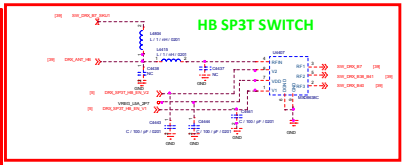

B7 DRX

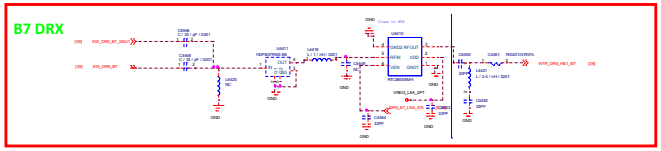

B8 DRX

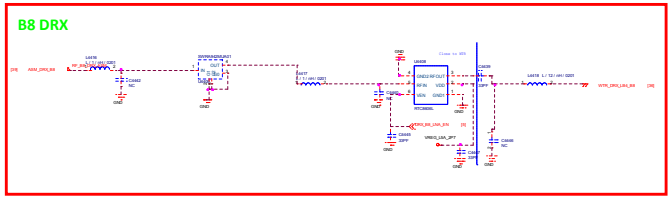

B40 DRX

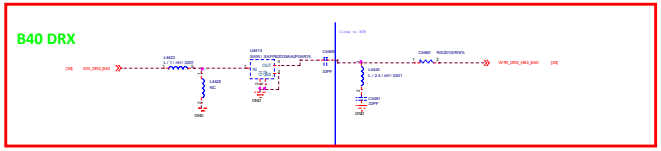

B28 _ DRX

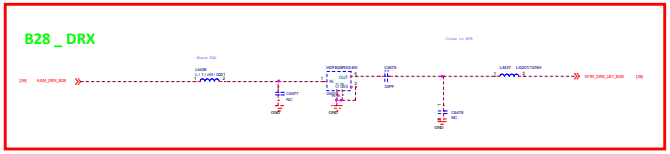

B38_B41 DRX

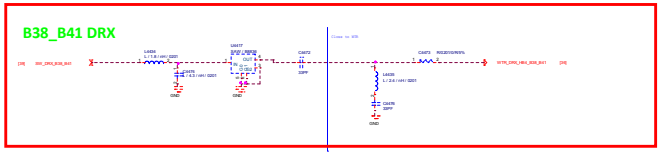

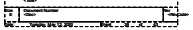

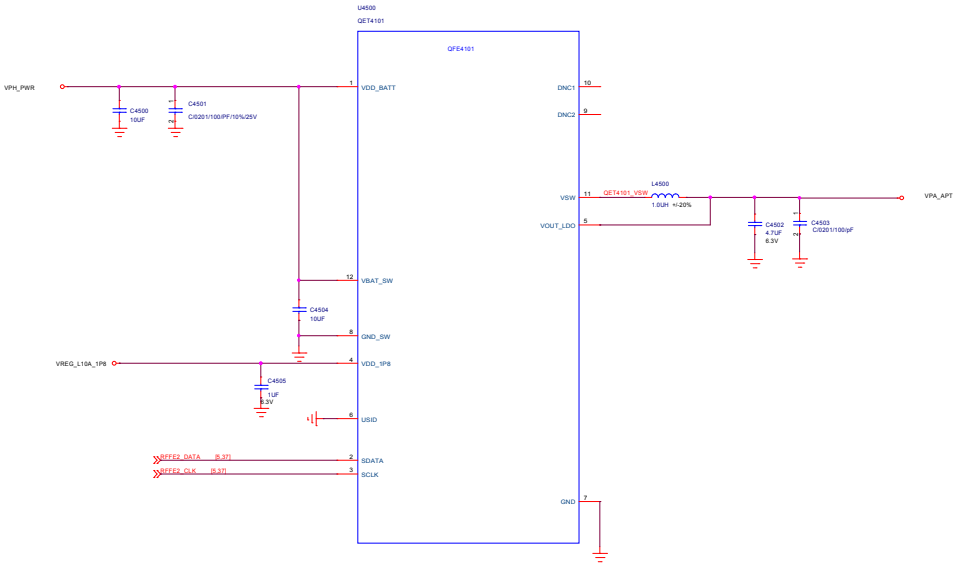

Title	<Title>		
Size D	Document Number <Doc>		Rev <RevCode>
Date: Tuesday, May 12, 2020	Sheet 40 of 43		

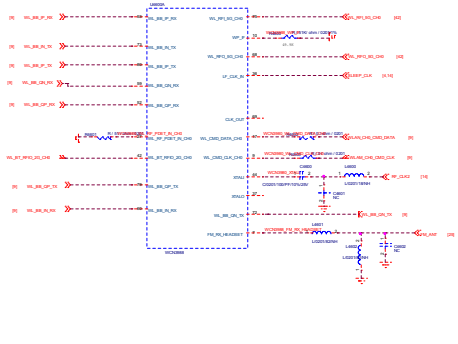

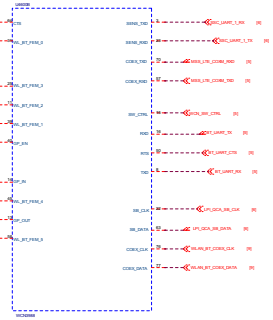

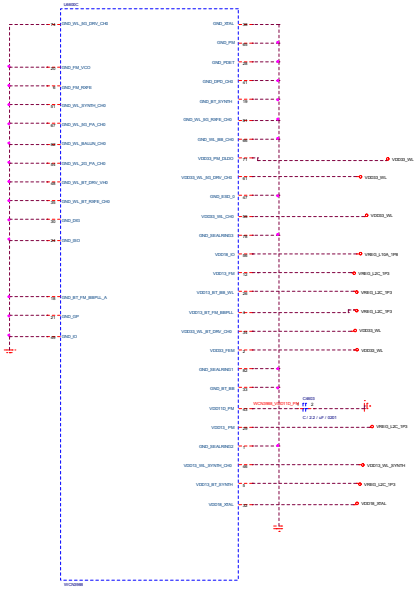

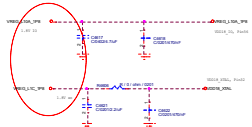

PMIC Rail	Pin Name	Pin Number	Peak current at pin(mA)
1.3V_RFA	VDD13_BT_RB_WL	28	120
	VDD13_WL_SYNTH_CH0	46	40
	VDD13_BT_SYNTH	5	15
	VDD11D_PM	43	20
	VDD13_FM	12	15
	VDD13_BT_FM_BBPLL	4	10
	VDD13_BT_PM	29	20
3.3V_CH0	VDD33_WL_CH0	55	450
	VDD33_WL_SCPA_DRV_CH0	61	70
	VDD33_WL_BT_DRV_CH0	34	65
	VDD33_PM_DLDO	71	5
	VDD33_FEM	2	1
1.8V_IO	VDD18_IO	56	15
1.8V_XO	VDD18_XTAL	32	60

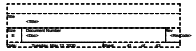

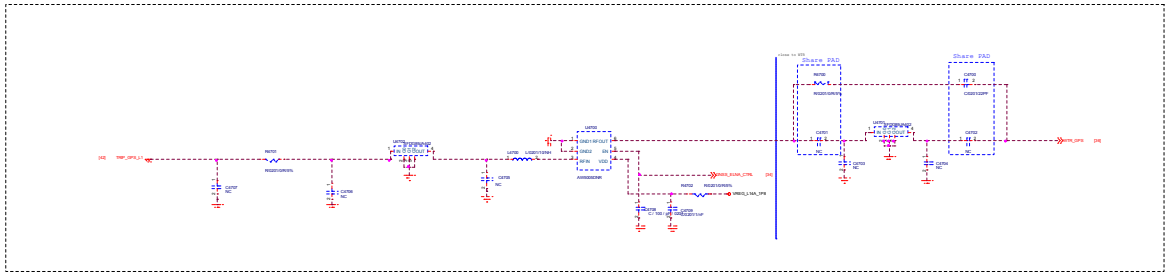
Share PAD
Share PAD
GPS L1

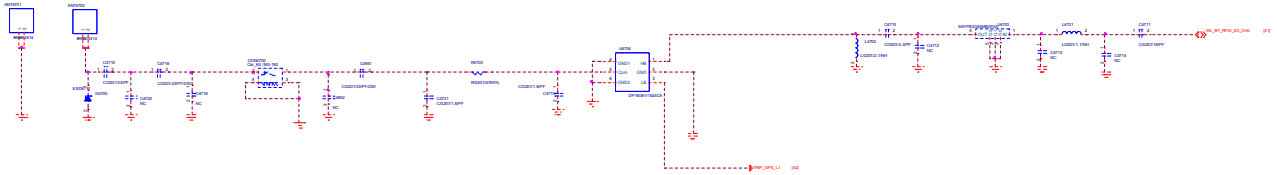

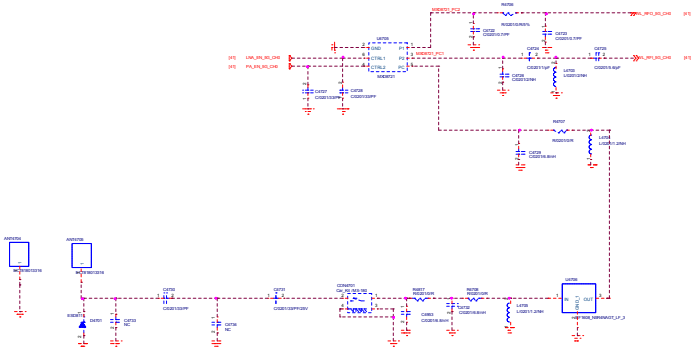

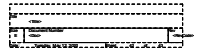

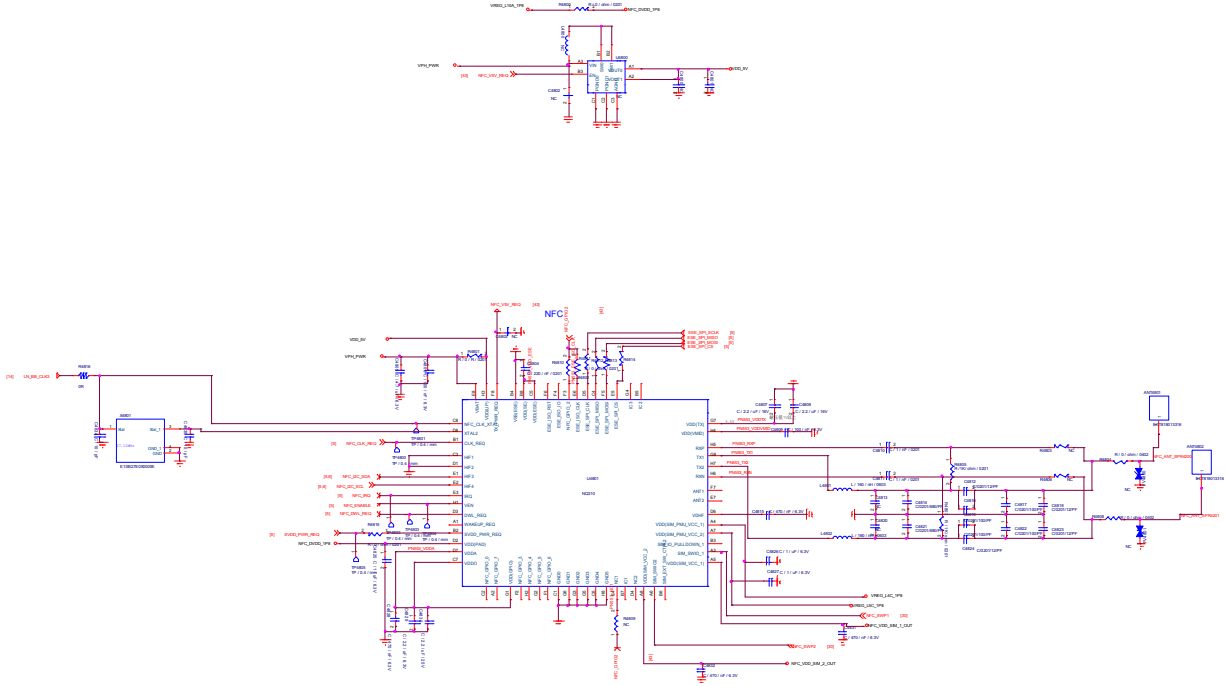

Title	<Title>		
Size	Document Number		Rev
B	<Doc>		<RevCode>
Date:	Tuesday, May 23, 2023	Sheet	of