	Symbol	Vout(V)	Iout (mA)	Description
Buck	VCORE	0.7~1.4	2800	Digital CORE
	VSYS	1.825/2.2	1400	System
	VPA	0.5~3.4	600	RF Chip
VSYS LDO	VM	1.24/1.39/1.54/1.84	700/600/600/300	External Memory
	VIO18	1.8V	300	Digital IO
	VRF18	1.825V	200	3G power amplifier
	VGP3	1.2/1.3/1.5/1.8V	200	General purpose LDO3
	VCAMD	1.2/1.3/1.5/1.8V	150	Digital power for camera module
	VCAM_IO	1.8V	100	Digital power for camera IO
	VCONN_1V8	1.8V	120	WiFi/BT/FM/GPS power
Analog LDO	VA	2.8V	150	Analog baseband
	VTCXO	2.8V	40	13/26MHz refernce clock
	VCONN28	2.8V	30	WiFi/BT/FM/GPS power
	VCAMA	2.8V	150	Analog power for camera module
Digital LDO	VCONN33	3.3/3.4/3.5/3.6V	240	WiFi/BT/FM/GPS power
	VEMMC_3V3	3.0/3.3	400	3.3V EMMC
	VMCH	3.0/3.3	400	SD 2.0/3.0 memory card
	VUSB	3.3	20	USB
	VIO28	2.8	200	Digital IO
	VMC	1.8/3.3	100	SD 3.0 memory card
	VSIM1	1.8/3.0V	50	1nd SIM Card
	VSIM2	1.8/3.0V	50	2nd SIM Card
	VDIG18	1.8	20	Digital power
	VCAM_AF	1.2/1.3/1.5/1.8/2.5/2.8/3.0/3.3	100	Digital power for camera Auto Focus
	VGP1	1.2/1.3/1.5/1.8/2.5/2.8/3.0/3.3	100	General purpose LDO1
	VGP2	1.2/1.3/1.5/1.8/2.5/2.8/3.0	100	General purpose LDO2
	VIBR	1.2/1.3/1.5/1.8/2.5/2.8/3.0/3.3	100	Vibrator
RTC	VRTC	2.8V	2	Real-time Clock

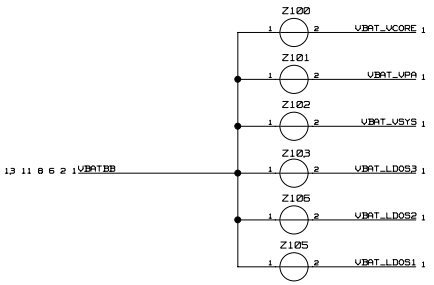

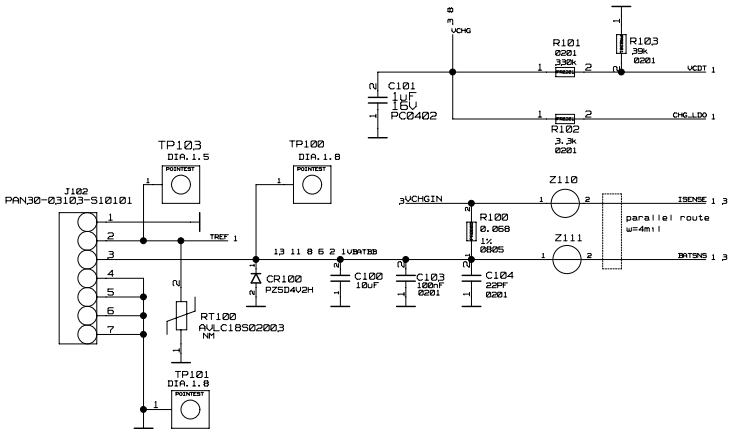

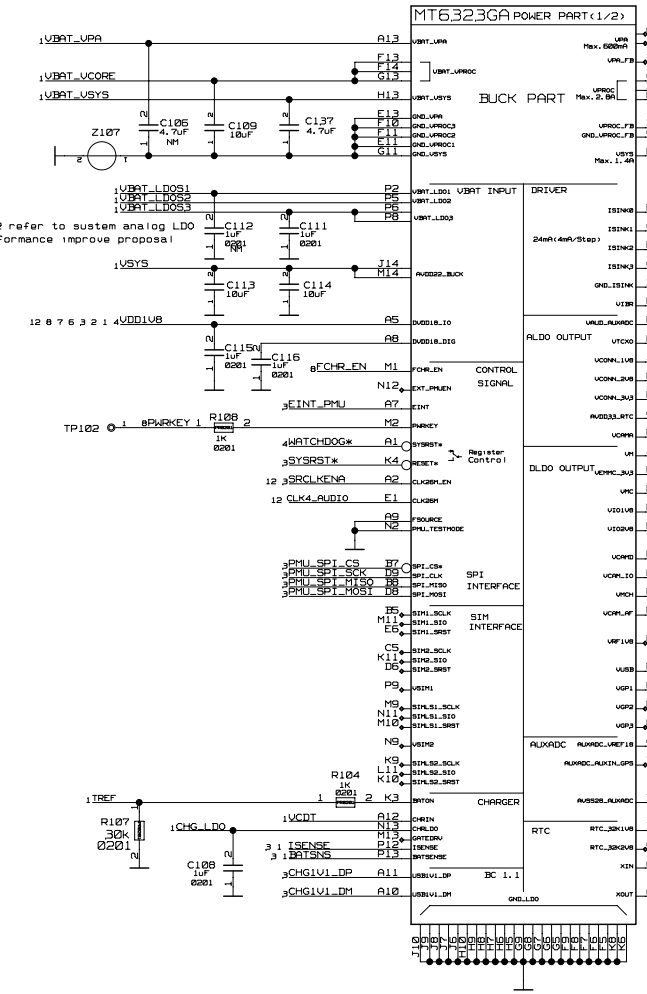

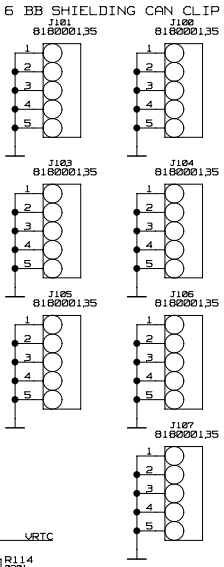

BL103
SHIELDING RF
28622270-2

BB COVER
286222690

DEFINITIONS

DRAWING:
BOARD MQ16 MMI V01
board mq16 mmi v01
LAST_MODIFIED=Fri Apr 25 14:37:30 2014

ALL RIGHTS RESERVED. REPRODUCTION AND DISCLOSURE PROHIBITED

VER.	DATE
V00	10/4

MODIFIED	NAME	DATE	CHECKED	NAME	DATE
	SCHEMATIC	21/4/2014		SCHEMATIC	21/4/2014

TITLE: MT6323
Product Name: SCHEMATIC BOARD MQ16 MMI V01
SageReal 伊瑞科技
PAGE/SHEET 1 /19
P.N.
FORMAT SIZE A2
DOCUMENT NUMBER | TYPE | PART | VERS.

SCH DRAWING A2

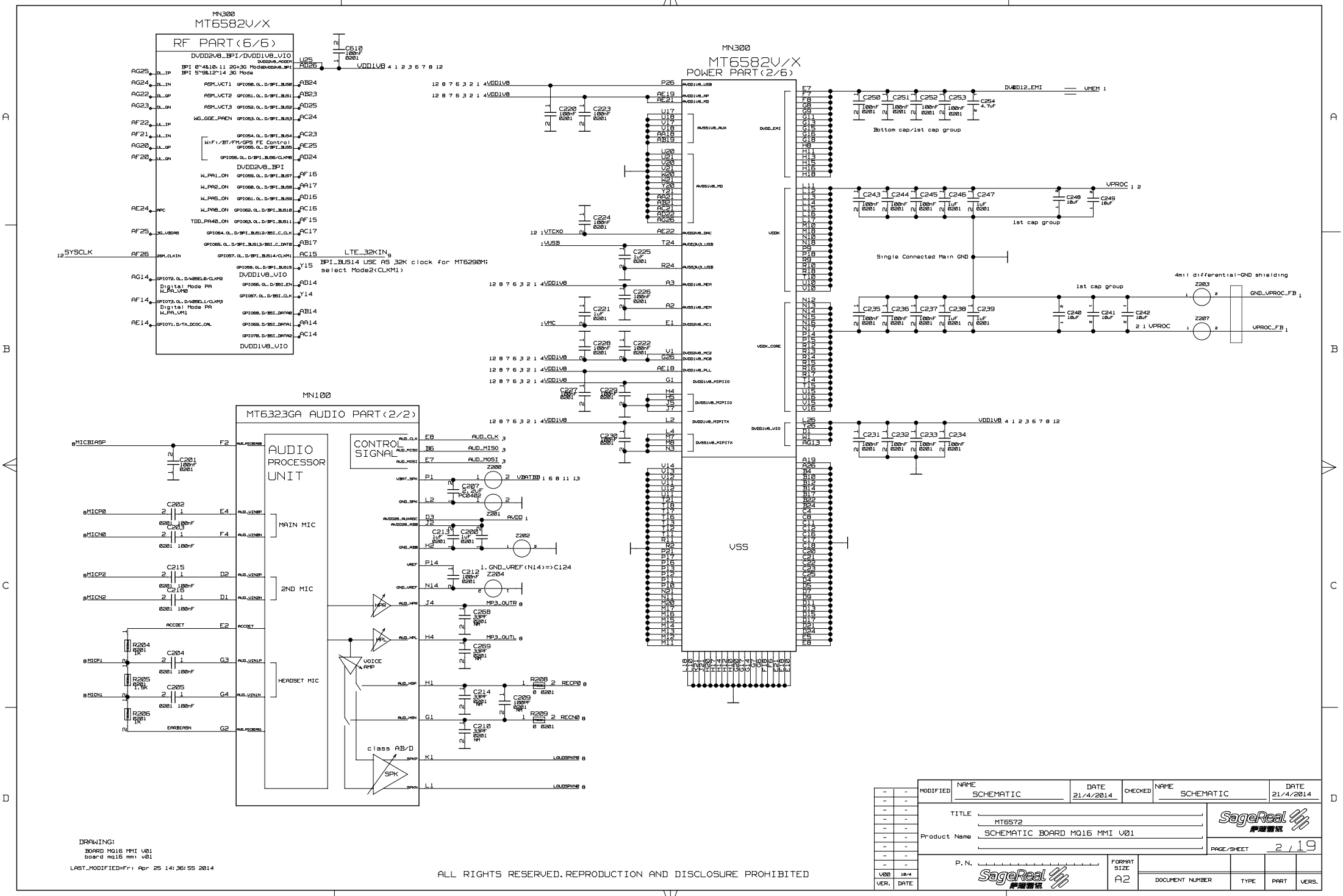

ALL RIGHTS RESERVED. REPRODUCTION AND DISCLOSURE PROHIBITED

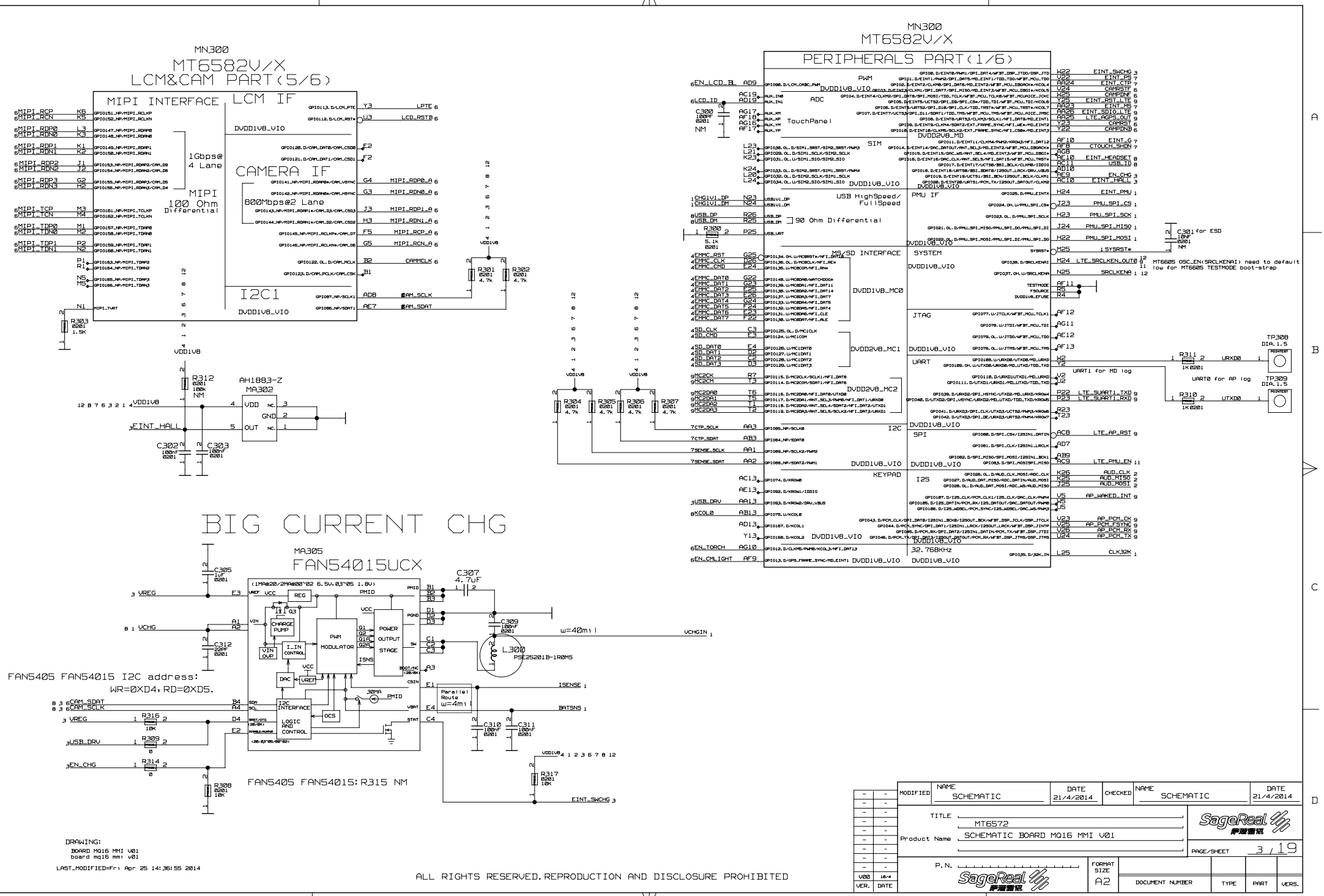

ALL RIGHTS RESERVED. REPRODUCTION AND DISCLOSURE PROHIBITED

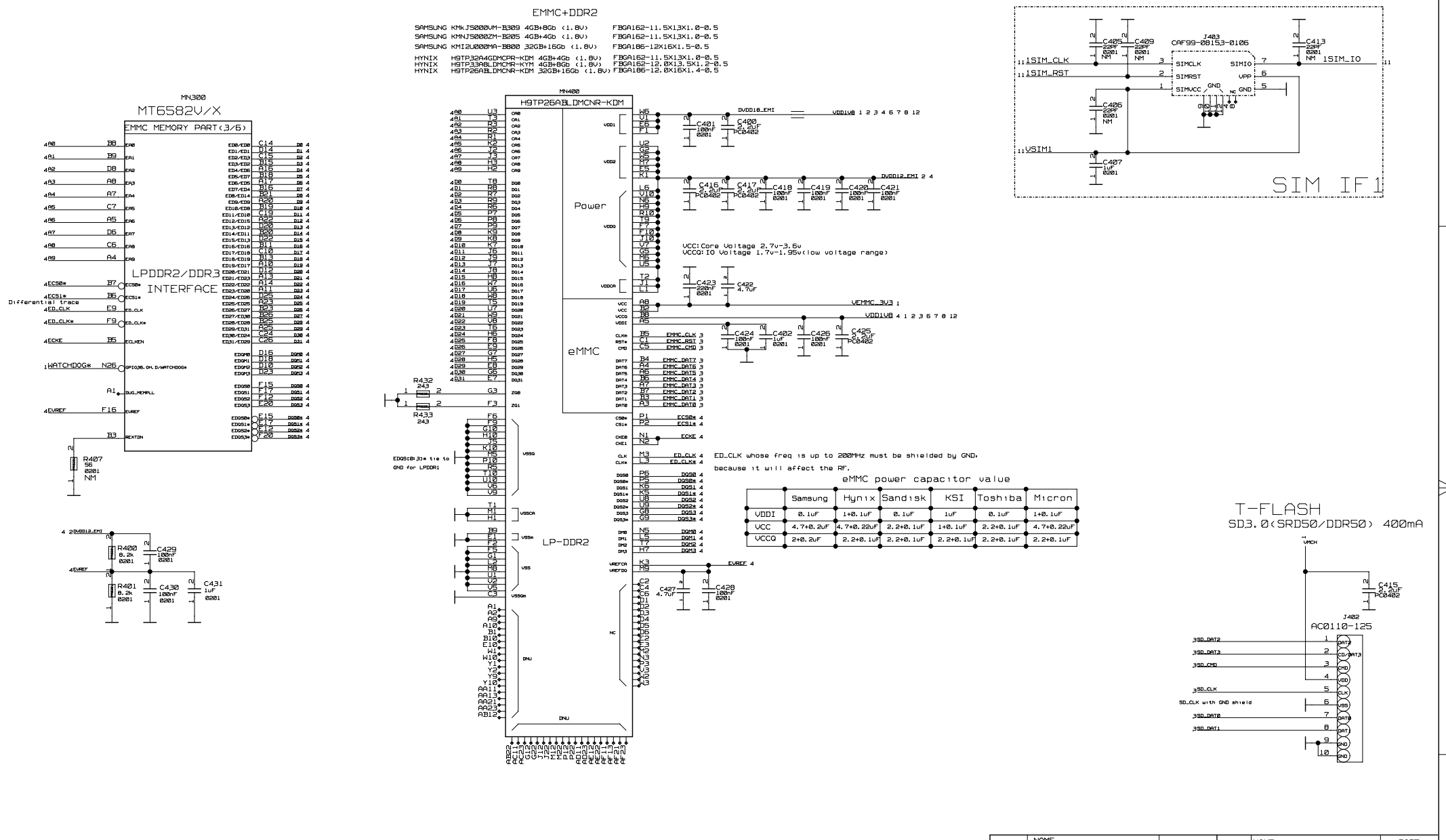
EMMC+DDR2
SAMSUNG KMKJS000VM-B309 4GB+8Gb (1.8V) FBGA162-11.5X13X1.0-0.5
SAMSUNG KMNJS000ZM-B205 4GB+4Gb (1.8V) FBGA162-11.5X13X1.0-0.5
SAMSUNG KMI2U000MA-B800 32GB+16Gb (1.8V) FBGA186-12X16X1.5-0.5
HYNIX H9TP32A4GDMCPR-KDM 4GB+4Gb (1.8V) FBGA162-11.5X13X1.0-0.5
HYNIX H9TP33A8LDMCMR-KYM 4GB+8Gb (1.8V) FBGA162-12.0X13.5X1.2-0.5
HYNIX H9TP26A8LDMCNR-KDM 32GB+16Gb (1.8V) FBGA186-12.0X16X1.4-0.5
MN300
MT6582V/X
EMMC MEMORY PART(3/6)
LPDDR2/DDR3 INTERFACE
Differential trace
MN400
H9TP26A8LDMCNR-KDM
Power
eMMC
LP-DDR2
VCC:Core Voltage 2.7v-3.6v
VCCQ:IO Voltage 1.7v-1.95v(low voltage range)
EDQS0:3:* tie to GND for LPDDR1
ED_CLK whose freq is up to 200MHz must be shielded by GND, because it will affect the RF.
eMMC power capacitor value
Samsung Hynix Sandisk KSI Toshiba Micron
VDDI 0.1uF 1+0.1uF 0.1uF 1uF 0.1uF 1+0.1uF
VCC 4.7+0.2uF 4.7+0.22uF 2.2+0.1uF 1+0.1uF 2.2+0.1uF 4.7+0.22uF
VCCQ 2+0.2uF 2.2+0.1uF 2.2+0.1uF 2.2+0.1uF 2.2+0.1uF 2.2+0.1uF
SIM IF1
J403
CAF99-08153-0106
SIMCLK
SIMRST
SIMVCC
SIMIO
VPP
GND
T-FLASH
SD3.0(SRD50/DDR50) 400mA
J402
AC0110-125
SD_CLK with GND shield
DRAWING:
BOARD MQ16 MMI V01
board mq16 mmi v01
LAST_MODIFIED=Fri Apr 25 14:36:56 2014
ALL RIGHTS RESERVED.REPRODUCTION AND DISCLOSURE PROHIBITED
MODIFIED NAME SCHEMATIC DATE 21/4/2014
CHECKED NAME SCHEMATIC DATE 21/4/2014
TITLE MEMORY EMMC+LPDDR2 OR NAND+LPDDR2
Product Name SCHEMATIC BOARD MQ16 MMI V01
SageReal
PAGE/SHEET 4 / 19
P.N.
FORMAT SIZE A2
DOCUMENT NUMBER TYPE PART VERS.
V00 10/4
VER. DATE
SCH DRAWING A2

WIFI/BT/GPS ANT

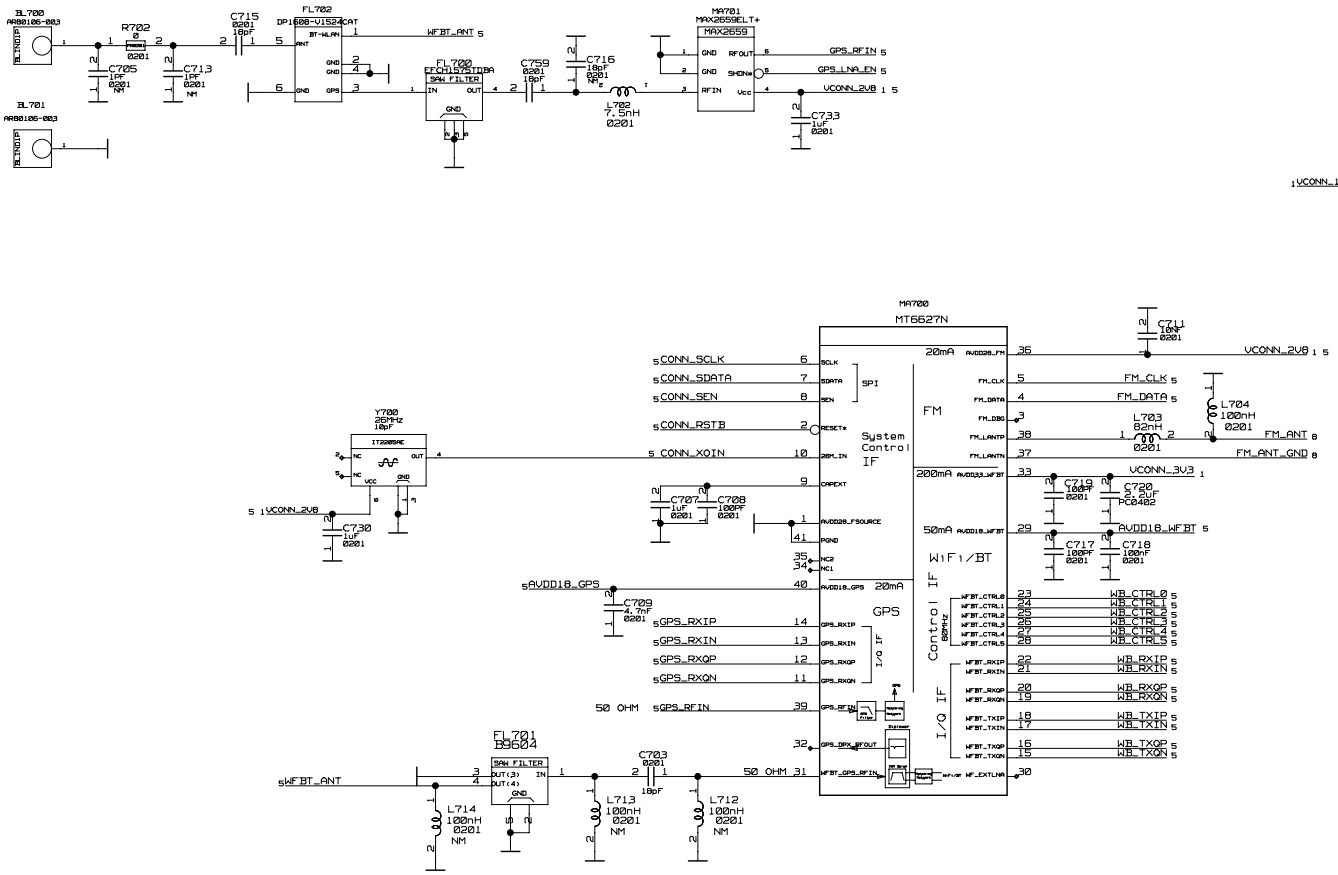

DRAWING:
BOARD MQ16 MMI V01
board mq16 mmi v01

LAST_MODIFIED=Fri Apr 25 14:36:54 2014

ALL RIGHTS RESERVED. REPRODUCTION AND DISCLOSURE PROHIBITED

VER.	DATE
V00	18/4

MODIFIED	NAME	DATE	CHECKED	NAME	DATE
	SCHEMATIC	21/4/2014		SCHEMATIC	21/4/2014

TITLE: MT6627(W1F1/BT/GPS/FM)

Product Name: SCHEMATIC BOARD MQ16 MMI V01

SageReal 伊瑞科技

PAGE/SHEET 5 / 19

P.N.

FORMAT SIZE A2

DOCUMENT NUMBER	TYPE	PART	VERS.

SCH DRAWING A2

EASYQUICK 4.98" LQ050APTP034A-CD
Display Format:QHD 960(RGB)*540
Driver IC:OTM9605A 6*2 SERIAL LED

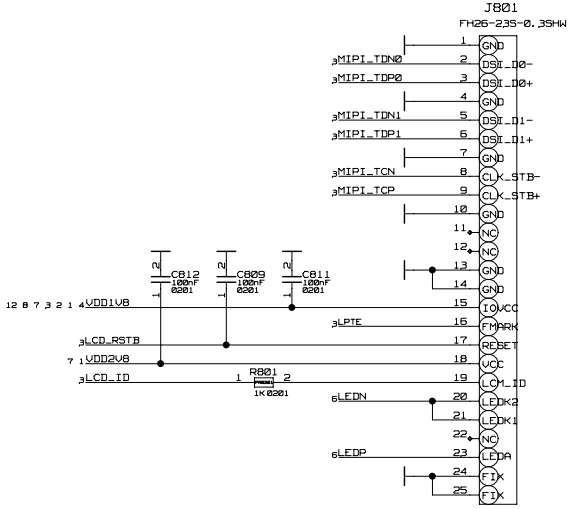

0.3M/2M Camera

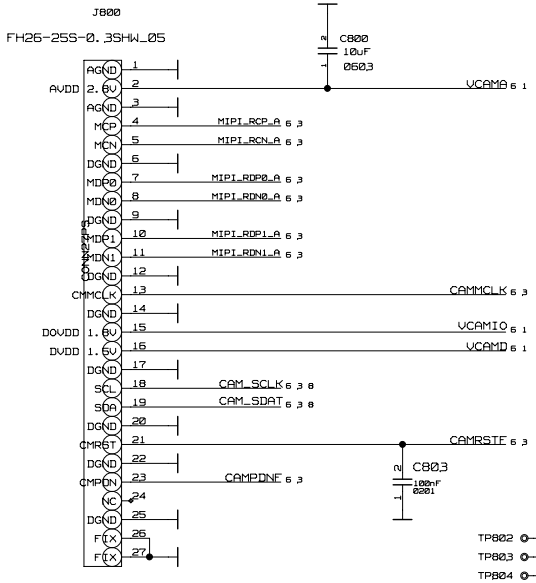

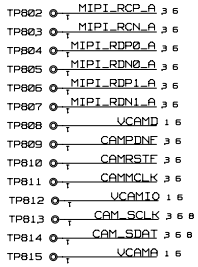

5M/8M/13M AF CAMERA

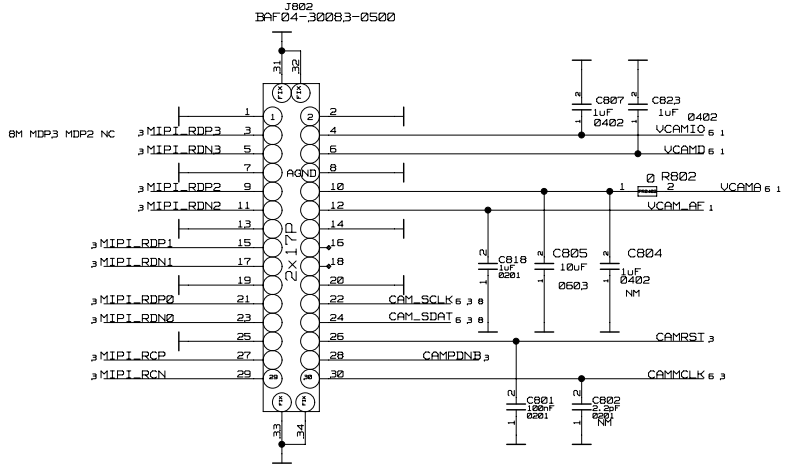

LCD White LED driver

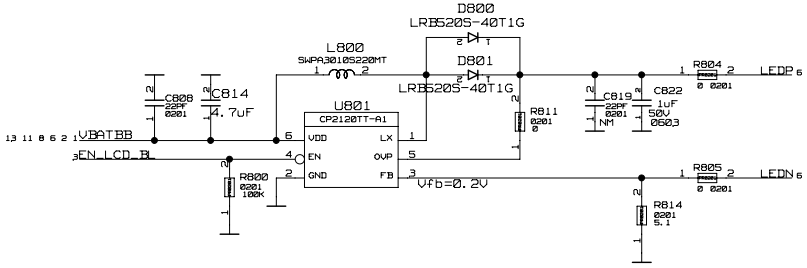

CP2123ST-AT Vfb=0.3V R811=100K R814=7.5
CP2120TT-A1/APW7207BCTI-TRG Vfb=0.2V R811=0 R814=5.1

RGB DRIVER

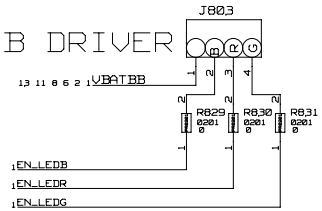

FLASH DRIVER

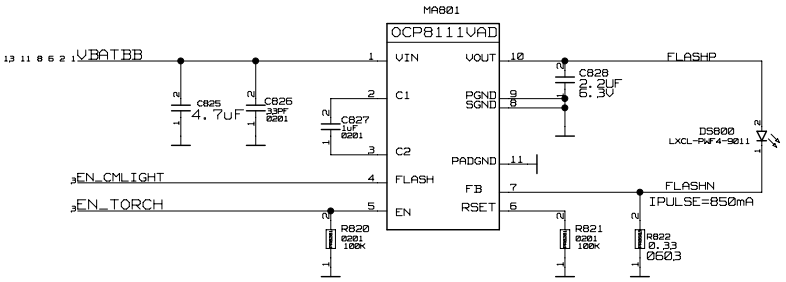

DRAWING:
BOARD MQ16 MMI V01
board mq16 mmi v01
LAST_MODIFIED=Fri Apr 25 14:36:54 2014

ALL RIGHTS RESERVED.REPRODUCTION AND DISCLOSURE PROHIBITED

MODIFIED	NAME SCHEMATIC	DATE 21/4/2014	CHECKED	NAME SCHEMATIC	DATE 21/4/2014	
TITLE	LCD&CAMERA					
Product Name	SCHEMATIC BOARD MQ16 MMI V01					
					PAGE/SHEET	6 / 19
P.N.		FORMAT SIZE A2	DOCUMENT NUMBER		TYPE	PART	VERS.

VER.	DATE
V00	10/4

SCH DRAWING A2

Proximity Sensor With Ambient Light SENSOR

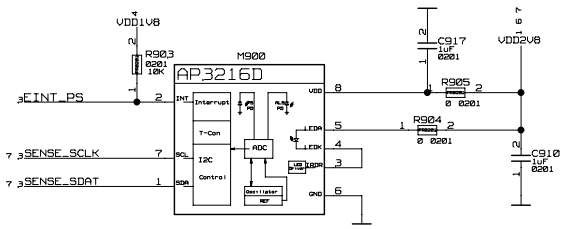

ADDR=0, I2C address:WR=0X90,RD=0X91.

G SENSOR

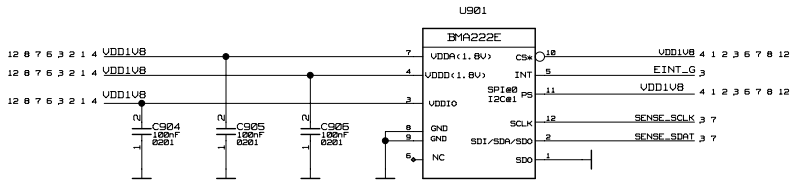

in I2C mode,CS* sets the I2C address;
BMA220: CS*=0, I2C address:WR=0X16,RD=0X17.
CS*=1, I2C address:WR=0X14,RD=0X15.
BMA222E: SDO=0, I2C address:WR=0X30,RD=0X31.

Capacitive TOUCH SENSOR

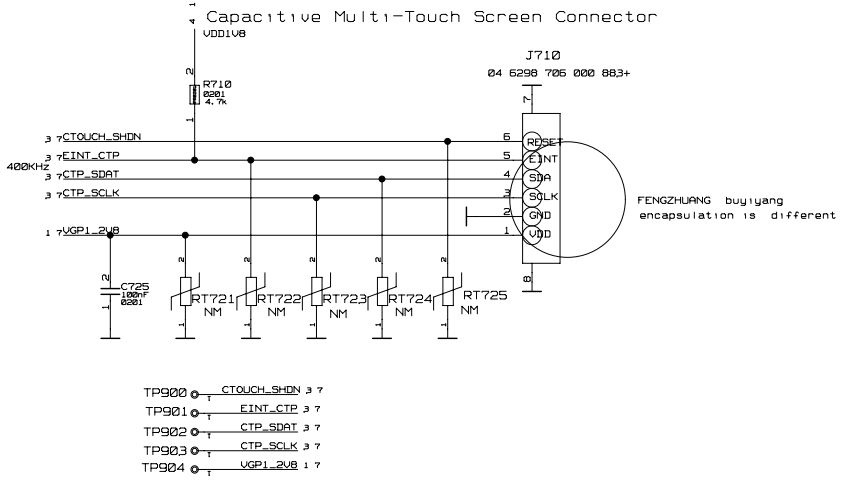

Magnetic Sensor

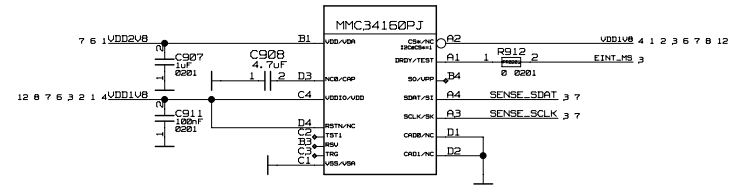

AK8963C C908 NC
R912 0 R

MMC34160PJ C908 4.7UF
R912 NC

AK8963C

CAD1	CAD0	I2C Address
0	0	0001100R/W
0	1	0001101R/W
1	0	0001110R/W
1	0	0001111R/W

MMC3416xPJ

CODE	I2c Address
0	0110000b
1	0110001b
2	0110010b
3	0110011b
4	0110100b
5	0110101b
6	0110110b
7	0110111b

DRAWING:
BOARD MQ16 MMI V01
board mq16 mmi v01

LAST_MODIFIED=Fri Apr 25 14:36:55 2014

ALL RIGHTS RESERVED.REPRODUCTION AND DISCLOSURE PROHIBITED

VER.	DATE
V00	18/4

MODIFIED	NAME	DATE	CHECKED	NAME	DATE
	SCHEMATIC	21/4/2014		SCHEMATIC	21/4/2014

TITLE: SENSOR&CAPACITIVE MULTI TOUCH
Product Name: SCHEMATIC BOARD MQ16 MMI V01

SageReal 萨瑞微纸

PAGE/SHEET 7 / 19

P.N.

FORMAT SIZE A2

DOCUMENT NUMBER	TYPE	PART	VERS.

SCH DRAWING A2

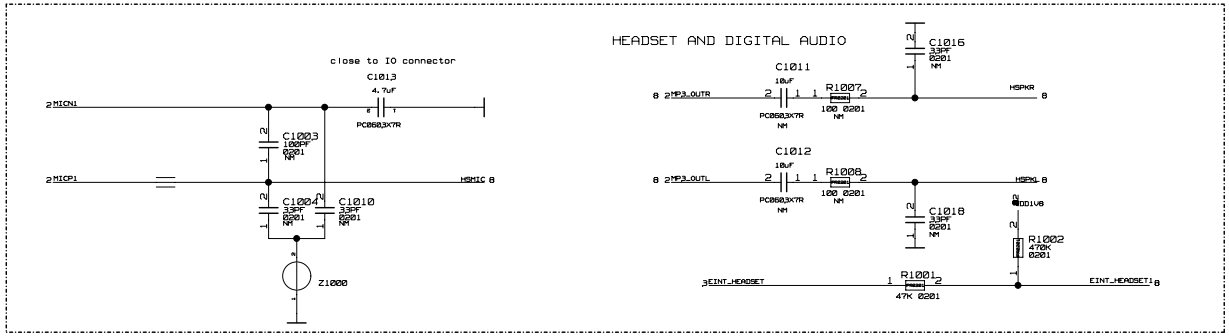

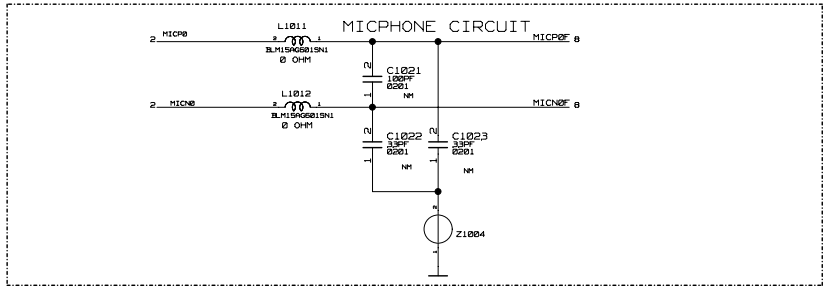

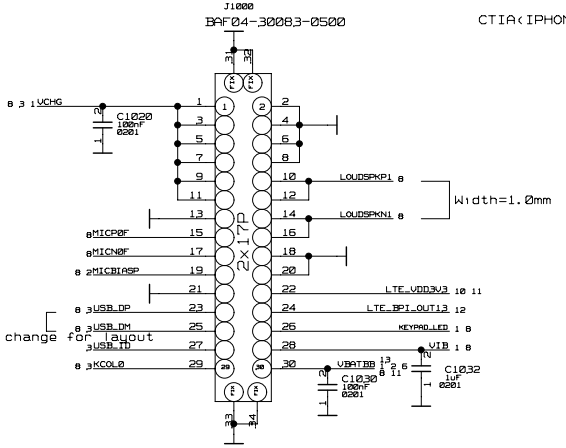

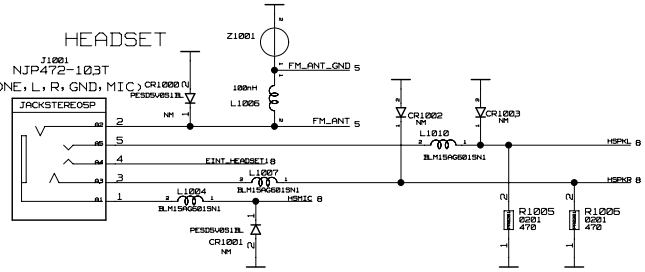

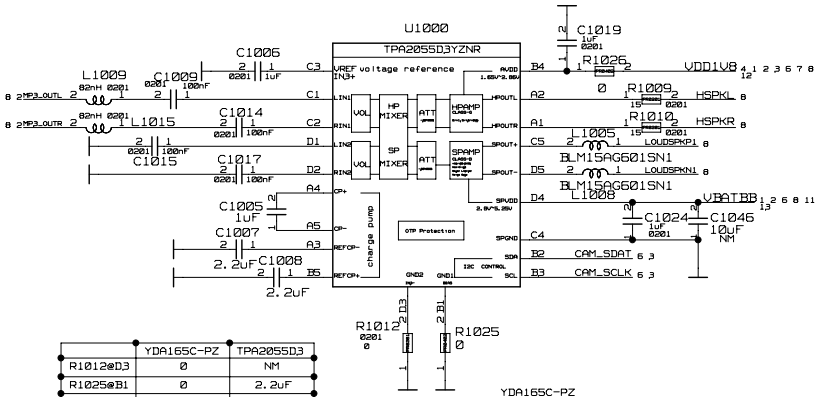

	YDA165C-PZ	TPA2055D3
R1012@D3	0	NM
R1025@B1	0	2.2uF
C1006@C3	1uF	NM
L1009	82nH	0
L1015	82nH	0
C1009	100nF	470nF
C1014	100nF	470nF
C1015	100nF	NM
C1017	100nF	NM

YDA165C-PZ

I2C address:WR=0XD8,RD=0XD9.

TPA2055D3

I2C address:WR=0XE0,RD=0XE1.

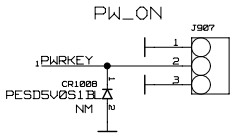

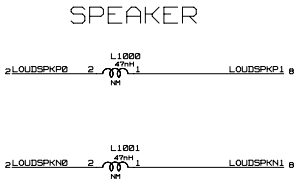

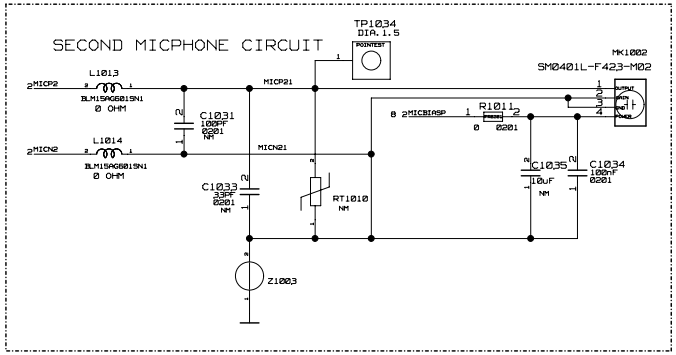

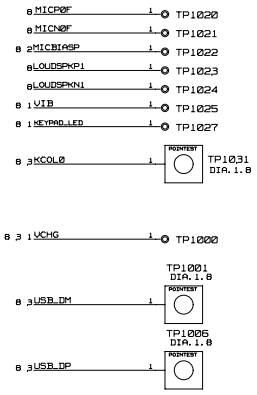

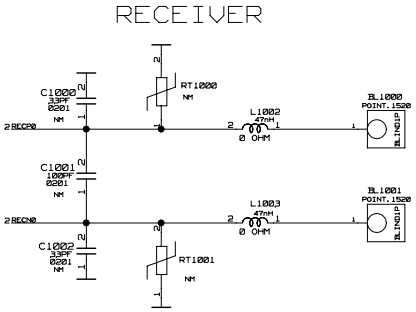

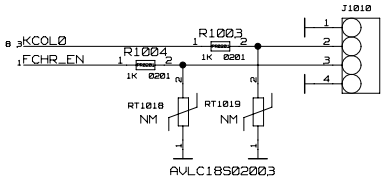

DRAWING:
BOARD MQ16 MMI V01
board mq16 mmi v01

LAST_MODIFIED=Fri Apr 25 14:36:51 2014

ALL RIGHTS RESERVED.REPRODUCTION AND DISCLOSURE PROHIBITED

MODIFIED	NAME: SCHEMATIC	DATE: 21/4/2014	CHECKED	NAME: SCHEMATIC	DATE: 21/4/2014

TITLE: AUDIO&CONNECTER

Product Name: SCHEMATIC BOARD MQ16 MMI V01

SageReal 萨瑞微电子

PAGE/SHEET: 8 / 19

P.N.

FORMAT SIZE: A2

DOCUMENT NUMBER	TYPE	PART	VERS.

VER.	DATE
V00	10/4

SCH DRAWING A2

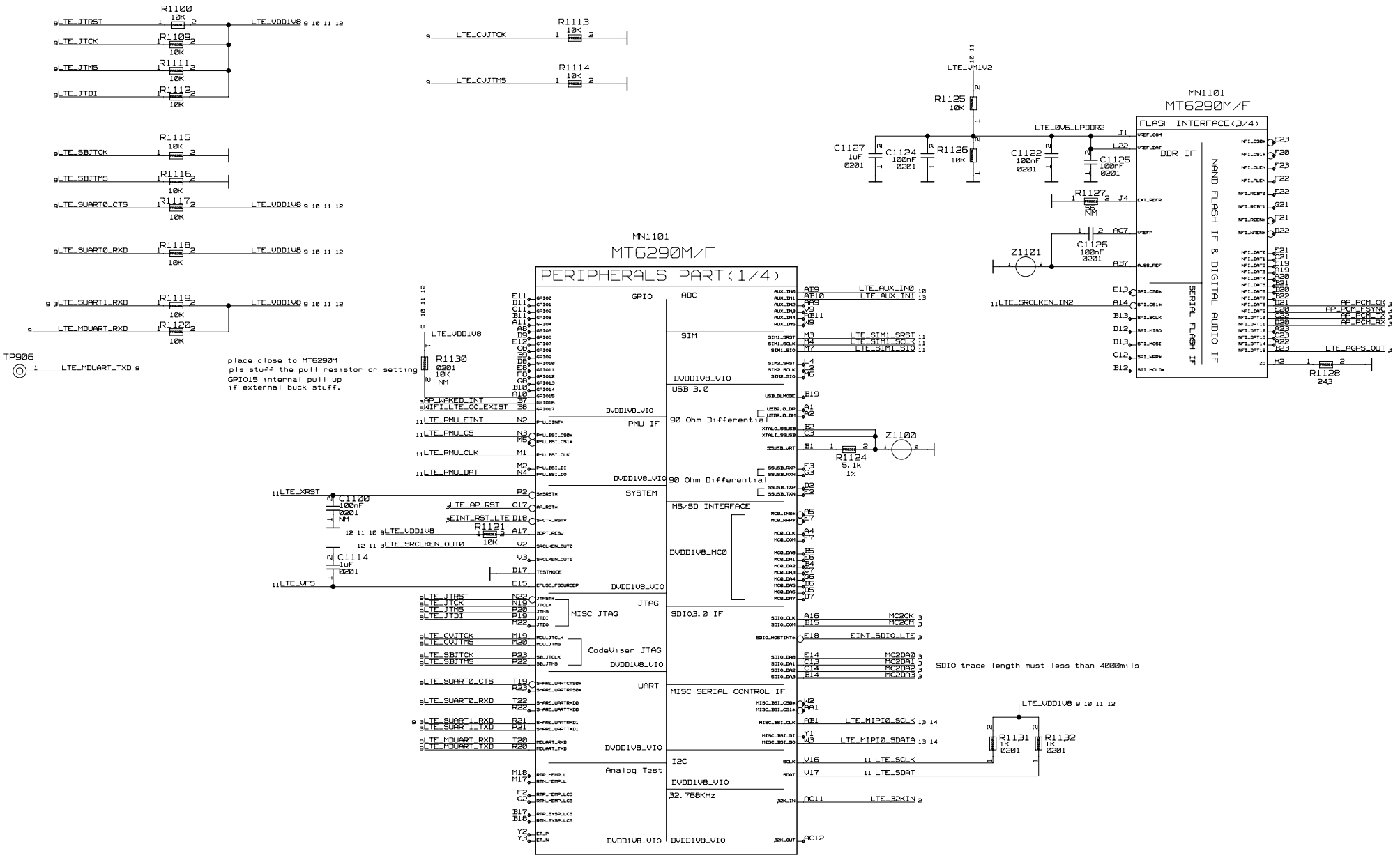

DRAWING:
BOARD MQ16 MMI V01
board mq16 mmi v01

LAST_MODIFIED=Fri Apr 25 14:36:50 2014

ALL RIGHTS RESERVED.REPRODUCTION AND DISCLOSURE PROHIBITED

MODIFIED	NAME: SCHEMATIC	DATE: 21/4/2014	CHECKED	NAME: SCHEMATIC	DATE: 21/4/2014

TITLE: MT6290M

Product Name: SCHEMATIC BOARD MQ16 MMI V01

SageReal 伊瑟图纸

PAGE/SHEET: 9 / 19

P.N.

VER.	DATE
V00	10/4

FORMAT SIZE: A2

DOCUMENT NUMBER	TYPE	PART	VERS.

SCH DRAWING A2

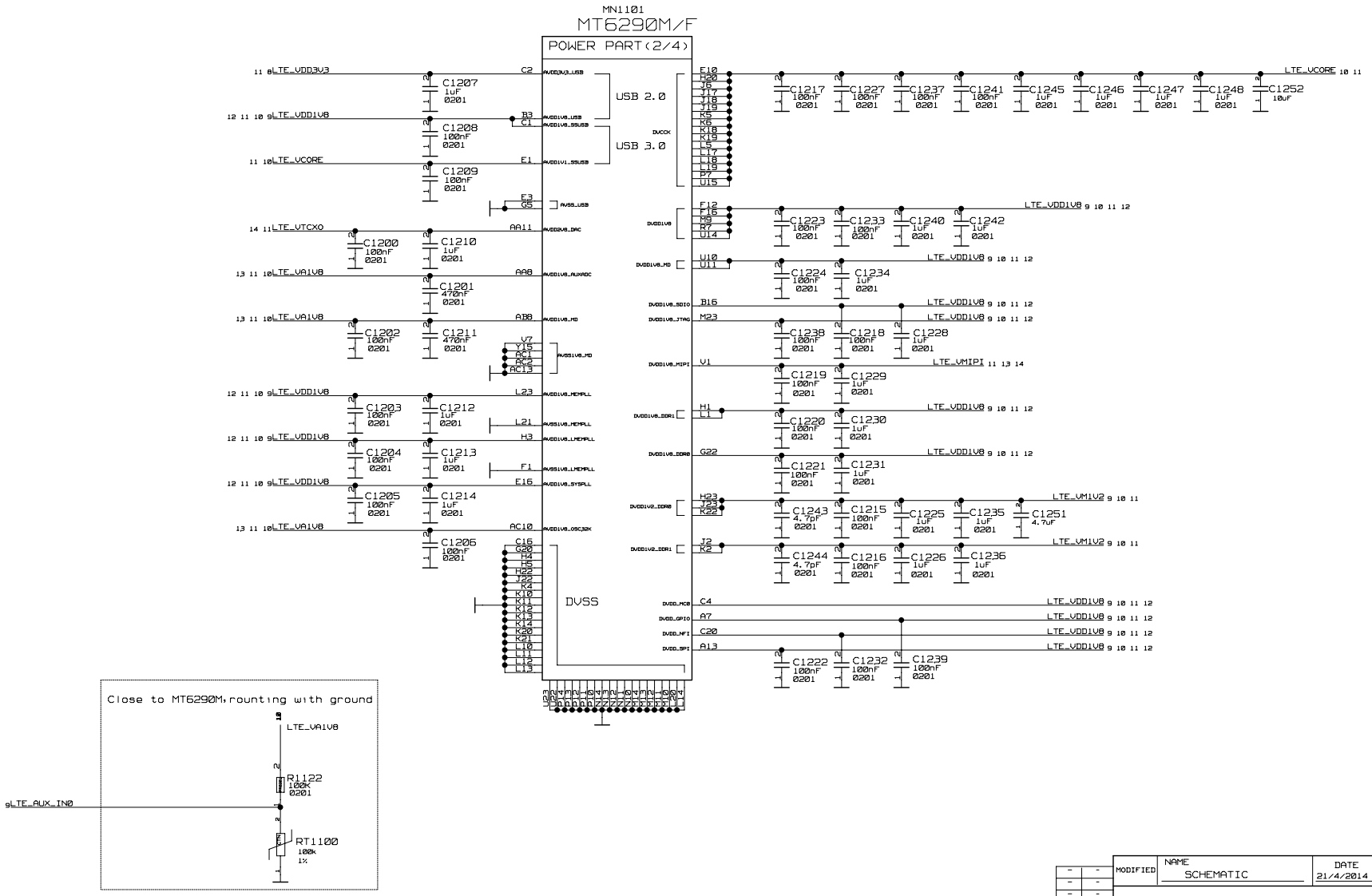

DRAWING:
BOARD MQ16 MMI V01
board mq16 mmi v01
LAST_MODIFIED=Fri Apr 25 14:36:56 2014

ALL RIGHTS RESERVED.REPRODUCTION AND DISCLOSURE PROHIBITED

MODIFIED	NAME	DATE	CHECKED	NAME	DATE
	SCHEMATIC	21/4/2014		SCHEMATIC	21/4/2014

TITLE: MT6290M
Product Name: SCHEMATIC BOARD MQ16 MMI V01

SageReal 摩爾電訊

PAGE/SHEET 10 / 19

P.N.

VER.	DATE
V00	10/4

FORMAT SIZE: A2

DOCUMENT NUMBER	TYPE	PART	VERS.

SCH DRAWING A2

	Symbol	Vout(V)	Iout (mA)	Description
Buck	VCORE	0.7~1.2	1000	Digital CORE
	VIO18	1.8	850	IO
	VRF_1V8	1.825	450	RF Chip
	VRF_1V8_2	1.825/1.2	450	RF chip/VM12
	VPA	0.5~3.4	600	Power amplifier
Analog LDO	VTCXO1	2.8V	40	26MHz refernce clock
	VTCXO2	2.8V	40	26MHz refernce clock
	VA18	1.8V	150	Analog baseband
	VUSB11	1.1V	60	SSUSB Core power
Digital LDO	VIO33	3.3V	200	Digital IO
	VIO28	1.2/1.3/1.5/1.8/2.5/2.8/3.0/3.3	200	Digital IO
	VSIM1	3.0V	50	1st SIM Card
	VSIM2	1.2/1.3/1.5/1.8/2.5/2.8/3.0/3.3	200	2nd SIM Card
	VM12	1.24	700	DRAM Power
	VMIPI	1.8	200	RFFE MIPI
	VFS	2.0	100	EFUSE power
	VMC	1.2/1.3/1.5/1.8/2.0/2.8/3.0/3.3	100	SD 2.0/3.0 memory card I/O
	VMCH	1.2/1.3/1.5/1.8/2.5/2.8/3.0/3.3	400	SD 3.0 memory card

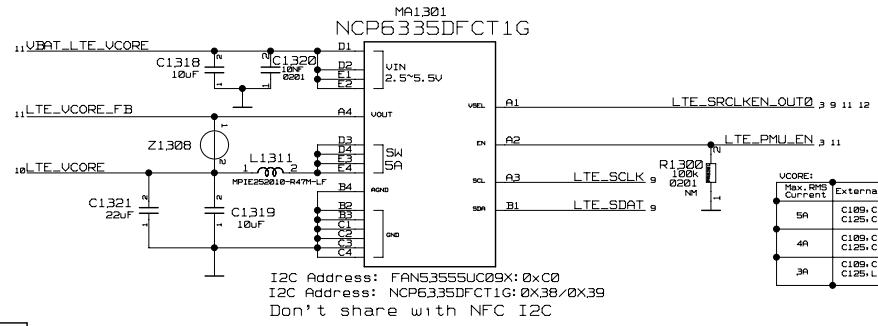

VCORE:

Max.RMS Current	External Components
5A	C109,C124,C127 C125,C126,L101
4A	C109,C124,C127 C125,C126,L101
3A	C109,C124,C127 C125,L101

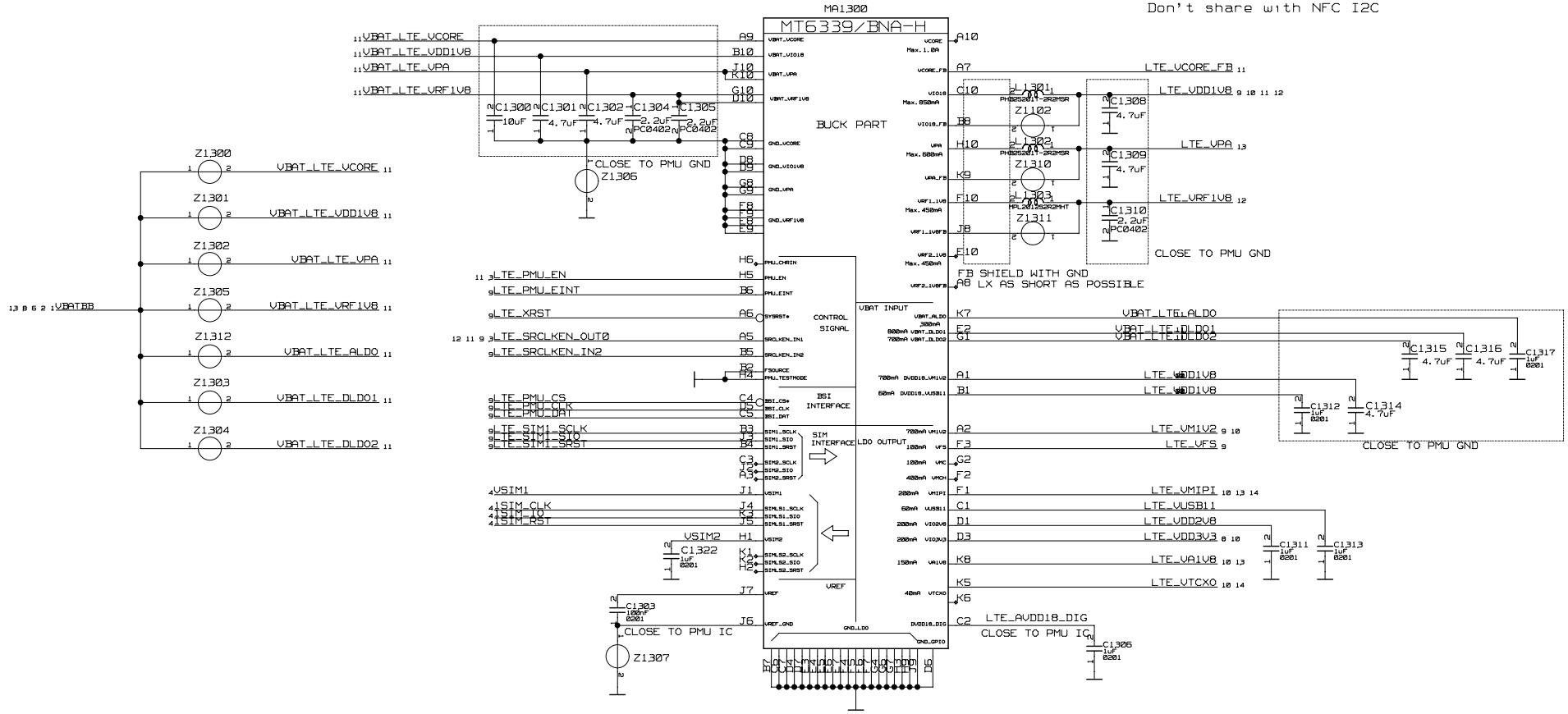

DRAWING:
BOARD MQ16 MMI V01
board mq16 mmi v01

LAST_MODIFIED=Fri Apr 25 14:36:51 2014

ALL RIGHTS RESERVED.REPRODUCTION AND DISCLOSURE PROHIBITED

	NAME	DATE		NAME	DATE
MODIFIED	SCHEMATIC	21/4/2014	CHECKED	SCHEMATIC	21/4/2014

TITLE: MT6339
Product Name: SCHEMATIC BOARD MQ16 MMI V01

SageReal 伊爱图纸

PAGE/SHEET 11 / 19

P.N.

FORMAT SIZE A2

DOCUMENT NUMBER	TYPE	PART	VERS.

VER.	DATE
V00	10/4

SCH DRAWING A2

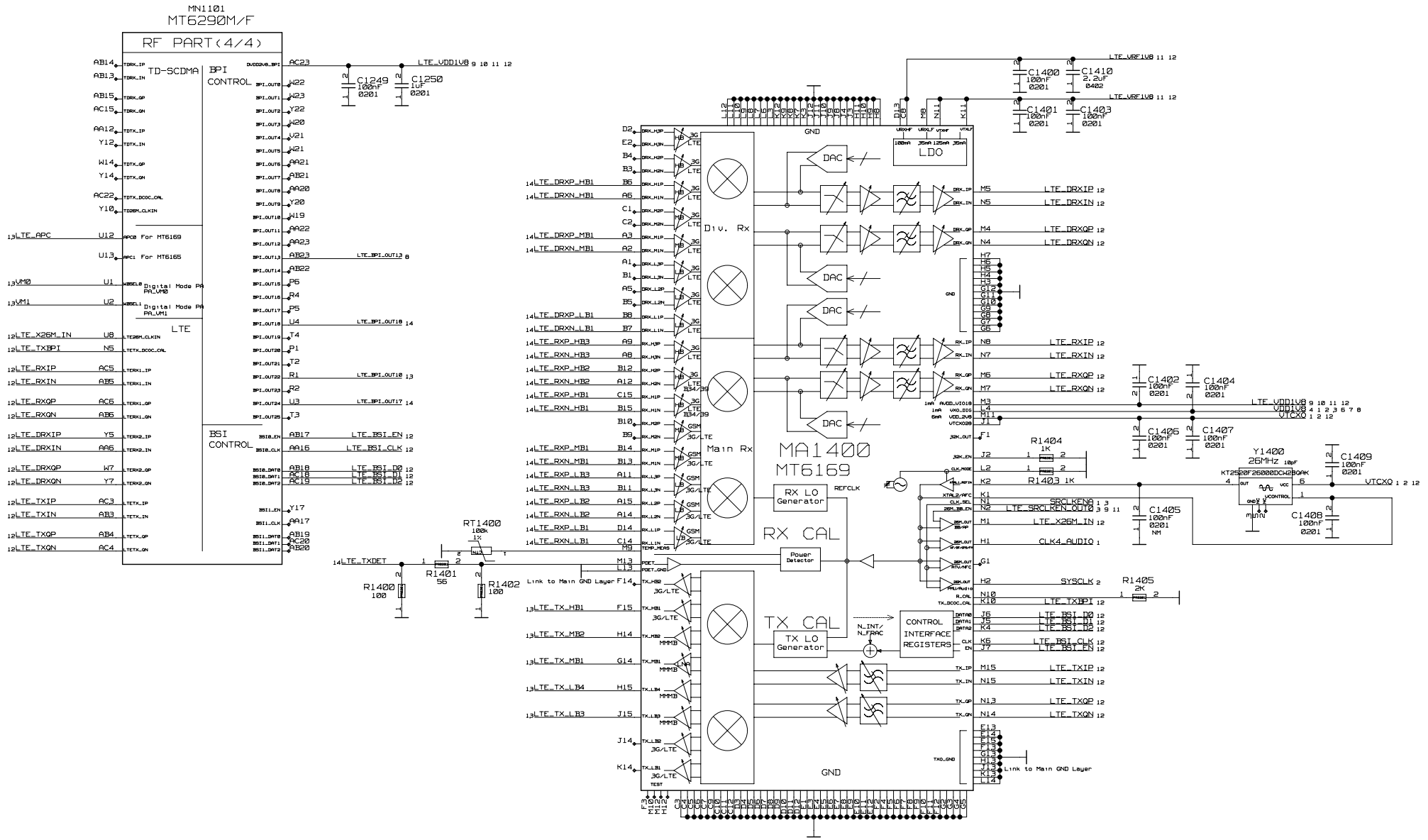

DRAWING:
BOARD MQ16 MMI V01
board mq16 mmi v01
LAST_MODIFIED=Fri Apr 25 14:36:50 2014

ALL RIGHTS RESERVED. REPRODUCTION AND DISCLOSURE PROHIBITED

VER.	DATE
V00	18/4

MODIFIED	NAME	DATE	CHECKED	NAME	DATE
	SCHEMATIC	21/4/2014		SCHEMATIC	21/4/2014

TITLE: MT6169
Product Name: SCHEMATIC BOARD MQ16 MMI V01

SageReal 伊莎图纸

PAGE/SHEET 12 / 19

P.N.

FORMAT SIZE	DOCUMENT NUMBER	TYPE	PART	VERS.
A2				

SCH DRAWING A2

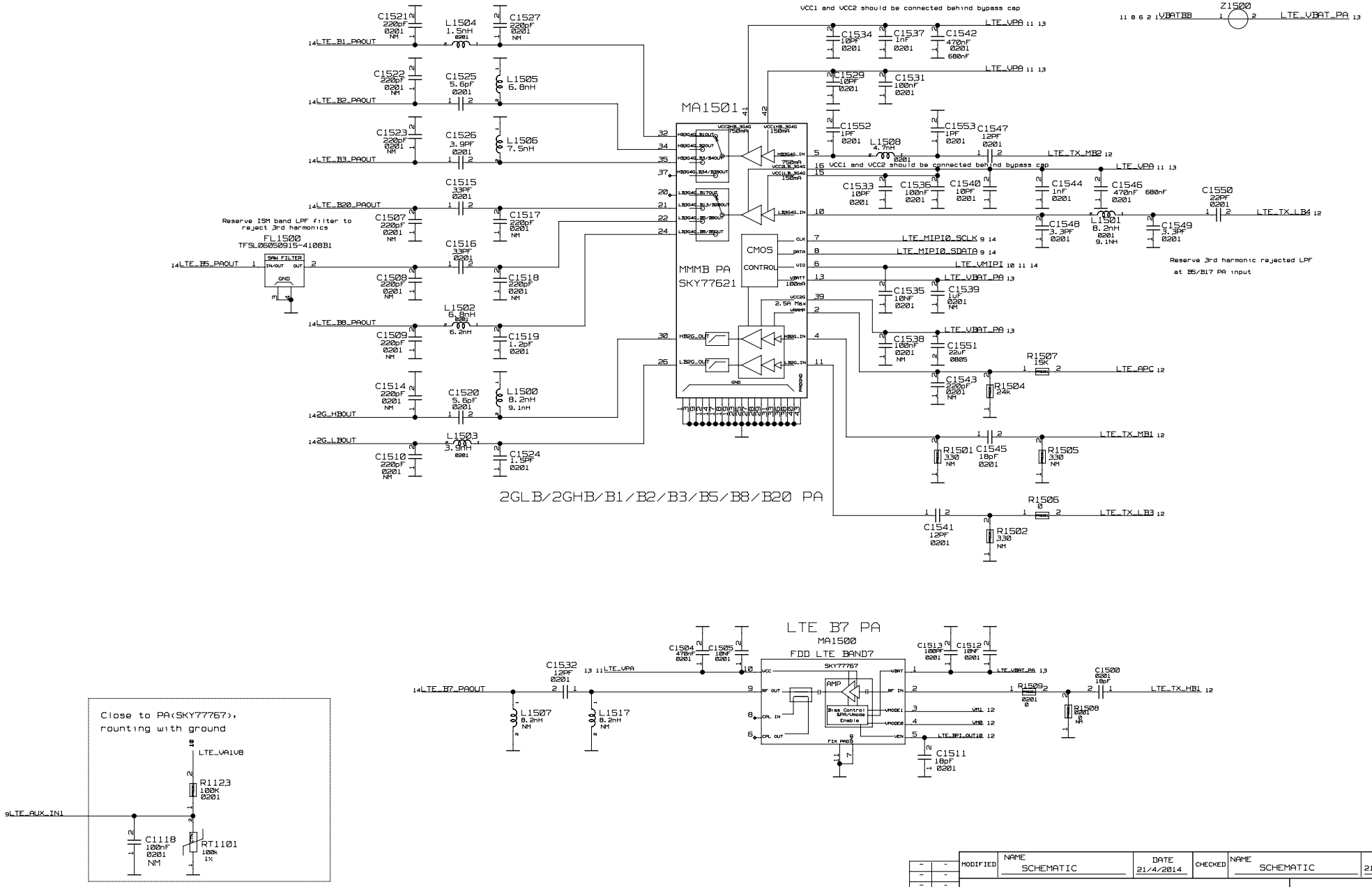

DRAWING:
BOARD MQ16 MMI V01
board mq16 mmi v01
LAST_MODIFIED=Fri Apr 25 14:36:52 2014

ALL RIGHTS RESERVED. REPRODUCTION AND DISCLOSURE PROHIBITED

MODIFIED	NAME	DATE	CHECKED	NAME	DATE
	SCHEMATIC	21/4/2014		SCHEMATIC	21/4/2014

TITLE: SKY77621&SKY77778
Product Name: SCHEMATIC BOARD MQ16 MMI V01
PAGE/SHEET: 13/19
P.N.:
FORMAT SIZE: A2
DOCUMENT NUMBER | TYPE | PART | VERS.

VER.	DATE
V00	18/4

SCH DRAWING A2

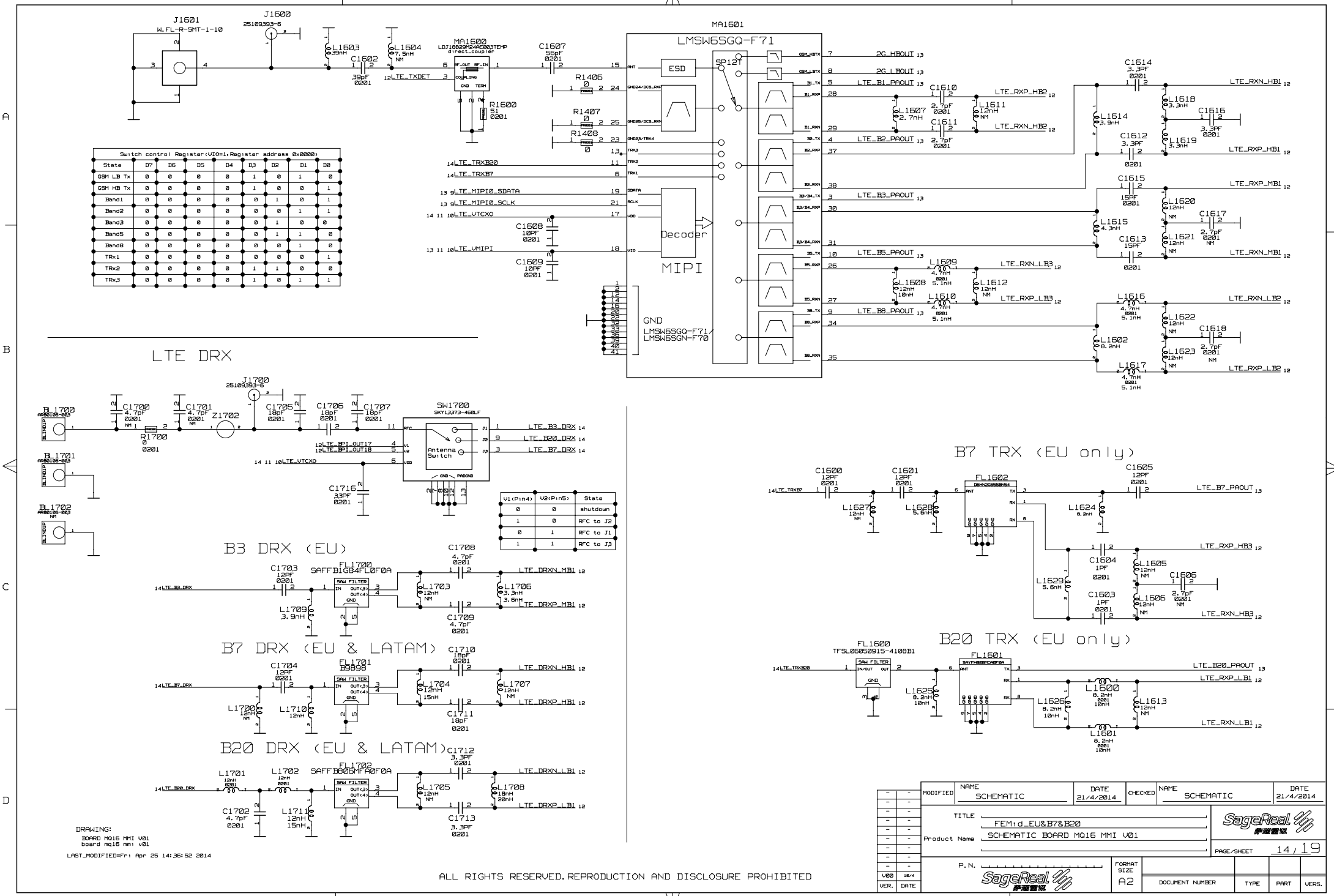
J1601
W.FL-R-SMT-1-10
J1600
25109393-6
L1603
39nH
C1602
39pF
0201
L1604
7.5nH
NM
LTE_TXDET
MA1600
LDJ1882SM24AE003TEMP
direct coupler
RF_OUT RF_IN
COUPLING
GND TERM
R1600
51
0201
C1607
56pF
0201
R1406
0
R1407
0
R1408
0
MA1601
LMSW65GQ-F71
ESD
SP12T
Decoder
MIPI
GND
LMSW65GQ-F71
LMSW65GN-F70
LTE_TRXB20
LTE_TRXB7
LTE_MIPI0_SDATA
LTE_MIPI0_SCLK
LTE_VTCXO
LTE_VMIPI
C1608
10PF
0201
C1609
10PF
0201
2G_HBOUT
2G_LBOUT
LTE_B1_PAOUT
LTE_B2_PAOUT
LTE_B3_PAOUT
LTE_B5_PAOUT
LTE_B8_PAOUT
LTE_RXP_HB2
LTE_RXN_HB2
LTE_RXN_LB3
LTE_RXP_LB3
LTE_RXP_HB1
LTE_RXN_HB1
LTE_RXP_MB1
LTE_RXN_MB1
LTE_RXN_LB2
LTE_RXP_LB2
C1610
2.7pF
0201
L1611
12nH
NM
C1611
2.7pF
0201
L1607
2.7nH
C1614
3.3PF
0201
L1618
3.3nH
C1616
3.3PF
0201
L1614
3.9nH
C1612
3.3PF
0201
L1619
3.3nH
C1615
15PF
0201
L1620
12nH
NM
C1617
2.7pF
0201
NM
L1615
4.3nH
L1621
12nH
NM
C1613
15PF
0201
L1609
4.7nH
0201
5.1nH
L1608
12nH
10nH
L1612
12nH
NM
L1610
4.7nH
0201
5.1nH
L1616
4.7nH
0201
5.1nH
L1622
12nH
NM
C1618
2.7pF
0201
NM
L1602
8.2nH
L1623
12nH
NM
L1617
4.7nH
0201
5.1nH
Switch control Register(VIO=1,Register address 0x0000)
State D7 D6 D5 D4 D3 D2 D1 D0
GSM LB Tx 0 0 0 0 1 0 1 0
GSM HB Tx 0 0 0 0 1 0 0 1
Band1 0 0 0 0 0 1 0 1
Band2 0 0 0 0 0 0 1 1
Band3 0 0 0 0 0 1 0 0
Band5 0 0 0 0 0 1 1 0
Band8 0 0 0 0 0 0 1 0
TRx1 0 0 0 0 0 0 0 1
TRx2 0 0 0 0 1 1 0 0
TRx3 0 0 0 0 1 0 1 1
LTE DRX
J1700
25109393-6
BL1700
AR00105-003
BL1701
AR00105-003
BL1702
AR00105-003
C1700
4.7pF
0201
NM
C1701
4.7pF
0201
NM
Z1702
R1700
0
0201
C1705
18pF
0201
C1706
18pF
0201
C1707
18pF
0201
SW1700
SKY13373-460LF
Antenna Switch
LTE_B3_DRX
LTE_B20_DRX
LTE_B7_DRX
LTE_BPI_OUT17
LTE_BPI_OUT18
LTE_VTCXO
C1716
33PF
0201
V1(Pin4) V2(Pin5) State
0 0 shutdown
1 0 RFC to J2
0 1 RFC to J1
1 1 RFC to J3
B3 DRX (EU)
C1703
12PF
0201
FL1700
SAFFB1G84FL0F0A
SAW FILTER
L1709
3.9nH
L1703
12nH
NM
C1708
4.7pF
0201
L1706
3.3nH
3.6nH
C1709
4.7pF
0201
LTE_DRXN_MB1
LTE_DRXP_MB1
B7 DRX (EU & LATAM)
C1704
12PF
0201
FL1701
B3898
L1700
12nH
NM
L1710
12nH
L1704
12nH
15nH
C1710
18pF
0201
L1707
12nH
NM
C1711
18pF
0201
LTE_DRXN_HB1
LTE_DRXP_HB1
B20 DRX (EU & LATAM)
L1701
12nH
0201
L1702
12nH
0201
FL1702
SAFFB806MFA0F0A
C1702
4.7pF
0201
L1711
12nH
15nH
L1705
12nH
NM
C1712
3.3PF
0201
L1708
18nH
20nH
C1713
3.3PF
0201
LTE_DRXN_LB1
LTE_DRXP_LB1
B7 TRX (EU only)
C1500
12PF
0201
C1501
12PF
0201
FL1602
DSHN2G055B454
L1627
12nH
NM
L1628
5.6nH
C1605
12PF
0201
L1624
8.2nH
LTE_B7_PAOUT
LTE_RXP_HB3
LTE_RXN_HB3
C1604
1PF
0201
L1629
5.6nH
C1503
1PF
0201
L1605
12nH
NM
L1606
12nH
NM
C1506
2.7pF
0201
NM
B20 TRX (EU only)
FL1600
TFSL06050915-4108B1
SAW FILTER
FL1601
SAFTB882MC2A0F0A
L1625
8.2nH
10nH
L1600
8.2nH
0201
10nH
L1626
8.2nH
10nH
L1613
12nH
NM
L1601
8.2nH
0201
10nH
LTE_B20_PAOUT
LTE_RXP_LB1
LTE_RXN_LB1
DRAWING:
BOARD MQ16 MMI V01
board mq16 mmi v01
LAST_MODIFIED=Fri Apr 25 14:36:52 2014
ALL RIGHTS RESERVED.REPRODUCTION AND DISCLOSURE PROHIBITED
MODIFIED
NAME
SCHEMATIC
DATE
21/4/2014
CHECKED
NAME
SCHEMATIC
DATE
21/4/2014
TITLE
FEMid_EU&B7&B20
Product Name
SCHEMATIC BOARD MQ16 MMI V01
SageReal
PAGE/SHEET
14 / 19
P.N.
FORMAT SIZE
A2
DOCUMENT NUMBER
TYPE
PART
VERS.
V00 10/4
VER. DATE
SCH DRAWING A2

Title: Basenet Report
Design: mq16_mmi_v01
Date: Apr 25 14:37:21 2014

Base nets and synonyms for
mq16_lib.MQ16_MMI_V01(@mq16_lib.mq16_mmi_v01(sch_1))

Base Signal	Location([Zone][dir])
1SIM_CLK	4A2 11C3
1SIM_IO	4A1 11C3
1SIM_RST	4A2 11C3
2G_HBOUT	13B3 14A2
2G_LBOUT	13B3 14A2
A0	4A3 4A4
A1	4A3 4A4
A2	4A3 4A4
A3	4A3 4A4
A4	4A3 4A4
A5	4A3 4A4
A6	4A3 4A4
A7	4A3 4B4
A8	4A3 4B4
A9	4A3 4B4
ACCDET	2C4
AP_PCM_CK	3C1 9B1
AP_PCM_FSYNC	3C1 9B1
AP_PCM_RX	3C1 9B1
AP_PCM_TX	3C1 9B1
AP_WAKED_INT	3C1 9B3
AUD_CLK	2B3 3C1
AUD_MISO	2B3 3C1
AUD_MOSI	2B3 3C1
AUXADC_REF	1C2
AVDD	1B2 2C3
AVDD18_GPS	5B2 5B3
AVDD18_WBG	5A2 5C1
AVDD18_WFBT	5A2 5B2
BATSNS	1C3 1C3 3D3
CAMMCLK	6C2 3B3 6B1 6B2
CAMPDNB	3A1 6B1
CAMPDNF	6C2 3A1 6B3
CAMRST	3A1 6B1
CAMRSTF	6C2 3A1 6B2
CAM_SCLK	6C2 3B3 3D4 6B1 6B3 8B1
CAM_SDAT	6C2 3B3 3D4 6B1 6B3 8B1
CHG1V1_DM	1C3 3A2
CHG1V1_DP	1C3 3A2
CHG_LDO	1C3 1C3
CLK4_AUDIO	1B3 12C2
CLK32K	1C2 3C1
CONN_RSTB	5B3 5C2
CONN_SCLK	5B3 5C2
CONN_SDATA	5B3 5C2
CONN_SEN	5B3 5C2
CONN_XOIN	5B3 5C2
CTOUCH_SHDN	7C4 3A1 7C4
CTP_SCLK	7D4 3B2 7C4
CTP_SDAT	7D4 3B2 7C4
D0	4A3 4A4
D1	4A3 4A4
D2	4A3 4A4
D3	4A3 4A4
D4	4A3 4A4
D5	4A3 4A4
D6	4A3 4A4
D7	4A3 4A4
D8	4A4 4B3
D9	4A4 4B3
D10	4A4 4B3
D11	4A4 4B3
D12	4A4 4B3
D13	4A4 4B3
D14	4B3 4B4
D15	4B3 4B4
D16	4B3 4B4
D17	4B3 4B4
D18	4B3 4B4
D19	4B3 4B4
D20	4B3 4B4
D21	4B3 4B4
D22	4B3 4B4
D23	4B3 4B4
D24	4B3 4B4
D25	4B3 4B4
D26	4B3 4B4
D27	4B3 4B4
D28	4B3 4B4
D29	4B3 4B4
D30	4B3 4B4
D31	4B3 4B4
DQM0	4B4 4C3
DQM1	4B4 4C3
DQM2	4B4 4C3
DQM3	4B4 4C3
DQS0	4B3 4B4
DQS0*	4B3 4B4
DQS1	4B3 4B4
DQS1*	4B4 4C3
DQS2	4B4 4C3
DQS2*	4B4 4C3
DQS3	4B4 4C3
DQS3*	4B4 4C3
DVDD12_EMI	2A1 4A2 4C4
	2A1 1B2
DVDD18_EMI	4A2
	4A2 1B2 1B3 2A3 2A3 2A3
	2B2 2B3 2B3 2B3 2B3 2B3
	3B3 3B3 3B3 3B4 3B4 3D3
	4B2 6B4 7A1 7A1 7A2 7A2
	7A2 7A4 7B1 7B4 7C2 8A3
	8B1 12B1
EARBIASN	2D4
ECKE	4B3 4B4
ECS0*	4B3 4B4
ECS1*	4B3 4B4
ED_CLK	4B3 4B4
ED_CLK*	4B3 4B4
EINT_CTP	7D4 3A1 7C4
EINT_G	3A1 7A1
EINT_HALL	3A1 3B4
EINT_HEADSET	3A1 8A3
EINT_HEADSET1	8A2 8B3
EINT_MS	3A1 7B1
EINT_PMU	1B3 3A1
EINT_PS	3A1 7A4
EINT_RST_LTE	3A1 9B3
EINT_SDIO_LTE	3A1 9C2
EINT_SWCHG	3A1 3D3
EMMC_CLK	3B2 4B3
EMMC_CMD	3B2 4B3
EMMC_DAT0	3B2 4B3
EMMC_DAT1	3B2 4B3
EMMC_DAT2	3B2 4B3
EMMC_DAT3	3B2 4B3
EMMC_DAT4	3B2 4B3
EMMC_DAT5	3B2 4B3
EMMC_DAT6	3B2 4B3
EMMC_DAT7	3B2 4B3
EMMC_RST	3B2 4B3
EN_CHG	3A1 3D4
EN_CMLIGHT	3C2 6D2
EN_LCD_BL	3A2 6D4
EN_LEDB	1B2 6D3
EN_LEDG	1B2 6D3
EN_LEDR	1A2 6D3
EN_TORCH	3C2 6D2
EVREF	4B4 4C2 4C4
FCHR_EN	1B2 8D3
FLASHN	6D1
FLASHP	6C1
FM_ANT	5B2 8B3
FM_ANT_GND	5B2 8B3
FM_CLK	5B1 5B2
FM_DATA	5B1 5B2
GND_AUXADC	1C2
GND_VPROC_FB	1A2 2B1
GPS_LNA_EN	5A3 5C2
GPS_RFIN	5A3 5C3
GPS_RXIN	5B1 5C3
GPS_RXIP	5B1 5C3
GPS_RXQN	5C1 5C3
GPS_RXQP	5B1 5C3
HSMIC	8A4 8B3
	2C4 8A4
HSPKL	8A3 8B1 8B2
HSPKR	8A3 8B1 8B2
ISENSE	1C3 1C3 3C3
KCOL0	3C2 8C4 8C4 8D3
KEYPAD_LED	1A2 8C4 8C4
LCD_ID	3A2 6B4
LCD_RSTB	3A3 6B4
LEDN	6B4 6D3
LEDP	6C3 6C4
LOUDSPKN0	2D3 8C3
LOUDSPKN1	8B1 8B4 8C2 8C4
LOUDSPKP0	2D3 8C3
LOUDSPKP1	8B1 8B4 8C2 8C4
LPTE	3A3 6B4
LTE_0V6_LPDDR2	9A1
LTE_32KIN	2B3 9D2
LTE_AGPS_OUT	3A1 9B1
LTE_APC	12B4 13B1
LTE_AP_RST	3B1 9B3
LTE_AUX_IN0	9B2 10D4
LTE_AUX_IN1	9B2 13D4
LTE_AVDD18_DIG	11C2
LTE_B1_PAOUT	13A3 14A2
LTE_B2_PAOUT	13A3 14A2
LTE_B3_DRX	14B3 14C4
LTE_B3_PAOUT	13A3 14A2
LTE_B5_PAOUT	13B4 14B2
LTE_B7_DRX	14B3 14C4
LTE_B7_PAOUT	13C3 14C1
LTE_B8_PAOUT	13B3 14B2
LTE_B20_DRX	14B3 14D4
LTE_B20_PAOUT	13A3 14C1
LTE_BPI_OUT10	12B3 13C2
LTE_BPI_OUT13	8C4 12B3
LTE_BPI_OUT17	12B3 14B4
LTE_BPI_OUT18	12B3 14B4
LTE_BSI_CLK	12B3 12C2
LTE_BSI_D0	12B3 12C2
LTE_BSI_D1	12B3 12C2
LTE_BSI_D2	12B3 12C2
LTE_BSI_EN	12B3 12C2
LTE_CVJTCK	9A3 9C3
LTE_CVJTMS	9A3 9C3
LTE_DRXIN	12A2 12B4
LTE_DRXIP	12A2 12B4
LTE_DRXN_HB1	12A3 14C3
LTE_DRXN_LB1	12B3 14D3
LTE_DRXN_MB1	12B3 14C3
LTE_DRXP_HB1	12A3 14D3
LTE_DRXP_LB1	12B3 14D3
LTE_DRXP_MB1	12B3 14C3
LTE_DRXQN	12B2 12B4
LTE_DRXQP	12B2 12B4
LTE_JTCK	9A4 9C3
LTE_JTDI	9A4 9C3
LTE_JTMS	9A4 9C3
LTE_JTRST	9A4 9C3
LTE_MDUART_RXD	9B4 9C3
LTE_MDUART_TXD	9B4 9C3
LTE_MIPI0_SCLK	9C2 13B2 14A3
LTE_MIPI0_SDATA	9C2 13B2 14A3
LTE_PMU_CLK	9B3 11C3
LTE_PMU_CS	9B3 11C3
LTE_PMU_DAT	9B3 11C3
LTE_PMU_EINT	9B3 11B3
LTE_PMU_EN	3B1 11A1 11B3
LTE_RXIN	12B2 12B4
LTE_RXIP	12B2 12B4
LTE_RXN_HB1	12B3 14A1
LTE_RXN_HB2	12B3 14A1
LTE_RXN_HB3	12B3 14C1
LTE_RXN_LB1	12C3 14D1
LTE_RXN_LB2	12C3 14B1
LTE_RXN_LB3	12C3 14B1
LTE_RXN_MB1	12B3 14B1
LTE_RXP_HB1	12B3 14A1
LTE_RXP_HB2	12B3 14A1
LTE_RXP_HB3	12B3 14C1
LTE_RXP_LB1	12C3 14C1
LTE_RXP_LB2	12C3 14B1
LTE_RXP_LB3	12B3 14B1
LTE_RXP_MB1	12B3 14A1
LTE_RXQN	12B2 12B4
LTE_RXQP	12B2 12B4
LTE_SBJTCK	9A4 9C3
LTE_SBJTMS	9A4 9C3
LTE_SCLK	9C2 11A1
LTE_SDAT	9C2 11A1
LTE_SIM1_SCLK	9B2 11C3
LTE_SIM1_SIO	9B2 11C3
LTE_SIM1_SRST	9B2 11C3
LTE_SRCLKEN_IN2	9B2 11C3
LTE_SRCLKEN_OUT0	3B1 9C3 11A1 11C3 12C2
LTE_SUART0_CTS	9A4 9C3
LTE_SUART0_RXD	9A4 9C3
LTE_SUART1_RXD	3B1 9B4 9C3
LTE_SUART1_TXD	3B1 9C3
LTE_TRXB7	14A3 14C2
LTE_TRXB20	14A3 14C2
LTE_TXBPI	12B4 12C2
LTE_TXDET	12C3 14A3
LTE_TXIN	12C2 12C4
LTE_TXIP	12C2 12C4
LTE_TXQN	12C2 12C4
LTE_TXQP	12C2 12C4
LTE_TX_HB1	12C3 13C1
LTE_TX_LB3	12C3 13C1
LTE_TX_LB4	12C3 13A1
LTE_TX_MB1	12C3 13B1
LTE_TX_MB2	12C3 13A1
LTE_VA1V8	10B4 10B4 10C4 10C4 11C2
	13C4
LTE_VBAT_PA	13A1 13B2 13B2 13C2
LTE_VCORE	10A1 10B4 11A2
LTE_VCORE_FB	11A2 11B2
LTE_VDD1V8	9A4 9A4 9A4 9B3 9B4 9C2
	9C3 10A4 10B2 10B2 10B2
	10B2 10B2 10B4 10B4 10C2
	10C2 10C2 10C2 10C2 10C4
	11B2 11C2 11C2 12A3 12B1
LTE_VDD2V8	11C2
LTE_VDD3V3	8B4 10A4 11C2
LTE_VFS	9C4 11C2
LTE_VM1V2	9A2 10C2 10C2 11C2
LTE_VMIPI	10B2 11C2 13B2 14B3
LTE_VPA	11B2 13A1 13A2 13A2 13C3
LTE_VRF1V8	11B2 12A1 12A1
LTE_VTCXO	10B4 11C2 14A3 14B4
LTE_VUSB11	11C2
LTE_X26M_IN	12B4 12C2
LTE_XRST	9B4 11B3
MC2CK	3B2 9C2
MC2CM	3B2 9C2
MC2DA0	3B2 9C2
MC2DA1	3B2 9C2
MC2DA2	3B2 9C2
MC2DA3	3B2 9C2
MICBIASP	2B4 8B4 8C1 8C4
MICN0	2C4 8A2
MICN0F	8A1 8B4 8C4
MICN1	2D4 8A4
MICN2	2C4 8C2
MICN21	8C1
MICP0	2C4 8A2
MICP0F	8A1 8B4 8C4
MICP2	2C4 8C2
MICP21	8C1
MIPI_RCN	3A4 6B2
MIPI_RCN_A	6B2 3B3 6A3
MIPI_RCP	3A4 6B2
MIPI_RCP_A	6B2 3A3 6A3
MIPI_RDN0	3A4 6B2
MIPI_RDN0_A	6B2 3A3 6A3
MIPI_RDN1	3A4 6B2
MIPI_RDN1_A	6B2 3A3 6A3
MIPI_RDN2	3A4 6A2
MIPI_RDN3	3A4 6A2
MIPI_RDP0	3A4 6B2
MIPI_RDP0_A	6B2 3A3 6A3
MIPI_RDP1	3A4 6B2
MIPI_RDP1_A	6B2 3A3 6A3
MIPI_RDP2	3A4 6A2
MIPI_RDP3	3A4 6A2

ALL RIGHTS RESERVED. REPRODUCTION AND DISCLOSURE PROHIBITED

MODIFIED	NAME	DATE	CHECKED	NAME	DATE
	SCHEMATIC	21/4/2014		SCHEMATIC	21/4/2014

TITLE
Product Name SCHEMATIC BOARD MQ16 MMI V01

SageReal 伊達圖紙

PAGE/SHEET 15 / 19

P.N.

SageReal 伊達圖紙

VER.	DATE	FORMAT SIZE	DOCUMENT NUMBER	TYPE	PART	VERS.
		A2				

SCH DRAWING A2

MIPI_TCN	3A4 6B4
MIPI_TCP	3A4 6B4
MIPI_TDN0	3A4 6A4
MIPI_TDN1	3B4 6B4
MIPI_TDP0	3A4 6B4
MIPI_TDP1	3B4 6B4
MP3_OUTL	2C3 8A3 8B2
MP3_OUTR	2C3 8A3 8B2
PMU_SPI_CS	1B3 3A1
PMU_SPI_MISO	1B3 3A1
PMU_SPI_MOSI	1B3 3B1
PMU_SPI_SCK	1B3 3A1
PWRKEY	1B3 8C3
RECN0	2D3 8D4
RECP0	2C3 8D4
SD_CLK	3B2 4C1
SD_CMD	3B2 4C1
SD_DAT0	3B2 4C1
SD_DAT1	3B2 4C1
SD_DAT2	3B2 4C1
SD_DAT3	3B2 4C1
SENSE_SCLK	3B2 7A1 7A4 7C1
SENSE_SDAT	3B2 7A1 7A4 7C1
SRCLKENA	1B3 3B1 12C2
SYSCLK	2B4 12C2
SYSRST*	1B3 3B1
TREF	1C1 1C3 1C4
URXD0	3B1
USB_DM	3A2 8C4 8D4
USB_DP	3A2 8C4 8D4
USB_DRV	3C2 3D4
USB_ID	3A1 8C4
UTXD0	3B1
VBATBB	1B4 1C4 2C3 6C2 6C4 6D3 8B1 8C4 11B4 13A1
VBAT_LDO51	1A3 1C3
VBAT_LDO52	1A3 1B3
VBAT_LDO53	1A3 1B3
VBAT_LTE_ALDO	11B2 11C4
VBAT_LTE_DLDO1	11B2 11C4
VBAT_LTE_DLDO2	11C2 11C4
VBAT_LTE_VCORE	11A2 11B4 11B4
VBAT_LTE_VDD1V8	11B4 11B4
VBAT_LTE_VPA	11B4 11B4
VBAT_LTE_VRF1V8	11B4 11B4
VBAT_VCORE	1A3 1B3
VBAT_VPA	1A3 1B3
VBAT_VSYS	1A3 1B3
VCAMA	6C2 1B1 6A1 6A2
VCAMD	6B2 1B2 6A1 6B2
VCAMIO	6C2 1B2 6A1 6B2
VCAM_AF	1B2 6A1
VCDT	1C3 1C3
VCHG	1C4 3C4 8B4 8D4
VCHGIN	1C4 3C2
VCONN_1V8	1B2 5A2
VCONN_2V8	1B2 5A3 5B2 5B4
VCONN_3V3	1B1 5B2
VDD2V8	1B2 6B4 7A3 7B2
VEMMC_3V3	1B2 4B2
VGP1_2V8	7D4 1C2 7C4
VIB	1B2 8C4 8C4
VM0	12B4 13C2
VM1	12B4 13C2
VMC	1B2 2B3
VMCH	1B2 4C1
VPROC	1A1 2A1 2B1
VPROC_FB	1A2 2B1
VREG	3C4 3D4
VRTC	1B1
VSIM1	4A2 11C3
VSIM2	11C3
VSYS	1A1 1B3
VTCXO	1B2 2A3 12B1 12B1
VUSB	1C2 2B3
WATCHDOG*	1B3 4B4
WB_CTRL0	5B2 5C2
WB_CTRL1	5B2 5C2
WB_CTRL2	5B2 5C2
WB_CTRL3	5C2 5C2
WB_CTRL4	5C2 5C2
WB_CTRL5	5C2 5C2
WB_RXIN	5B2 5C2
WB_RXIP	5B2 5C2
WB_RXQN	5B2 5C2

WB_RXQP	5B2 5C2
WB_TXIN	5B2 5C2
WB_TXIP	5B2 5C2
WB_TXQN	5B2 5C2
WB_TXQP	5B2 5C2
WFBT_ANT	5A4 5C4
WIFI_LTE_CO_EXIST	5C2 9B3

ALL RIGHTS RESERVED. REPRODUCTION AND DISCLOSURE PROHIBITED

MODIFIED	NAME	DATE	CHECKED	NAME	DATE
	SCHEMATIC	21/4/2014		SCHEMATIC	21/4/2014

TITLE

Product Name SCHEMATIC BOARD MQ16 MMI V01

SageReal 伊瑞科技

PAGE/SHEET 15 / 19

P.N.

SageReal 伊瑞科技

FORMAT SIZE A2

VER.	DATE	DOCUMENT NUMBER	TYPE	PART	VERS.

SCH DRAWING A2

Title: Cref Part Report
Design: mq16_mmi_v01
Date: Apr 25 14:37:21 2014

BL103	BLIND1P	[1B1]
BL700	BLIND1P	[5A4]
BL701	BLIND1P	[5A4]
BL1000	BLIND1P	[8D3]
BL1001	BLIND1P	[8D3]
BL1700	BLIND1P	[14B4]
BL1701	BLIND1P	[14C4]
BL1702	BLIND1P	[14C4]
BT100	BATTERIE	[1B1]
C100	PC0603X5R	[1D4]
C101	PC0402	[1C4]
C103	PC0201	[1D4]
C104	PC0201	[1D4]
C106	PC0603X5R	[1A3]
C107	PC0201	[1B1]
C108	PC0201	[1C3]
C109	PC0603X5R	[1A3]
C110	PC0201	[1A2]
C111	PC0201	[1A3]
C112	PC0201	[1A3]
C113	PC0603X5R	[1B3]
C114	PC0603X5R	[1B3]
C115	PC0201	[1B3]
C116	PC0201	[1B3]
C117	PC0201	[1A2]
C119	PC0201	[1C2]
C122	PC0201	[1C1]
C123	PC0201	[1C1]
C135	PC0201	[1B2]
C136	PC0402	[1B1]
C137	PC0603X5R	[1A3]
C140	PC0402	[1B2]
C200	PC0201	[2C3]
C201	PC0201	[2B4]
C202	PC0201	[2C4]
C203	PC0201	[2C4]
C204	PC0201	[2C4]
C205	PC0201	[2D4]
C207	PC0402	[2C3]
C209	PC0201	[2D3]
C210	PC0201	[2D3]
C212	PC0201	[2C3]
C213	PC0201	[2C3]
C214	PC0201	[2D3]
C215	PC0201	[2C4]
C216	PC0201	[2C4]
C220	PC0201	[2A3]
C221	PC0201	[2B3]
C222	PC0201	[2B3]
C223	PC0201	[2A3]
C224	PC0201	[2A3]
C225	PC0201	[2B3]
C226	PC0201	[2B3]
C227	PC0201	[2B3]
C228	PC0201	[2B3]
C229	PC0201	[2B3]
C230	PC0201	[2B3]
C231	PC0201	[2B2]
C232	PC0201	[2B2]
C233	PC0201	[2B2]
C234	PC0201	[2B2]
C235	PC0201	[2B2]
C236	PC0201	[2B2]
C237	PC0201	[2B2]
C238	PC0201	[2B2]
C239	PC0201	[2B2]
C240	PC0603X5R	[2B1]
C241	PC0603X5R	[2B1]
C242	PC0603X5R	[2B1]
C243	PC0201	[2A2]
C244	PC0201	[2A2]
C245	PC0201	[2A2]
C246	PC0201	[2A2]
C247	PC0201	[2A2]
C248	PC0603X5R	[2A1]
C249	PC0603X5R	[2A1]
C250	PC0201	[2A2]
C251	PC0201	[2A2]
C252	PC0201	[2A2]
C253	PC0201	[2A2]
C254	PC0603X5R	[2A2]
C268	PC0201	[2C3]
C269	PC0201	[2C3]
C300	PC0201	[3A2]
C301	PC0201	[3B1]
C302	PC0201	[3B4]
C303	PC0201	[3B4]
C305	PC0201	[3C4]
C307	PC0603X5R	[3C3]
C309	PC0201	[3C3]
C310	PC0201	[3D3]
C311	PC0201	[3D3]
C312	PC0201	[3C4]
C400	PC0402	[4A2]
C401	PC0201	[4A3]
C402	PC0201	[4B2]
C405	PC0201	[4A1]
C406	PC0201	[4A1]
C407	PC0201	[4A1]
C409	PC0201	[4A1]
C413	PC0201	[4A1]
C415	PC0402	[4C1]
C416	PC0402	[4A3]
C417	PC0402	[4A2]
C418	PC0201	[4A2]
C419	PC0201	[4A2]
C420	PC0201	[4A2]
C421	PC0201	[4A2]
C422	PC0603X5R	[4B2]
C423	PC0201	[4B3]
C424	PC0201	[4B2]
C425	PC0402	[4B2]
C426	PC0201	[4B2]
C427	PC0603X5R	[4C3]
C428	PC0201	[4C3]
C429	PC0201	[4C4]
C430	PC0201	[4C4]
C431	PC0201	[4C4]
C610	PC0201	[2A3]
C703	PC0201	[5C3]
C705	PC0201	[5A4]
C706	PC0201	[5B2]
C707	PC0201	[5B3]
C708	PC0201	[5B3]
C709	PC0201	[5C3]
C711	PC0201	[5B2]
C713	PC0201	[5A4]
C715	PC0201	[5A4]
C716	PC0201	[5A3]
C717	PC0201	[5B3]
C718	PC0201	[5B2]
C719	PC0201	[5B3]
C720	PC0402	[5B2]
C722	PC0201	[5C1]
C723	PC0201	[5B1]
C725	PC0201	[7C4]
C730	PC0201	[5B4]
C733	PC0201	[5A3]
C759	PC0201	[5A3]
C800	PC0603X5R	[6A2]
C801	PC0201	[6B1]
C802	PC0201	[6B1]
C803	PC0201	[6B2]
C804	PC0402	[6B1]
C805	PC0603X5R	[6B1]
C807	PC0402	[6A1]
C808	PC0201	[6C4]
C809	PC0201	[6B4]
C811	PC0201	[6B4]
C812	PC0201	[6B4]
C814	PC0603X5R	[6C4]
C818	PC0201	[6B1]
C819	PC0201	[6C3]
C822	PC0603X5R	[6C3]
C823	PC0402	[6A1]
C825	PC0603X5R	[6C2]
C826	PC0201	[6C2]
C827	PC0201	[6C1]
C828	PC0402	[6C1]
C904	PC0201	[7A2]
C905	PC0201	[7A2]
C906	PC0201	[7A1]
C907	PC0201	[7B2]
C908	PC0603X5R	[7C1]
C910	PC0201	[7A3]
C911	PC0201	[7C2]
C917	PC0201	[7A4]
C1000	PC0201	[8D3]
C1001	PC0201	[8D3]
C1002	PC0201	[8D3]
C1003	PC0201	[8A4]
C1004	PC0201	[8A4]
C1005	PC0402	[8B2]
C1006	PC0201	[8B2]
C1007	PC0402	[8B2]
C1008	PC0402	[8B2]
C1009	PC0201	[8B2]
C1010	PC0201	[8A4]
C1011	PC0603X5R	[8A3]
C1012	PC0603X5R	[8A3]
C1013	PC0603X5R	[8A4]
C1014	PC0201	[8B2]
C1015	PC0201	[8B2]
C1016	PC0201	[8A3]
C1017	PC0201	[8B2]
C1018	PC0201	[8A3]
C1019	PC0201	[8A1]
C1020	PC0201	[8B4]
C1021	PC0201	[8A1]
C1022	PC0201	[8A1]
C1023	PC0201	[8A1]
C1024	PC0201	[8B1]
C1030	PC0201	[8C4]
C1031	PC0201	[8C2]
C1032	PC0201	[8C4]
C1033	PC0201	[8C1]
C1034	PC0201	[8C1]
C1035	PC0603X5R	[8C1]
C1046	PC0603X5R	[8B1]
C1100	PC0201	[9B3]
C1114	PC0201	[9C3]
C1118	PC0201	[13D4]
C1122	PC0201	[9A2]
C1124	PC0201	[9A2]
C1125	PC0201	[9A2]
C1126	PC0201	[9A2]
C1127	PC0201	[9A2]
C1200	PC0201	[10B3]
C1201	PC0201	[10B3]
C1202	PC0201	[10B3]
C1203	PC0201	[10B3]
C1204	PC0201	[10C3]
C1205	PC0201	[10C3]
C1206	PC0201	[10C3]
C1207	PC0201	[10A3]
C1208	PC0201	[10A3]
C1209	PC0201	[10B3]
C1210	PC0201	[10B3]
C1211	PC0201	[10B3]
C1212	PC0201	[10B3]
C1213	PC0201	[10C3]
C1214	PC0201	[10C3]
C1215	PC0201	[10C2]
C1216	PC0201	[10C2]
C1217	PC0201	[10A3]
C1218	PC0201	[10B2]
C1219	PC0201	[10B3]
C1220	PC0201	[10B3]
C1221	PC0201	[10C3]
C1222	PC0201	[10C3]
C1223	PC0201	[10B3]
C1224	PC0201	[10B3]
C1225	PC0201	[10C2]
C1226	PC0201	[10C2]
C1227	PC0201	[10A2]
C1228	PC0201	[10B2]
C1229	PC0201	[10B2]
C1230	PC0201	[10B2]
C1231	PC0201	[10C2]
C1232	PC0201	[10C2]
C1233	PC0201	[10B2]
C1234	PC0201	[10B2]
C1235	PC0201	[10C2]
C1236	PC0201	[10C2]
C1237	PC0201	[10A2]
C1238	PC0201	[10B3]
C1239	PC0201	[10C2]
C1240	PC0201	[10B2]
C1241	PC0201	[10A2]
C1242	PC0201	[10B2]
C1243	PC0201	[10C3]
C1244	PC0201	[10C3]
C1245	PC0201	[10A2]
C1246	PC0201	[10A2]
C1247	PC0201	[10A2]
C1248	PC0201	[10A2]
C1249	PC0201	[12A3]
C1250	PC0201	[12A3]
C1251	PC0603X5R	[10C2]
C1252	PC0603X5R	[10A1]
C1300	PC0603X5R	[11B3]
C1301	PC0603X5R	[11B3]
C1302	PC0603X5R	[11B3]
C1303	PC0201	[11C3]
C1304	PC0402	[11B3]
C1305	PC0402	[11B3]
C1306	PC0201	[11D2]
C1308	PC0603X5R	[11B2]
C1309	PC0603X5R	[11B2]
C1310	PC0402	[11B2]
C1311	PC0201	[11C2]
C1312	PC0201	[11C2]
C1313	PC0201	[11C1]
C1314	PC0603X5R	[11C1]
C1315	PC0603X5R	[11C1]
C1316	PC0603X5R	[11C1]
C1317	PC0201	[11C1]
C1318	PC0603X5R	[11A2]
C1319	PC0603X5R	[11A2]
C1320	PC0201	[11A2]
C1321	PC0603X5R	[11A2]
C1322	PC0201	[11C3]
C1400	PC0201	[12A2]
C1401	PC0201	[12A2]
C1402	PC0201	[12B1]
C1403	PC0201	[12A2]
C1404	PC0201	[12B1]
C1405	PC0201	[12C1]
C1406	PC0201	[12B1]
C1407	PC0201	[12B1]
C1408	PC0201	[12C1]
C1409	PC0201	[12B1]
C1410	PC0402	[12A2]
C1500	PC0201	[13C1]
C1504	PC0201	[13C2]
C1505	PC0201	[13C2]
C1507	PC0201	[13A3]
C1508	PC0201	[13B3]
C1509	PC0201	[13B3]
C1510	PC0201	[13B3]
C1511	PC0201	[13D2]
C1512	PC0201	[13C2]
C1513	PC0201	[13C2]
C1514	PC0201	[13B3]
C1515	PC0201	[13A3]
C1516	PC0201	[13B3]
C1517	PC0201	[13A3]
C1518	PC0201	[13B3]
C1519	PC0201	[13B3]
C1520	PC0201	[13B3]
C1521	PC0201	[13A3]
C1522	PC0201	[13A3]
C1523	PC0201	[13A3]
C1524	PC0201	[13B3]
C1525	PC0201	[13A3]
C1526	PC0201	[13A3]
C1527	PC0201	[13A3]
C1529	PC0201	[13A2]
C1531	PC0201	[13A2]
C1532	PC0201	[13C3]
C1533	PC0201	[13A2]
C1534	PC0201	[13A2]
C1535	PC0201	[13B2]

MODIFIED	NAME	DATE	CHECKED	NAME	DATE
	SCHEMATIC	21/4/2014		SCHEMATIC	21/4/2014

TITLE

Product Name SCHEMATIC BOARD MQ16 MMI V01

SageReal 伊瑞圖紙

PAGE/SHEET 17 / 19

P.N.

FORMAT SIZE A2

VER.	DATE	DOCUMENT NUMBER	TYPE	PART	VERS.

ALL RIGHTS RESERVED. REPRODUCTION AND DISCLOSURE PROHIBITED

SCH DRAWING A2

C1536	PC0201	[13A2]
C1537	PC0201	[13A2]
C1538	PC0201	[13B2]
C1539	PC0201	[13B2]
C1540	PC0201	[13A2]
C1541	PC0201	[13C2]
C1542	PC0201	[13A2]
C1543	PC0201	[13B2]
C1544	PC0201	[13A2]
C1545	PC0201	[13B2]
C1546	PC0201	[13A1]
C1547	PC0201	[13A2]
C1548	PC0201	[13A2]
C1549	PC0201	[13A1]
C1550	PC0201	[13A1]
C1551	PC0805	[13B2]
C1552	PC0201	[13A2]
C1553	PC0201	[13A2]
C1600	PC0201	[14C2]
C1601	PC0201	[14C2]
C1602	PC0201	[14A3]
C1603	PC0201	[14C1]
C1604	PC0201	[14C1]
C1605	PC0201	[14C1]
C1606	PC0201	[14C1]
C1607	PC0201	[14A3]
C1608	PC0201	[14A3]
C1609	PC0201	[14B3]
C1610	PC0201	[14A2]
C1611	PC0201	[14A2]
C1612	PC0201	[14A1]
C1613	PC0201	[14B1]
C1614	PC0201	[14A1]
C1615	PC0201	[14A1]
C1616	PC0201	[14A1]
C1617	PC0201	[14A1]
C1618	PC0201	[14B1]
C1700	PC0201	[14B4]
C1701	PC0201	[14B4]
C1702	PC0201	[14D4]
C1703	PC0201	[14C4]
C1704	PC0201	[14C4]
C1705	PC0201	[14B4]
C1706	PC0201	[14B4]
C1707	PC0201	[14B3]
C1708	PC0201	[14C3]
C1709	PC0201	[14C3]
C1710	PC0201	[14C3]
C1711	PC0201	[14D3]
C1712	PC0201	[14D3]
C1713	PC0201	[14D3]
C1716	PC0201	[14C3]
CR100	DIODE	[1D4]
CR1000	DIODE	[8B3]
CR1001	DIODE	[8B3]
CR1002	DIODE	[8B3]
CR1003	DIODE	[8B2]
CR1008	DIODE	[8C3]
D800	DIODE	[6C4]
D801	DIODE	[6C4]
DS800	LED	[6C1]
FL700	FILTSAW5	[5A4]
FL701	FILTSAW5P	[5C3]
FL702	DP1608-V1524CAT	[5A4]
FL1500	FILTSAW4	[13B4]
FL1600	FILTSAW4	[14C2]
FL1601	FILTSAW9P	[14C2]
FL1602	FILTSAW9P	[14C2]
FL1700	FILTSAW5P	[14C3]
FL1701	FILTSAW5P	[14D3]
FL1702	FILTSAW5P	[14D3]
J100	CONN5PS	[1A1]
J101	CONN5PS	[1A1]
J102	CONN7PS	[1D4]
J103	CONN5PS	[1A1]
J104	CONN5PS	[1A1]
J105	CONN5PS	[1B1]
J106	CONN5PS	[1B1]
J107	CONN5PS	[1B1]
J402	CONN10PS	[4C1]
J403	SIM12PIN	[4A1]
J710	CONN6P2FS	[7C3]
J800	CONN27PS	[6A3]
J801	CONN25PS	[6B3]
J802	CONN2X17PS	[6A2]

J803	CONN4PS	[6D2]
J907	CONN3PS	[8C3]
J1000	CONN2X17PS	[8B4]
J1001	JACKSTEREO5PL2	[8B3]
J1010	CONN4PS	[8D2]
J1600	TSTCOAXS	[14A4]
J1601	CONN4PS	[14A4]
J1700	TSTCOAXS	[14B4]
L101	SELFCMS	[1A1]
L102	SELFCMS	[1A2]
L300	SELFCMS	[3C3]
L702	SELFCMS	[5A3]
L703	SELFCMS	[5B2]
L704	SELFCMS	[5B2]
L712	SELFCMS	[5C3]
L713	SELFCMS	[5C3]
L714	SELFCMS	[5C4]
L800	SELFCMS	[6C4]
L1000	SELFCMS	[8C3]
L1001	SELFCMS	[8C3]
L1002	SELFCMS	[8D3]
L1003	SELFCMS	[8D3]
L1004	SELFCMS	[8B3]
L1005	SELFCMS	[8B1]
L1006	SELFCMS	[8B3]
L1007	SELFCMS	[8B3]
L1008	SELFCMS	[8B1]
L1009	SELFCMS	[8B2]
L1010	SELFCMS	[8B3]
L1011	SELFCMS	[8A2]
L1012	SELFCMS	[8A2]
L1013	SELFCMS	[8C2]
L1014	SELFCMS	[8C2]
L1015	SELFCMS	[8B2]
L1301	SELFCMS	[11B2]
L1302	SELFCMS	[11B2]
L1303	SELFCMS	[11B2]
L1311	SELFCMS	[11A2]
L1500	SELFCMS	[13B3]
L1501	SELFCMS	[13A1]
L1502	SELFCMS	[13B3]
L1503	SELFCMS	[13B3]
L1504	SELFCMS	[13A3]
L1505	SELFCMS	[13A3]
L1506	SELFCMS	[13A3]
L1507	SELFCMS	[13C3]
L1508	SELFCMS	[13A2]
L1517	SELFCMS	[13C3]
L1600	SELFCMS	[14C1]
L1601	SELFCMS	[14D1]
L1602	SELFCMS	[14B1]
L1603	SELFCMS	[14A4]
L1604	SELFCMS	[14A3]
L1605	SELFCMS	[14C1]
L1606	SELFCMS	[14C1]
L1607	SELFCMS	[14A2]
L1608	SELFCMS	[14B2]
L1609	SELFCMS	[14B2]
L1610	SELFCMS	[14B2]
L1611	SELFCMS	[14A2]
L1612	SELFCMS	[14B2]
L1613	SELFCMS	[14D1]
L1614	SELFCMS	[14A1]
L1615	SELFCMS	[14A1]
L1616	SELFCMS	[14B1]
L1617	SELFCMS	[14B1]
L1618	SELFCMS	[14A1]
L1619	SELFCMS	[14A1]
L1620	SELFCMS	[14A1]
L1621	SELFCMS	[14B1]
L1622	SELFCMS	[14B1]
L1623	SELFCMS	[14B1]
L1624	SELFCMS	[14C1]
L1625	SELFCMS	[14C2]
L1626	SELFCMS	[14D1]
L1627	SELFCMS	[14C2]
L1628	SELFCMS	[14C2]
L1629	SELFCMS	[14C1]
L1700	SELFCMS	[14D4]
L1701	SELFCMS	[14D4]
L1702	SELFCMS	[14D4]
L1703	SELFCMS	[14C3]
L1704	SELFCMS	[14C3]
L1705	SELFCMS	[14D3]
L1706	SELFCMS	[14C3]

L1707	SELFCMS	[14C3]
L1708	SELFCMS	[14D3]
L1709	SELFCMS	[14C4]
L1710	SELFCMS	[14D4]
L1711	SELFCMS	[14D4]
M900	APM16D25	[7A4]
MA302	HALL5P	[3B4]
MA305	FAN5400	[3C3]
MA700	MT6627	[5B3]
MA701	MAX2659	[5A3]
MA801	SP6686	[6C1]
MA1300	MT6339	[11B2]
MA1301	FAN53555	[11A2]
MA1400	MT6169	[12B2]
MA1500	RF7241	[13C2]
MA1501	SKY77621	[13B2]
MA1600	DIRECT_COUPLER	[14A3]
MA1601	RFFEM_EU	[14A2]
MK1002	MICSP0102N	[8C1]
MN100	MT6323	[1B2]
MN100	MT6323	[2C4]
MN300	MT6582X	[2B2 2A4]
MN300	MT6582X	[3B2 3A4]
MN300	MT6582X	[4B4]
MN300	MT6582X	[5C1]
MN400	EMMCDDR2_186	[4B3]
MN900	AK8963C	[7C1]
MN1101	MT6290X	[9C3 9A1]
MN1101	MT6290X	[10B3]
MN1101	MT6290X	[12B4]
R100	PR0805	[1C4]
R101	PR0201	[1C3]
R102	PR0201	[1C3]
R103	PR0201	[1C3]
R104	PR0201	[1C2]
R106	PR0201	[1C2]
R107	PR0201	[1C3]
R108	PR0201	[1B3]
R114	PR0201	[1B1]
R204	PR0201	[2C4]
R205	PR0201	[2C4]
R206	PR0201	[2D4]
R208	PR0201	[2C3]
R209	PR0201	[2D3]
R300	PR0201	[3A2]
R301	PR0201	[3B3]
R302	PR0201	[3B3]
R303	PR0201	[3B4]
R304	PR0201	[3B3]
R305	PR0201	[3B3]
R306	PR0201	[3B3]
R307	PR0201	[3B2]
R308	PR0201	[3D4]
R309	PR0201	[3D4]
R310	PR0201	[3B1]
R311	PR0201	[3B1]
R312	PR0201	[3B4]
R314	PR0201	[3D4]
R316	PR0201	[3D4]
R317	PR0201	[3D3]
R400	PR0201	[4C4]
R401	PR0201	[4C4]
R407	PR0201	[4B4]
R432	PR0201	[4B3]
R433	PR0201	[4B3]
R702	PR0201	[5A4]
R710	PR0201	[7C4]
R800	PR0201	[6D4]
R801	PR0201	[6B4]
R802	PR0402	[6A1]
R804	PR0201	[6C3]
R805	PR0201	[6D3]
R811	PR0201	[6C3]
R814	PR0201	[6D3]
R820	PR0201	[6D1]
R821	PR0201	[6D1]
R822	PR0603	[6D1]
R829	PR0201	[6D2]
R830	PR0201	[6D2]
R831	PR0201	[6D2]
R903	PR0201	[7A4]
R904	PR0201	[7A4]
R905	PR0201	[7A4]
R912	PR0201	[7B1]
R1001	PR0201	[8A3]

R1002	PR0201	[8A3]
R1003	PR0201	[8D2]
R1004	PR0201	[8D2]
R1005	PR0201	[8B2]
R1006	PR0201	[8B2]
R1007	PR0201	[8A3]
R1008	PR0201	[8A3]
R1009	PR0201	[8B1]
R1010	PR0201	[8B1]
R1011	PR0201	[8C1]
R1012	PR0201	[8B1]
R1025	PR0402	[8B1]
R1026	PR0402	[8B1]
R1100	PR0201	[9A4]
R1109	PR0201	[9A4]
R1111	PR0201	[9A4]
R1112	PR0201	[9A4]
R1113	PR0201	[9A3]
R1114	PR0201	[9A3]
R1115	PR0201	[9A4]
R1116	PR0201	[9A4]
R1117	PR0201	[9A4]
R1118	PR0201	[9A4]
R1119	PR0201	[9B4]
R1120	PR0201	[9B4]
R1121	PR0201	[9C3]
R1122	PR0201	[10D4]
R1123	PR0201	[13D4]
R1124	PR0201	[9B2]
R1125	PR0201	[9A2]
R1126	PR0201	[9A2]
R1127	PR0201	[9A2]
R1128	PR0201	[9B1]
R1130	PR0201	[9B3]
R1131	PR0201	[9C2]
R1132	PR0201	[9C2]
R1300	PR0201	[11A1]
R1400	PR0201	[12C3]
R1401	PR0201	[12C3]
R1402	PR0201	[12C3]
R1403	PR0201	[12B2]
R1404	PR0201	[12B2]
R1405	PR0201	[12C1]
R1406	PR0201	[14A3]
R1407	PR0201	[14A3]
R1408	PR0201	[14A3]
R1501	PR0201	[13B2]
R1502	PR0201	[13C2]
R1504	PR0201	[13B2]
R1505	PR0201	[13B2]
R1506	PR0201	[13C2]
R1507	PR0201	[13B2]
R1508	PR0201	[13C1]
R1509	PR0201	[13C2]
R1600	PR0201	[14A3]
R1700	PR0201	[14B4]
RT100	VARISTANCE	[1D4]
RT721	VARISTANCE	[7C4]
RT722	VARISTANCE	[7C4]
RT723	VARISTANCE	[7C4]
RT724	VARISTANCE	[7C3]
RT725	VARISTANCE	[7C3]
RT1000	VARISTANCE	[8D3]
RT1001	VARISTANCE	[8D3]
RT1010	VARISTANCE	[8C1]
RT1018	VARISTANCE	[8D2]
RT1019	VARISTANCE	[8D2]
RT1100	CTN	[10D4]
RT1101	CTN	[13D4]
RT1400	CTN	[12C3]
SW1700	SKY13373	[14B3]
TP100	POINTEST	[1C4]
TP101	POINTEST	[1D4]

ALL RIGHTS RESERVED.REPRODUCTION AND DISCLOSURE PROHIBITED

MODIFIED	NAME	DATE	CHECKED	NAME	DATE
	SCHEMATIC	21/4/2014		SCHEMATIC	21/4/2014

TITLE

Product Name SCHEMATIC BOARD MQ16 MMI V01

SageReal 伊瑞图纸

PAGE/SHEET 18 / 19

P.N.

SageReal 伊瑞图纸

VER.	DATE	FORMAT SIZE	DOCUMENT NUMBER	TYPE	PART	VERS.
		A2				

SCH DRAWING A2

TP102	PLOT	[1B3]
TP103	POINTEST	[1C4]
TP308	POINTEST	[3B1]
TP309	POINTEST	[3B1]
TP802	PLOT	[6B2]
TP803	PLOT	[6B2]
TP804	PLOT	[6B2]
TP805	PLOT	[6B2]
TP806	PLOT	[6B2]
TP807	PLOT	[6B2]
TP808	PLOT	[6B2]
TP809	PLOT	[6C2]
TP810	PLOT	[6C2]
TP811	PLOT	[6C2]
TP812	PLOT	[6C2]
TP813	PLOT	[6C2]
TP814	PLOT	[6C2]
TP815	PLOT	[6C2]
TP900	PLOT	[7C4]
TP901	PLOT	[7D4]
TP902	PLOT	[7D4]
TP903	PLOT	[7D4]
TP904	PLOT	[7D4]
TP906	PLOT	[9B4]
TP1000	PLOT	[8D4]
TP1001	POINTEST	[8D4]
TP1006	POINTEST	[8D4]
TP1020	PLOT	[8C4]
TP1021	PLOT	[8C4]
TP1022	PLOT	[8C4]
TP1023	PLOT	[8C4]
TP1024	PLOT	[8C4]
TP1025	PLOT	[8C4]
TP1027	PLOT	[8C4]
TP1031	POINTEST	[8C4]
TP1034	POINTEST	[8C1]
U801	CONVSOT236	[6C4]
U901	BMA220	[7A1]
U1000	YDA165C	[8B1]
Y100	QUARTZCM5	[1C1]
Y700	OSCIL6PV1	[5B4]
Y1400	OSCIL6PV2	[12C1]
Z100	ETOILE2	[1B4]
Z101	ETOILE2	[1B4]
Z102	ETOILE2	[1B4]
Z103	ETOILE2	[1B4]
Z104	ETOILE2	[1C2]
Z105	ETOILE2	[1C4]
Z106	ETOILE2	[1B4]
Z107	ETOILE2	[1A3]
Z110	ETOILE2	[1C3]
Z111	ETOILE2	[1C3]
Z200	ETOILE2	[2C3]
Z201	ETOILE2	[2C3]
Z202	ETOILE2	[2C3]
Z203	ETOILE2	[2B1]
Z204	ETOILE2	[2C3]
Z207	ETOILE2	[2B1]
Z700	ETOILE2	[5A2]
Z701	ETOILE2	[5A2]
Z703	ETOILE2	[5B2]
Z704	ETOILE2	[5B1]
Z1000	ETOILE2	[8A4]
Z1001	ETOILE2	[8B3]
Z1003	ETOILE2	[8D1]
Z1004	ETOILE2	[8A1]
Z1100	ETOILE2	[9B2]
Z1101	ETOILE2	[9B2]
Z1102	ETOILE2	[11B2]
Z1300	ETOILE2	[11B4]
Z1301	ETOILE2	[11B4]
Z1302	ETOILE2	[11B4]
Z1303	ETOILE2	[11C4]
Z1304	ETOILE2	[11C4]
Z1305	ETOILE2	[11B4]
Z1306	ETOILE2	[11B3]
Z1307	ETOILE2	[11D3]
Z1308	ETOILE2	[11A2]
Z1310	ETOILE2	[11B2]
Z1311	ETOILE2	[11B2]
Z1312	ETOILE2	[11C4]
Z1500	ETOILE2	[13A1]
Z1702	ETOILE2	[14B4]

ALL RIGHTS RESERVED. REPRODUCTION AND DISCLOSURE PROHIBITED

MODIFIED	NAME	DATE	CHECKED	NAME	DATE
	SCHEMATIC	21/4/2014		SCHEMATIC	21/4/2014

TITLE

Product Name: SCHEMATIC BOARD MQ16 MMI V01

SageReal 伊達圖紙

PAGE/SHEET 19 / 19

P.N.

SageReal 伊達圖紙

FORMAT SIZE: A2

VER.	DATE	DOCUMENT NUMBER	TYPE	PART	VERS.

SCH DRAWING A2