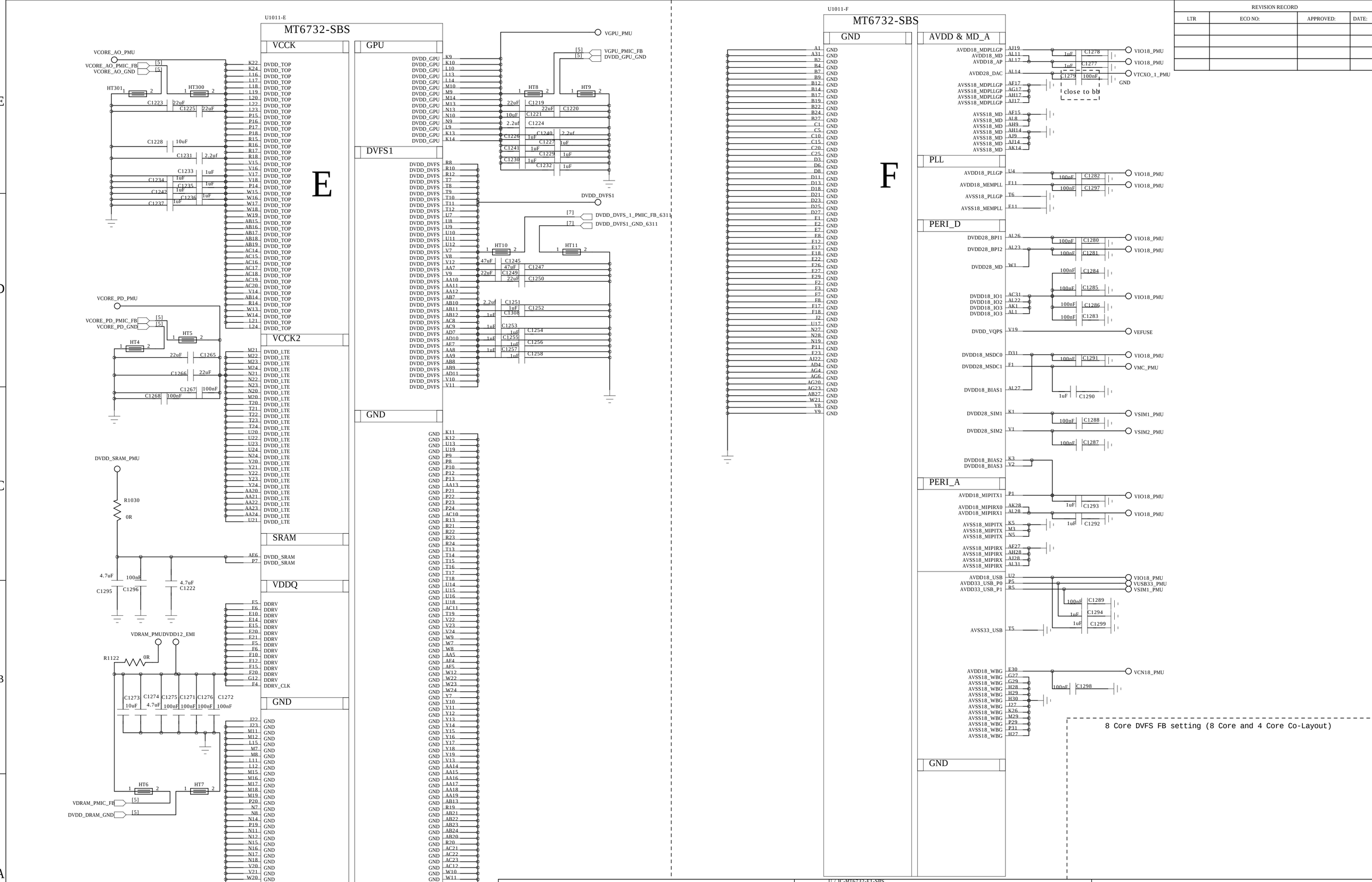

REVISION RECORD			
LTR	ECO NO:	APPROVED:	DATE:

COMPANY: 上 海 锐 嘉 科 通 信 技 术 有 限 公 司
Shanghai RagenTek Communication Technology Co.,Ltd

DRAWN	WY	DATED	2014-06-16
CHECKED	Wu Xu	DATED	< >

MODEL: J3026

TITLE: 1_MT6732-BB-POWER

Modified Date: 2014/10/9

VERSION: V1.0

SHEET: 1 OF 7

REVISION RECORD			
LTR	ECO NO:	APPROVED:	DATE:

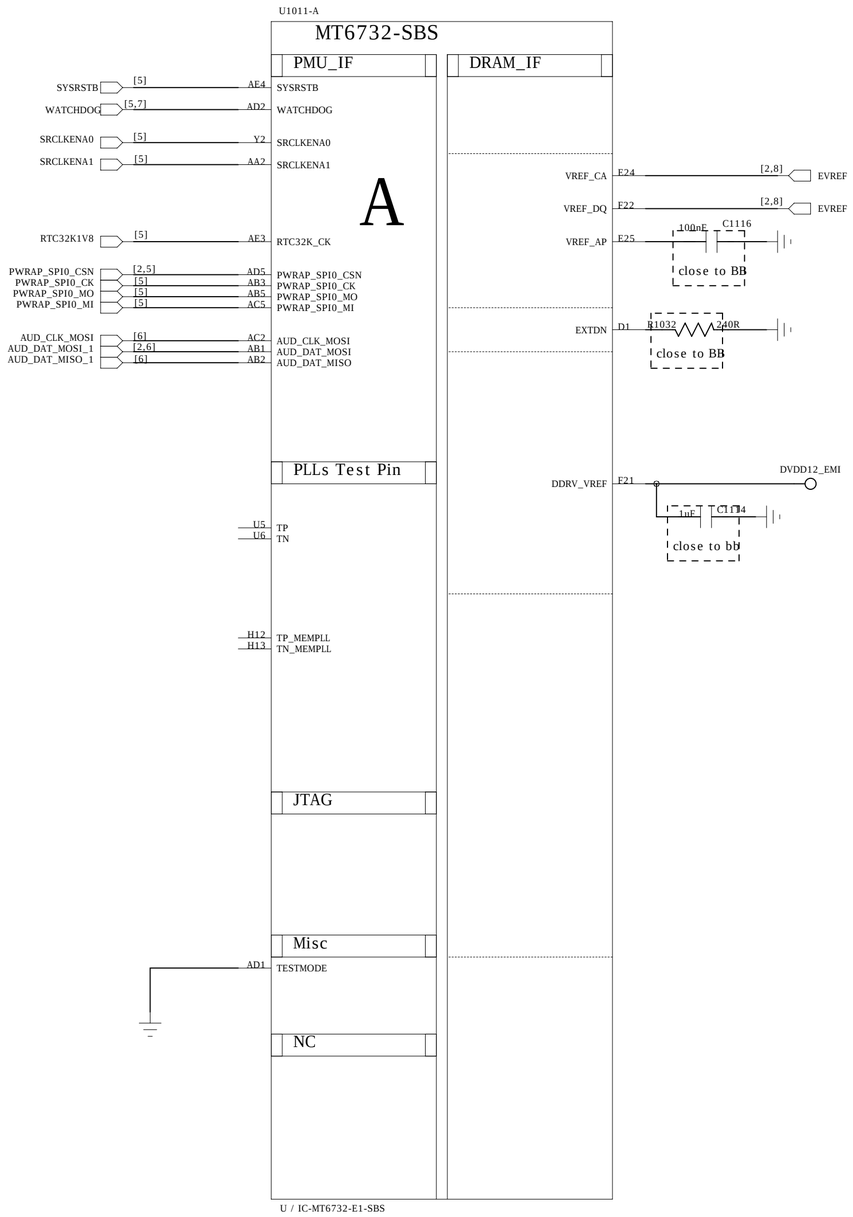

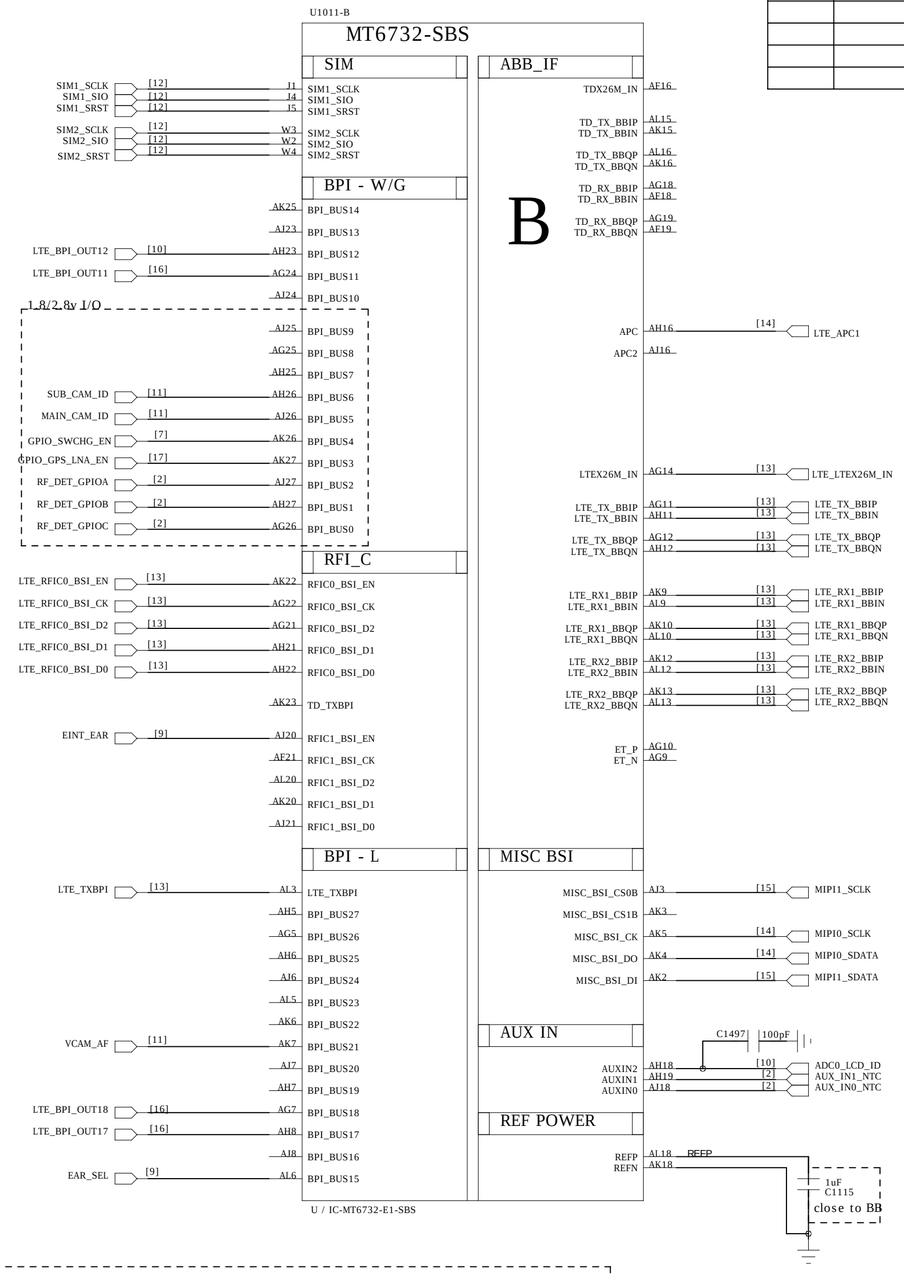

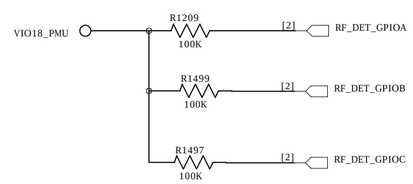

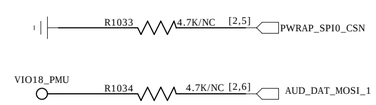

Thermister / To sense board level temperature

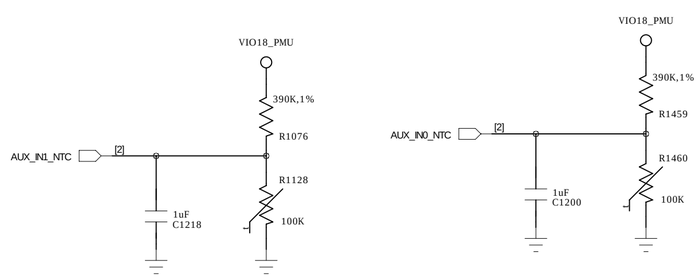

COMPANY: 上海锐嘉科通信技术有限公司 Shanghai RagenTek Communication Technology Co.,Ltd		MODEL: J3026	Modified Date: 2014/10/9
DRAWN: WY	DATED: 2014-06-16	TITLE: 2_MT6732-BB-BPI/BSI	VERSION: V1.0
CHECKED: Wu Xu	DATED: < >		SHEET: 2 OF 7

REVISION RECORD			
LTR	ECO NO:	APPROVED:	DATE:

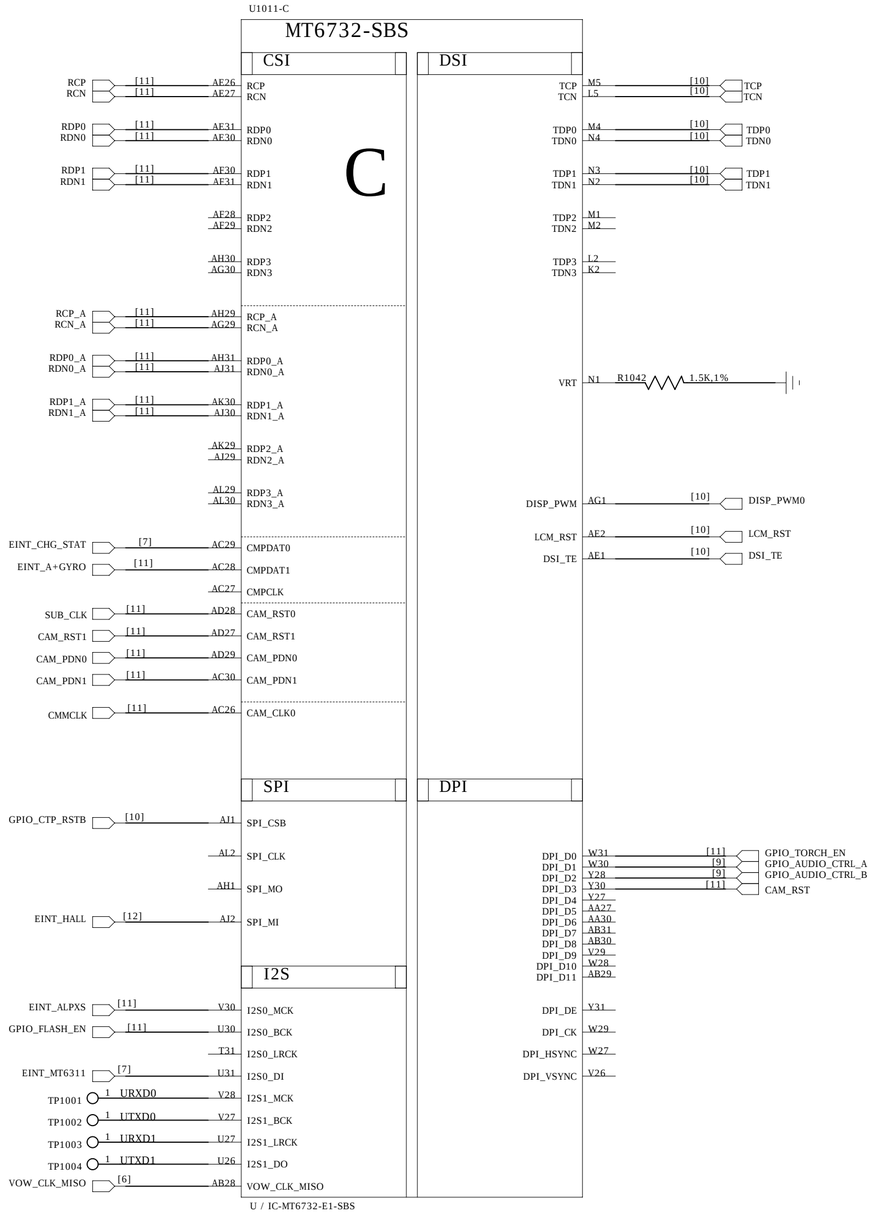

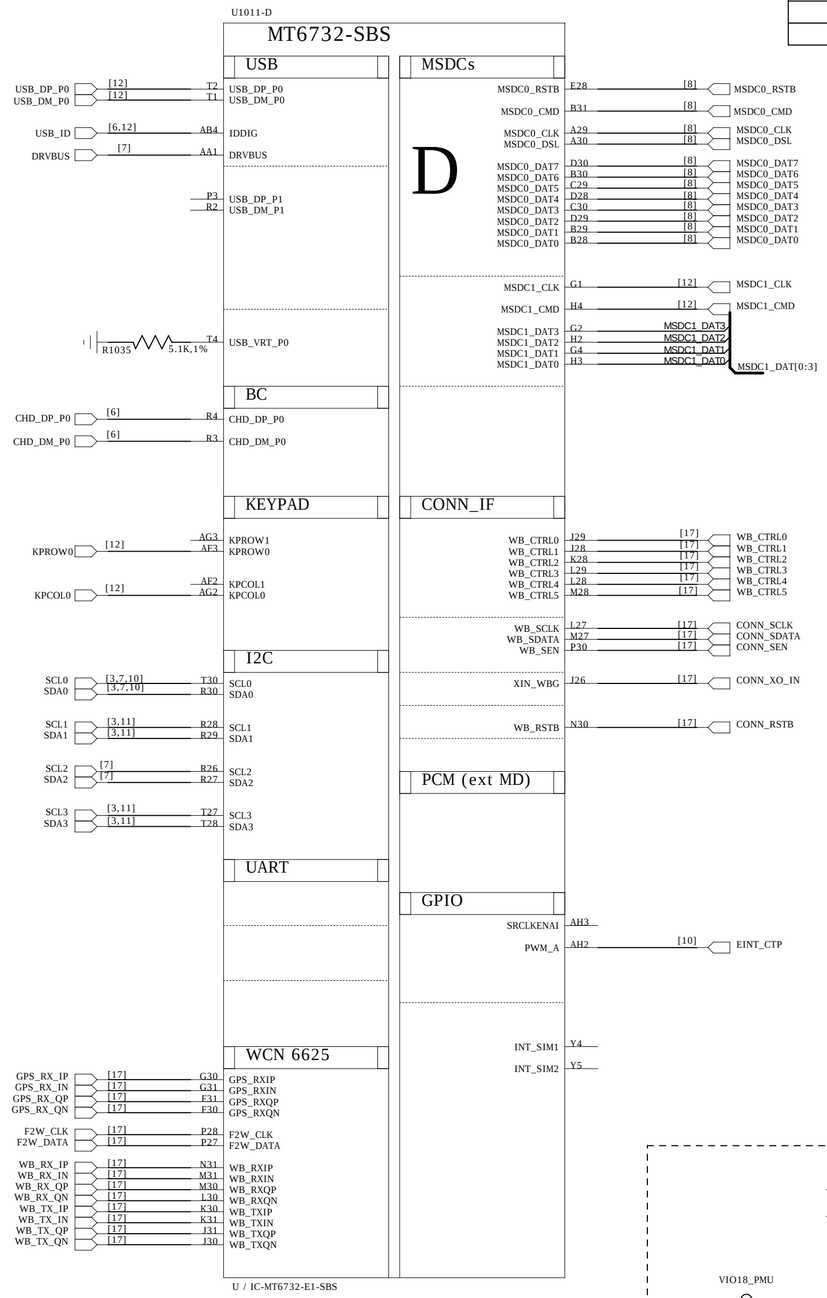

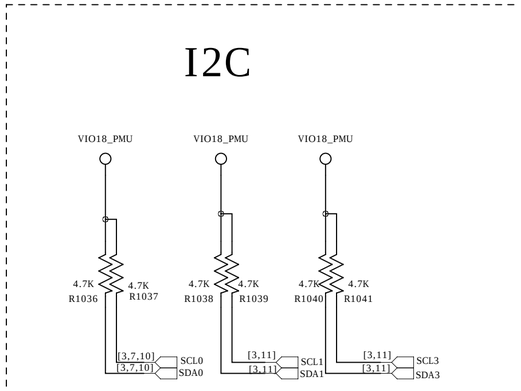

MARK1 1 FIDUCIAL_PANEL

MARK2 1 FIDUCIAL_PANEL

COMPANY: 上海锐嘉科通信技术有限公司 Shanghai RagenTek Communication Technology Co.,Ltd			
DRAWN	WY	DATED	2014-06-16
CHECKED	Wu Xu	DATED	< >

MODEL: J3026

TITLE: 3_MT6732-BB-CSI/USB

Modified Date: 2014/10/9

VERSION: V1.0

SHEET: 3 OF 17

REVISION RECORD			
LTR	ECO NO:	APPROVED:	DATE:

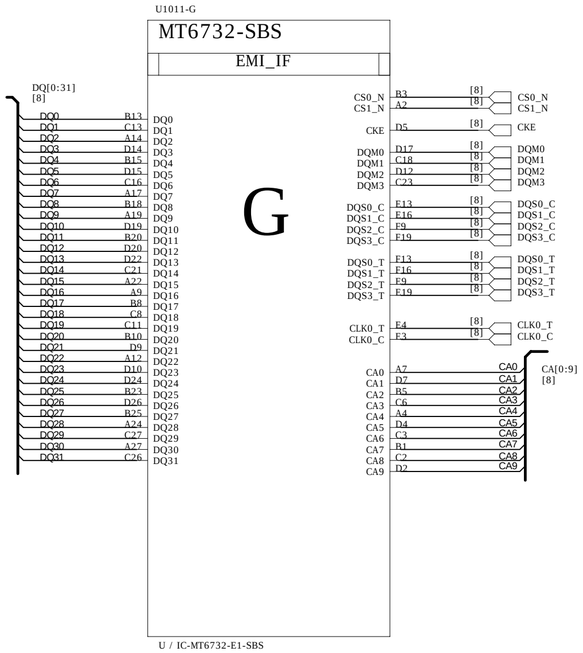

COMPANY: 上 海 锐 嘉 科 通 信 技 术 有 限 公 司 Shanghai RagenTek Communication Technology Co.,Ltd				MODEL: J3026	Modified Date: 2014/10/9
DRAWN	WY	DATED	2014-06-16	TITLE: 4_MT6732-BB/DDR	VERSION: V1.0 / SHEET: 4 OF 17
CHECKED	Wu Xu	DATED	< >		

REVISION RECORD			
LTR	ECO NO:	APPROVED:	DATE:
	[10]		

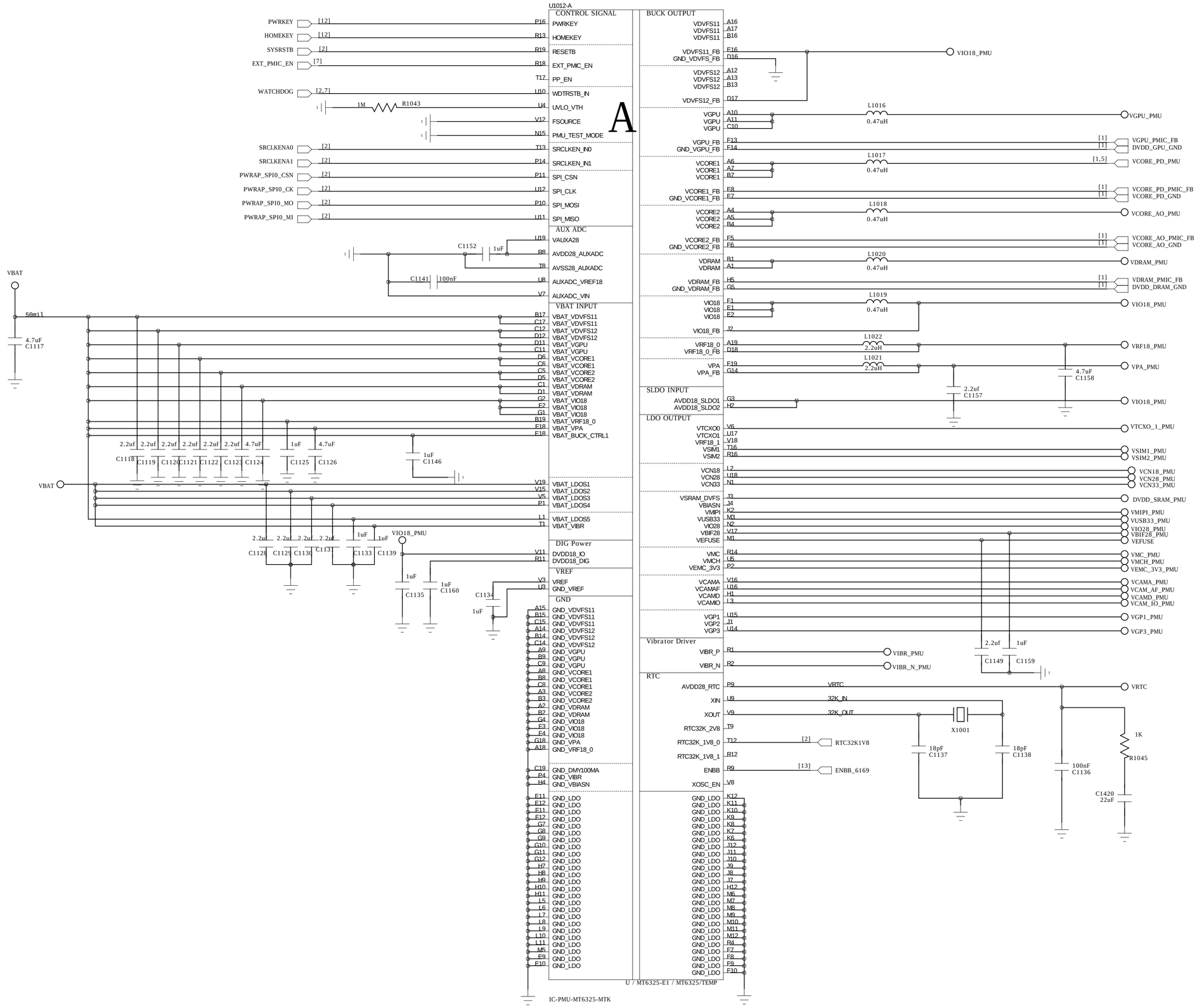

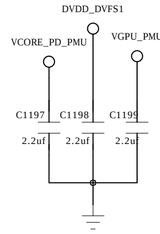

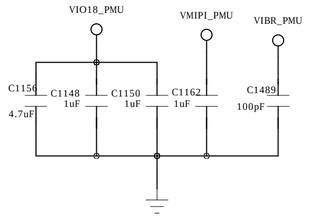

COMPANY: 上 海 锐 嘉 科 通 信 技 术 有 限 公 司 Shanghai RagenTek Communication Technology Co.,Ltd		MODEL: J3026	Modified Date: 2014/10/9
DRAWN WY	DATED 2014-06-16	TITLE: 5_MT6325	VERSION: V1.0 SHEET: 5 OF 17
CHECKED Wu Xu	DATED < >		

REVISION RECORD			
LTR	ECO NO:	APPROVED:	DATE:

MT6325_AUDIO

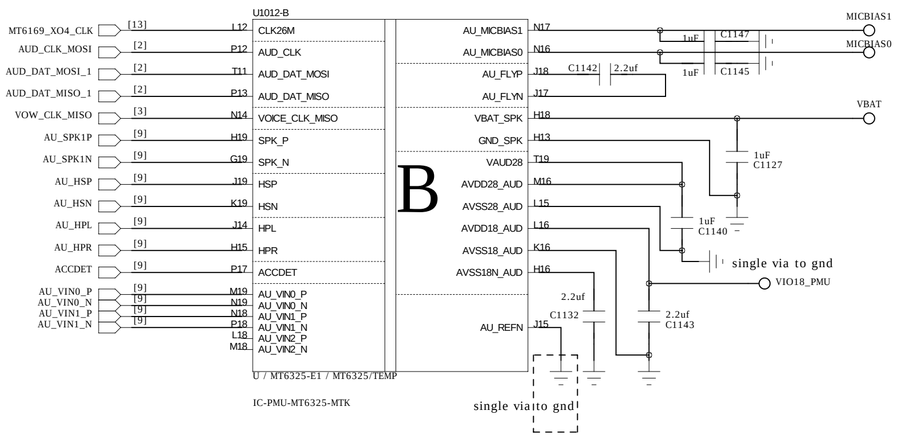

MT6325_charger

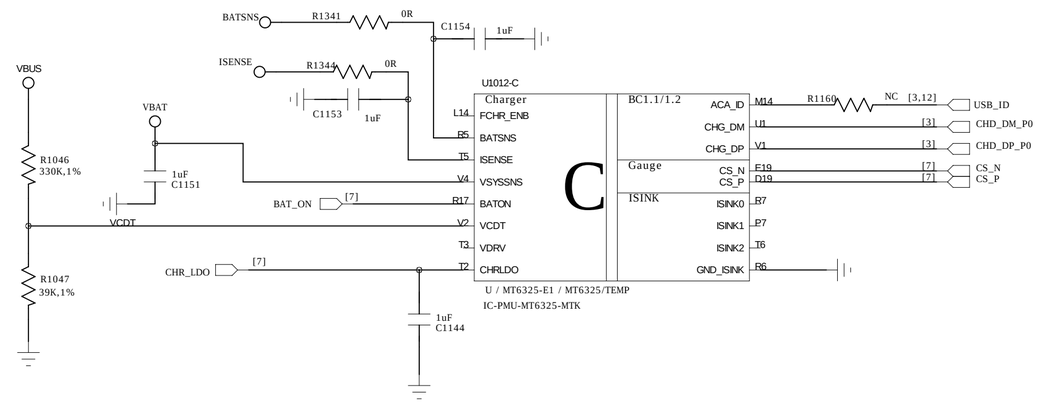

COMPANY: 上 海 锐 嘉 科 通 信 技 术 有 限 公 司 Shanghai RagenTek Communication Technology Co.,Ltd				MODEL: J3026	Modified Date: 2014/10/9
DRAWN	WY	DATED	2014-06-16	TITLE: 6_MT6325-AUDIO/CHARGER	VERSION: V1.0 SHEET: 6 OF 7
CHECKED	Wu Xu	DATED	< >		

REVISION RECORD			
LTR	ECO NO:	APPROVED:	DATE:

2-Phase Buck

MT6311 / 2-Phase Buck I2C address: 0X6B (Write:0x, Read:0x)

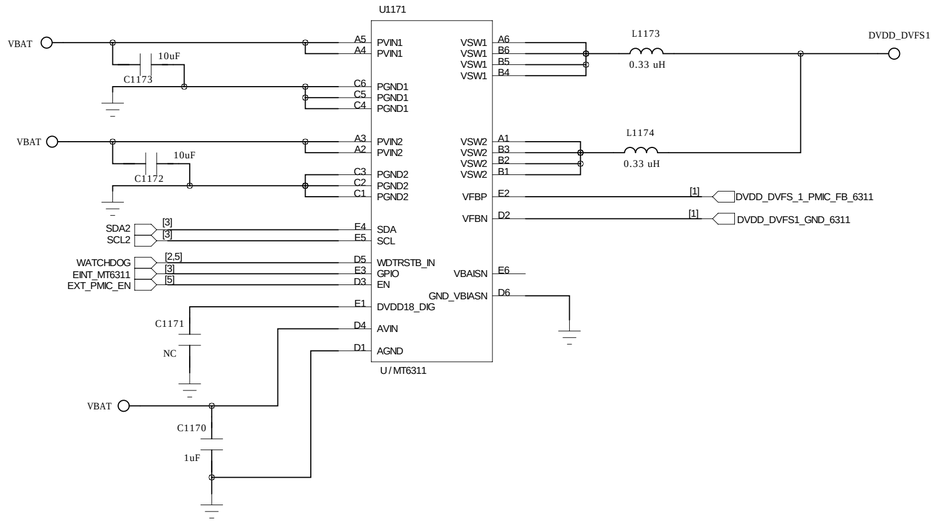

BATTERY CONNECTOR

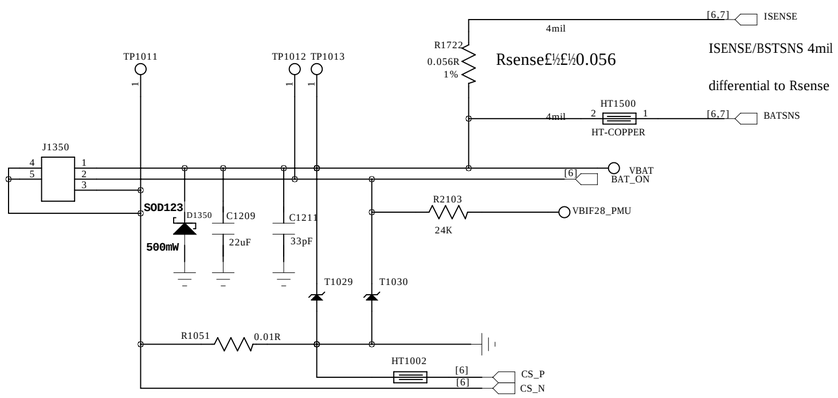

Charger

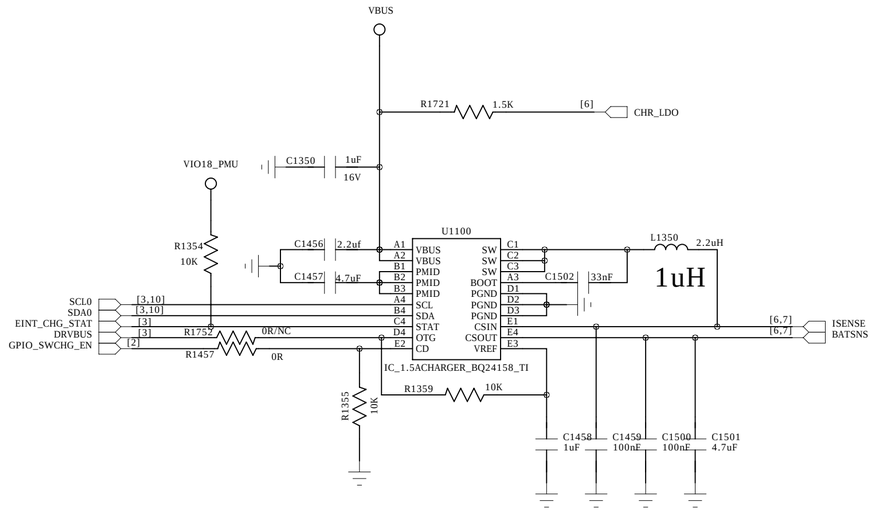

COMPANY: Shanghai Ragentek Intelligent Technology Limited				MODEL: J3026	Modified Date: 2014/10/9	
DRAWN	WY	DATED	2014-06-16	TITLE: 7_MT6311/CHARGER	VERSION: V1.0	SHEET: 7 OF 17
CHECKED	Wu Xu	DATED	< >			

REVISION RECORD			
LTR	ECO NO:	APPROVED:	DATE:

eMMC+LPDDR3

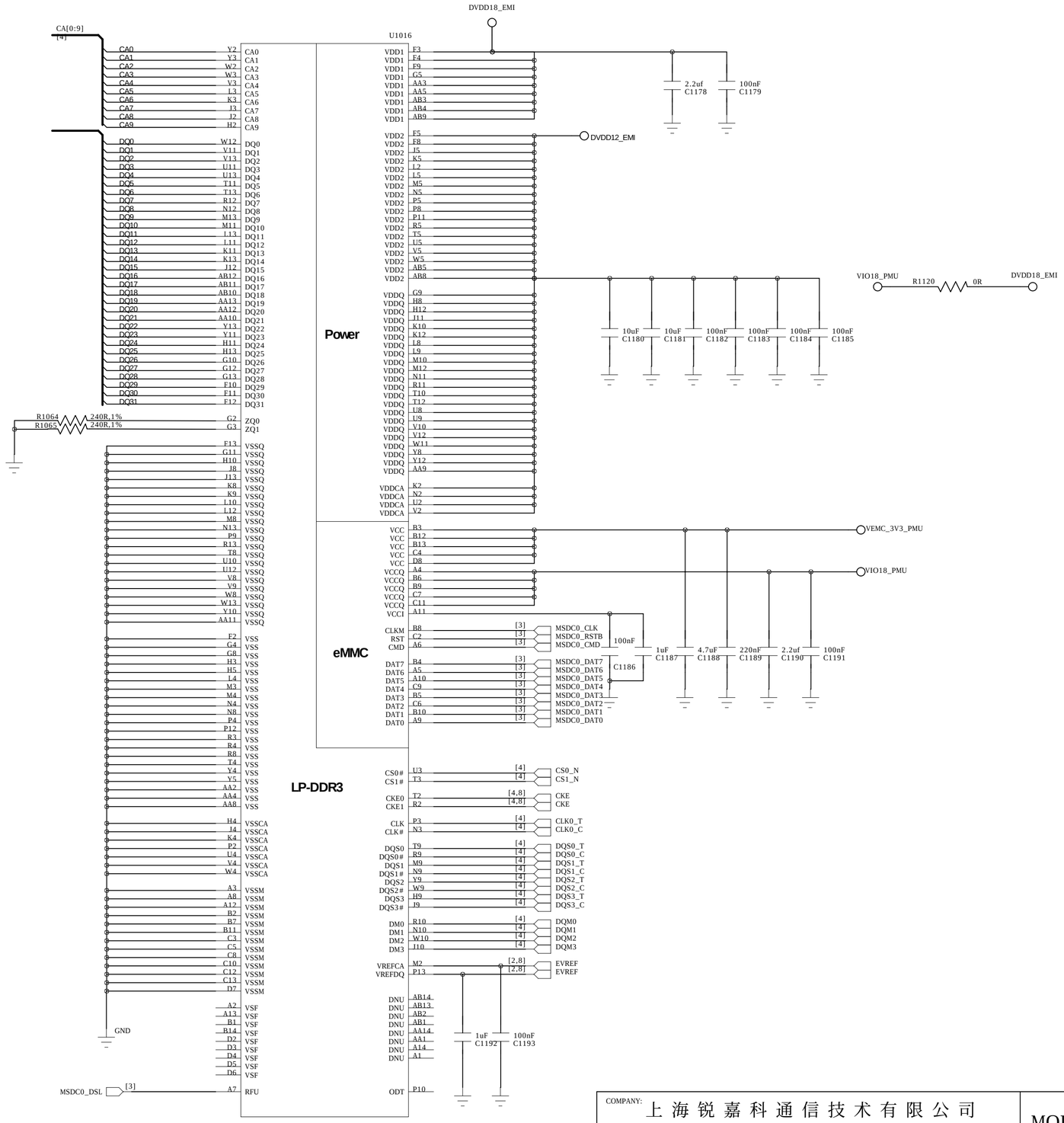

COMPANY: 上 海 锐 嘉 科 通 信 技 术 有 限 公 司 Shanghai RagenTek Communication Technology Co.,Ltd		MODEL: J3026	Modified Date: 2014/10/9
DRAWN WY	DATED 2014-06-16	TITLE: 9_MEMORY	VERSION: V1.0 / SHEET: 8 / OF 17
CHECKED Wu Xu	DATED < >		

LTR	ECO NO:	APPROVED:	DATE:

SPK PA

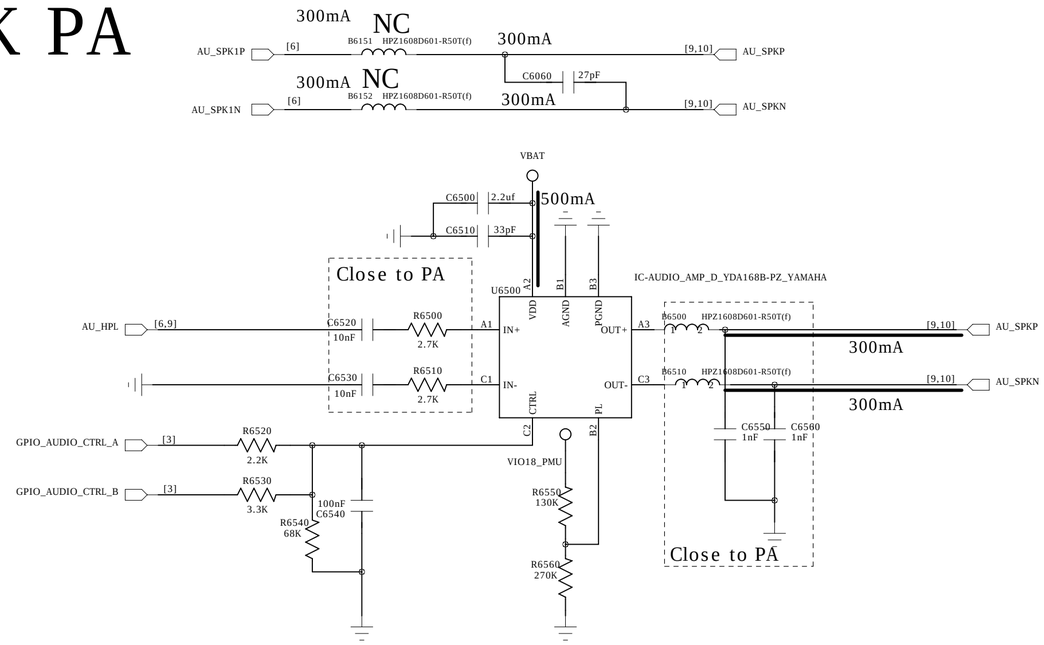

Microphone

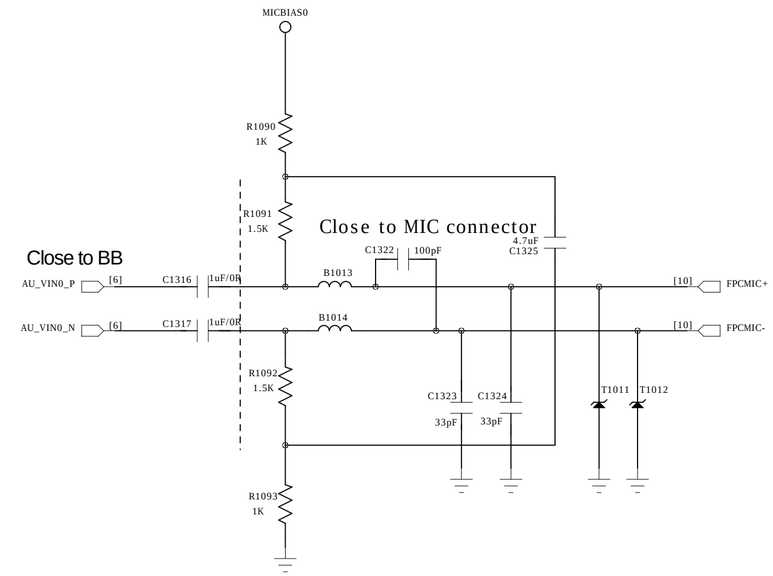

Headset Connector

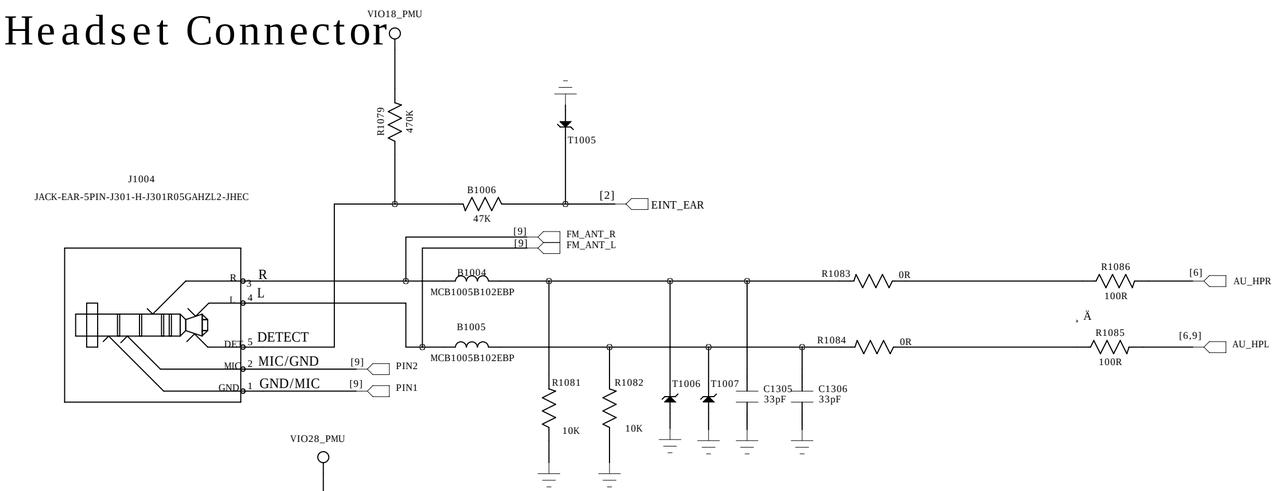

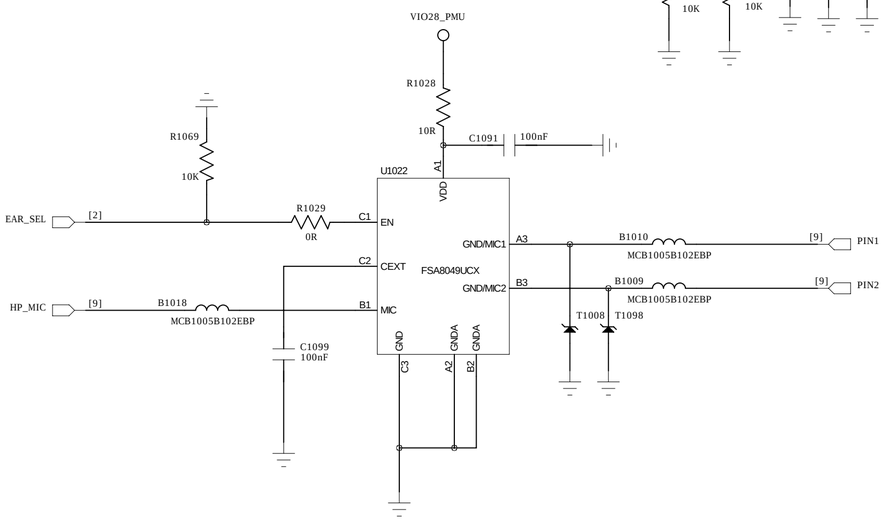

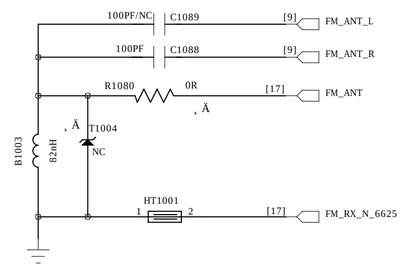

Receiver

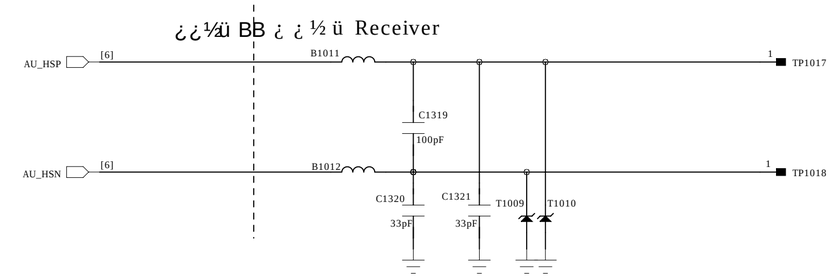

Earphone Microphone

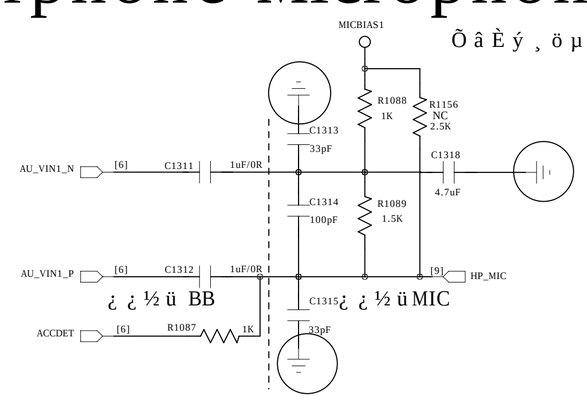

COMPANY: Shanghai Ragentek Intelligent Technology Limited				MODEL: J3026	Modified Date: 2014/10/9
DRAWN	WY	DATED	2014-06-16	TITLE: 10_AUDIO	VERSION: V1.0 SHEET: 9 OF 17
CHECKED	Wu Xu	DATED	< >		

6 5 4 3 2 1

REVISION RECORD			
LTR	ECO NO:	APPROVED:	DATE:

LCM EMI FILTER & ESD

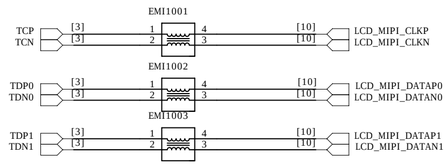

COF CAP TP/Driver IC GT9150

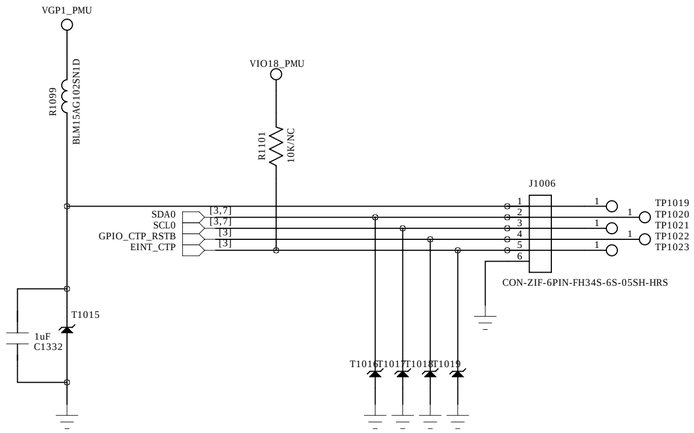

LCD CONNECTOR

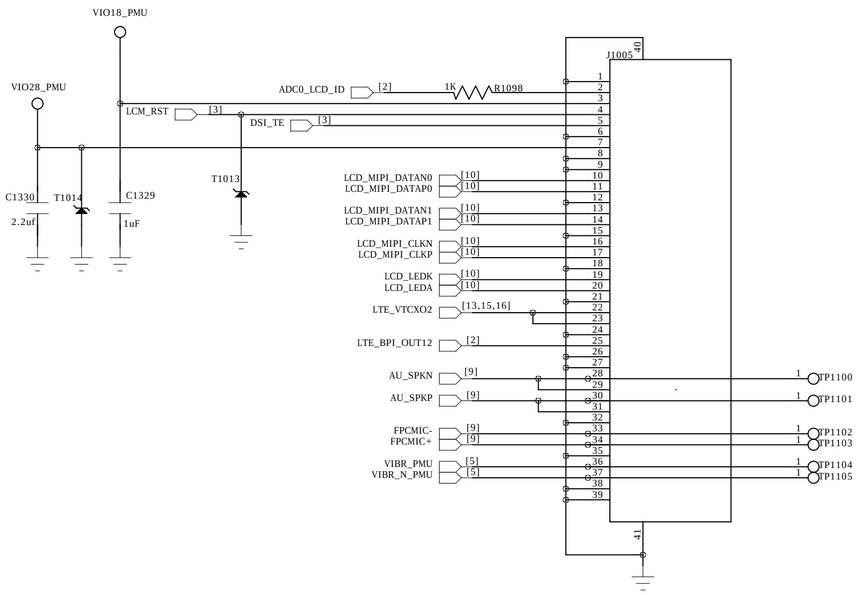

LCD_BACKLIGHT

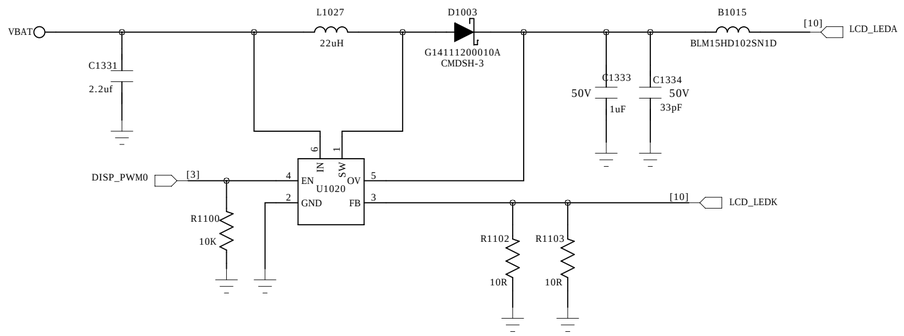

COMPANY: Shanghai Ragentek Intelligent Technology Limited				MODEL: J3026	Modified Date: 2014/10/9
DRAWN	WY	DATED	2014-06-16	TITLE: 11_LCD/TP	VERSION: V1.0 / SHEET: 10 OF 17
CHECKED	Wu Xu	DATED	< >		

REVISION RECORD			
LTR	ECO NO:	APPROVED:	DATE:

Back Camera £ ¨ Main £ ©

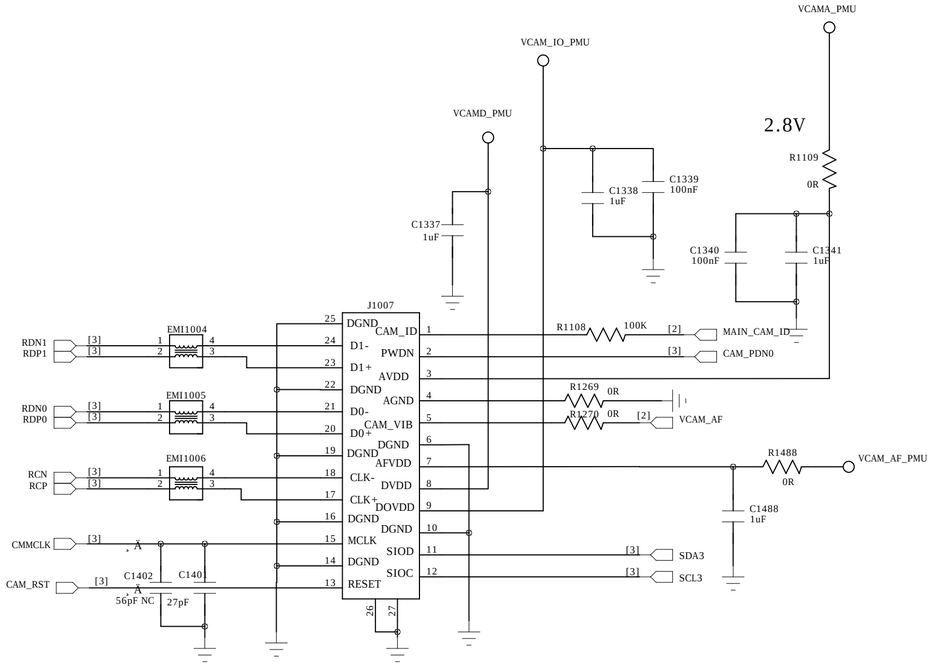

CAMERA FLASH Led

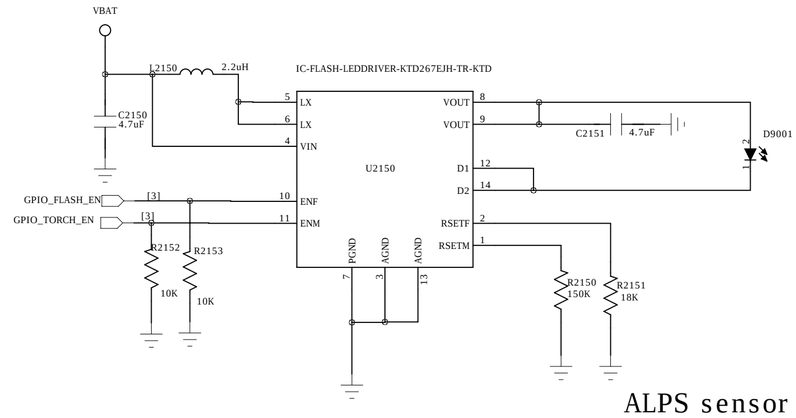

ALPS sensor

Front Camera £ ¨ Sub £ ©

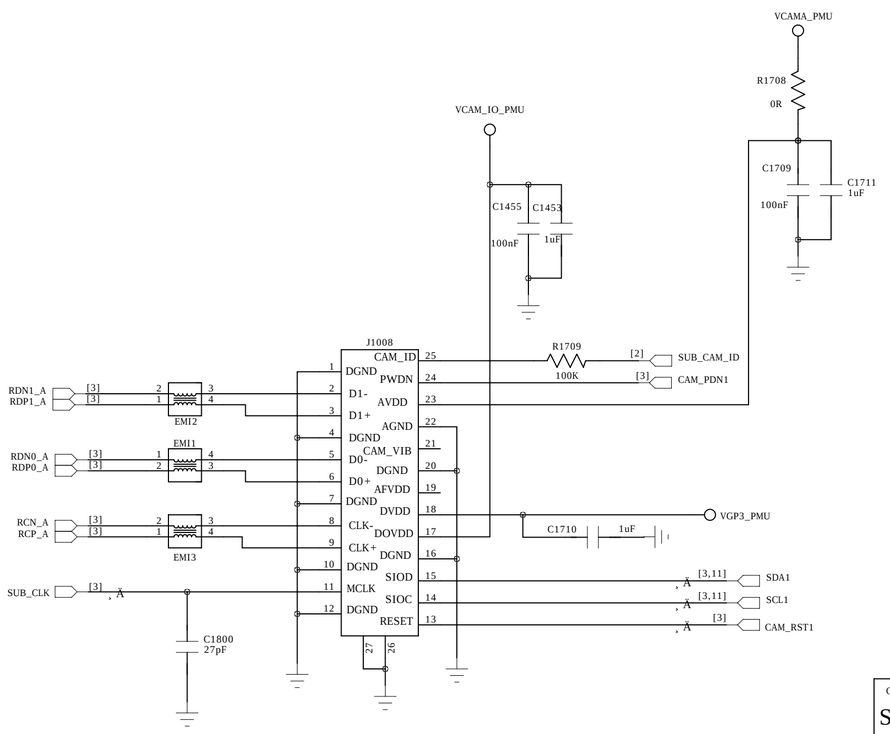

G_Sensor Accelerometer

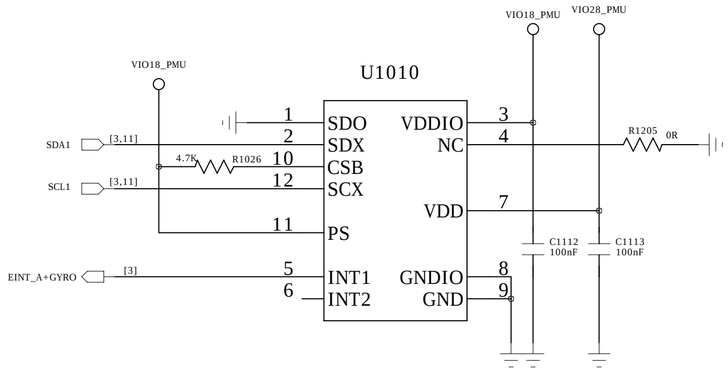

IC-ACCELEROMETER-BMA250-BOSCH

1.SDO connect to GND for default addr 0X18

2.PS connect to VDDIO for I2C

3.IC will use BMA223 instead of BMA250,PIN TO PIN

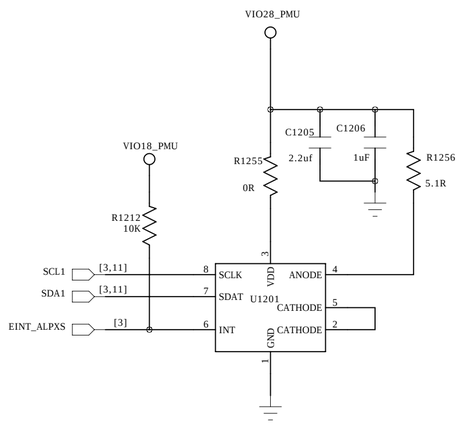

IC-PROXIMITY-SENSOR-CM36682M3OE-CAPELLA

COMPANY: Shanghai Ragentek Intelligent Technology Limited				MODEL: J3026	Modified Date: 2014/10/9	
DRAWN	WY	DATED	2014-06-16	TITLE: 12_CAMERA/FLASH/G-SENSOR	VERSION: V1.0	SHEET: 11 OF 17
CHECKED	Wu Xu	DATED	< >			

LTR	ECO NO:	APPROVED:	DATE:

Dual Micro SIM/UIM TF CONNECTOR

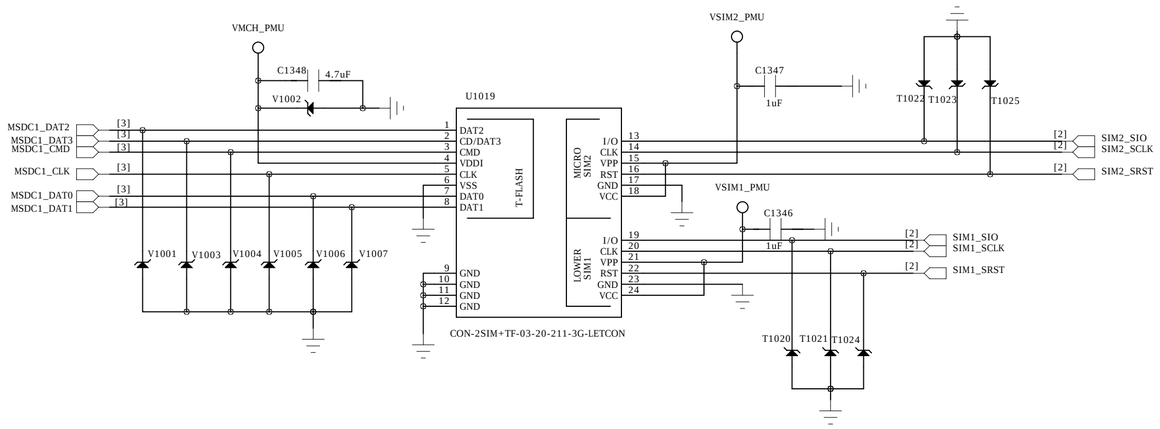

Side Key Connector

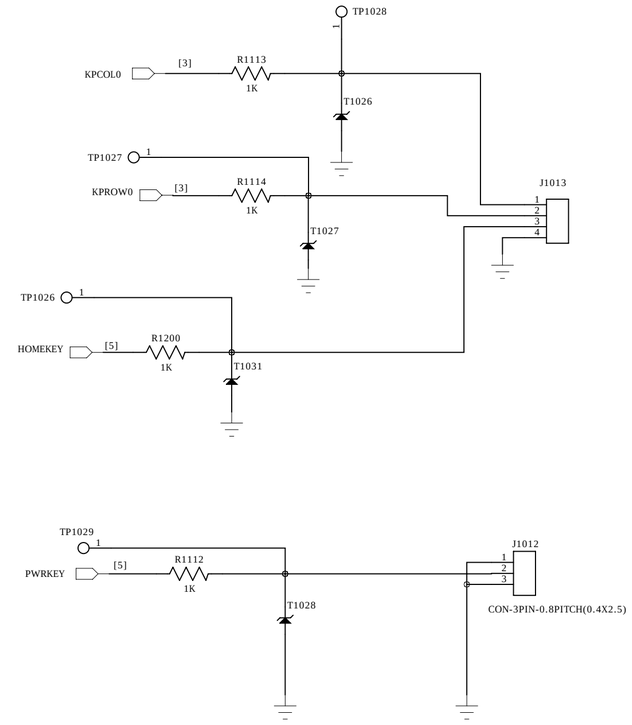

Micro 5 Pin USB Connector

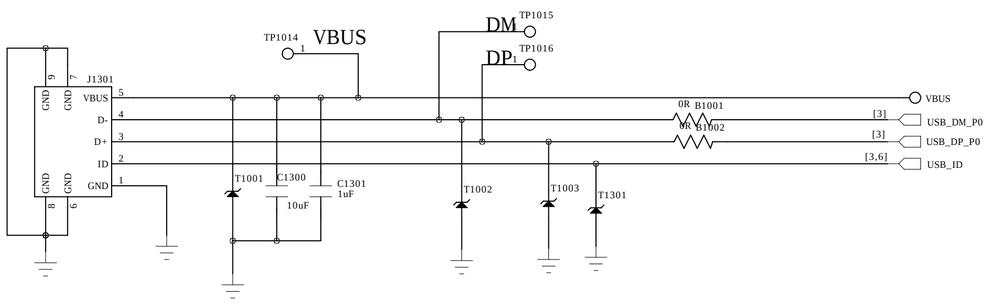

HALL SENSOR

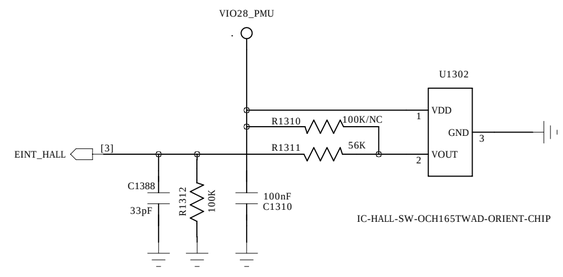

COMPANY: 上海锐嘉科通信技术有限公司 Shanghai RagenTek Communication Technology Co.,Ltd		MODEL: J3026	Modified Date: 2014/10/9
DRAWN	WY	DATED	2014-06-16
CHECKED	Wu Xu	DATED	< >
TITLE: 13_SIM/TF/KEY/USB		VERSION: V1.0	SHEET: 12 OF 17

6 5 4 3 2 1

REVISION RECORD			
LTR	ECO NO:	APPROVED:	DATE:

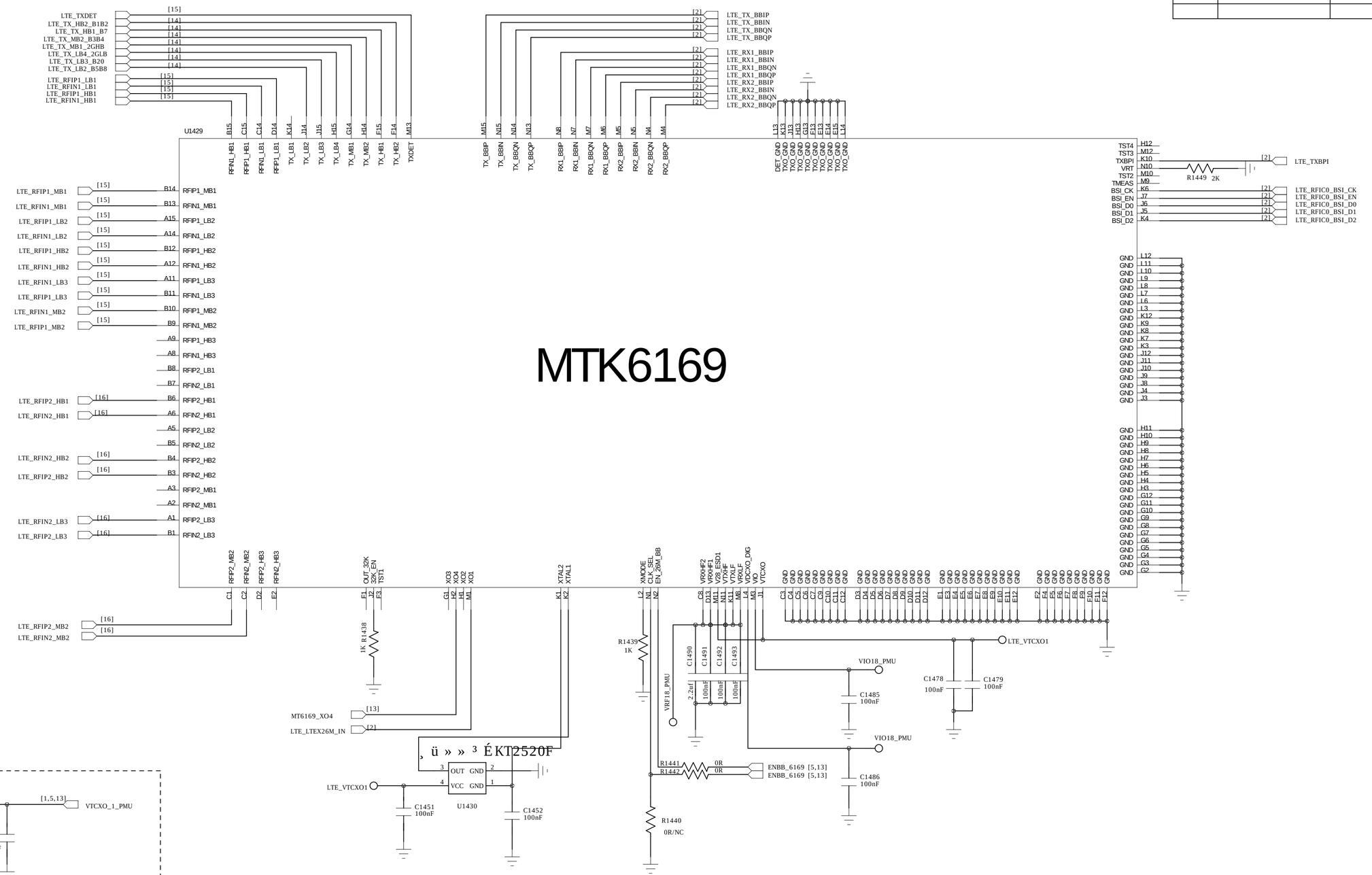

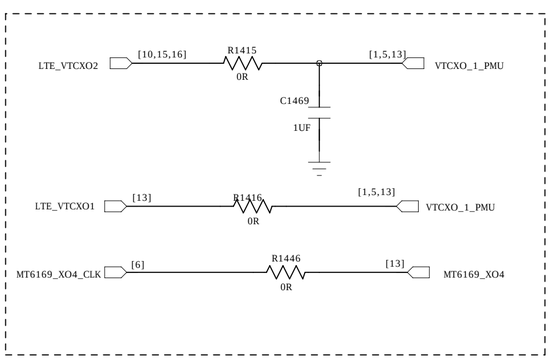

COMPANY: Shanghai Ragentek Intelligent Technology Limited				MODEL: J3026	Modified Date: 2014/10/9
DRAWN	WY	DATED	2014-06-16	TITLE: 14_MT6169	VERSION: V1.0 SHEET: 13 OF 17
CHECKED	Wu Xu	DATED	< >		

REVISION RECORD			
LTR	ECO NO:	APPROVED:	DATE:

2GLB/2GHB/B1/B2/B3/B5/B8/B20 PA

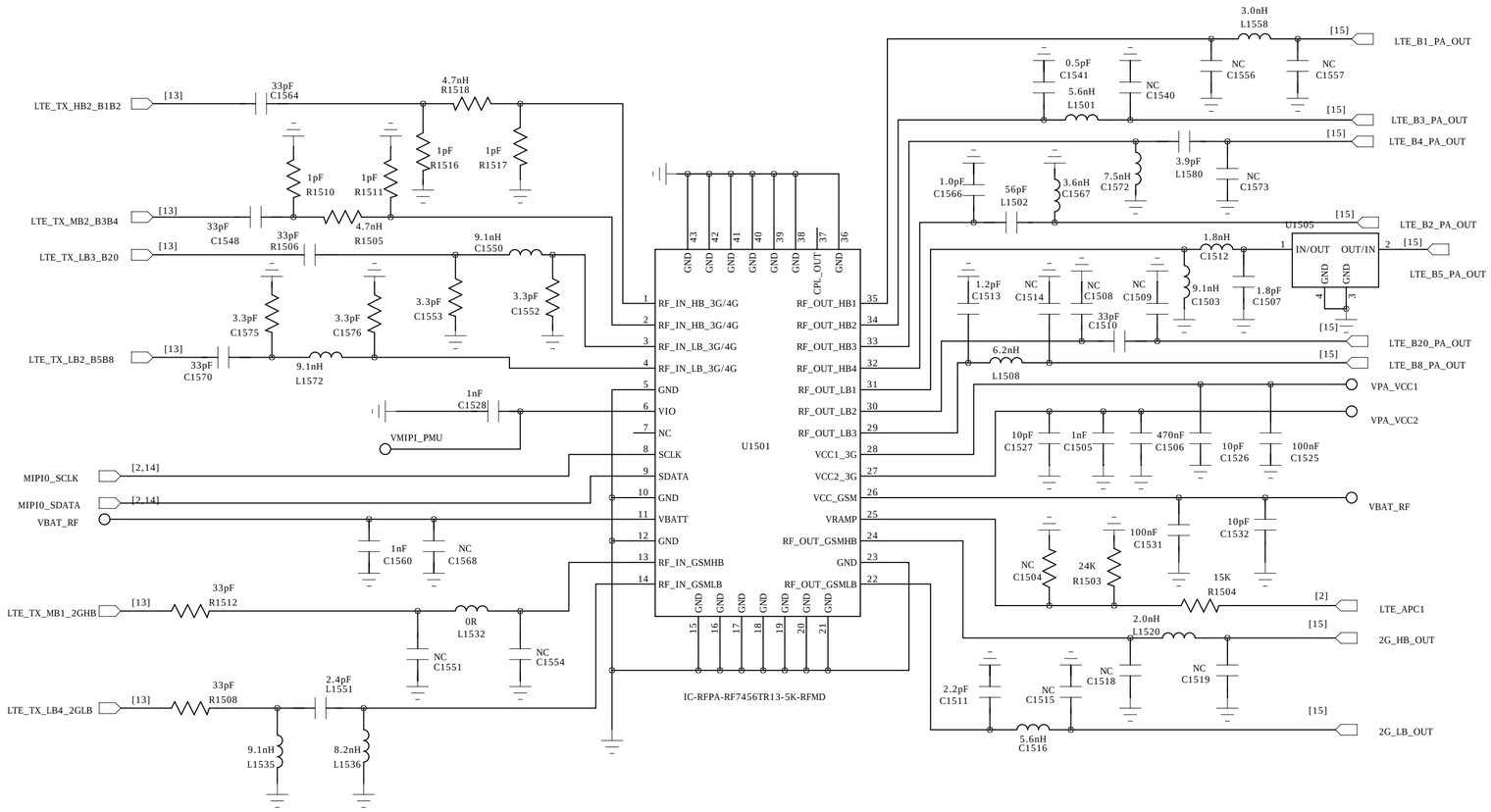

LTE B7 PA (ET capable, 2x2.5)

VCC1 and VCC2 should be connected behind bypass cap

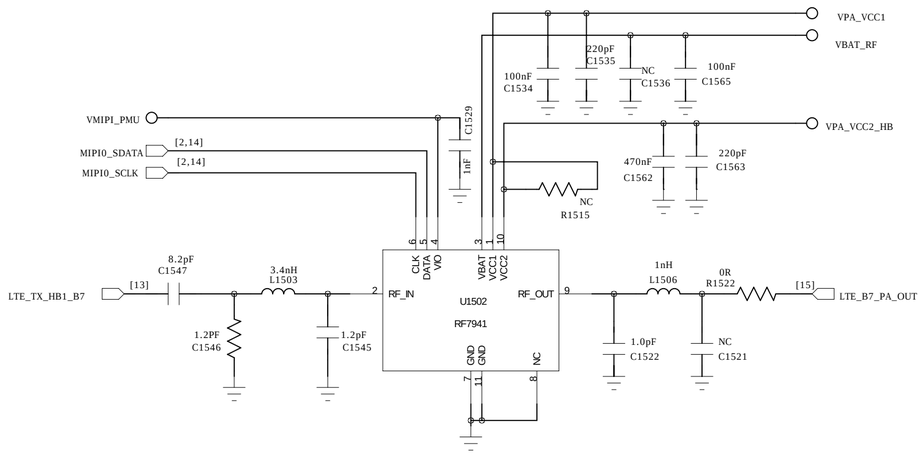

Power Net Connection

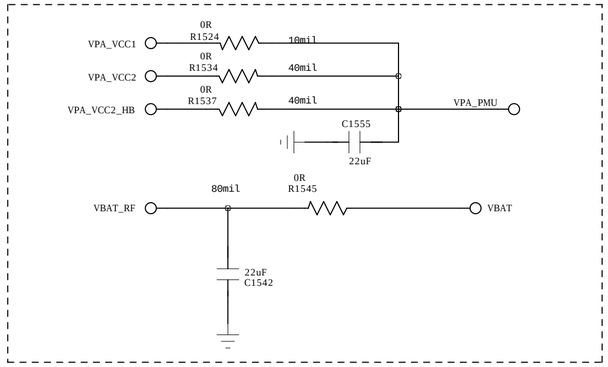

PA Power Trace Width
VPA_VCC1: 10mil
VPA_PMU, 50mil
VPA_VCC2, 40mil
VPA_VCC2_HB, 40mil
VCC_GSM : 80mil
VBATT : 40mil

COMPANY: 上海锐嘉科通信技术有限公司 Shanghai RagenTek Communication Technology Co.,Ltd				MODEL: J3026	Modified Date: 2014/10/9
DRAWN	WY	DATED	2014-06-16	TITLE: 15_RF7456+RF7941	VERSION: V1.0 / SHEET: 14 OF 17
CHECKED	Wu Xu	DATED	< >		

REVISION RECORD			
LTR	ECO NO:	APPROVED:	DATE:

B1/B2/B3/B5/B7/B8/B20 TRX

B1/B2 TRX

B1Ê ¹ ÓÃSAYRF1G95HQ0F0A Á Ï º ÅG1152014067LA
B2Ê ¹ ÓÃSAYRJ1G88CE0B0A Á Ï º ÅG1152014062LA

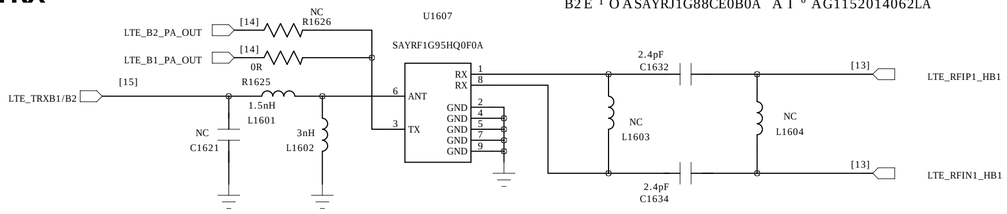

B3/B4 TRX

B3Ê ¹ ÓÃSAYFH1G74CA0B0A Á Ï º ÅG1152014061LA
B4Ê ¹ ÓÃB39212B8563P810 Á Ï º ÅG1152014087LA

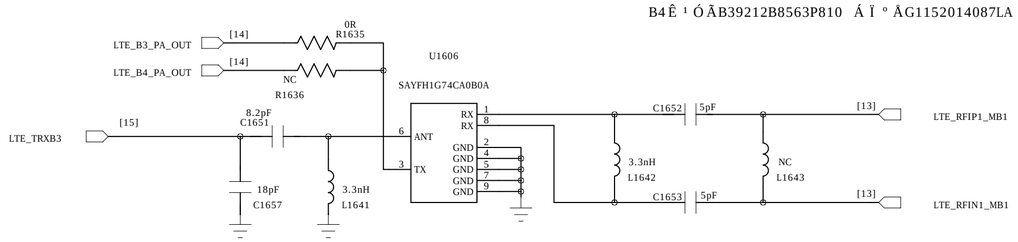

B7 TRX

G1152014104LA

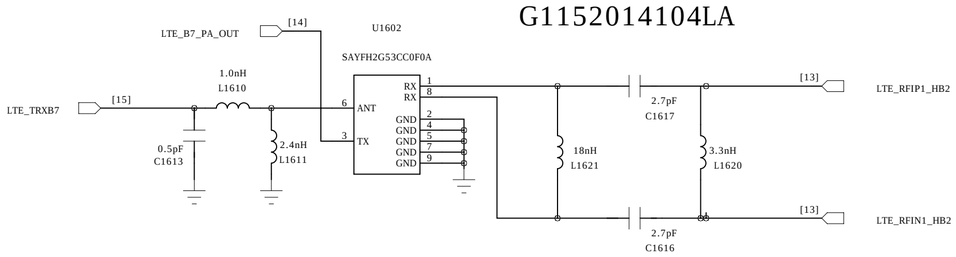

B20 TRX

G2715020016LA

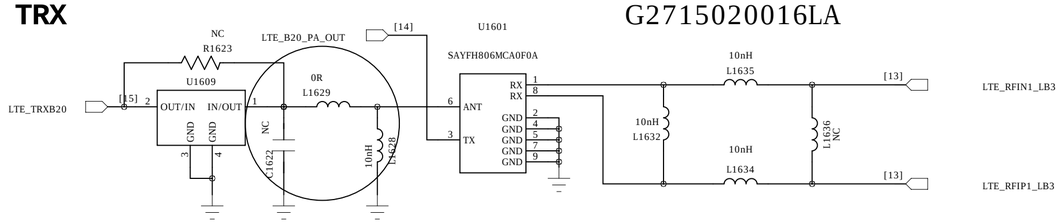

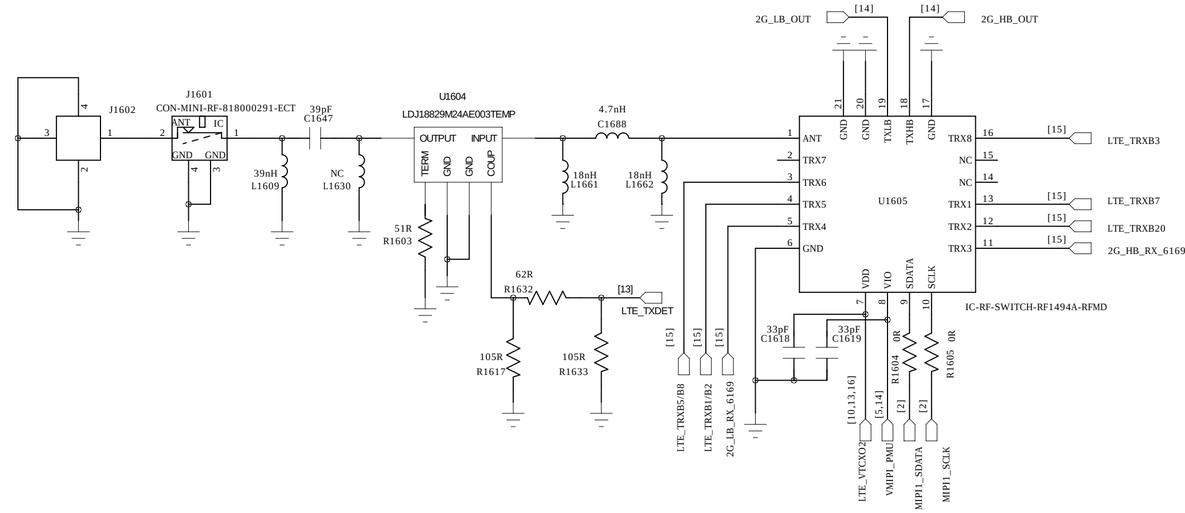

B5/B8 TRX

B5ÓÃSAYFH836MCC0F0A Á Ï º ÅG1152014068LA
B8ÓÃSAYFP897MCA0B00 Á Ï º ÅG1152014080LA

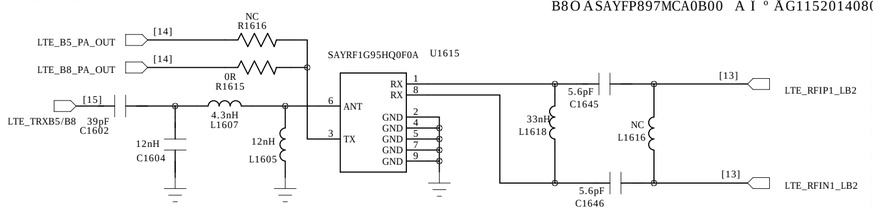

GSM850/900_RX_SAW

GSM850ÓÃSAFFB881MFM0F0A Á Ï º ÅG1180040118LA
GSM900ÓÃSAFFB942MFL0F0A Á Ï º ÅG1180040134LA

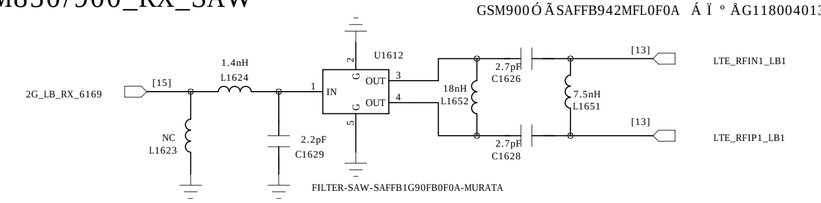

DCS1800/PCS1900_RX_SAW

DCS1800ÓÃSAFFB1G84FL0F0A Á Ï º ÅG1180080013LA
PCS1900ÓÃSAFFB1G96FN0F0A Á Ï º ÅG1180040136LA

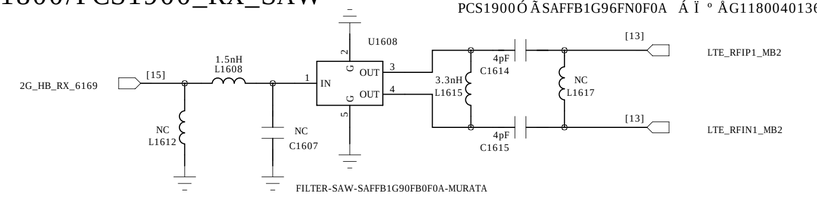

COMPANY: Shanghai Ragentek Intelligent Technology Limited				MODEL: J3026	2014/10/9
DRAWN	WY	DATED	2014-06-16	TITLE: 16_PRX	Modified Date:
CHECKED	Wu Xu	DATED	< >		VERSION: V1.0 SHEET: 15 OF 17

REVISION RECORD			
LTR	ECO NO:	APPROVED:	DATE:

LTE DRX_B1/B3/B7/B20

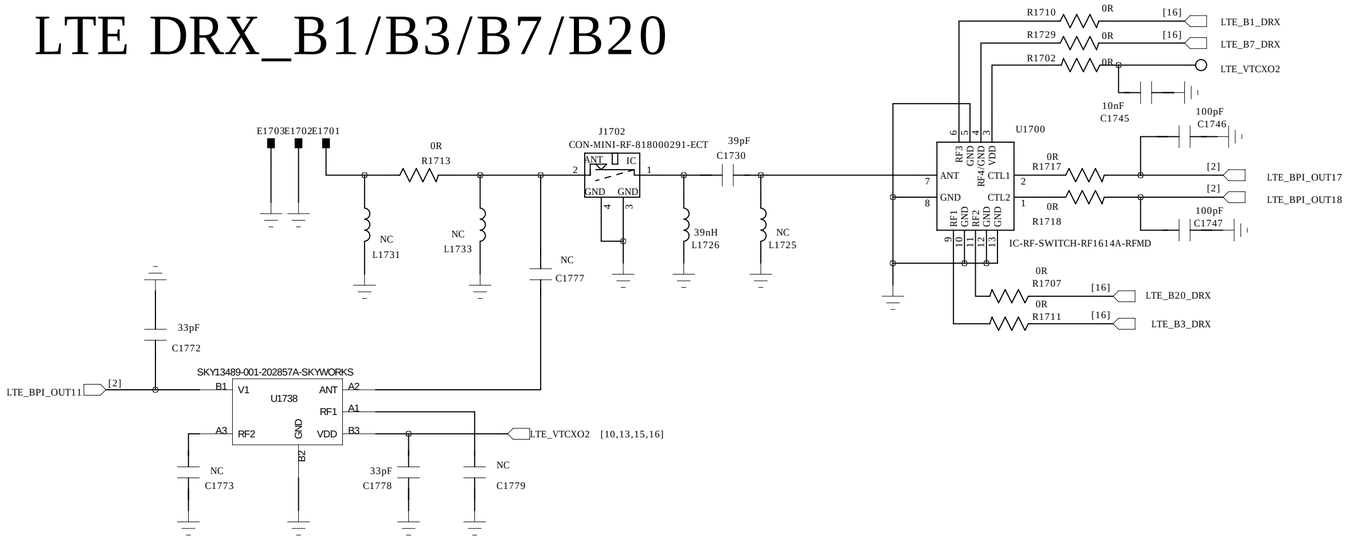

B1 DRX

G1180040117LA

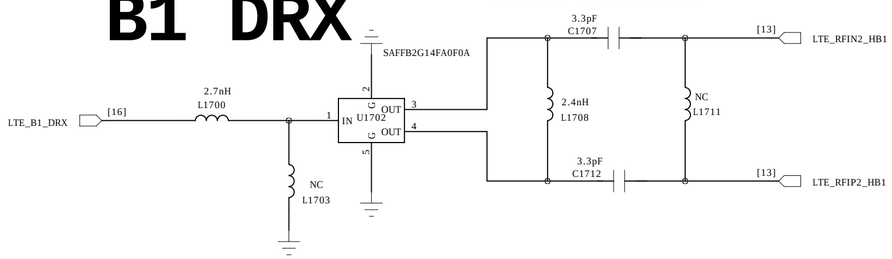

B7 DRX

G1180040135LA

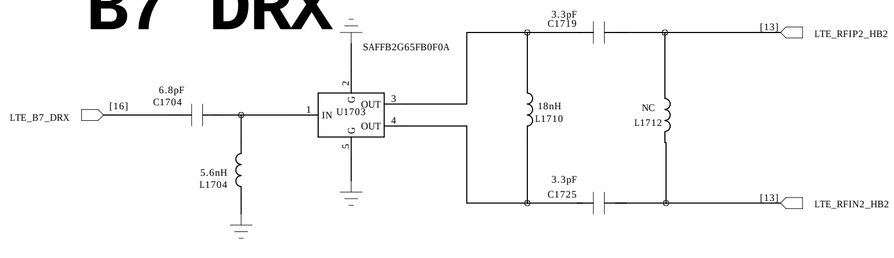

B3 DRX

G1180080013LA

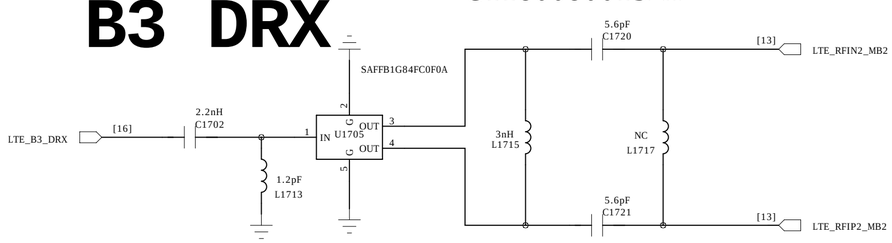

B20 DRX

G2715020015LA

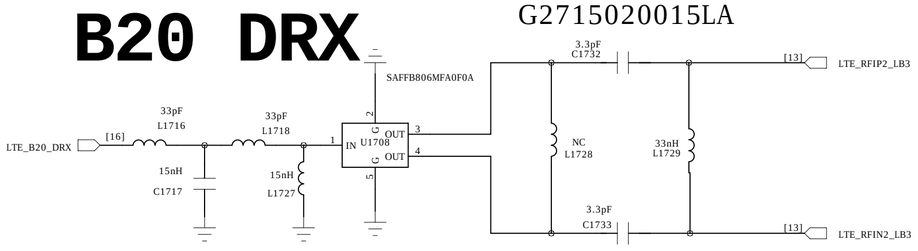

COMPANY: 上海锐嘉科通信技术有限公司 Shanghai RagenTek Communication Technology Co.,Ltd				MODEL: J3026	Modified Date: 2014/10/9
DRAWN	WY	DATED	2014-06-16	TITLE: 17_DRX	VERSION: V1.0 / SHEET: 16
CHECKED	Wu Xu	DATED	< >		

REVISION RECORD			
LTR	ECO NO:	APPROVED:	DATE

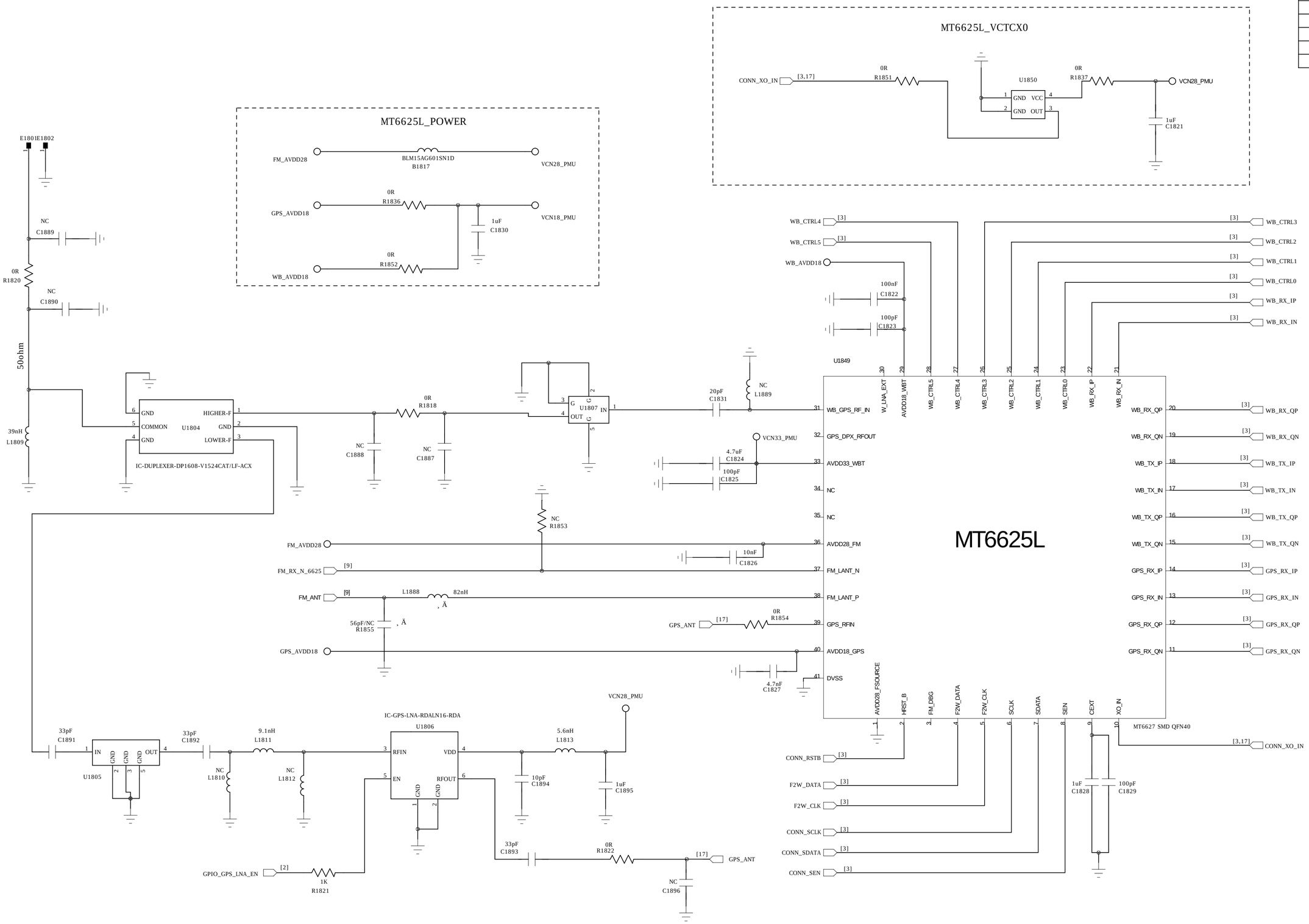

SH1 SH-BB-J3026 SH2 SH-RF-J3026 SH3 SH-GPS-J3026 SH4 SH-RF2-J3026

COMPANY: 上海锐嘉科通信技术有限公司 Shanghai RagenTek Communication Technology Co.,Ltd		MODEL: J3026	Modified Date: 2014/10/9
DRAWN WY	DATED 2014-06-16	TITLE: 18_MT6625L	VERSION: V1.0 SHEET: 17
CHECKED Wu Xu	DATED < >		