Project : MT6735 REF_SCH TOP LEVEL

REVISION RECORD			
LTR	ECO NO:	APPROVED:	DATE:

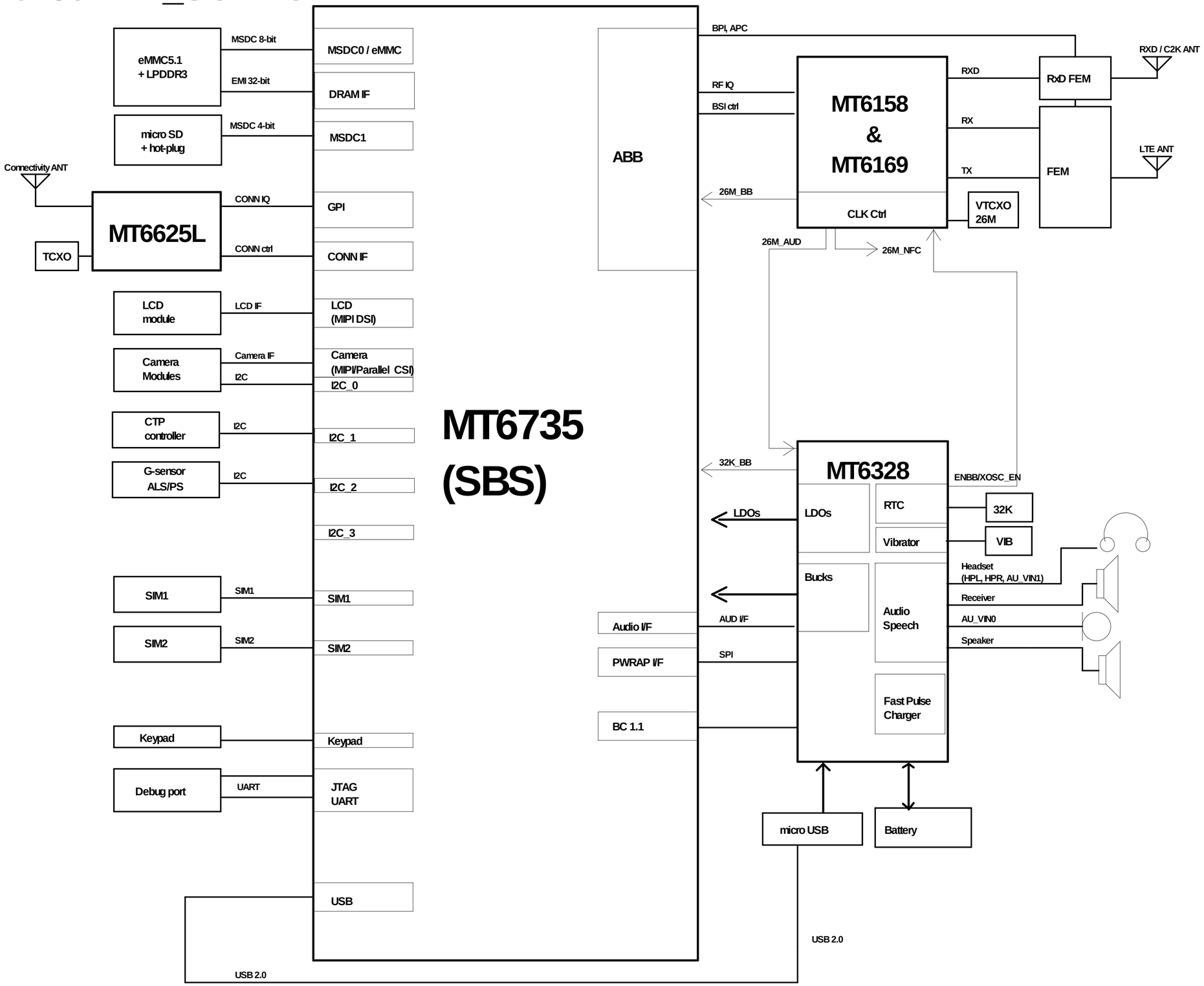

COMPANY: Shanghai ReallyTek Information Technology Co.,Ltd				MODEL: H536	Modified Date: 2016-6-12
DRAWN	YQY	DATED	20160321	TITLE: 00_BLOCK_DIAGRAM	VERSION: V2.2 / SHEET: 1 OF 20
CHECKED	< >	DATED	< >		

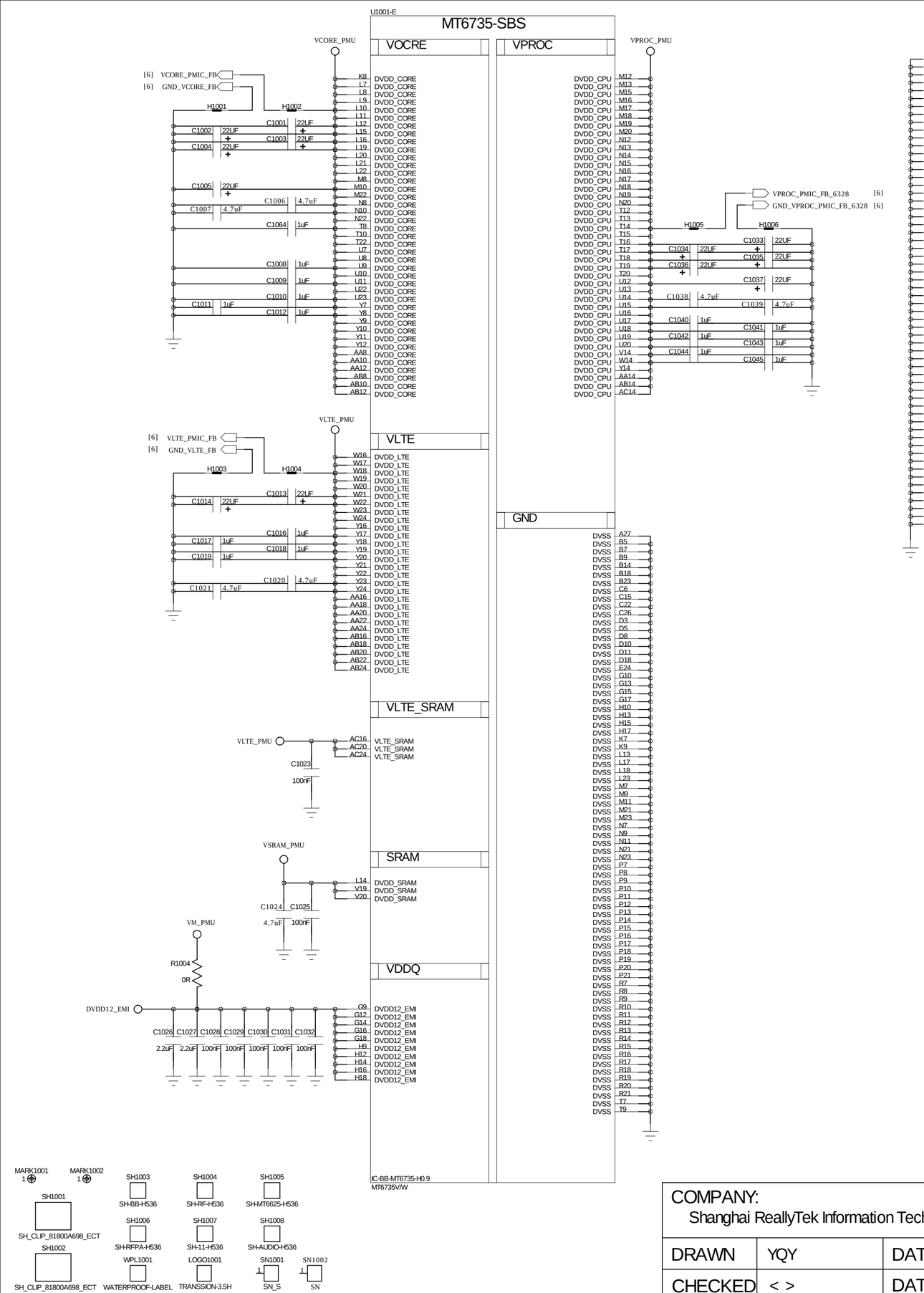

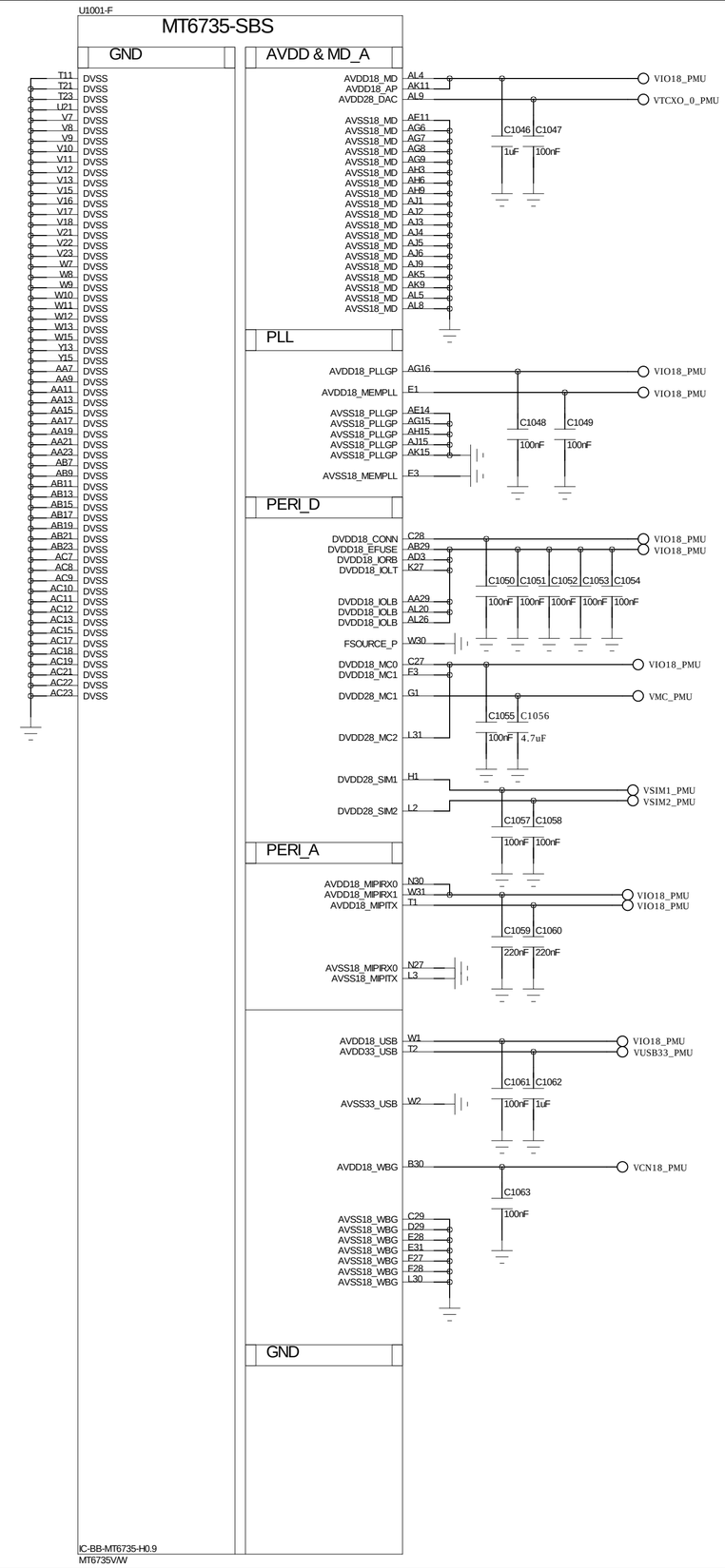

REVISION RECORD

LTR	ECO NO:	APPROVED:	DATE:

COMPANY: Shanghai ReallyTek Information Technology Co.,Ltd				MODEL: H536	Modified Date: 2016-6-12	
DRAWN	YQY	DATED	20160321	TITLE: 10_BB_POWER	VERSION: V2.2	SHEET: 2 OF 20
CHECKED	< >	DATED	< >			

REVISION RECORD			
LTR	ECO NO:	APPROVED:	DATE:

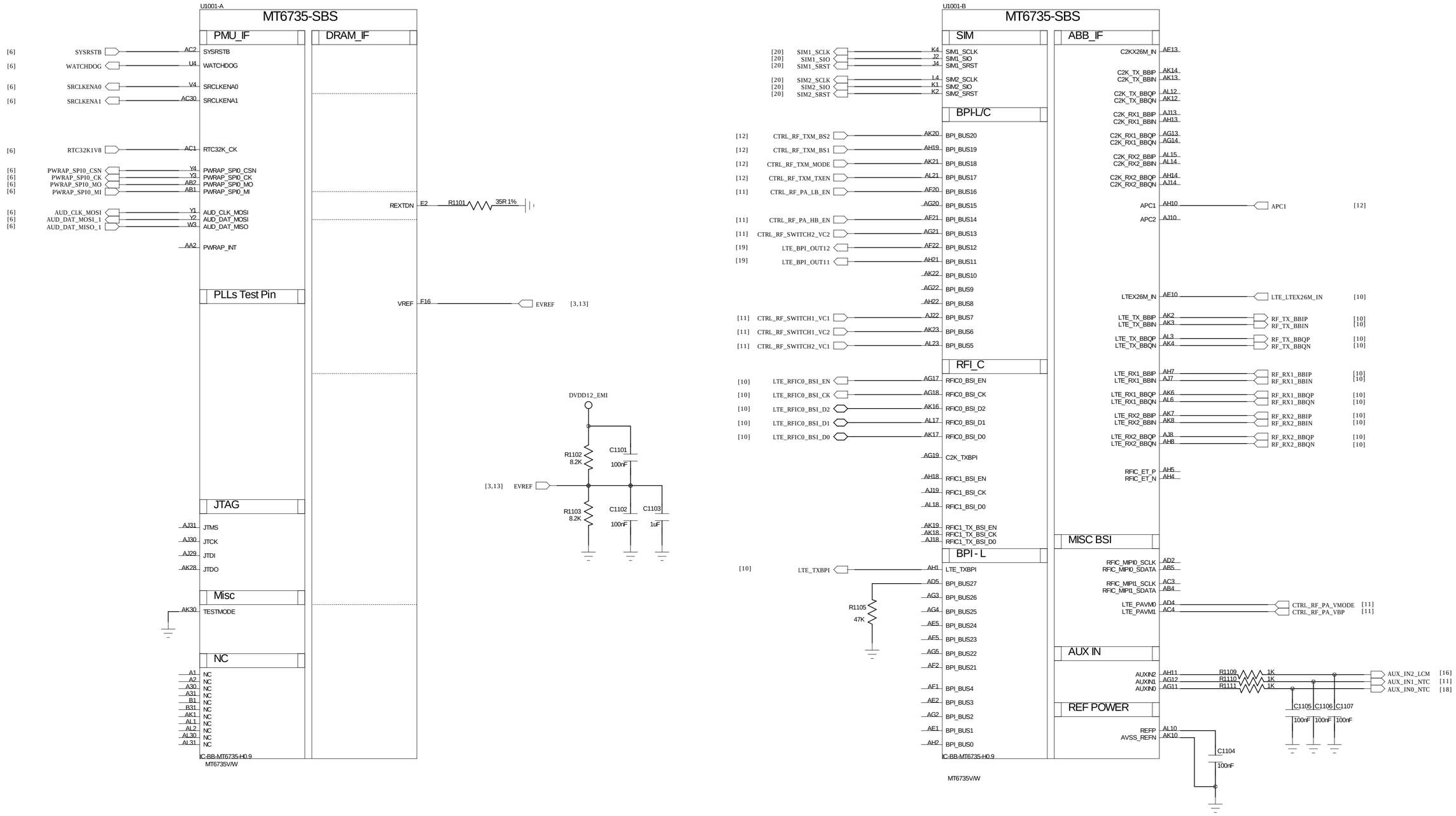

COMPANY: Shanghai ReallyTek Information Technology Co.,Ltd				MODEL: H536	Modified Date: 2016-6-12
DRAWN	YQY	DATED	20160321	TITLE: 11_BB_I	VERSION: V2.2 / SHEET: 3 OF 20
CHECKED	< >	DATED	< >		

REVISION RECORD			
LTR	ECO NO:	APPROVED:	DATE:

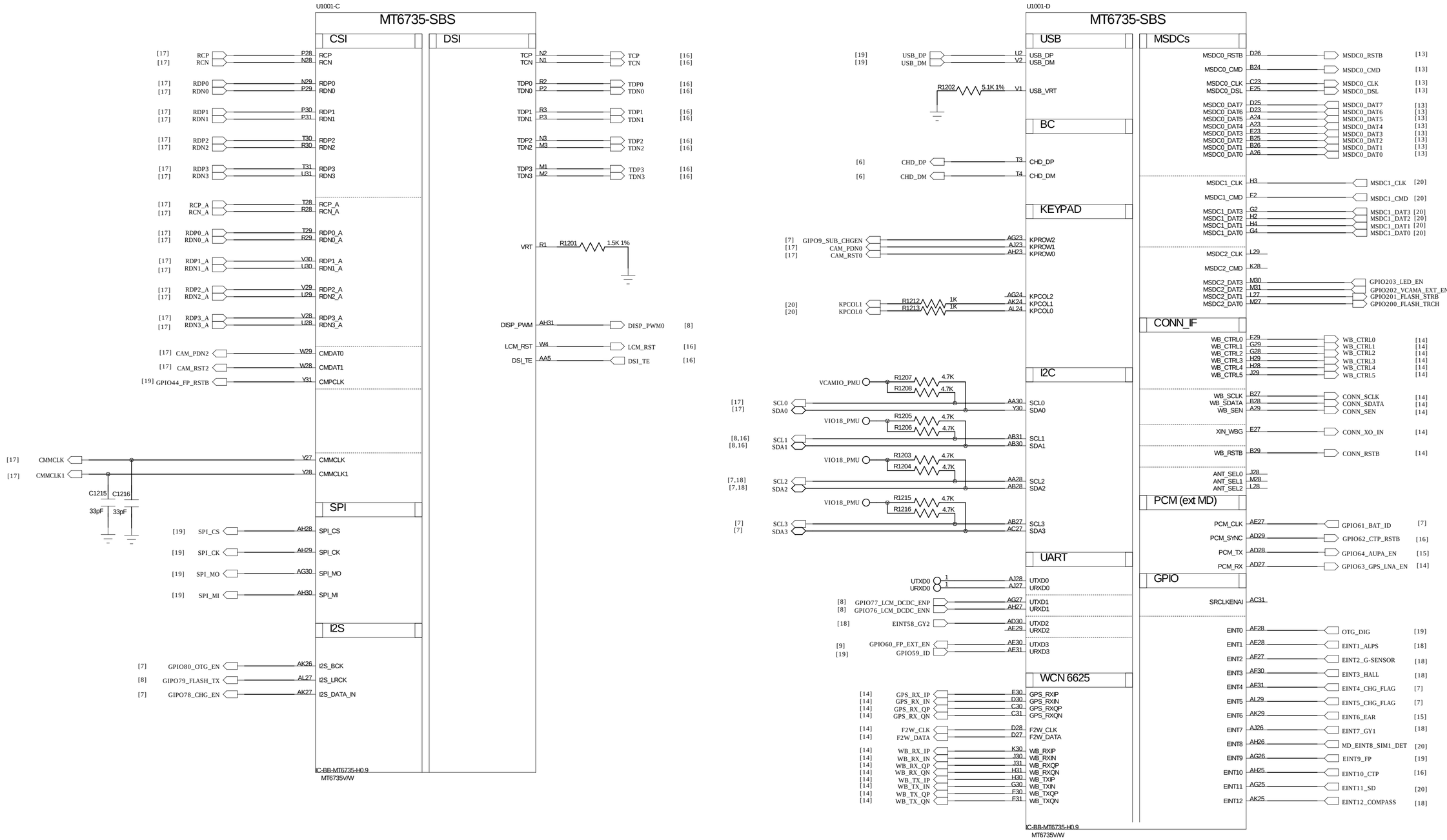

COMPANY: Shanghai ReallyTek Information Technology Co.,Ltd				MODEL: H536	Modified Date: 2016-6-12
DRAWN	YQY	DATED	20160321	TITLE: 12_BB_II	VERSION: V2.2 / SHEET: 4 OF 20
CHECKED	< >	DATED	< >		

REVISION RECORD			
LTR	ECO NO:	APPROVED:	DATE:

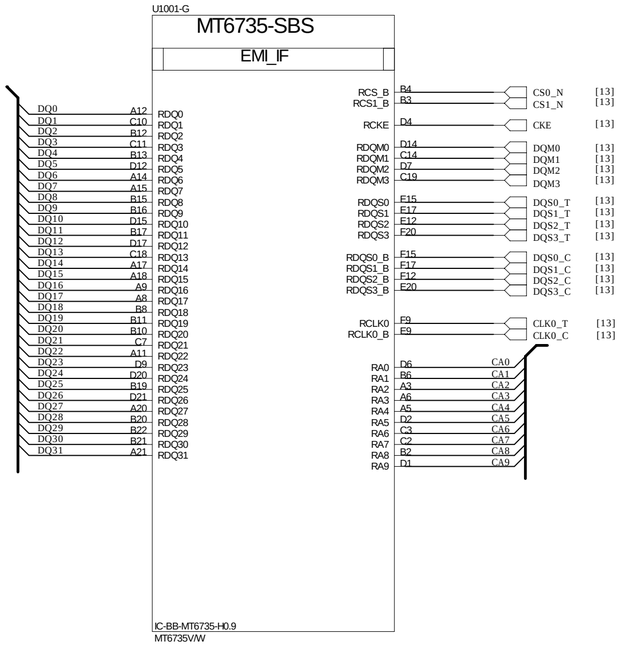

COMPANY: Shanghai ReallyTek Information Technology Co.,Ltd				MODEL: H536	Modified Date: 2016-6-12
DRAWN	YQY	DATED	20160321	TITLE: 13_BB_III	VERSION: V2.2 / SHEET: 5 OF 20
CHECKED	< >	DATED	< >		

REVISION RECORD			
LTR	ECO NO:	APPROVED:	DATE:

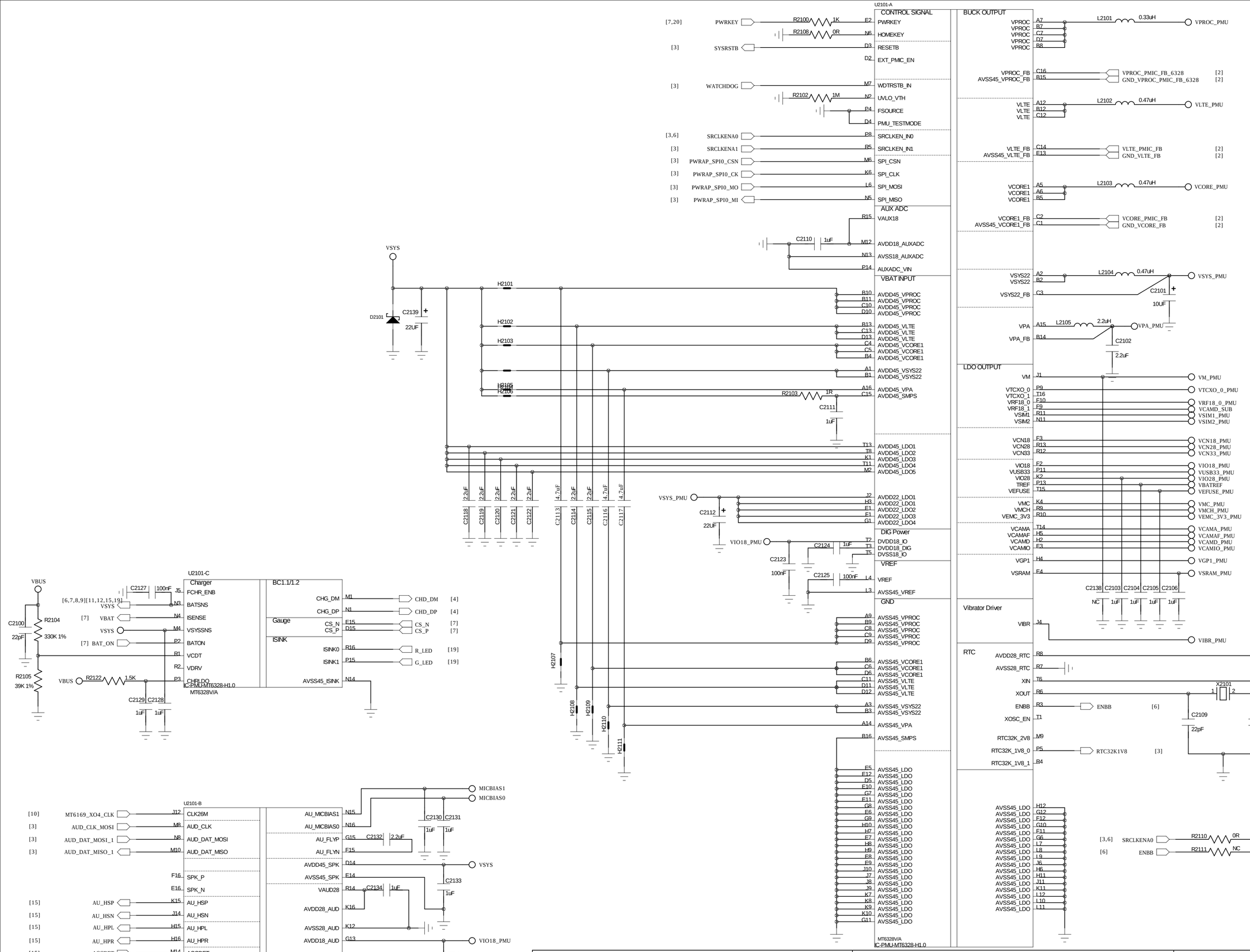

COMPANY: Shanghai ReallyTek Information Technology Co.,Ltd		MODEL: H536	Modified Date: 2016-6-12
DRAWN YQY	DATED 20160321	TITLE: 21_POWER_MT6328	VERSION: V2.2 / SHEET: 6 OF 20
CHECKED < >	DATED < >		

REVISION RECORD			
LTR	ECO NO:	APPROVED:	DATE:

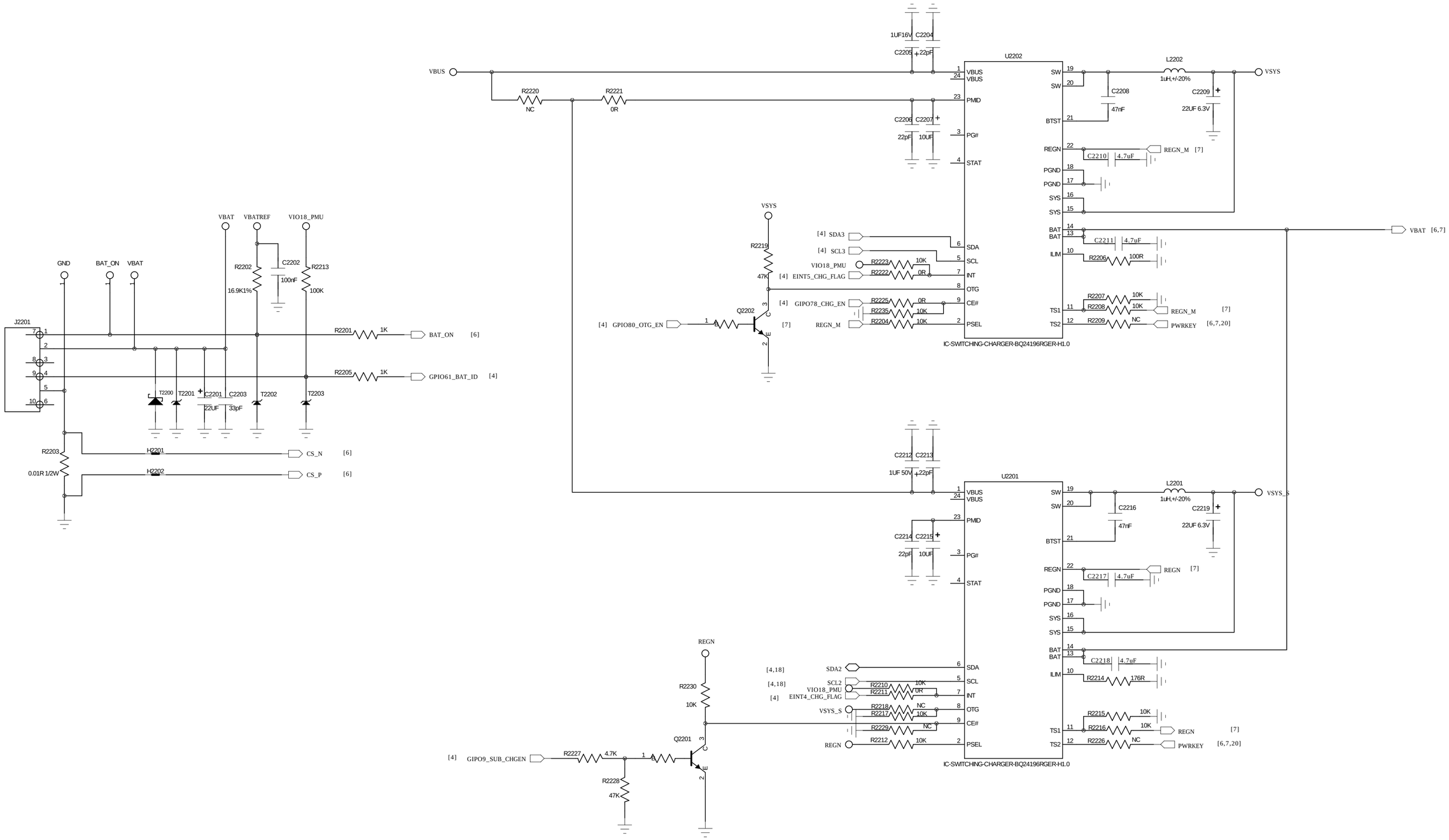

COMPANY: Shanghai ReallyTek Information Technology Co.,Ltd				MODEL: H536	Modified Date: 2016-6-12	
DRAWN	YQY	DATED	20160321	TITLE: 22_POWER_CHG	VERSION: V2.2	SHEET: 7 OF 20
CHECKED	< >	DATED	< >			

REVISION RECORD			
LTR	ECO NO:	APPROVED:	DATE:

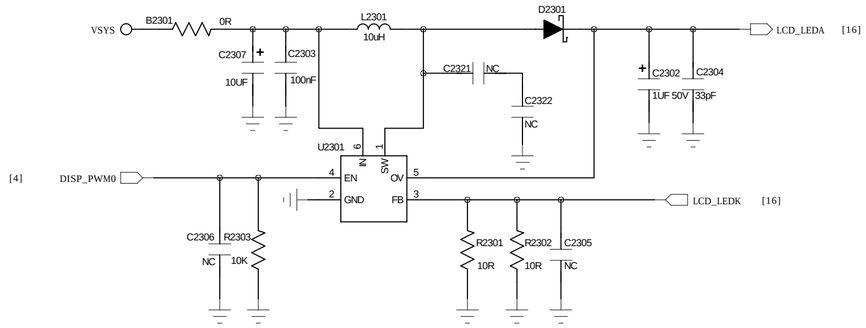

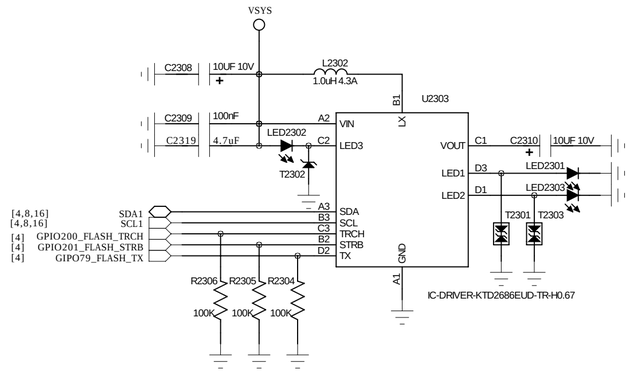

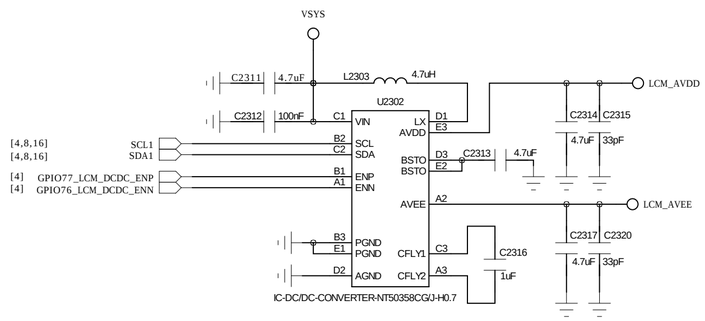

COMPANY: Shanghai ReallyTek Information Technology Co.,Ltd				MODEL: H536	Modified Date: 2016-6-12
DRAWN	YQY	DATED	20160321	TITLE: 23_POWER_THIRD-PARTY_I	VERSION: V2.2 / SHEET: 8 OF 20
CHECKED	< >	DATED	< >		

REVISION RECORD			
LTR	ECO NO:	APPROVED:	DATE:

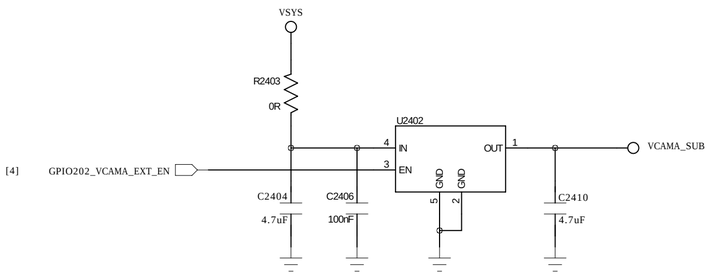

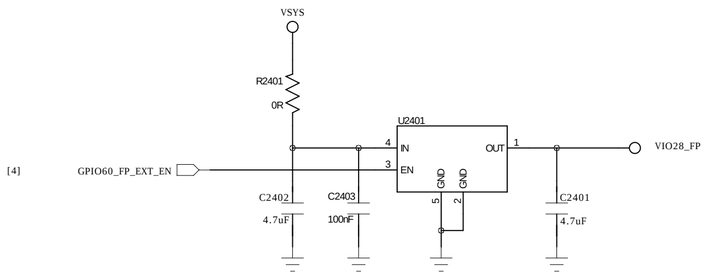

COMPANY: Shanghai ReallyTek Information Technology Co.,Ltd				MODEL: H536	Modified Date: 2016-6-12
DRAWN	YQY	DATED	20160321	TITLE: 24_POWER_THIRD-PARTY_II	VERSION: V2.2 / SHEET: 9 OF 20
CHECKED	< >	DATED	< >		

REVISION RECORD			
LTR	ECO NO:	APPROVED:	DATE:

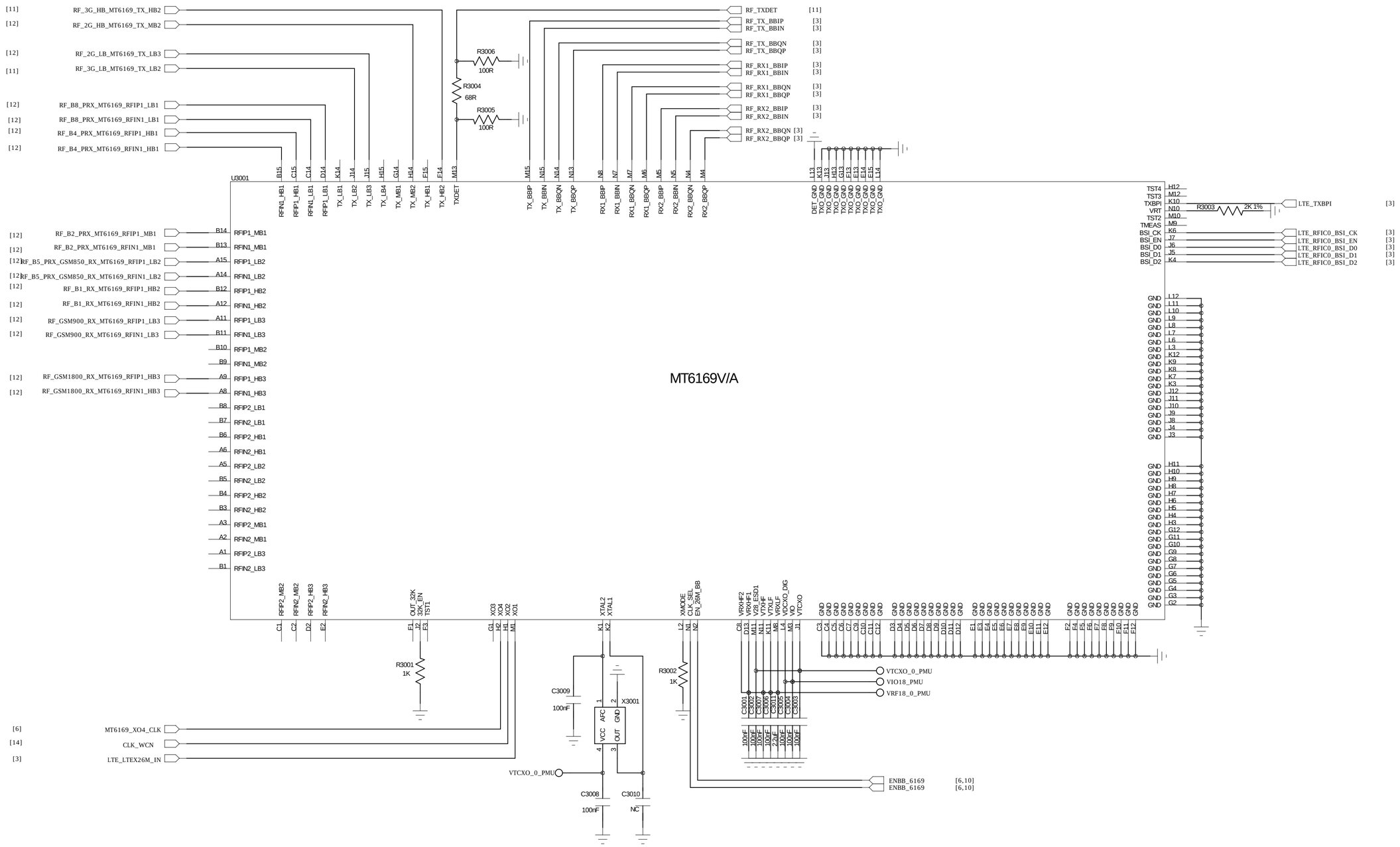

COMPANY: Shanghai ReallyTek Information Technology Co.,Ltd				MODEL: H536	Modified Date: 2016-6-12	
DRAWN	YQY	DATED	20160321	TITLE: 30_RF_MT6169_PIN_OUT	VERSION: V2.2	SHEET: 10 OF 20
CHECKED	< >	DATED	< >			

REVISION RECORD			
LTR	ECO NO:	APPROVED:	DATE:

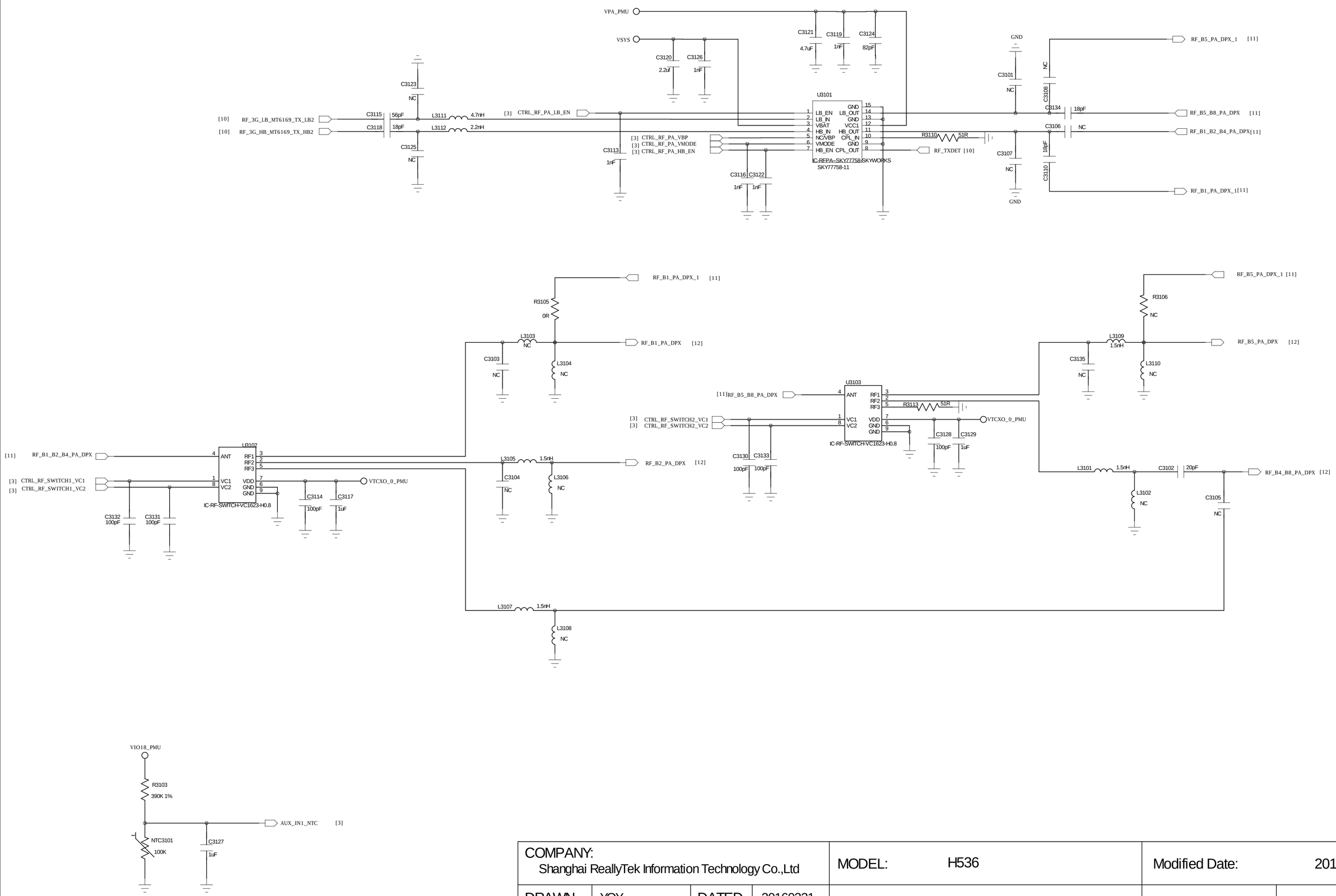

COMPANY: Shanghai ReallyTek Information Technology Co.,Ltd				MODEL: H536	Modified Date: 2016-6-12	
DRAWN	YQY	DATED	20160321	TITLE: 31_RF_MT6169_RF_TX	VERSION: V2.2	SHEET: 11 OF 20
CHECKED	< >	DATED	< >			

REVISION RECORD			
LTR	ECO NO:	APPROVED:	DATE:

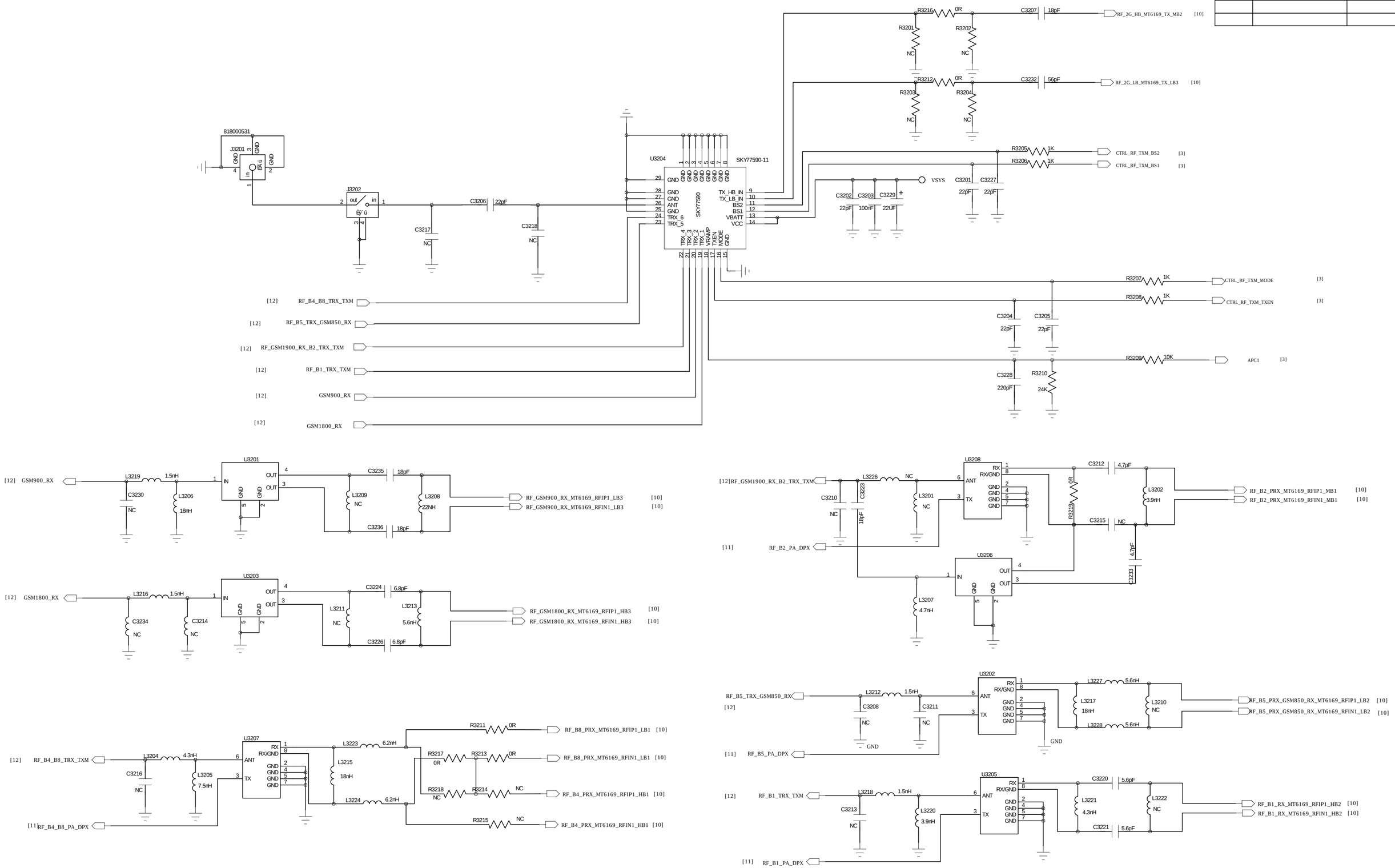

COMPANY: Shanghai ReallyTek Information Technology Co.,Ltd				MODEL: H536	Modified Date: 2016-6-12
DRAWN	YQY	DATED	20160321	TITLE: 32_RF_MT6169_RF_PRX	VERSION: V2.2 / SHEET: 12 OF 20
CHECKED	< >	DATED	< >		

REVISION RECORD			
LTR	ECO NO:	APPROVED:	DATE:

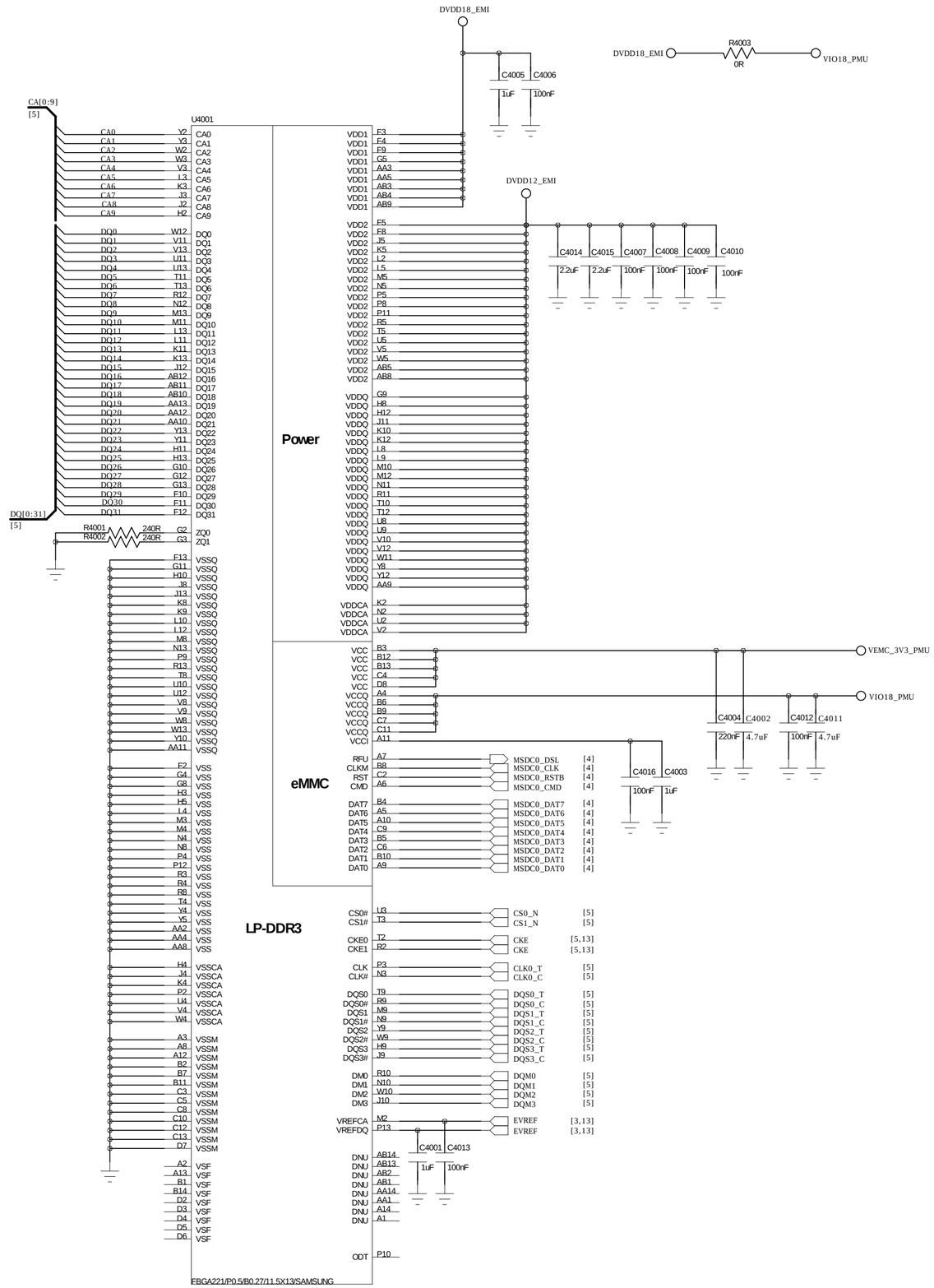

COMPANY: Shanghai ReallyTek Information Technology Co.,Ltd		MODEL: H536	Modified Date: 2016-6-12
DRAWN YQY	DATED 20160321	TITLE: 40_MEMORY_EMMC_LPDDR3	VERSION: V2.2 / SHEET: 13 OF 20
CHECKED < >	DATED < >		

REVISION RECORD			
LTR	ECO NO:	APPROVED:	DATE:

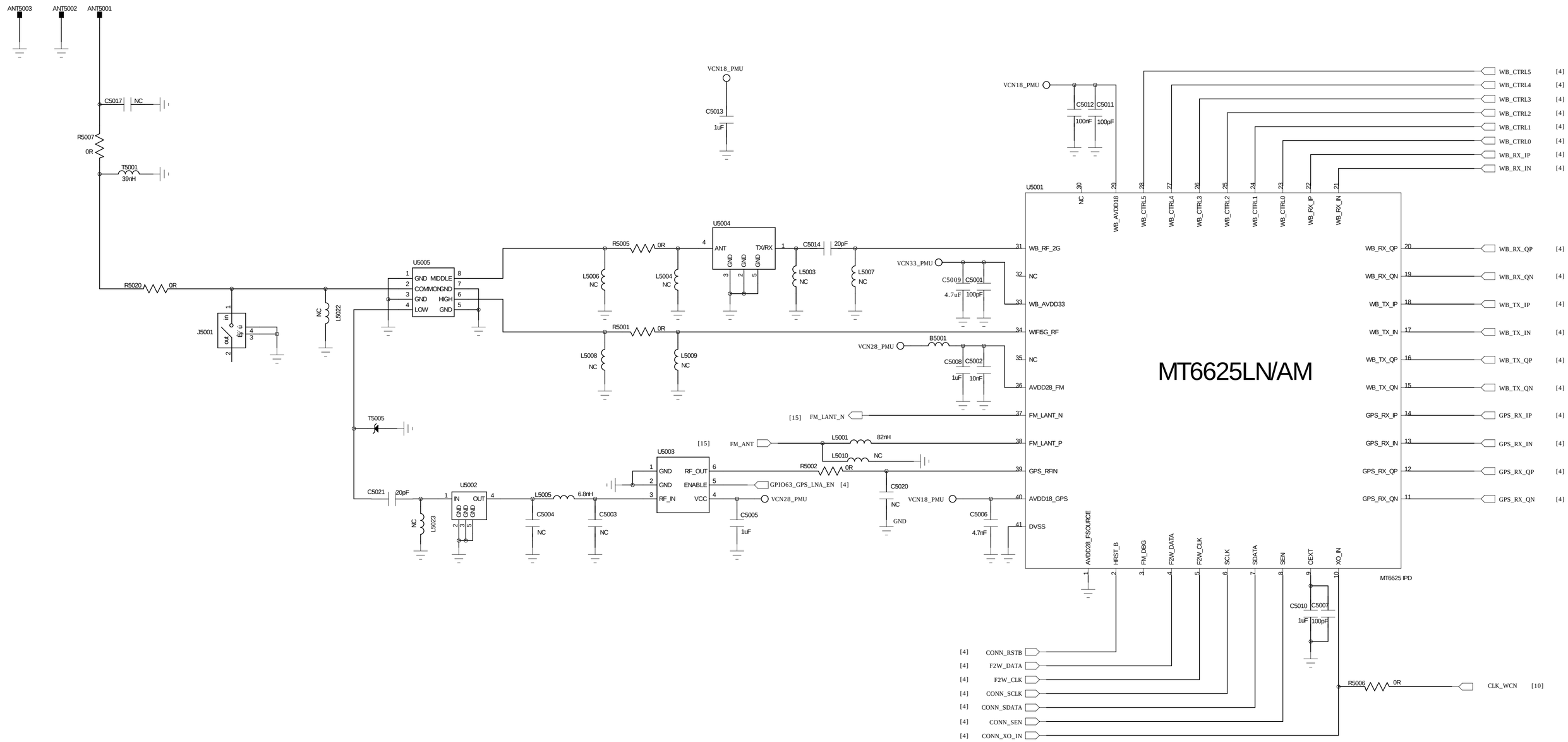

COMPANY: Shanghai ReallyTek Information Technology Co.,Ltd				MODEL: H536	Modified Date: 2016-6-12
DRAWN	YQY	DATED	20160321	TITLE: 50_CONNECTIVITY_MT6625	VERSION: V2.2 / SHEET: 14 OF 20
CHECKED	< >	DATED	< >		

REVISION RECORD			
LTR	ECO NO:	APPROVED:	DATE:

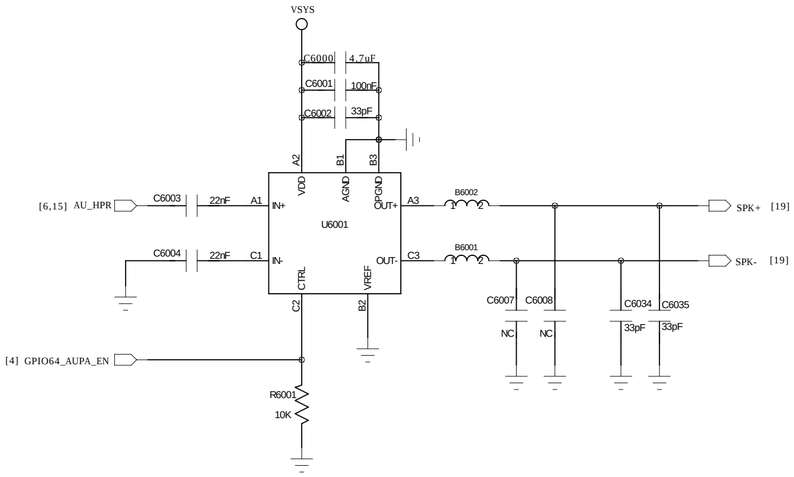

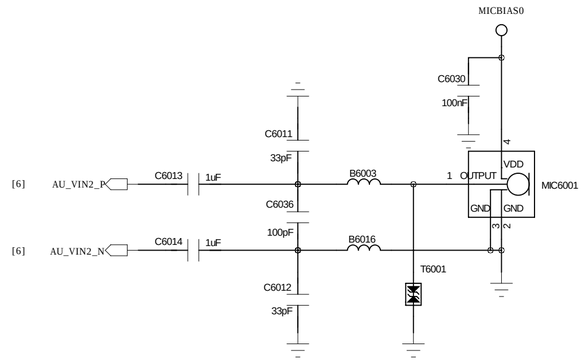

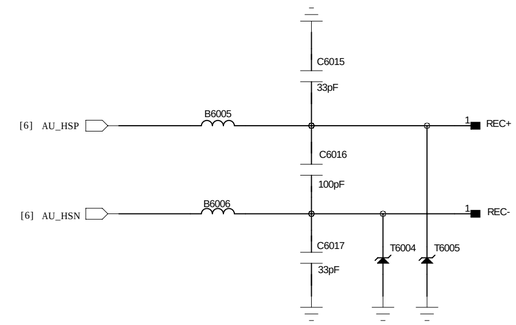

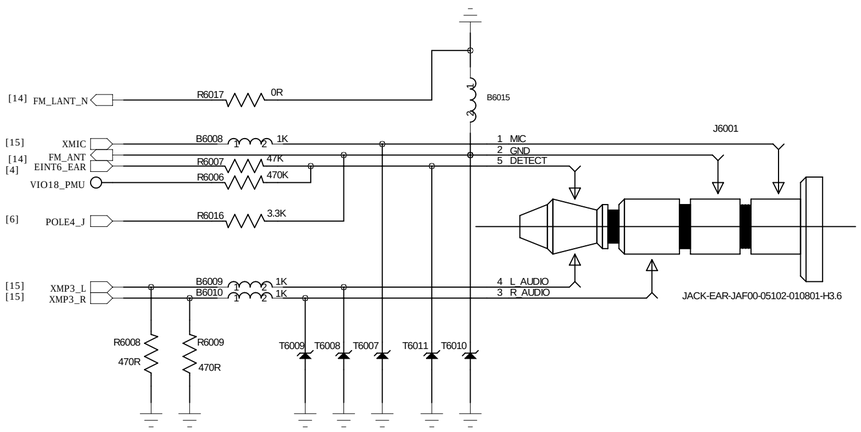

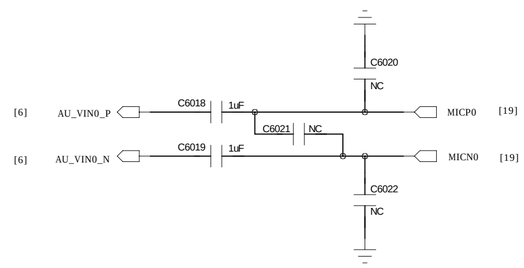

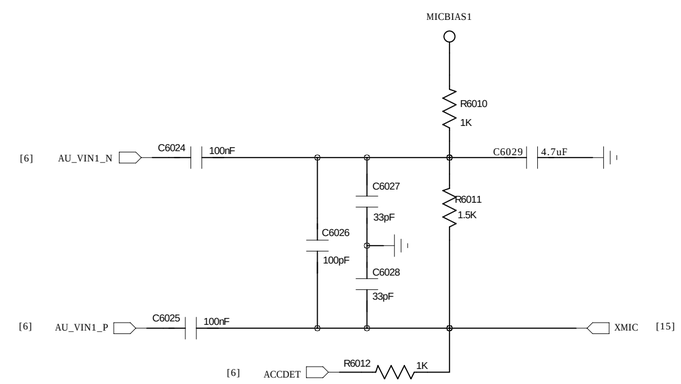

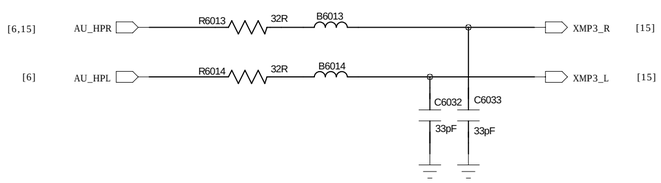

COMPANY: Shanghai ReallyTek Information Technology Co.,Ltd				MODEL: H536	Modified Date: 2016-6-12
DRAWN	YQY	DATED	20160321	TITLE: 60_PERI_AUDIO	VERSION: V2.2 / SHEET: 15 OF 20
CHECKED	< >	DATED	< >		

REVISION RECORD			
LTR	ECO NO:	APPROVED:	DATE:

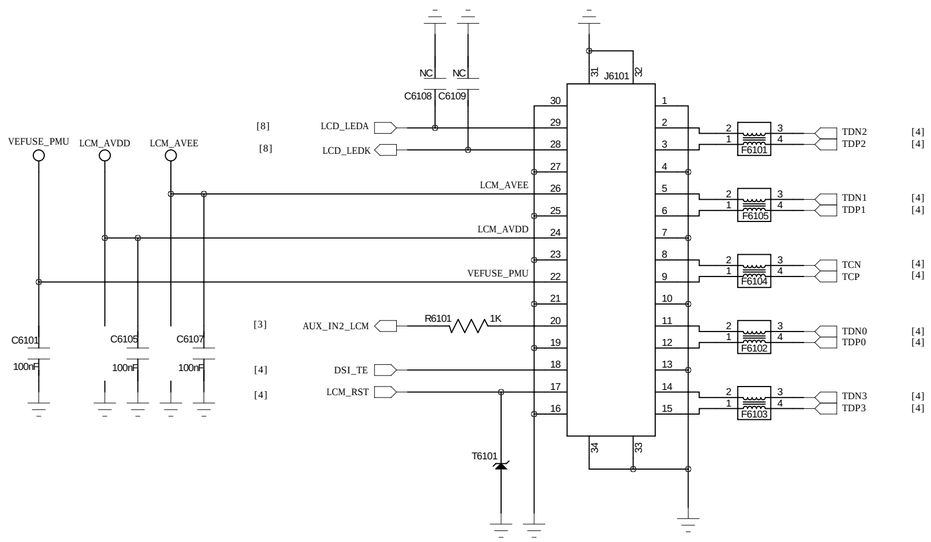

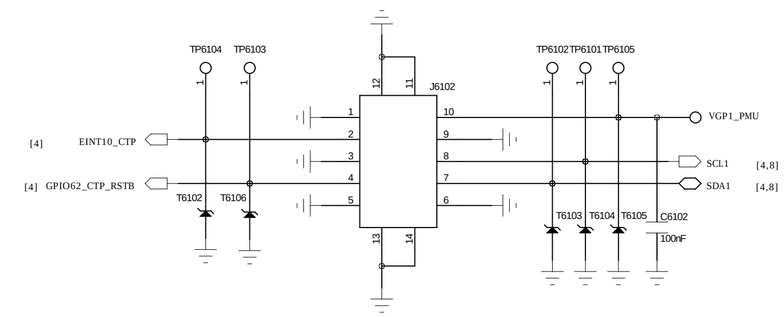

COMPANY: Shanghai ReallyTek Information Technology Co.,Ltd				MODEL: H536	Modified Date: 2016-6-12
DRAWN	YQY	DATED	20160321	TITLE: 61_PERI_LCD_CTP	VERSION: V2.2 / SHEET: 16 OF 20
CHECKED	< >	DATED	< >		

REVISION RECORD			
LTR	ECO NO:	APPROVED:	DATE:

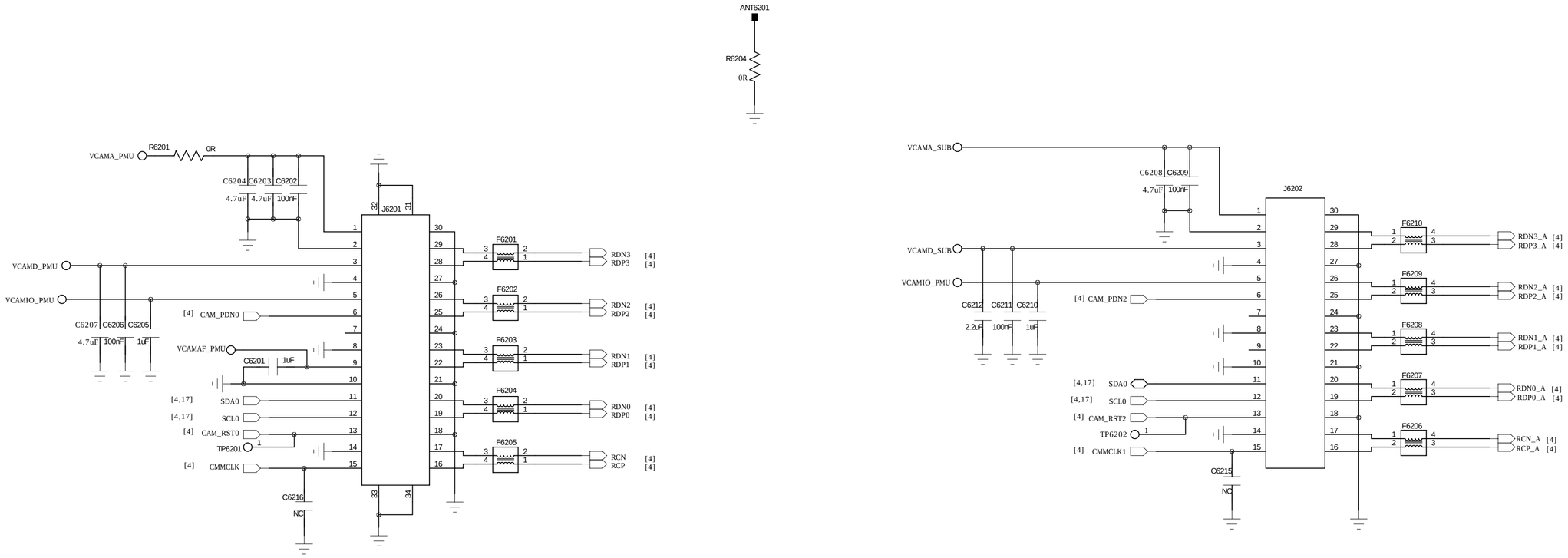

COMPANY: Shanghai ReallyTek Information Technology Co.,Ltd				MODEL: H536	Modified Date: 2016-6-12
DRAWN	YQY	DATED	20160321	TITLE: 62_PERI_CAMERA	VERSION: V2.2 / SHEET: 17 OF 20
CHECKED	< >	DATED	< >		

REVISION RECORD			
LTR	ECO NO:	APPROVED:	DATE:

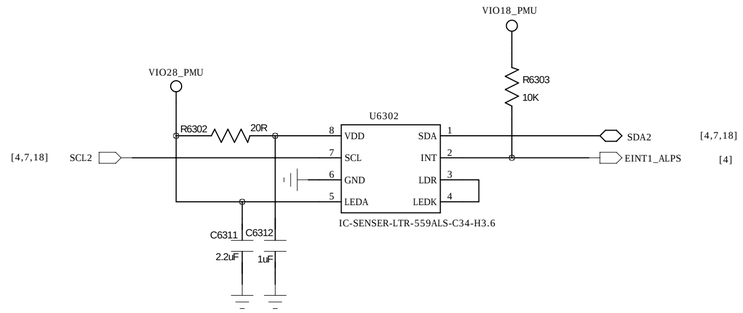

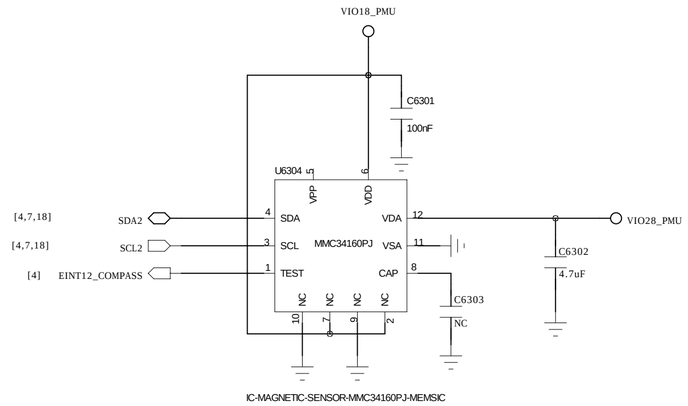

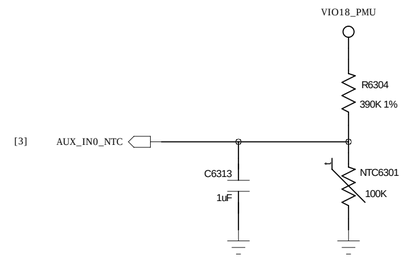

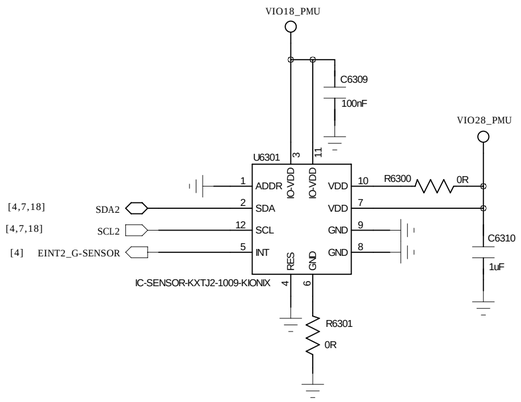

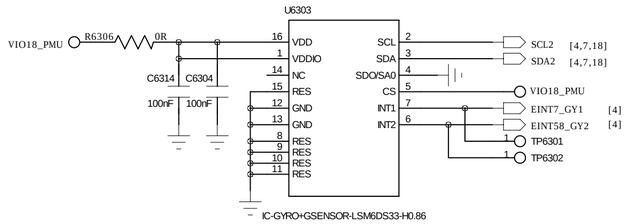

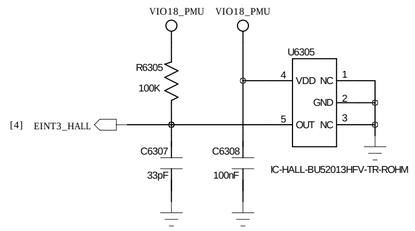

COMPANY: Shanghai ReallyTek Information Technology Co.,Ltd				MODEL: H536	Modified Date: 2016-6-12
DRAWN	YQY	DATED	20160321	TITLE: 63_PERI_SENSORS	VERSION: V2.2 / SHEET: 18 OF 20
CHECKED	< >	DATED	< >		

REVISION RECORD			
LTR	ECO NO:	APPROVED:	DATE:

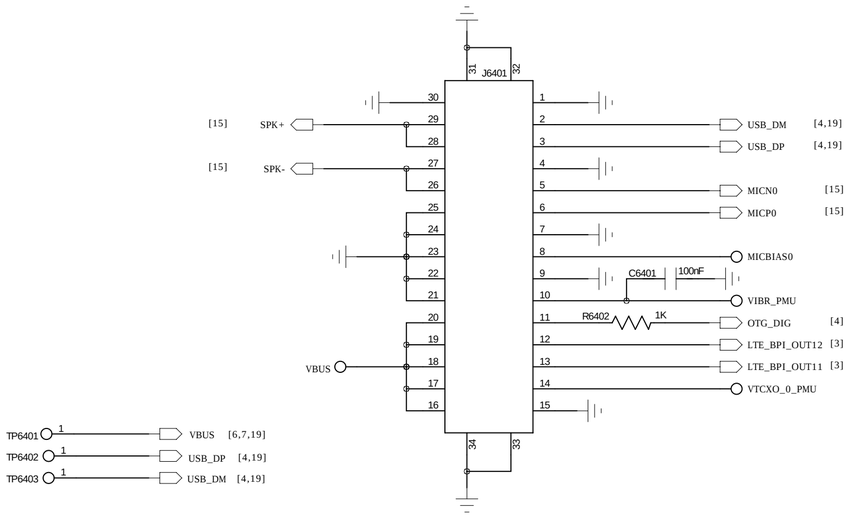

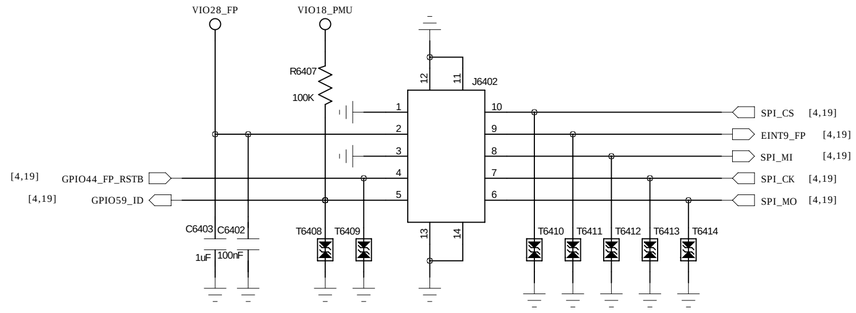

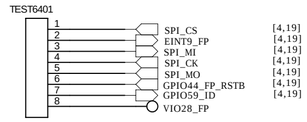

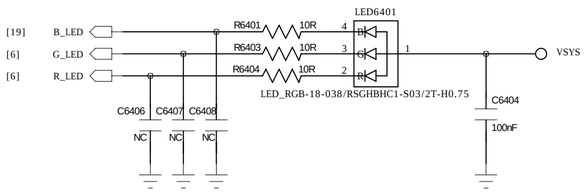

COMPANY: Shanghai ReallyTek Information Technology Co.,Ltd				MODEL: H536	Modified Date: 2016-6-12
DRAWN	YQY	DATED	20160321	TITLE: 64_PERI_EXCH_FP	VERSION: V2.2 / SHEET: 19 OF 20
CHECKED	< >	DATED	< >		

REVISION RECORD			
LTR	ECO NO:	APPROVED:	DATE:

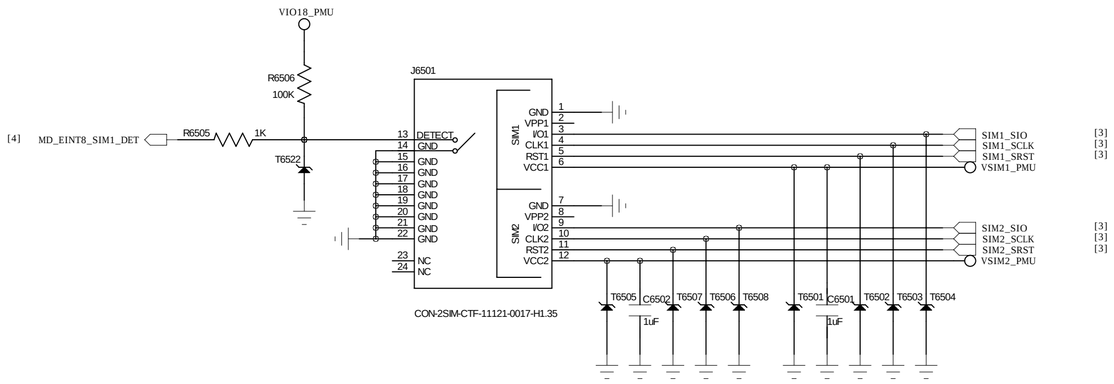

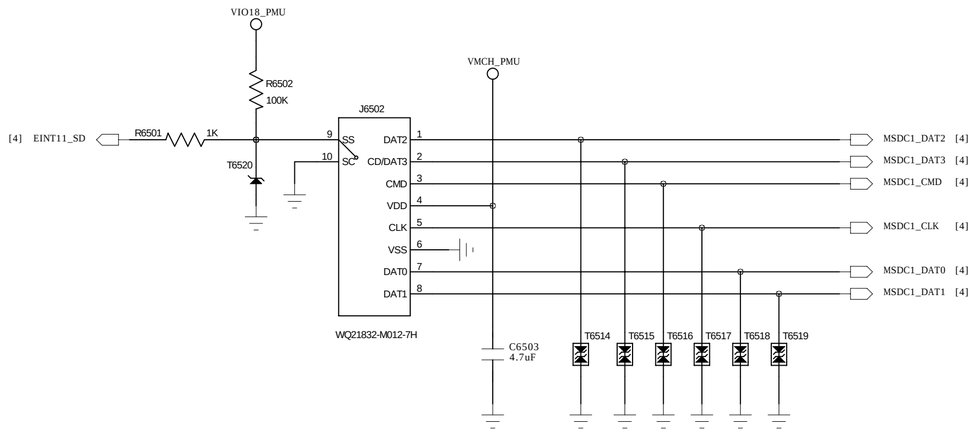

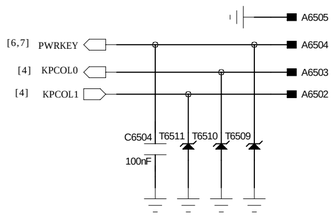

COMPANY: Shanghai ReallyTek Information Technology Co.,Ltd				MODEL: H536	Modified Date: 2016-6-12
DRAWN	YQY	DATED	20160321	TITLE: 65_PER_SIMI_KEYPAD	VERSION: V2.2 / SHEET: 20 OF 20
CHECKED	< >	DATED	< >		