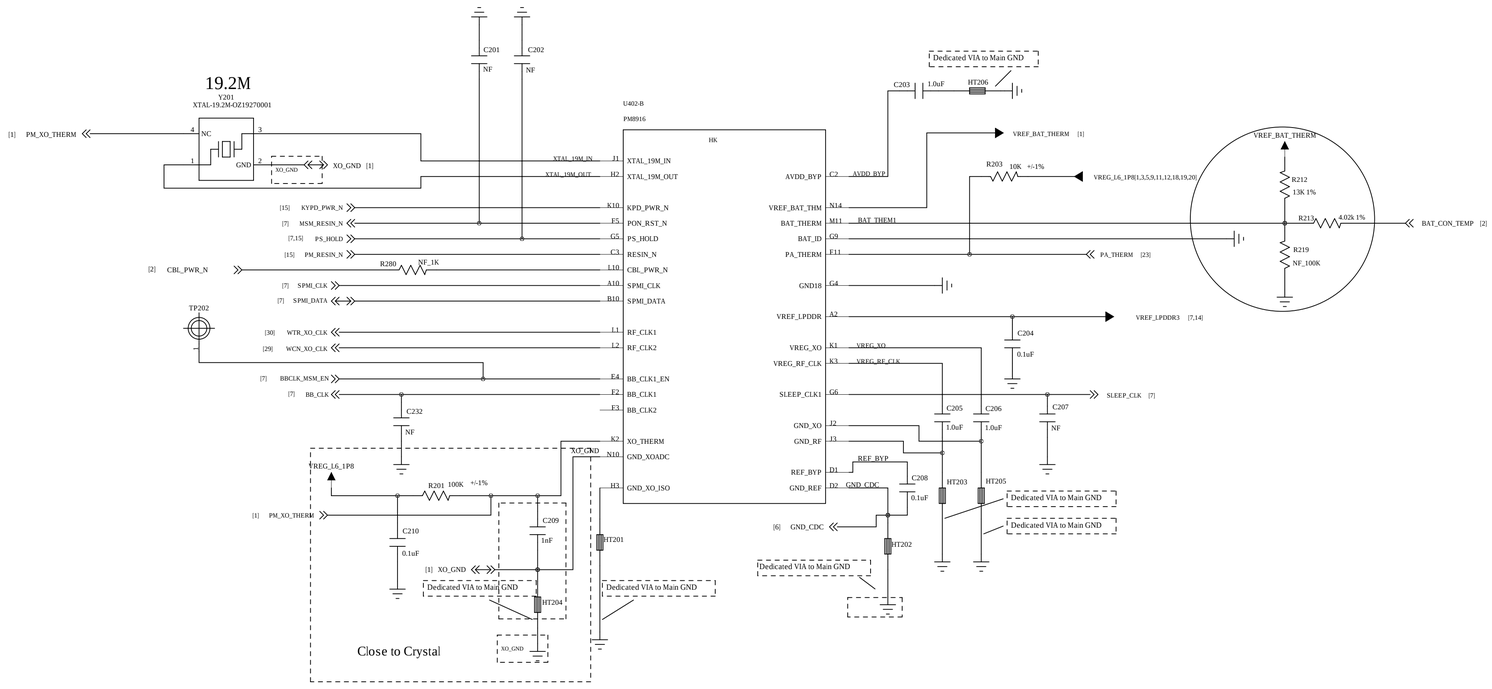

TITLE:	82918	REV:	M10
DOCUMENT NO.:	02_PM8916_CONTROL_AND_MPP/CLOCK	SIZED:	A1
DEPARTMENT:	Hardware DEPT.		
COMPANY:	WINGTECH		
DESIGNER: <DESIGNER>	Last Saved Date: 2015/9/21	SHEET:	1 OF 30

Pins	Hi Z	GND
OPT_1	No SMB1360	SMB1360 present
OPT_2	No Ext APC buck (S5)	Ext APC buck (S5) present

PM8916 support +15V input protected

Dedicated sense trace to battery connector

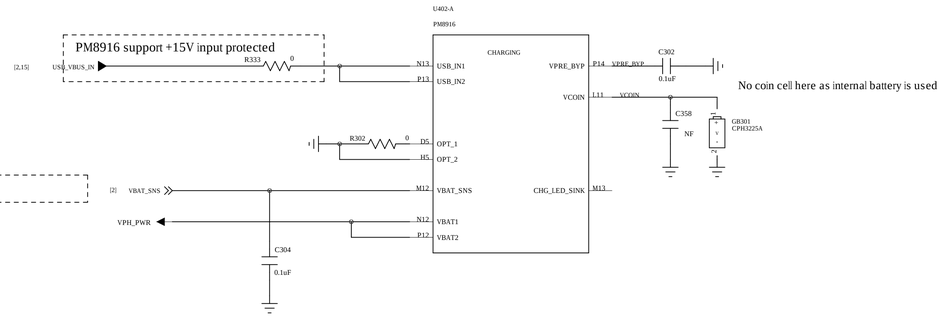

No coin cell here as internal battery is used

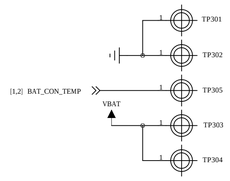

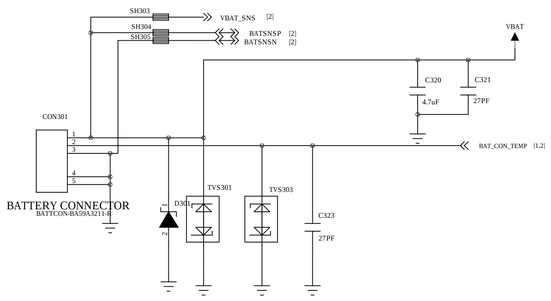

Already have 47K resistor in subboard

Close to connector
if using PMIC's linear charger
C0301 should assemble 4.7uF/16V capacitor
R0307 should assebble 0 ohm
R0302 should NC
R0312 should be 0ohm
BAT THERM switch to PM8916

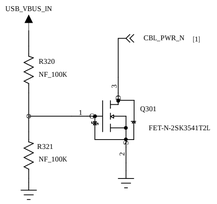

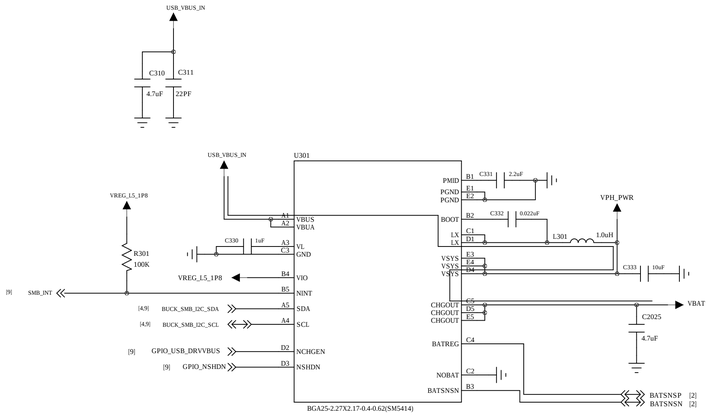

TITLE:	82918	REV:	M10
DOCUMENT NO.:	03_PM8916_CHARGING	SIZED:	A1
DEPARTMENT:	Hardware DEPT.		
COMPANY:	WINGTECH		
DESIGNER: <DESIGNER>	Last Saved Date: 2015/9/21	SHEET:	2 OF 30

Only odd MPPs (MPP_01, MPP_03) can be configured as analog outputs.
Only even MPPs(MPP_02, MPP_04) have current sink capability.

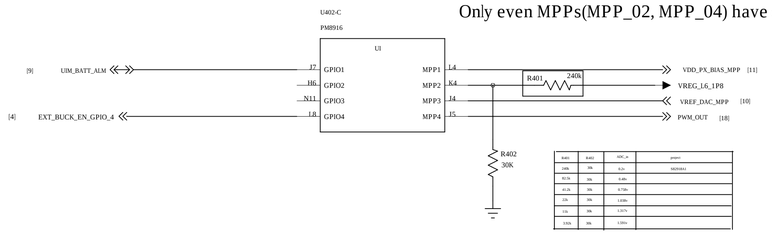

R401	R402	ADC_in	gripper
240k	39k	0.2v	HIGHMAX
91.5k	39k	0.48v	
45.3k	39k	0.74lv	
22k	39k	1.03lv	
11k	39k	1.317v	
3.92k	39k	1.59lv	

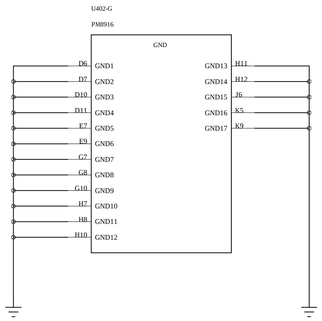

TITLE:	82918	REV:	M10
DOCUMENT NO.:	04_PM8916_GPIO/MPP	SIZED:	A1
DEPARTMENT:	Hardware DEPT.		
COMPANY:	WINGTECH		
DESIGNER: <DESIGNER>	Last Saved Date: 2015/9/21	SHEET:	3 OF 30

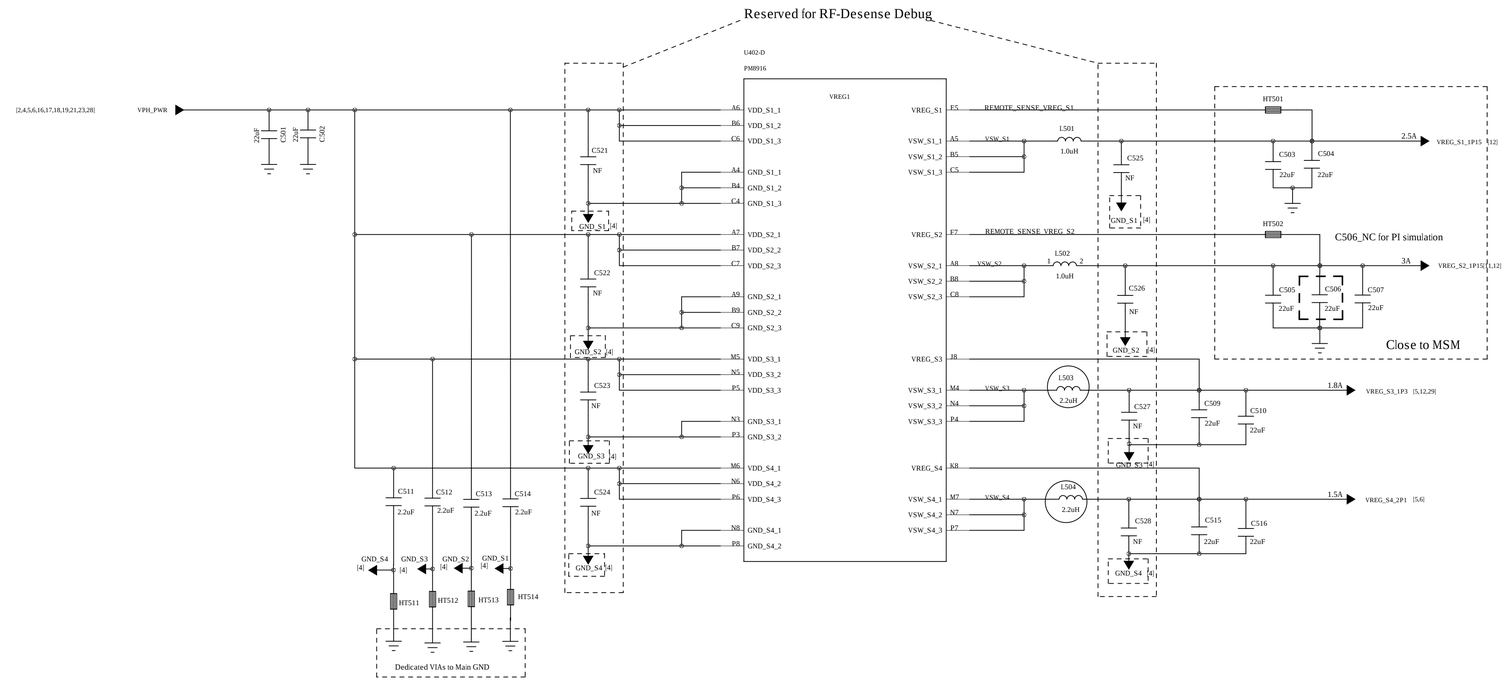

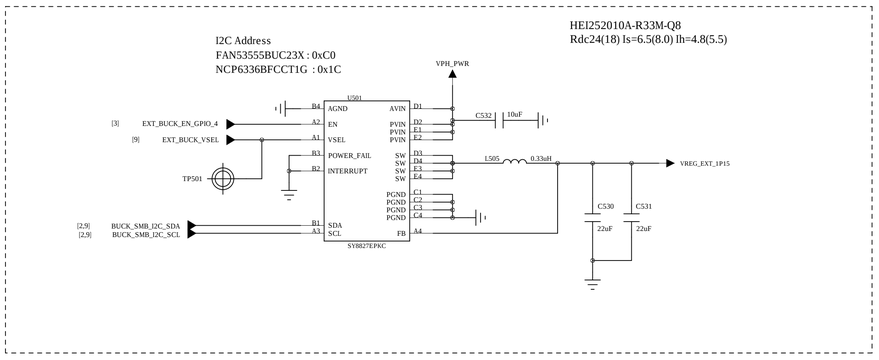

TITLE:	82918	REV:	M10
DOCUMENT NO.:	05_PM8916_BUCK_CONVERTER	SIZED:	A1
DEPARTMENT:	Hardware DEPT.		
COMPANY:	WINGTECH		
DESIGNER: <DESIGNER>	Last Saved Date: 2015/9/21	SHEET:	4 OF 30

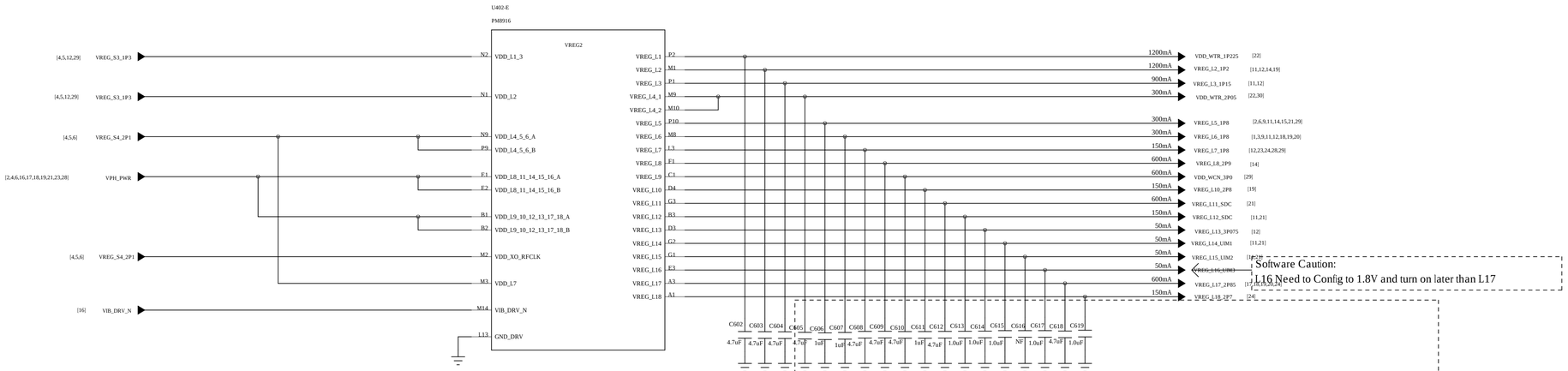

Software Caution:
L16 Need to Config to 1.8V and turn on later than L17

PSEUDO CAPLESS LDOs
L4, L5, L6, L7, L8, L9, L10, L11, L12, L13, L14, L15, L16, L17, L18

Local output capacitor can NC/Remove depends on remote load capacitors and PCB layout
LDOs L8, L9, L11, L17 each shall have total effective output capacitance of 4.7uF.
Please refer to PM8916 training slides(80-NK808-21) for limits on LDO output trace resistance and inductance
Rest of the LDOs shall each have total effective output capacitance of 1.0uF.

The Pseudo capless LDOs must comply to following tolerable routing requirement:
P50: R<400mOhms, L<45nH
P150: R<200mOhms, L<20nH
P300: R<150mOhms, L<18nH
P600: R<150mOhms, L<18nH

Please ensure when you DNI the output capacitor of Pseudo capless LDOs
the effective total capacitance at load side shall match above requirement

NC first

TITLE:	82918	REV:	M10
DOCUMENT NO.:	06_PM8916_LDO_CIRCUITS	SIZED:	A1
DEPARTMENT:	Hardware DEPT.		
COMPANY:	WINGTECH		
DESIGNER: <DESIGNER>	Last Saved Date: 2015/9/21	SHEET:	5 OF 30

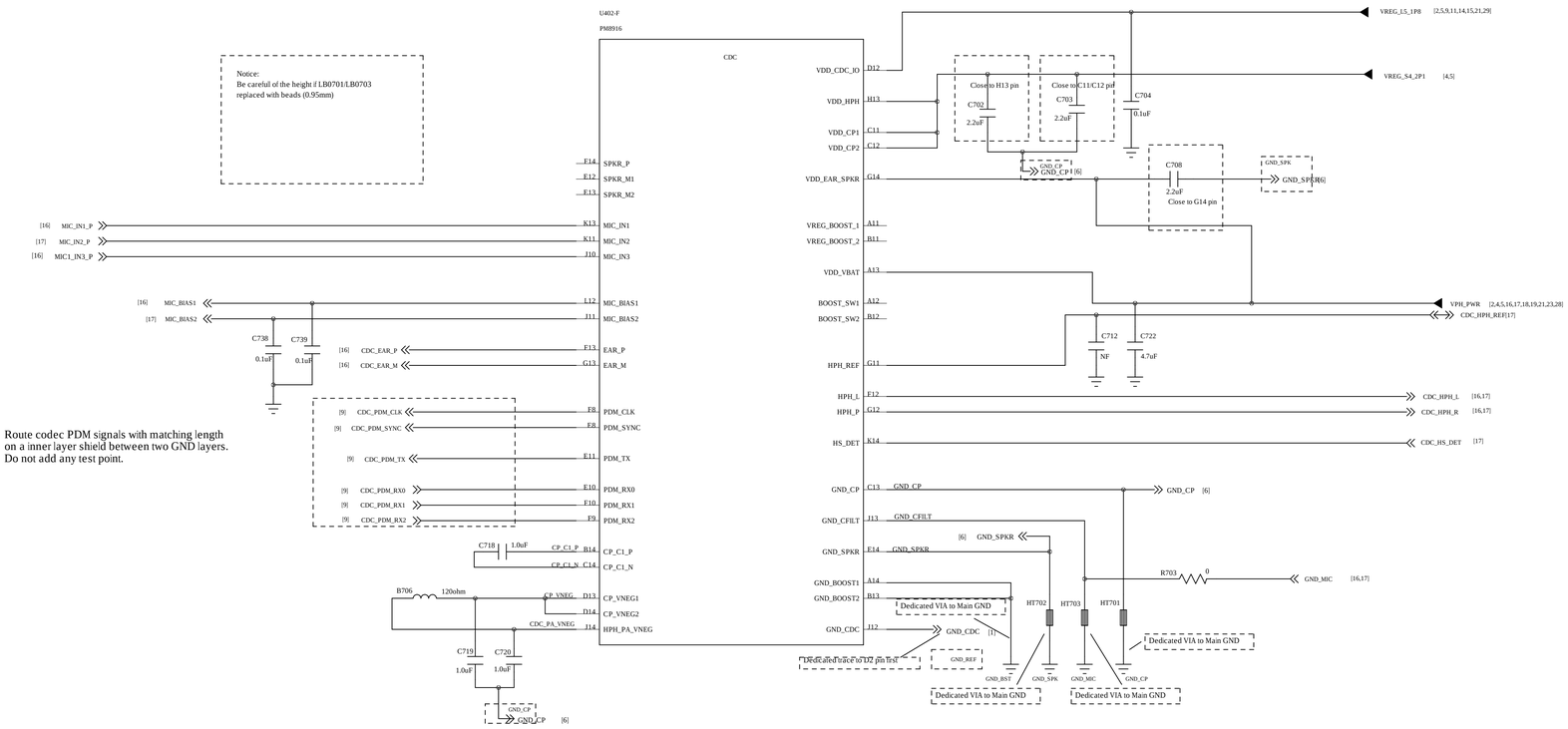

Route codec PDM signals with matching length on a inner layer shield between two GND layers. Do not add any test point.

TITLE:	82918	REV:	M10
DOCUMENT NO.:	、07_PM8916_CODEC	SIZED:	A1
DEPARTMENT:	Hardware DEPT.		
COMPANY:	WINGTECH		
DESIGNER: <DESIGNER>	Last Saved Date: 2015/9/21	SHEET: 6 OF 30	

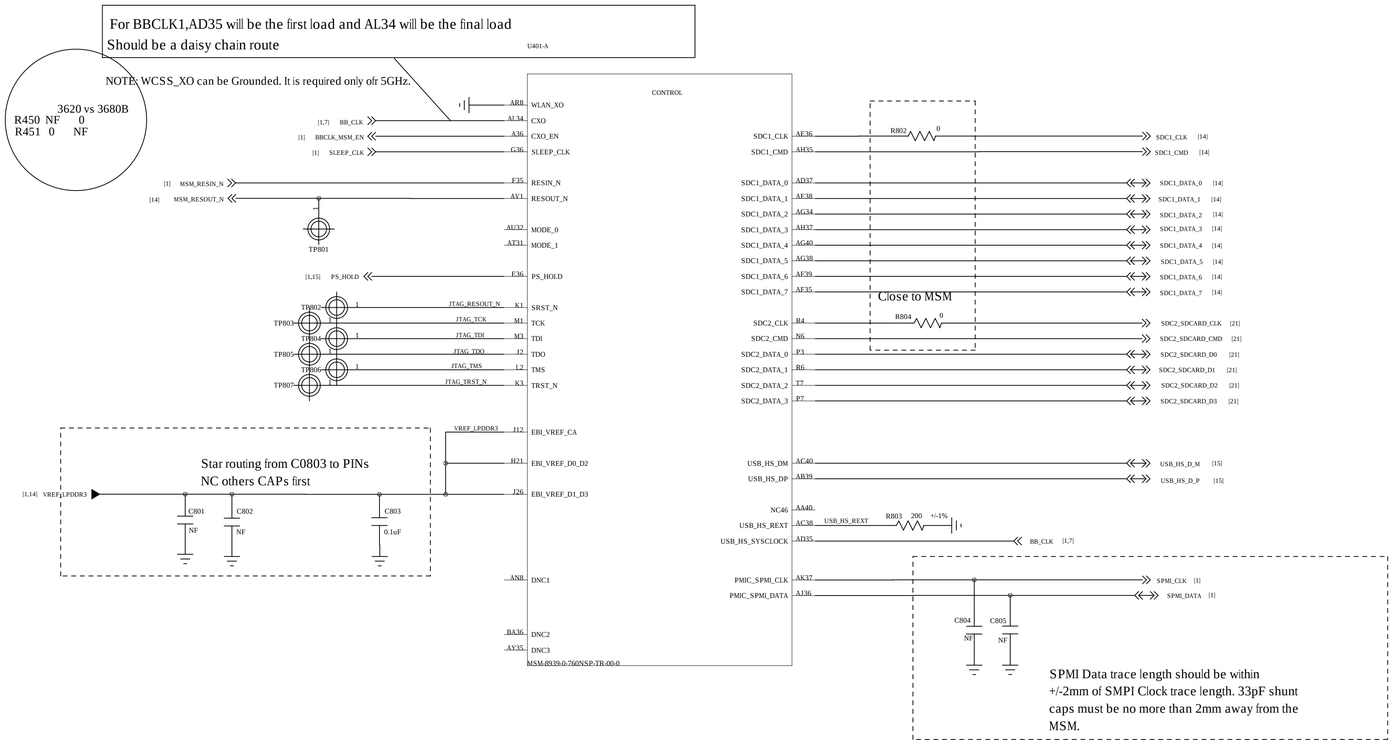

TITLE:	82918	REV:	M10
DOCUMENT NO.:	08_MSM8939_CONTROL	SIZED:	A1
DEPARTMENT:	Hardware DEPT.		
COMPANY:	WINGTECH		
DESIGNER: <DESIGNER>	Last Saved Date: 2015/9/21	SHEET: 7 OF 30	

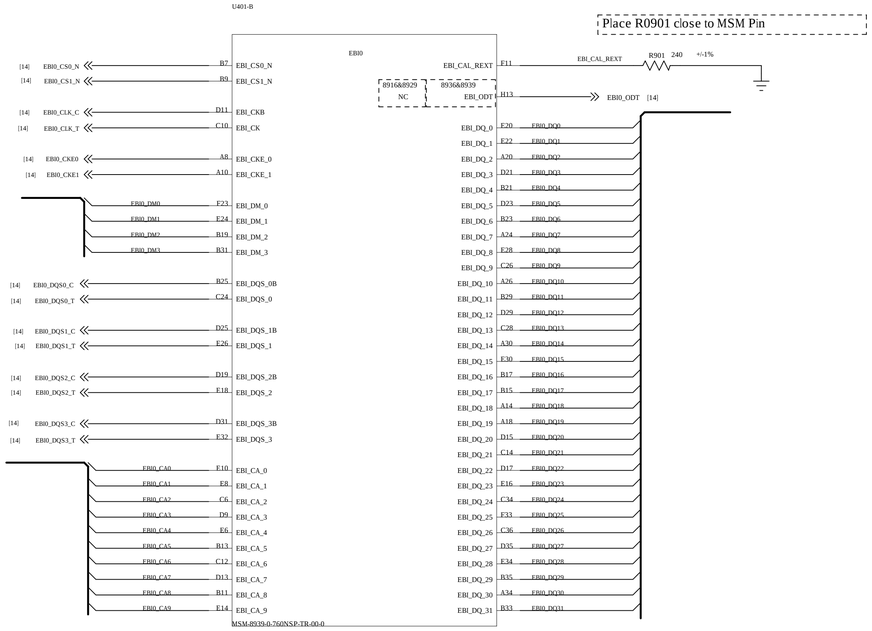

TITLE:	82918	REV:	M10
DOCUMENT NO.:	09_MSM8939_EBI	SIZED:	A1
DEPARTMENT:	Hardware DEPT.		
COMPANY:	WINGTECH		
DESIGNER: <DESIGNER>	Last Saved Date: 2015/9/21	SHEET: 8 OF 30	

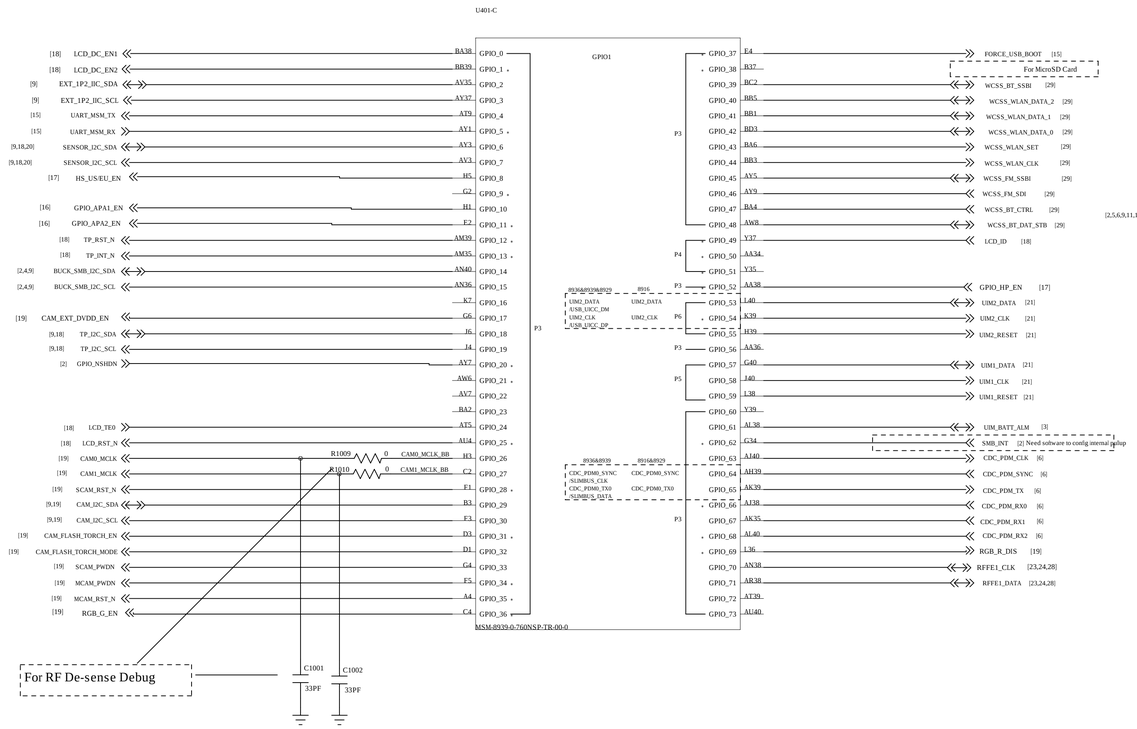

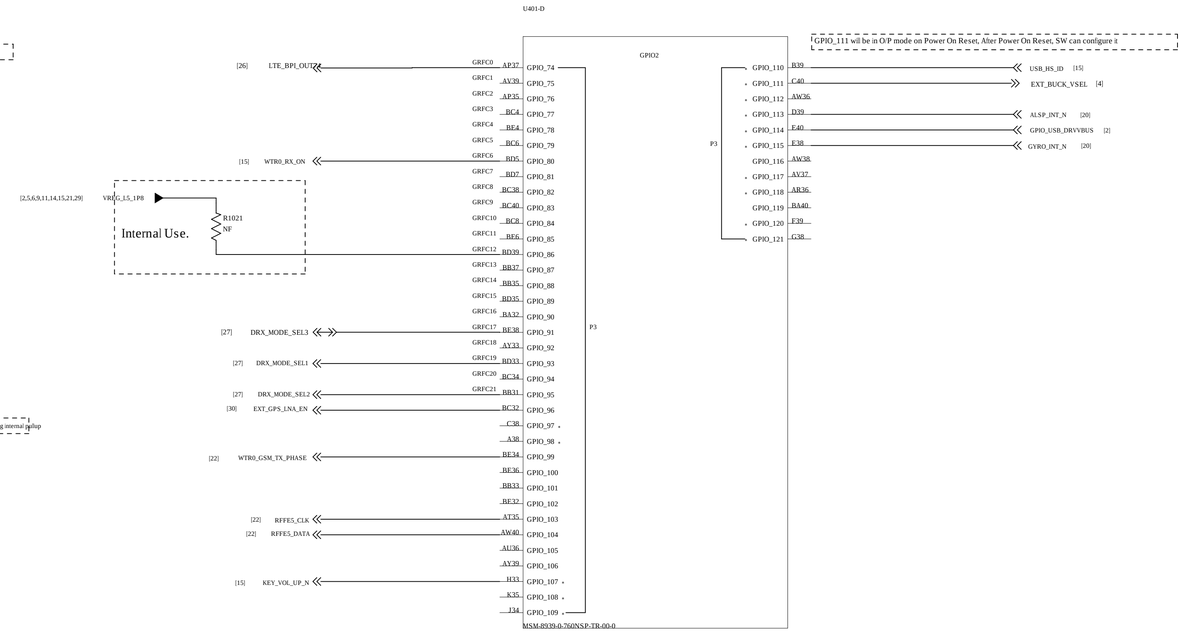

8939/36 Support USB-UICC.

MSM8916 vs MSM8939 Stuff Option for UIM & USB UICC Interface

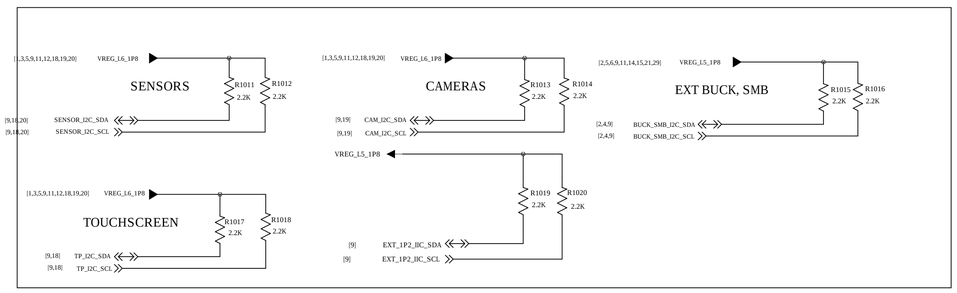

TITLE:	82918	REV:	M10
DOCUMENT NO.:	10_MSM8939_GPIO	SIZED:	A1
DEPARTMENT:	Hardware DEPT.		
COMPANY:	WINGTECH		
DESIGNER: <DESIGNER>	Last Saved Date: 2015/9/21	SHEET: 9 OF 30	

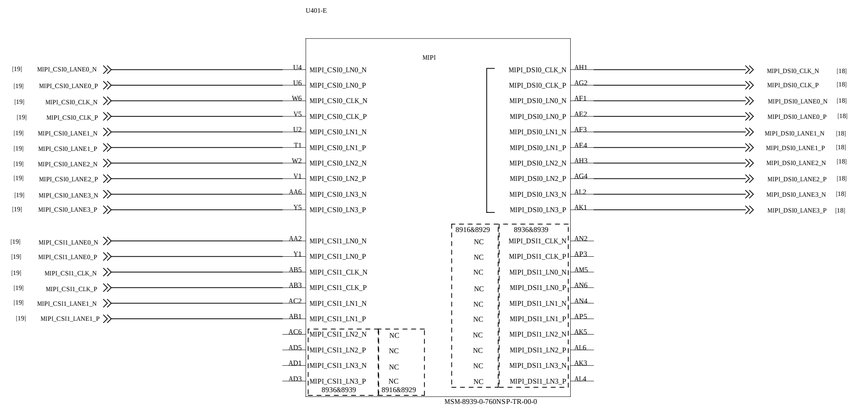

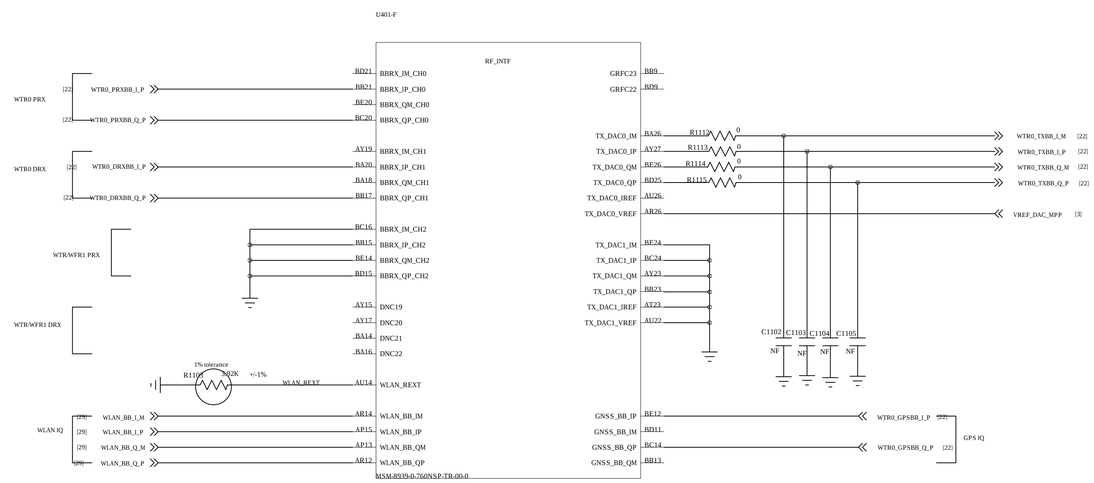

TITLE:	82918	REV:	M10
DOCUMENT NO:	11_MSM8939_MIPI_AND_RF_CONTROL	SIZED:	A1
DEPARTMENT:	Hardware DEPT.		
COMPANY:	WINGTECH		
DESIGNER: <DESIGNER>	Last Saved Date: 2015/9/21	SHEET: 10 OF 30	

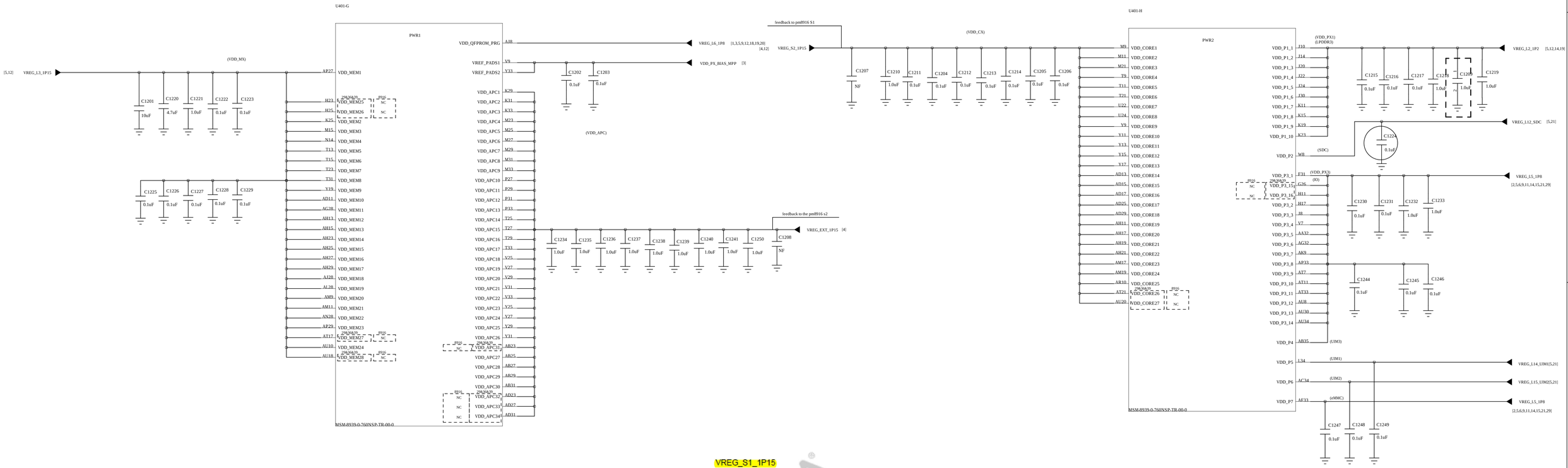

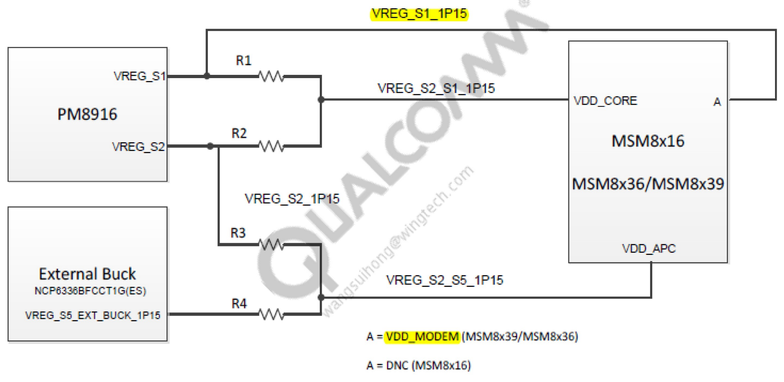

SoC	Jumper on	Jumper off
MSM8x16	R1, R3	R2, R4
MSM8x36/MSM8x39	R2, R4	R1, R3

TITLE:	82918	REV:	M10
DOCUMENT NO.:	12_MSM8939_POWER1	SIZED:	A1
DEPARTMENT:	Hardware DEPT.		
COMPANY:	WINGTECH		
DESIGNER: <DESIGNER>	Last Saved Date: 2015/9/21	SHEET:	11 OF 30

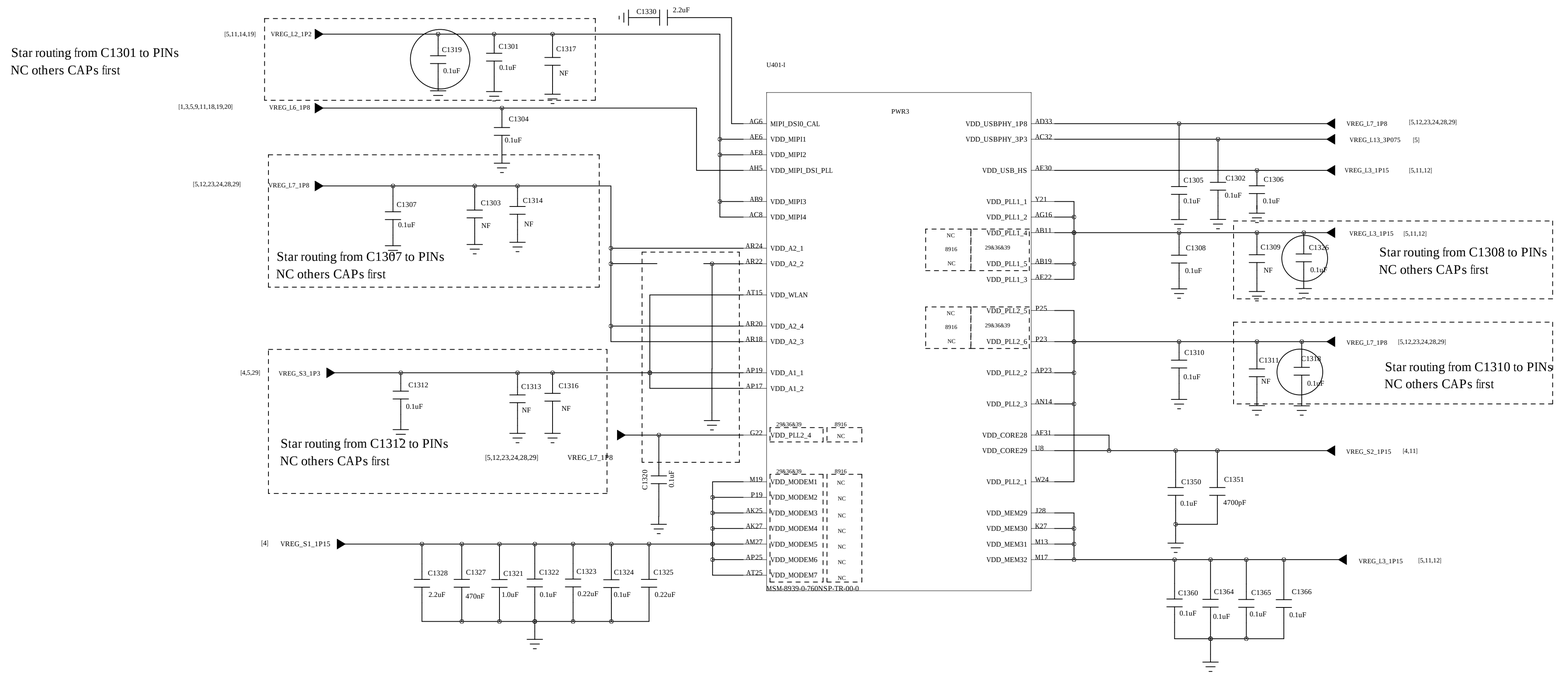

TITLE:	82918	REV:	M10
DOCUMENT NO.:	13_MSM8939_POWER2	SIZED:	A1
DEPARTMENT:	Hardware DEPT.		
COMPANY:	WINGTECH		
DESIGNER: <DESIGNER>	Last Saved Date: 2015/9/21	SHEET: 12 OF 30	

U401-K

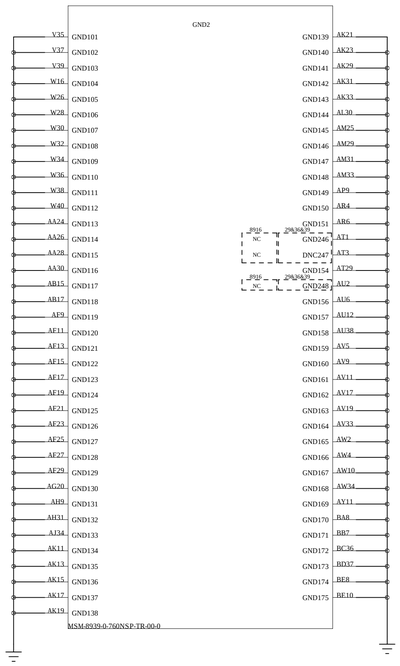

U401-J

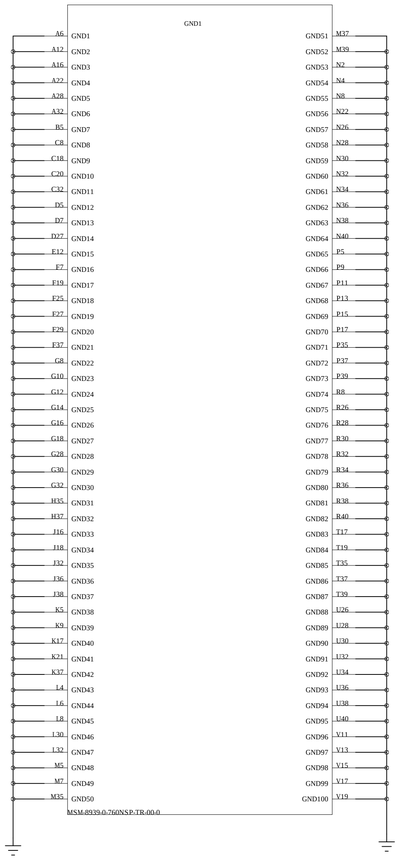

U401-L

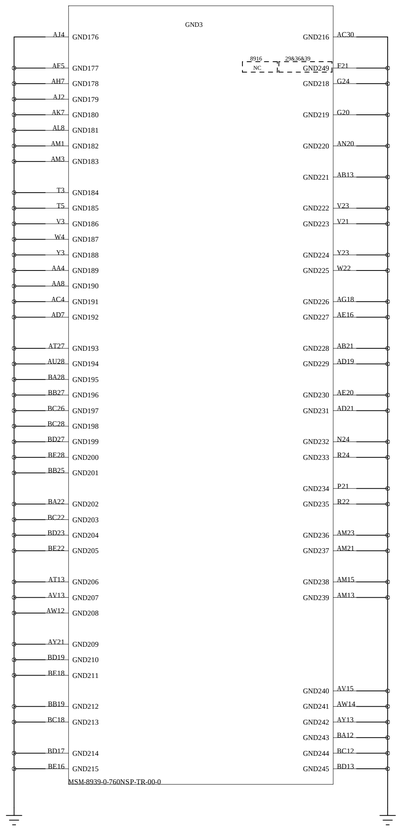

U401-M

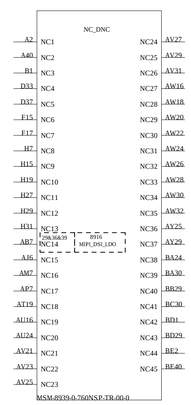

TITLE:	82918	REV:	M10
DOCUMENT NO.:	、14_MSM8939_GND	SIZED:	A1
DEPARTMENT:	Hardware DEPT.		
COMPANY:	WINGTECH		
DESIGNER: <DESIGNER>	Last Saved Date: 2015/9/21	SHEET:	13 OF 30

	MICRO/HYNIX	SAMSUNG
U1501.G3	ZQ1	NC
U1501.A7	RFU	RCLK

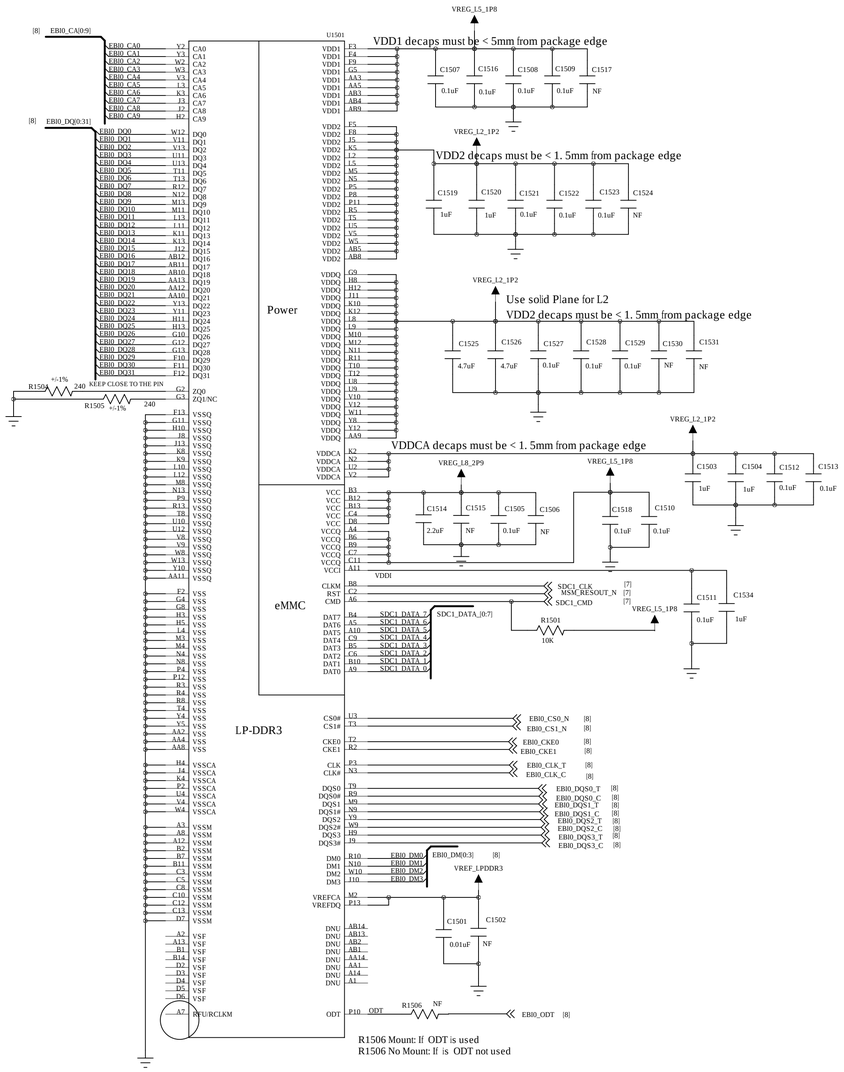

Note: Pull-up resistors on SDC1_DATA are PCB and eMMC vender dependent

TITLE:	82918	REV:	M10
DOCUMENT NO.:	15_MEMORY_LPDDR3+EMMC	SIZED:	A1
DEPARTMENT:	Hardware DEPT.		
COMPANY:	WINGTECH		
DESIGNER: <DESIGNER>	Last Saved Date: 2015/9/21	SHEET: 14 OF 30	

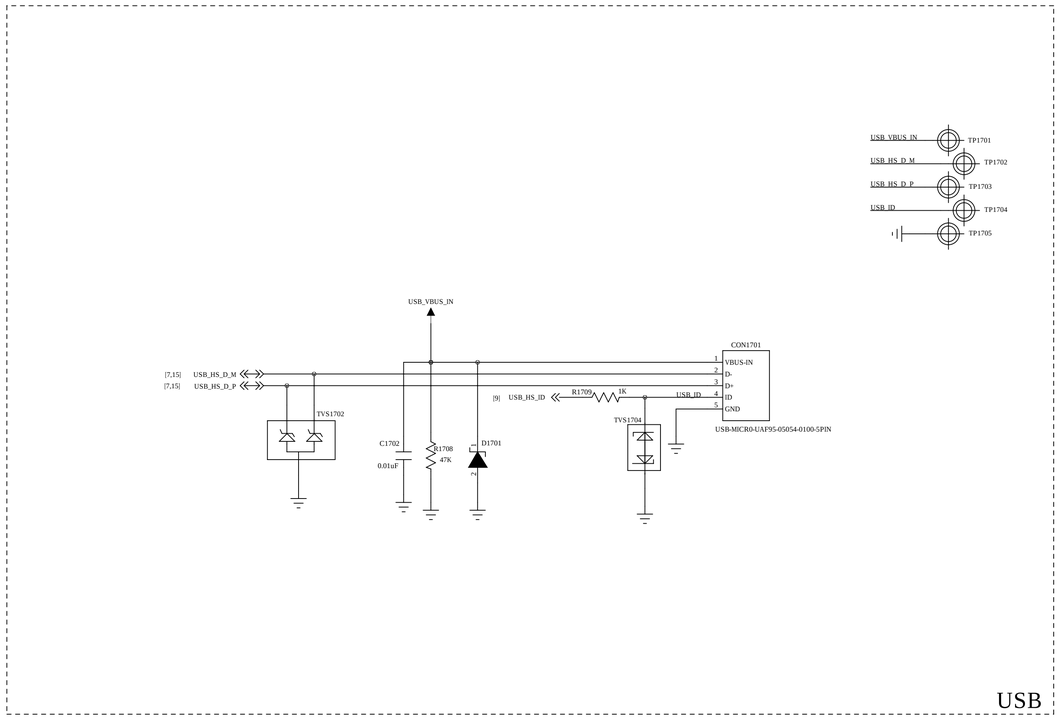

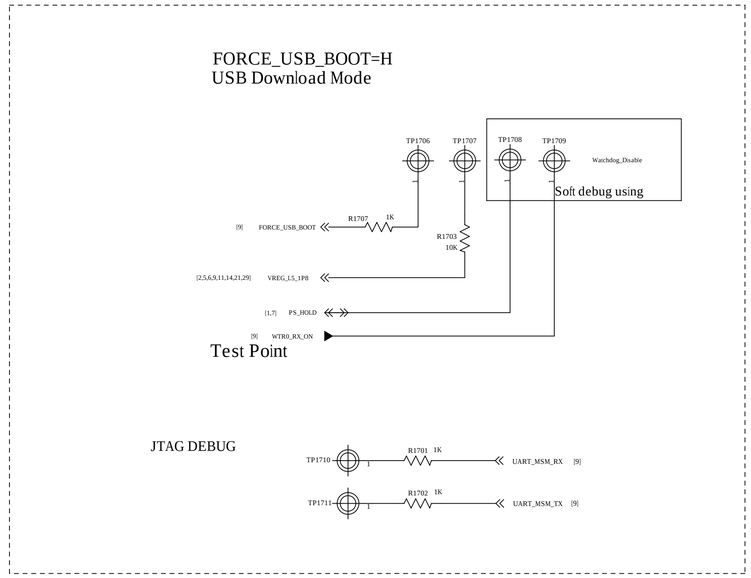

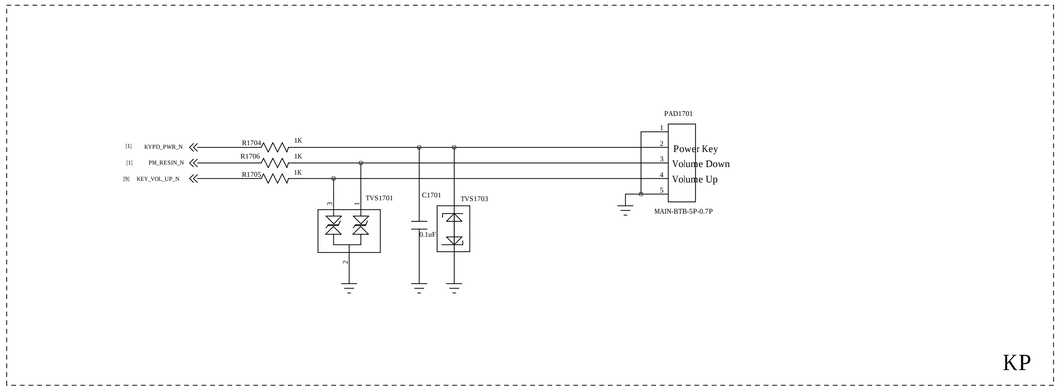

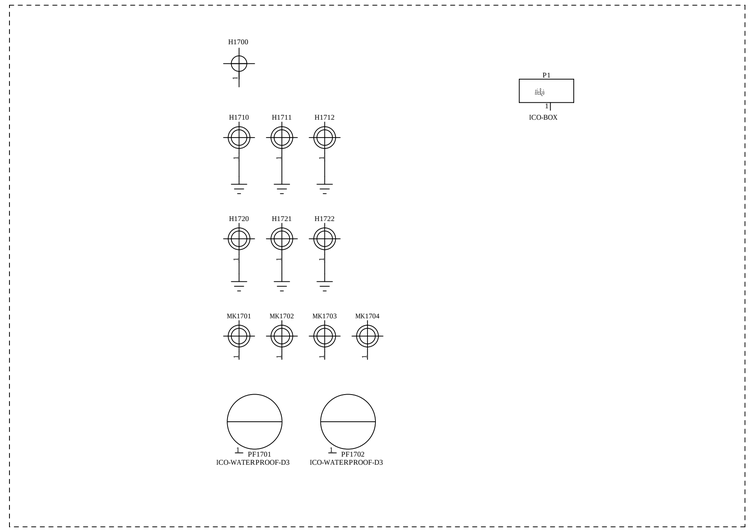

TITLE:	82918	REV:	M10
DOCUMENT NO.:	、17_USB_KP_HOLE	SIZED:	A1
DEPARTMENT:	Hardware DEPT.		
COMPANY:	WINGTECH		
DESIGNER: <DESIGNER>	Last Saved Date: 2015/9/21	SHEET: 15 OF 30	

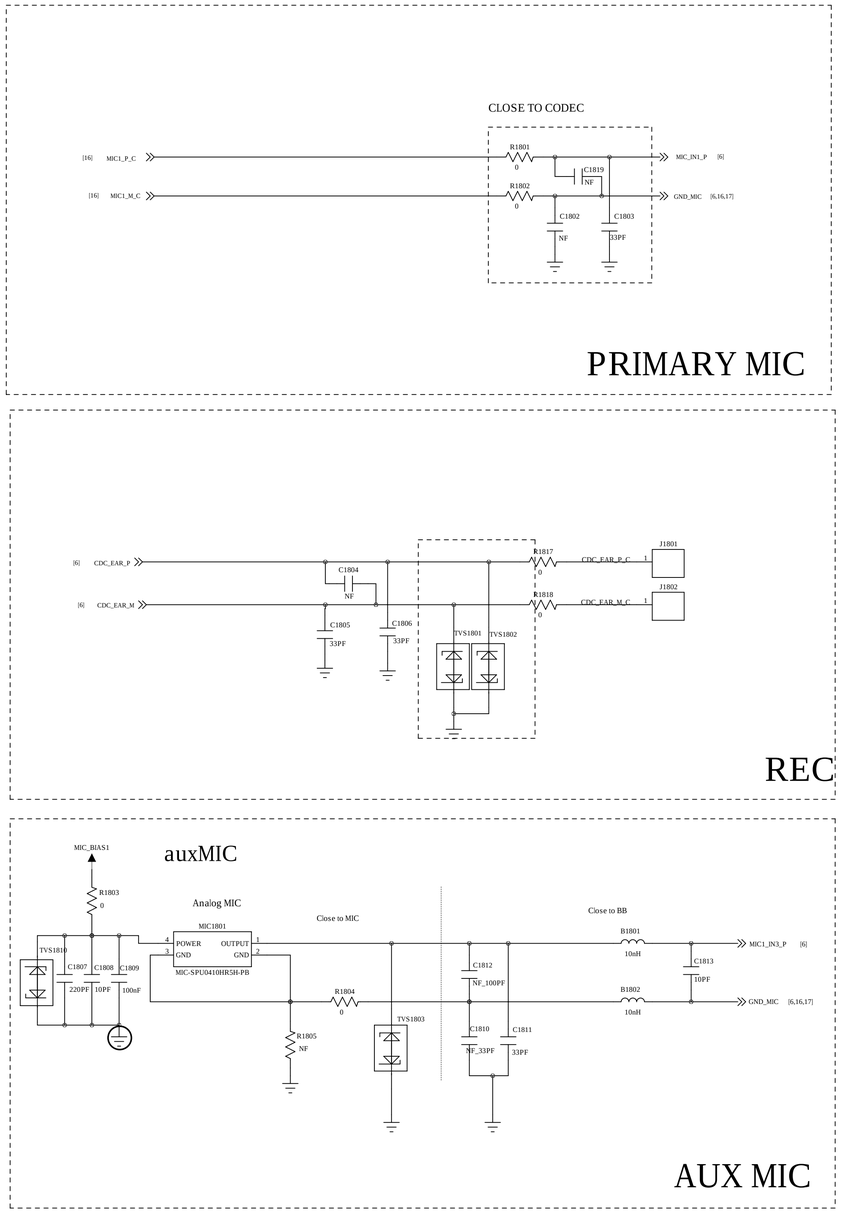

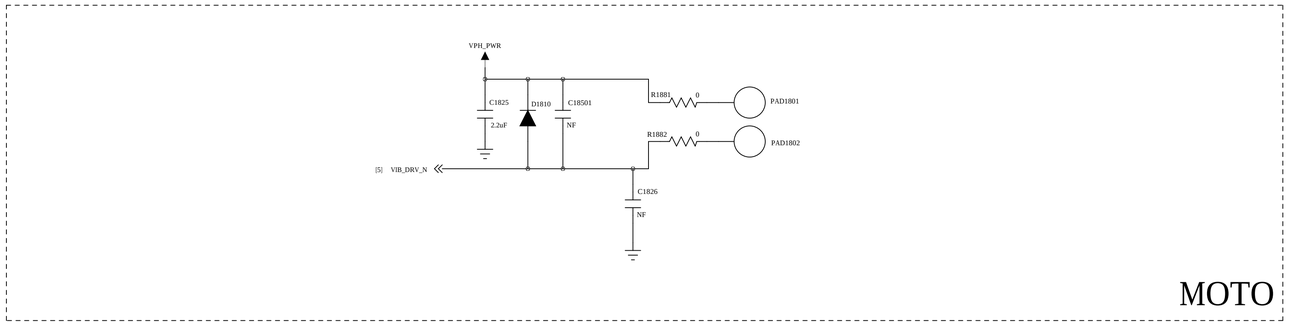

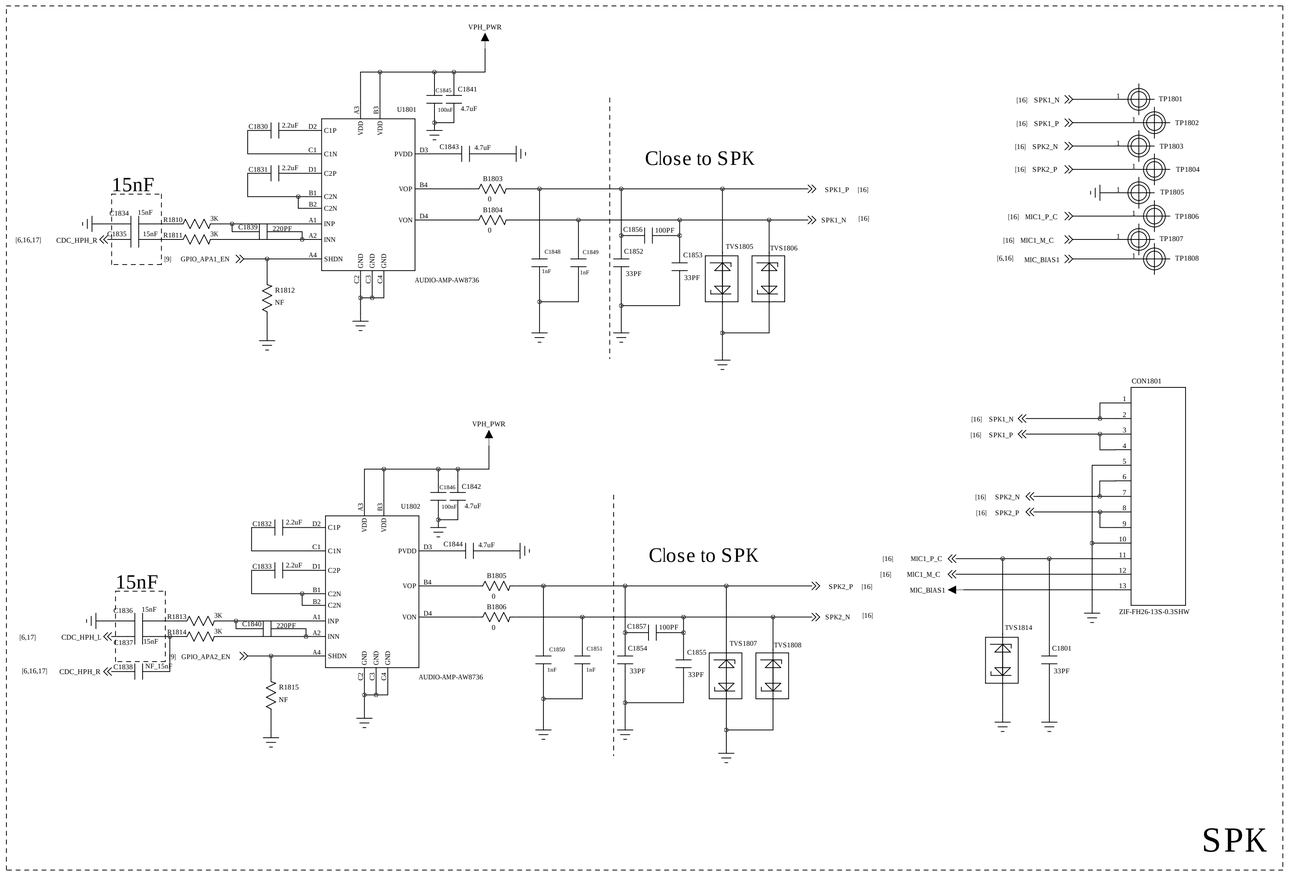

TITLE:	82918	REV:	M10
DOCUMENT NO.:	18_MIC_SPK_REC_MOT	SIZED:	A1
DEPARTMENT:	Hardware DEPT.		
COMPANY:	WINGTECH		
DESIGNER: <DESIGNER>	Last Saved Date: 2015/9/21	SHEET:	16 OF 30

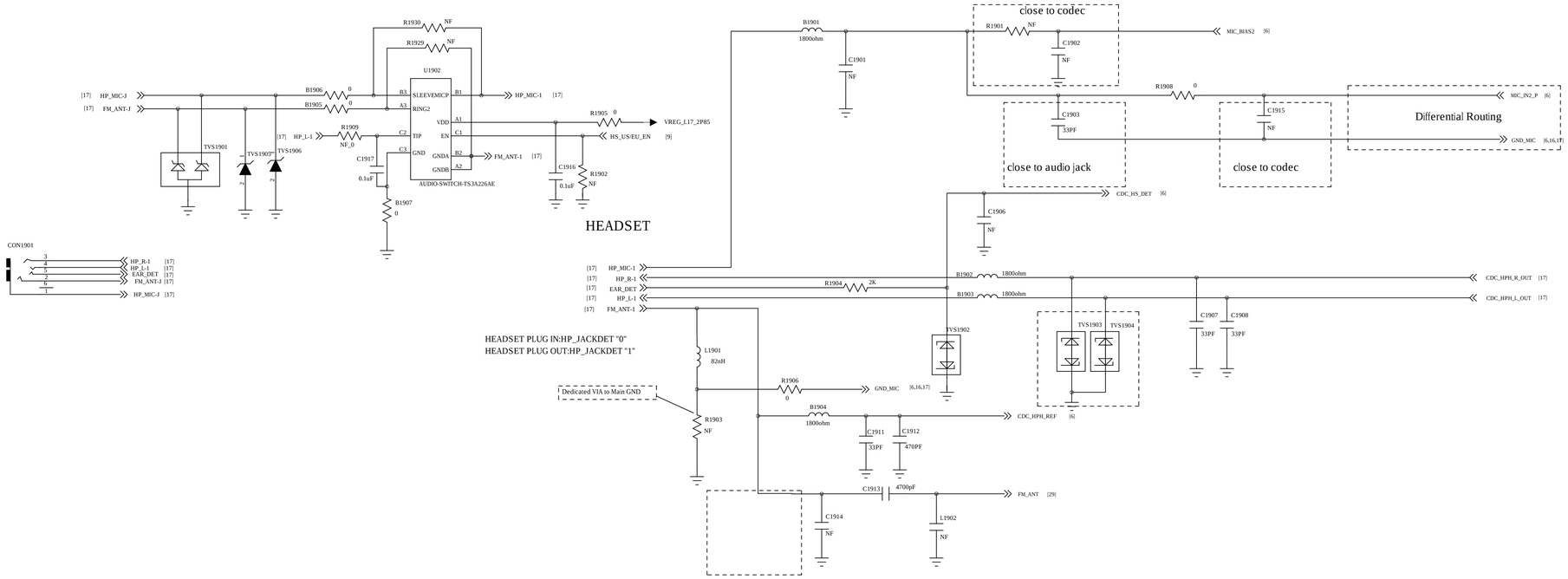

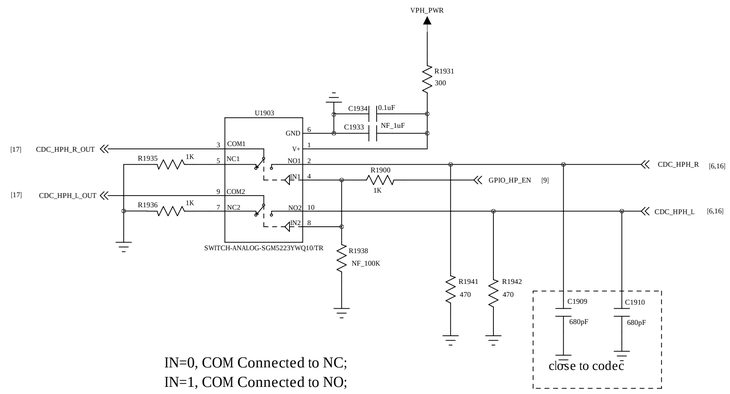

TITLE:	82918	REV:	M10
DOCUMENT NO.:	19_EARPHONE	SIZED:	A1
DEPARTMENT:	Hardware DEPT.		
COMPANY:	WINGTECH		
DESIGNER: <DESIGNER>	Last Saved Date: 2015/9/21	SHEET: 17 OF 30	

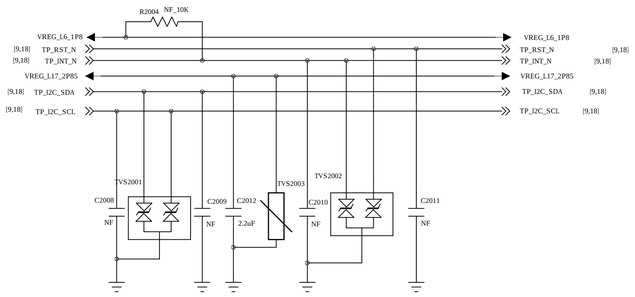

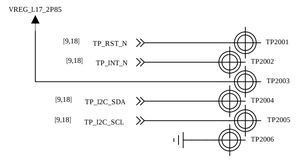

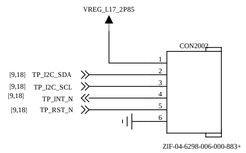

Power on sequence: Single Supply

FocalTech: FT5336		
I2C Address		
Write	0x70	It can be changed by FACTORY.
Read	0x71	

CTP

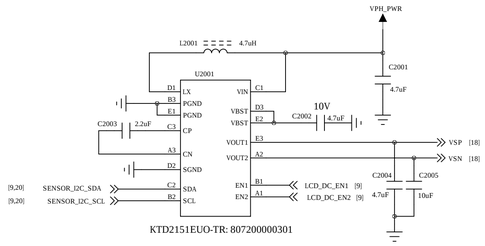

KTD2151 powers ON with a default voltage of 5.4V

SBL software should configure this to 5.0 V

LCD_BOOST_DRIVER

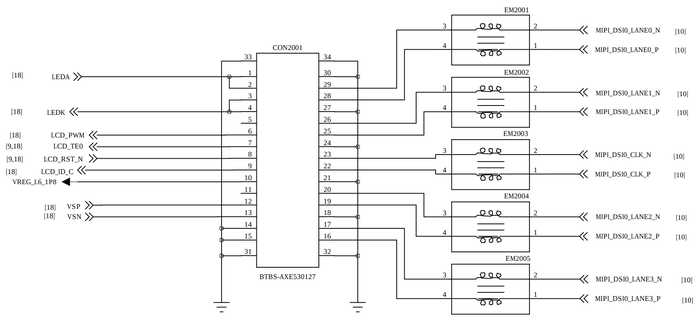

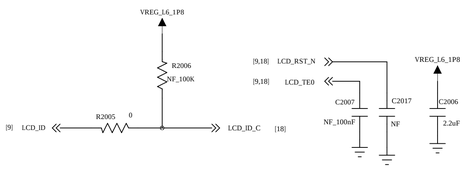

LCD

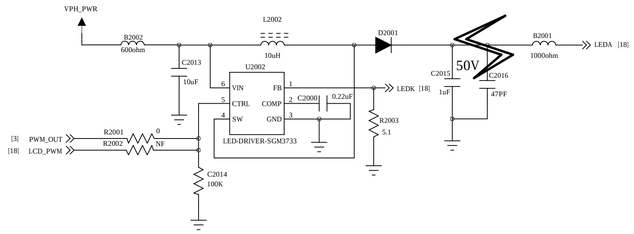

BL LED DRIVER

TITLE:	82918	REV:	M10
DOCUMENT NO.:	20_LCD_CTP	SIZED:	A1
DEPARTMENT:	Hardware DEPT.		
COMPANY:	WINGTECH		
DESIGNER: <DESIGNER>	Last Saved Date: 2015/9/21	SHEET: 18 OF 30	

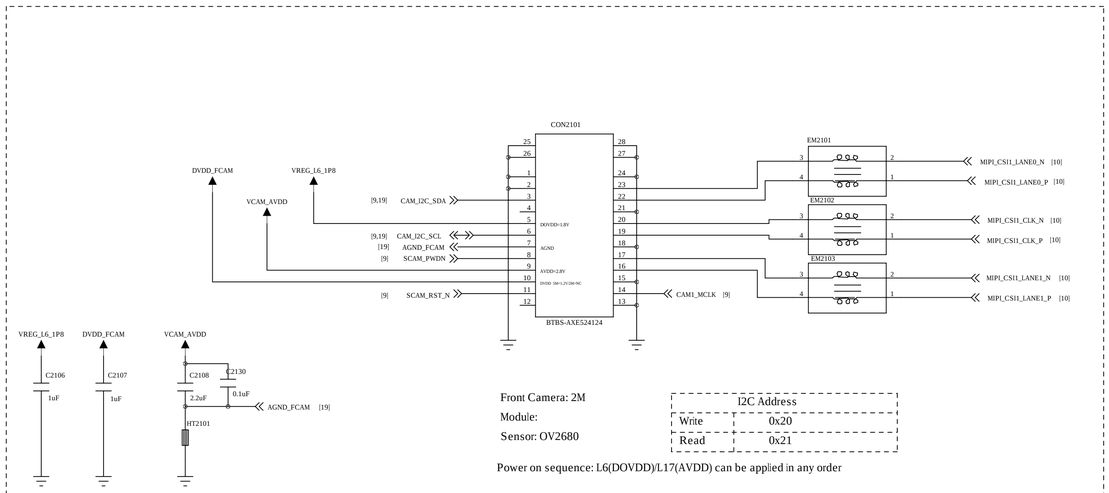

Front Camera: 2M
Module:
Sensor: OV2680

I2C Address	
Write	0x20
Read	0x21

Power on sequence: L6(DOVDD)/L17(AVDD) can be applied in any order

FRONT CAM

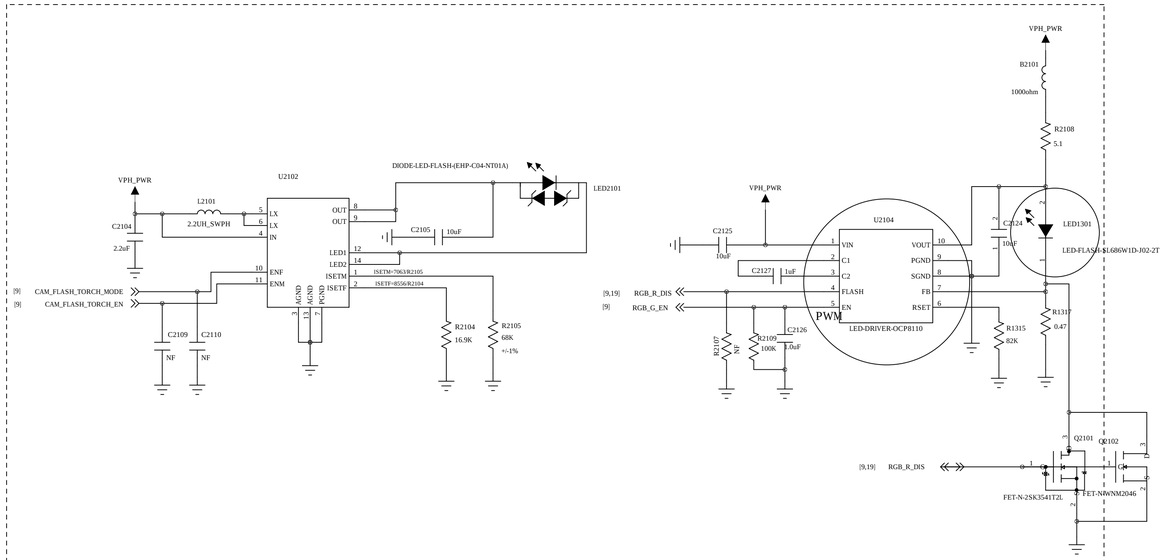

FLASH LED

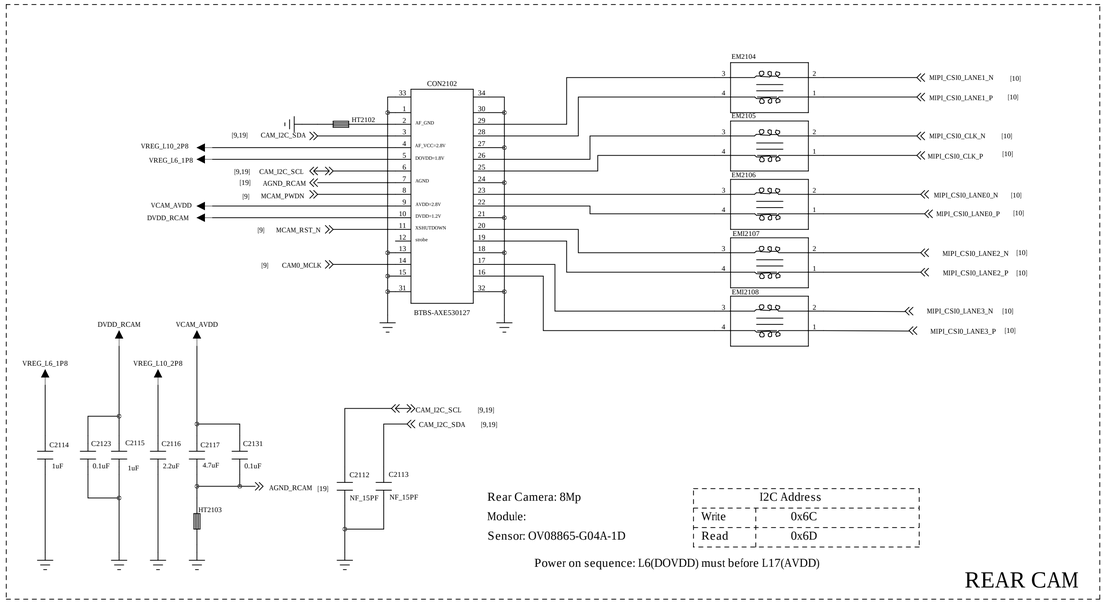

Rear Camera: 8Mp
Module:
Sensor: OV08865-G04A-1D

I2C Address	
Write	0x6C
Read	0x6D

Power on sequence: L6(DOVDD) must before L17(AVDD)

REAR CAM

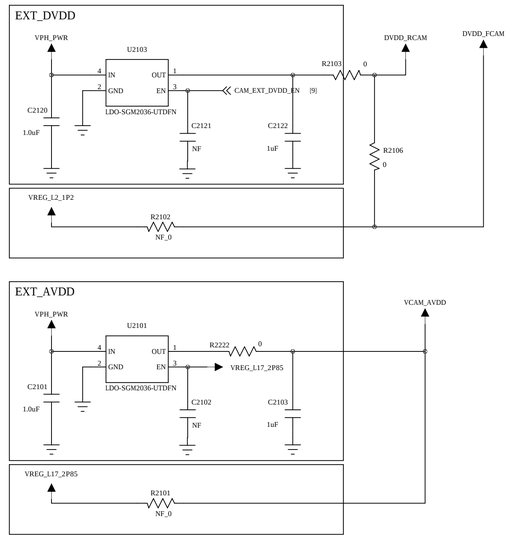

EXT_PWR

TITLE:	82918	REV:	M10
DOCUMENT NO.:	21_CAMERA	SIZED:	A1
DEPARTMENT:	Hardware DEPT.		
COMPANY:	WINGTECH		
DESIGNER: <DESIGNER>	Last Saved Date: 2015/9/21	SHEET: 19 OF 30	

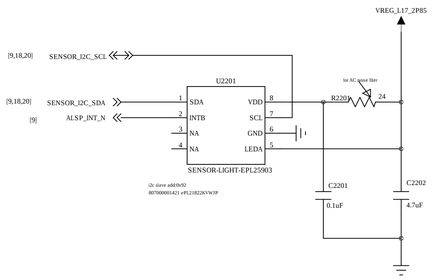

ALS+PS+IR

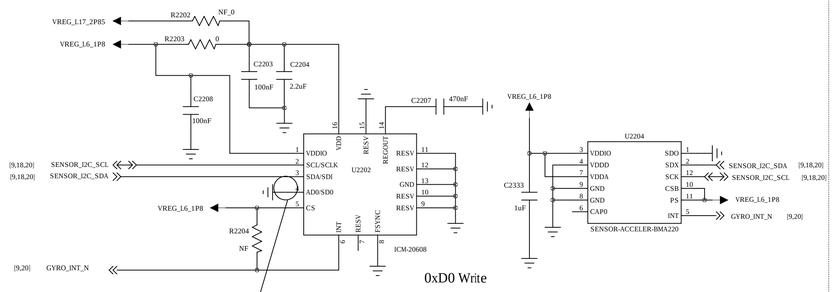

0xD0 Write

AD0=0 7b1101000 0x68

AD0=1 7b1101001 0x69

Gyroscope

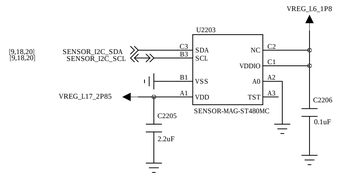

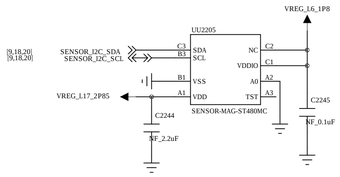

AKM: AK09911

I2C Address@CAD=0	
Write	0x18
Read	0x19

I2C Address@CAD=1	
Write	0x1A
Read	0x1B

Power on sequence: L6/L17 can be applied in any order

M-Sensor

RGB

TITLE:	82918	REV:	M10
DOCUMENT NO.:	22_SENSOR	SIZED:	A1
DEPARTMENT:	Hardware DEPT.		
COMPANY:	WINGTECH		
DESIGNER: <DESIGNER>	Last Saved Date: 2015/9/21	SHEET: 20 OF 30	

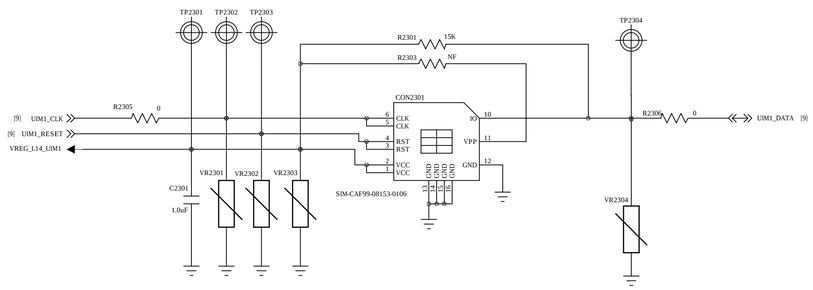

SIM1

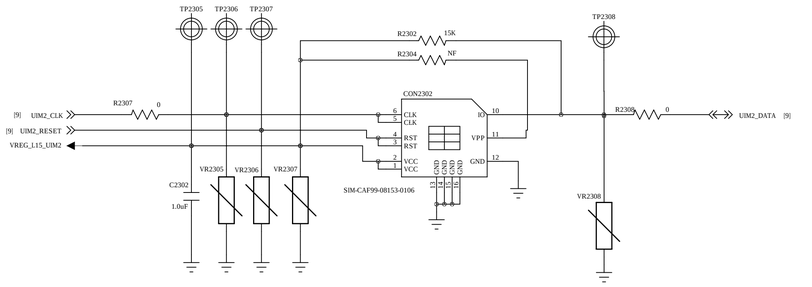

SIM2

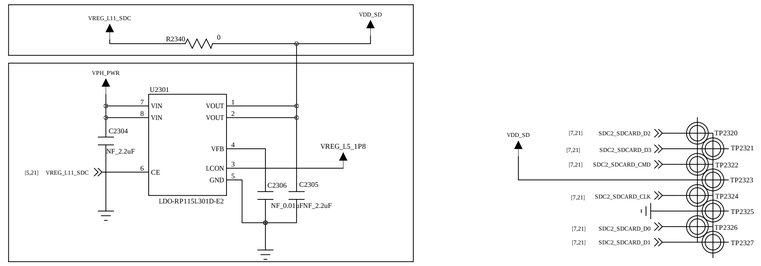

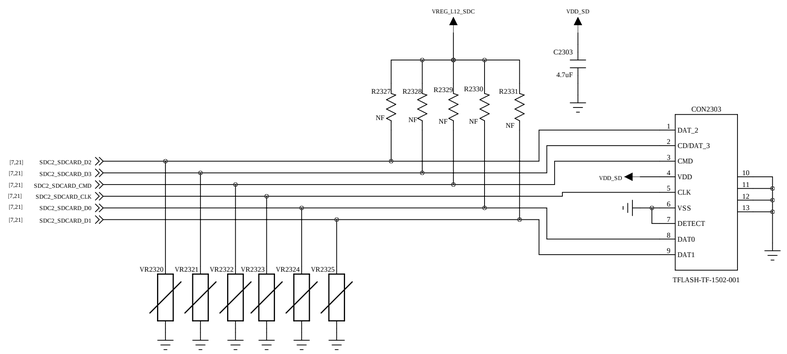

TF

TITLE:	82918	REV:	M10
DOCUMENT NO.:	23_SIM_TF	SIZED:	A1
DEPARTMENT:	Hardware DEPT.		
COMPANY:	WINGTECH		
DESIGNER: <DESIGNER>	Last Saved Date: 2015/9/21	SHEET: 21 OF 30	

WTR4905 CONTROL, PWR & GND

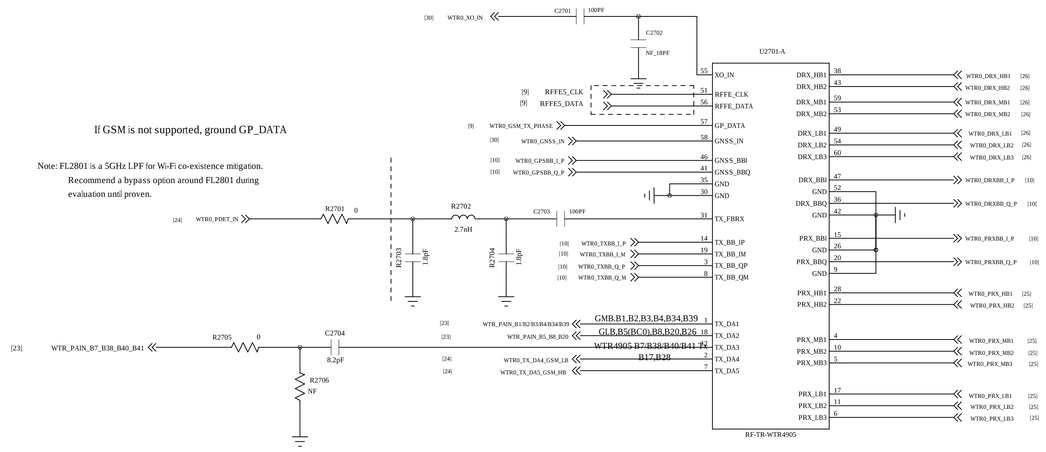

If GSM is not supported, ground GP_DATA

Note: FL2801 is a 5GHz LPF for Wi-Fi co-existence mitigation.
Recommend a bypass option around FL2801 during evaluation until proven.

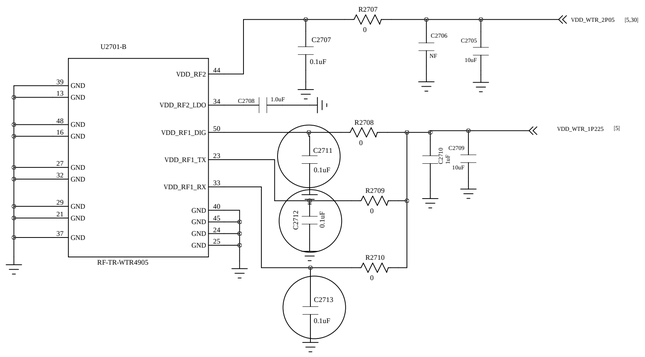

TITLE:	82918	REV:	M10
DOCUMENT NO.:	27_WTR4905	SIZED:	A1
DEPARTMENT:	Hardware DEPT.		
COMPANY:	WINGTECH		
DESIGNER: <DESIGNER>	Last Saved Date: 2015/9/21	SHEET: 22 OF 30	

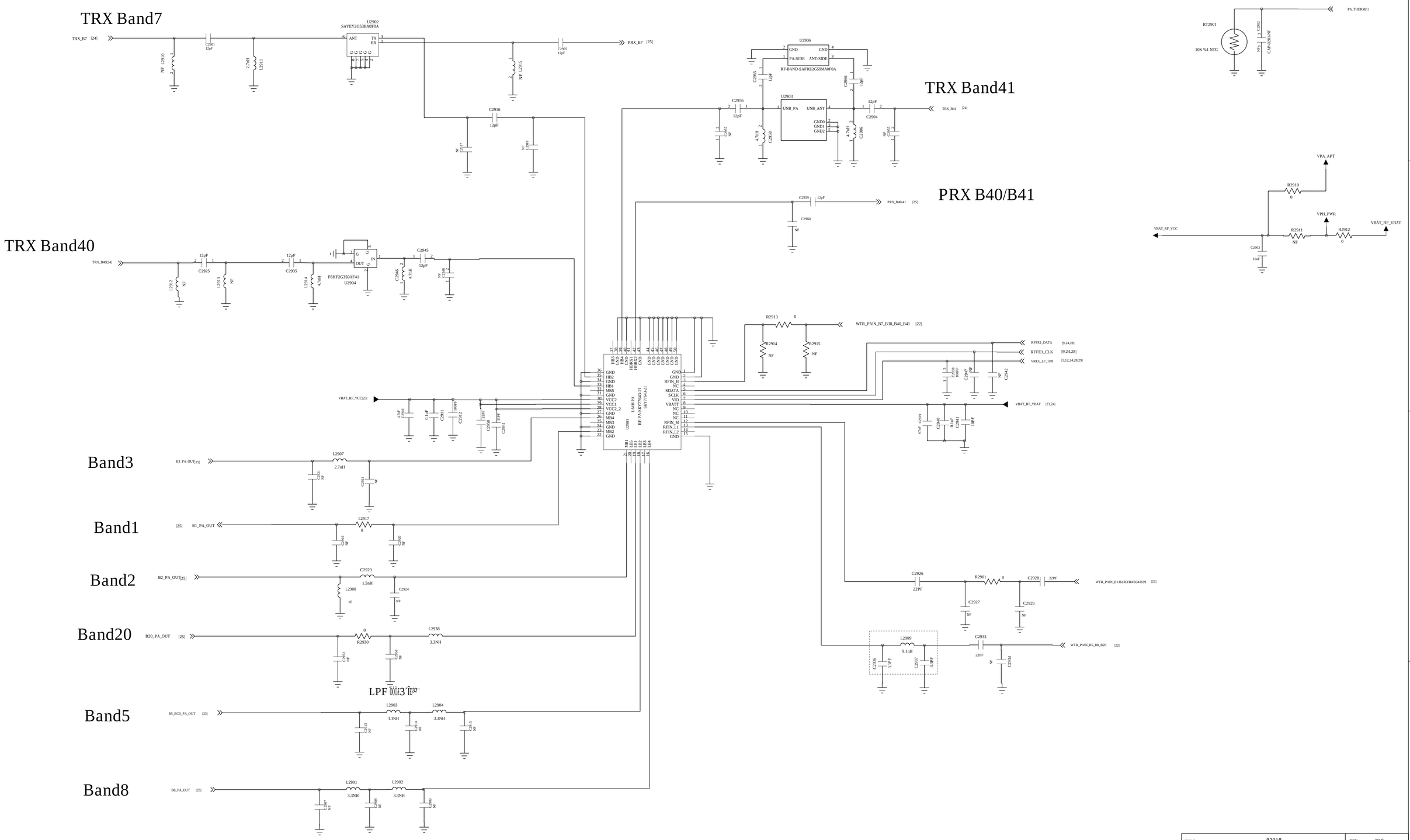

TITLE:	82918	REV:	M10
DOCUMENT NO.:	29_SKY77643	SIZED:	A1
DEPARTMENT:	Hardware DEPT.		
COMPANY:	WINGTECH		
DESIGNER: <DESIGNER>	Last Saved Date: 2015/9/21	SHEET: 23 OF 30	

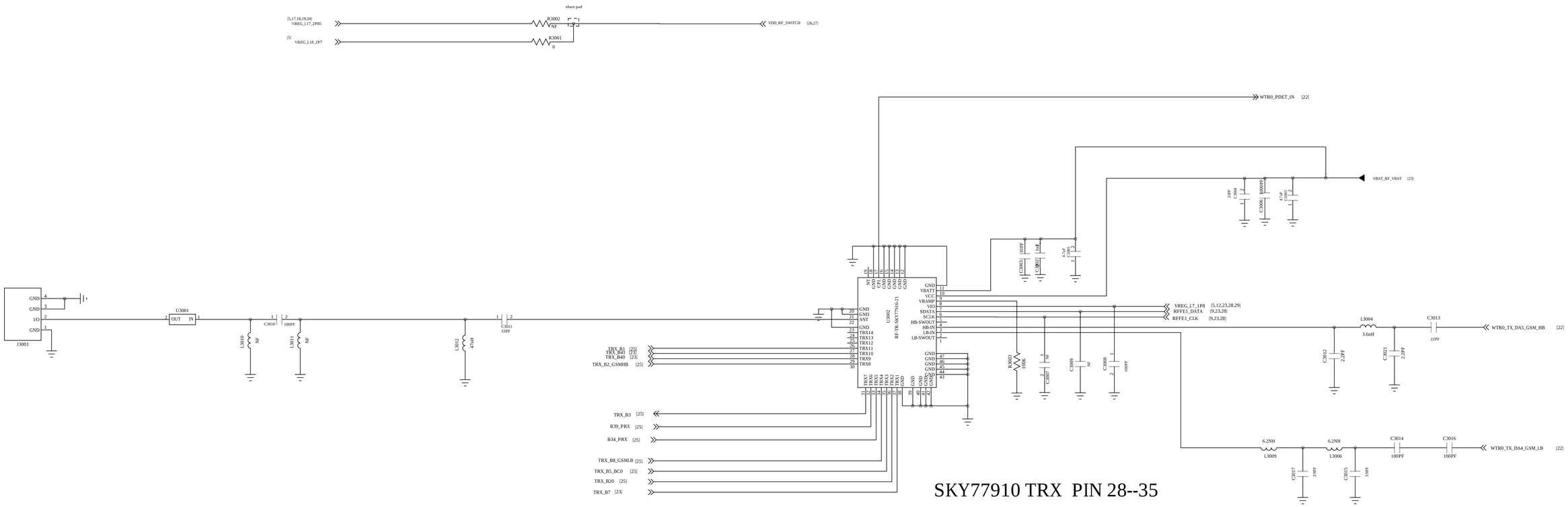

TITLE:	82918	REV:	M10
DOCUMENT NO.:	30_SKY77916	SIZED:	A1
DEPARTMENT:	Hardware DEPT.		
COMPANY:	WINGTECH		
DESIGNER: <DESIGNER>	Last Saved Date: 2015/9/21	SHEET: 24 OF 30	

BandB20

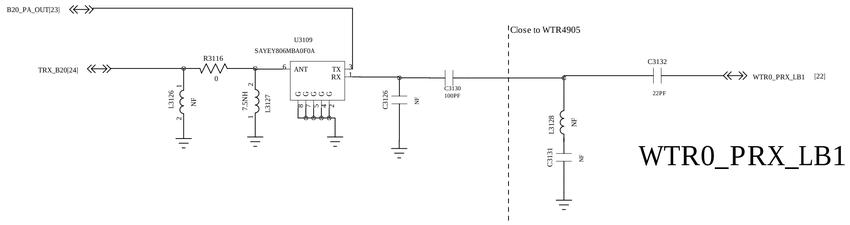

WTR0_PRX_LB1

Band5

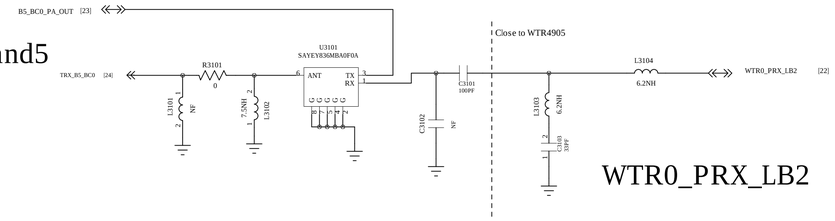

WTR0_PRX_LB2

Band8 &GSM SAWLESS

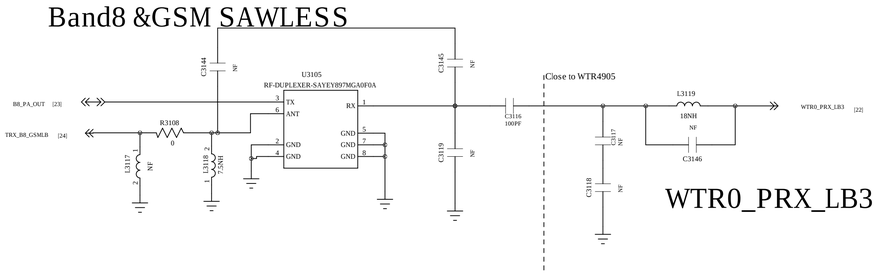

WTR0_PRX_LB3

Band40/B41

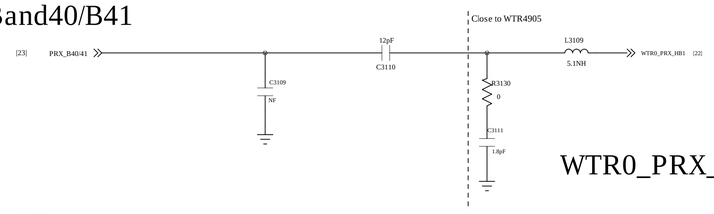

WTR0_PRX_HB1

Band7

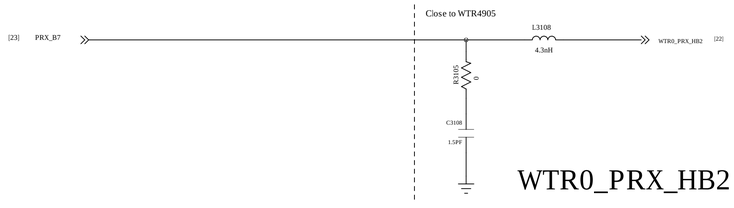

WTR0_PRX_HB2

Band2 & GSM HB SAWLESS

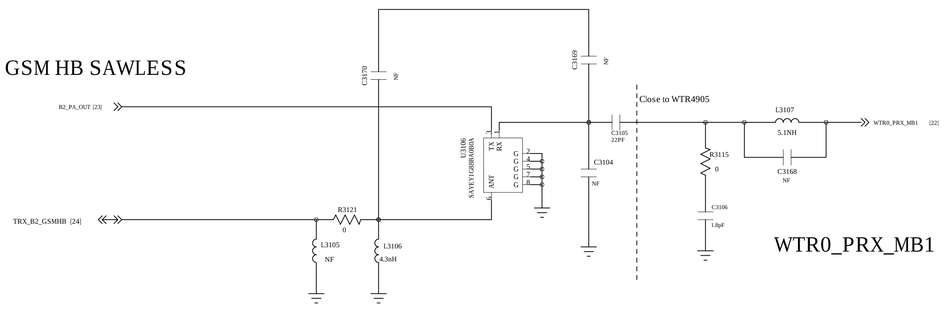

WTR0_PRX_MB1

Band1

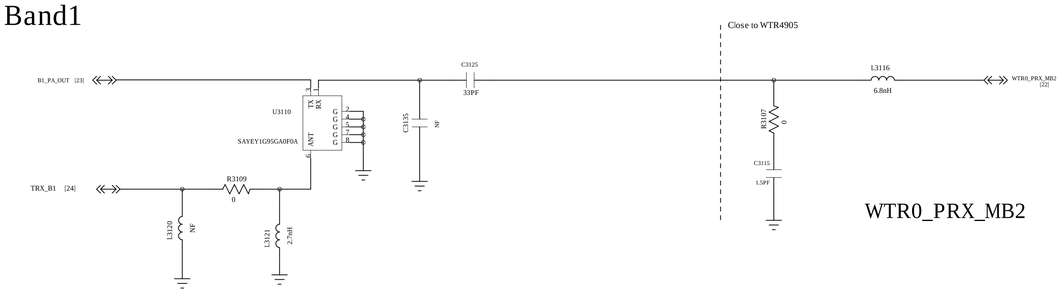

WTR0_PRX_MB2

Band34

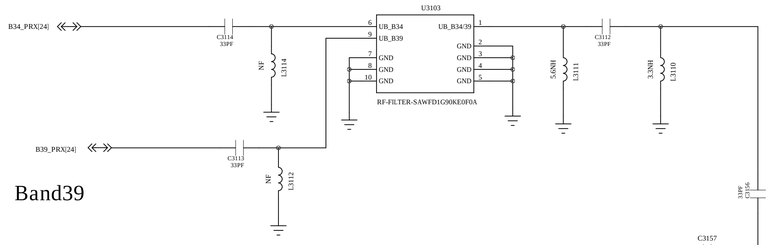

Band39

Band3

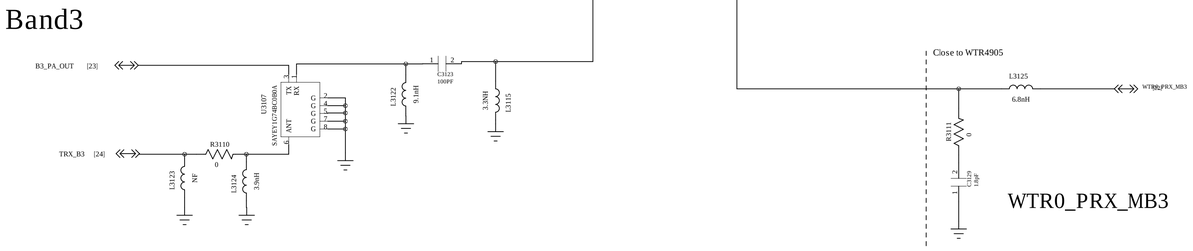

WTR0_PRX_MB3

TITLE:	82918	REV:	M10
DOCUMENT NO.:	31_PRX	SIZED:	A1
DEPARTMENT:	Hardware DEPT.		
COMPANY:	WINGTECH		
DESIGNER: <DESIGNER>	Last Saved Date: 2015/9/21	SHEET: 25 OF 30	

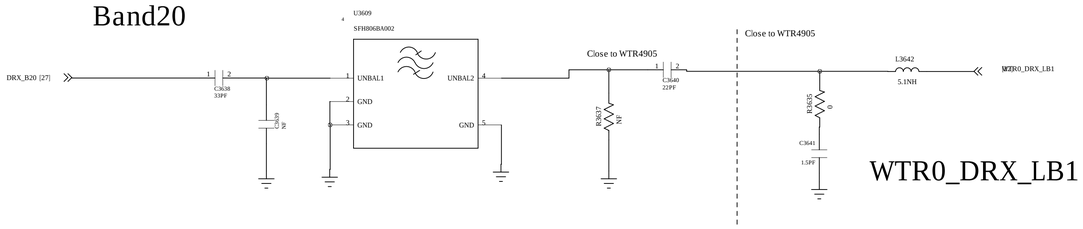

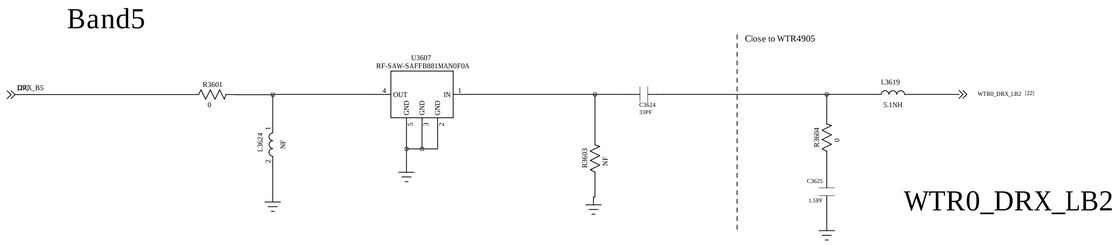

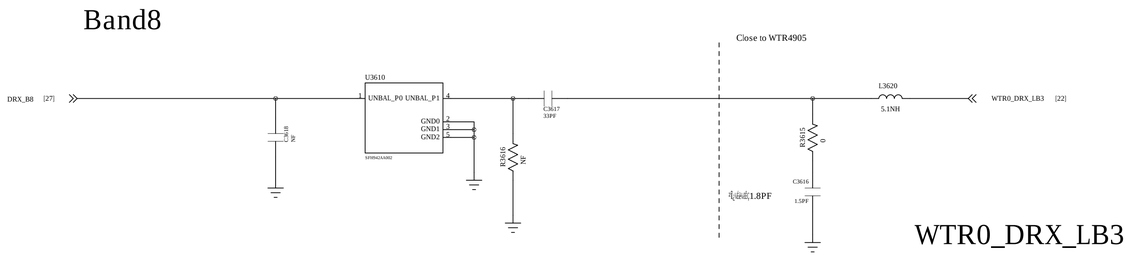

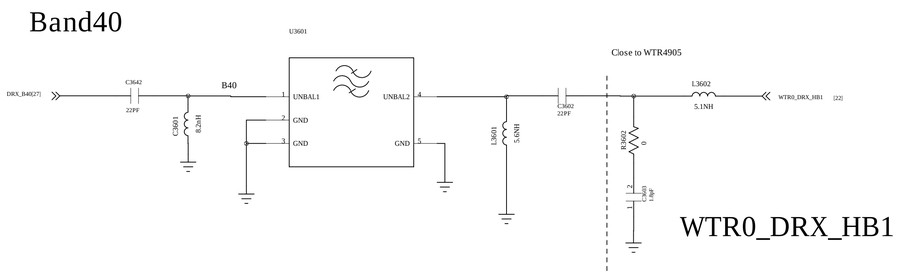

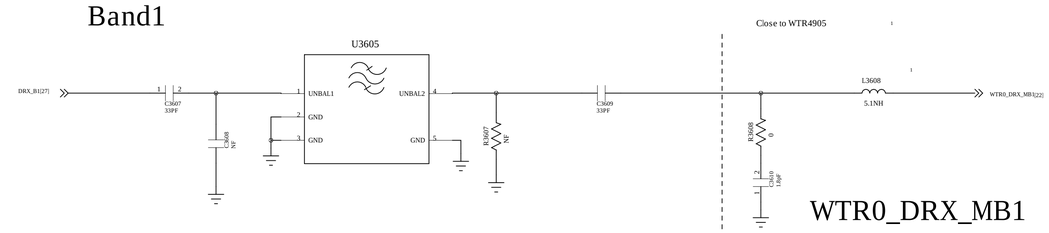

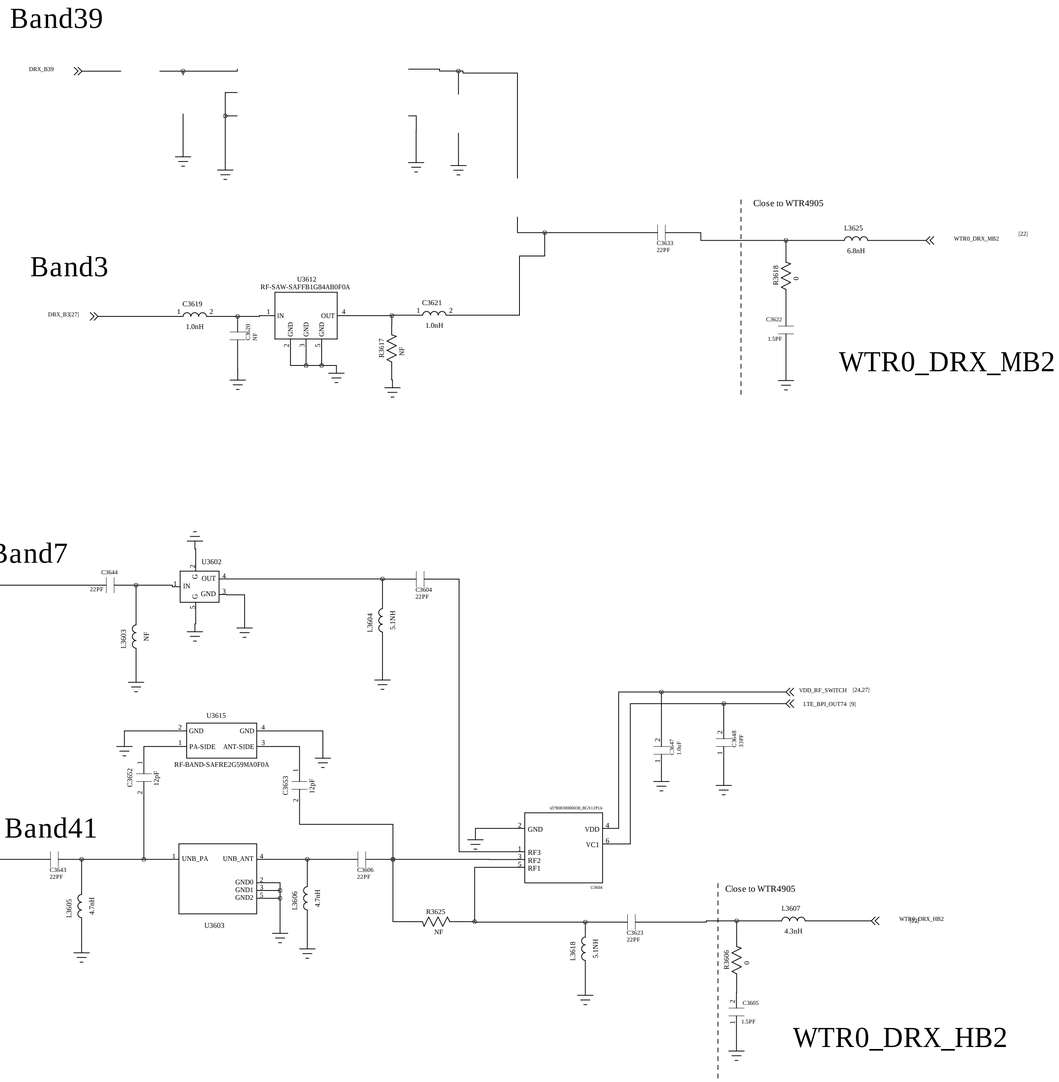

TITLE:	82918	REV:	M10
DOCUMENT NO.:	36_DRX	SIZED:	A1
DEPARTMENT:	Hardware DEPT.		
COMPANY:	WINGTECH		
DESIGNER: <DESIGNER>	Last Saved Date: 2015/9/21	SHEET: 26 OF 30	

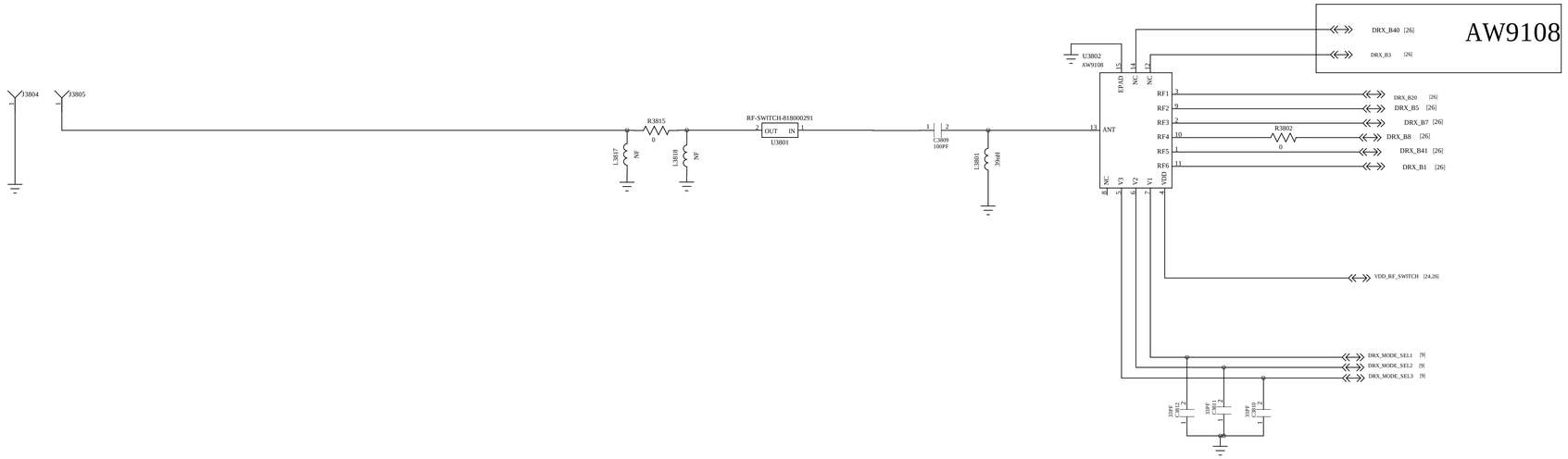

TITLE:	82918	REV:	M10
DOCUMENT NO.:	38_DRX_ANTENNA_SWITCH	SIZED:	A1
DEPARTMENT:	Hardware DEPT.		
COMPANY:	WINGTECH		
DESIGNER: <DESIGNER>	Last Saved Date: 2015/9/21	SHEET: 27 OF 30	

Note: Use a signle low impedance power plane/fill VPA for all ET PA VCC1/VCC2.

Refer to 80-NA681-91 rev.B or later revisions for more layout details.

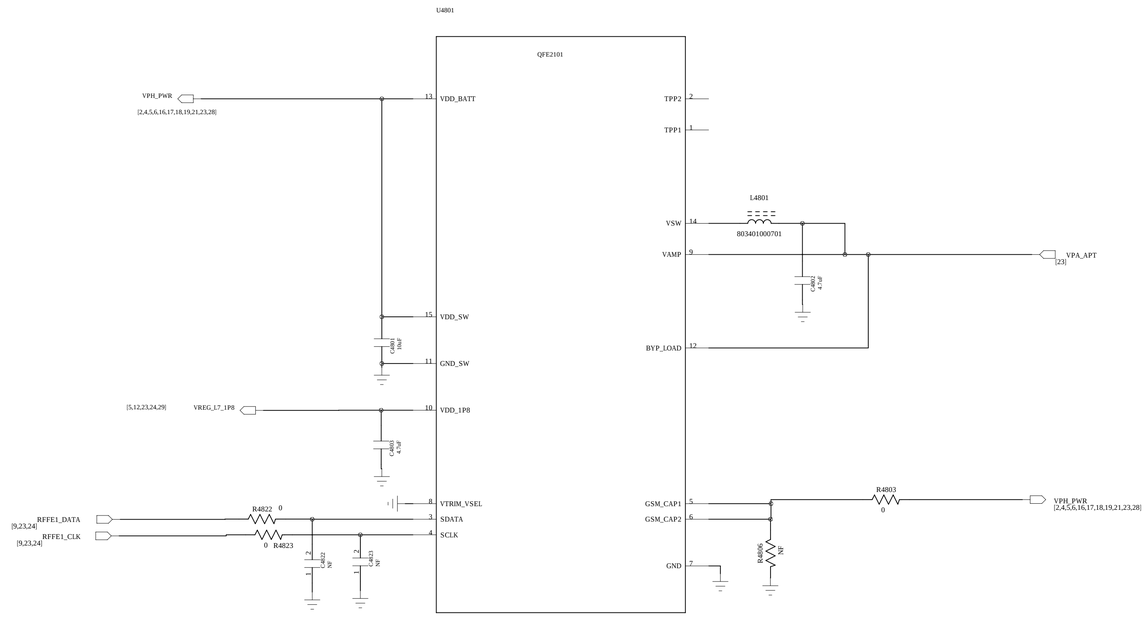

TITLE:	82918	REV:	M10
DOCUMENT NO.:	48_ET_APT	SIZED:	A1
DEPARTMENT:	Hardware DEPT.		
COMPANY:	WINGTECH		
DESIGNER: <DESIGNER>	Last Saved Date: 2015/9/21	SHEET: 28 OF 30	

WIFI/BT

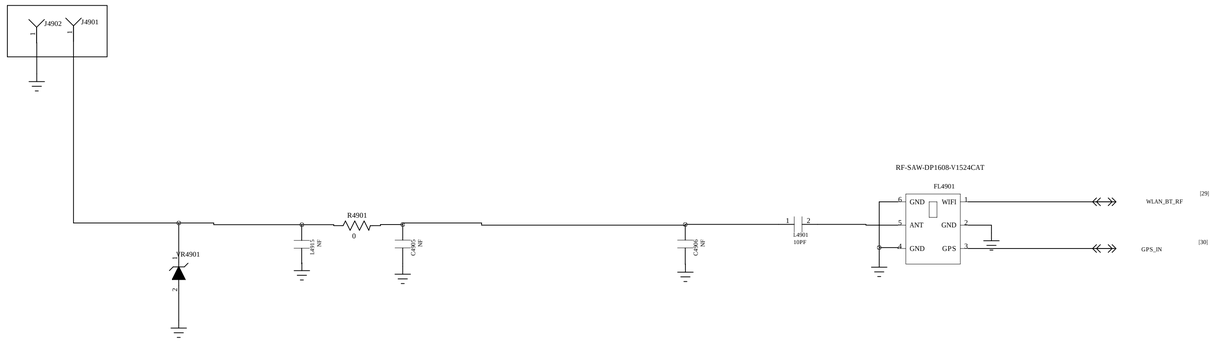

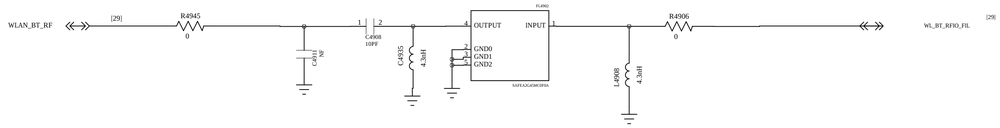

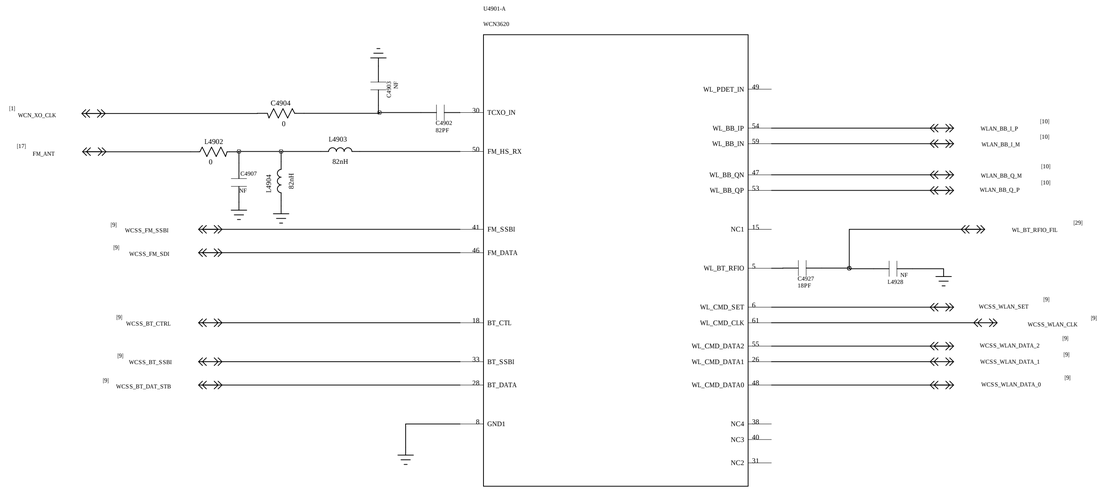

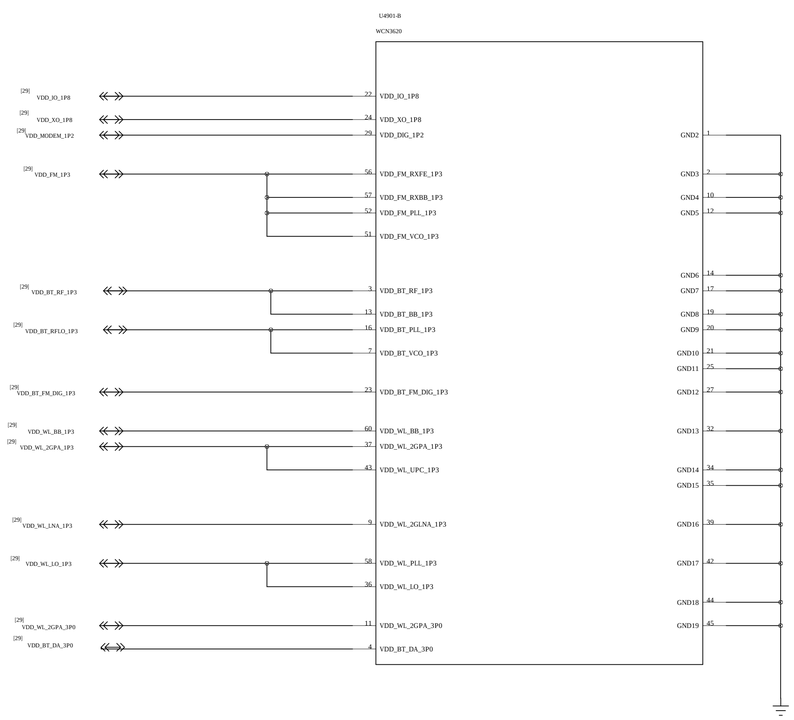

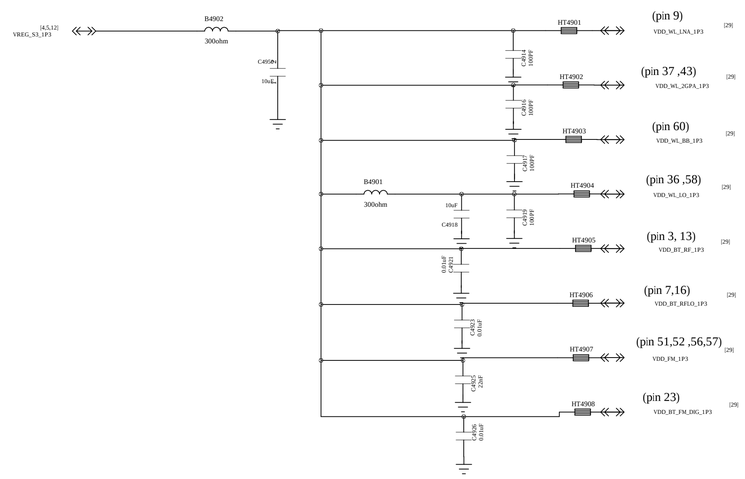

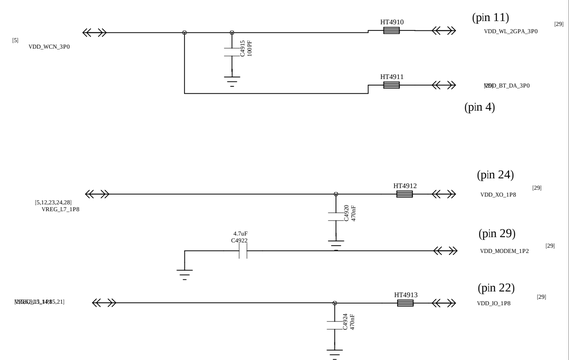

TITLE:	82918	REV:	M10
DOCUMENT NO.:	49_WCN3620	SIZED:	A1
DEPARTMENT:	Hardware DEPT.		
COMPANY:	WINGTECH		
DESIGNER: <DESIGNER>	Last Saved Date: 2015/9/21	SHEET: 29 OF 30	

GPS

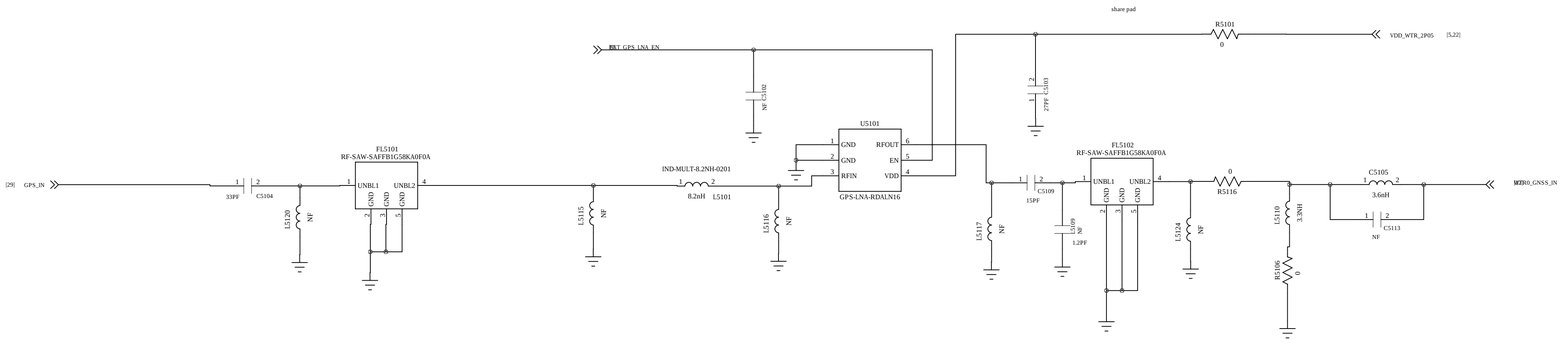

XO DISTRIBUTION

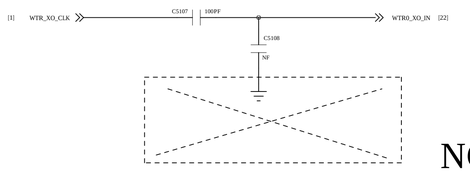

NC

TITLE:	82918	REV:	M10
DOCUMENT NO.:	51_GPS/XO_DISTRIBUTOR	SIZED:	A1
DEPARTMENT:	Hardware DEPT.		
COMPANY:	WINGTECH		
DESIGNER: <DESIGNER>	Last Saved Date: 2015/9/21	SHEET: 30 OF 30	