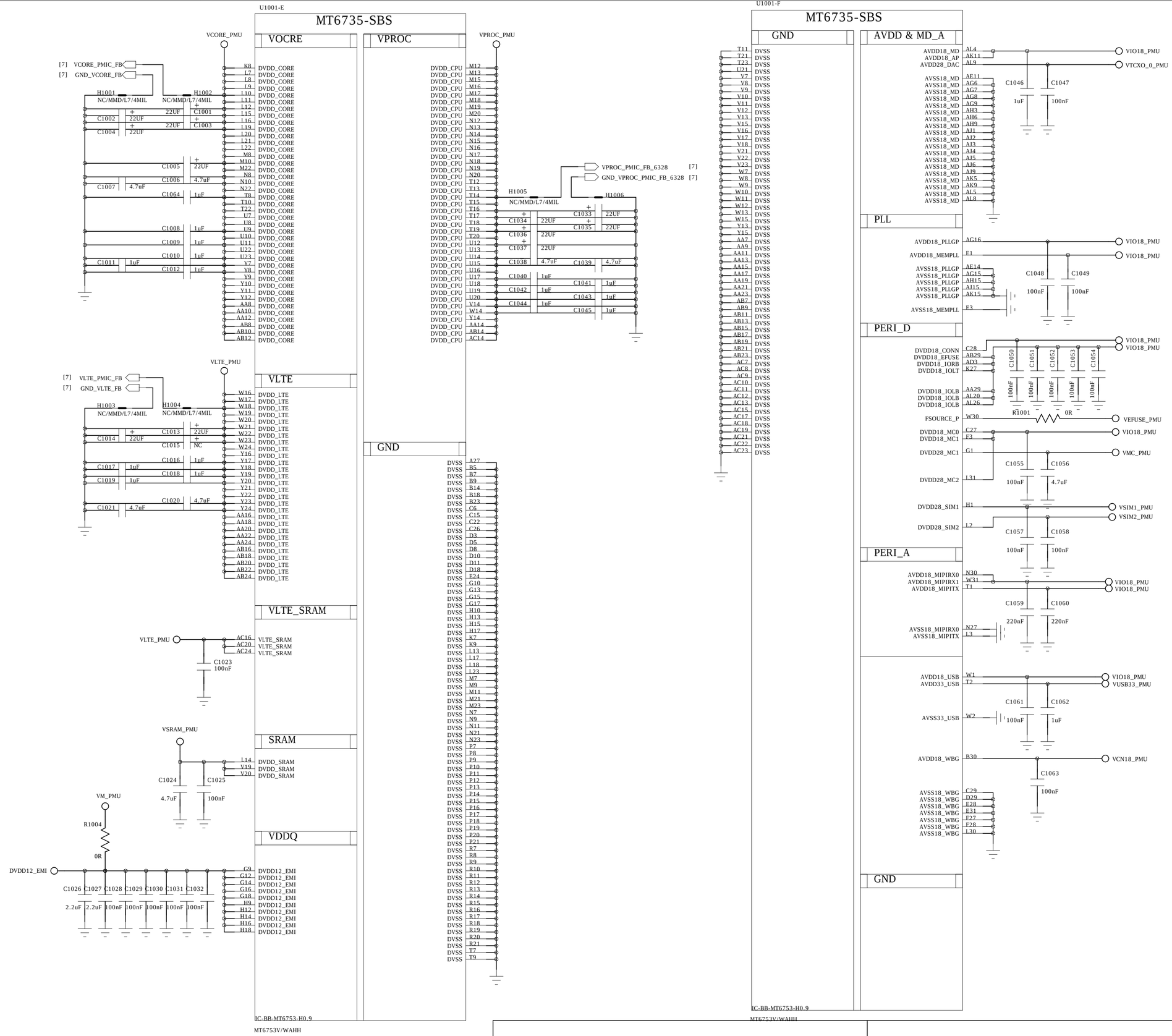

REVISION RECORD			
LTR	ECO NO:	APPROVED:	DATE:

SN1001 LOGO1001 QC1002 WPL1001 SH1001 SH1002 SH1003 MARK1001
SN1002 QC1001 QC1003 SH1004 SH1005 SH1006 SH1007 MARK1002

COMPANY: TRANSSION HOLDINGS				MODEL: H5312	Modified Date: 2017/2/6
DRAWN	jun.zhu	DATED	20160906	TITLE: 10_BB_POWER	VERSION: V1.0
CHECKED	<CHECKED>	DATED	< >	Confidentiality CONFIDENTIAL	SHEET: 3 OF 21

REVISION RECORD			
LTR	ECO NO:	APPROVED:	DATE:

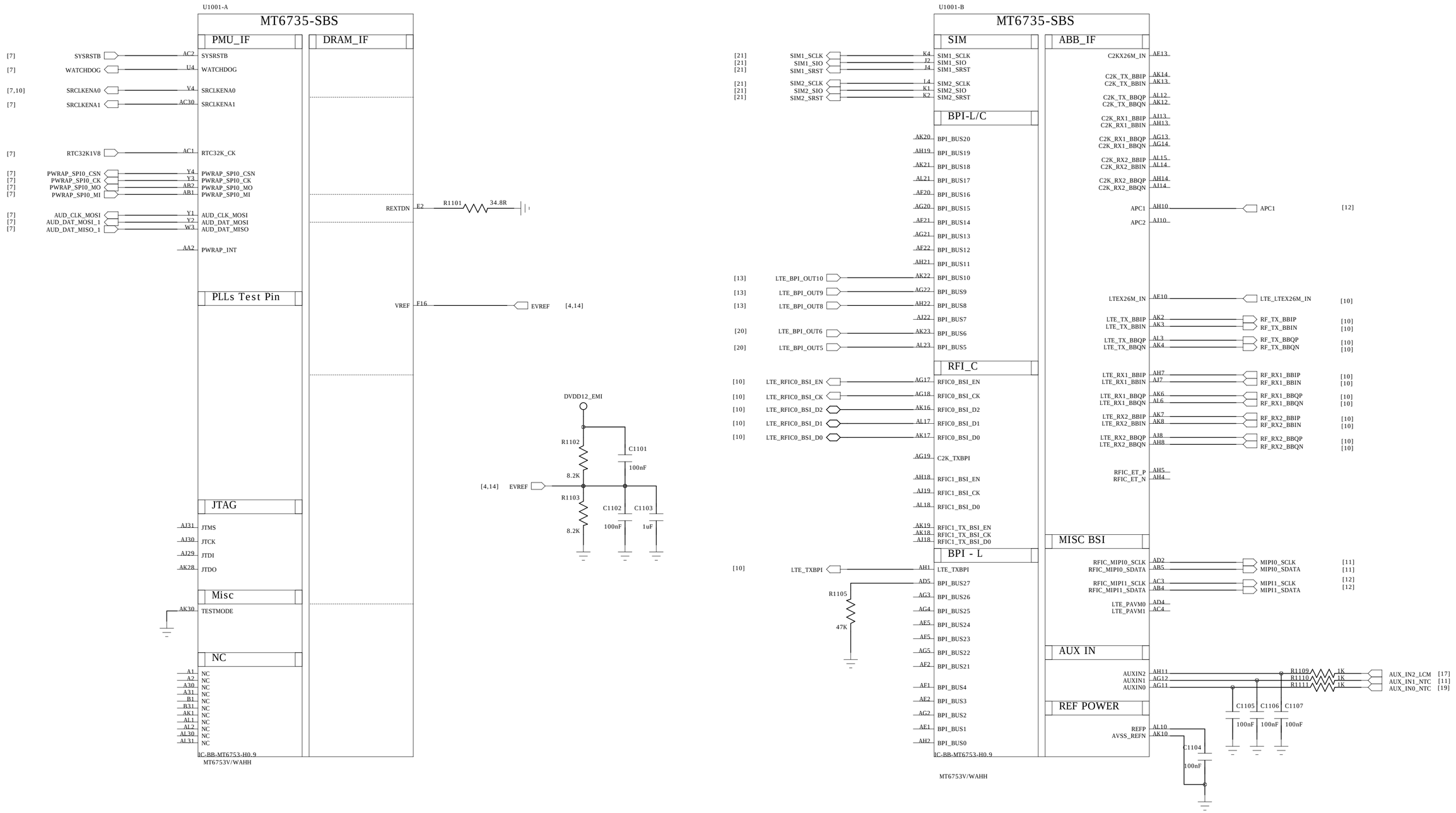

COMPANY: TRANSSION HOLDINGS				MODEL: H5312		Modified Date: 2017/2/6
DRAWN	jun.zhu	DATED	20160906	TITLE: 11_BB_I		VERSION: V1.0
CHECKED	<CHECKED>	DATED	< >	Confidentiality	CONFIDENTIAL	SHEET: 4 OF 21

REVISION RECORD			
LTR	ECO NO:	APPROVED:	DATE:

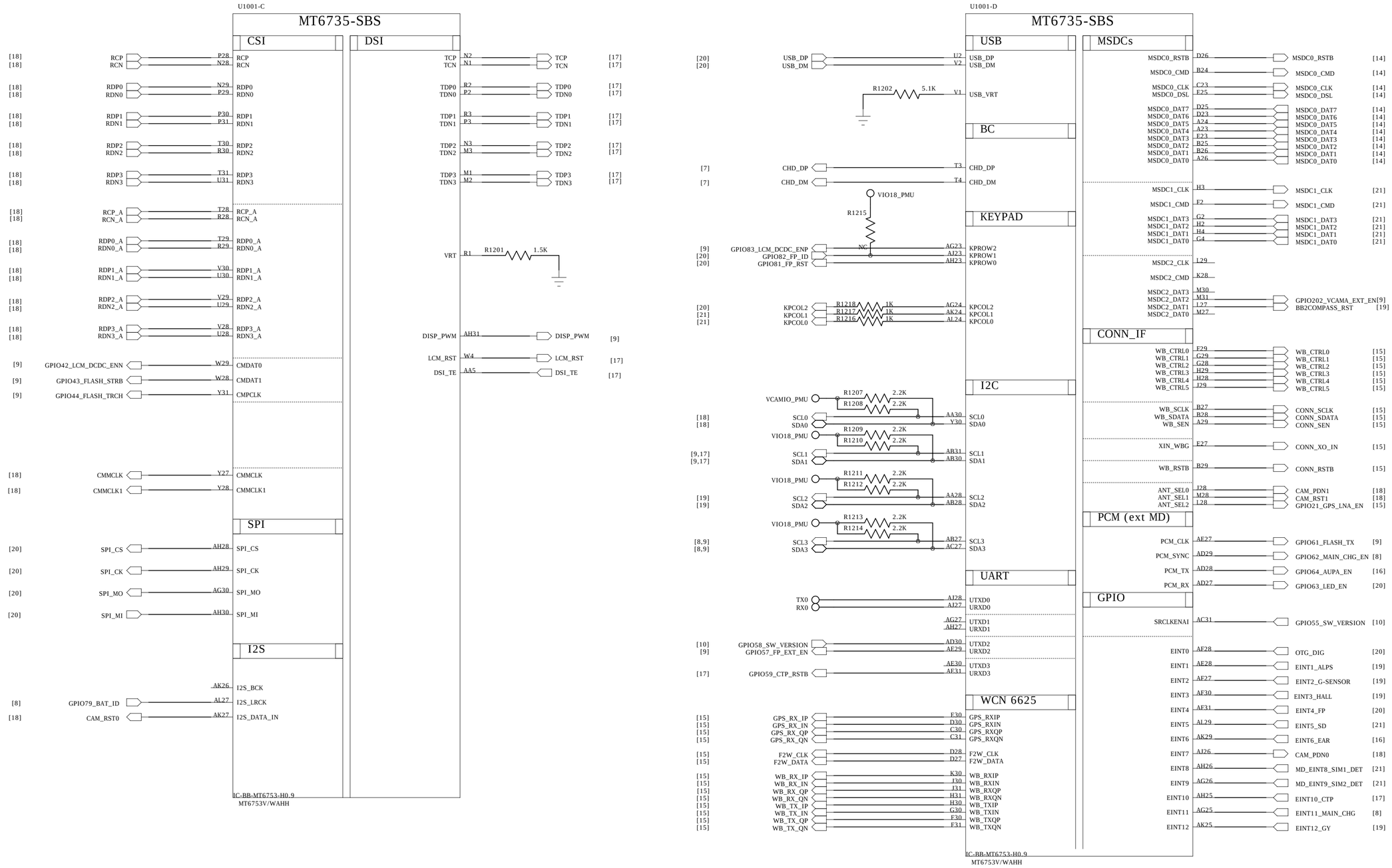

COMPANY: TRANSSION HOLDINGS				MODEL: H5312		Modified Date: 2017/2/6
DRAWN	jun.zhu	DATED	20160906	TITLE: 12_BB_II		VERSION: V1.0 / SHEET: 5 OF 21
CHECKED	<CHECKED>	DATED	< >	Confidentiality	CONFIDENTIAL	

REVISION RECORD			
LTR	ECO NO:	APPROVED:	DATE:

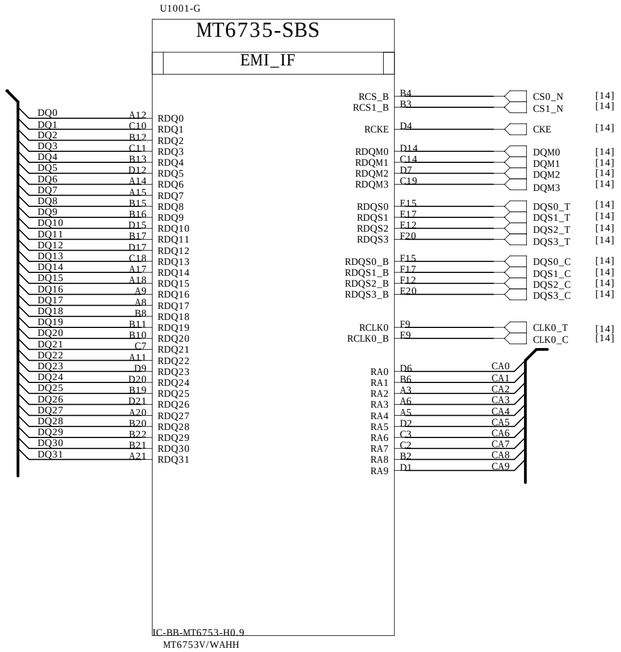

COMPANY: TRANSSION HOLDINGS				MODEL: H5312		Modified Date: 2017/2/6
DRAWN	jun.zhu	DATED	20160906	TITLE: 13_BB_III		VERSION: V1.0 / SHEET: 6 OF 21
CHECKED	<CHECKED>	DATED	< >	Confidentiality	CONFIDENTIAL	

REVISION RECORD			
LTR	ECO NO:	APPROVED:	DATE:

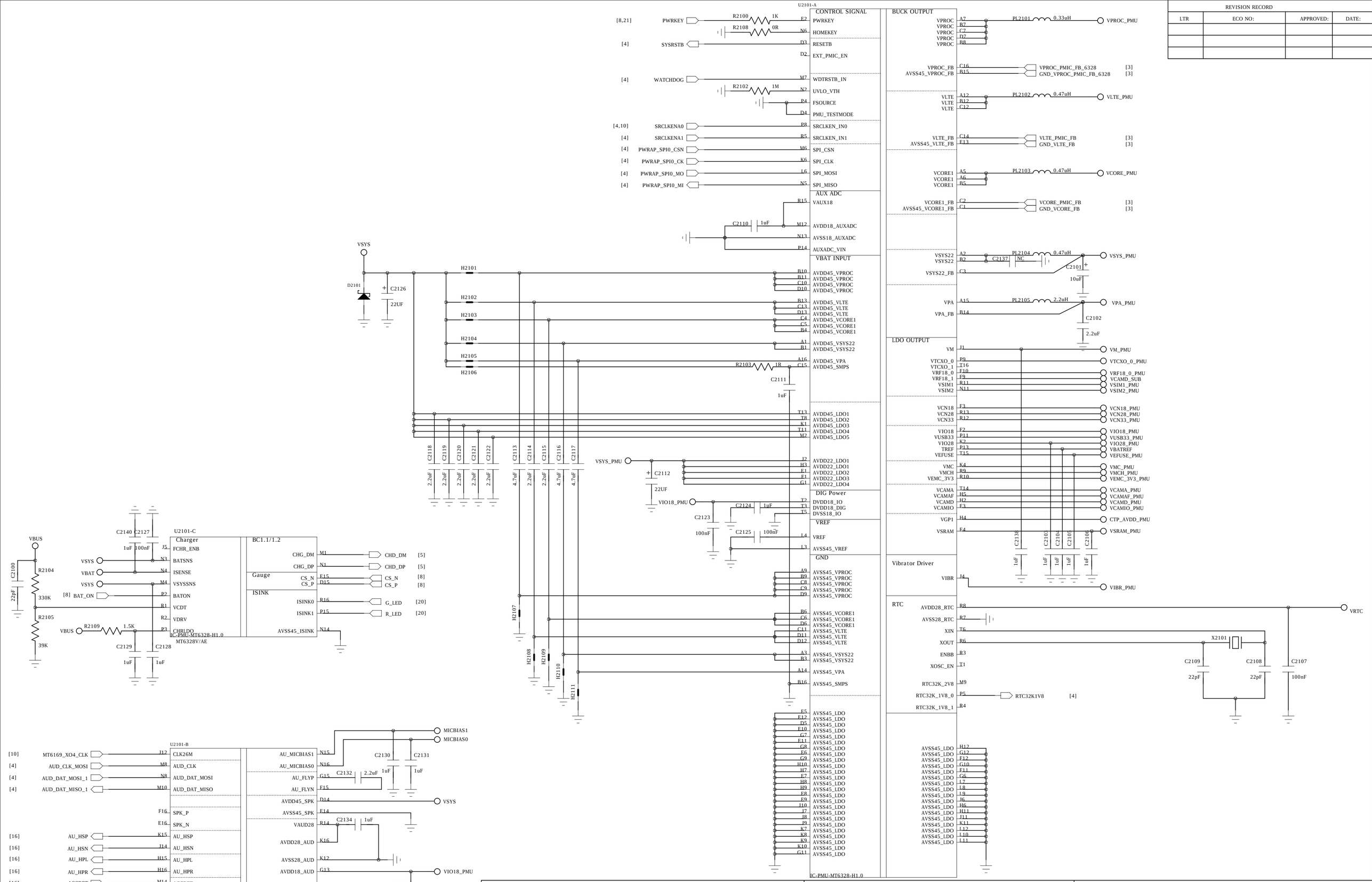

COMPANY: TRANSSION HOLDINGS				MODEL: MT6328V/AE H5312		Modified Date: 2017/2/6	
DRAWN	jun.zhu	DATED	20160906	TITLE: 21_POWER_MT6328		VERSION: V1.0	SHEET: 7 OF 21
CHECKED	<CHECKED>	DATED	< >	Confidentiality	CONFIDENTIAL		

REVISION RECORD			
LTR	ECO NO:	APPROVED:	DATE:

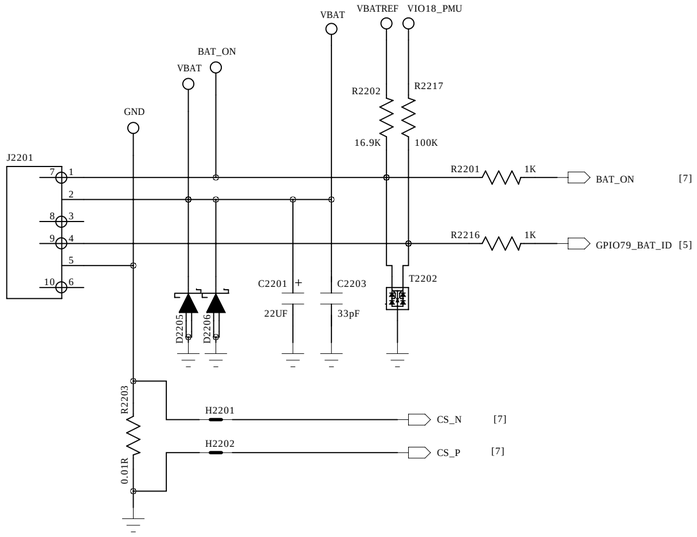

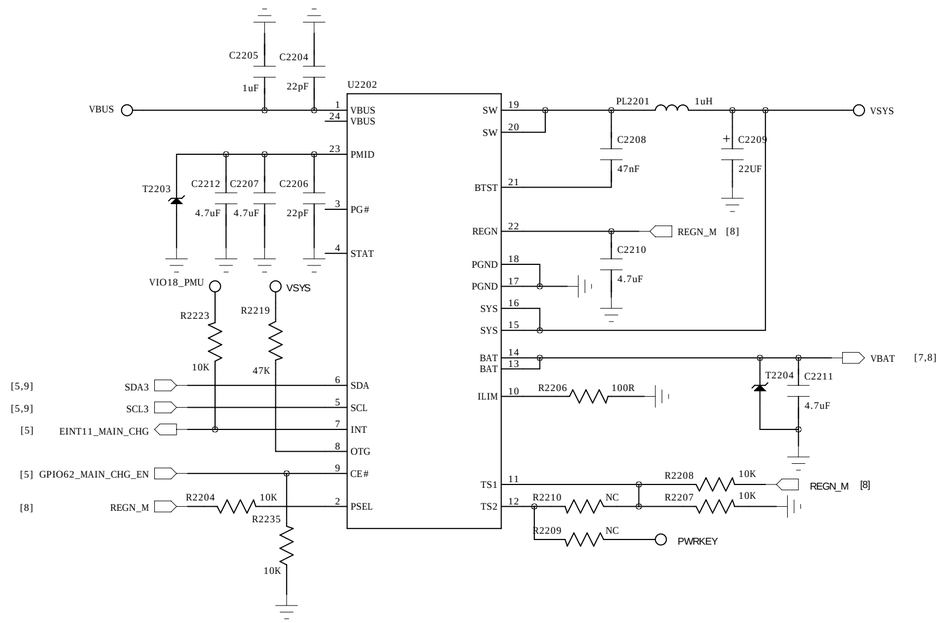

COMPANY: TRANSSION HOLDINGS				MODEL: H5312		Modified Date: 2017/2/6
DRAWN	jun.zhu	DATED	20160906	TITLE: 22_POWER_CHG		VERSION: V1.0 / SHEET: 8 OF 21
CHECKED	<CHECKED>	DATED	< >	Confidentiality	CONFIDENTIAL	

REVISION RECORD			
LTR	ECO NO:	APPROVED:	DATE:

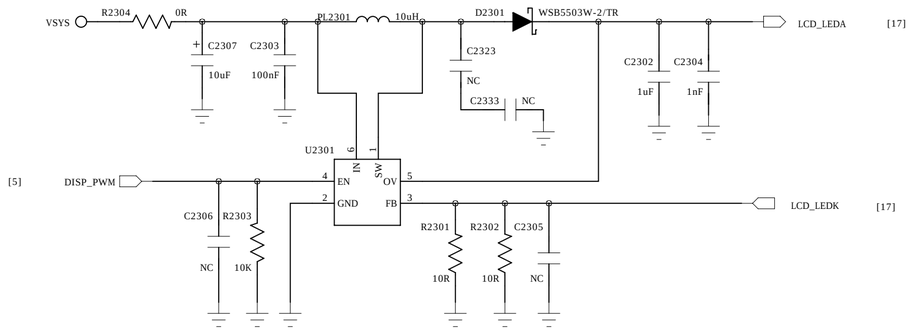

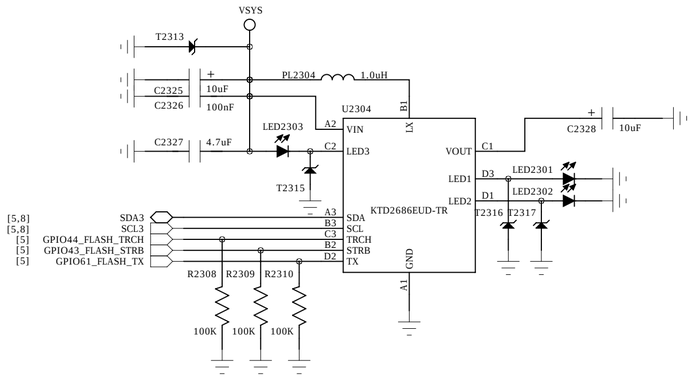

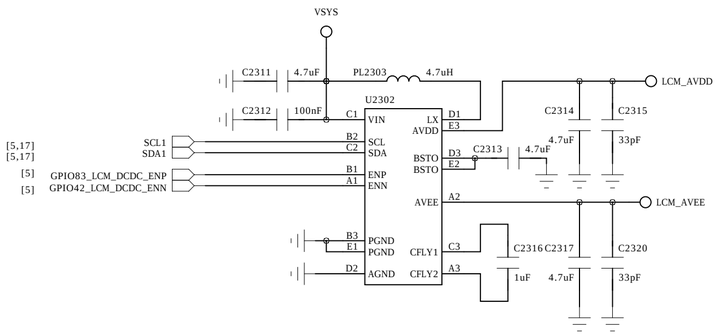

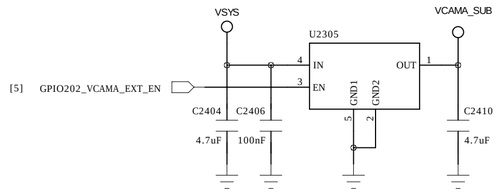

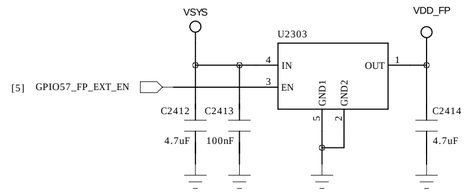

COMPANY: TRANSSION HOLDINGS				MODEL: H5312		Modified Date: 2017/2/6
DRAWN	jun.zhu	DATED	20160906	TITLE: 23_POWER_LCM/FLASH		VERSION: V1.0 / SHEET: 9 OF 21
CHECKED	<CHECKED>	DATED	< >	Confidentiality	CONFIDENTIAL	

REVISION RECORD			
LTR	ECO NO:	APPROVED:	DATE:

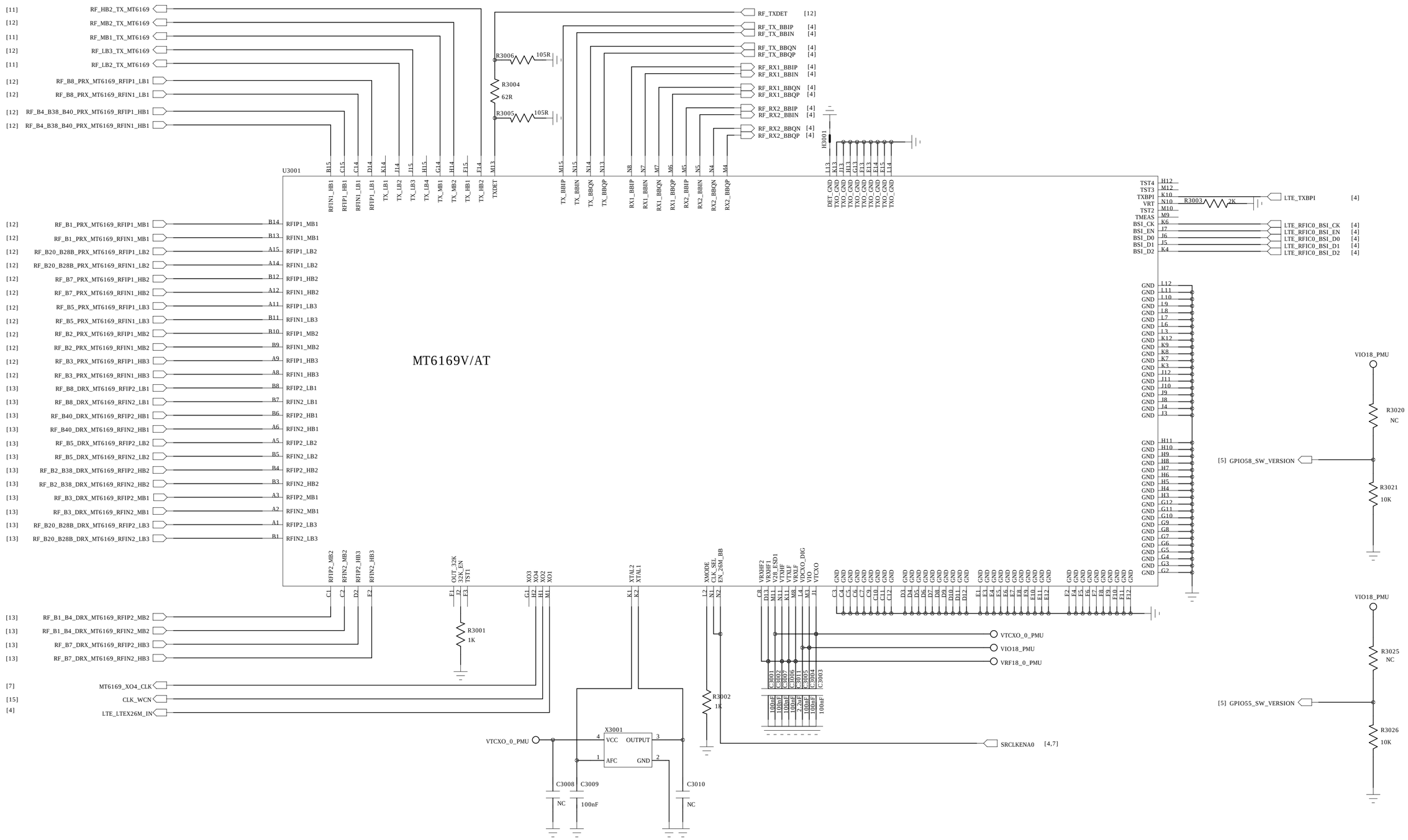

COMPANY: TRANSSION HOLDINGS				MODEL: H5312		Modified Date: 2017/2/6
DRAWN	jun.zhu	DATED	20160906	TITLE: 30_RF_MT6169_PIN_OUT		VERSION: V1.0 / SHEET: 10 OF 21
CHECKED	<CHECKED>	DATED	< >	Confidentiality	CONFIDENTIAL	

REVISION RECORD			
LTR	ECO NO:	APPROVED:	DATE:

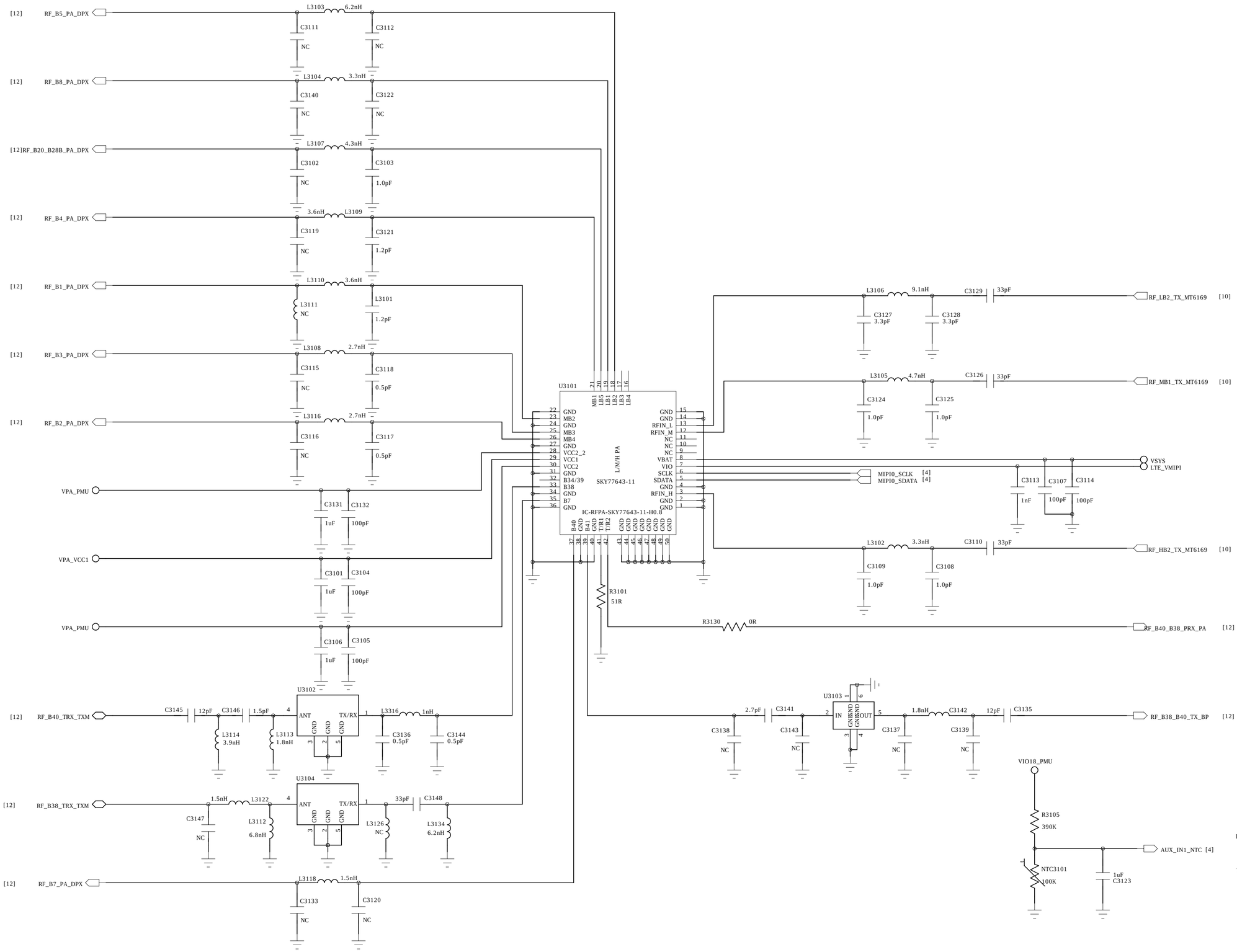

COMPANY: TRANSSION HOLDINGS				MODEL: H5312		Modified Date: 2017/2/6
DRAWN	jun.zhu	DATED	20160906	TITLE: 31_RF_MT6169_RF_TRX		VERSION: V1.0
CHECKED	<CHECKED>	DATED	< >	Confidentiality	CONFIDENTIAL	SHEET: 11 OF 21

REVISION RECORD			
LTR	ECO NO:	APPROVED:	DATE:

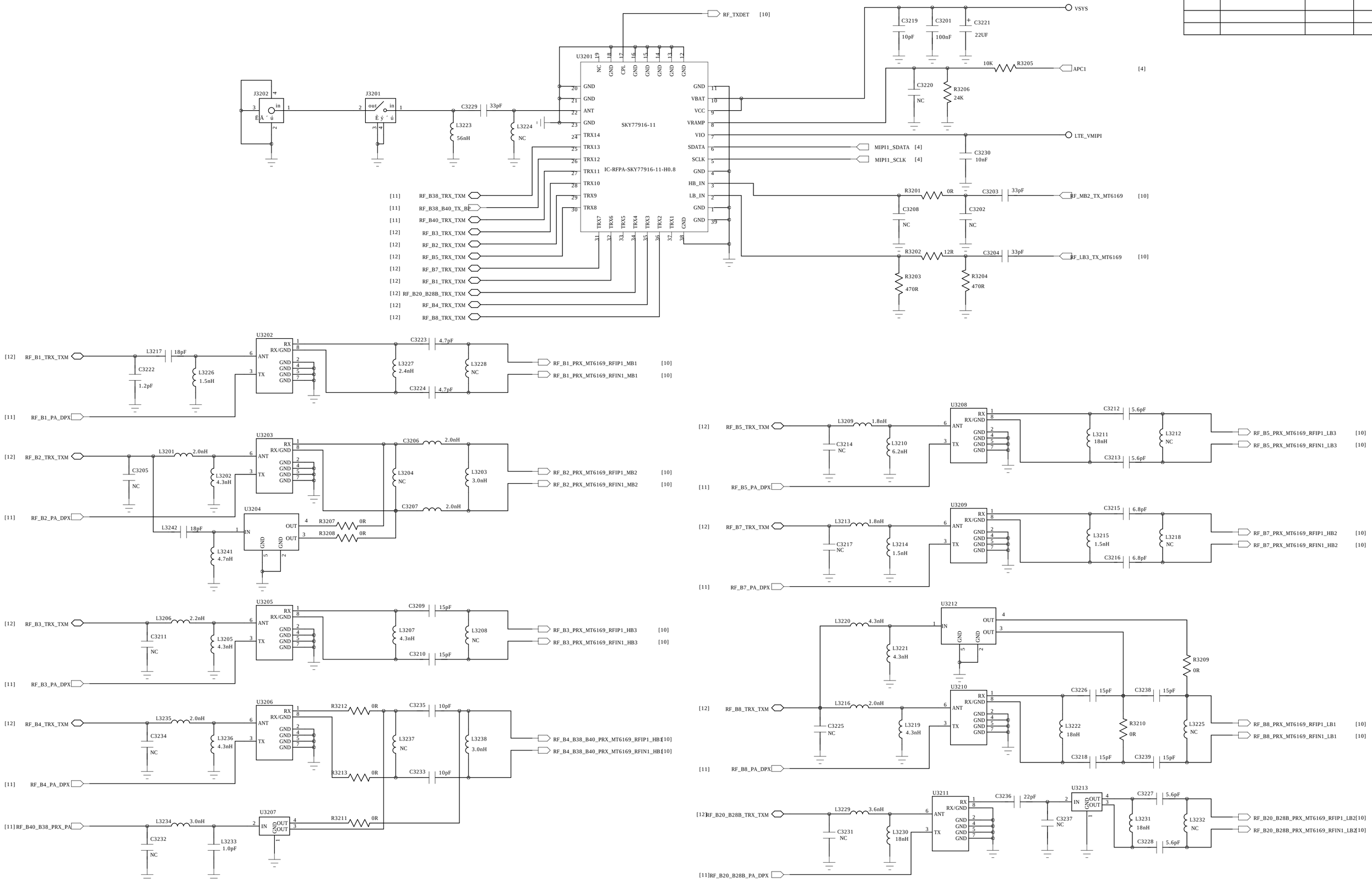

COMPANY: TRANSSION HOLDINGS				MODEL: H5312		Modified Date: 2017/2/6
DRAWN	jun.zhu	DATED	20160906	TITLE: 32_RF_MT6169_RF_PRX		VERSION: V1.0
CHECKED	<CHECKED>	DATED	< >	Confidentiality	CONFIDENTIAL	SHEET: 12 OF 21

REVISION RECORD			
LTR	ECO NO:	APPROVED:	DATE:

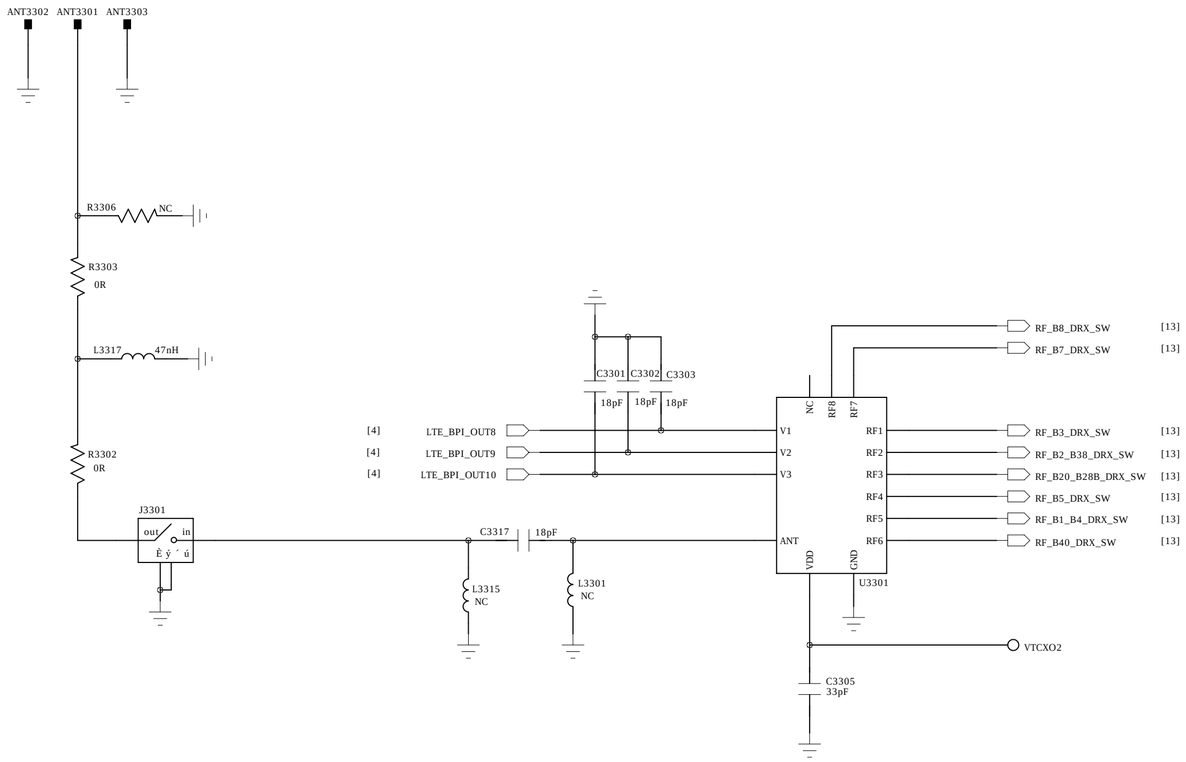

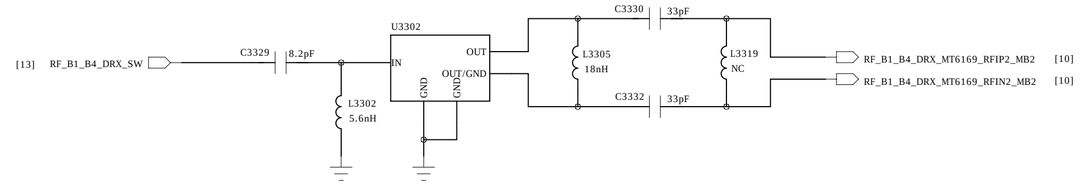

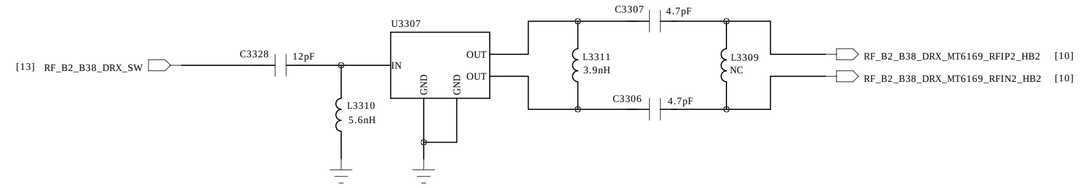

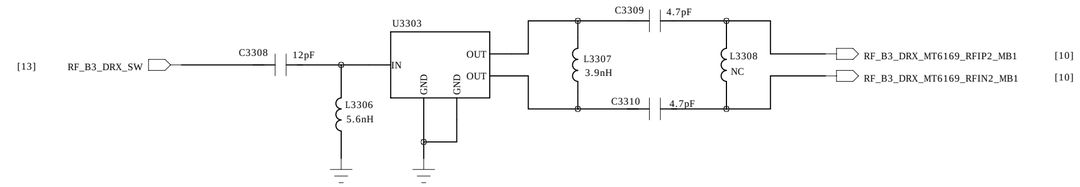

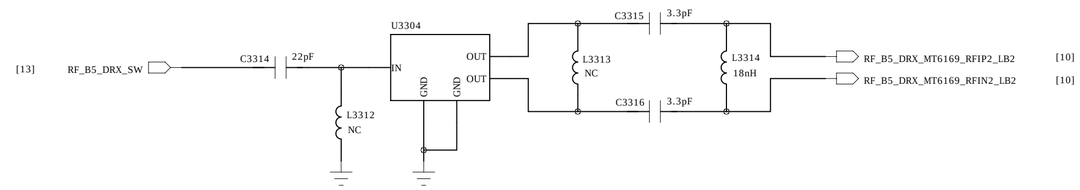

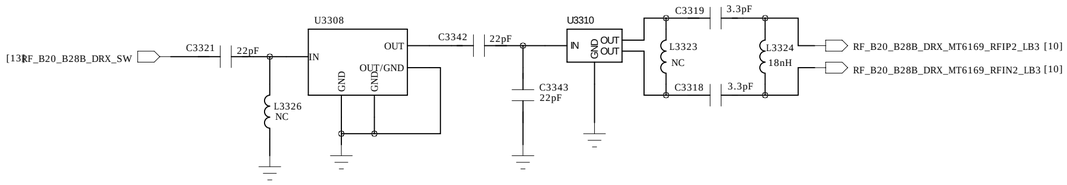

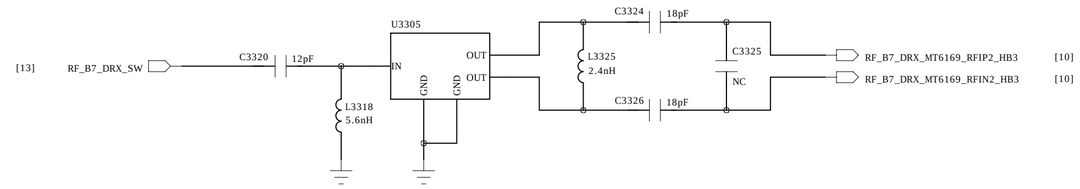

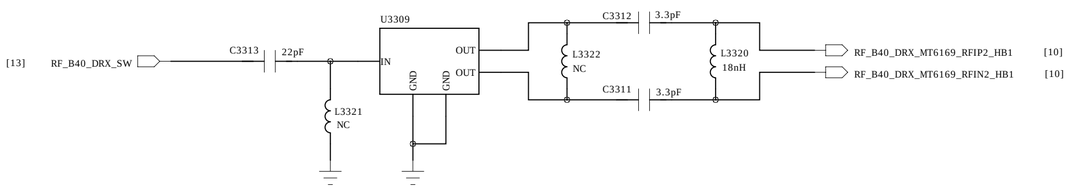

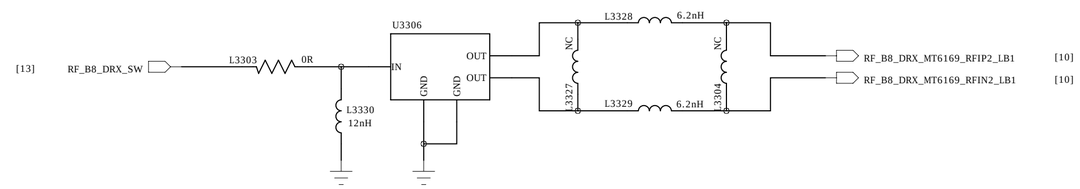

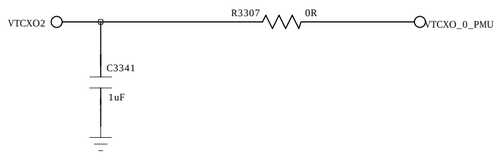

COMPANY: TRANSSION HOLDINGS				MODEL: H5312		Modified Date: 2017/2/6
DRAWN	jun.zhu	DATED	20160906	TITLE: 33_RF_MT6169_RF_DRX		VERSION: V1.0
CHECKED	<CHECKED>	DATED	< >	Confidentiality	CONFIDENTIAL	SHEET: 13 OF 21

REVISION RECORD			
LTR	ECO NO:	APPROVED:	DATE:

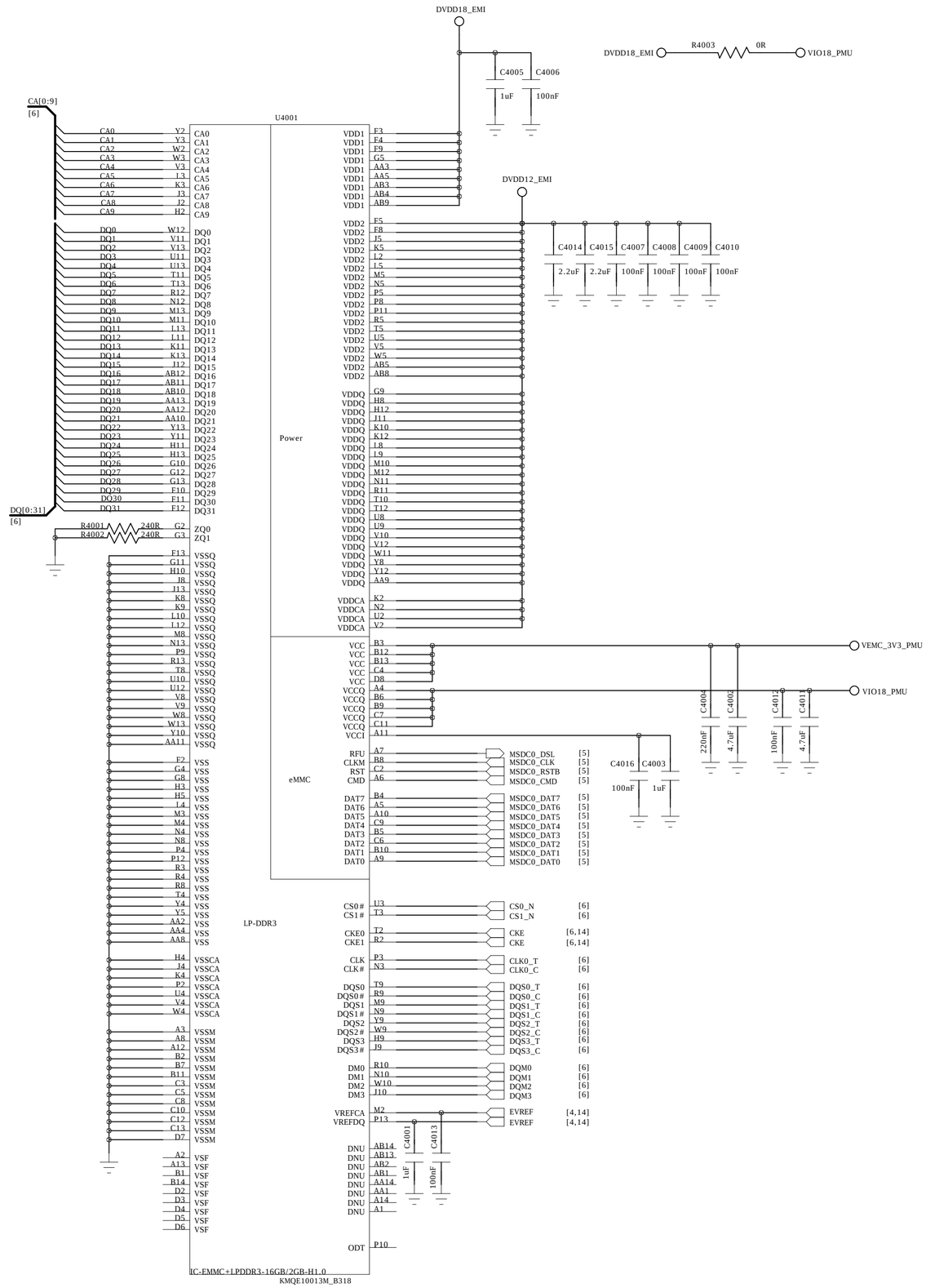

COMPANY: TRANSSION HOLDINGS				MODEL: H5312		Modified Date: 2017/2/6
DRAWN	jun.zhu	DATED	20160906	TITLE: 40_MEMORY_EMMC_LPDDR3		VERSION: V1.0
CHECKED	<CHECKED>	DATED	< >	Confidentiality	CONFIDENTIAL	SHEET: 14 OF 21

REVISION RECORD			
LTR	ECO NO:	APPROVED:	DATE:

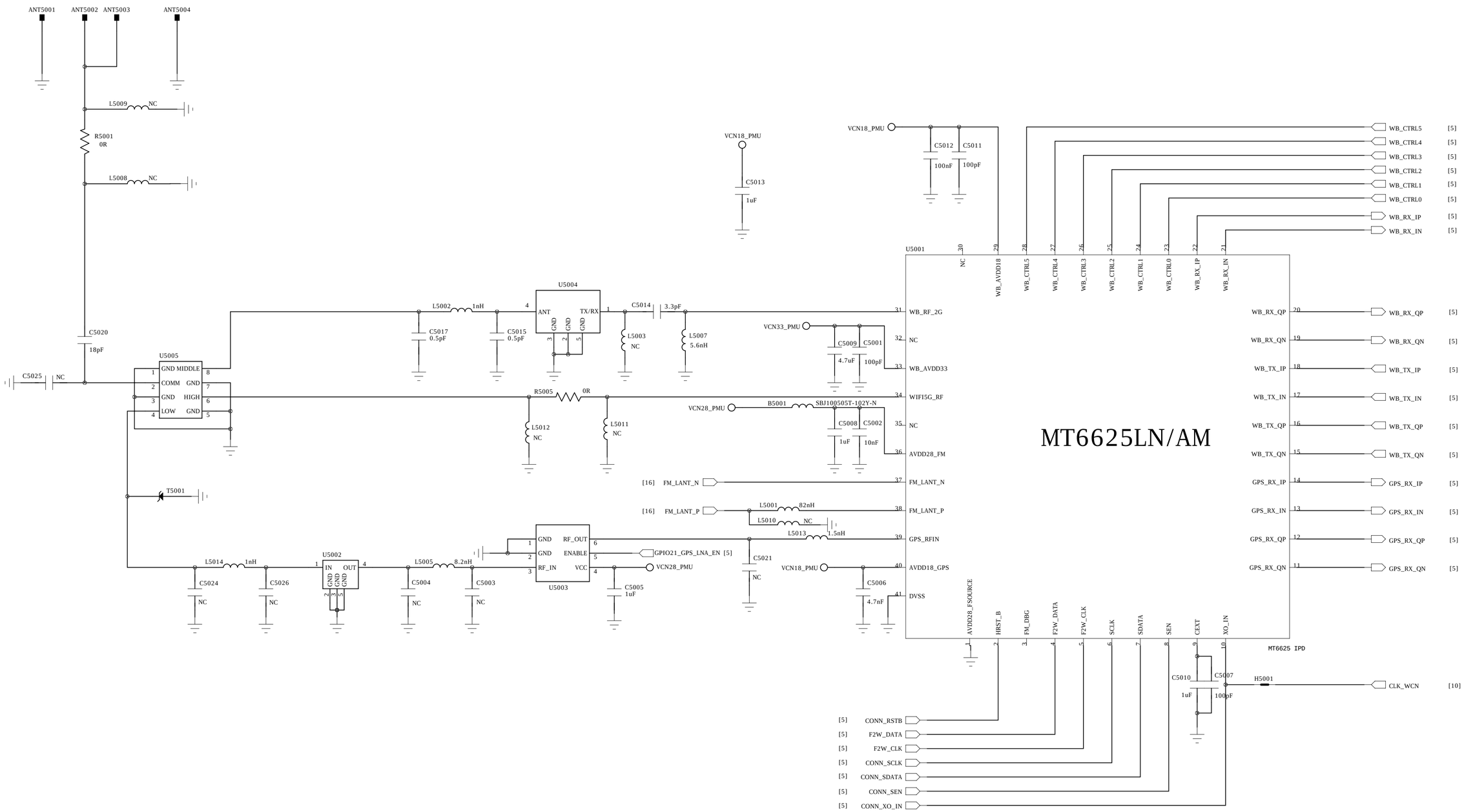

COMPANY: TRANSSION HOLDINGS				MODEL: H5312		Modified Date: 2017/2/6
DRAWN	jun.zhu	DATED	20160906	TITLE: 50_BT/WIFI/GPS/FM_MT6625		VERSION: V1.0 / SHEET: 15 OF 21
CHECKED	<CHECKED>	DATED	< >	Confidentiality	CONFIDENTIAL	

REVISION RECORD			
LTR	ECO NO:	APPROVED:	DATE:

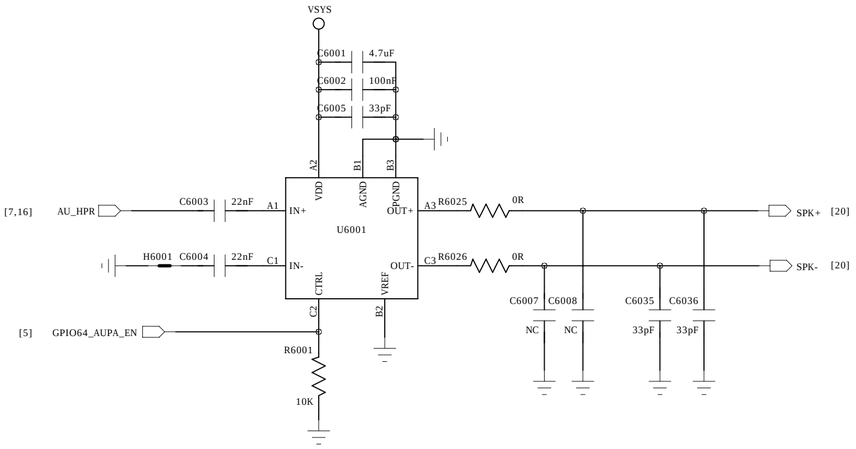

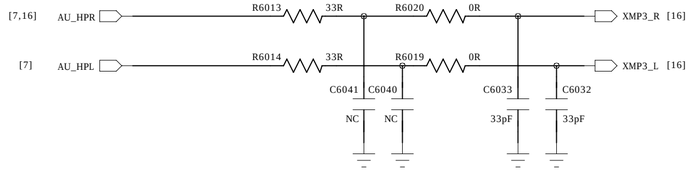

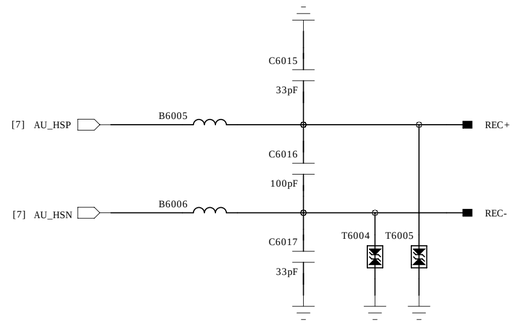

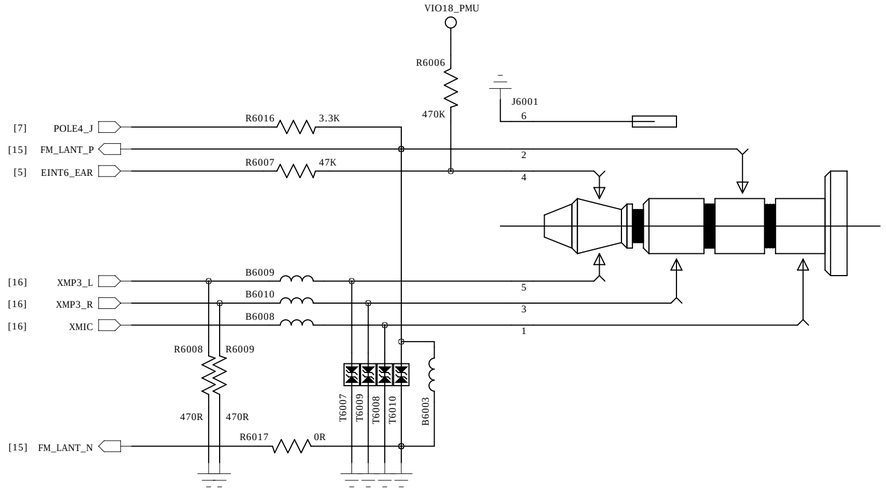

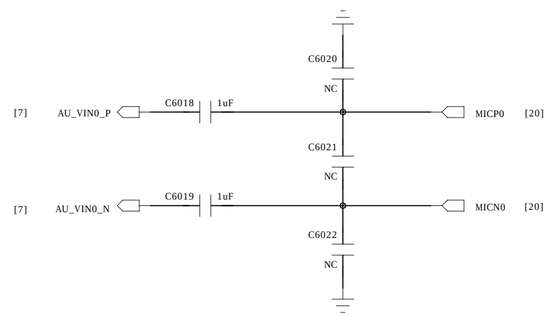

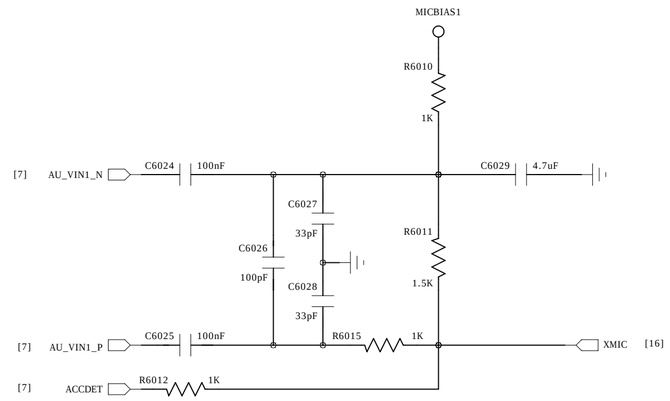

COMPANY: TRANSSION HOLDINGS				MODEL: H5312		Modified Date: 2017/2/6
DRAWN	jun.zhu	DATED	20160906	TITLE: 60_AUDIO		VERSION: V1.0
CHECKED	<CHECKED>	DATED	< >	Confidentiality	CONFIDENTIAL	SHEET: 16 OF 21

REVISION RECORD			
LTR	ECO NO:	APPROVED:	DATE:

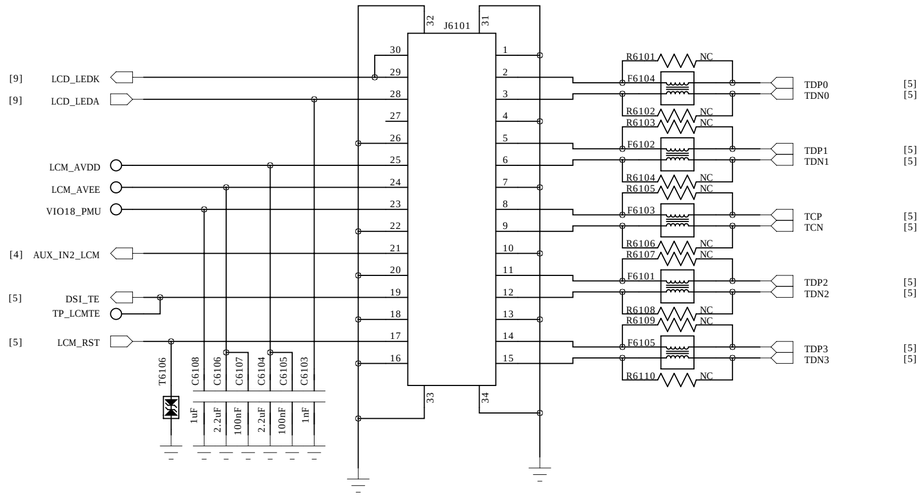

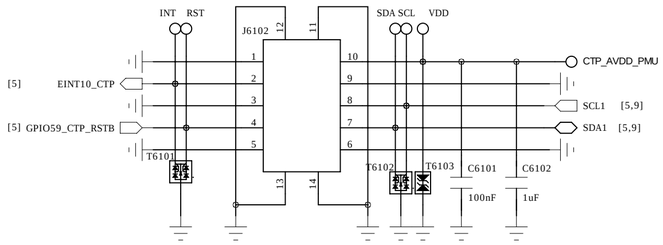

COMPANY: TRANSSION HOLDINGS				MODEL: H5312		Modified Date: 2017/2/6
DRAWN	jun.zhu	DATED	20160906	TITLE: 61_LCD_CTP		VERSION: V1.0 / SHEET: 17 OF 21
CHECKED	<CHECKED>	DATED	< >	Confidentiality	CONFIDENTIAL	

REVISION RECORD			
LTR	ECO NO:	APPROVED:	DATE:

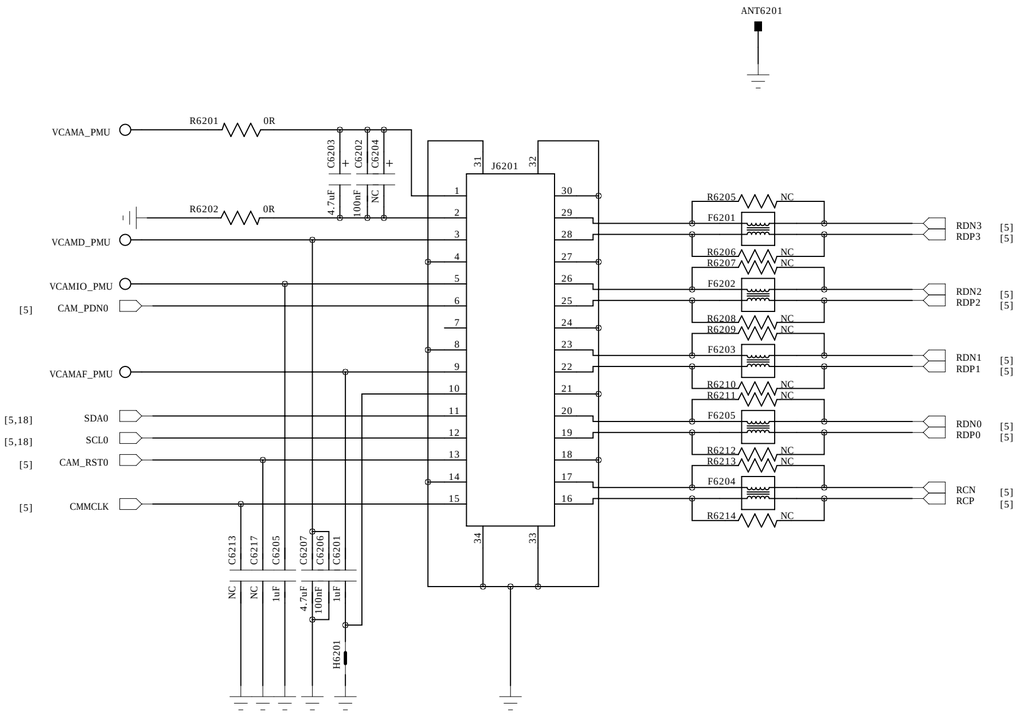

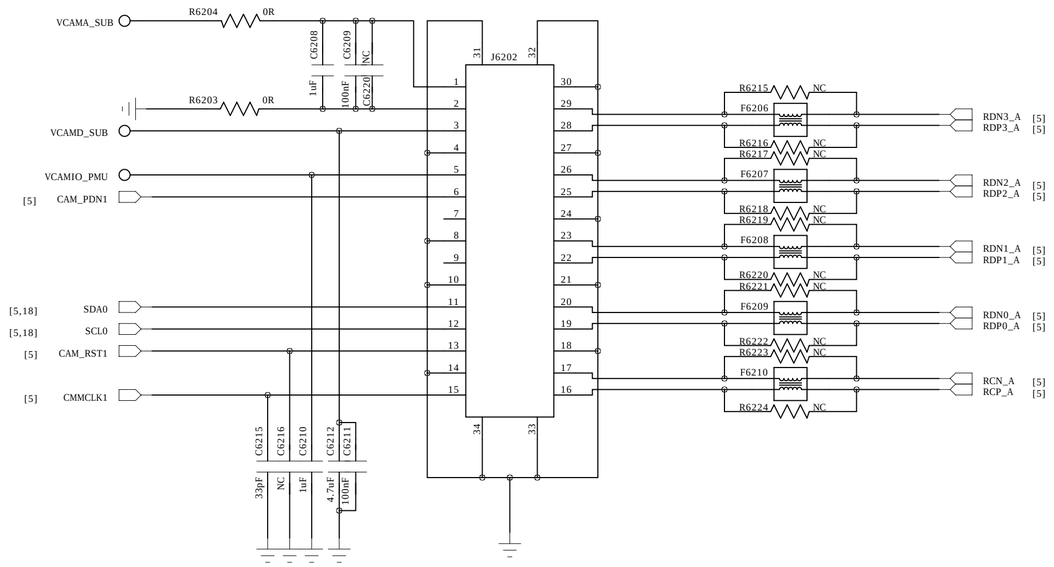

COMPANY: TRANSSION HOLDINGS				MODEL: H5312		Modified Date: 2017/2/6
DRAWN	jun.zhu	DATED	20160906	TITLE: 62_CAMERA		VERSION: V1.0
CHECKED	<CHECKED>	DATED	< >	Confidentiality	CONFIDENTIAL	SHEET: 18 OF 21

REVISION RECORD			
LTR	ECO NO:	APPROVED:	DATE:

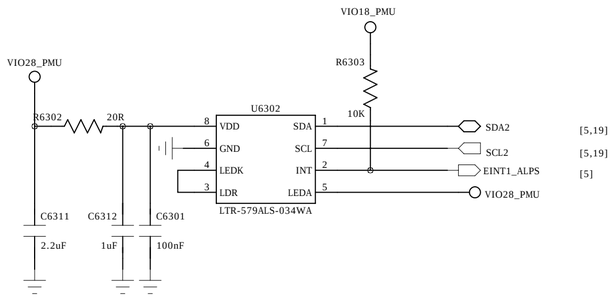

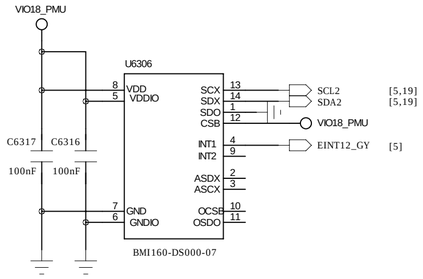

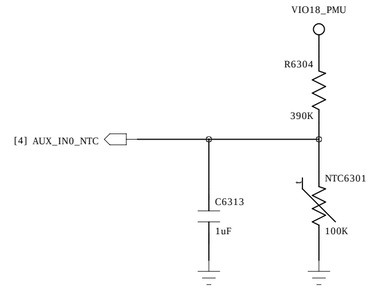

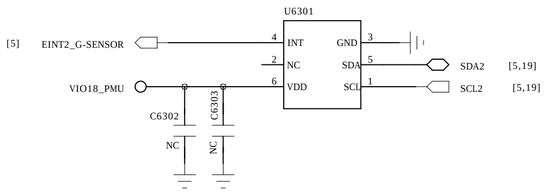

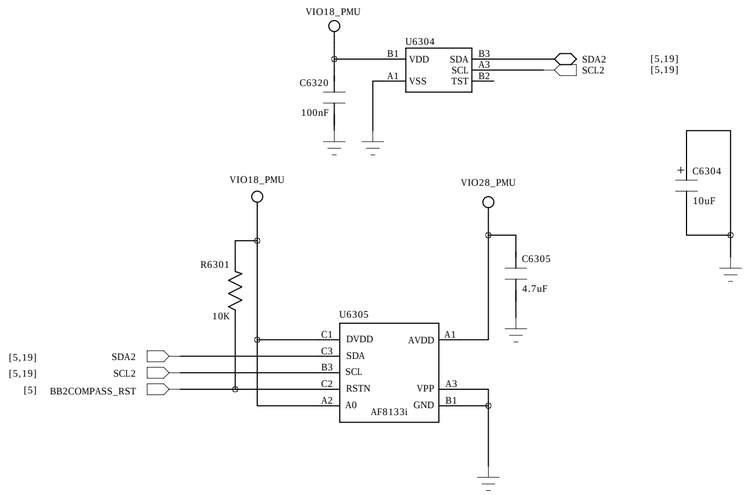

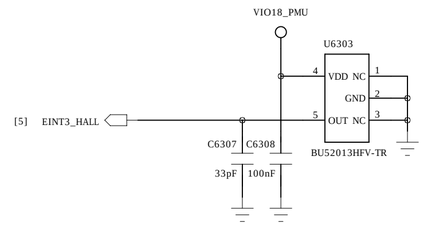

COMPANY: TRANSSION HOLDINGS				MODEL: H5312		Modified Date: 2017/2/6
DRAWN	jun.zhu	DATED	20160906	TITLE: 63_SENSORS		VERSION: V1.0 / SHEET: 19 OF 21
CHECKED	<CHECKED>	DATED	< >	Confidentiality	CONFIDENTIAL	

REVISION RECORD			
LTR	ECO NO:	APPROVED:	DATE:

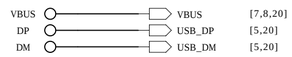

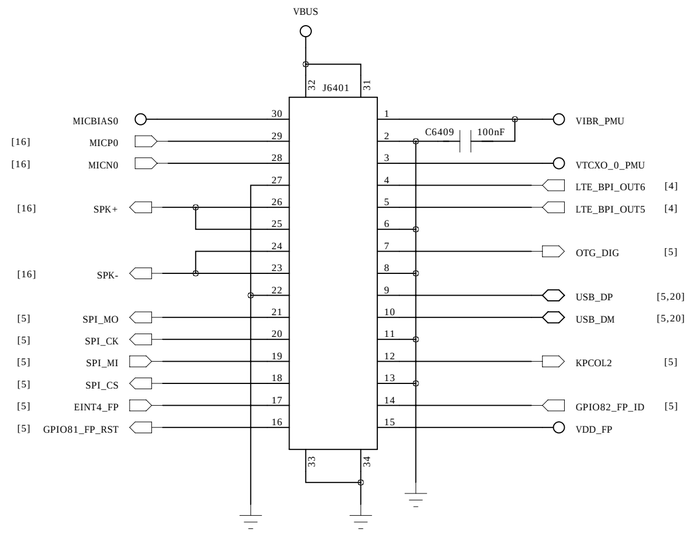

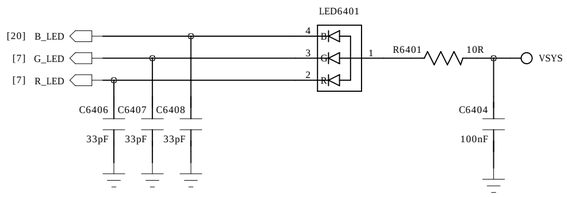

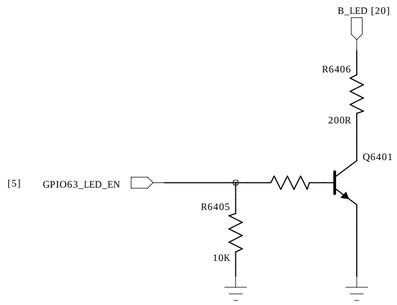

COMPANY: TRANSSION HOLDINGS				MODEL: H5312		Modified Date: 2017/2/6
DRAWN	jun.zhu	DATED	20160906	TITLE: 64_PERI_EXCH_FP		VERSION: V1.0 / SHEET: 20 OF 21
CHECKED	<CHECKED>	DATED	< >	Confidentiality	CONFIDENTIAL	

REVISION RECORD			
LTR	ECO NO:	APPROVED:	DATE:

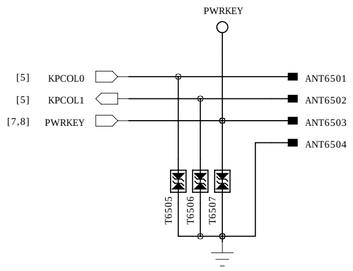

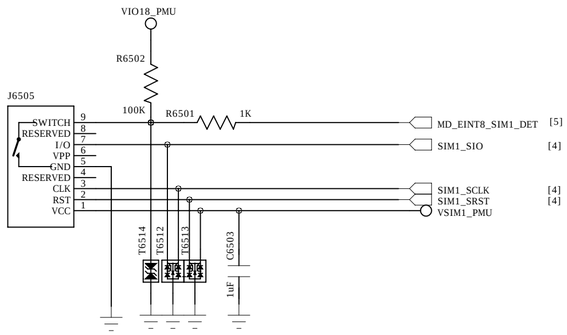

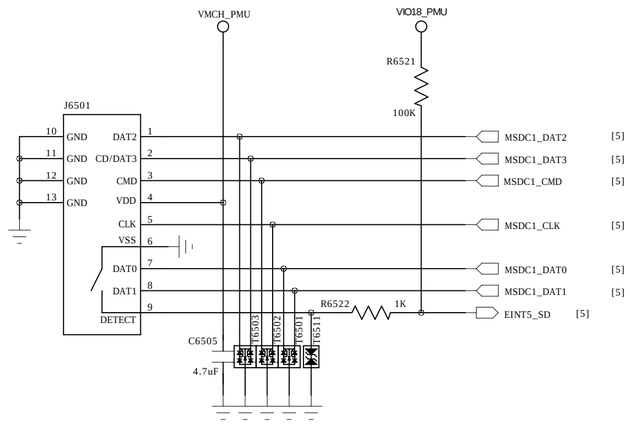

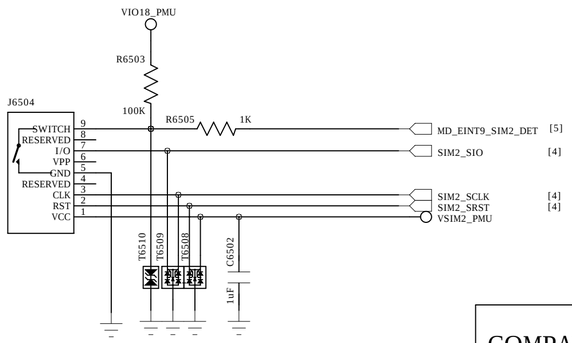

COMPANY: TRANSSION HOLDINGS				MODEL: H5312		Modified Date: 2017/2/6
DRAWN	jun.zhu	DATED	20160906	TITLE: 65_SIM_T/FLASH_KEYPAD		VERSION: V1.0 / SHEET: 21 OF 21
CHECKED	<CHECKED>	DATED	< >	Confidentiality	CONFIDENTIAL	