| Sheet # | Content |
|---|---|
| 1 | Contents Table |
| 5 | MSM8909_CONTROL_1 |
| 6 | MSM8909_CONTROL_2 |
| 7 | MSM8909_GPIO |
| 8 | MSM8909_POWER_1 |
| 9 | MSM8909_POWER_2 |
| 10 | MSM8909_GND |
| 11 | PM8909_CONTROL_1 |
| 12 | PM8909_CONTROL_2 |
| 13 | PM8909_POWER |
| 14 | AUDIO |
| 15 | SENSORS |
| 16 | MEMORY |
| 17 | MULTIMEDIA |
| 18 | INTERFACE |
| 19 | NFC |
| 30 | PRIMARY_ANTENNA_TUNER |
| 31 | MMPA_RF7459A |
| 32 | BAND7_B28_TX |
| 33 | DUPLEXERS |
| 34 | GSM_RX_LB_TX |
| 35 | DRX |
| 36 | WTR4905 |
| 37 | QFE2101 |
| 38 | RF_GPS |
| 39 | WCN3610 |

| Sheet # | Content |
|---|---|

Title

Size | Name | Rev

Date: | Sheet of

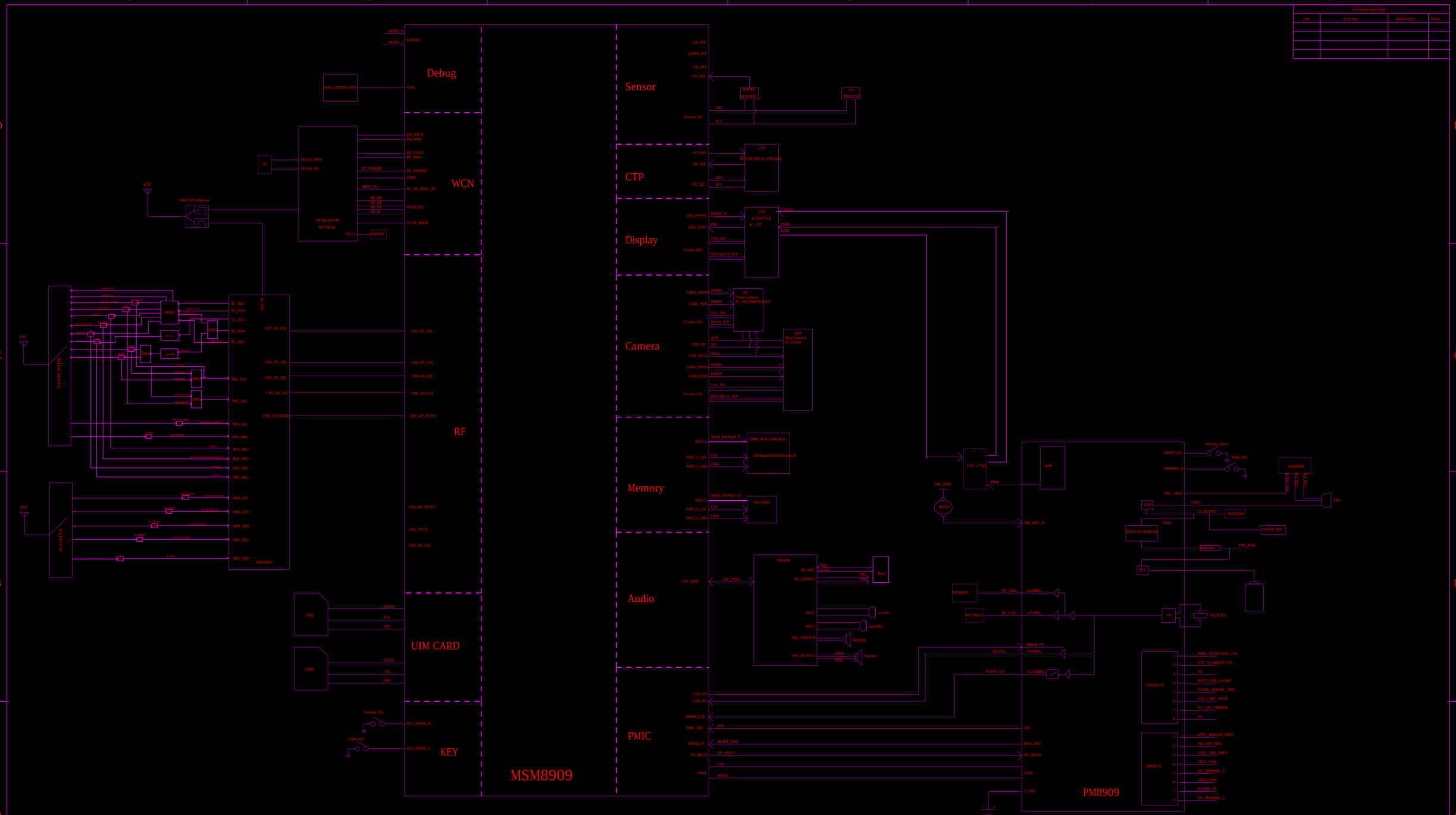


| REVISION RECORD | | | |
|---|---|---|---|
| LTR | ECO NO: | APPROVED: | DATE: |
| | | | |
| | | | |
| | | | |
| | | | |

| | | | |
|---|---|---|---|
| DRAWN: <Drawn By> | DATED: <Drawn Date> | | |
| CHECKED: <Checked By> | DATED: <Checked Date> | | |
| QUALITY CONTROL: <QC By> | DATED: <QC Date> | | |
| RELEASED: <Released By> | DATED: <Release Date> | | |

COMPANY: <Company Name>

TITLE: <Title>

| CODE: | SIZE: | DRAWING NO: | REV: |
|---|---|---|---|
| <Code> | D | <Drawing Number> | <Revision> |

SCALE: <Scale> SHEET: 2 OF 27

# MSM8909_CONTROL_1

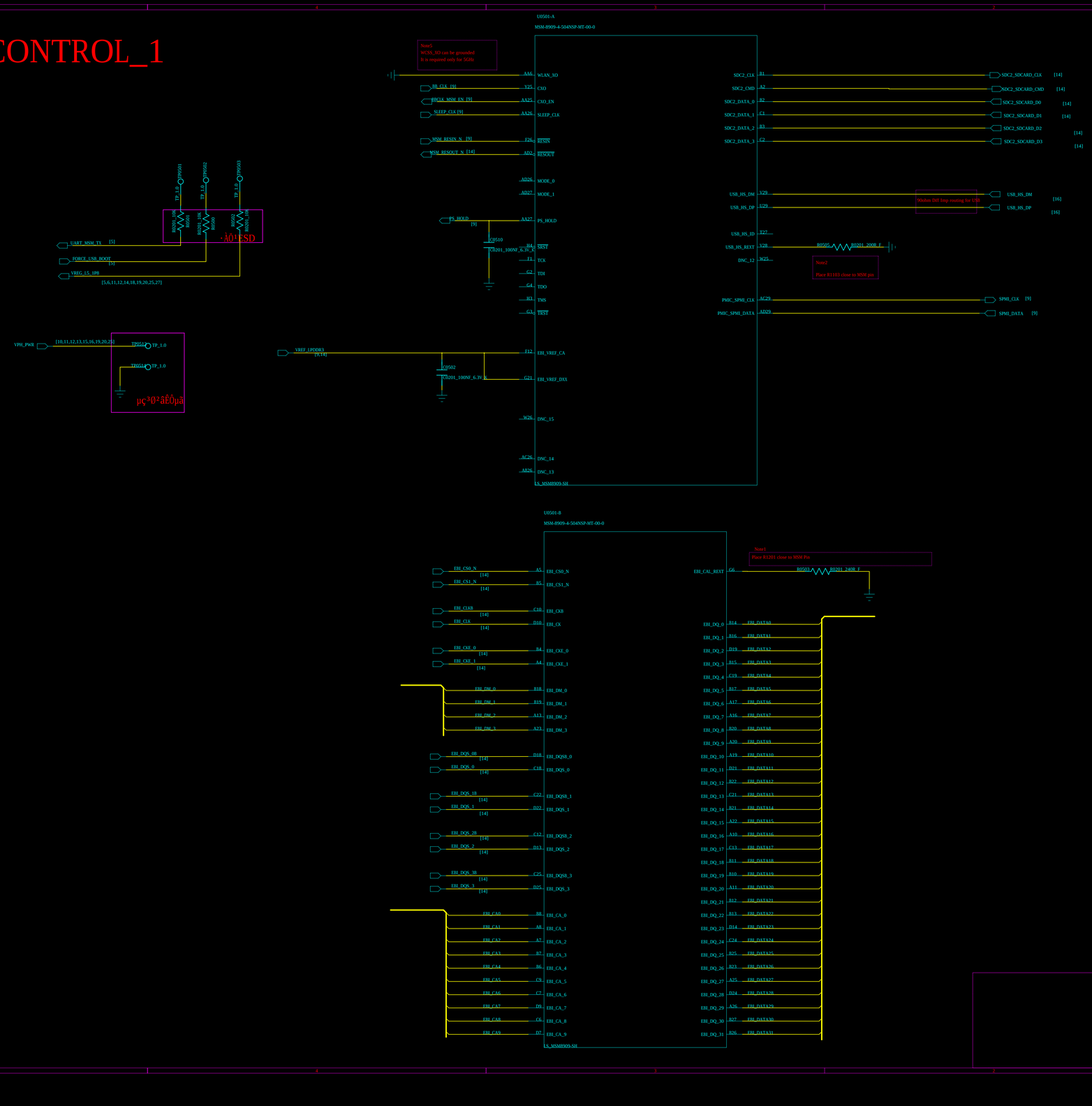


Title

Size | Name | Rev

Date | Sheet | of

# MSM8909_CONTROL_2

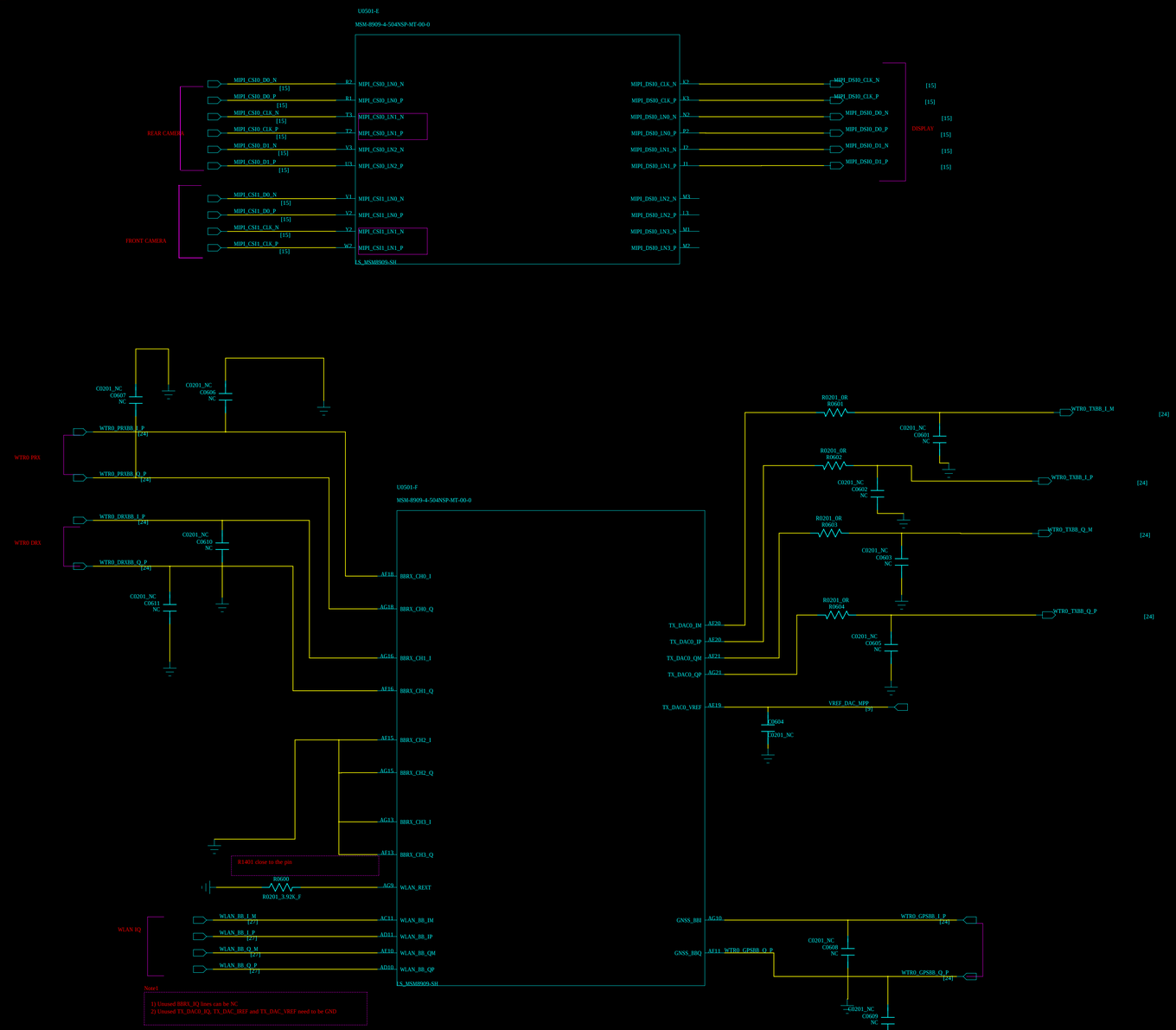


Title

Size | Sheet Number | Rev

Date: | Sheet of

# MSM8909_GPIO

| BOARD_IDÅäöÖÅ±í | | | | | | |
|---|---|---|---|---|---|---|
| | R0720 | R0721 | R0722 | R0723 | GPIO68 | GPIO69 |
| Å·ÖÞµ¥¿¨£¨L01£© | NC | SMT | NC | SMT | 0 | 0 |
| Å·ÐÂµ¥¿¨£¨L02£© | NC | SMT | SMT | NC | 0 | 1 |
| Å¬ÀÀµ¥¿¨£¨L03£© | SMT | NC | NC | SMT | 1 | 0 |
| Å¬ÀÀÉ«¿¨£¨L23£© | SMT | NC | SMT | NC | 1 | 1 |

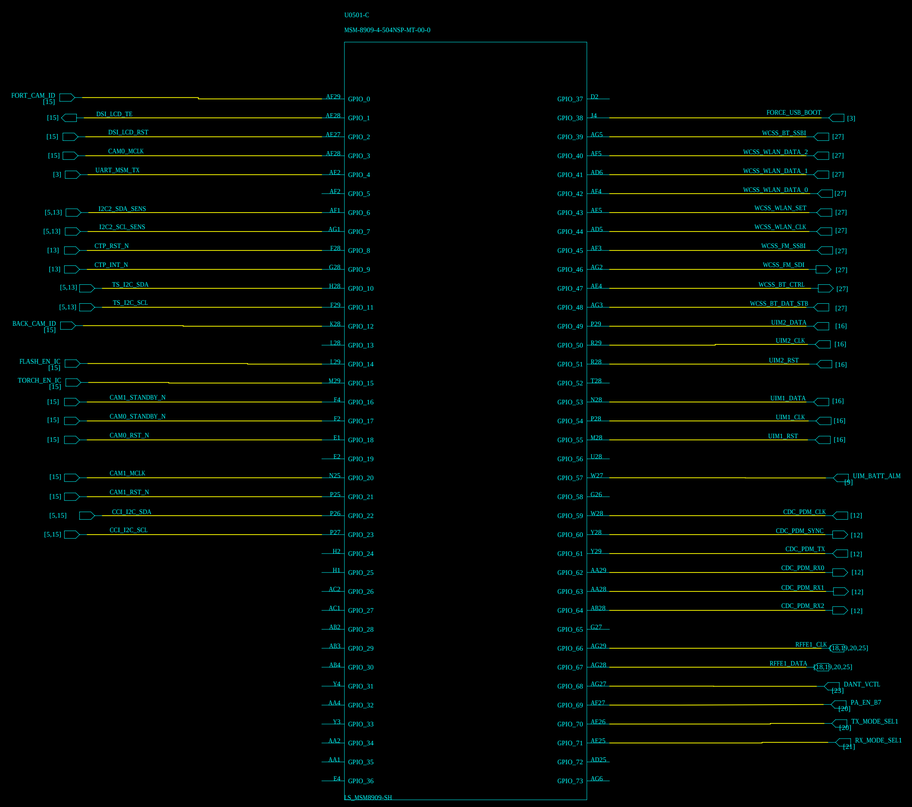


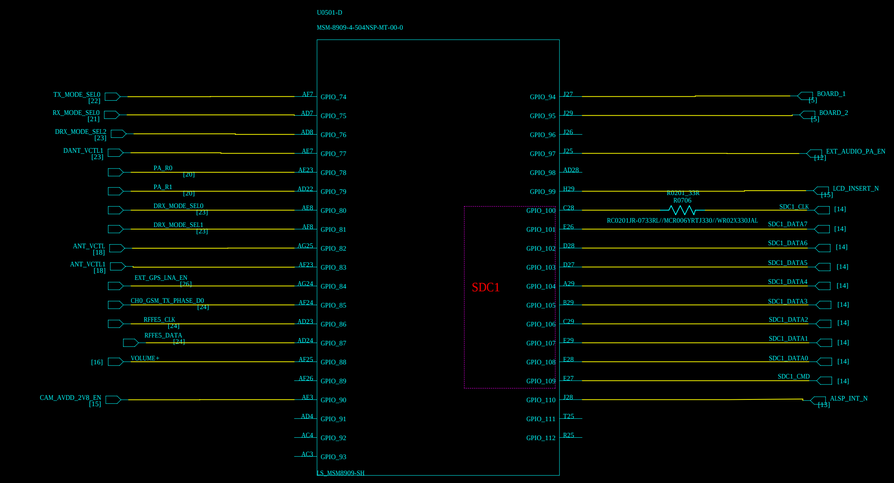


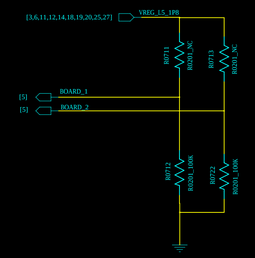


| GPIOs | BOOT_CONFIG |
|---|---|
| GPIO_76 | BOOT_CONFIG[0],WDOG |
| GPIO_77 | BOOT_CONFIG[1] |
| GPIO_78 | BOOT_CONFIG[2] |
| GPIO_79 | BOOT_CONFIG[3] |

| BOOT_CONFIG[3:1] | BOOT_CONFIG |
|---|---|
| 0b000 | Nand -> SD @ SD2 -> USB2.0 |
| 0b001 | SD @ SD2 -> USB2.0 |
| 0b010 | EMMC |
| 0b011 | USB2.0 |

Configuration GPIO Table

| | | | |
|---|---|---|---|
| GPIO_80 | WDOG_DISABLE | BOOT_CONFIG_0 | Default Boot Config (0b010) is eMMC |
| GPIO_81 | BOOT_SEL_1 | BOOT_CONFIG_1 | |
| GPIO_82 | BOOT_SEL_2 | BOOT_CONFIG_2 | |
| GPIO_83 | BOOT_SEL_3 | BOOT_CONFIG_3 | |
| GPIO_84 | | BOOT_CONFIG_4 | |
| GPIO_86 | | BOOT_CONFIG_5 | |
| GPIO_87 | | BOOT_CONFIG_6 | |
| GPIO_88 | | BOOT_CONFIG_7 | |
| GPIO_90 | | BOOT_CONFIG_8 | |
| GPIO_37 | FORCE_USB_BOOT | | |

| BOOT_SEL | BOOT MODE |
|---|---|
| 0b000 (Default) | eMMC->SDC2->USB |
| 0b001 | SDC2->eMMC->USB |
| 0b010 | eMMC->USB |
| 0b011 | USB-HS only |
| | |

## I2C PULL-UP RESISTORS

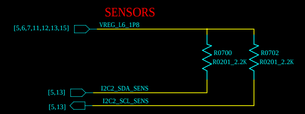


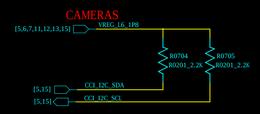


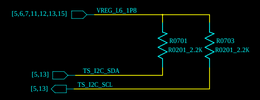


Title

Size | Name | Rev

Date | Sheet | of

# MSM8909_POWER_1

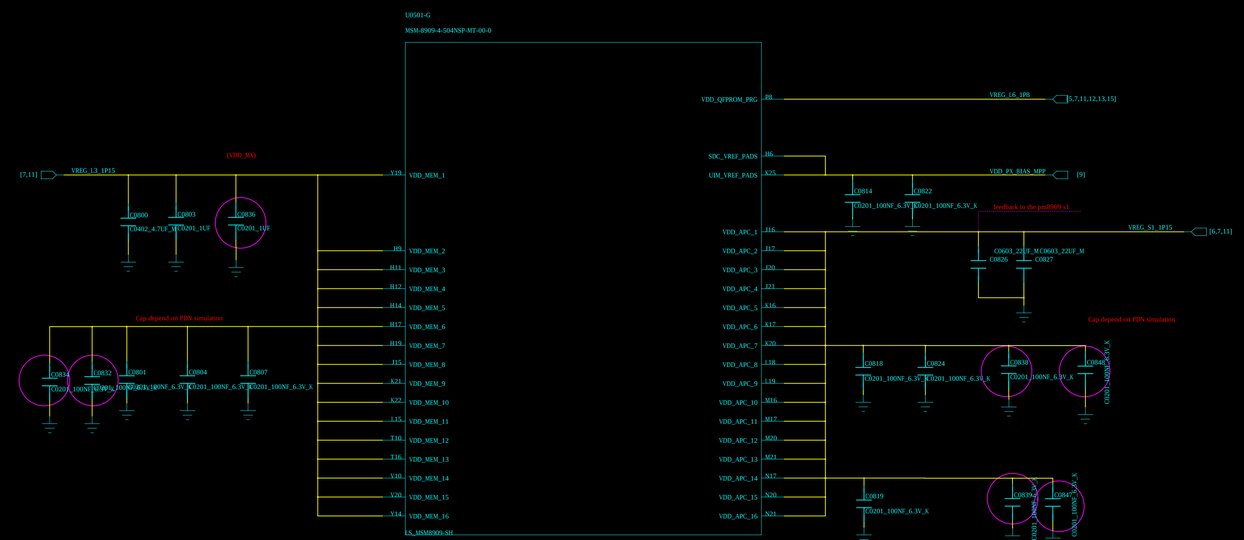


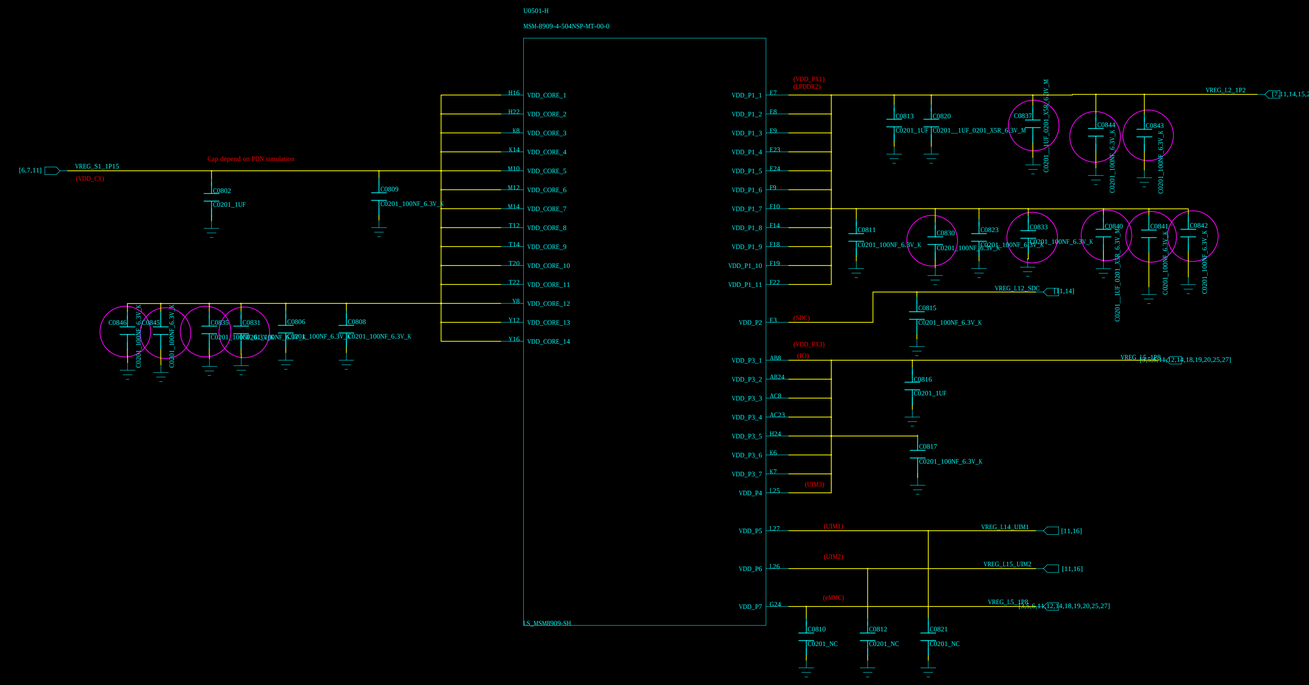


Title

Size | Name | Rev

Date | Sheet | of

# MSM8909_POWER_2

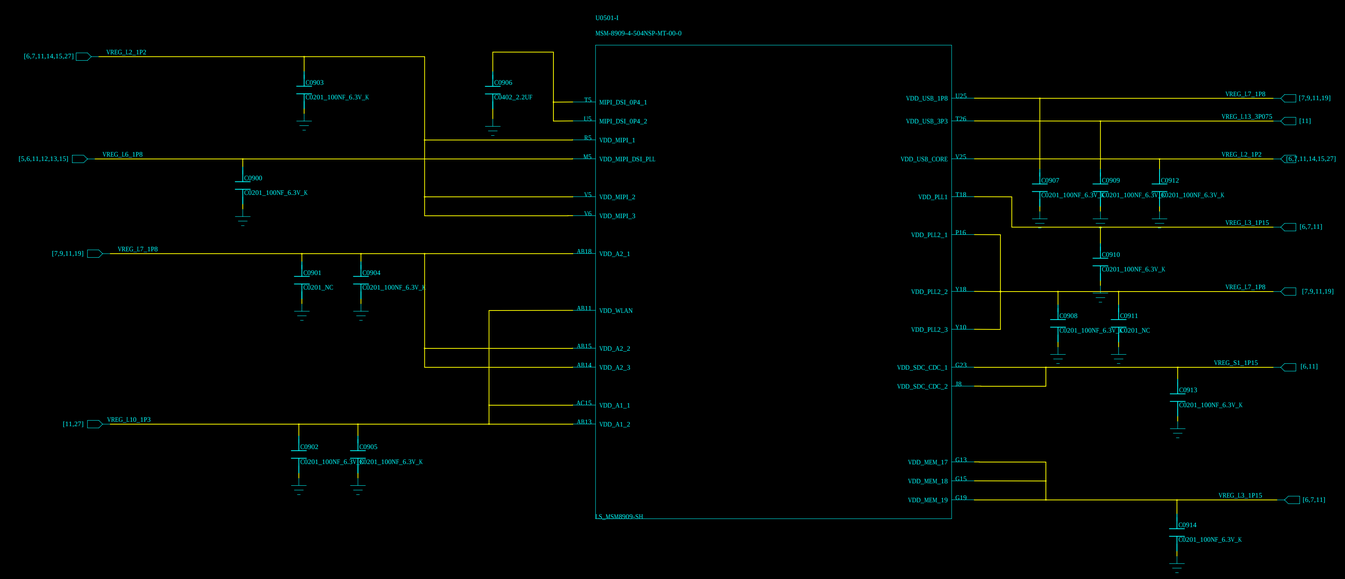


Title

Size | Number | Rev

Date: | Sheet of

# MSM8909_GND

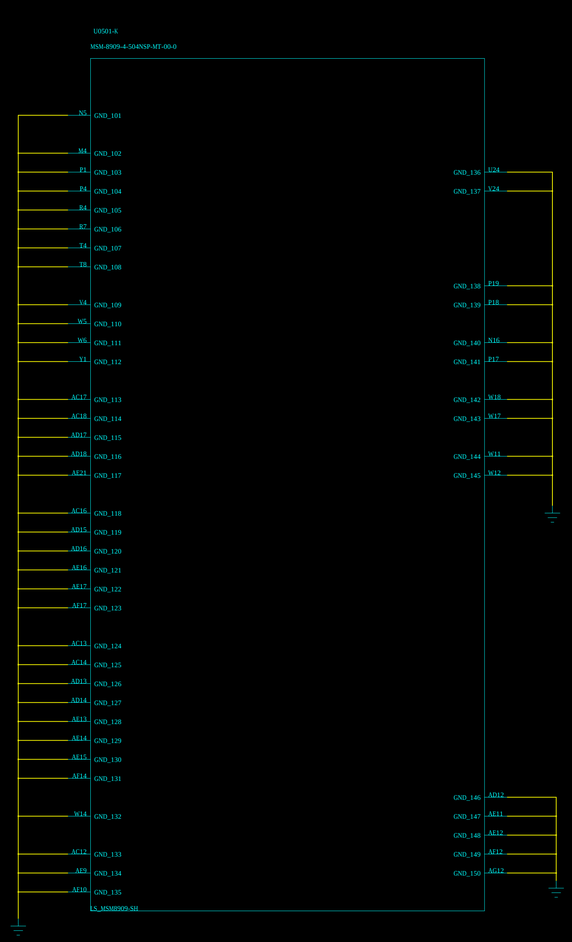


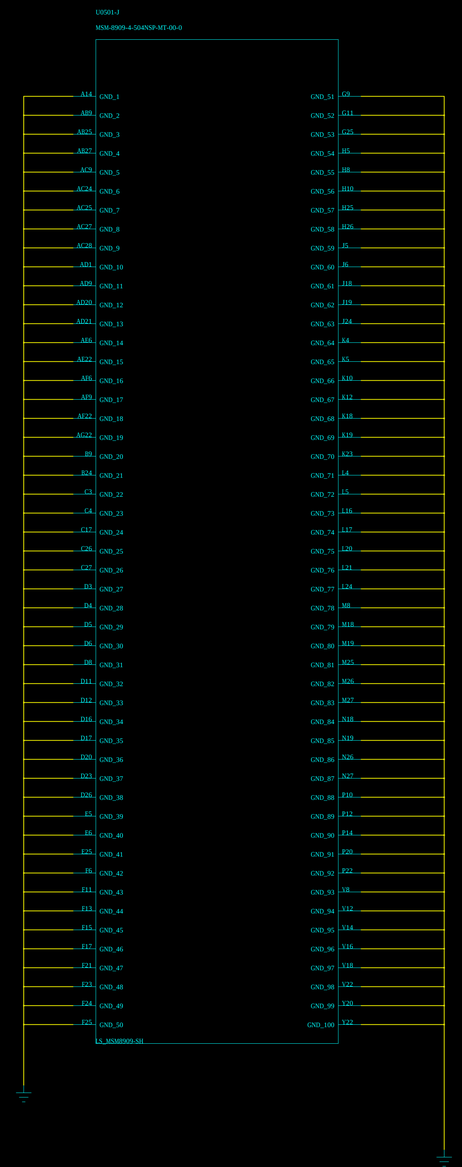


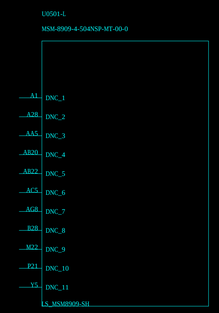


Title

Size | Sheet Name | Rev

Date | Sheet of

# PM8909_CONTROL_1

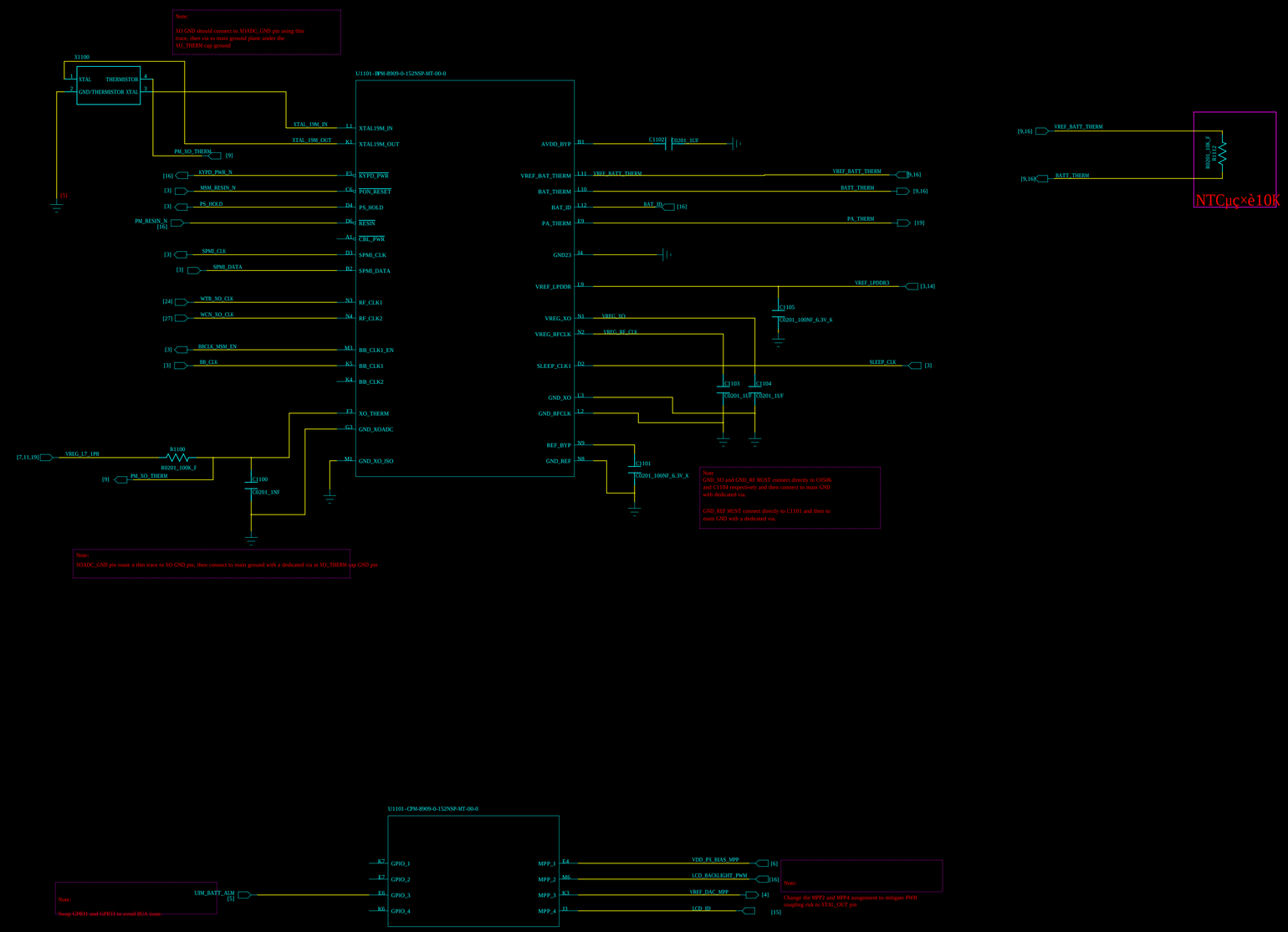

# PM8909_CONTROL_2

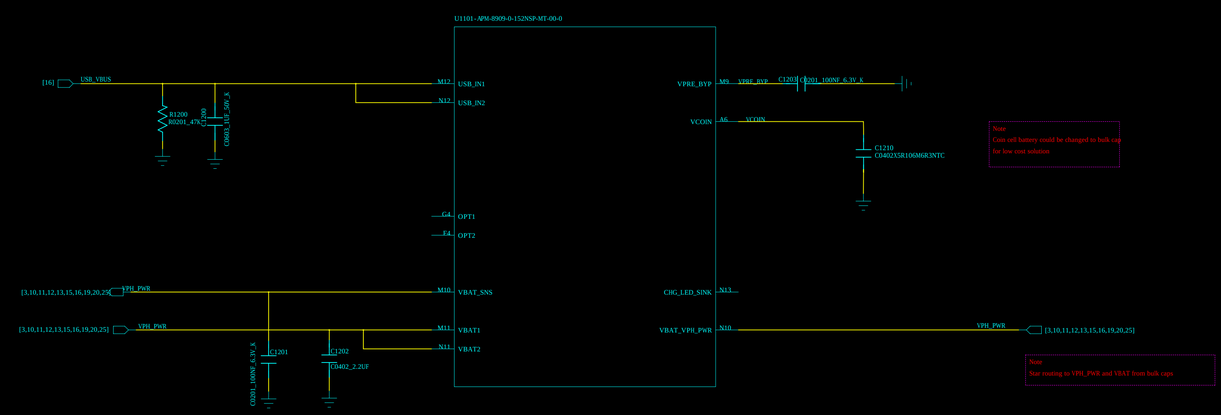


Note
Coin cell battery could be changed to bulk cap for low cost solution.

Note
Star routing to VPH_PWR and VBAT from bulk caps

Title
Size
Sheet Name
Rev
Date
Sheet of

# PM8909_POWER

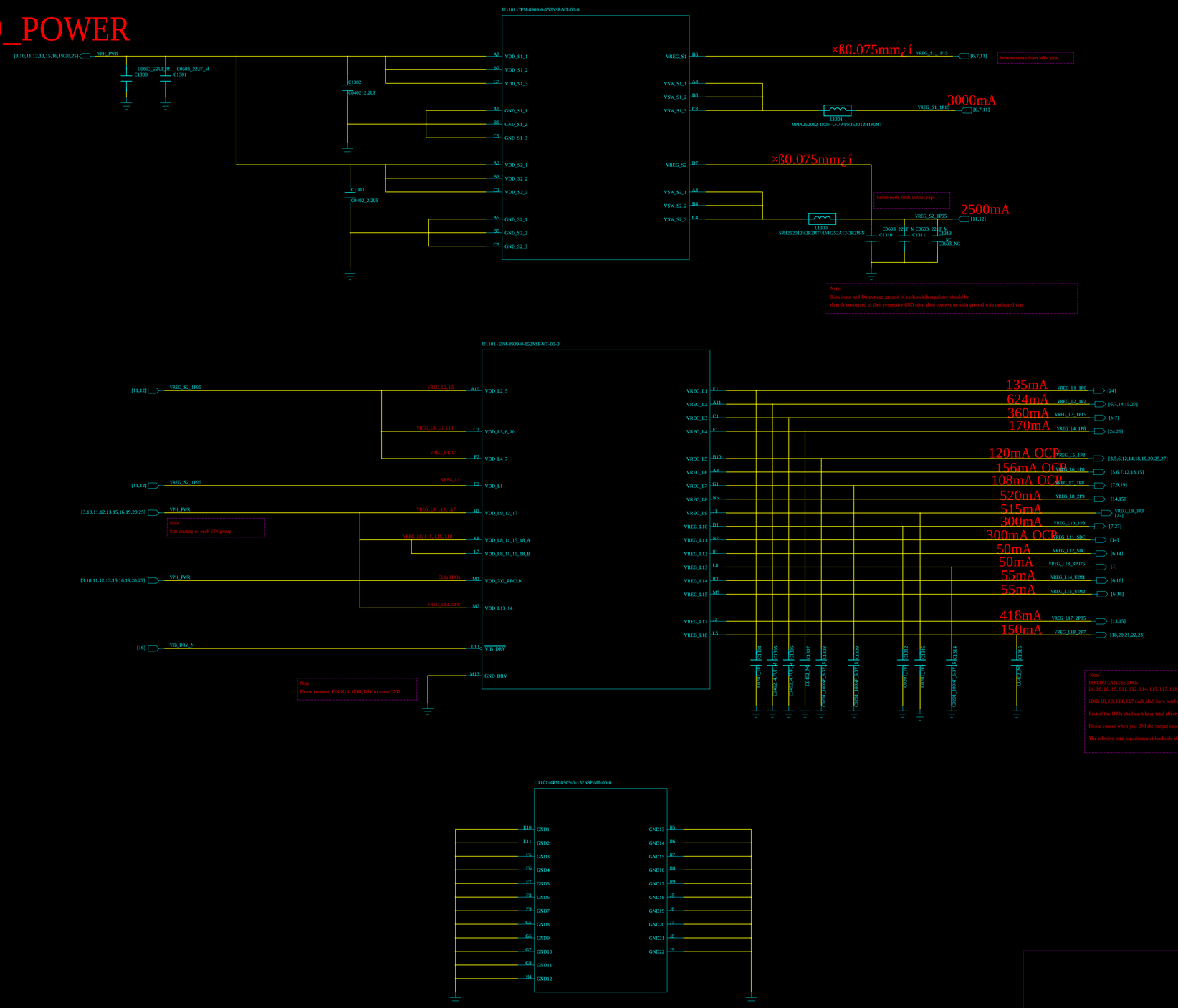


Title

Size | Name | Rev

Date | Sheet | of

# AUDIO

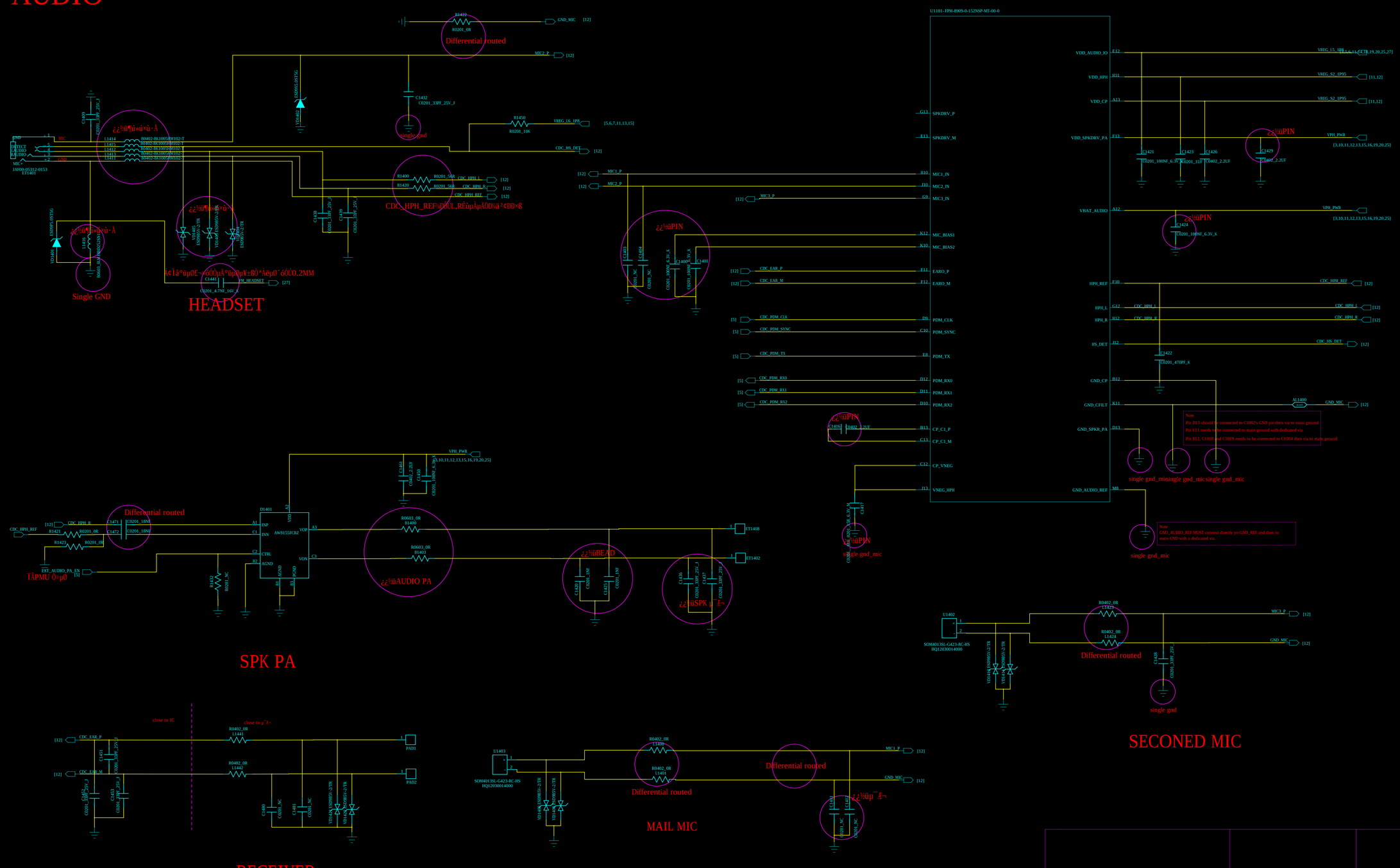
U1101-VPM-8909-0-152NSP-MT-00-0
SPKDRV_P
SPKDRV_M
MIC1_IN
MIC2_IN
MIC3_IN
MIC_BIAS1
MIC_BIAS2
EARO_P
EARO_M
PDM_CLK
PDM_SYNC
PDM_TX
PDM_RX0
PDM_RX1
PDM_RX2
CP_C1_P
CP_C1_M
CP_VNEG
VNEG_HPH
VDD_AUDIO_IO
VDD_HPH
VDD_CP
VDD_SPKDRV_PA
VBAT_AUDIO
HPH_REF
HPH_L
HPH_R
HS_DET
GND_CP
GND_CFILT
GND_SPKR_PA
GND_AUDIO_REF
Differential routed
Single GND
HEADSET
SPK PA
RECEIVER
MAIL MIC
SECONED MIC
single gnd_mic
single gnd
Note
Pin D13 should be connected to C1002's GND pin then via to main ground
Pin K11 needs to be connected to main ground with dedicated via
Pin B12, C1018 and C1019 needs to be connected to C1004 then via to main ground
Note
GND_AUDIO_REF MUST connect directly yo GND_REF and then to main GND with a dedicated via.
Title
Sheet
Size
Name
Rev
Date:
Sheet
of

# SENSORS

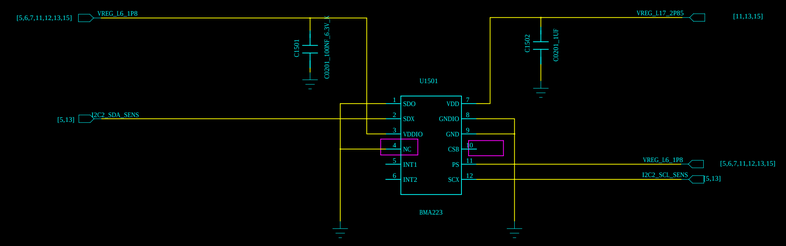


## G-sensor

# TP

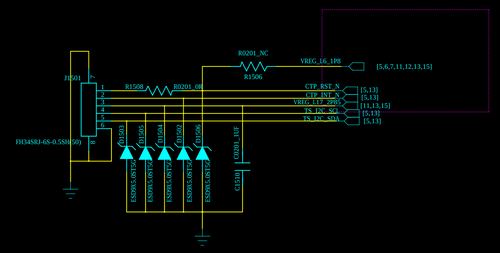


Delete 2.8/1.8 transition IO

For MSG2033 or Cypress

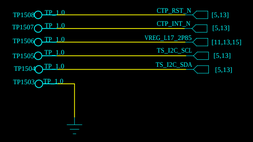


# ALS+PS

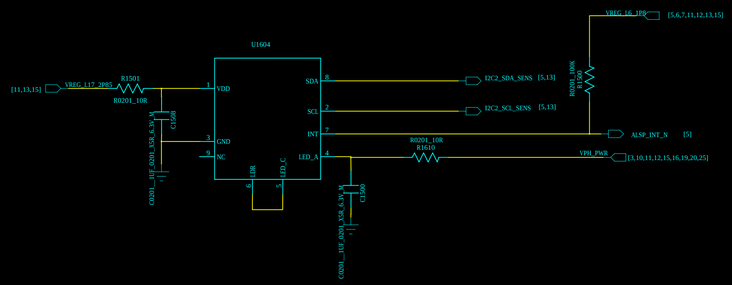


Title

Size | Name | Rev

Date: | Sheet of

# MEMORY

## DDR3 check pass

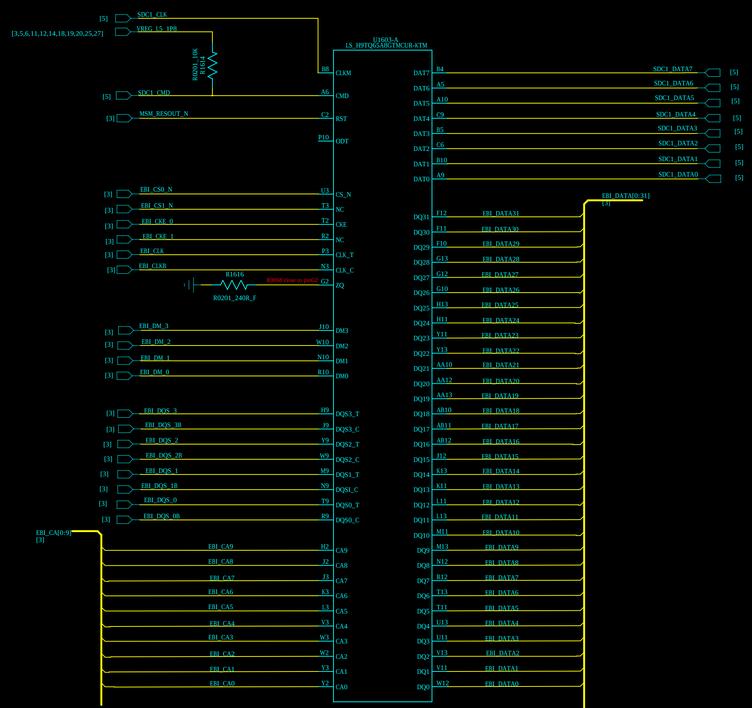


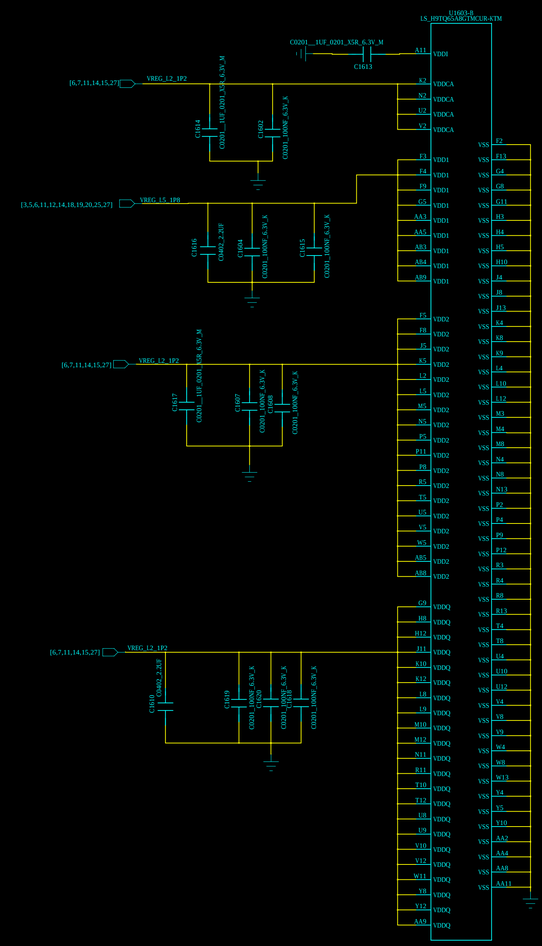


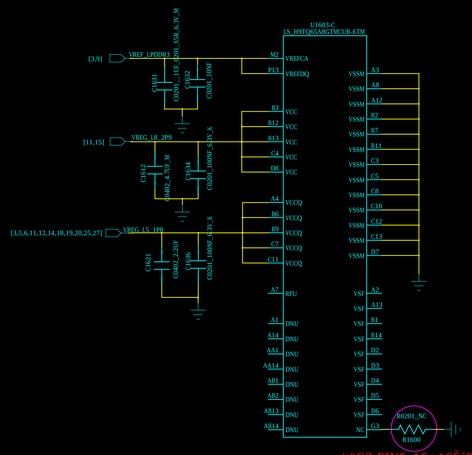


¿¿½üG3 PIN£¬16+16ÈýÐÇMCPÞèÒªSMT 240OHM

# SD

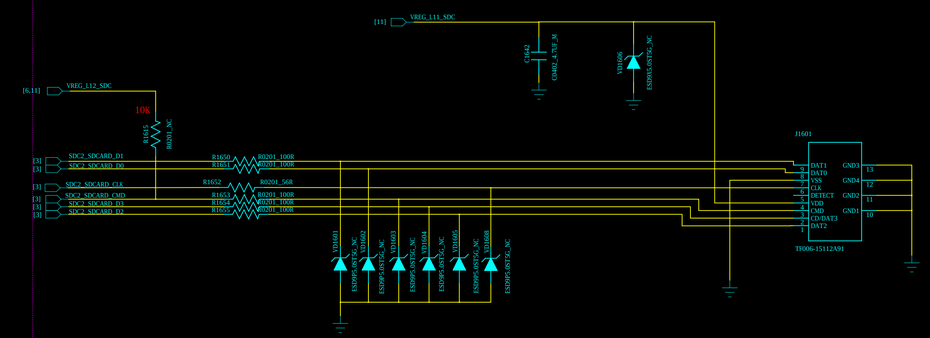


Title

Size | Number | Rev

Date: | Sheet | of

# MULTIMEDIA

I2C ADD:0X20(W),0X21(R)

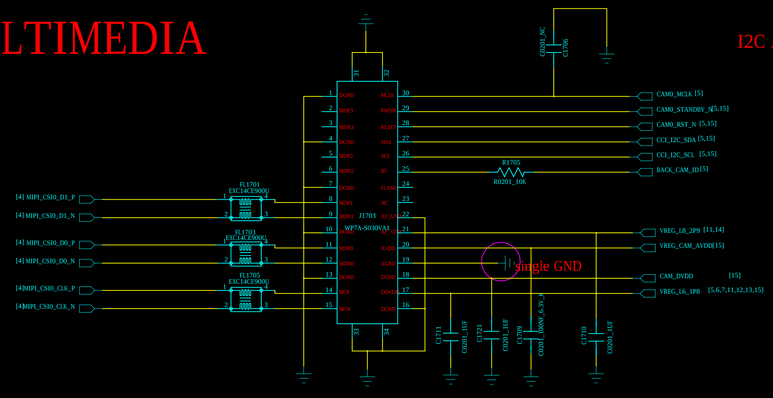


MAIN CAM

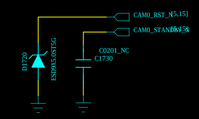


# ÉÁ¹âµÆº ÍÊÖµçÍ²ICµçÂ·

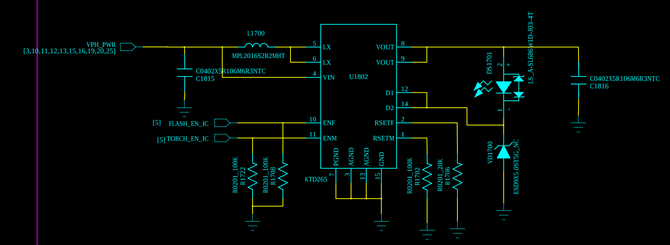


# FRONT CAMERA

I2C ADD:0X6C

2M

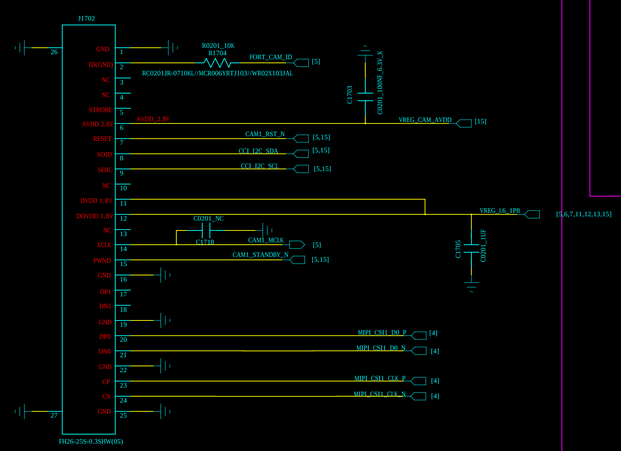


# CAMERA AVDD 2.8V LDO

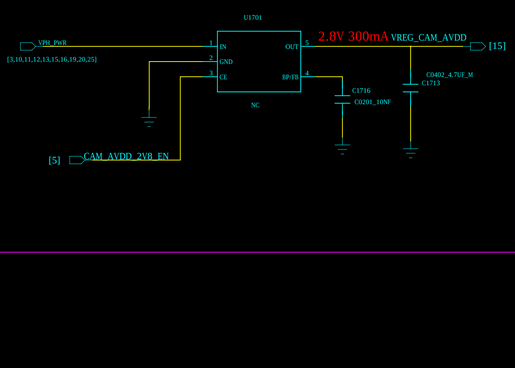


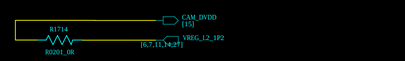


# LCD

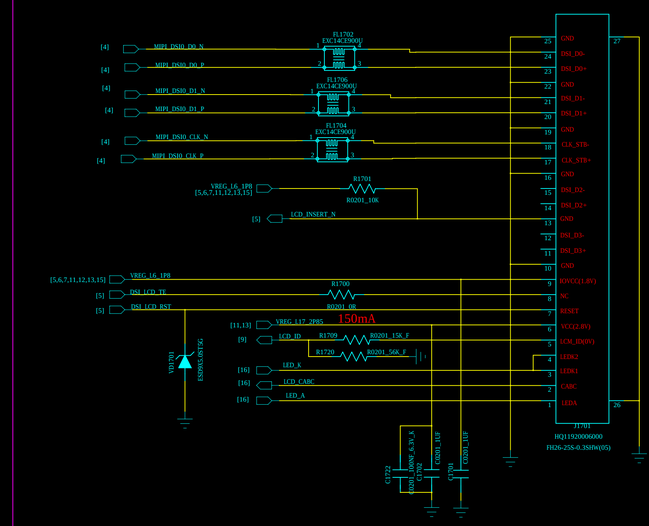


# SHIELDING

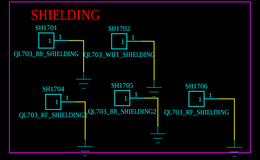


# Mark point

| F1701 | F1702 | F1703 | F1704 |
|---|---|---|---|
| FIDUCIAL_WITHPASTE | FIDUCIAL_WITHPASTE | FIDUCIAL_WITHPASTE | FIDUCIAL_WITHPASTE |

Title

Size | Sheet | Rev

Date | Sheet of

# INTERFACE

## LCD BACKLIGHT_DRIVER

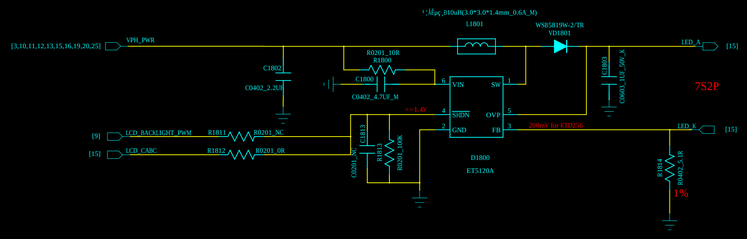


## SIM1

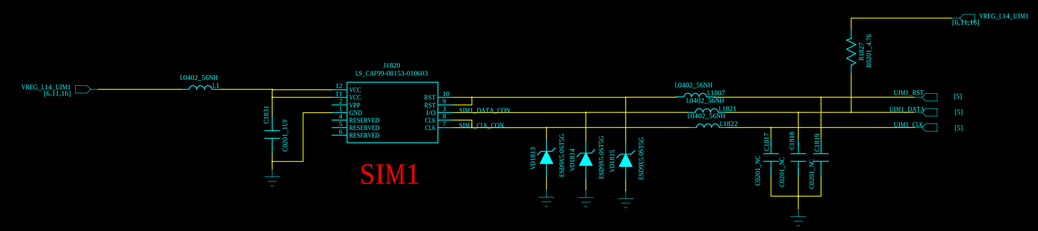


## SIM2

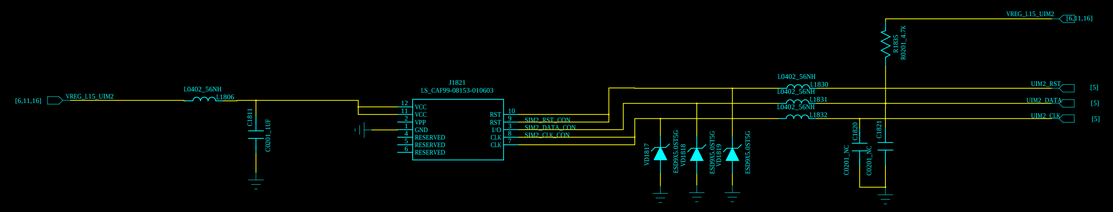


## SIDE KEYS

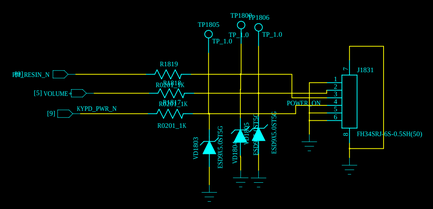


## BAT CON

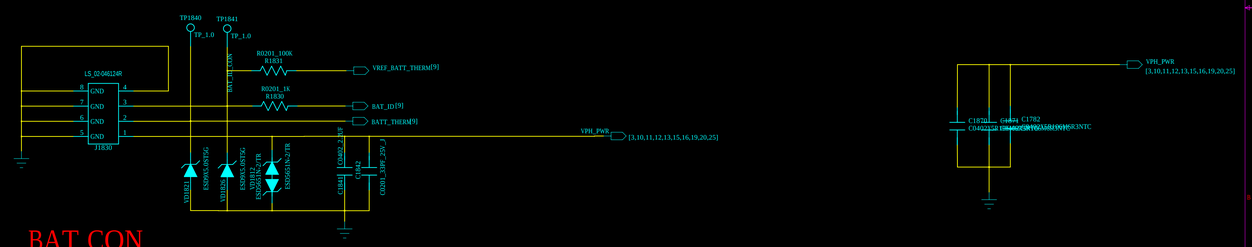


## USB

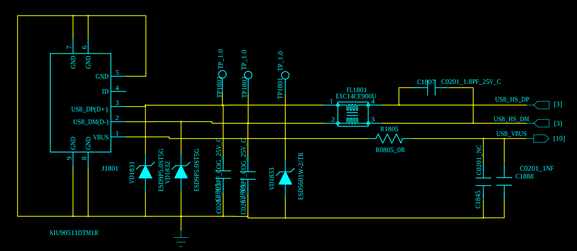


## MOTOR

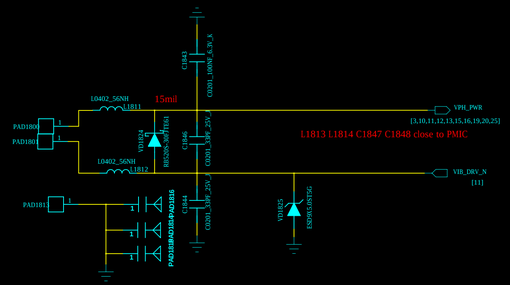


Title

Size | Number | Rev

Date | Sheet of

Title

Size | Sheet Name | Rev

Date: | Sheet of

# PRIMARY_ANTENNA_SWITCH

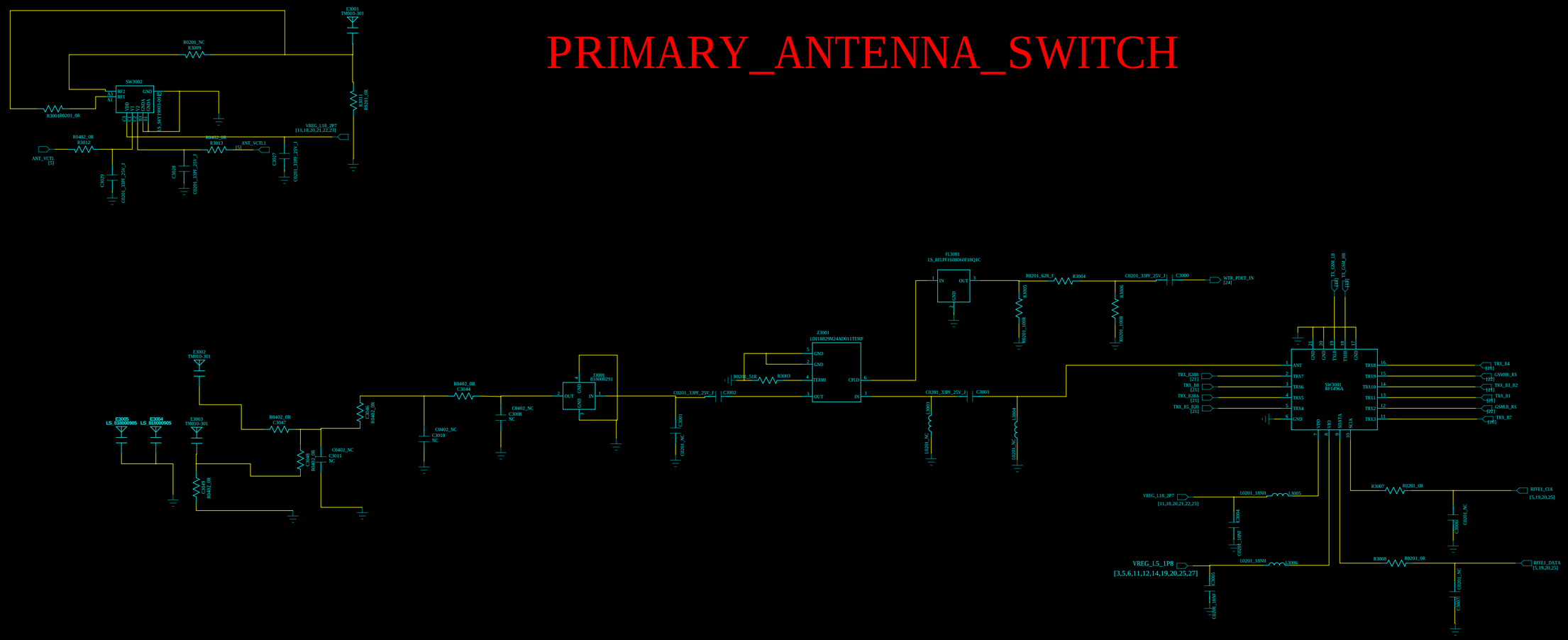


NOT TO BE USED, COPIED, REPRODUCED IN WHOLE OR IN PART, NOR ITS CONTENTS REVEALED IN ANY MANNER TO OTHERS WITHOUT THE EXPRESS WRITTEN PERMISSION OF QUALCOMM.

Title

Size | Sheet Name | Rev

Date: | Sheet of

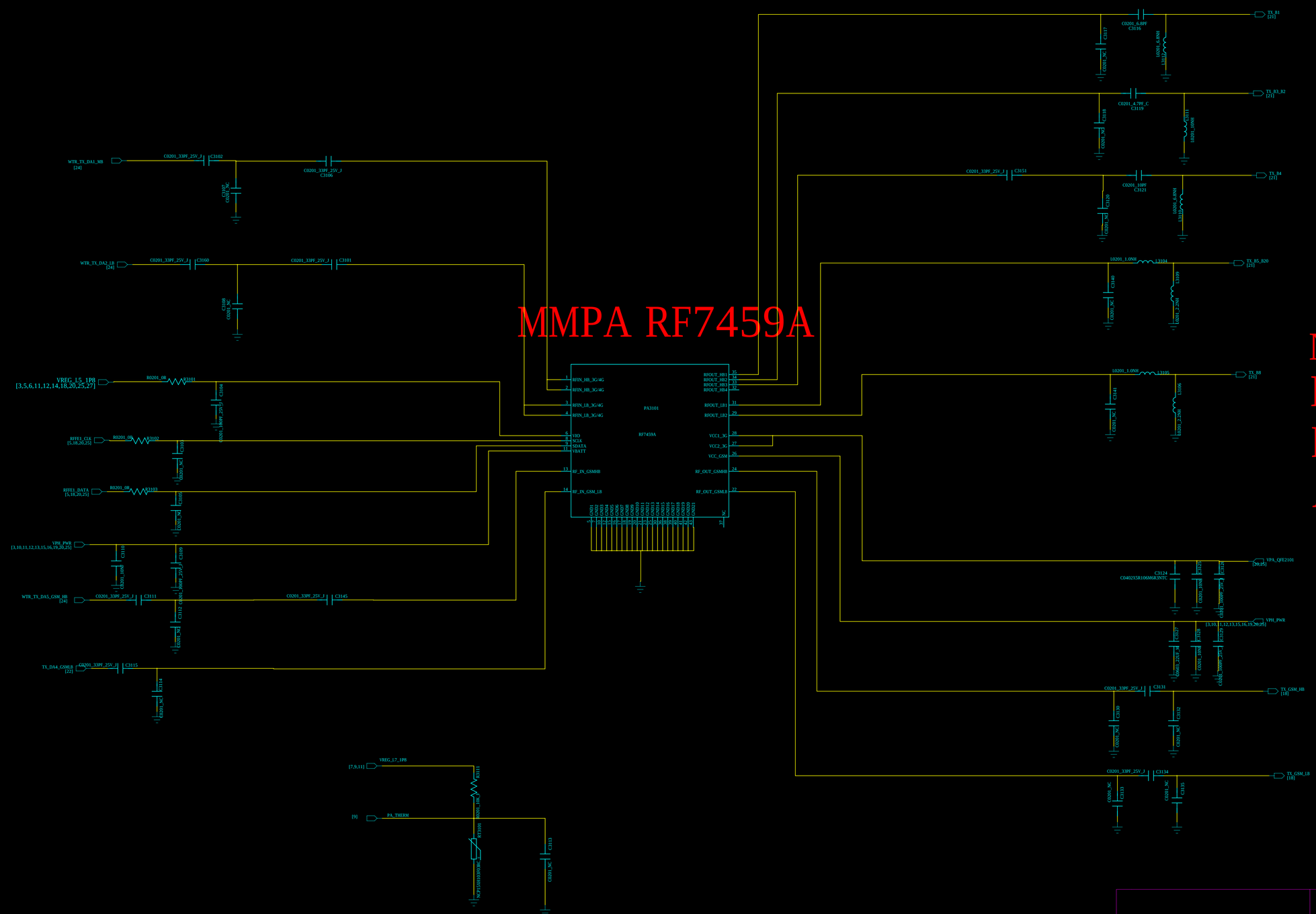


NOTE:
Euro:B1/3/8/20
Lati:B1/2/4/5
Aust:B1/3/5/8

Title
Size | Name | Rev
Date: | Sheet | of

# LTE_B7_B28

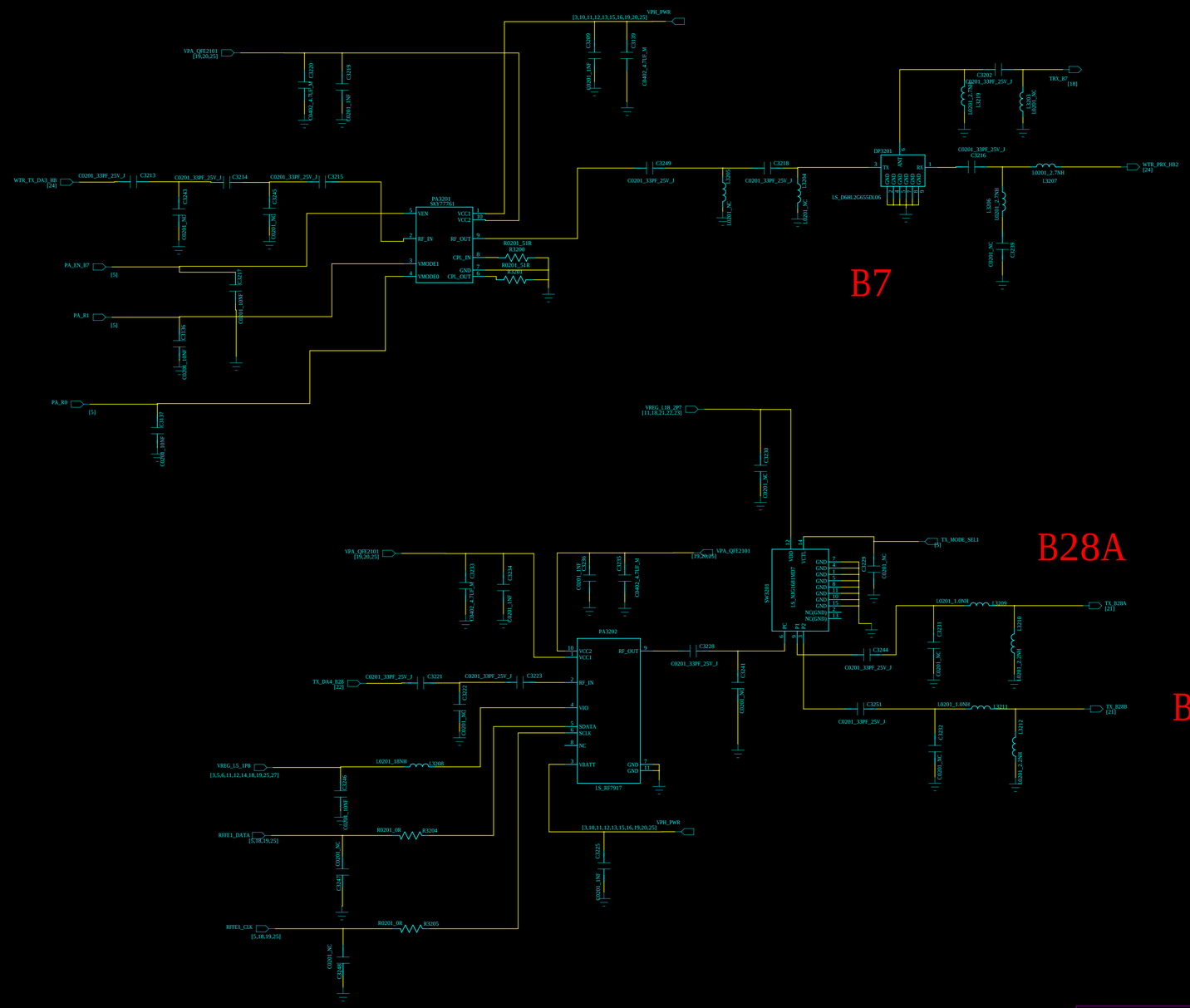


NOTE:

Euro: No B28 Band

Lati:support B28

Aust:support B28

NOT TO BE USED, COPIED, REPRODUCED IN WHOLE OR IN PART, NOR ITS CONTENTS REVEALED IN ANY MANNER TO OTHERS WITHOUT THE EXPRESS WRITTEN PERMISSION OF QUALCOMM.

Title

Size | Name | Rev

Date: | Sheet | of

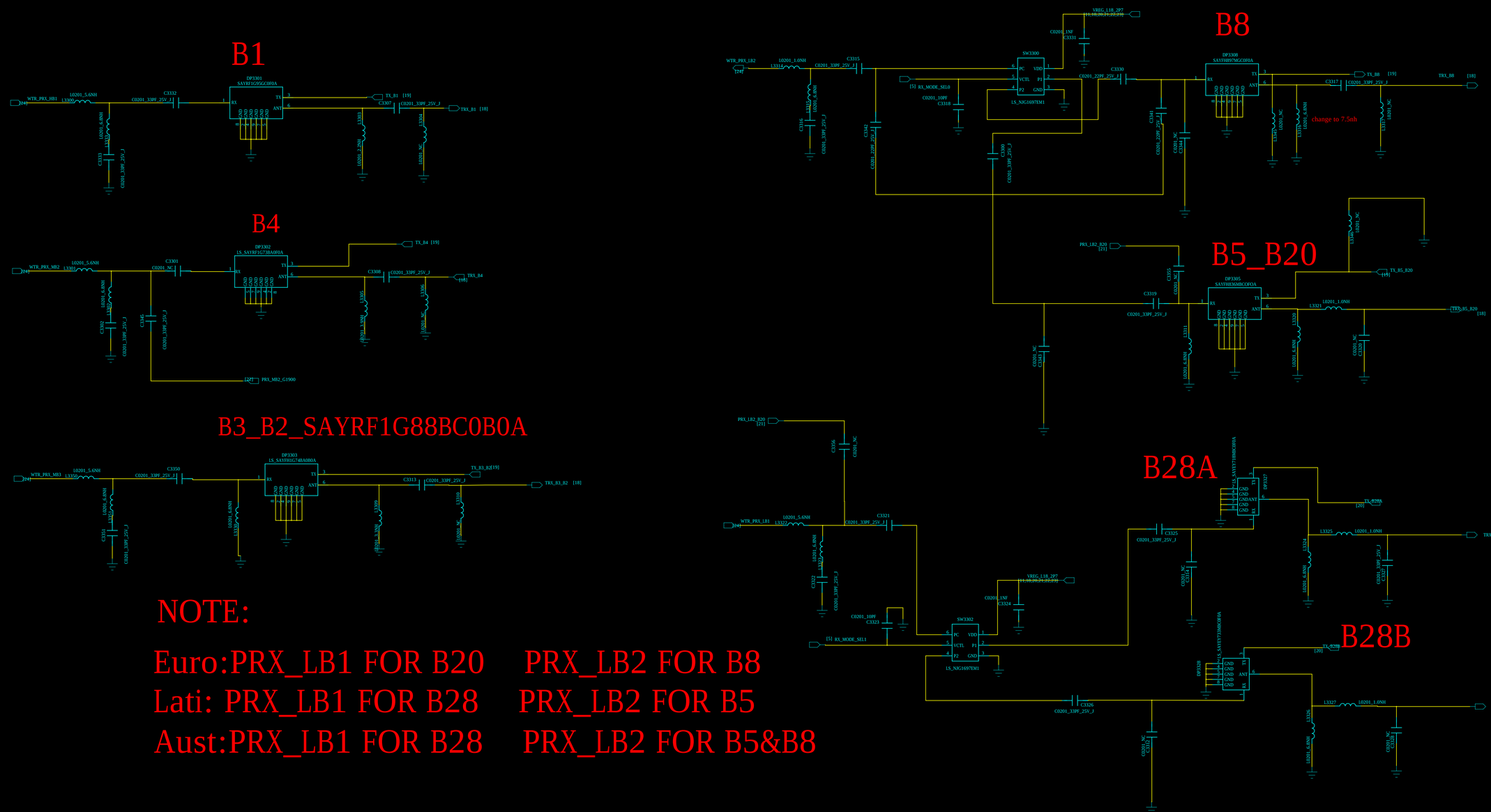
B1
B4
B3_B2_SAYRF1G88BC0B0A
B8
change to 7.5nh
B5_B20
B28A
B28B
SW3300
SW3302
DP3308
DP3305
DP3303
DP3301
DP3302
DP3327
DP3328
LS_NJG1697EM1
VREG_L18_2P7
WTR_PRX_HB1
WTR_PRX_MB2
WTR_PRX_MB3
WTR_PRX_LB2
WTR_PRX_LB1
PRX_MB2_G1900
PRX_LB2_B20
TX_B1
TRX_B1
TX_B4
TRX_B4
TX_B8
TRX_B8
TX_B5_B20
TRX_B5_B20
TX_B28A
TRX_B28A
TX_B28B
TRX_B28B
TX_B3_B2
TRX_B3_B2
RX_MODE_SEL0
RX_MODE_SEL1
change to 7.5nh
NOTE:
Euro:PRX_LB1 FOR B20 PRX_LB2 FOR B8
Lati: PRX_LB1 FOR B28 PRX_LB2 FOR B5
Aust:PRX_LB1 FOR B28 PRX_LB2 FOR B5&B8
Title
Size
Name
Rev
Date
Sheet
of

# GSM LB RX

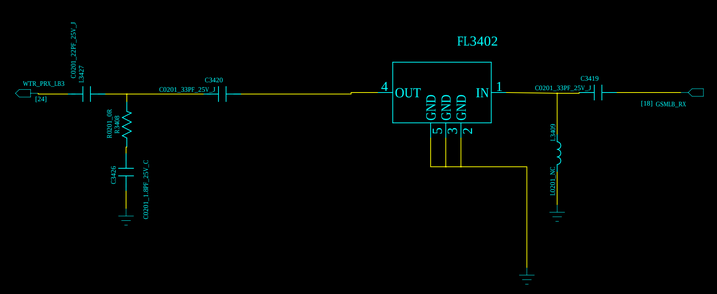


# GSM HB RX

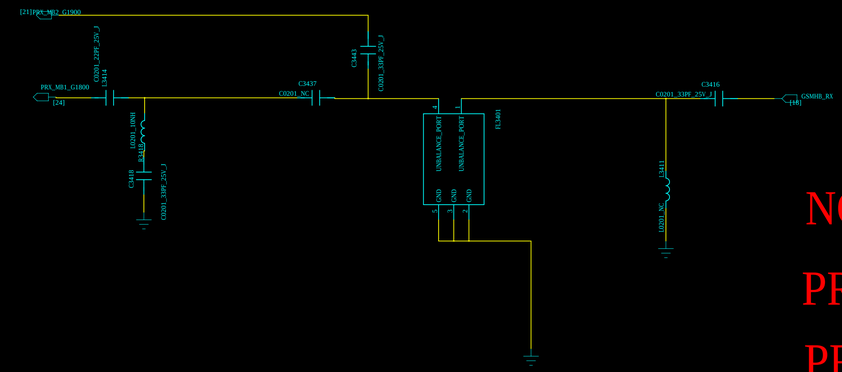


NOTE:

PRX_MB2 FOR GSM1900

PRX_MB1 FOR GSM1800

# GSMLB_B28_TX_SWITCH

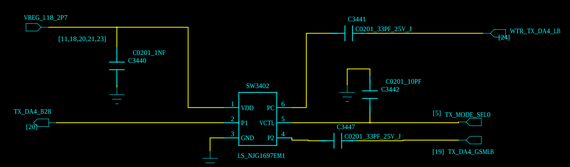


Title

Size | Sheet Name | Rev

Date | Sheet of

# DIV ANT TUNER

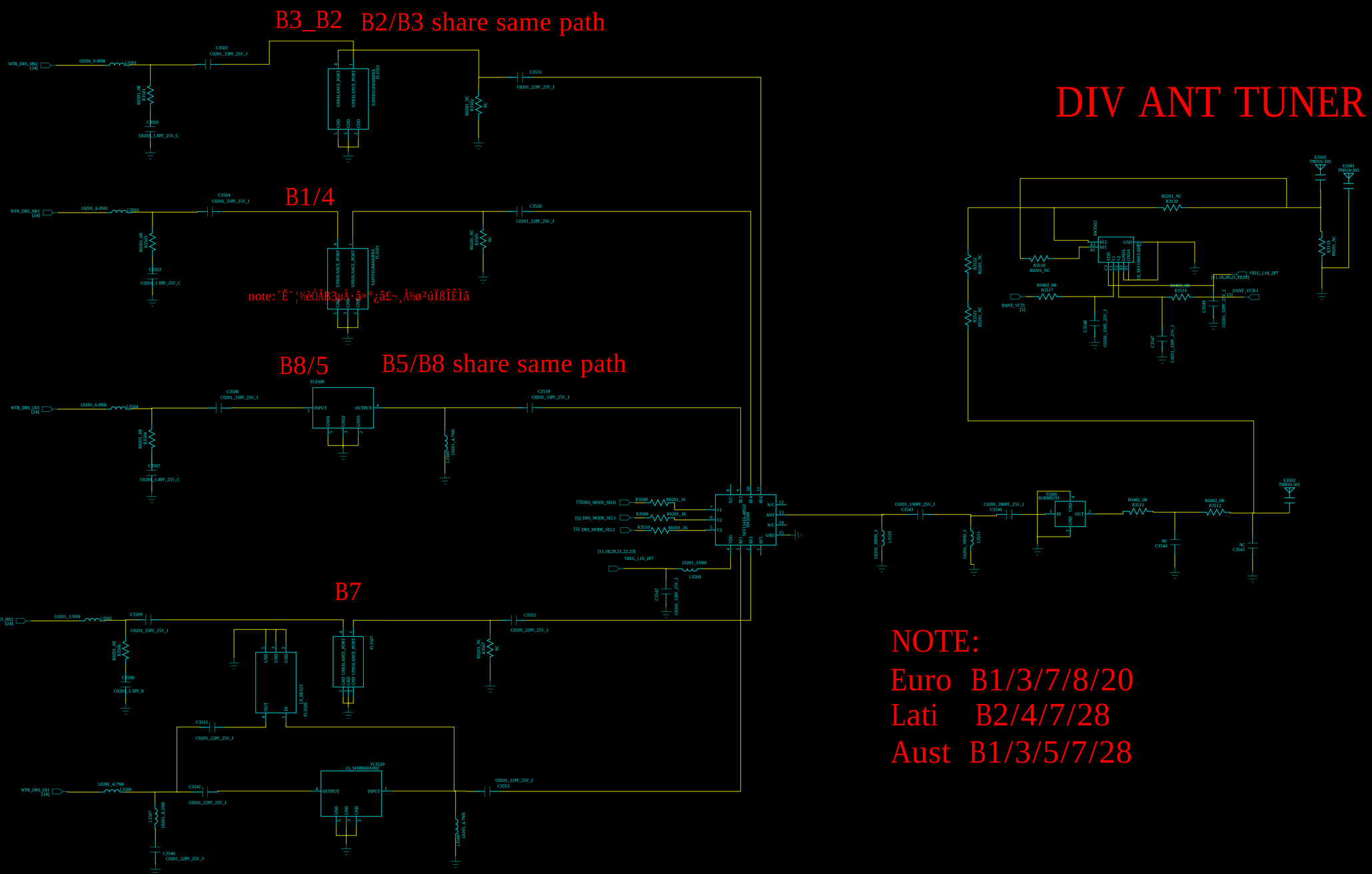


NOTE:

Euro B1/3/7/8/20

Lati B2/4/7/28

Aust B1/3/5/7/28

Title

Size | Name | Rev

Date | Sheet | of

Title

Size | Name | Rev

Date | Sheet | of

# QFE2101

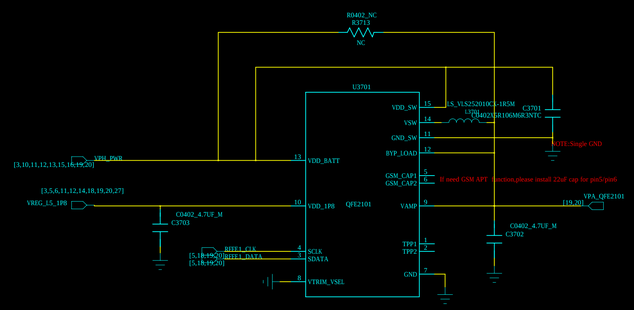


Title

Size | Name | Rev

Date: | Sheet | of

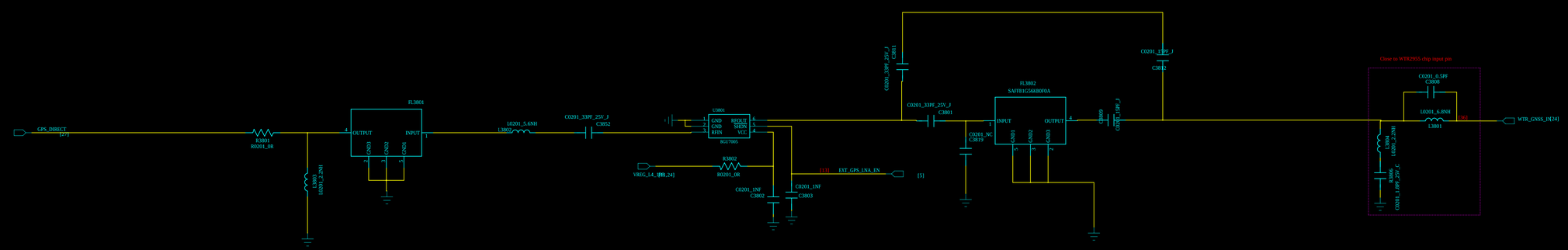


Title

Size | Name | Rev

Date | Sheet | of

NOT TO BE USED, COPIED, REPRODUCED IN WHOLE OR IN PART, NOR ITS CONTENTS REVEALED IN ANY MANNER TO OTHERS WITHOUT THE EXPRESS WRITTEN PERMISSION OF QUALCOMM.

QUALCOMM Incorporated
5775 Morehouse Drive
San Diego, CA 92121-1714
U.S.A.

Title

Size | Name | Rev

Date: | Sheet of