SM-G955F_REV0.5_A_F

2017.02.02

sheet01 : RF (1/2)

sheet02 : RF (2/2)

sheet03 : CP, TRANSCEIVER, MEMORY

sheet04 : SENSORS, HUB, BT/WIFI, NFC, GPS, FM, BTP

sheet05 : EXYNOS8895, SIM SOCKET

sheet06 : EXYNOS8895

sheet07 : POWER(PMIC), IF PMIC, WPC, MST

sheet08 : AUDIO CODEC, SUB PCB

sheet09 : DISPLAY, CAMERA

sheet10 : IRIS CAM, DUAL CAM

RF1 - MAIN_ANT

LB/MB MAIN ANT (B1/2/3/4/5/8/12/13/17/18/19/20/25/26/28/34/39, B7/40 4RXD)

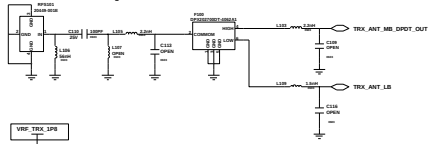

HB MAIN ANT (B7/38/40/41, B1/3/4 4RXD)

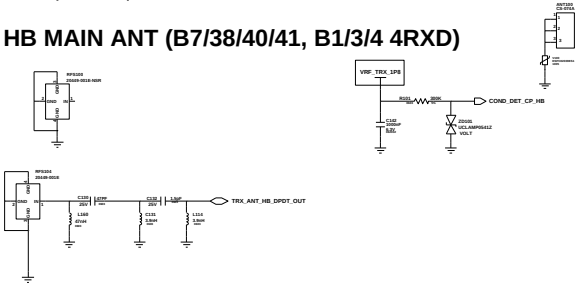

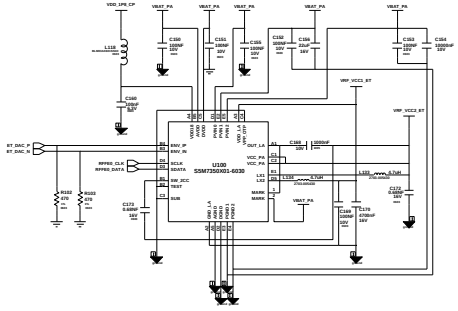

S735 ET MODULATOR

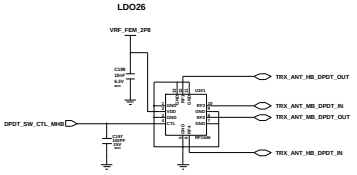

MB/HB SWITCH(DPDT)

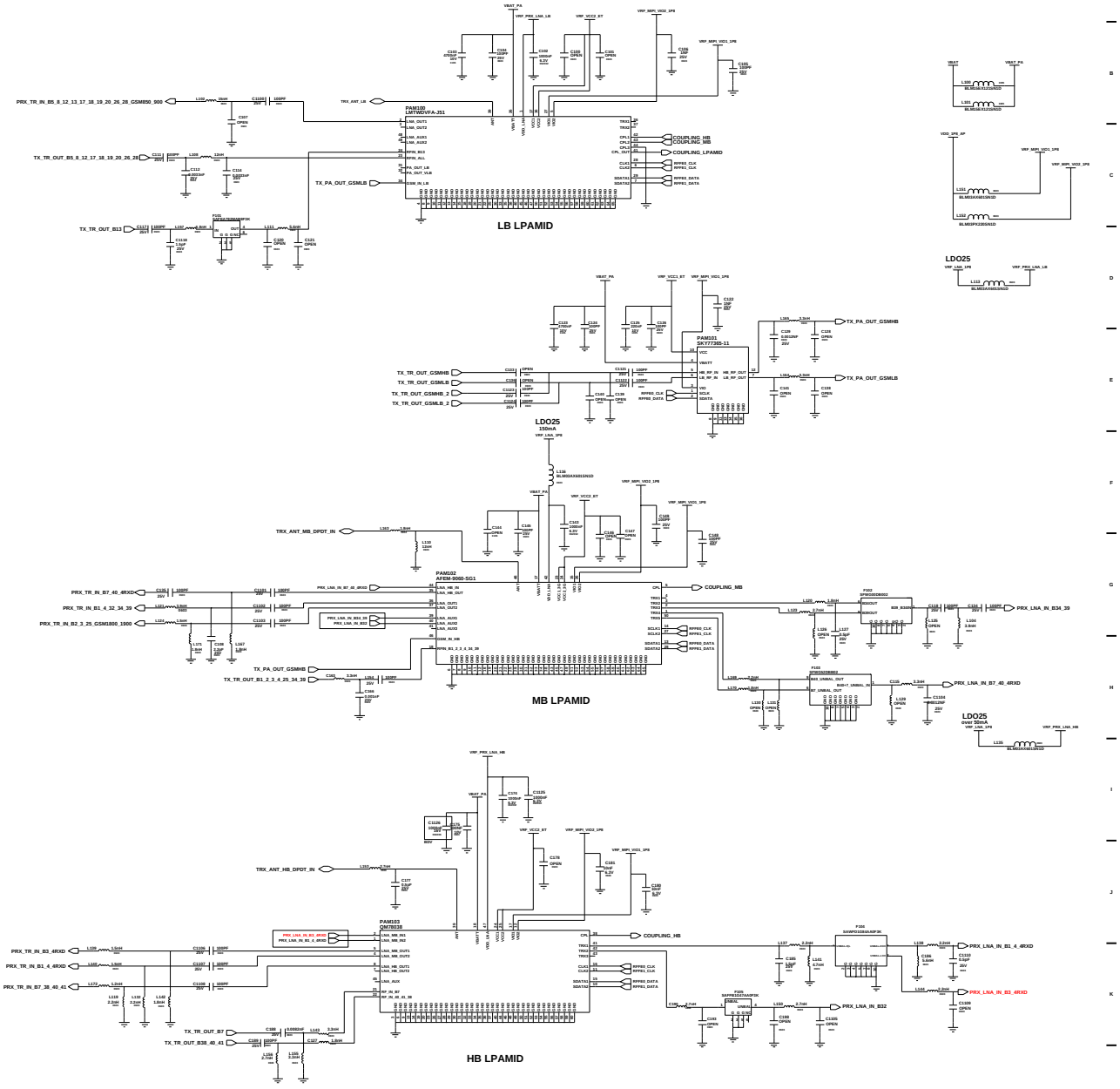

RF2

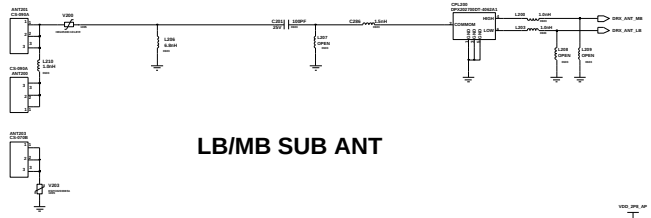

LB/MB SUB ANT

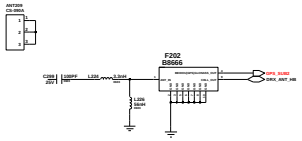

HB SUB ANT

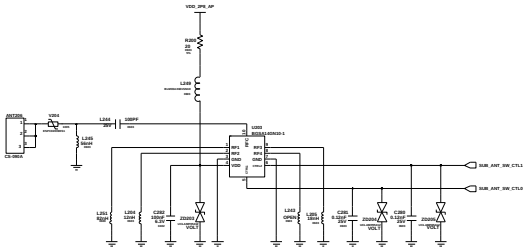

ANT SWITCH

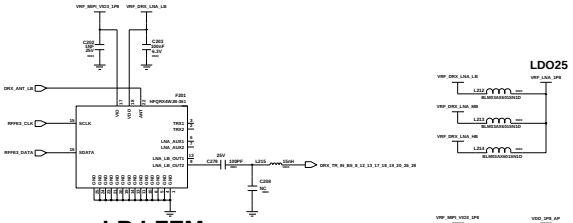

LB LFEM
(B5/8/12/13/17/18/19/20/26/28)

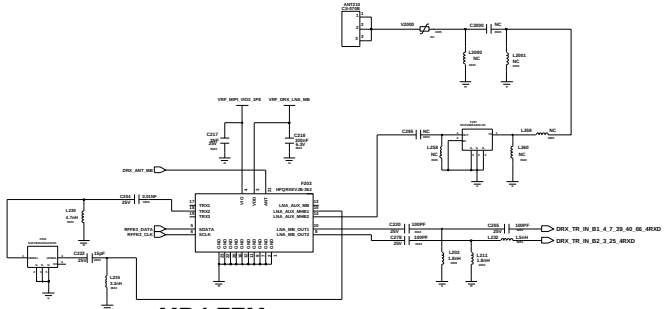

MB LFEM
(B1/4/39, B3/7/40 4RXD)

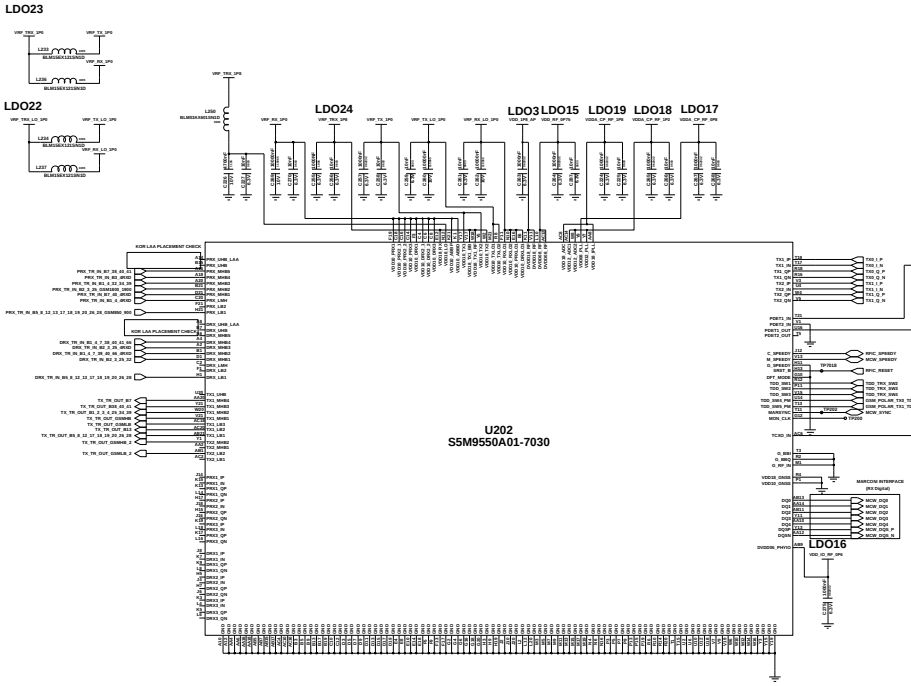

U202
S5M9550A01-7030

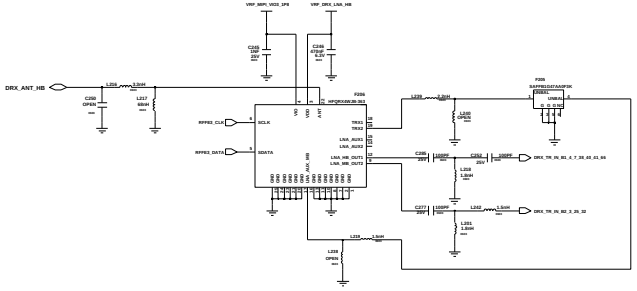

HB LFEM (B2/3/7/25/38/40/41, B1/4 4RXD)

GND_CONTACT

3. AP(EXTNOS8895) CP & UFS MEMORY

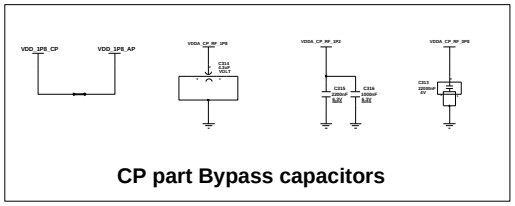

CP part Bypass capacitors

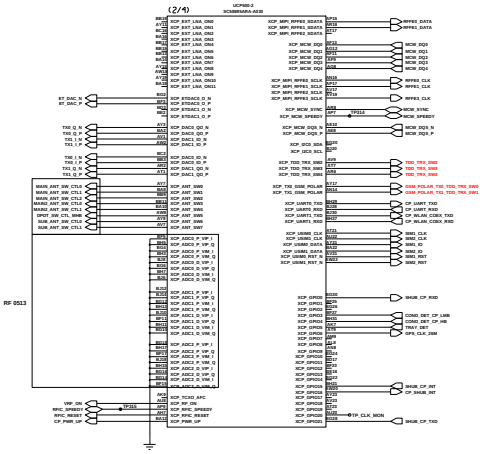

KANGCHEN CP

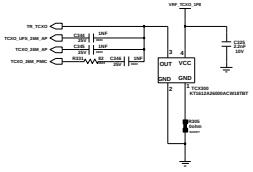

Should be placed close to AP

26MHz TCXO

TCXO Buffer

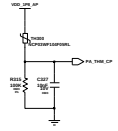

THERMISTER

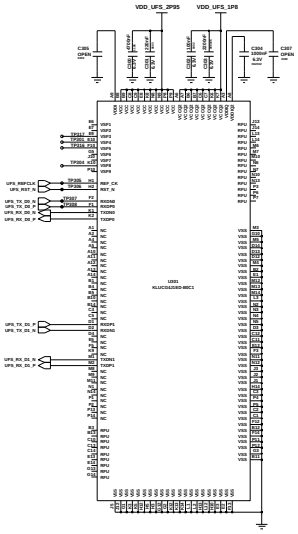

MEMORY

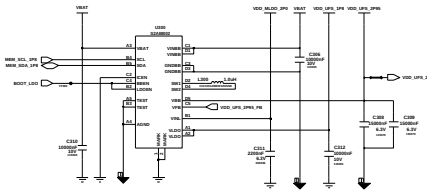

UFS BUCK BOOSTER

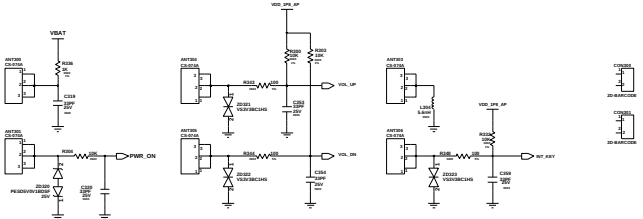

POWER / VOLUME KEY

T-FLASH / SIM / PROXY / IRIS LED / RGB

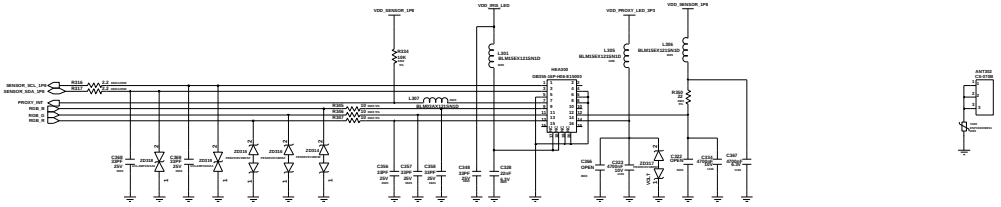

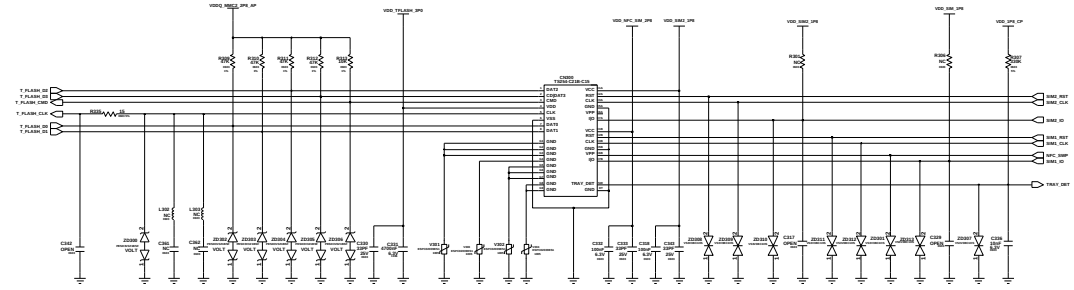

Engineer:

Changed by: user1cra | Date Changed: | Time Changed:

4. CONNECTIVITY / SENSOR

LAA
FOR KOR SKU

BT/WIFI

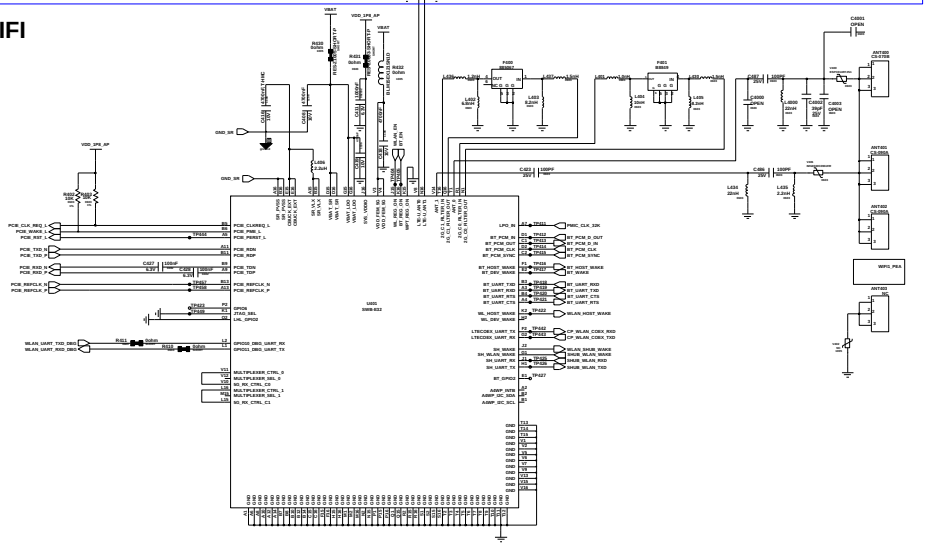

GPS + SENSOR HUB(BCM4774)

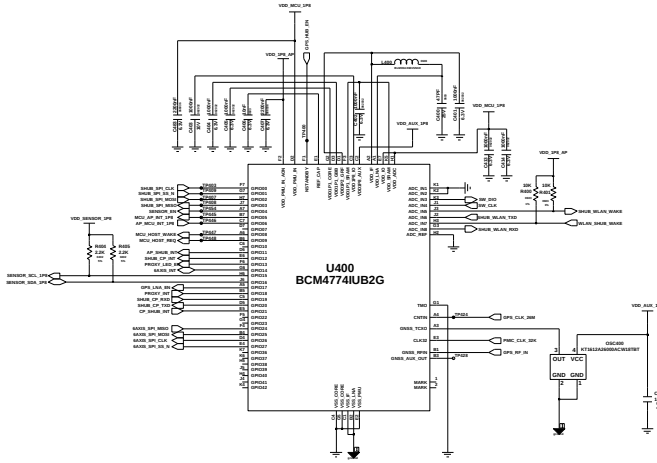

GPS

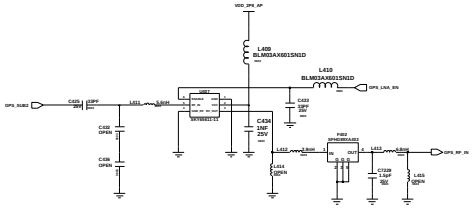

NFC

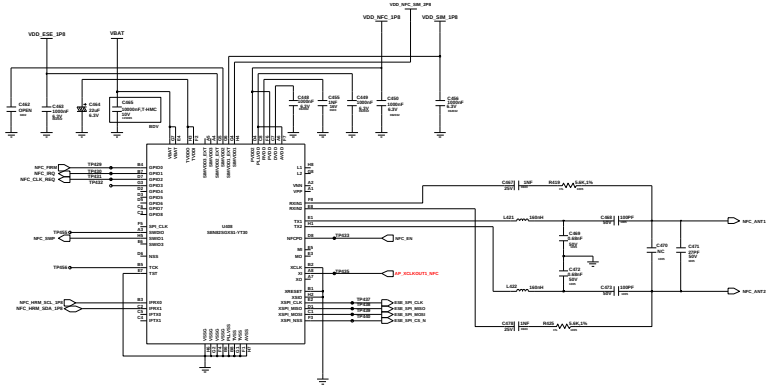

SENSORS

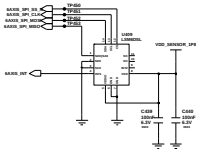

6 Axis Sensor (GYRO,ACCEL)

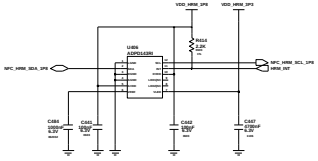

HRM Sensor

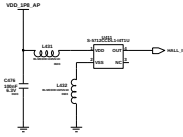

cover_detect Hall_IC

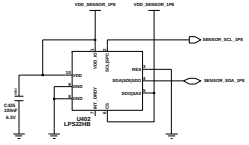

Barometer Sensor

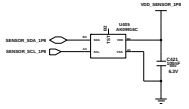

MAGNETIC SENSOR

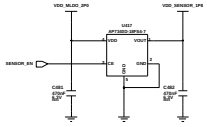

5. EXYNOS8895(KANGCHEN) & ETC

KANGCHEN_AP

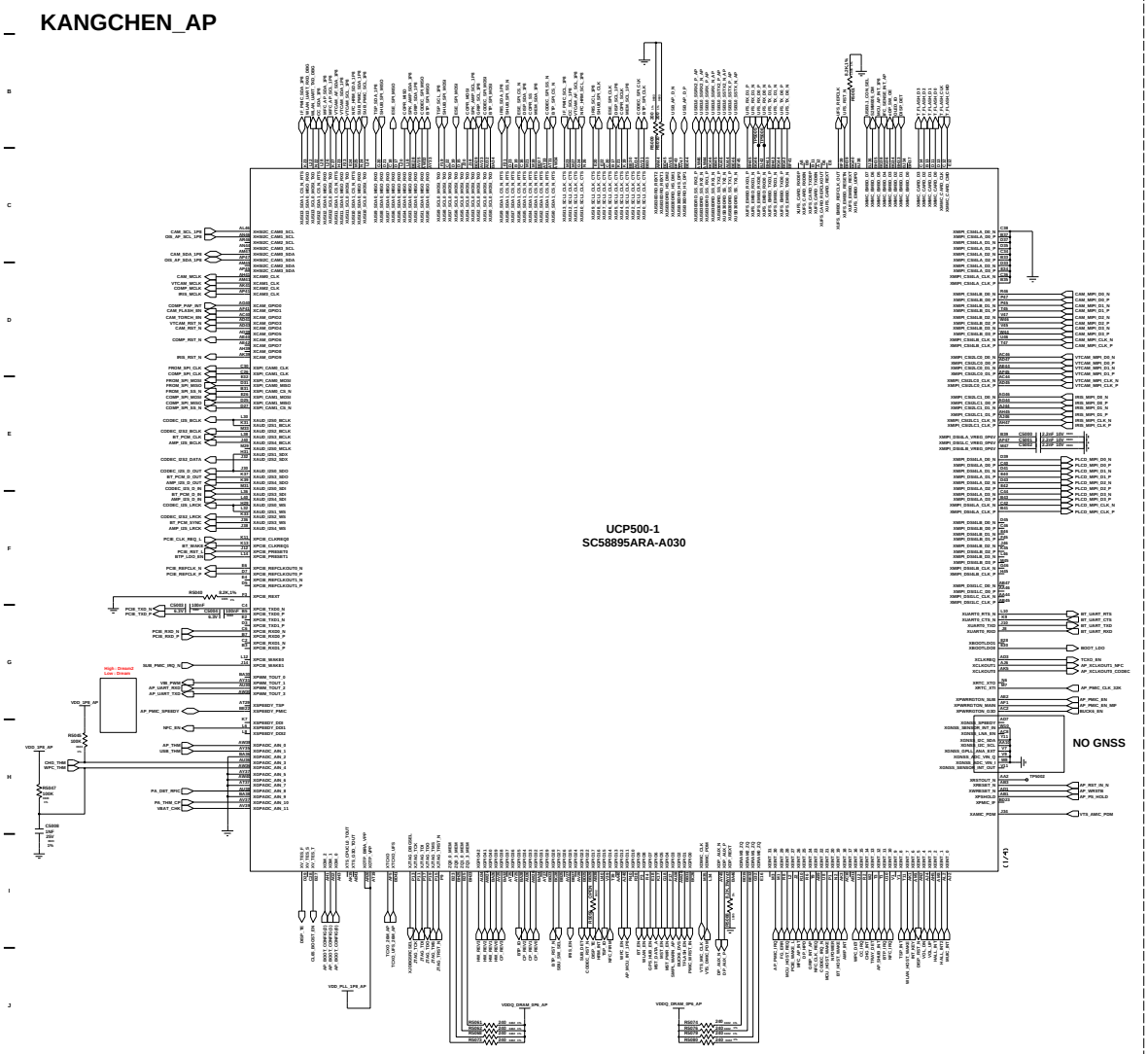

H/W I2C

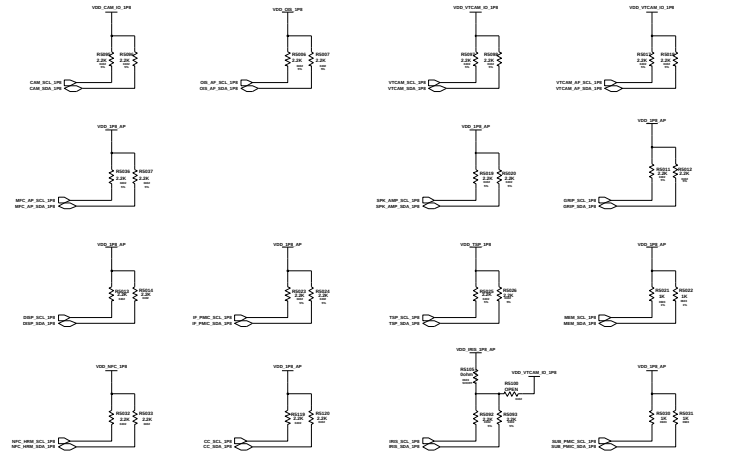

ETC

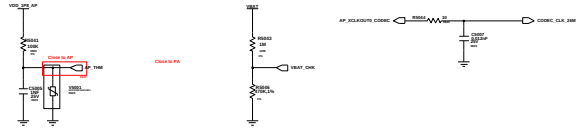

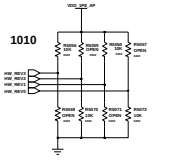

0000	
0001	DREAM2_REV0.0_BRING UP
0010	DREAM2_REV0.0A_3IN3
0011	DREAM2_REV0.1
0100	DREAM2_REV0.2
0101	DREAM2_REV0.2_AP PMIC New OTP
0110	SM-G955F_REV0.0
0111	SM-G955F_REV0.1

H/W Revision Setting

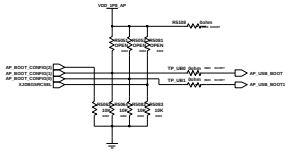

OM[2:0]	1st / 2nd
000	UFS_CH0 / USB
001	USB
010	SD CARD / USB
011	UFS_CH0 / SD CARD

iROM BOOT

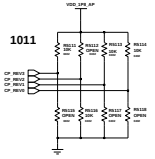

0000	REV0.0_BRING UP
0001	
0010	
0011	
0100	
0101	
0110	
0111	SM-G955F_REV0.0

CP H/W Revision Setting

PCB JTAG

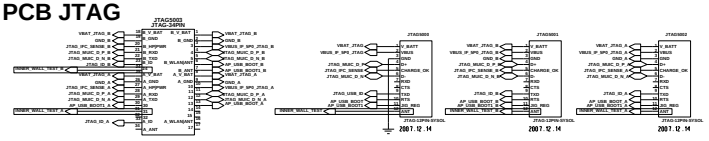

JTAG Connector

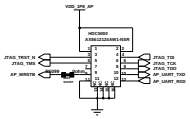

6. EXYNOS8895(KANGCHEN)

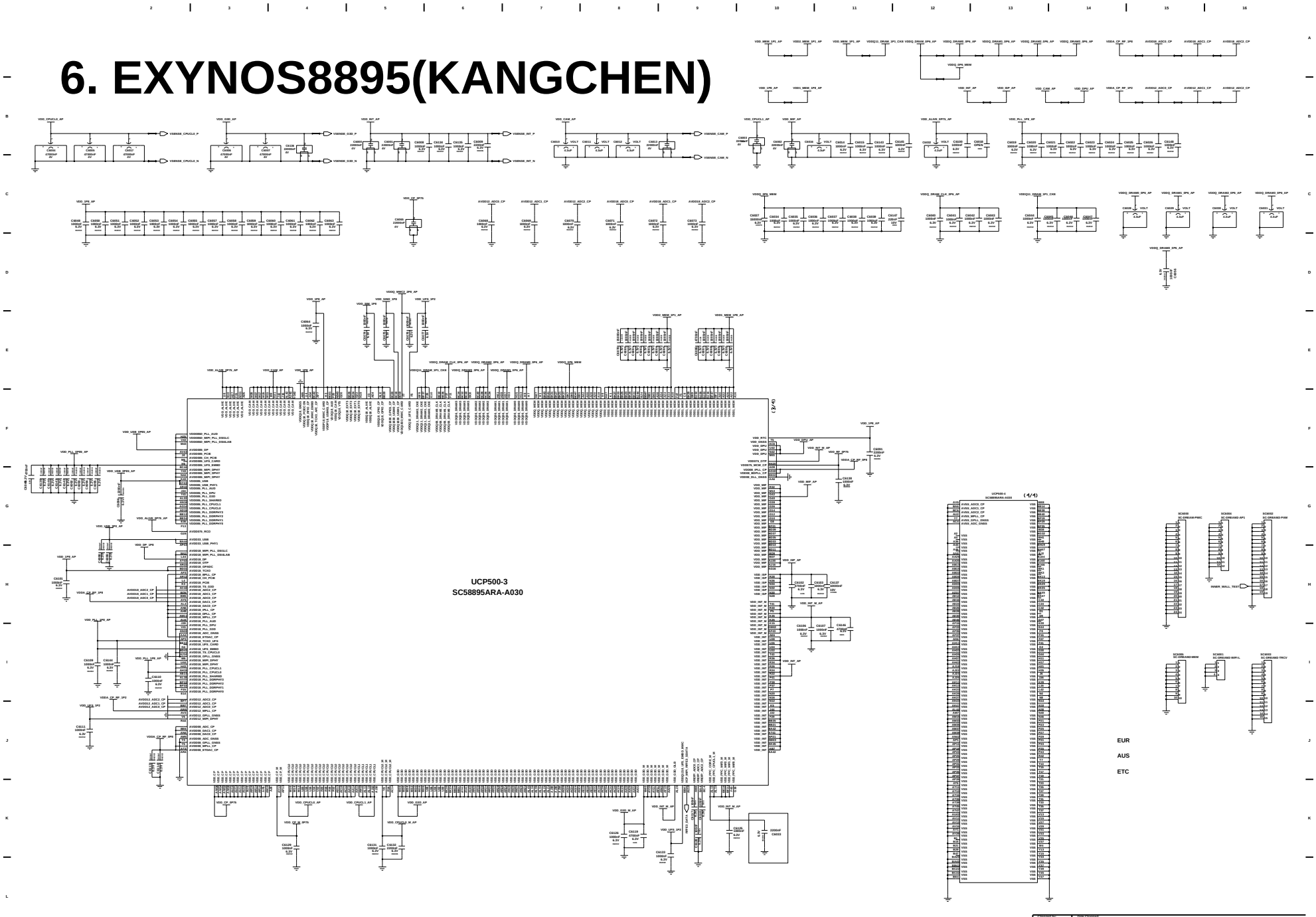

Changed by: sam02
Date Changed: Friday, January 16, 2015

7. PMIC Part

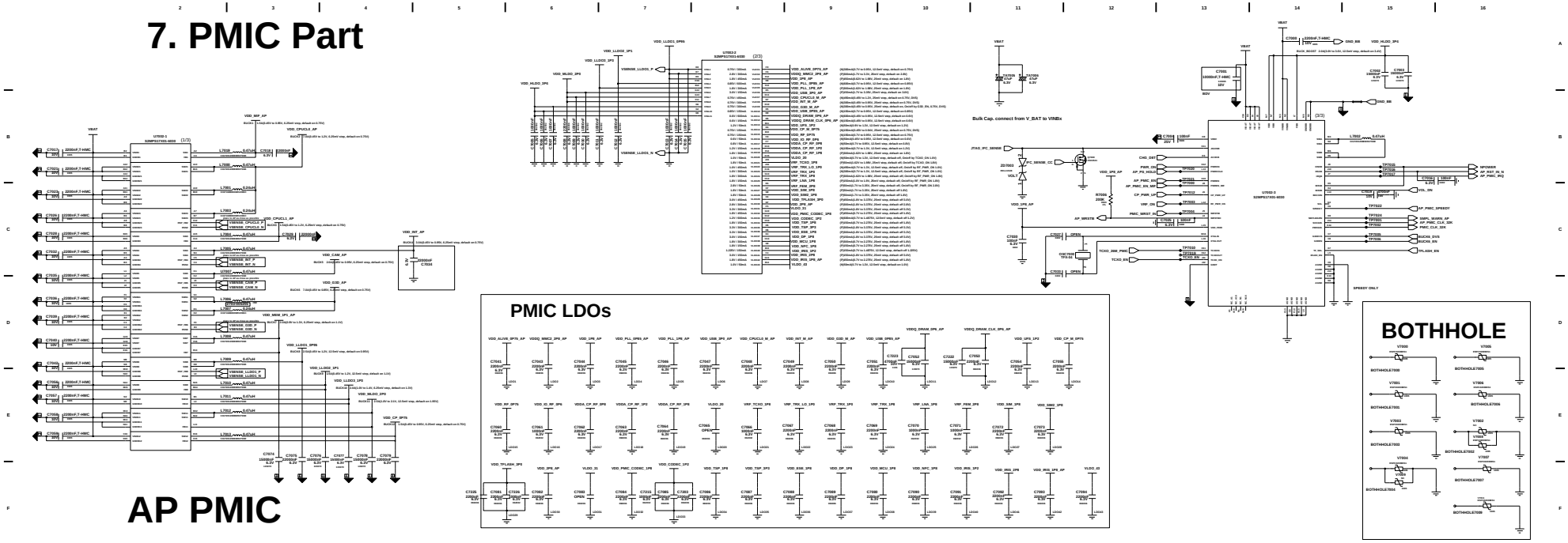
AP PMIC
PMIC LDOs
BOTHHOLE

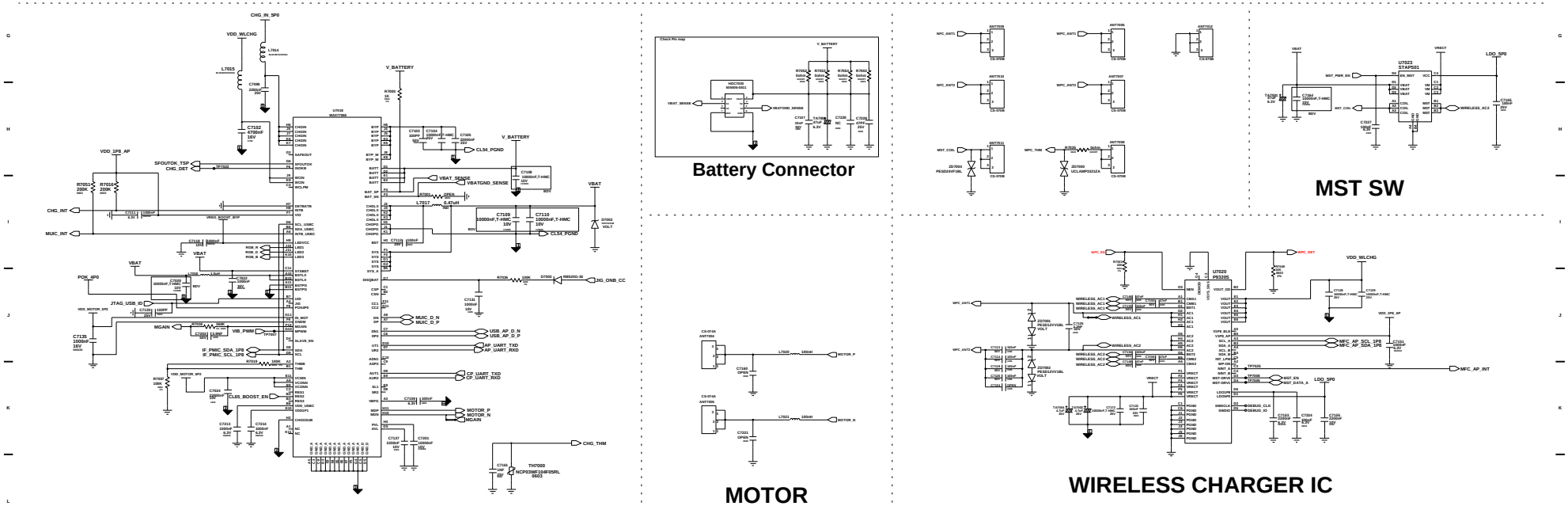
Battery Connector
MST SW
MOTOR
WIRELESS CHARGER IC

AUDIO

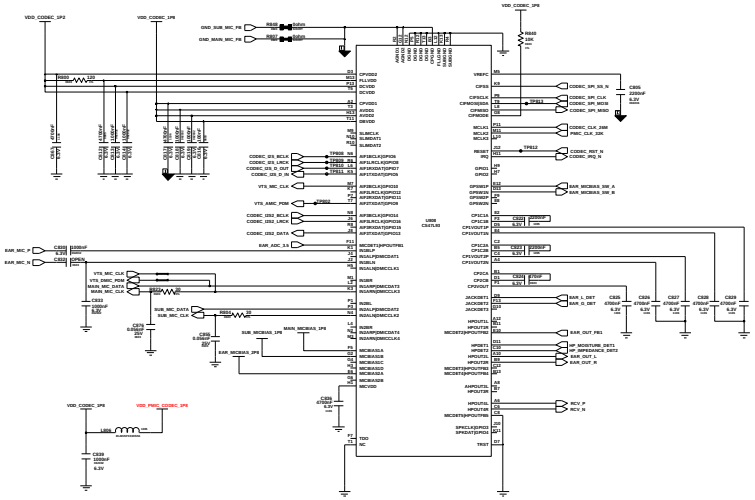

AUDIO CODEC

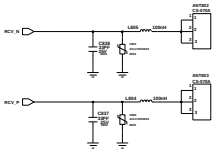

RCV CONTACT

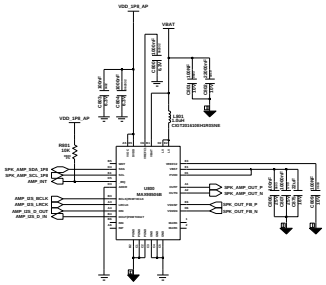

SPK AMP

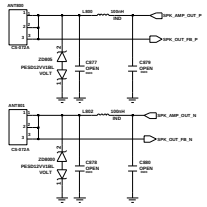

SPK CONTACT

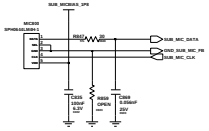

SUB MIC

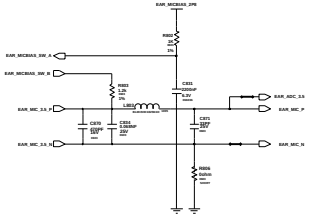

Ear MIC

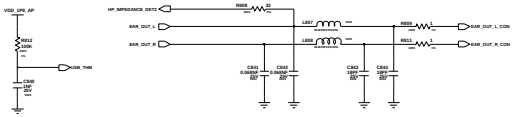

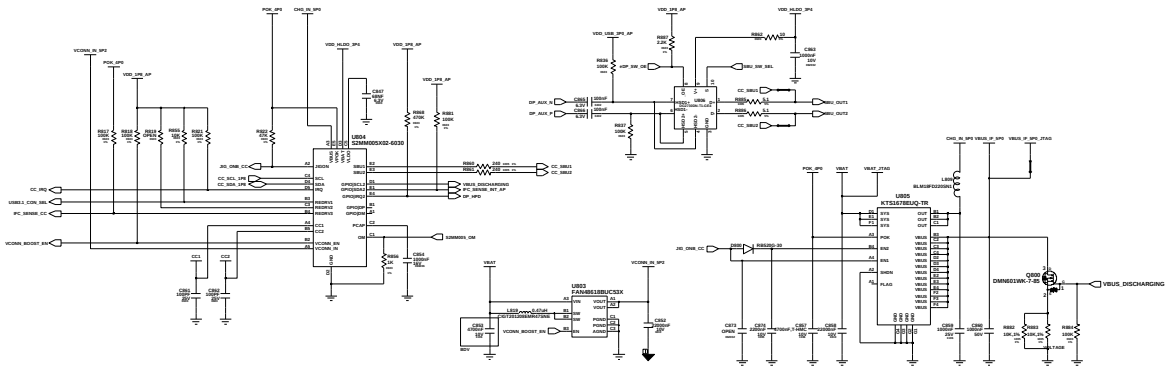

CC IC

USB TYPE-C

OVP LS

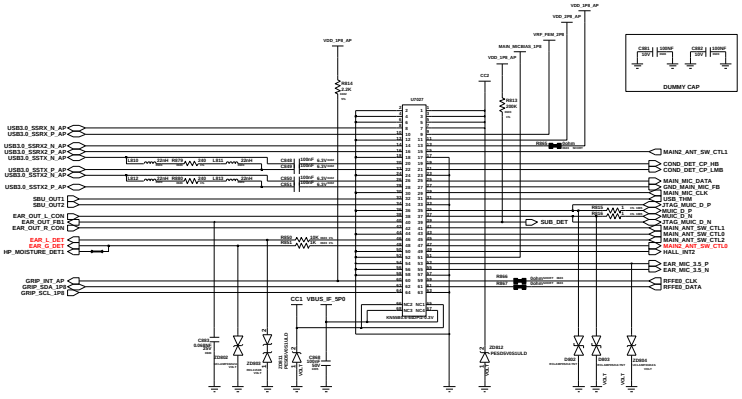

LOWER SUB PCB CON.

9. VISUAL PART 1/2

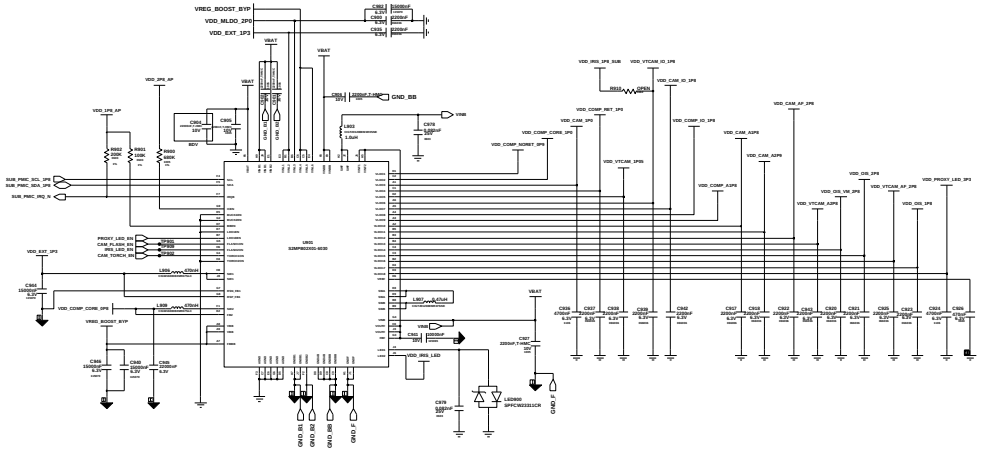

SUB_PMIC

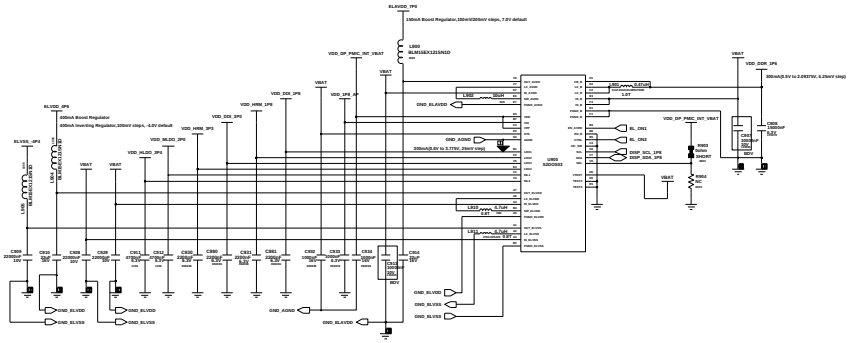

DISPLAY PMIC

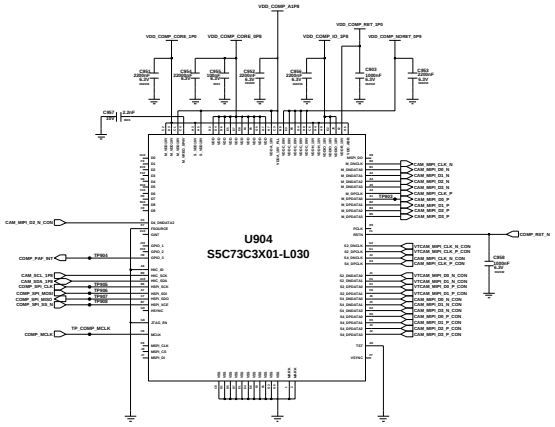

COMPANION IC

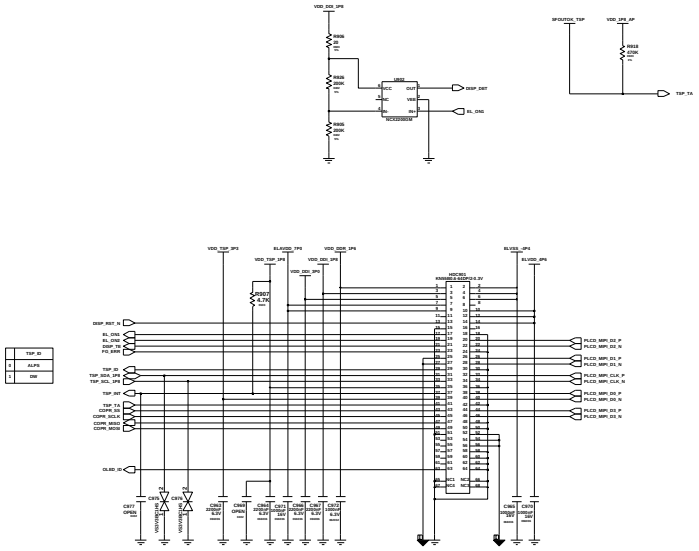

DISPLAY & FORCE CON.

10. VISUAL PART (2/2)

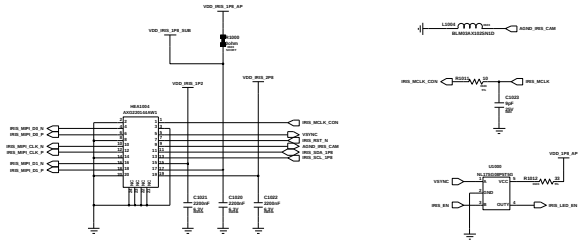

IRIS_CONNECTOR

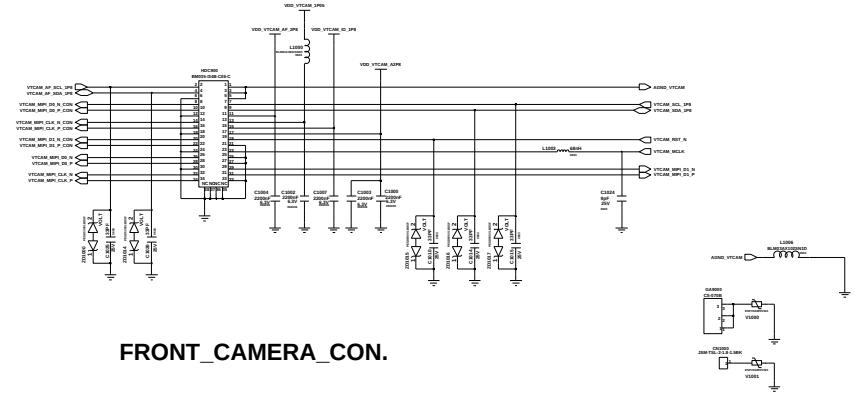

FRONT_CAMERA_CON.

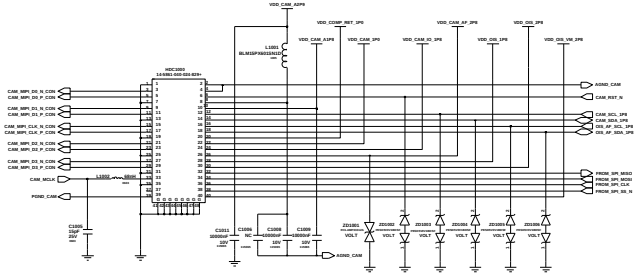

SINGLE CAMERA

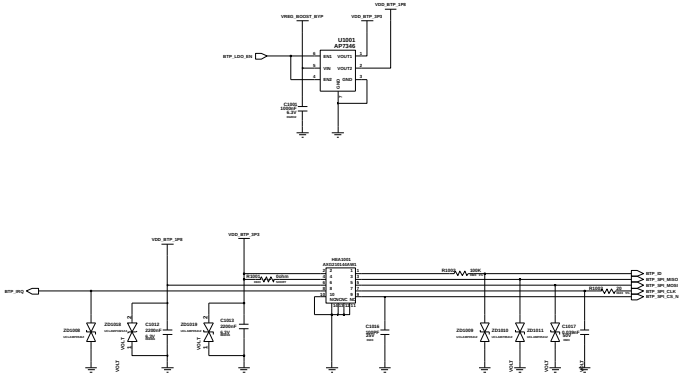

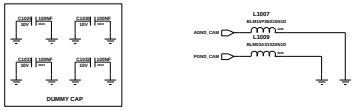

MIC800
ANT200
ANT400
U401
ANT410
BOTHOLE7000
HEA1004
HDC900
BOTHOLE7003
BOTHOLE7009
SC6001
GA9000
U402
OSC400
LED900
HDC5000
U406
HEA300
CON300
U408
ANT210
HDC7000
TA7000
U411
BOTHOLE7001
U409
CN1000
HEA1001
U1001
BOTHOLE7002
BOTHOLE7006
U901
SC6000
U7002
L903
C904
L901
C909
L902
C910
U900
C914
L911
L910
U2020
SC6008
PAM103
U101
HDC901
F100
BOTHOLE7007
RFS101
ANT800
ANT801
RFS104
RFS100
U806

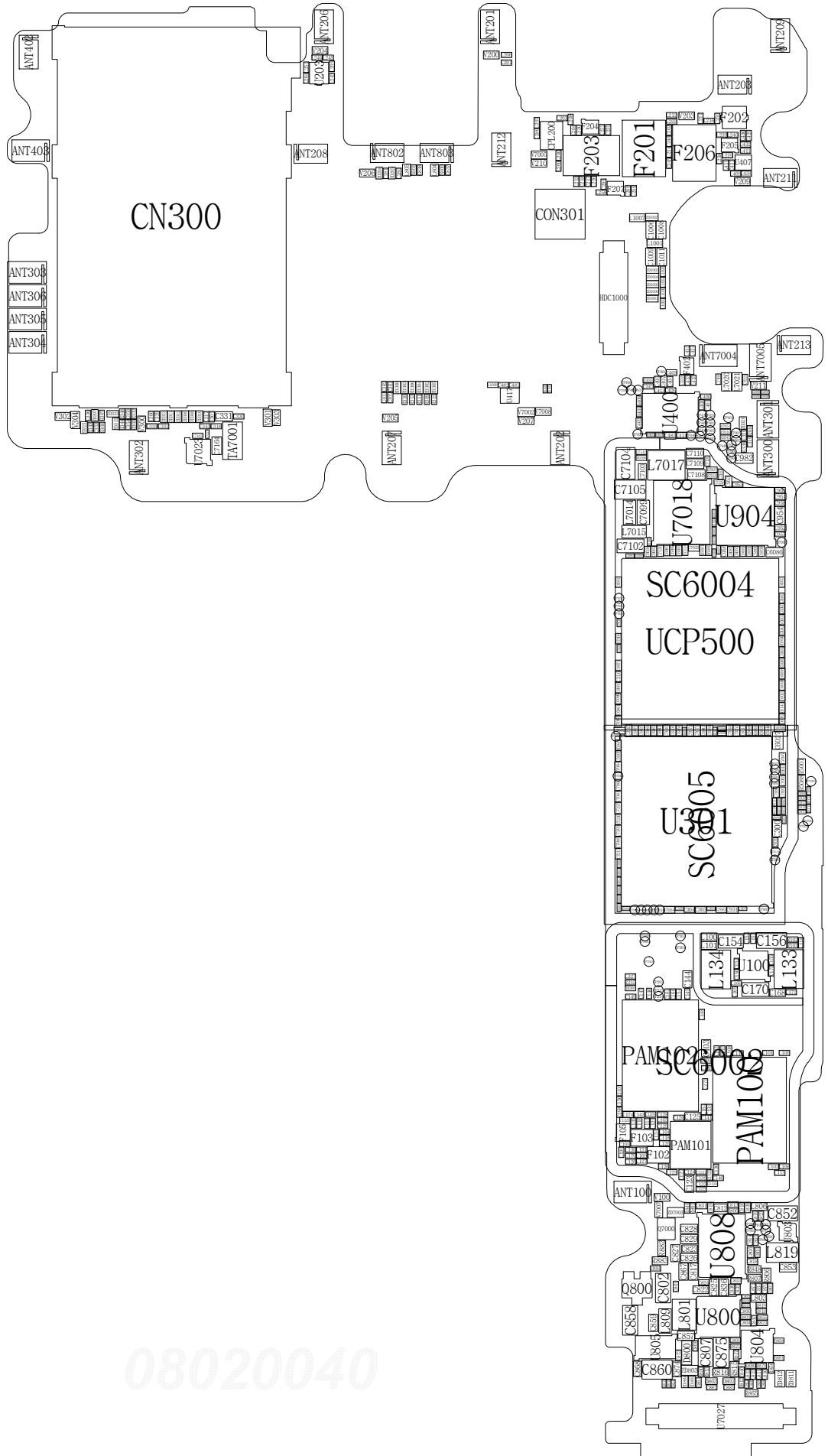
CN300
ANT408
ANT403
ANT303
ANT306
ANT305
ANT304
ANT206
ANT208
ANT201
ANT802
ANT805
ANT212
ANT202
ANT203
ANT20
ANT20
ANT7004
ANT7003
ANT213
ANT301
ANT300
ANT302
ANT100
F201
F202
F203
F206
CON301
HDC1000
J400
L7017
U7018
U904
SC6004
UCP500
U3001
SC6005
C154
C156
L134
U100
L133
C170
PAM102
SC6002
PAM102
F103
F102
PAM101
U808
C852
L803
L819
Q800
C802
C858
L801
U800
L804
C860
C807
C875
U7027

08020040