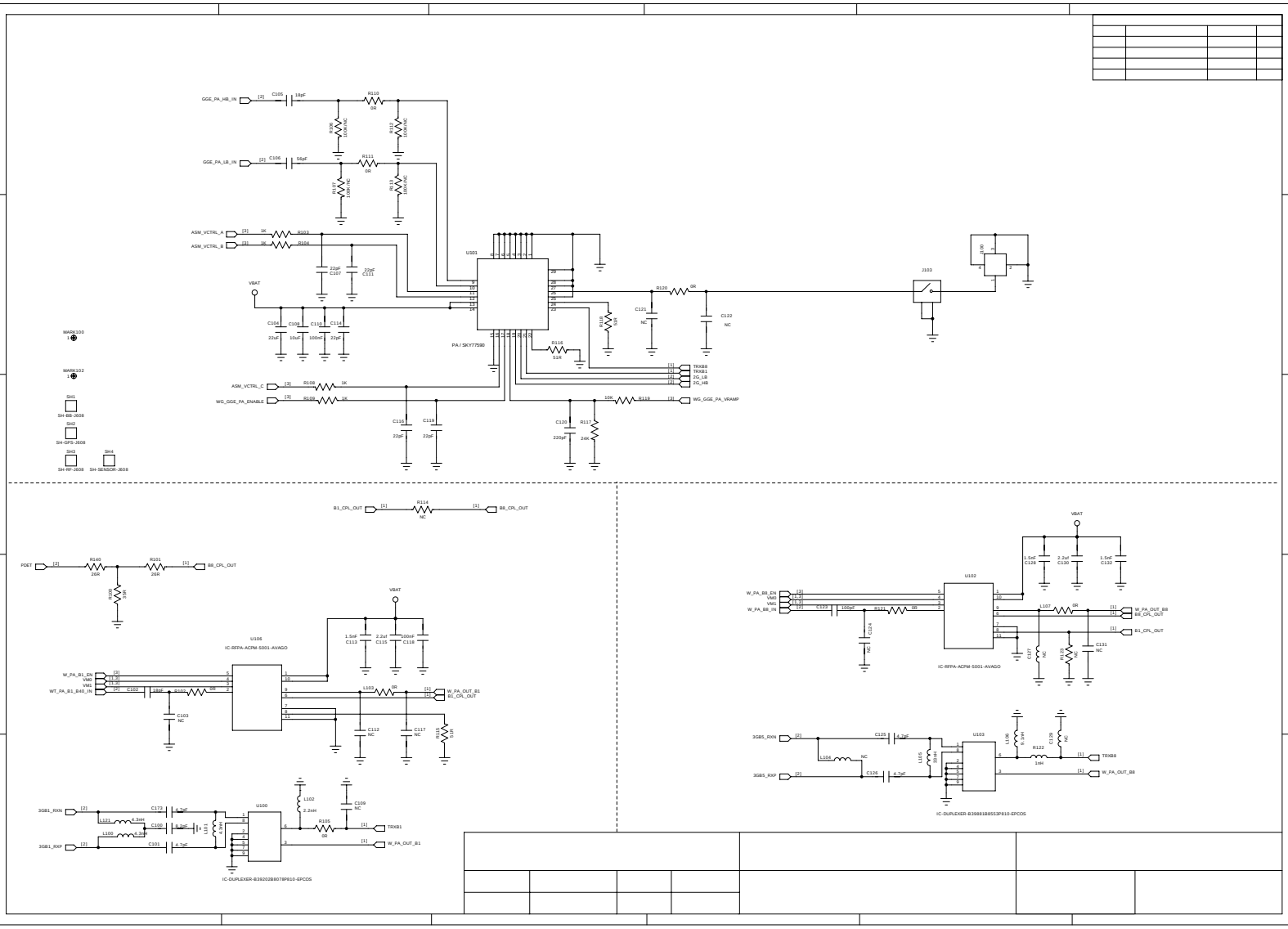
GGE_PA_HB_IN
C105 18pF
R110 0R
R108 DNP NC
R112 DNP NC
GGE_PA_LB_IN
C106 56pF
R111 0R
R107 DNP NC
R113 DNP NC
ASM_VCTRL_A
ASM_VCTRL_B
R103 1K
R104 1K
22pF C107
22pF C111
VBAT
C104 22pF
C108 10pF
C110 100nF
C116 22pF
U101
PA / SKY77590
R116 51R
R118 10R
C121 NC
R120 0R
C122 NC
J103
J100
MARK100
MARK102
SH1 SH-BB-J608
SH2 SH-GPS-J608
SH3 SH-RF-J608
SH4 SH-SENSOR-J608
ASM_VCTRL_C
WG_GGE_PA_ENABLE
R109 1K
R108 1K
C115 22pF
C119 22pF
C120 220pF
R117 24K
10K
R119
WG_GGE_PA_VRAMP
TRXB8
TRXB1
2G_LB
2G_HB
B1_CPL_OUT
R114 NC
B8_CPL_OUT
PDET
R140 20R
R101 20R
R105 20R
U106
IC-RFPA-ACPM-5001-AVAGO
W_PA_B1_EN
VMS
VM1
WT_PA_B1_R40_IN
C102 18pF
R102 0R
C103 NC
C113 1.5nF
C115 2.2uF
C118 100nF
L102 0R
W_PA_OUT_B1
B1_CPL_OUT
C112 NC
C117 NC
R115 0R
U100
IC-DUPLEXER-B39202B8078P810-EPCOS
3GB1_RXN
3GB1_RXP
C172 4.7pF
L121 4.3nH
C100 8.2pF
L100 8.2nH
C101 4.7pF
L101
L102 2.2nH
C109 NC
R106 0R
TRXB1
W_PA_OUT_B1
U102
IC-RFPA-ACPM-5001-AVAGO
W_PA_B8_EN
VMS
VM1
W_PA_B8_IN
C123 100pF
R121 0R
C124 NC
C128 1.5nF
C130 2.2uF
C132 1.5nF
L107 0R
W_PA_OUT_B8
B8_CPL_OUT
B1_CPL_OUT
C127 NC
R125 NC
C131 NC
U103
IC-DUPLEXER-B39881B8553P810-EPCOS
3GB5_RXN
3GB5_RXP
C125 4.7pF
L104 NC
C126 4.7pF
L105 20nH
L106 2.7nH
C129 NC
R122 1nH
TRXB8
W_PA_OUT_B8

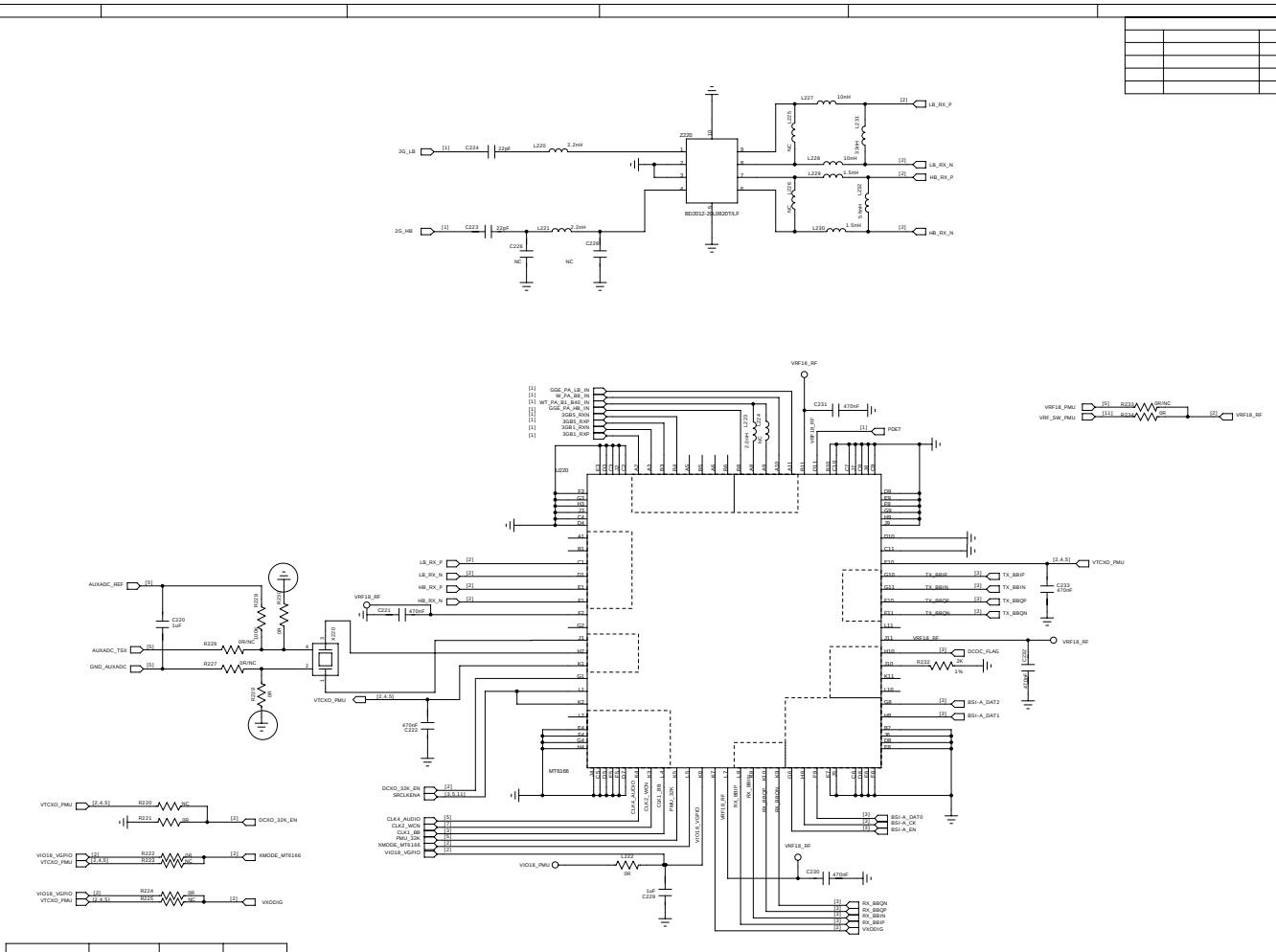
Z220
BD2012-2B1/B20T/LF
2G_LB
2G_HB
C224
22pF
C223
22pF
L220
2.2nH
L221
2.2nH
C226
NC
C228
NC
L227
10nH
L228
10nH
L229
1.5nH
L230
1.5nH
L225
NC
L226
NC
L231
3.9nH
L232
3.9nH
LB_RX_P
LB_RX_N
HB_RX_P
HB_RX_N
U220
MT6166
VRF18_RF
C231
470nF
PDET
VRF18_PMU
VRF_SW_PMU
R233
0R/NC
R234
0R
AUXADC_REF
AUXADC_TSX
GND_AUXADC
C220
1uF
R226
0R/NC
R227
0R/NC
R228
0R
R229
0R
U203
VTCXO_PMU
C221
470nF
C222
470nF
C233
470nF
C232
1uF
DCOC_FLAG
R232
0R
1%
BSI-A_DAT2
BSI-A_DAT1
BSI-A_DAT0
BSI-A_CK
BSI-A_EN
DCXO_32K_EN
SRCLKENA
CLK4_AUDIO
CLK2_WCN
CLK1_BB
PMU_32K
XMODE_MT6166
VIO18_VGPIO
VIO18_PMU
R220
0R
R221
0R
DCXO_32K_EN
R222
0R
R223
0R
XMODE_MT6166
R224
0R
R225
0R
VKDDIG
L222
0R
C229
1uF
C230
470nF
RX_BBQN
RX_BBQP
RX_BBIN
RX_BBIP
VKDDIG
TX_BBIP
TX_BBIN
TX_BBQP
TX_BBQN

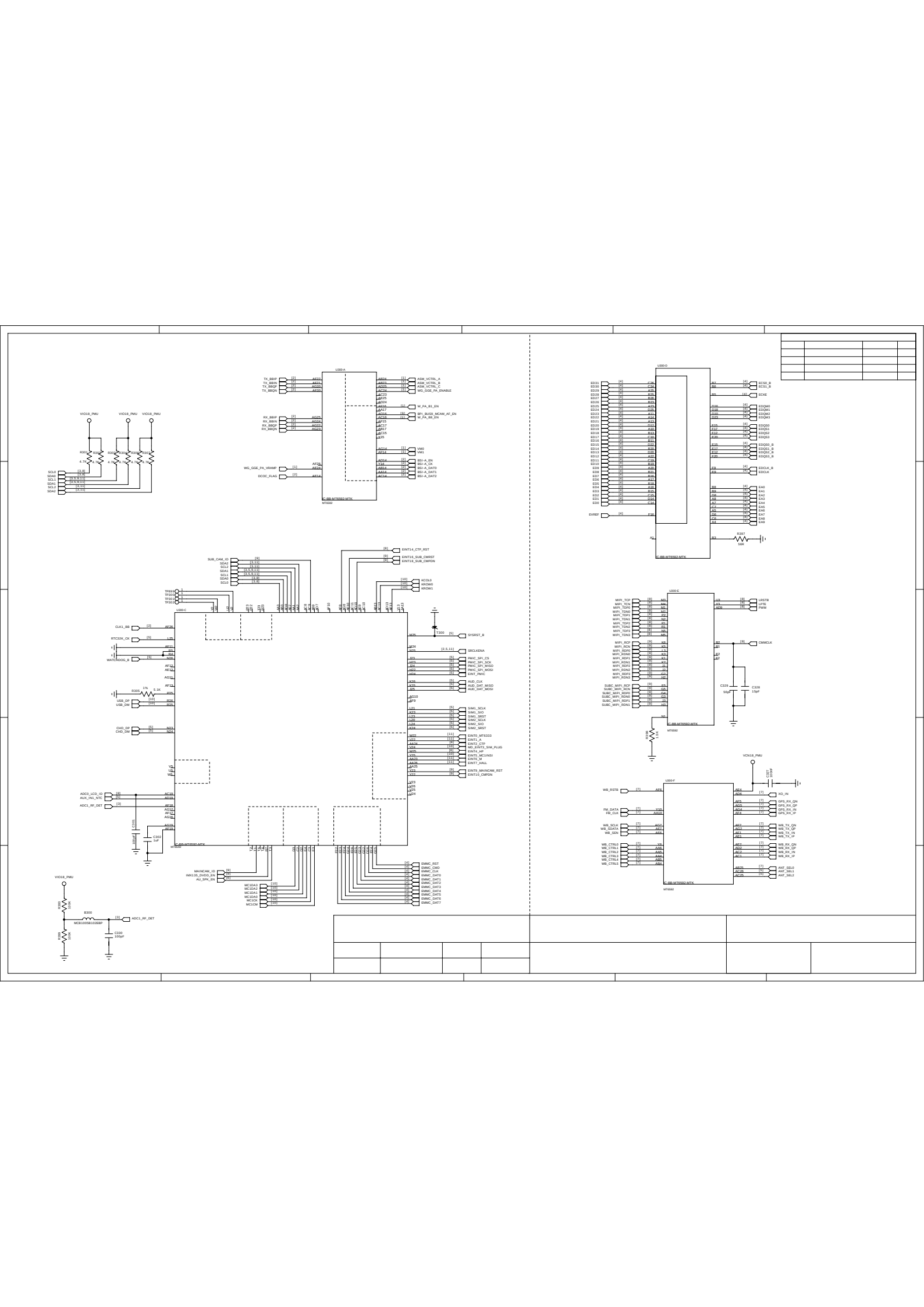
U300-A
U300-B
U300-C
U300-D
U300-E
U300-F
C-BB-MT6592-MTK
MT6592
VIO18_PMU
VCN18_PMU
TX_BBIP
TX_BBIN
TX_BBQP
TX_BBQN
RX_BBIP
RX_BBIN
RX_BBQP
RX_BBQN
WG_GGE_PA_VRAMP
DCOC_FLAG
ASM_VCTRL_A
ASM_VCTRL_B
ASM_VCTRL_C
WG_GGE_PA_ENABLE
W_PA_B1_EN
BPI_BUS9_MCAM_AF_EN
W_PA_B8_EN
VM0
VM1
BSI-A_EN
BSI-A_CK
BSI-A_DAT0
BSI-A_DAT1
BSI-A_DAT2
SCL0
SDA0
SCL1
SDA1
SCL2
SDA2
SUB_CAM_ID
EINT14_CTP_RST
EINT16_SUB_CMRST
EINT18_SUB_CMPDN
KCOL0
KROW0
KROW1
TP80
TP302
TP303
TP304
CLK1_BB
RTC32K_CK
WATCHDOG_B
USB_DP
USB_DM
CHD_DP
CHD_DM
R305
1%
5.1K
SYSRST_B
SRCLKENA
PMIC_SPI_CS
PMIC_SPI_SCK
PMIC_SPI_MISO
PMIC_SPI_MOSI
EINT_PMIC
AUD_CLK
AUD_DAT_MISO
AUD_DAT_MOSI
SIM1_SCLK
SIM1_SIO
SIM1_SRST
SIM2_SCLK
SIM2_SIO
SIM2_SRST
EINT0_MT6333
EINT1_A
EINT2_CTP
MD_EINT3_SIM_PLUG
EINT4_HP
EINT5_MC1INSI
EINT6_M
EINT7_HAL1
EINT9_MAINCAM_RST
EINT10_CMPDN
ADC3_LCD_ID
AUX_IN1_NTC
ADC1_RF_DET
C310
100pF
C302
1uF
MAINCAM_ID
IMX135_DVDD_EN
AU_SPK_EN
MC1DA3
MC1DA2
MC1DA1
MC1DA0
MC1CK
MC1CM
SMMC_RST
SMMC_CMD
SMMC_CLK
SMMC_DAT0
SMMC_DAT1
SMMC_DAT2
SMMC_DAT3
SMMC_DAT4
SMMC_DAT5
SMMC_DAT6
SMMC_DAT7
R306
10.8K
R308
10.8K
R300
MCB100SB102EBP
C330
100pF
ADC1_RF_DET
ECS0_B
ECS1_B
ECKE
EDQM0
EDQM1
EDQM2
EDQM3
EDQS0
EDQS1
EDQS2
EDQS3
EDQS0_B
EDQS1_B
EDQS2_B
EDQS3_B
EDCLK_B
EDCLK
EA0
EA1
EA2
EA3
EA4
EA5
EA6
EA7
EA8
EA9
EVREF
R207
56K
MIPI_TCP
MIPI_TCN
MIPI_TDN0
MIPI_TDP0
MIPI_TDN1
MIPI_TDP1
MIPI_TDN2
MIPI_TDP2
MIPI_TDN3
MIPI_TDP3
MIPI_RCP
MIPI_RCN
MIPI_RDP0
MIPI_RDN0
MIPI_RDP1
MIPI_RDN1
MIPI_RDP2
MIPI_RDN2
MIPI_RDP3
MIPI_RDN3
SUBC_MIPI_RCP
SUBC_MIPI_RCN
SUBC_MIPI_RDP0
SUBC_MIPI_RDN0
SUBC_MIPI_RDP1
SUBC_MIPI_RDN1
LRSTB
LPTE
PWM
CMMCLK
C329
56pF
C328
1.5pF
R309
10.8K
WB_RSTB
FM_DATA
FM_CLK
WB_SCLK
WB_SDATA
WB_SEN
WB_CTRL0
WB_CTRL1
WB_CTRL2
WB_CTRL3
WB_CTRL4
WB_CTRL5
C307
100pF
NO_IN
GPS_RX_QN
GPS_RX_QP
GPS_RX_IN
GPS_RX_IP
WB_TX_QN
WB_TX_QP
WB_TX_IN
WB_TX_IP
WB_RX_QN
WB_RX_QP
WB_RX_IN
WB_RX_IP
ANT_SEL0
ANT_SEL1
ANT_SEL2

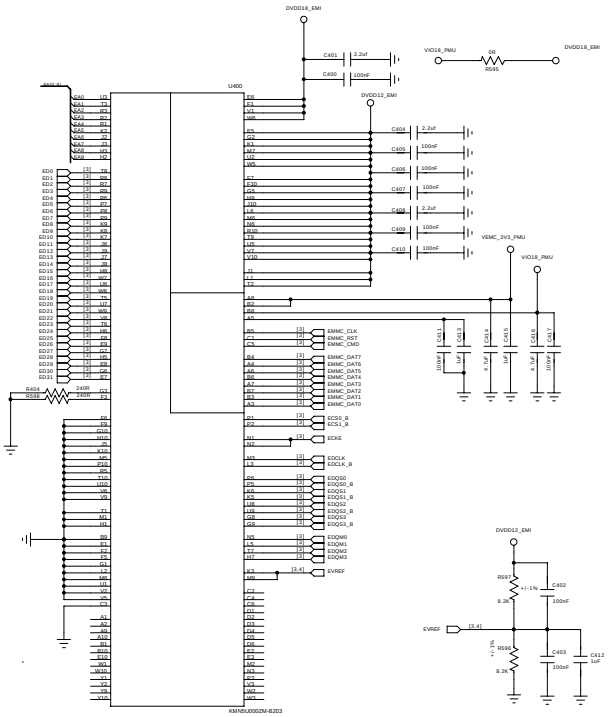
DVDD18_EMI
C401 2.2uF
C400 100nF
VIO18_PMU
0R
R696
DVDD18_EMI
U400
DVDD12_EMI
C404 2.2uF
C405 100nF
C406 100nF
C407 100nF
C408 2.2uF
C409 100nF
C410 100nF
VEMC_3V3_PMU
VIO18_PMU
C411 10uF
C413 1uF
C414 6.1uF
C415 1uF
C416 4.7uF
C417 10uF
R604 240R
R608 240R
EMMC_CLK
EMMC_RST
EMMC_CMD
EMMC_DAT7
EMMC_DAT6
EMMC_DAT5
EMMC_DAT4
EMMC_DAT3
EMMC_DAT2
EMMC_DAT1
EMMC_DAT0
CS0_B
CS1_B
CKE
CDCLK
CDCLK_B
DQS0
DQS0_B
DQS1
DQS1_B
DQS2
DQS2_B
DQS3
DQS3_B
DQM0
DQM1
DQM2
DQM3
EVREF
KMN5U000ZM-B203
DVDD12_EMI
R697 8.2K +/-1%
C402 100nF
EVREF
R698 8.2K +/-1%
C403 100nF
C412 1uF

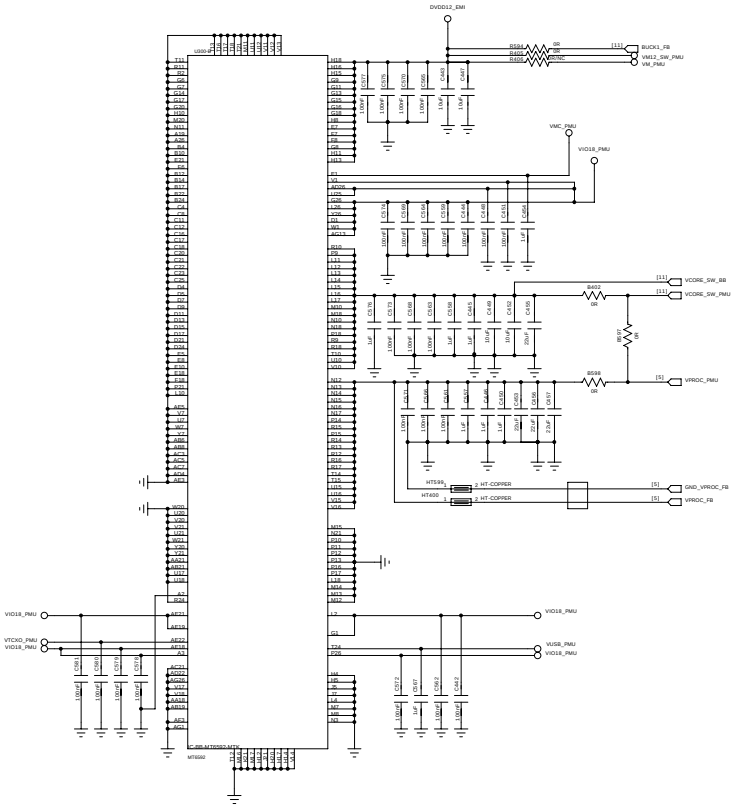
DVDD12_EMI
U400-P
R594 0R
R405 0R
R406 0R/NC
BUCK1_FB
VM12_SW_PMU
VM_PMU
VMC_PMU
VIO18_PMU
R402 0R
VCORE_SW_BB
VCORE_SW_PMU
R607 0R
R608 0R
VPROC_PMU
MTS99
HT600
2 NT-COPPER
GND_VPROC_FB
VPROC_FB
VIO18_PMU
VTCXO_PMU
VIO18_PMU
VUSB_PMU
VIO18_PMU
C-BB-M705B2-MTK
MT6582

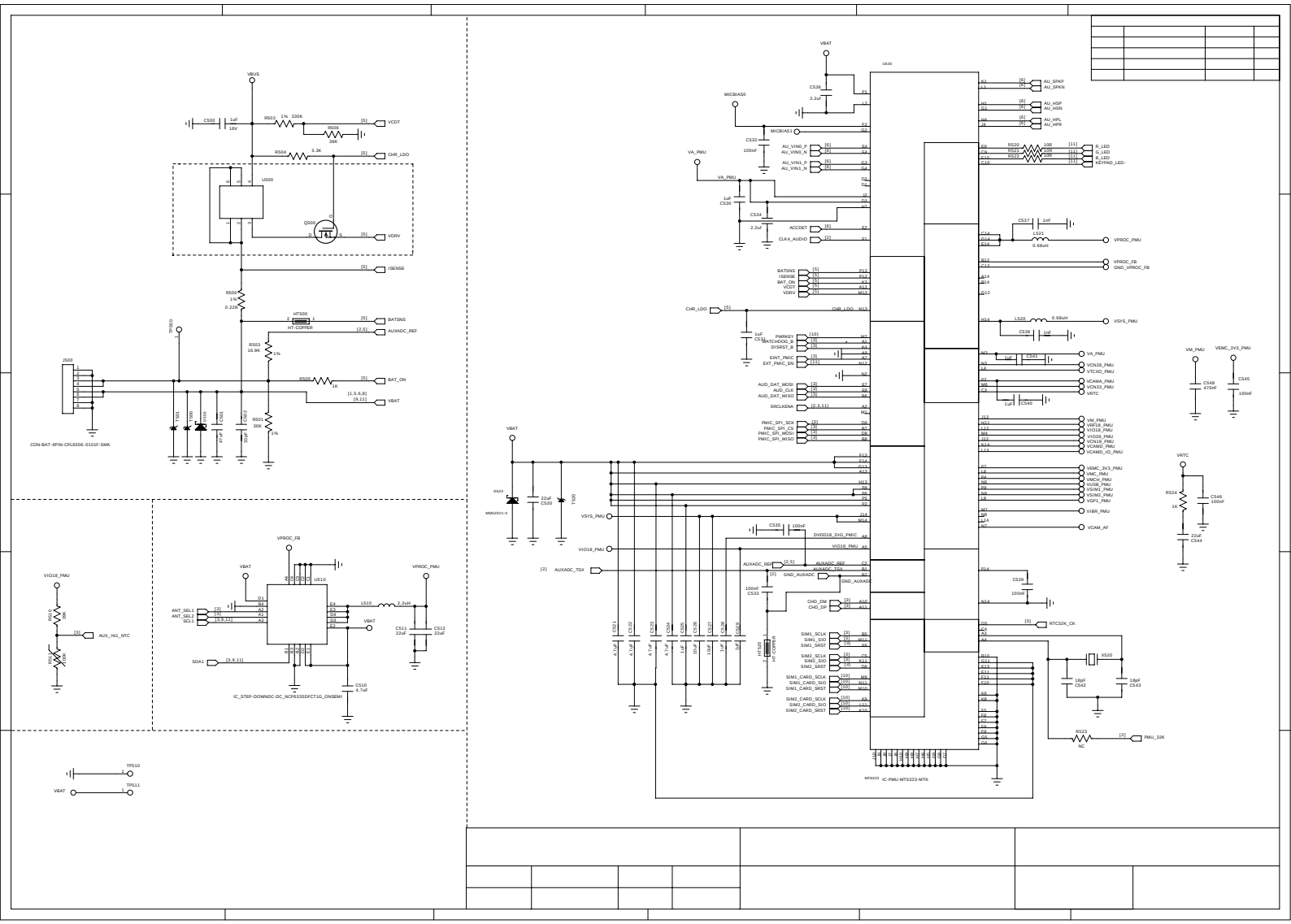
VBUS
CS00 1uF 16V
RS02 1% 330K
RS06 39K
RS04 3.3K
VCDT
CHR_LDO
US00
QS00
VDRV
ISENSE
RS00 1% 0.22R
HT500
HT-COPPER
BATSNS
AUXADC_REF
RS03 16.9K 1%
RS05 1K
BAT_ON
VBAT
RS01 30K 1%
CON-BAT-6PIN-CPL6506-0101F-SMK
VIO18_PMU
RS10 NC
RS11 NC
AUX_IN1_NTC
VPROC_FB
US10
ANT_SEL1
ANT_SEL2
SCL1
SDA1
LS10 2.2uH
VPROC_PMU
CS11 22uF
CS12 22uF
CS10 4.7uF
IC_STEP-DOWNDC-DC_NCP6335DFCT1G_ONSEMI
TPS10
TPS11
US20
MICBIAS0
MICBIAS1
VA_PMU
AU_VIN0_P
AU_VIN0_N
AU_VIN1_P
AU_VIN1_N
ACCDET
CLK4_AUDIO
BATSNS
ISENSE
BAT_ON
VCDT
VDRV
CHR_LDO
PWRKEY
WATCHDOG_B
SYSRST_B
EINT_PMIC
EXT_PMIC_IN
AUD_DAT_MOSI
AUD_CLK
AUD_DAT_MISO
SRCLKENA
PMIC_SPI_SCK
PMIC_SPI_CS
PMIC_SPI_MOSI
PMIC_SPI_MISO
VSYS_PMU
VIO18_PMU
AUXADC_TSX
AUXADC_REF
AUXADC_RST
GND_AUXADC
DVDD18_DIG_PMIC
CHD_DM
CHD_DP
SIM1_SCLK
SIM1_SIO
SIM1_SRST
SIM2_SCLK
SIM2_SIO
SIM2_SRST
SIM1_CARD_SCLK
SIM1_CARD_SIO
SIM1_CARD_SRST
SIM2_CARD_SCLK
SIM2_CARD_SIO
SIM2_CARD_SRST
AU_SPKP
AU_SPKN
AU_HSP
AU_HSN
AU_HPL
AU_HPR
R_LED
G_LED
B_LED
KEYPAD_LED-
VPROC_PMU
VPROC_FB
GND_VPROC_FB
VSYS_PMU
VA_PMU
VCN28_PMU
VTCXO_PMU
VCAMA_PMU
VCN33_PMU
VRTC
VM_PMU
VIO18_PMU
VIO28_PMU
VCN18_PMU
VCAMD_PMU
VCAMD_IO_PMU
VEMC_3V3_PMU
VMC_PMU
VMCH_PMU
VUSB_PMU
VSIM1_PMU
VSIM2_PMU
VGF1_PMU
VIBR_PMU
VCAM_AF
RTC32K_CK
PMU_32K
IC-PMU-MT6323-MTK
VEMC_3V3_PMU
CS48 470nF
CS45 100nF
RS54 1K
CS46 100nF
CS44 22uF
CS42 18pF
CS43 18pF
RS23 NC

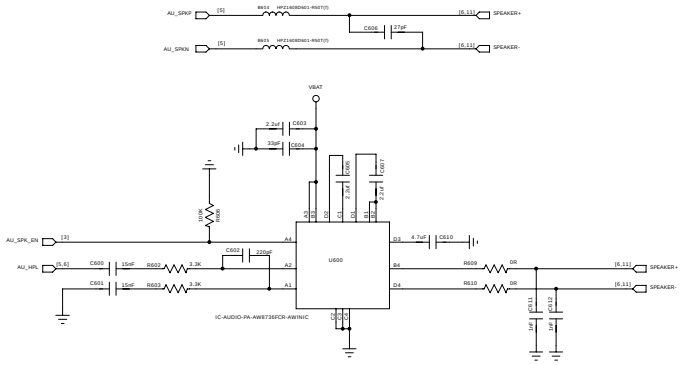
AU_SPKP
AU_SPKN
SPEAKER+
SPEAKER-
VBAT
AU_SPK_EN
AU_HPL
U600
IC-AUDIO-PA-AW8736FCR-AWINIC

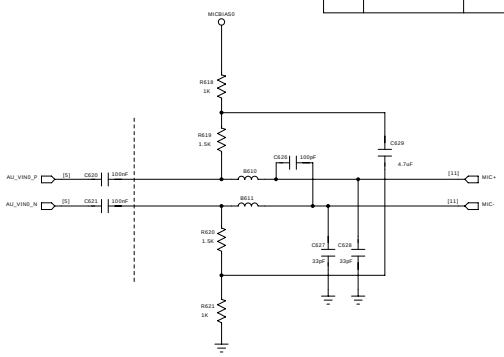
MICBIAS0
AU_VIN0_P
AU_VIN0_N
MIC+
MIC-

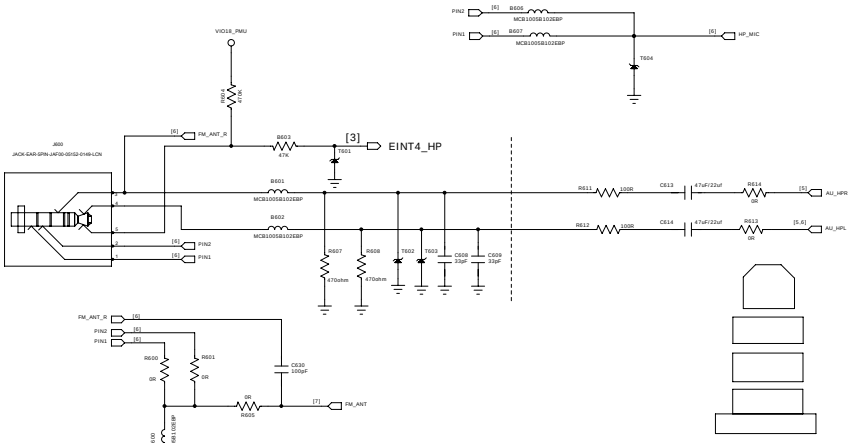
VIO18_PMU
J600
JACK-EAR-SPIN-JAF00-0S0S2-0169-LCN
FM_ANT_R
EINT4_HP
PIN2
PIN1
HP_MIC
AU_HPR
AU_HPL
FM_ANT
FM_RX_N_6572

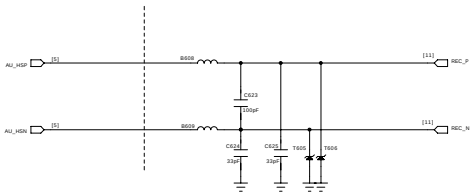
AU_HSP
AU_HSN
REC_P
REC_N

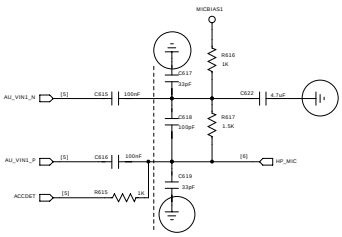
MICBIAS1
AU_VIN1_N
AU_VIN1_P
ACCDET
HP_MIC

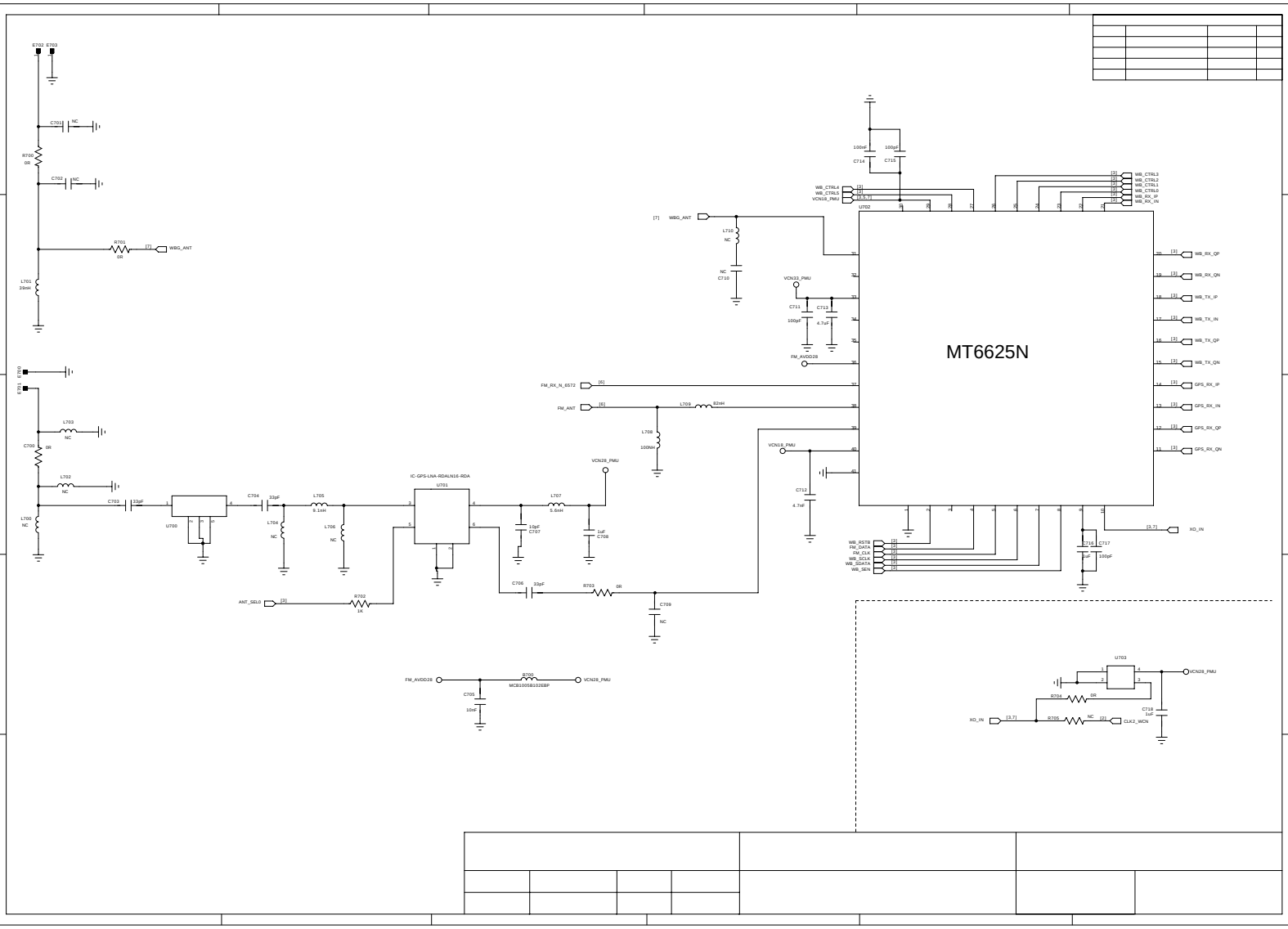
MT6625N
U702
U701
U700
U703
IC-GPS-LNA-RDALN16-RDA
WBG_ANT
FM_RX_N_6572
FM_ANT
XO_IN
VCN33_PMU
VCN18_PMU
VCN28_PMU
FM_AVDD28
ANT_SELO
WB_CTRL3
WB_CTRL2
WB_CTRL1
WB_CTRL0
WB_RX_IP
WB_RX_IN
WB_RX_QP
WB_RX_QN
WB_TX_IP
WB_TX_IN
WB_TX_QP
WB_TX_QN
GPS_RX_IP
GPS_RX_IN
GPS_RX_QP
GPS_RX_QN
WB_RST0
FM_DATA
FM_CLK
WB_SCLK
WB_SDATA
WB_SEN
CLK2_WCN
MC81005B102EBP

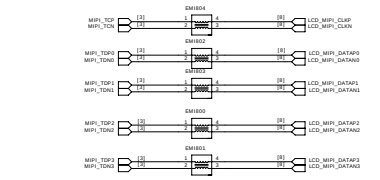
EMI804
MIPI_TDF0
MIPI_TDN0
LCD_MIPI_CLKP
LCD_MIPI_CLKN
EMI802
MIPI_TDF3
MIPI_TDN3
LCD_MIPI_DATAP0
LCD_MIPI_DATAN0
EMI803
MIPI_TDF1
MIPI_TDN1
LCD_MIPI_DATAP1
LCD_MIPI_DATAN1
EMI800
MIPI_TDF2
MIPI_TDN2
LCD_MIPI_DATAP2
LCD_MIPI_DATAN2
EMI801
MIPI_TDF3
MIPI_TDN3
LCD_MIPI_DATAP3
LCD_MIPI_DATAN3

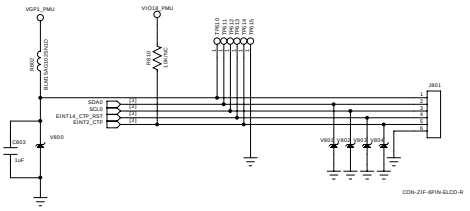
VGP1_PMU
VIO18_PMU
PMU_0
PMU_1
PMU_12
PMU_13
PMU_14
PMU_15
R800
BLM15AG102SN1D
R801
1K
SDA0
SCL0
EINT14_CTP_RST
EINT2_CTP
J801
C803
1uF
V800
V801
V802
V803
V804
CON-ZIF-6PIN-ELCO-R

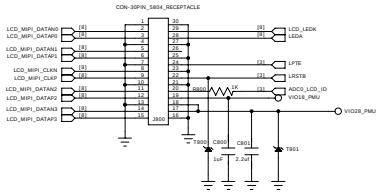
CON-30PIN_5804_RECEPTACLE
LCD_MIPI_DATAN0
LCD_MIPI_DATAP0
LCD_MIPI_DATAN1
LCD_MIPI_DATAP1
LCD_MIPI_CLKN
LCD_MIPI_CLKP
LCD_MIPI_DATAN2
LCD_MIPI_DATAP2
LCD_MIPI_DATAN3
LCD_MIPI_DATAP3
LCD_LEDK
LEDA
LPTE
LRSTB
ADC3_LCD_ID
VIO18_PMU
VIO28_PMU
R800
1K
J800
T800
C800
1uF
C801
2.2uF
T801

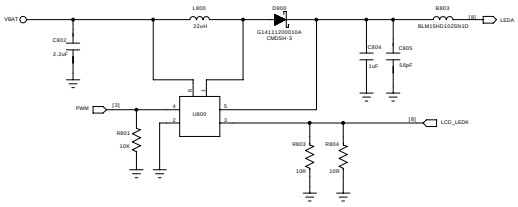
VBAT
C802
2.2uF
L800
22uH
D800
G141112D0010A
CMDSH-3
R803
BLM15HD102SN1D
LEDA
C804
1uF
C805
50pF
PWM
R801
10K
U800
R803
10K
R804
10K
LCD_LEDK

VIO18_PMU

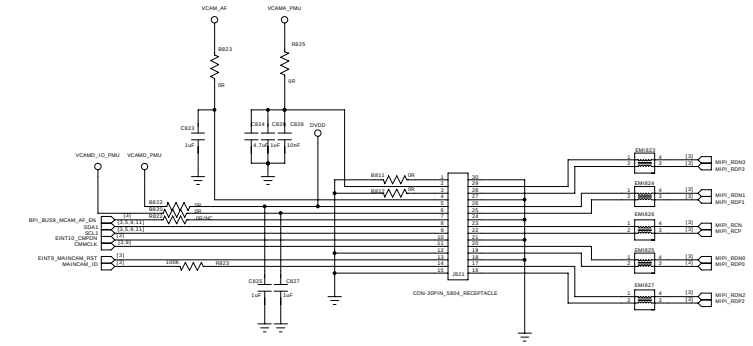
VCAM_AF
VCAMA_PMU
R823
0R
R825
0R
C823
1uF
C824
4.7uF
C826
1uF
C828
10nF
DVDD
VCAMD_IO_PMU
VCAMD_PMU
R822
0R
R820
0R
R827
0R/NC
BPI_BUS9_MCAM_AF_EN
SDA1
SCL1
EINT10_CMPDN
CMMCLK
EINT9_MAINCAM_RST
MAINCAM_PD
R823
100K
C825
1uF
C827
1uF
R811
0R
R824
0R
J821
CON-30PIN_5804_RECEPTACLE
EMI821
EMI824
EMI826
EMI825
EMI827
MIPI_RDN3
MIPI_RDP3
MIPI_RDN1
MIPI_RDP1
MIPI_RCN
MIPI_RCP
MIPI_RDN0
MIPI_RDP0
MIPI_RDN2
MIPI_RDP2

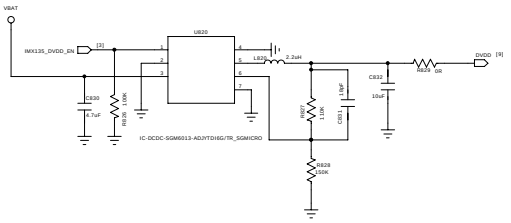
VBAT
IMX135_DVDD_EN
U820
L820
2.2uH
DVDD
R828
0R
C830
4.7uF
R830
1.00K
R829
110K
C831
1.0nF
C832
10uF
R828
100K
IC-DCDC-SGM6013-ADJYTDI6G/TR_SGMICRO

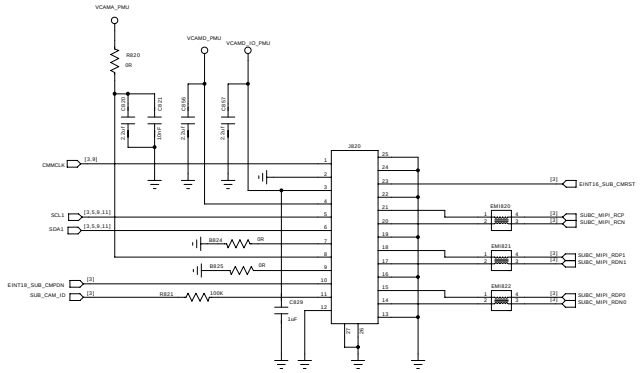
VCAMA_PMU
R820
0R
VCAMD_PMU
VCAMD_IO_PMU
C816
2.2uF
C813
0nF
C816
2.2uF
C817
2.2uF
CMMCLK
SCL1
SDA1
EINT18_SUB_CMPDN
SUB_CAM_ID
R824
0R
R825
0R
R821
100K
C829
1uF
J820
EINT16_SUB_CMRST
EMI820
EMI821
EMI822
SUBC_MIPI_RCP
SUBC_MIPI_RCN
SUBC_MIPI_RDP1
SUBC_MIPI_RDN1
SUBC_MIPI_RDP0
SUBC_MIPI_RDN0

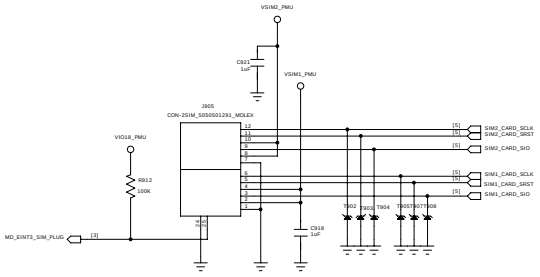
VSIM2_PMU
C921
1uF
VSIM1_PMU
J905
CON-2SIM_505501291_MOLEX
VIO18_PMU
R912
100K
MD_EINT3_SIM_PLUG
[3]
C918
1uF
T902
T903
T904
T905
T907
T908
[5]
SIM2_CARD_SCLK
SIM2_CARD_SRST
SIM2_CARD_SIO
SIM1_CARD_SCLK
SIM1_CARD_SRST
SIM1_CARD_SIO

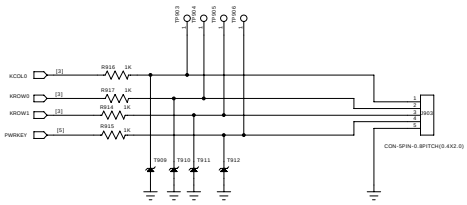
T913
T914
T915
T916
KCOL0
KROW0
KROW1
PWRKEY
[3]
[5]
R916 1K
R917 1K
R918 1K
R915 1K
T909
T910
T911
T912
J903
CON-SPIN-0.8PITCH(0.4X2.0)

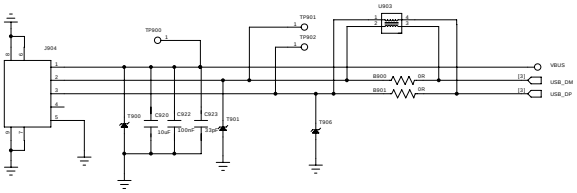
J904
TP900
TP901
TP902
U903
R800 0R
R801 0R
VBUS
USB_DM
USB_DP
[3]
T900
C920
10uF
C922
100nF
C923
33pF
T901
T906

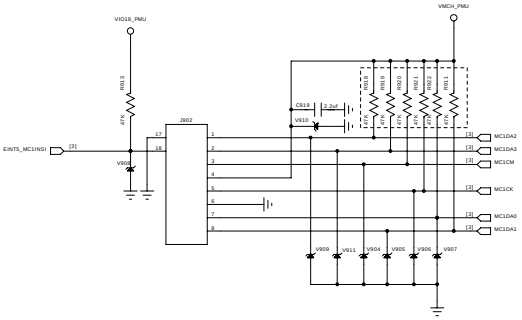
VMCH_PMU
VIO18_PMU
R913 47K
EINT5_MC1INSI
[3]
V908
J902
C919 2.2uf
V910
R914 47K
R919 47K
R921 47K
R920 47K
R911 47K
MC1DA2
MC1DA3
MC1CM
MC1CK
MC1DA0
MC1DA1
V909
V911
V904
V905
V906
V907

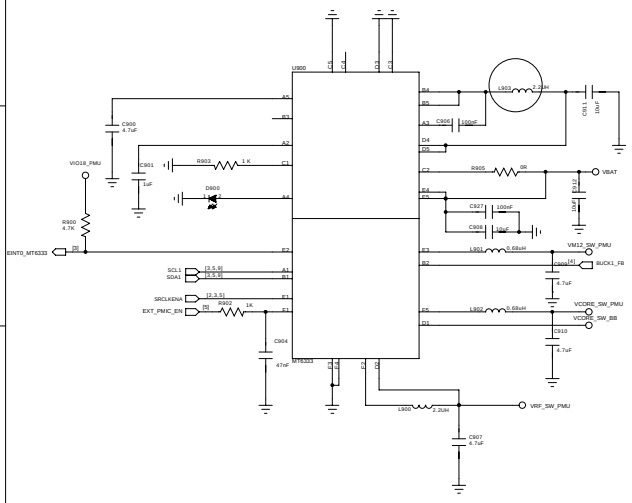

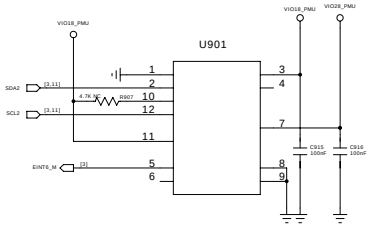
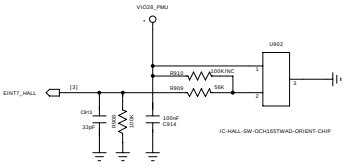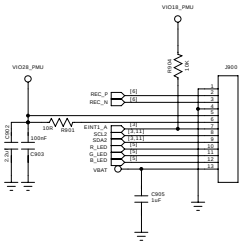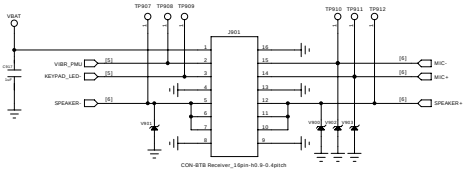
IC-ACCELEROMETER-BMA250-BOSCH