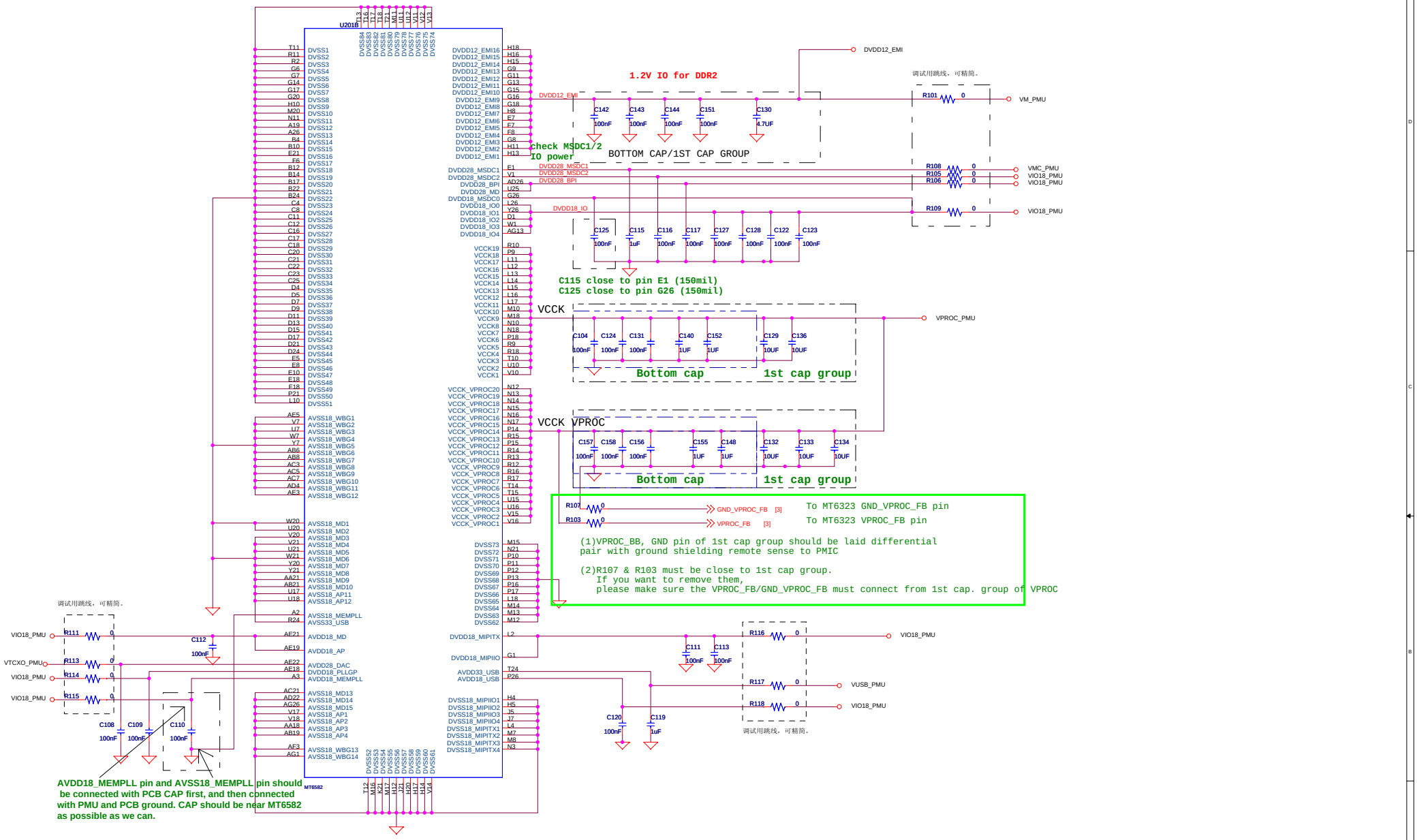

Amoi Technology Co., Ltd.
22 GuanRi Road, Software Park II,
Siming District, Xiamen,Fujian 361000,
China
www.amoi.com.cn

Title MT6582 REF PHONE

Size	Sheet Name	Rev
C	BB- Power	1.2

ENGINEER: Name

Date: Tuesday, September 24, 2013 | Sheet 1 of 14

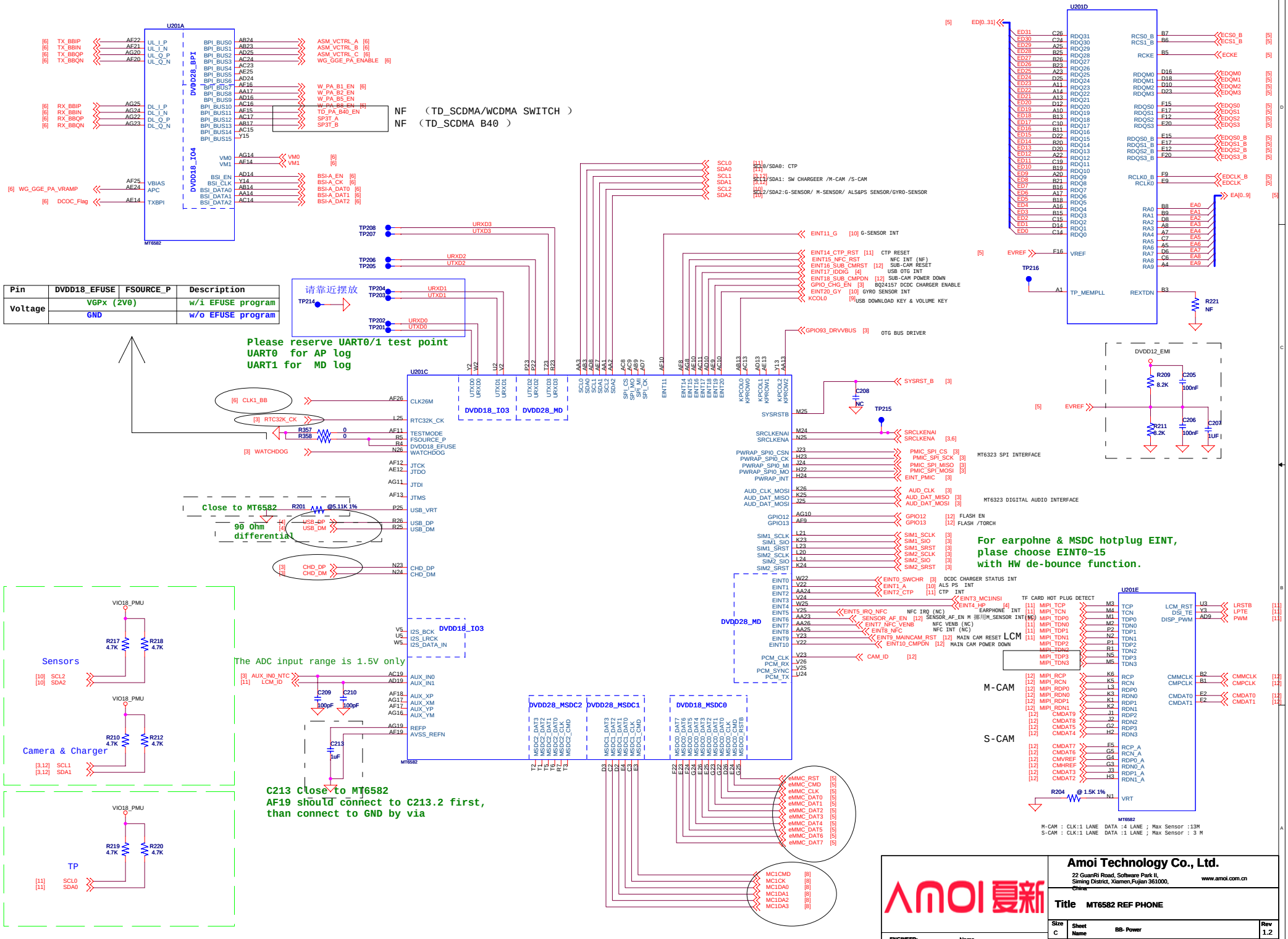

Pin	DVDD18_EFUSE	FSOURCE_P	Description
Voltage	VGPx (2V0)		w/i EFUSE program
	GND		w/o EFUSE program

Amoi Technology Co., Ltd.
22 GuanRi Road, Software Park II,
Siming District, Xiamen,Fujian 361000,
China
www.amoi.com.cn

Title MT6582 REF PHONE

Size	Sheet Name	Rev
C	BB- Power	1.2

ENGINEER: Name

Date: Tuesday, September 10, 2013 | Sheet 2 of 14

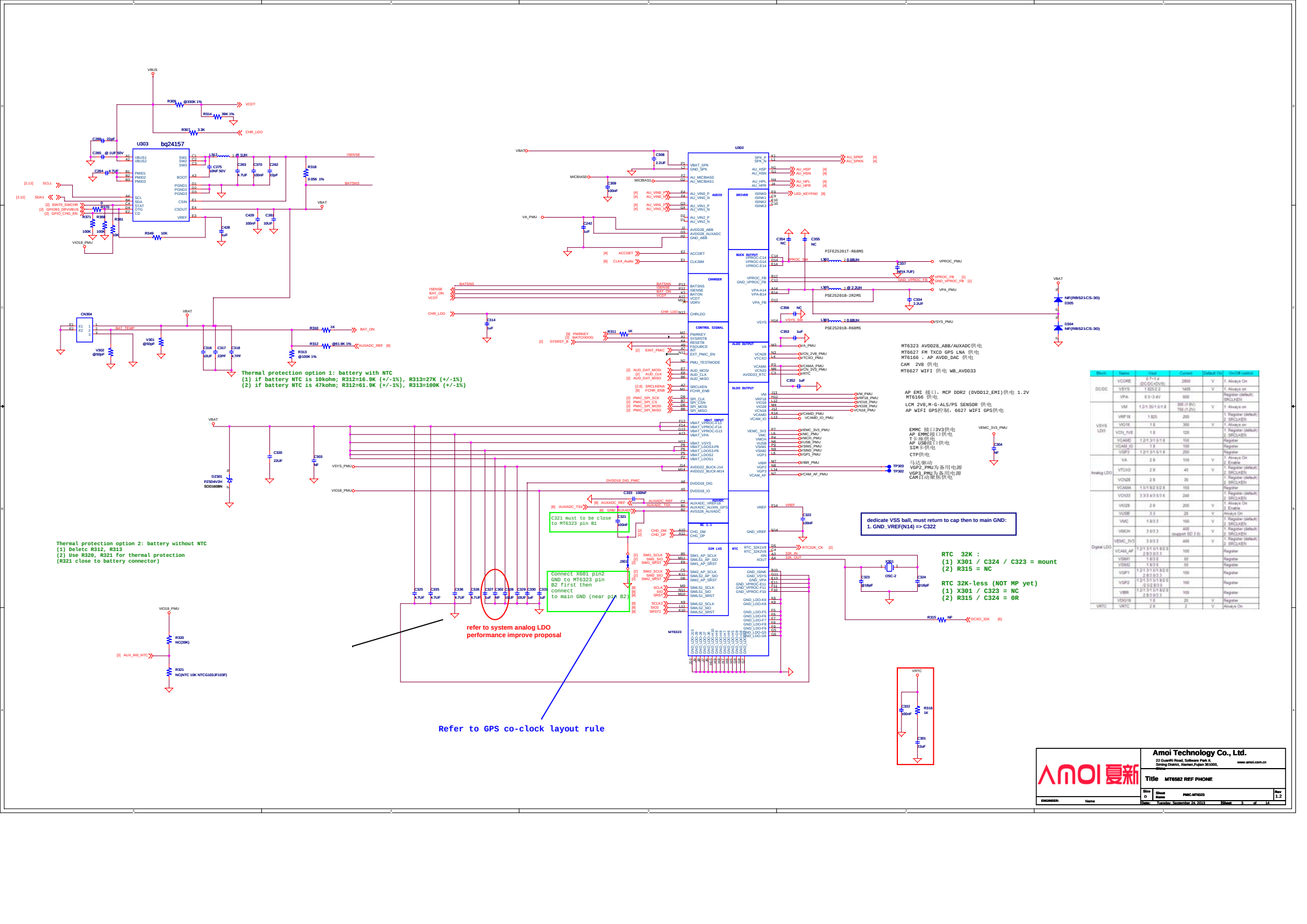

Block	Name	Vset	Current	Default On	On/Off control
DC/DC	VCORE	0.7~1.4 (DC/DC+DVS)	2800	V	1. Always On
	VSYS	1.825~2.2	1400	V	1. Always on
	VPA	0.5~3.4V	600		Register (default) 2. SRCLKEN
VSYS LDO	VM	1.2/1.35/1.5/1.8	300 (1.8V) 700 (1.2V)	V	1. Always on
	VRF18	1.825	200		1. Register (default) 2. SRCLKEN
	VIO18	1.8	300	V	1. Always on
	VCN_1V8	1.8	120		1. Register (default) 2. SRCLKEN
	VCAM0	1.2/1.3/1.5/1.8	150		Register
	VCAM_IO	1.8	100		Register
	VGP3	1.2/1.3/1.5/1.8	200		Register
Analog LDO	VA	2.8	150	V	1. Always On 2. Enable
	VTCXO	2.8	40	V	1. Register (default) 2. SRCLKEN
	VCN28	2.8	30		1. Register (default) 2. SRCLKEN
	VCAMA	1.5/1.8/2.5/2.8	150		Register
	VCN33	3.3/3.4/3.5/3.6	240		1. Register (default) 2. SRCLKEN
Digital LDO	VIO28	2.8	200	V	1. Always On 2. Enable
	VUSB	3.3	20	V	Always On
	VMC	1.8/3.3	100	V	1. Register (default) 2. SRCLKEN
	VMCH	3.0/3.3	400 (support SD 3.0)	V	1. Register (default) 2. SRCLKEN
	VEMC_3V3	3.0/3.3	400	V	1. Register (default) 2. SRCLKEN
	VCAM_AF	1.2/1.3/1.5/1.8/2.0/2.8/3.0/3.3	100		Register
	VSIM1	1.8/3.0	50		Register
	VSIM2	1.8/3.0	50		Register
	VGP1	1.2/1.3/1.5/1.8/2.0/2.8/3.0/3.3	100		Register
	VGP2	1.2/1.3/1.5/1.8/2.0/2.8/3.0/3.3	100		Register
	VIBR	1.2/1.3/1.5/1.8/2.0/2.8/3.0/3.3	100		Register
	VDIG18	1.8	20	V	Register
VRTC	VRTC	2.8	2	V	Always On

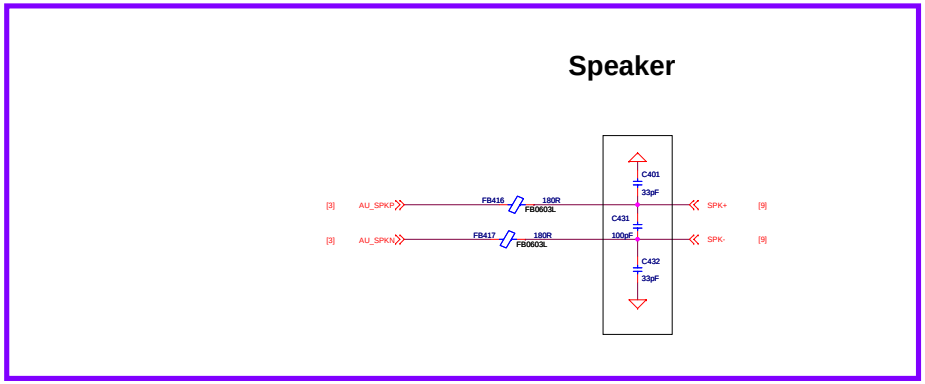

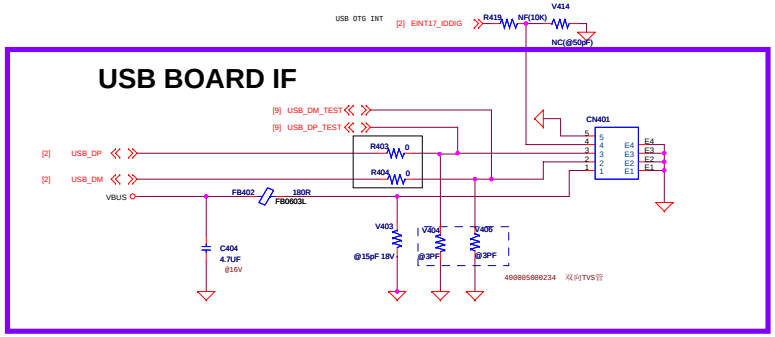

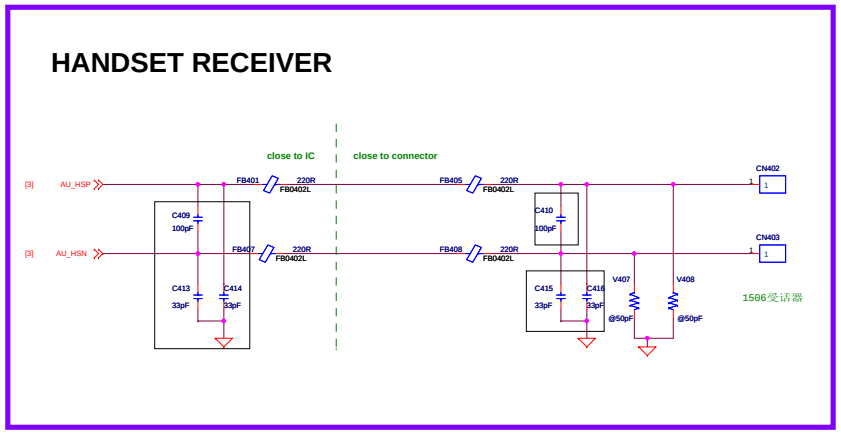

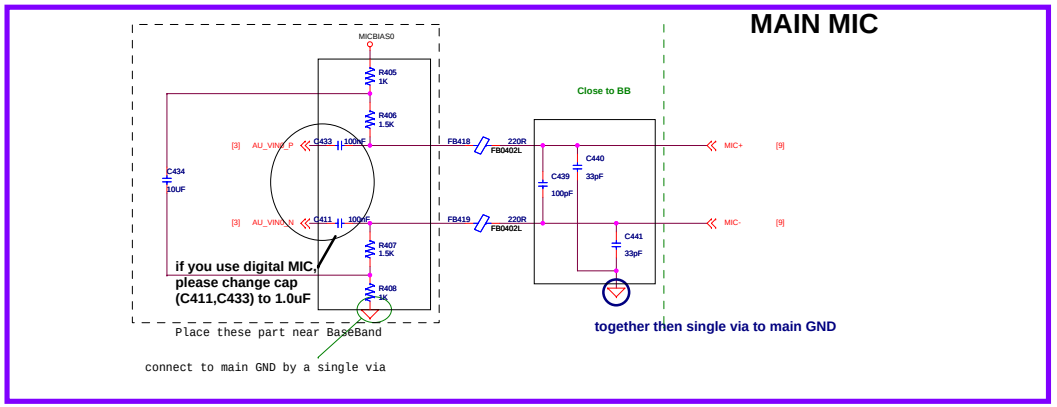

Earphone RECEIVER

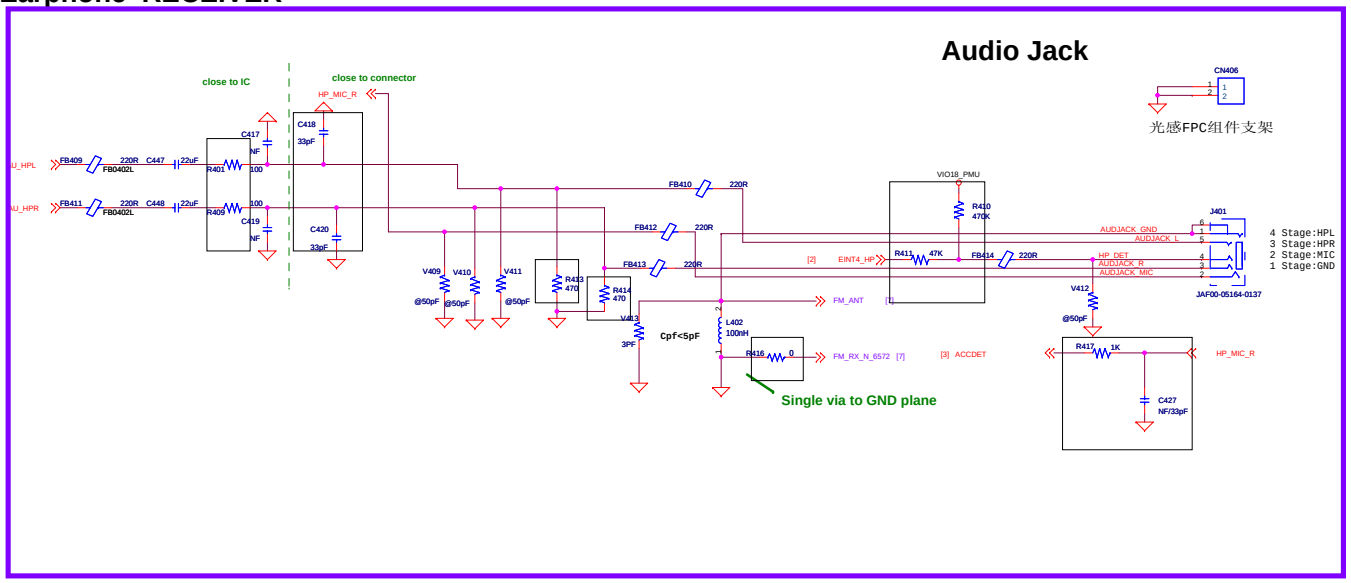

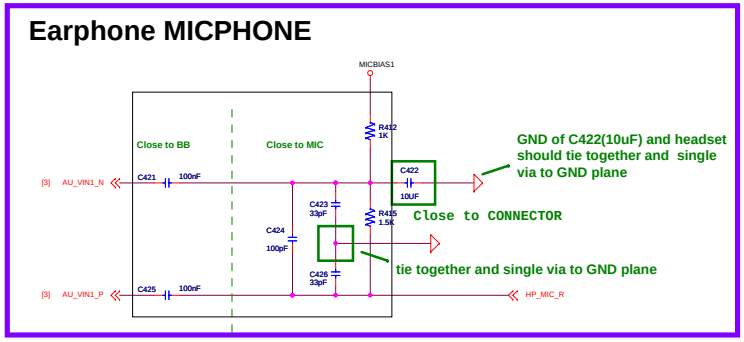

Amoi Technology Co., Ltd.
22 GuanRi Road, Software Park II, Siming District, Xiamen,Fujian 361000, China
www.amoi.com.cn

Title MT6582 REF PHONE

Size | Sheet Name: Audio & USB | Rev 1.2

ENGINEER: Name

Date: Monday, September 09, 2013 | Sheet 4 of 14

MCP LPDDR2

S4B VDD1=1.8V,VDD2=1.20V,VDDCA,VDDQ= 1.20V

Reference Pin for Output Drive Strength Calibration

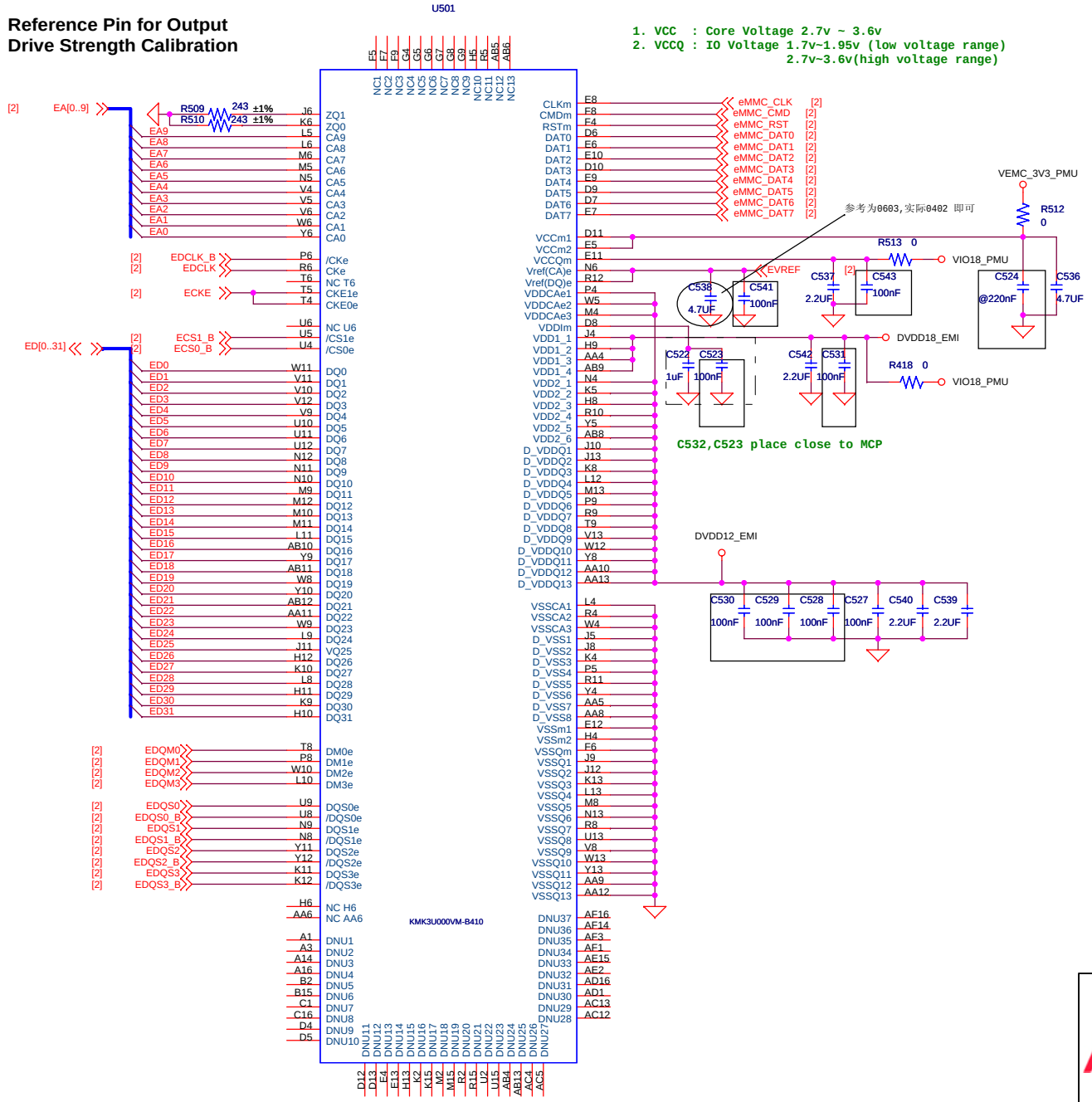

Amoi Technology Co., Ltd. 22 GuanRi Road, Software Park II, Siming District, Xiamen,Fujian 361000, China www.amoi.com.cn		
Title MT6582 REF PHONE		
Size A3	Sheet Name EMMC+DDR2	Rev 1.2
ENGINEER: Name	Date: Tuesday, September 24, 2013	Sheet 5 of 14

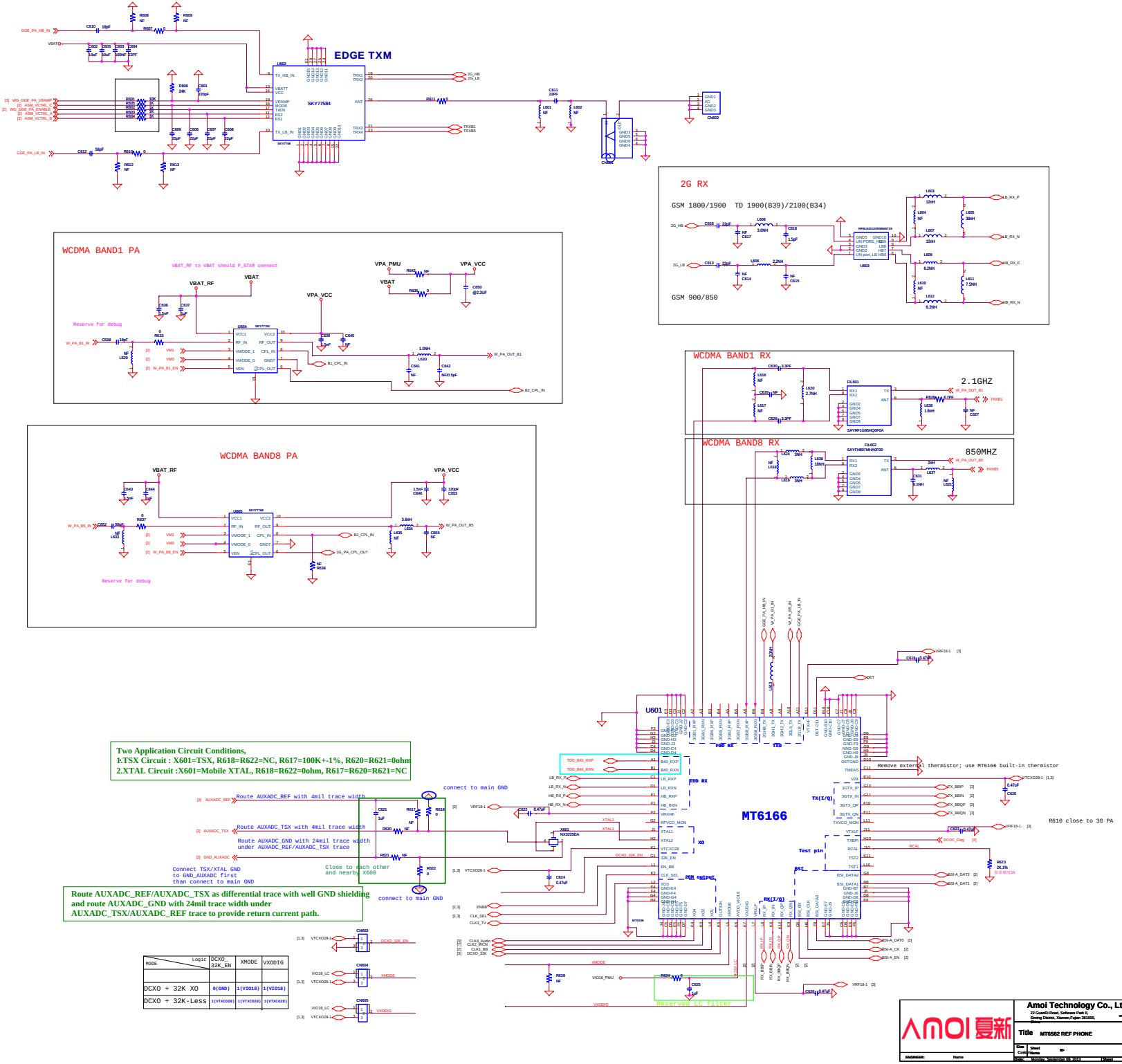

MODE	Logic	DCXO_32K_EN	XMODE	VXODIG
DCXO + 32K XO		0(GND)	1(VIO18)	1(VIO18)
DCXO + 32K-Less		1(VTXCO28)	1(VTXCO28)	1(VTXCO28)

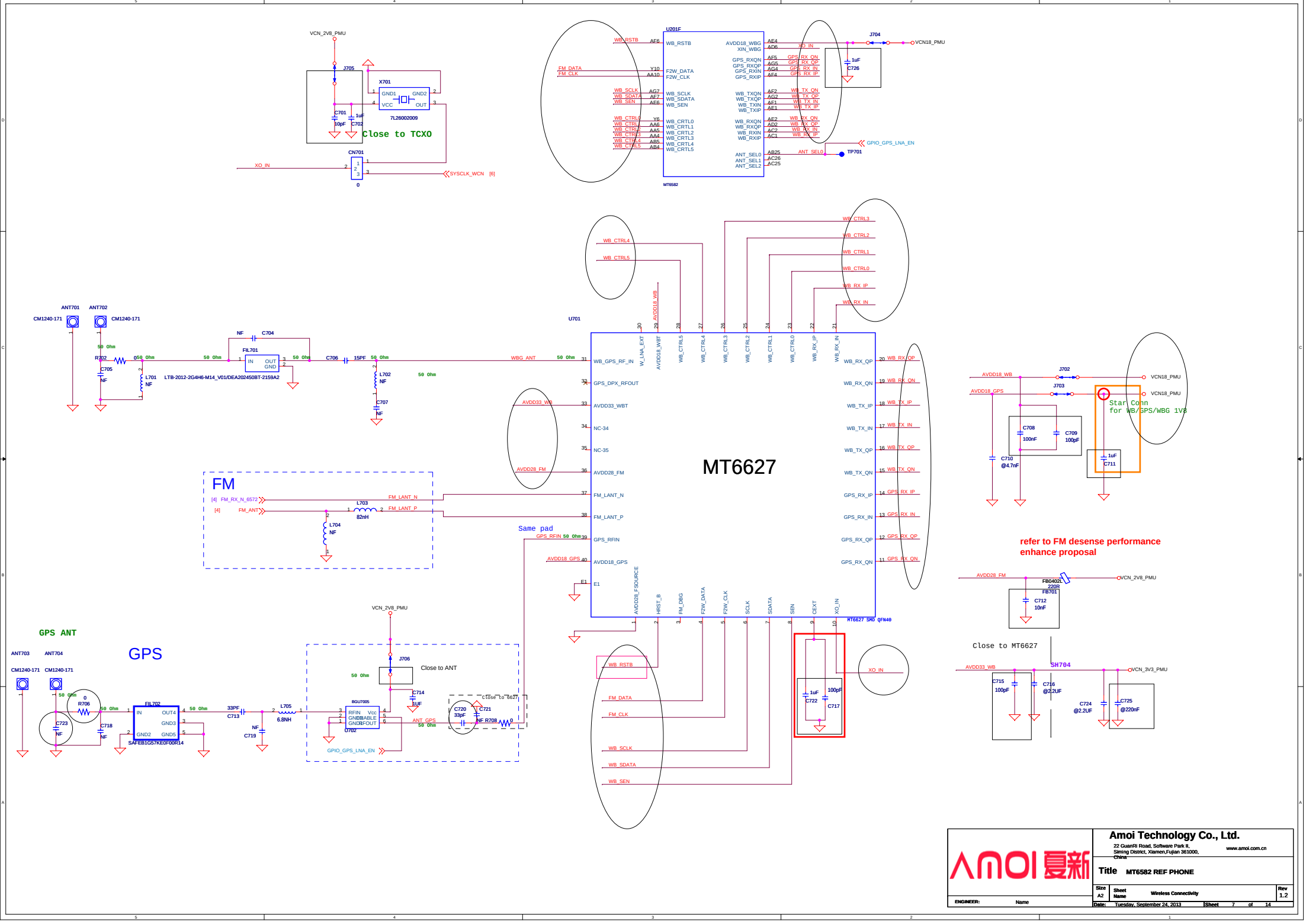

AMOI 夏新	**Amoi Technology Co., Ltd.** 22 GuanRi Road, Software Park II, Siming District, Xiamen,Fujian 361000, China www.amoi.com.cn	
	Title: MT6582 REF PHONE	
ENGINEER: Name	Size A2 / Sheet Name: Wireless Connectivity	Rev 1.2
	Date: Tuesday, September 24, 2013	Sheet 7 of 14

SIM1 SIM2

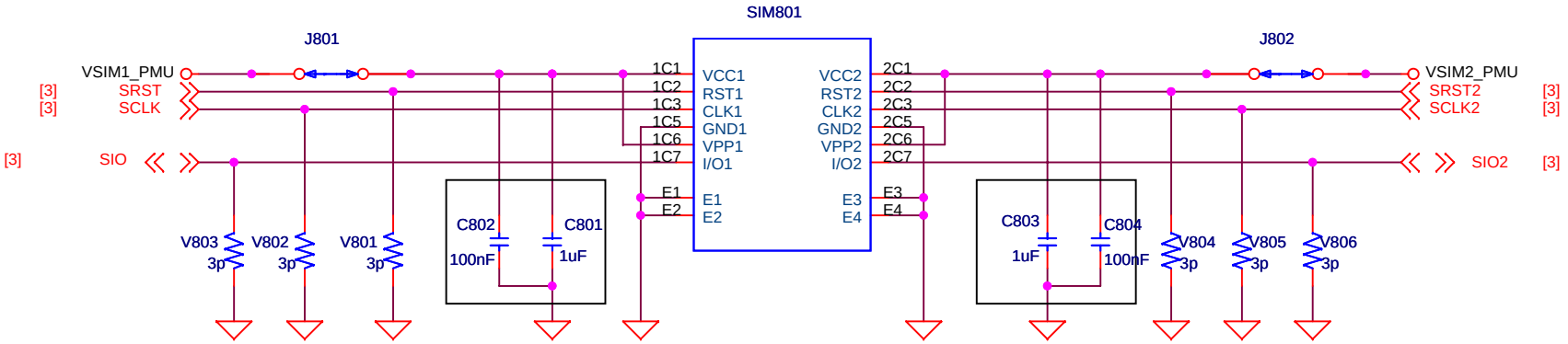

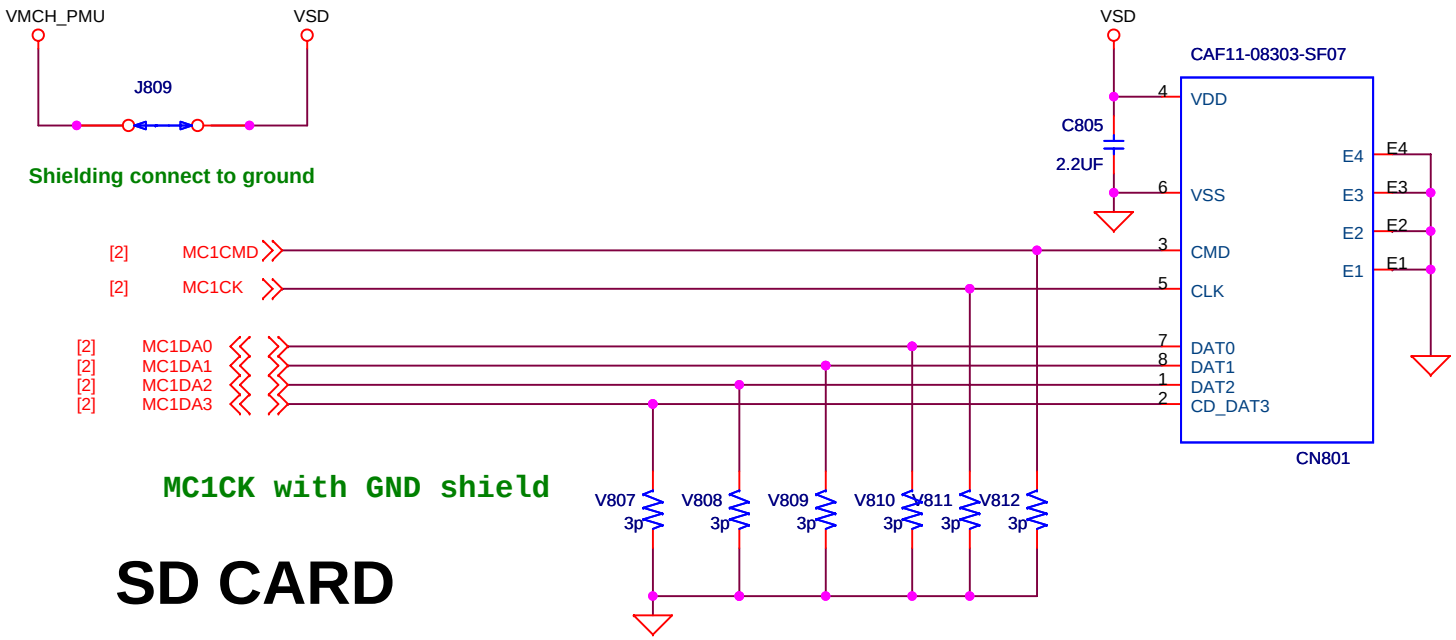

SD CARD

ENGINEER: Name	**Amoi Technology Co., Ltd.** 22 GuanRi Road, Software Park II, Siming District, Xiamen,Fujian 361000, China www.amoi.com.cn	
	Title MT6582 REF PHONE	
	Size A4 / Sheet Name T card & USIM	Rev 1.2
	Date: Monday, September 09, 2013	Sheet 8 of 14

Key

Power Key

DO NOT put pull-up resistor on PWRKEY

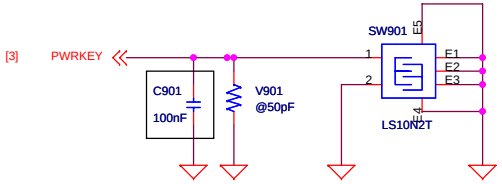

Download Mode : Volume Up
Factory Mode: Volume Down + Power Key

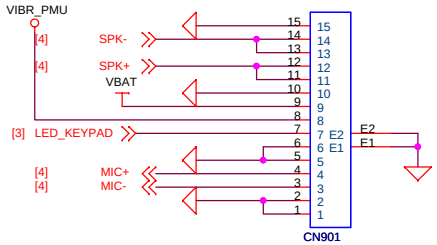

MP Test Points

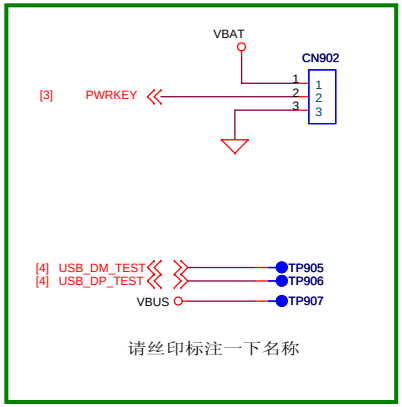

VBAT （TP901)及GND(TP908) 测试点用于RF校准
主板功能测试的馈电点，为共用N828夹具。布局坐标同N828。

Volume Up

USB Download Mode

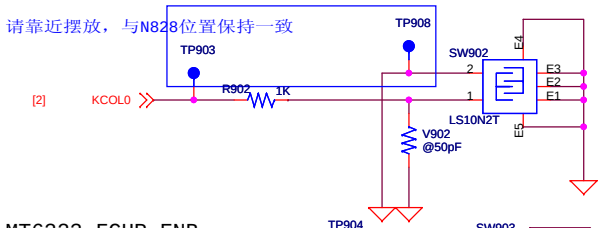

Notice :
1. Due to KCOL0 & KROW0 reset mode = GPIO input mode, "Force USB download mode" will be fail in KCOL0+KROW0. So we change VolumeUp key=KCOL0+GND
2. Keypad matrix will become as (KEY1=KCOL0+GND)

MT6323 FCHR_ENB

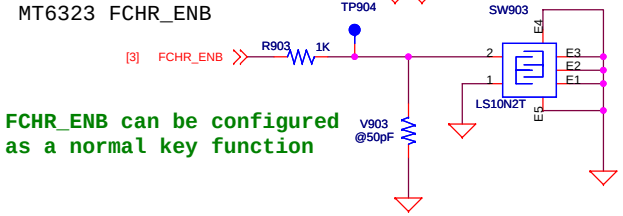

FCHR_ENB can be configured as a normal key function

Notice :
There are 3 options for "Long press to shutdown" function
1.PWRKEY + FCHR_ENB
2.PWERKEY only
3.FCHR_ENB only

During download mode, defalut = PWRKEY + FCHR_ENB
For other case (exclude download mode), defalut = PWERKEY only

Volume Down

ENGINEER: Name	Amoi Technology Co., Ltd. 22 GuanRi Road, Software Park II, Siming District, Xiamen,Fujian 361000, China www.amoi.com.cn		
	Title MT6582 REF PHONE		
	Size A3	Sheet Name KEY & CONNENCT	Rev 1.2
	Date: Monday, September 09, 2013	Sheet 9 of 14	

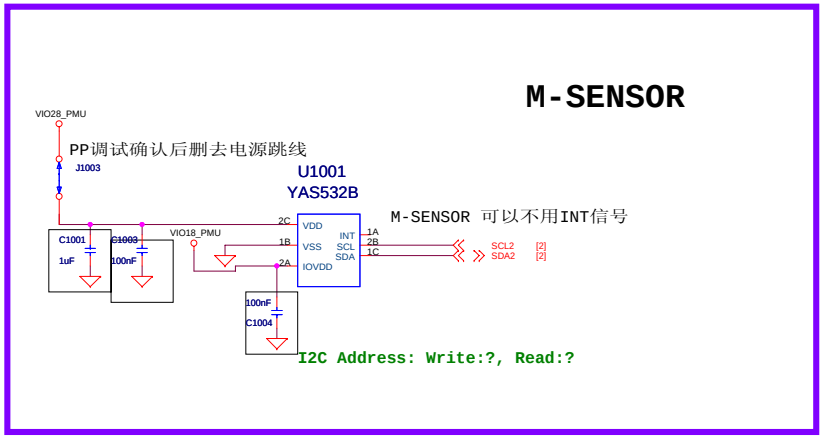

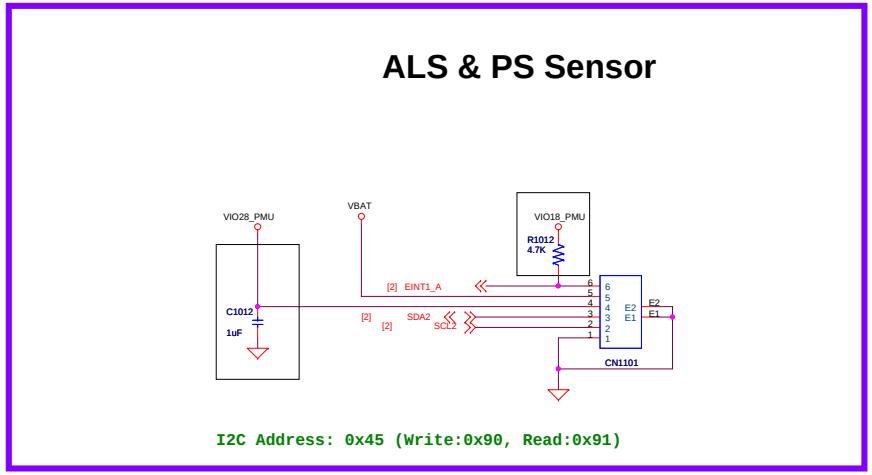

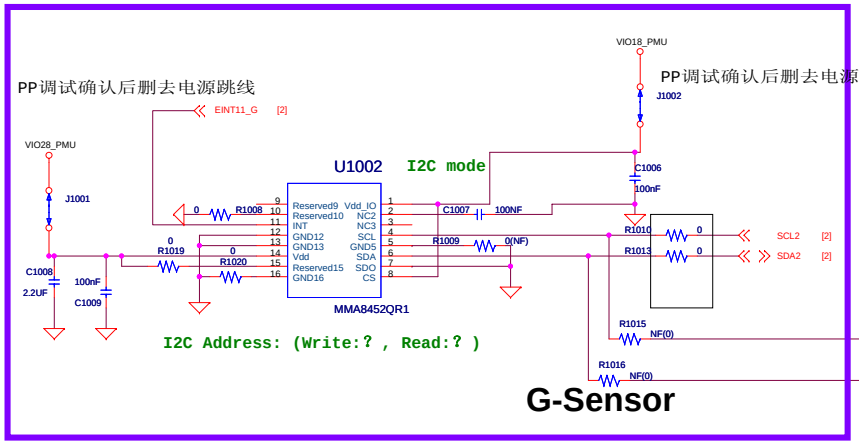

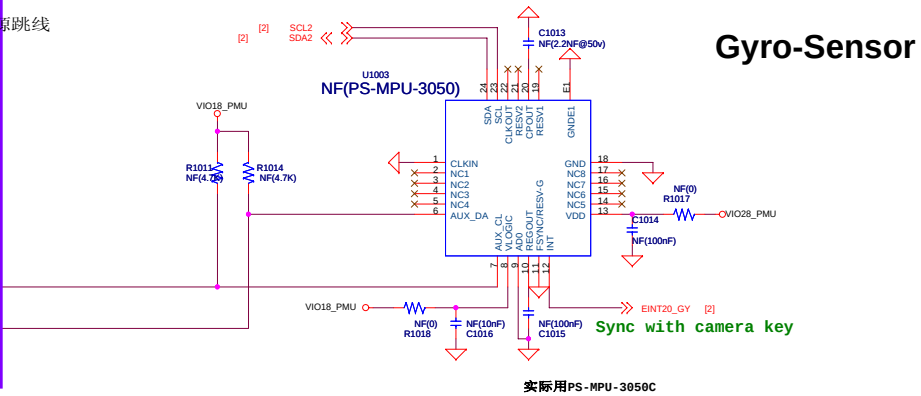

ENGINEER: Name	**Amoi Technology Co., Ltd.** 22 GuanRi Road, Software Park II, Siming District, Xiamen,Fujian 361000, China www.amoi.com.cn	
	Title MT6582 REF PHONE	
	Size C / Sheet Name PMIC-MT6323	Rev 1.2
	Date: Wednesday, September 11, 2013	Sheet 10 of 14

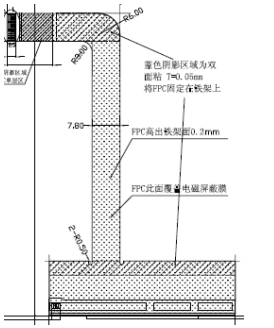

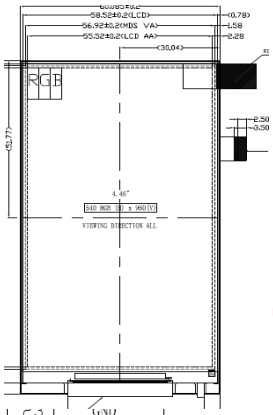

24	LED+
25	GND

2V8 100mA

LCM VDD 2V8 耗电约40mA以内

1V8 100mA

LCM VDDIO 1V8 耗电约10mA以内

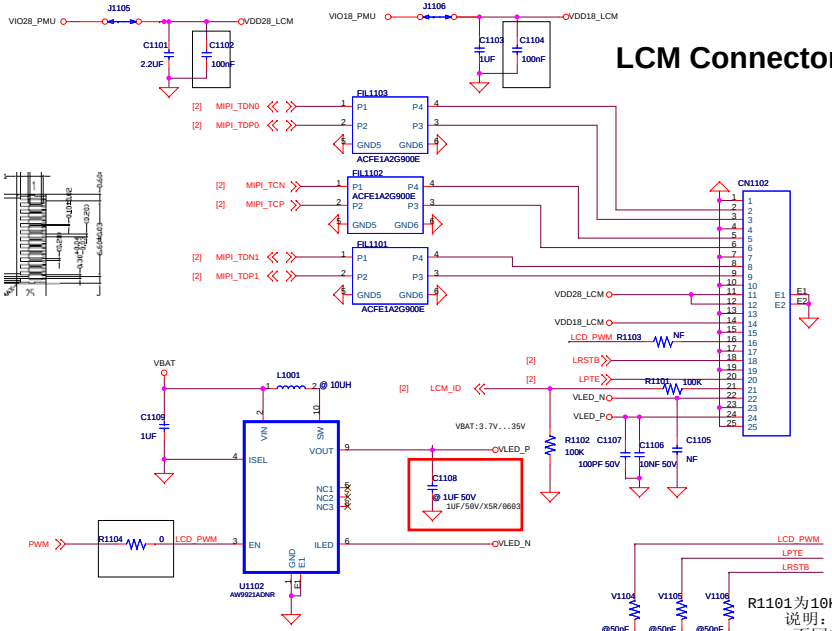

LCM Connector

No.	Pad Name
1	GND
2	DSI-D0N
3	DSI-D0P
4	GND
5	DSI_CLKN
6	DSI_CLKP
7	GND
8	DSI_D1N
9	DSI_D1P
10	GND
11	VDD2(2.8V)
12	VDD3(2.8V)
13	GND
14	VDD1(1.8V/2.8V)
15	GND
16	LEDPWM
17	GND
18	RESET
19	GND
20	TE
21	LCD_ID(1.8V)
22	LED-
23	GND
24	LED+
25	GND

R1101为10K （0402）;R1102为47K （0402）;
说明：电压匹配电路使得 LCM_ID电压值小于1.5V 。
不同的LCM 需要在其FPC内电路上设置不同
的电阻（接1.8V),以使LCM_ID得到不同分压值，区分LCM。

Capacitive Touch Panel COB

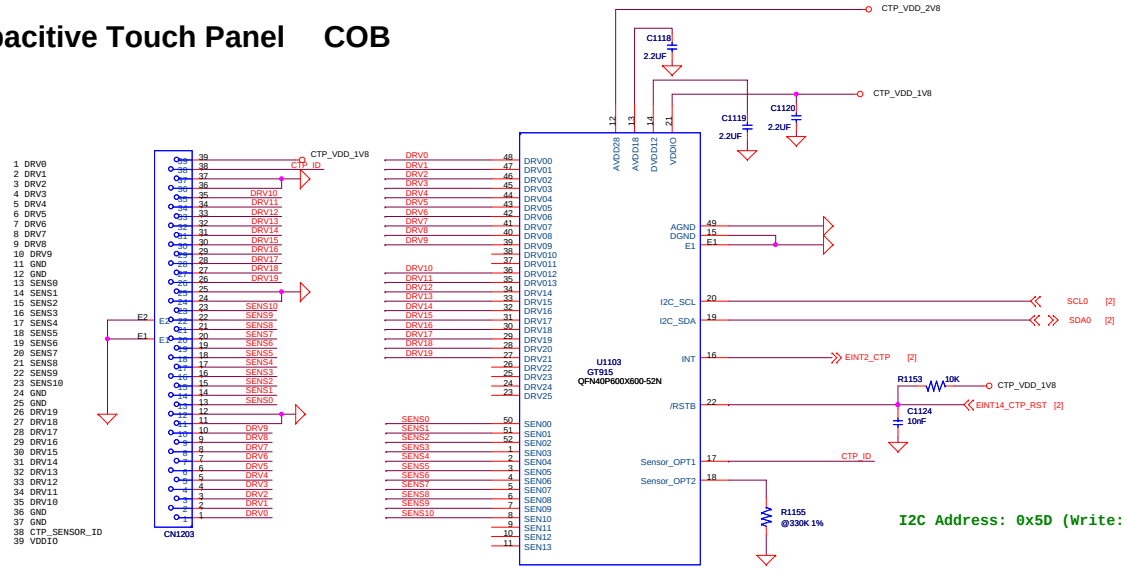

I2C Address: 0x5D (Write:0xBA, Read:0xBB)

Amoi Technology Co., Ltd.
22 GuanRi Road, Software Park II, Siming District, Xiamen,Fujian 361000, China
www.amoi.com.cn

Title MT6582 REF PHONE

Size	Sheet Name	Rev
A2	LCD, Touch	1.2

ENGINEER: Name

Date: Wednesday, September 11, 2013 Sheet 11 of 14

Main Camera

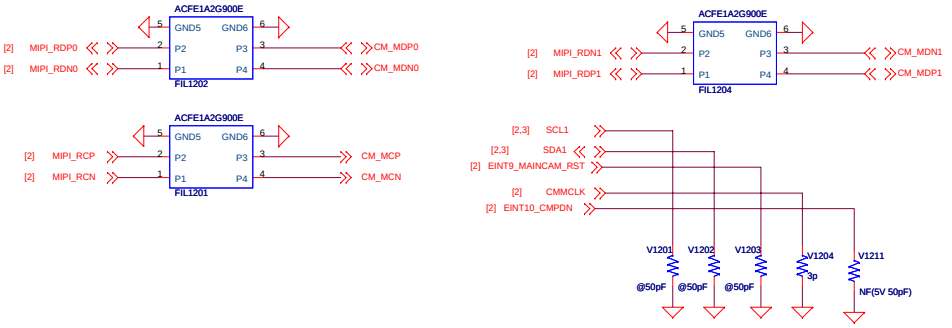

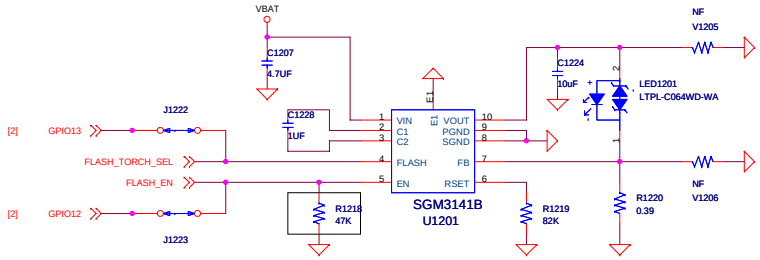

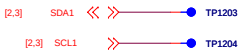

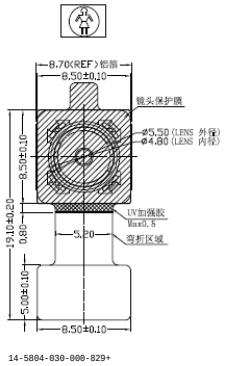

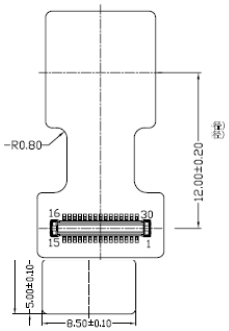

1 DOVDD_1.8V
2 DVDD(NC)
3 SIOC
4 SIOD
5 XCLK
6 AF_EN(NC)
7 AGND
8 AVDD_2.8V
9 PWDN
10 STROBE
11 RESET
12 AF_VDD_2.8V
13 NC
14 NC
15 NC
16 NC
17 NC
18 NC
19 NC
20 DGND
21 D4/MDP1
22 D5/MDN1
23 DGND
24 D6/MCP
25 D7/MCN
26 DGND
27 D8/MDP0
28 D9/MDN0
29 DGND
30 ID

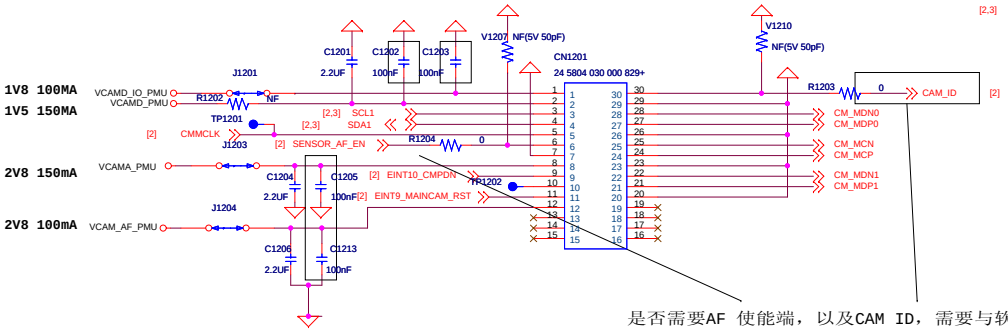

是否需要AF 使能端，以及CAM ID，需要与软件确认

Sub Camera

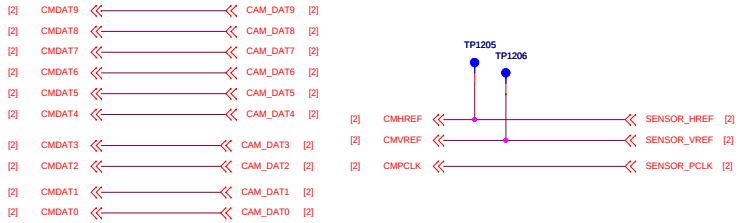

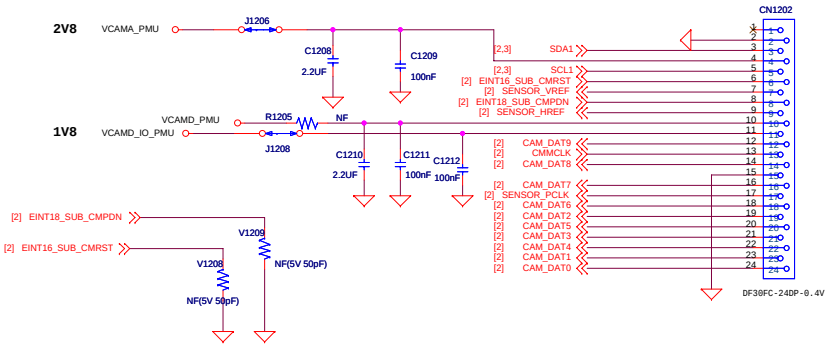

PIN NO	NAME
1	NC
2	AGND
3	SIO_D
4	AVDD 2.8V
5	SIO_C
6	RESET
7	VSYNC
8	PWDN
9	HREF
10	NC
11	DOVDDonly1.8V
12	Y7
13	XCLK
14	Y6
15	DGND
16	Y5
17	PCLK
18	Y4
19	Y0
20	Y3
21	Y1
22	Y2
23	NC
24	NC

TOP VIEW

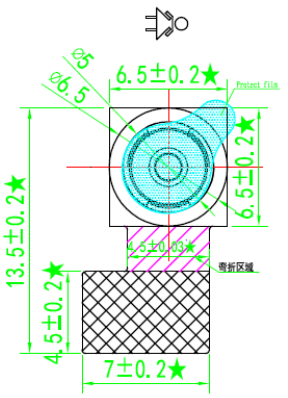

BOTTOM VIEW

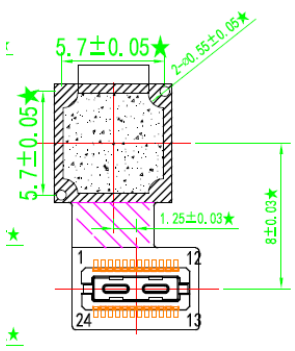

Amoi Technology Co., Ltd.
22 GuanRi Road, Software Park II, Siming District, Xiamen,Fujian 361000, China
www.amoi.com.cn

Title MT6582 REF PHONE

Size	Sheet Name	Rev
C	Camera	1.2

ENGINEER: Name

Date: Tuesday, September 24, 2013 | Sheet 12 of 14