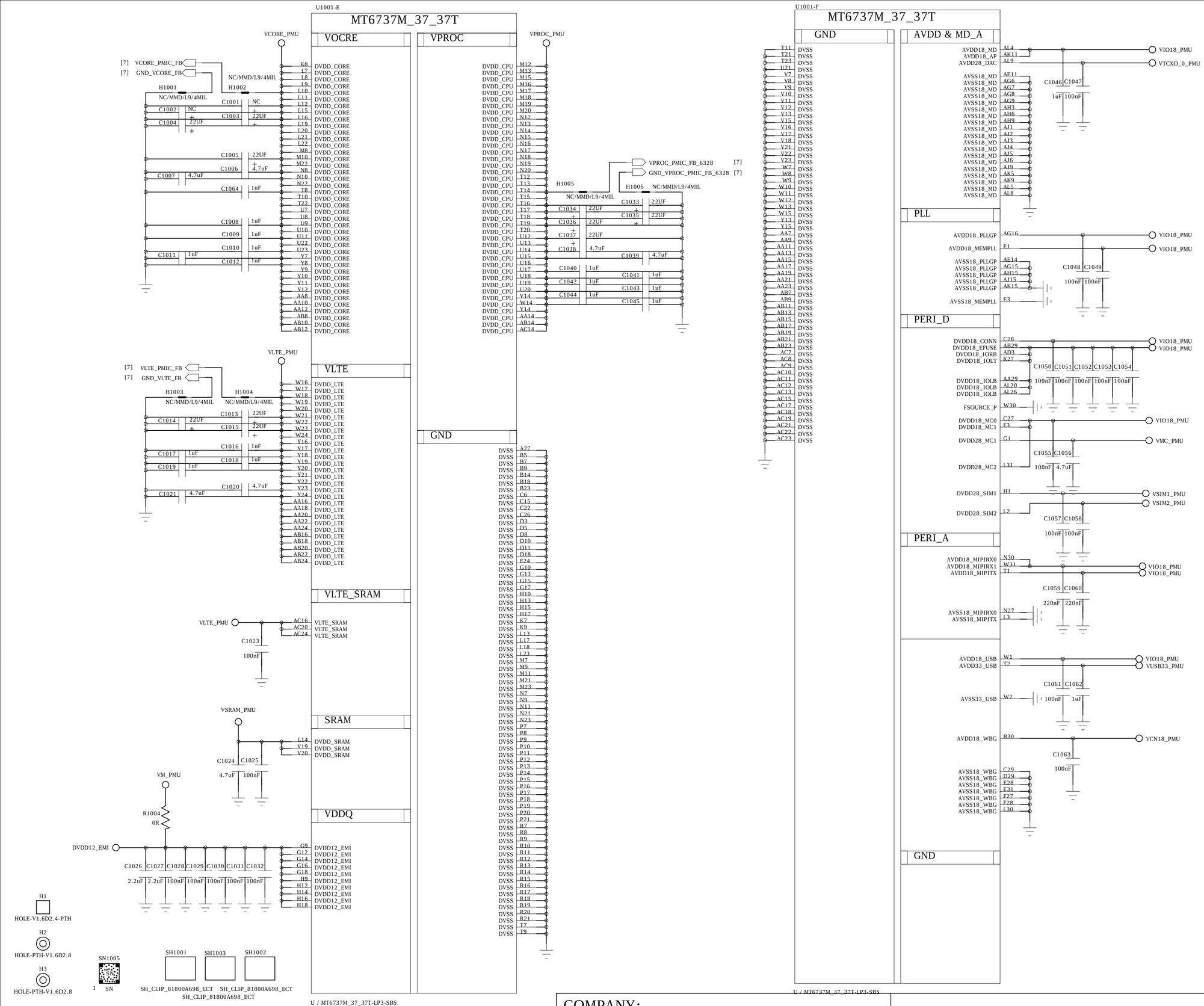

REVISION RECORD			
LTR	ECO NO:	APPROVED:	DATE:

COMPANY: TRANSSION HOLDINGS		MODEL: H371	Modified Date: 2016-6-18
DRAWN LLZ/LX	DATED 20160216	TITLE: 10_BB_POWER	VERSION: V1.1
CHECKED < >	DATED < >		SHEET: 3 OF 23

REVISION RECORD			
LTR	ECO NO:	APPROVED:	DATE:

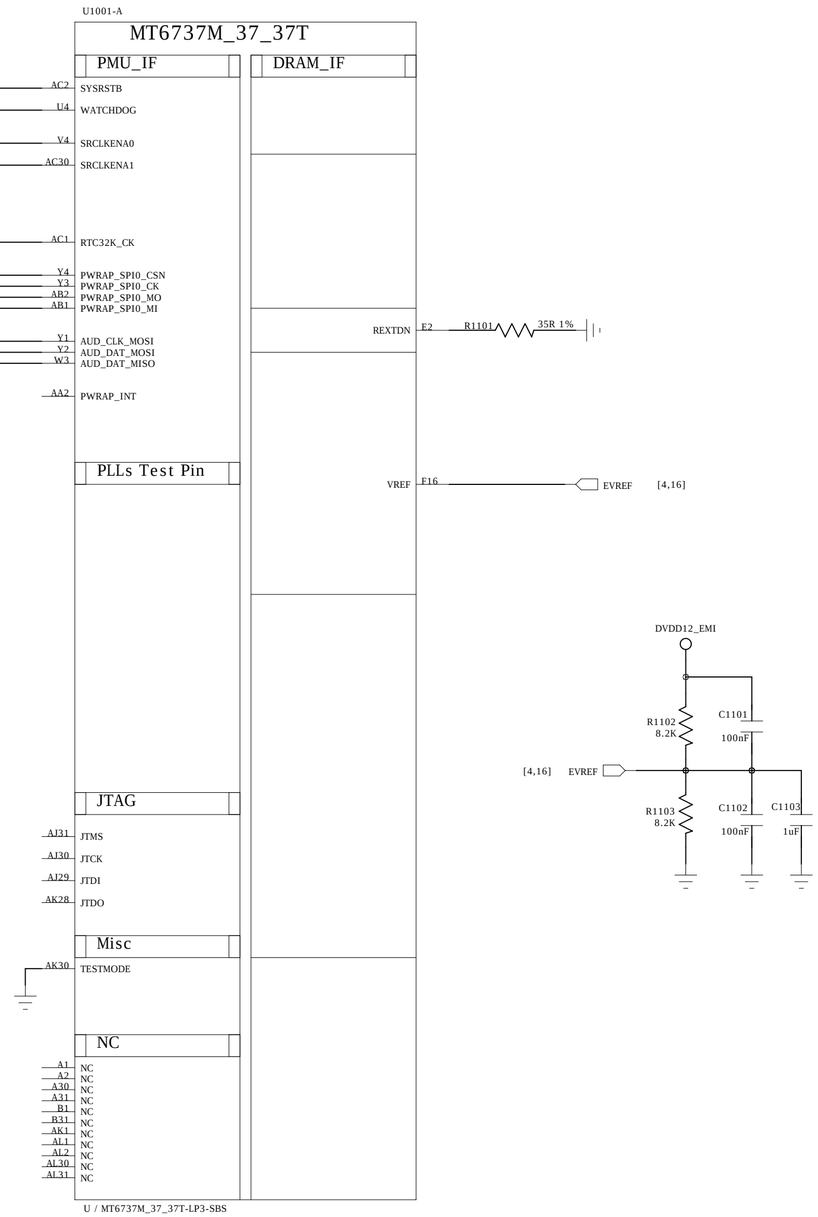

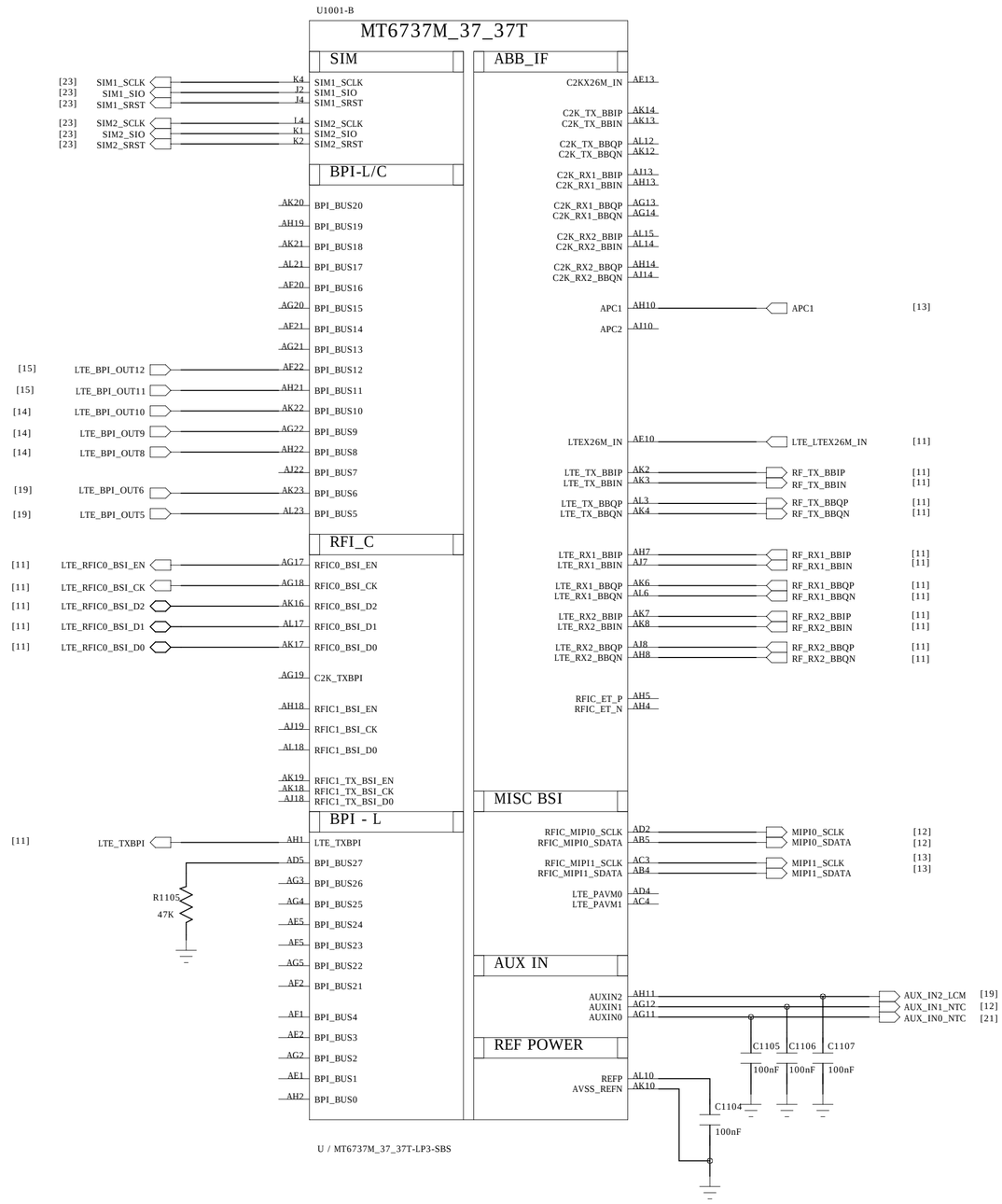

COMPANY: TRANSSION HOLDINGS				MODEL: H371	Modified Date: 2016-6-18	
DRAWN	LLZ/LX	DATED	20160216	TITLE: 11_BB_I	VERSION: V1.1	SHEET: 4 OF 23
CHECKED	< >	DATED	< >			

REVISION RECORD			
LTR	ECO NO:	APPROVED:	DATE:

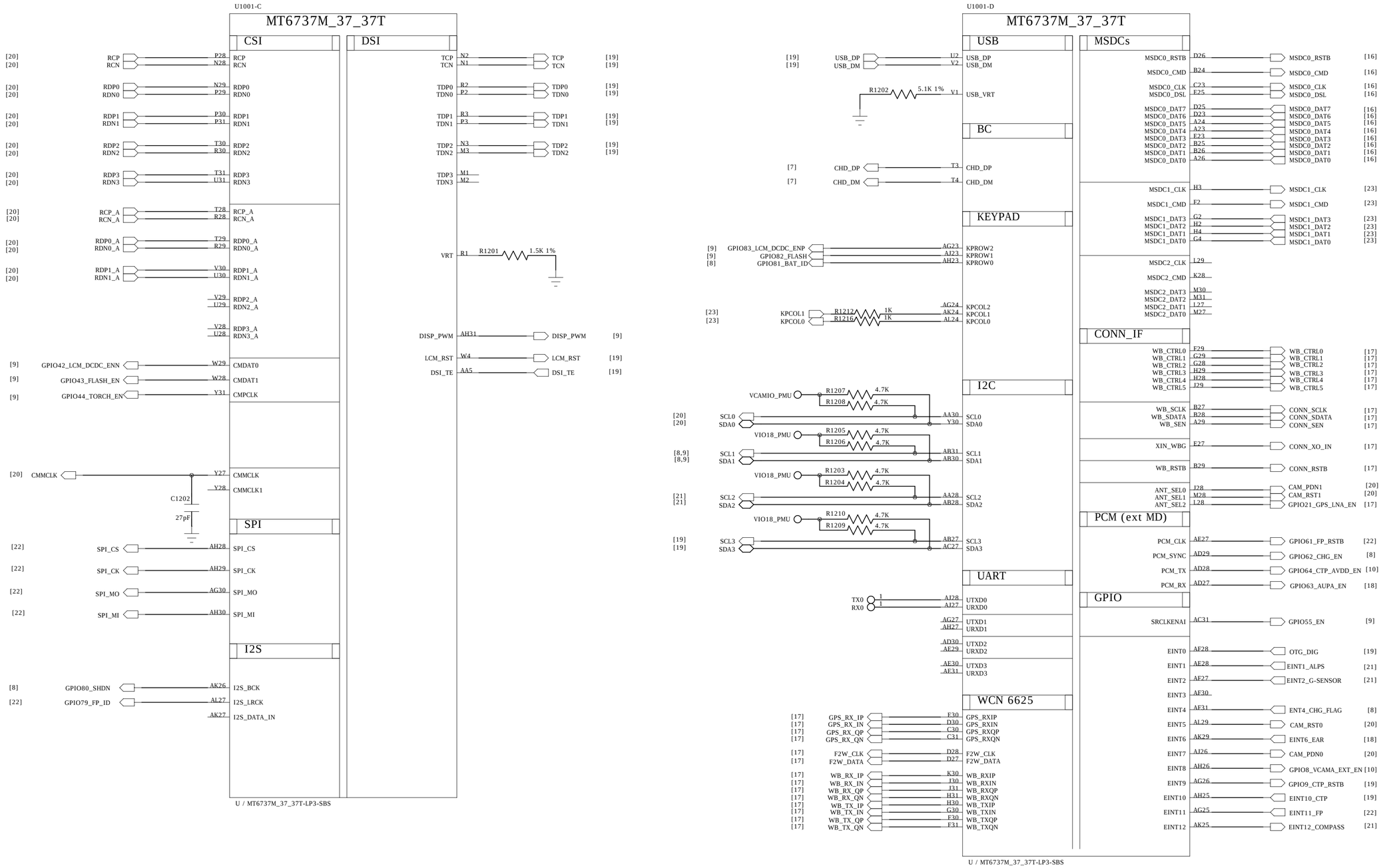

COMPANY: TRANSSION HOLDINGS				MODEL: H371	Modified Date: 2016-6-18
DRAWN	LLZ/LX	DATED	20160216	TITLE: 12_BB_II	VERSION: V1.1 / SHEET: 5 OF 23
CHECKED	< >	DATED	< >		

REVISION RECORD			
LTR	ECO NO:	APPROVED:	DATE:

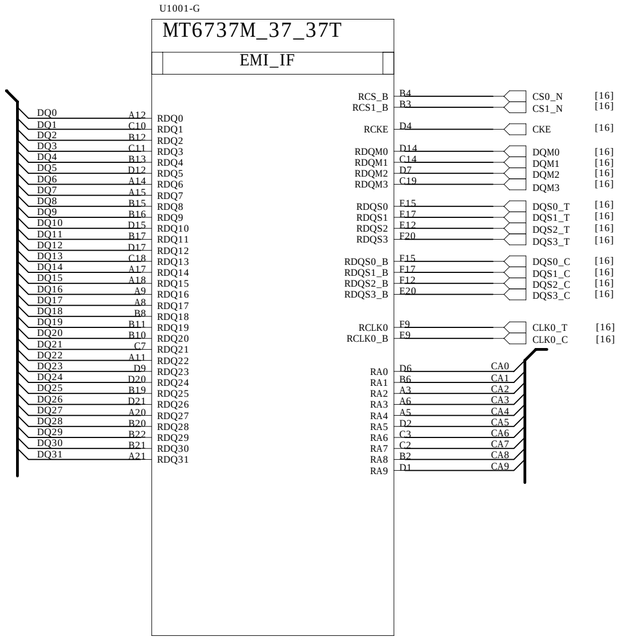

COMPANY: TRANSSION HOLDINGS				MODEL: H371	Modified Date: 2016-6-18
DRAWN	LLZ/LX	DATED	20160216	TITLE: 13_BB_III	VERSION: V1.1 / SHEET: 6 OF 23
CHECKED	< >	DATED	< >		

REVISION RECORD			
LTR	ECO NO:	APPROVED:	DATE:

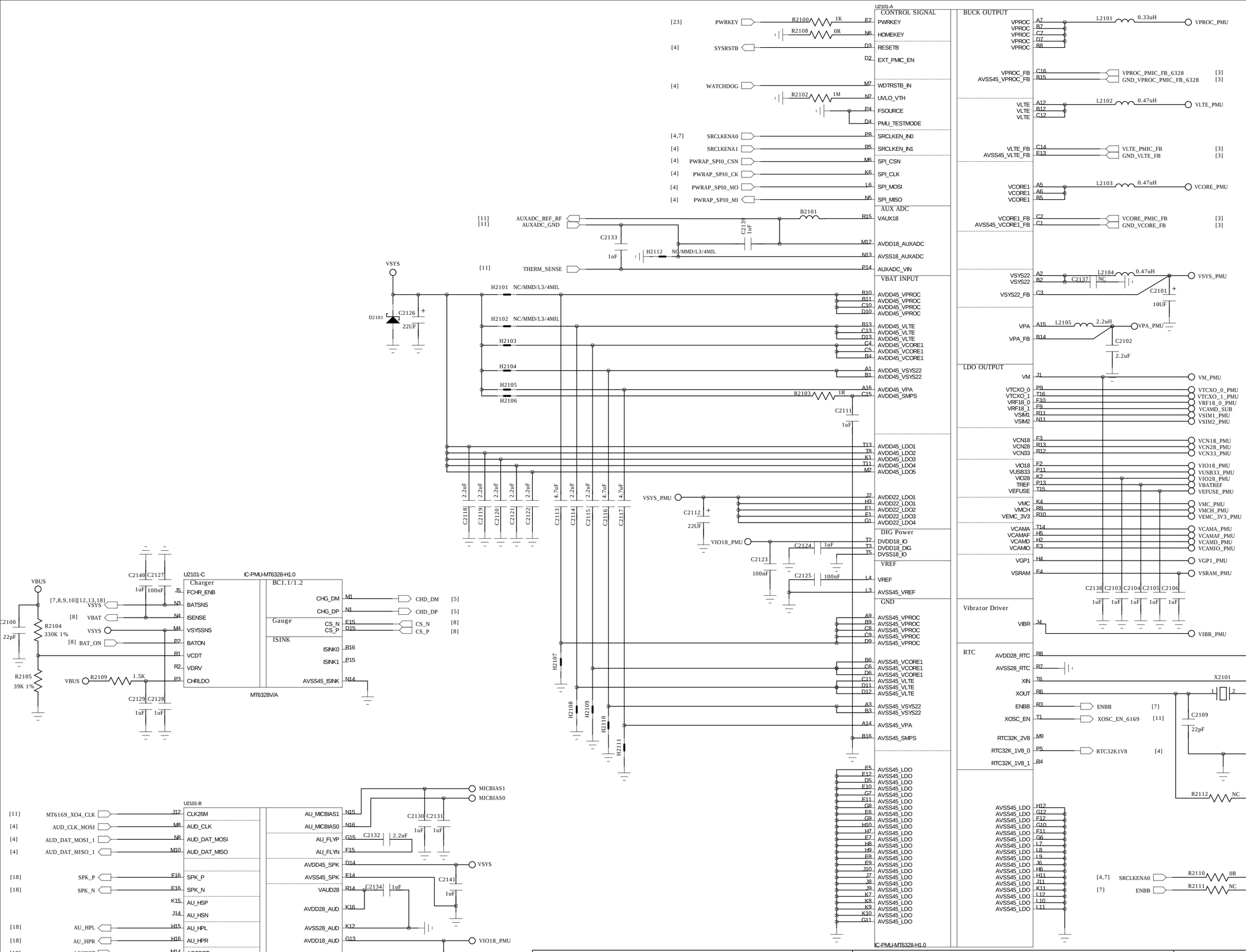

COMPANY: TRANSSION HOLDINGS				MODEL: MT6328V/A H371	Modified Date: 2016-6-18	
DRAWN	LLZ/LX	DATED	20160216	TITLE: 21_POWER_MT6328	VERSION: V1.1	SHEET: 7 OF 23
CHECKED	< >	DATED	< >			

REVISION RECORD			
LTR	ECO NO:	APPROVED:	DATE:

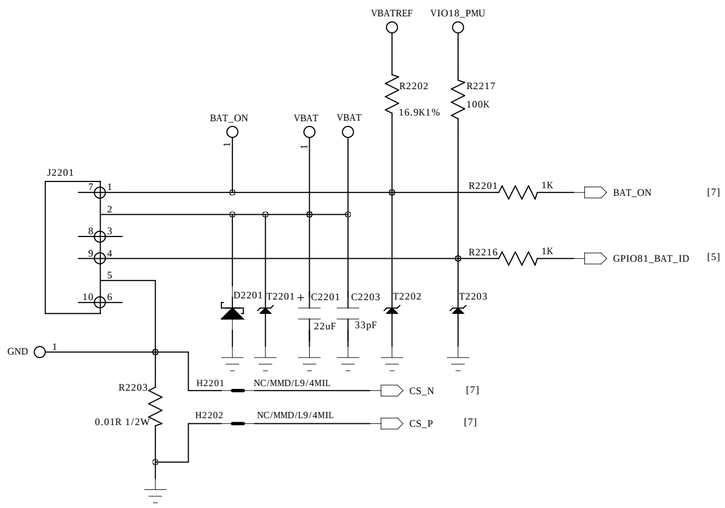

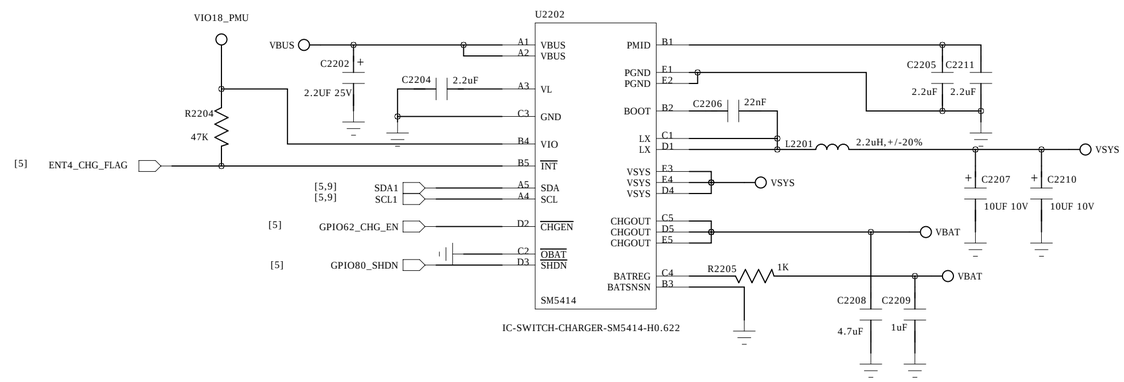

COMPANY: TRANSSION HOLDINGS				MODEL: H371	Modified Date: 2016-6-18
DRAWN	LLZ/LX	DATED	20160216	TITLE: 22_POWER_CHG	VERSION: V1.1 / SHEET: 8 OF 23
CHECKED	< >	DATED	< >		

REVISION RECORD			
LTR	ECO NO:	APPROVED:	DATE:

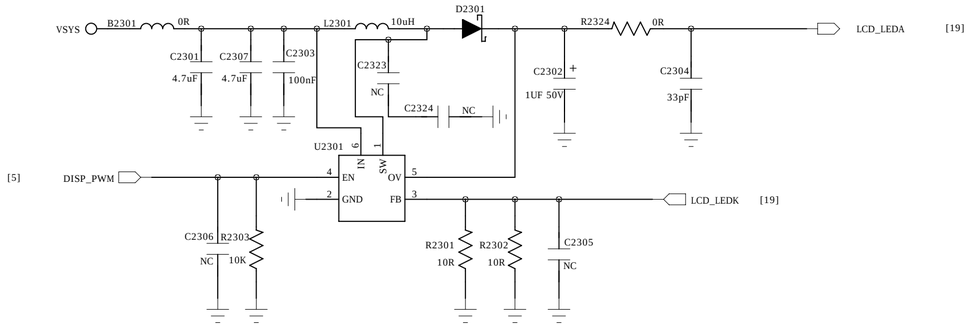

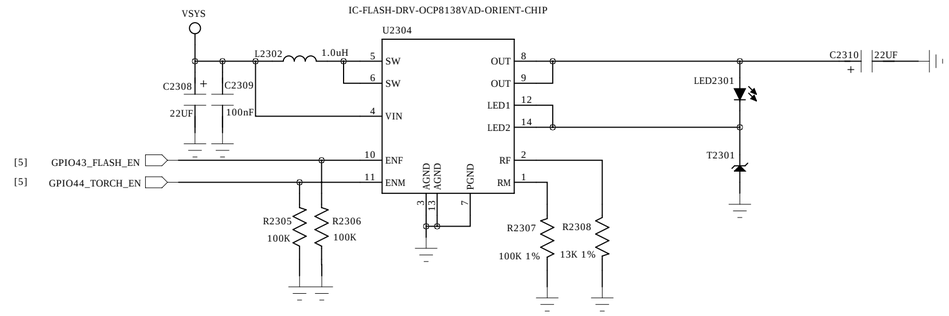

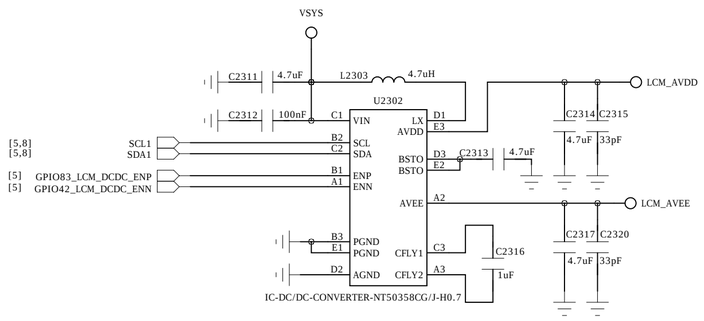

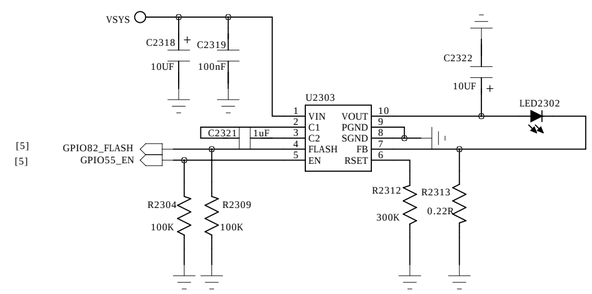

COMPANY: TRANSSION HOLDINGS				MODEL: H371	Modified Date: 2016-6-18	
DRAWN	LLZ/LX	DATED	20160216	TITLE: 23_POWER_LCM/FLASH	VERSION: V1.1	SHEET: 9 OF 23
CHECKED	< >	DATED	< >			

REVISION RECORD			
LTR	ECO NO:	APPROVED:	DATE:

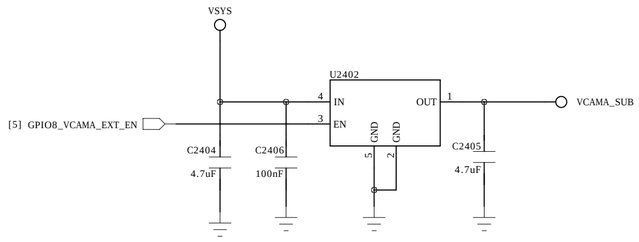

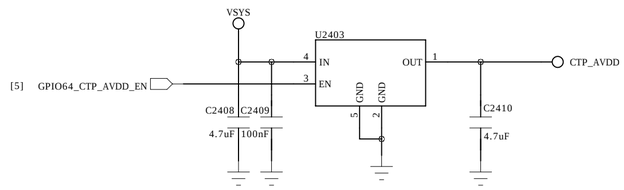

COMPANY: TRANSSION HOLDINGS				MODEL: H371	Modified Date: 2016-6-18
DRAWN	LLZ/LX	DATED	20160216	TITLE: 24_POWER_VCAMA/CTP	VERSION: V1.1 / SHEET: 10 OF 23
CHECKED	< >	DATED	< >		

REVISION RECORD			
LTR	ECO NO:	APPROVED:	DATE:

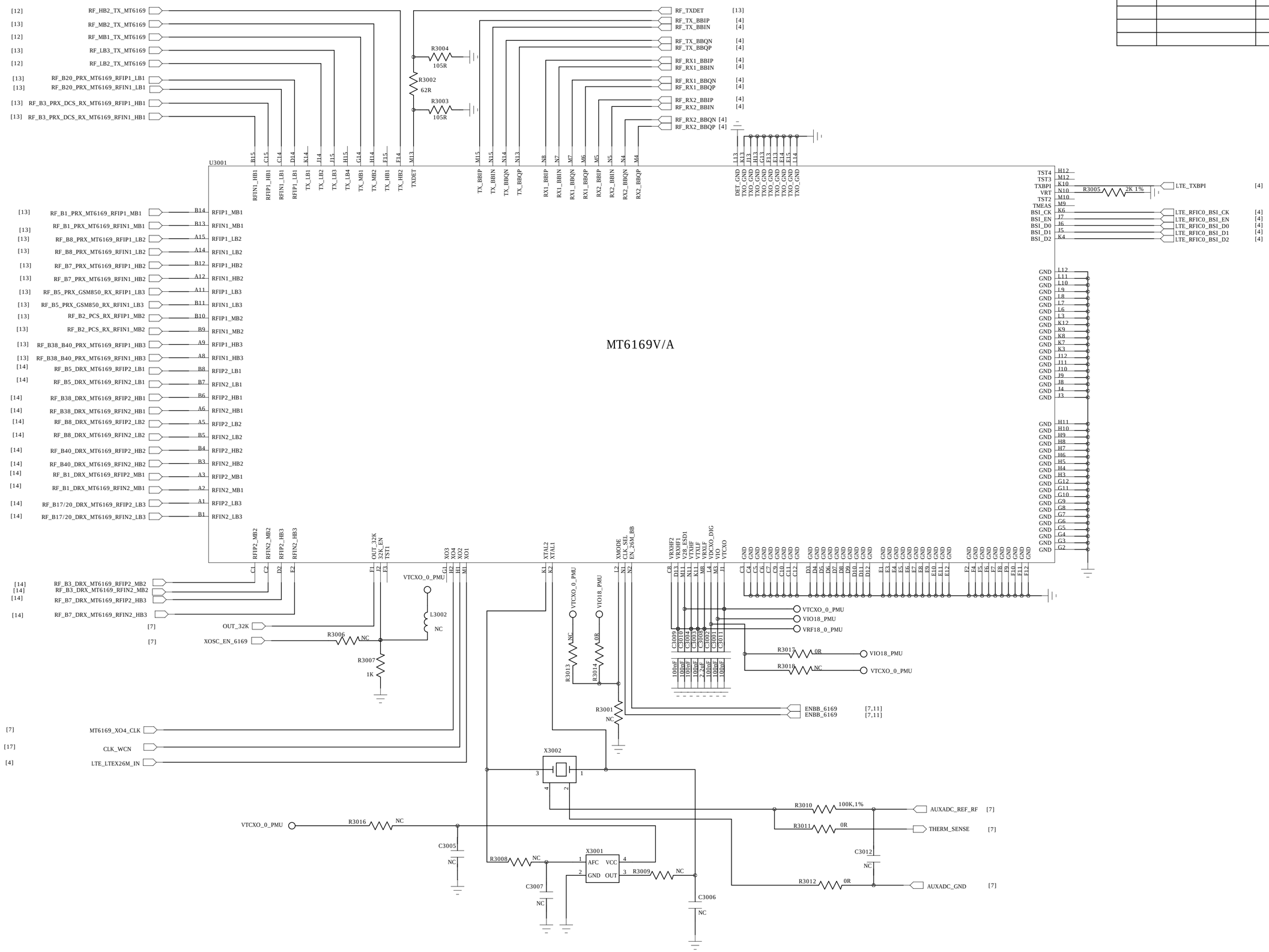

COMPANY: TRANSSION HOLDINGS		MODEL: H371	Modified Date: 2016-6-18
DRAWN LLZ/LX	DATED 20160216	TITLE: 30_RF_MT6169_PIN_OUT	VERSION: V1.1
CHECKED < >	DATED < >		SHEET: 11 OF 23

REVISION RECORD			
LTR	ECO NO:	APPROVED:	DATE:

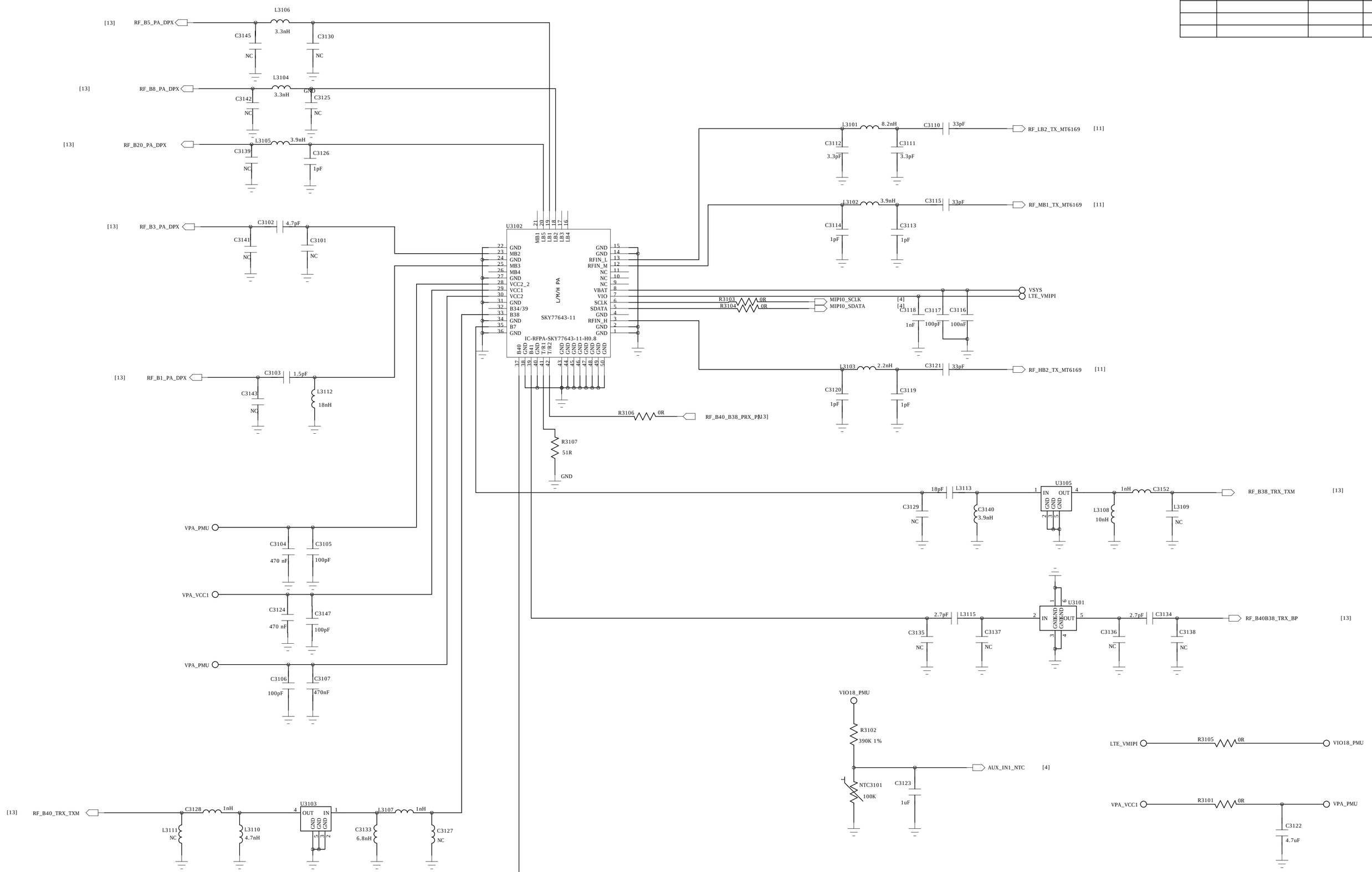

COMPANY: TRANSSION HOLDINGS		MODEL: H371	Modified Date: 2016-6-18
DRAWN LLZ/LX	DATED 20160216	TITLE: 31_RF_MT6169_RF_TX	VERSION: V1.1
CHECKED < >	DATED < >		SHEET: 12 OF 23

REVISION RECORD			
LTR	ECO NO:	APPROVED:	DATE:

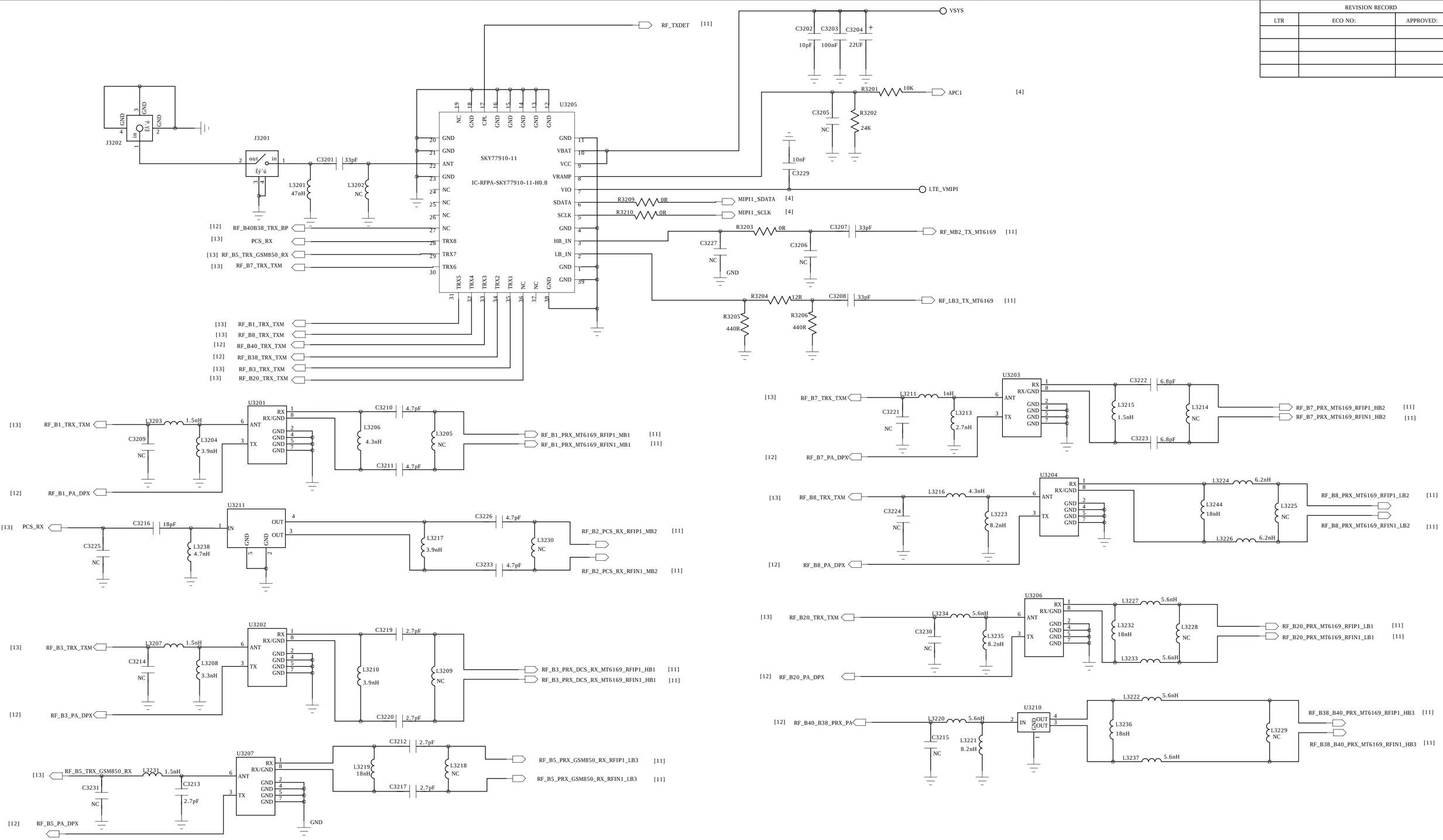

COMPANY: TRANSSION HOLDINGS		MODEL: H371	Modified Date: 2016-6-18
DRAWN LLZ/LX	DATED 20160216	TITLE: 32_RF_MT6169_RF_PRX	VERSION: V1.1 / SHEET: 13 OF 23
CHECKED < >	DATED < >		

REVISION RECORD			
LTR	ECO NO:	APPROVED:	DATE:

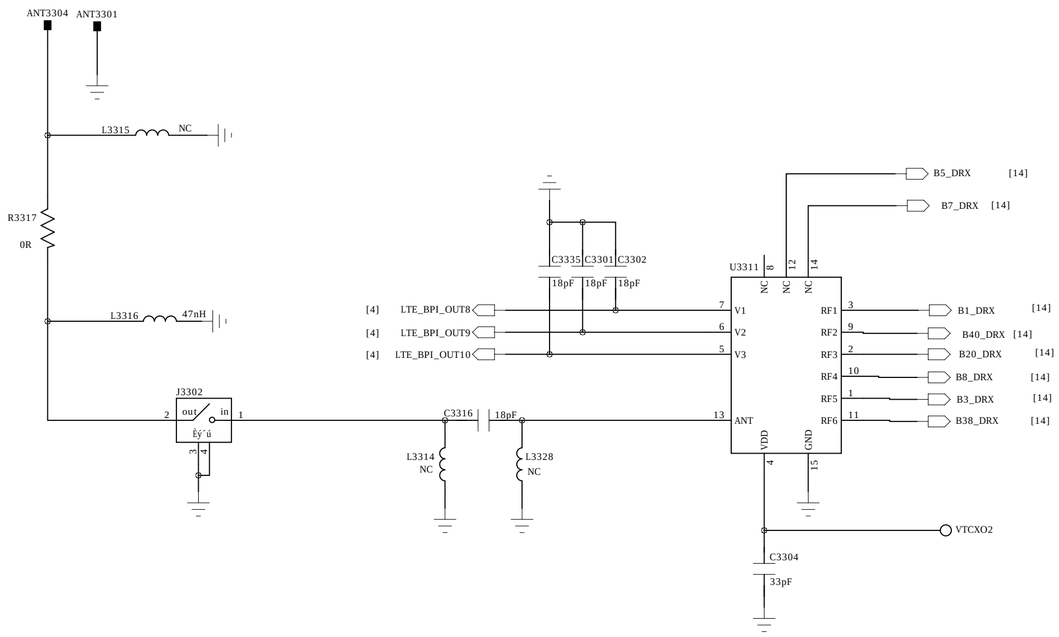

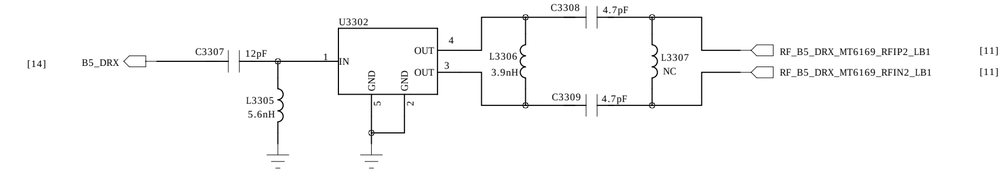

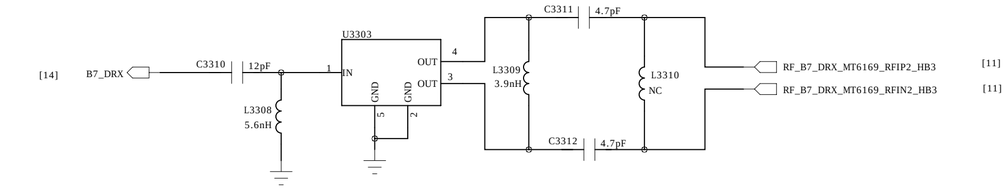

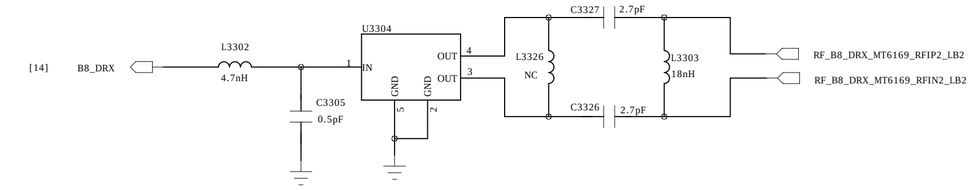

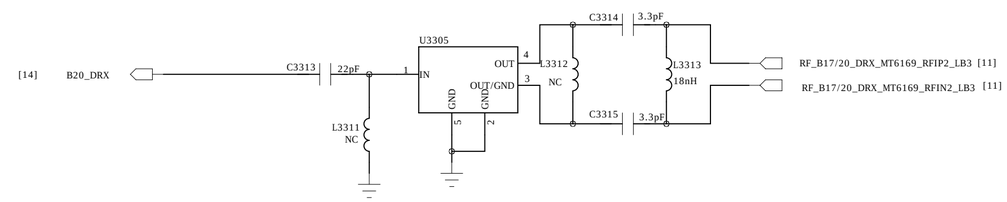

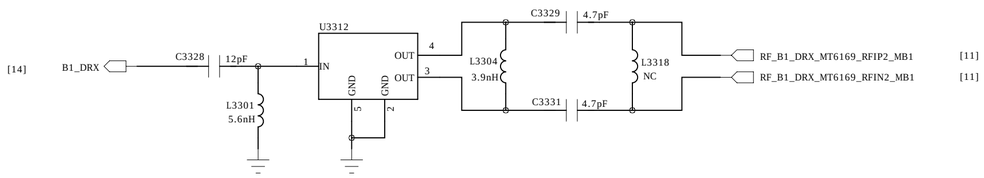

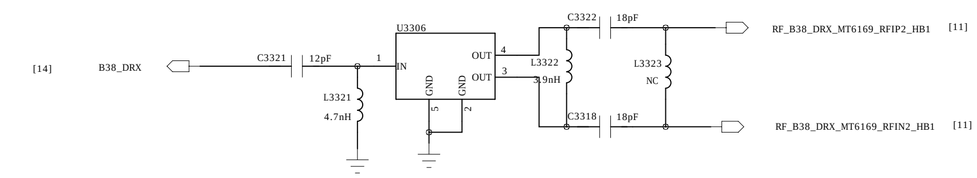

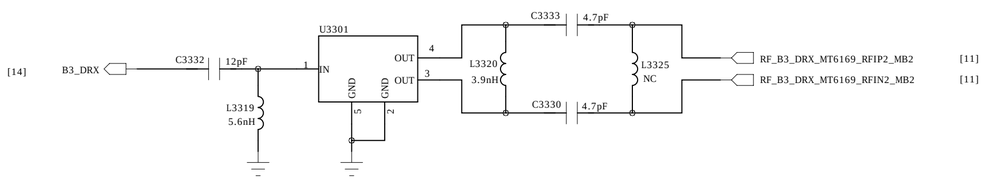

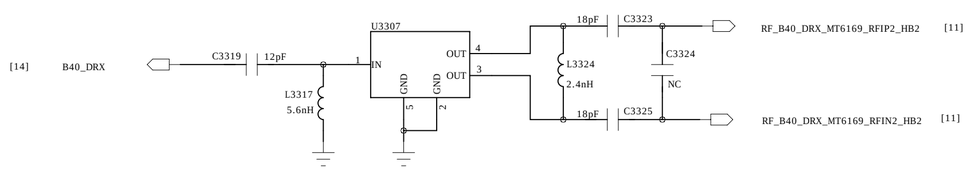

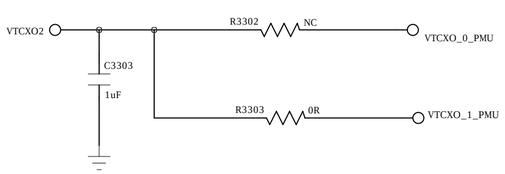

COMPANY: TRANSSION HOLDINGS				MODEL: H371	Modified Date: 2016-6-18
DRAWN	LLZ/LX	DATED	20160216	TITLE: 33_RF_MT6169_RF_DRX	VERSION: V1.1 / SHEET: 14 OF 23
CHECKED	< >	DATED	< >		

REVISION RECORD			
LTR	ECO NO:	APPROVED:	DATE:

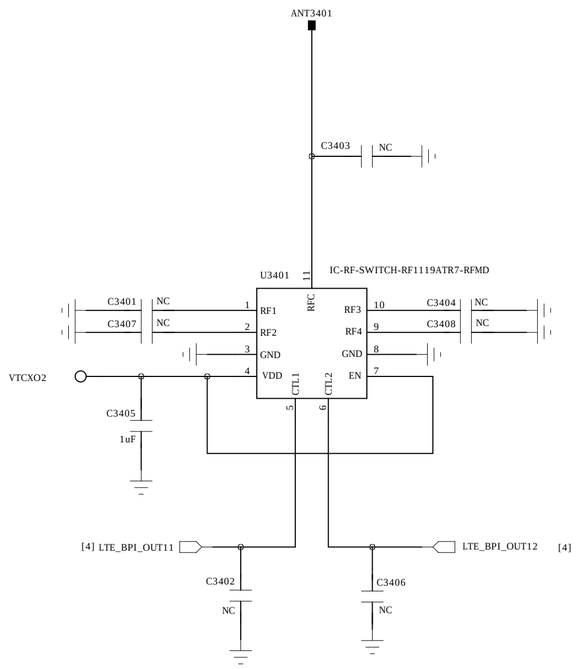

COMPANY: TRANSSION HOLDINGS				MODEL: H371	Modified Date: 2016-6-18
DRAWN	LLZ/LX	DATED	20160216	TITLE: 34_ANT_CONTROLLER	VERSION: V1.1 / SHEET: 15 OF 23
CHECKED	< >	DATED	< >		

REVISION RECORD			
LTR	ECO NO:	APPROVED:	DATE:

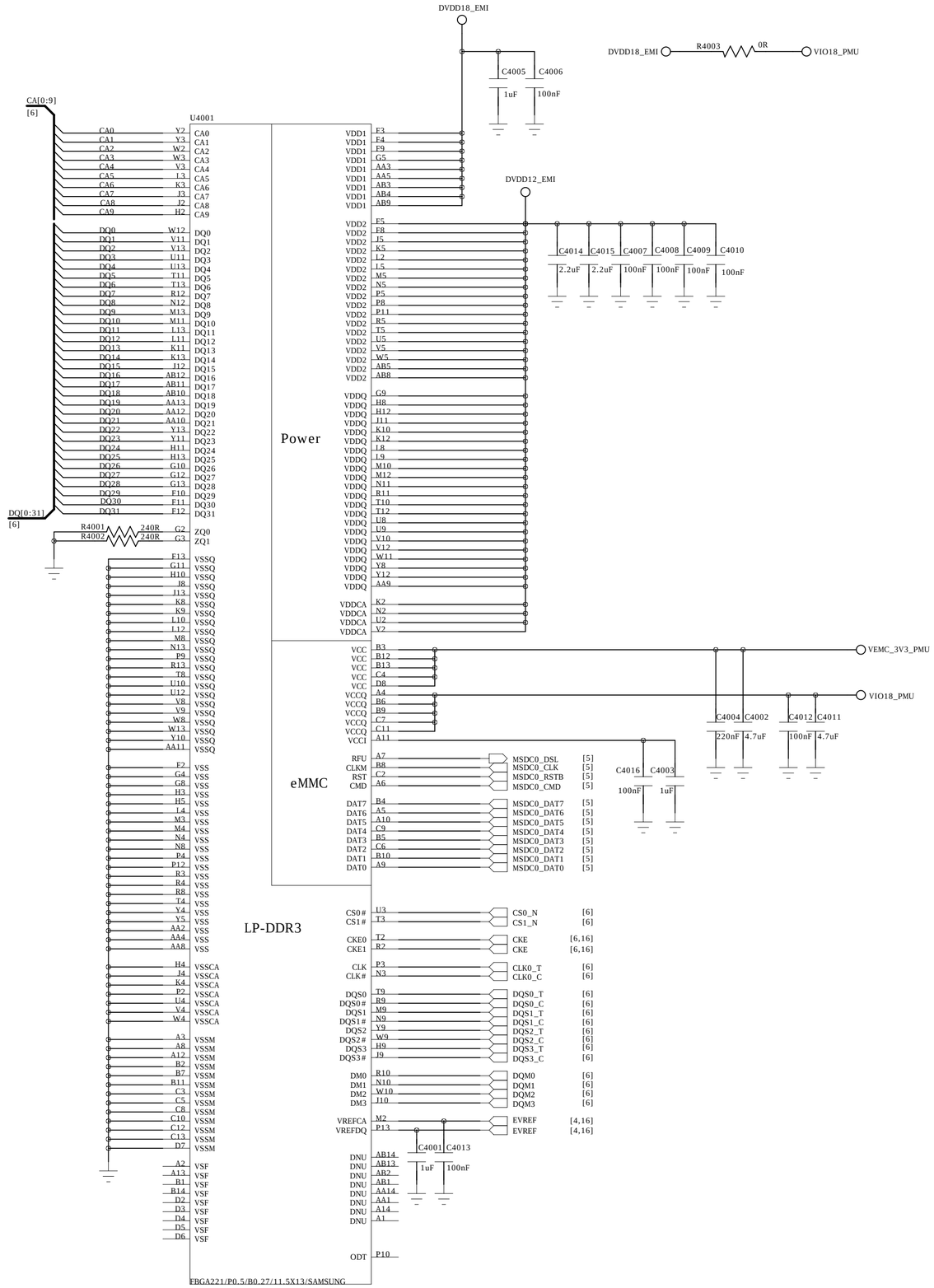

COMPANY: TRANSSION HOLDINGS		MODEL: H371	Modified Date: 2016-6-18
DRAWN LLZ/LX	DATED 20160216	TITLE: 40_MEMORY_EMMC_LPDDR3	VERSION: V1.1 / SHEET: 16 OF 23
CHECKED < >	DATED < >		

REVISION RECORD			
LTR	ECO NO:	APPROVED:	DATE:

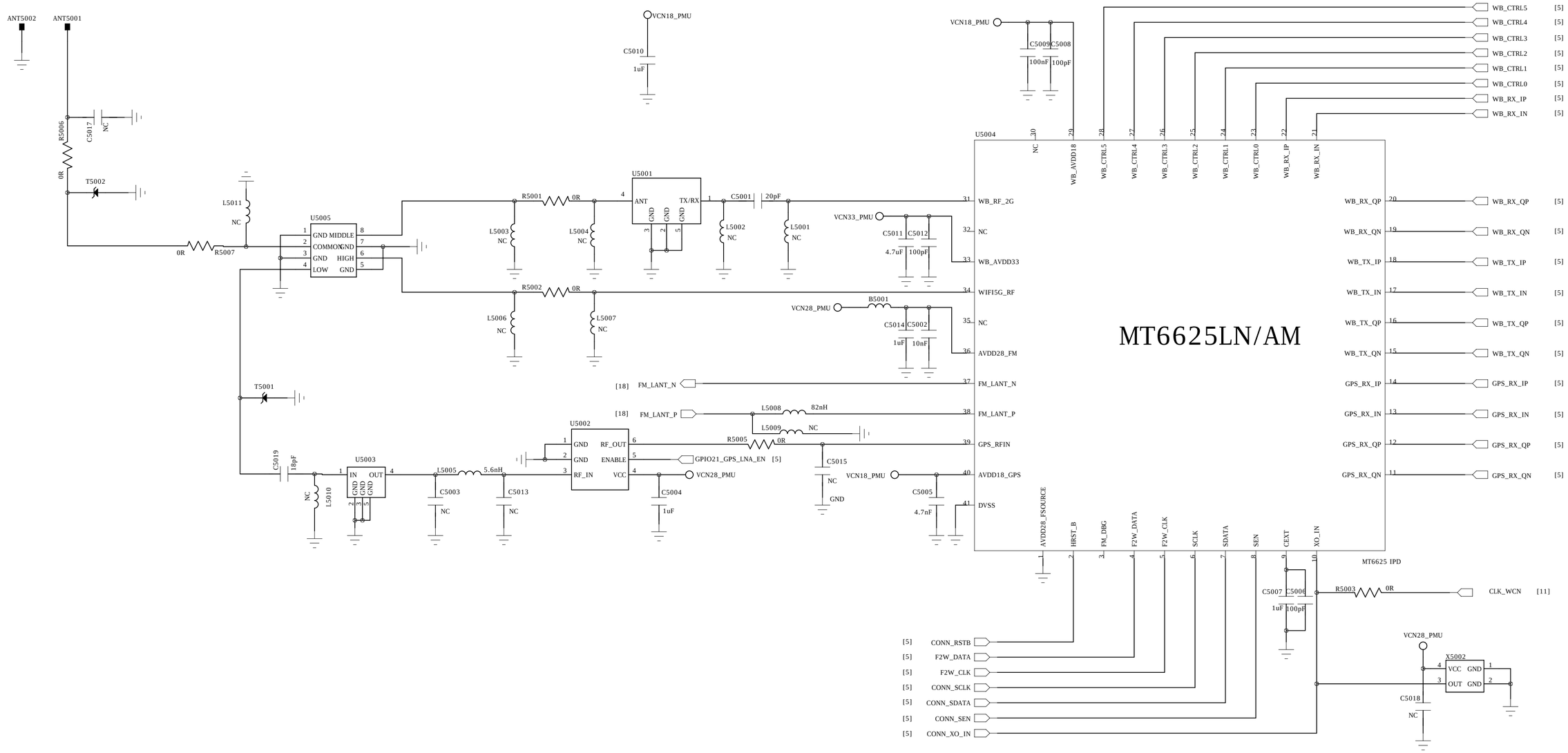

COMPANY: TRANSSION HOLDINGS				MODEL: H371	Modified Date: 2016-6-18	
DRAWN	LLZ/LX	DATED	20160216	TITLE: 50_BT/WIFI/GPS/FM_MT6625	VERSION: V1.1	SHEET: 17 OF 23
CHECKED	< >	DATED	< >			

REVISION RECORD			
LTR	ECO NO:	APPROVED:	DATE:

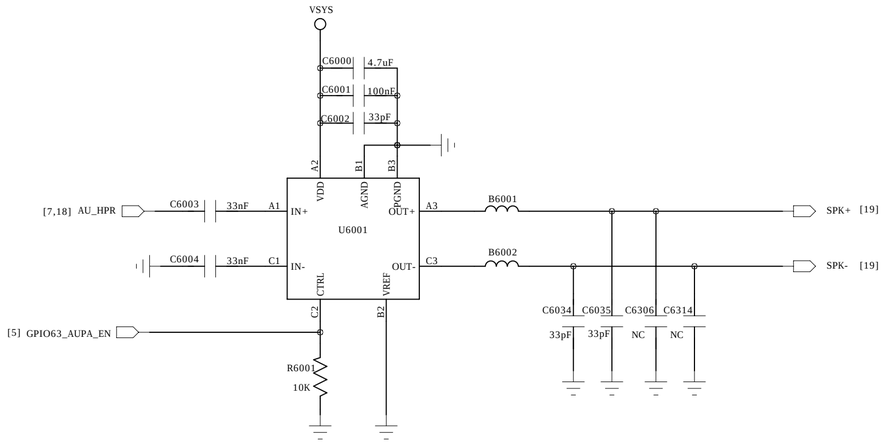

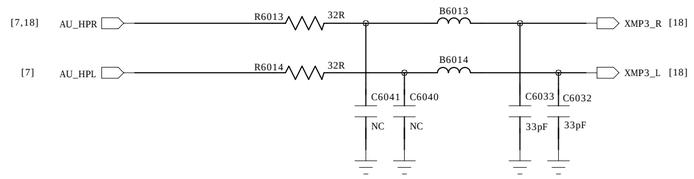

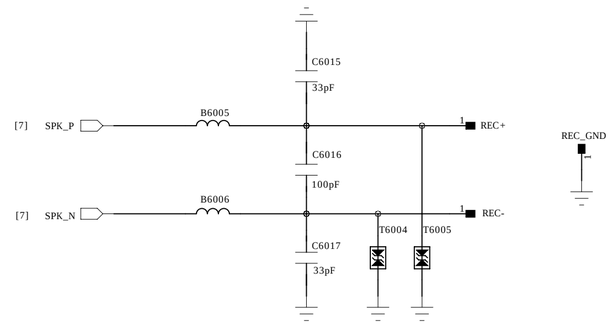

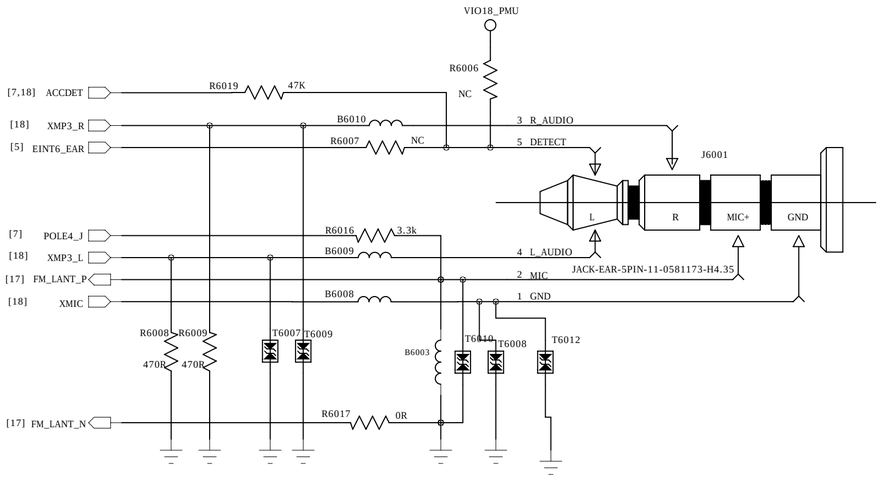

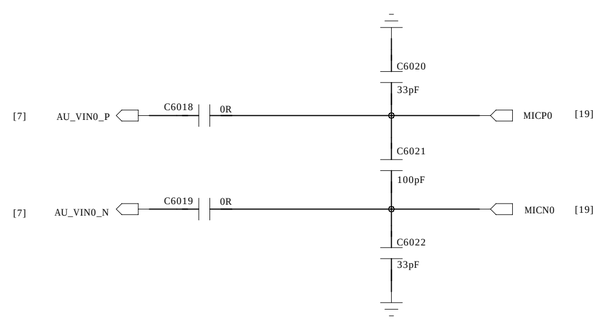

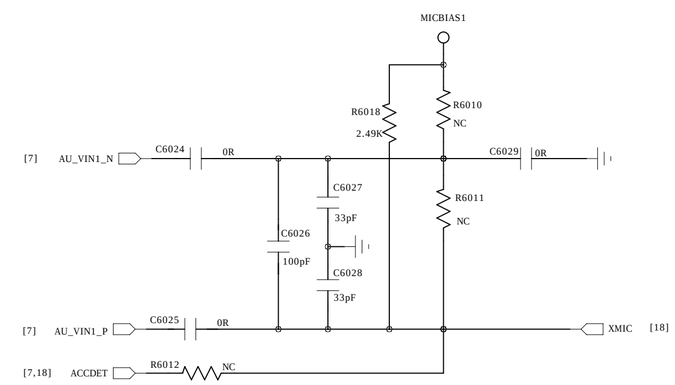

COMPANY: TRANSSION HOLDINGS				MODEL: H371	Modified Date: 2016-6-18
DRAWN	LLZ/LX	DATED	20160216	TITLE: 60_AUDIO	VERSION: V1.1 / SHEET: 18 OF 23
CHECKED	< >	DATED	< >		

REVISION RECORD			
LTR	ECO NO:	APPROVED:	DATE:

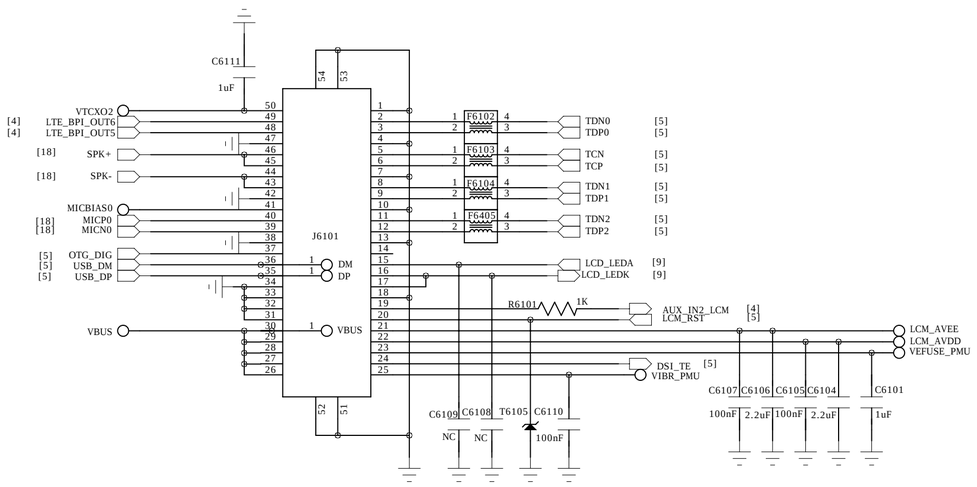

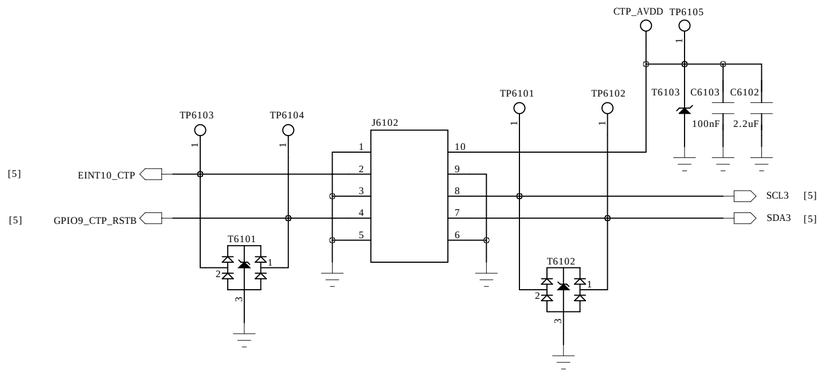

COMPANY: TRANSSION HOLDINGS				MODEL: H371	Modified Date: 2016-6-18	
DRAWN	LLZ/LX	DATED	20160216	TITLE: 61_LCD_CTP	VERSION: V1.1	SHEET: 19 OF 23
CHECKED	< >	DATED	< >			

REVISION RECORD			
LTR	ECO NO:	APPROVED:	DATE:

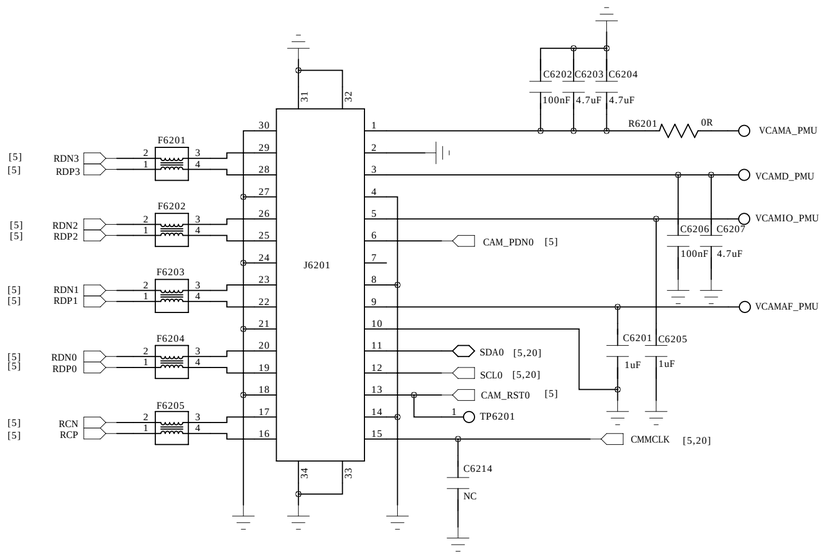

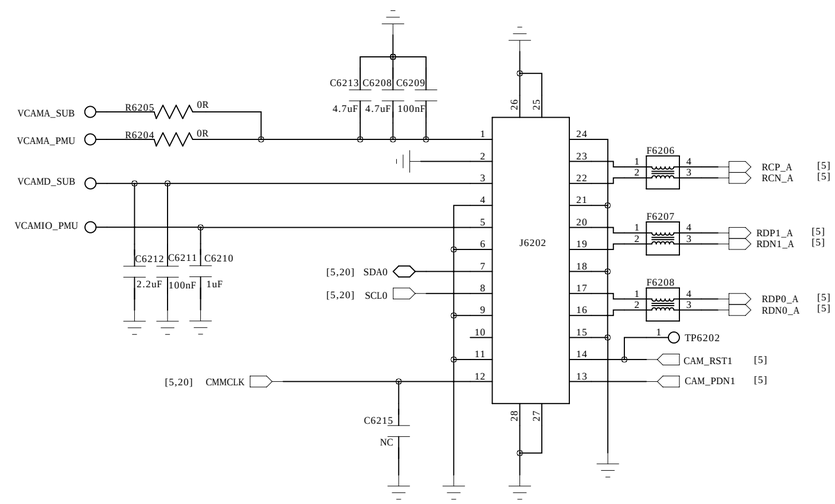

COMPANY: TRANSSION HOLDINGS				MODEL: H371	Modified Date: 2016-6-18
DRAWN	LLZ/LX	DATED	20160216	TITLE: 62_CAMERA	VERSION: V1.1 / SHEET: 20 OF 23
CHECKED	< >	DATED	< >		

REVISION RECORD			
LTR	ECO NO:	APPROVED:	DATE:

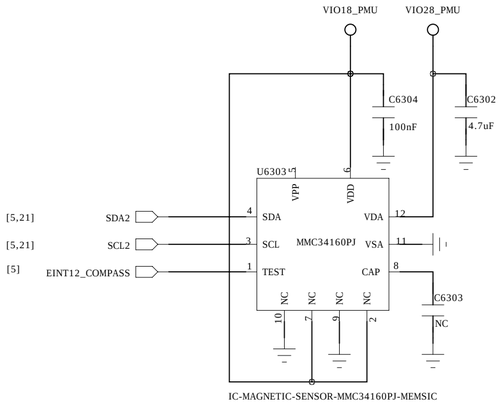

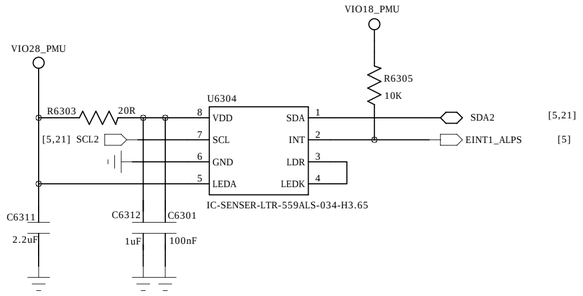

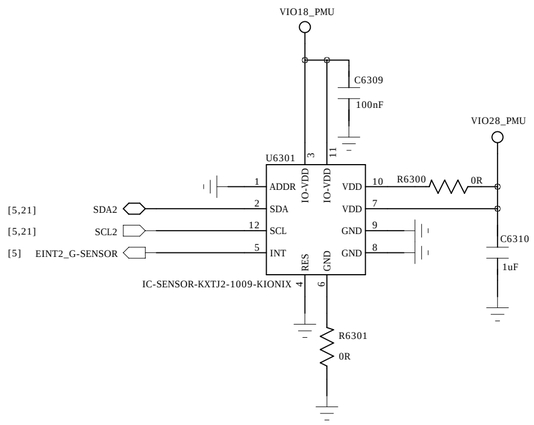

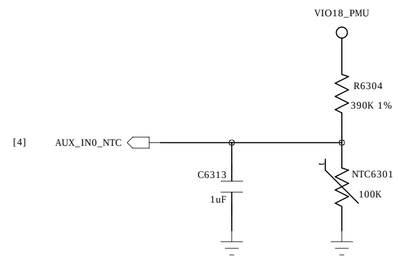

COMPANY: TRANSSION HOLDINGS				MODEL: H371	Modified Date: 2016-6-18
DRAWN	LLZ/LX	DATED	20160216	TITLE: 63_SENSORS	VERSION: V1.1 / SHEET: 21 OF 23
CHECKED	< >	DATED	< >		

REVISION RECORD			
LTR	ECO NO:	APPROVED:	DATE:

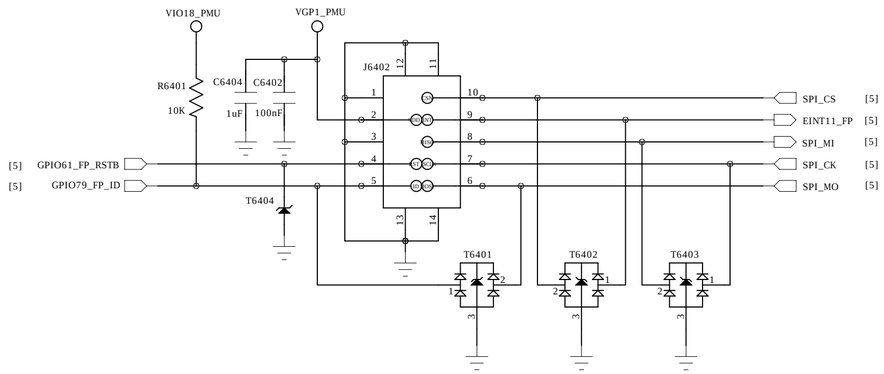

COMPANY: TRANSSION HOLDINGS				MODEL: H371	Modified Date: 2016-6-18
DRAWN	LLZ/LX	DATED	20160216	TITLE: 64_FINGER/FPC	VERSION: V1.1 / SHEET: 22 OF 23
CHECKED	< >	DATED	< >		

REVISION RECORD			
LTR	ECO NO:	APPROVED:	DATE:

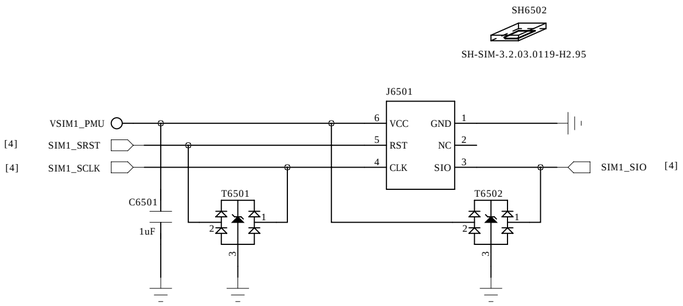

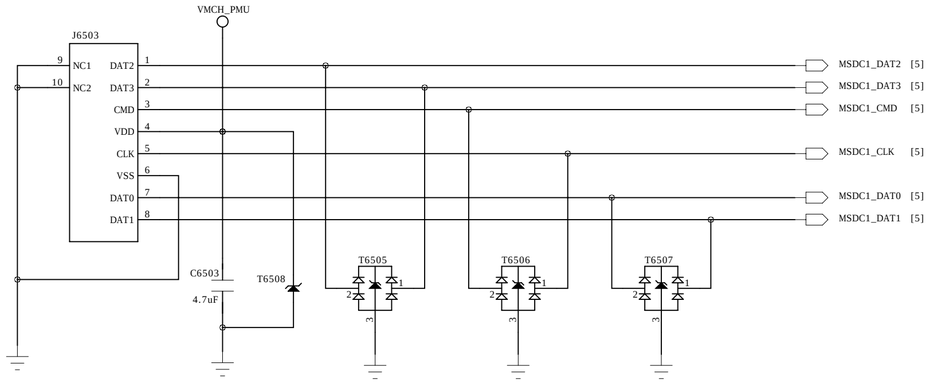

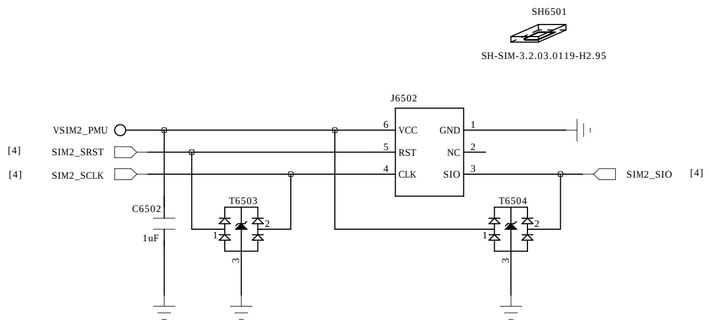

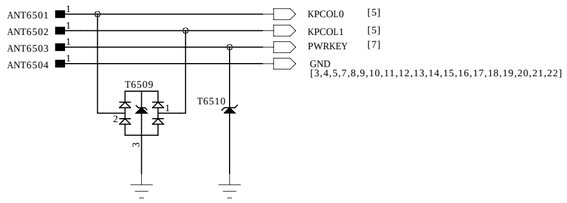

COMPANY: TRANSSION HOLDINGS				MODEL: H371	Modified Date: 2016-6-18
DRAWN	LLZ/LX	DATED	20160216	TITLE: 65_SIM_T/FLASH_KEYPAD	VERSION: V1.1 / SHEET: 23 OF 23
CHECKED	< >	DATED	< >		