Project : MT6735 REF_SCH TOP LEVEL

REVISION RECORD			
LTR	ECO NO:	APPROVED:	DATE:

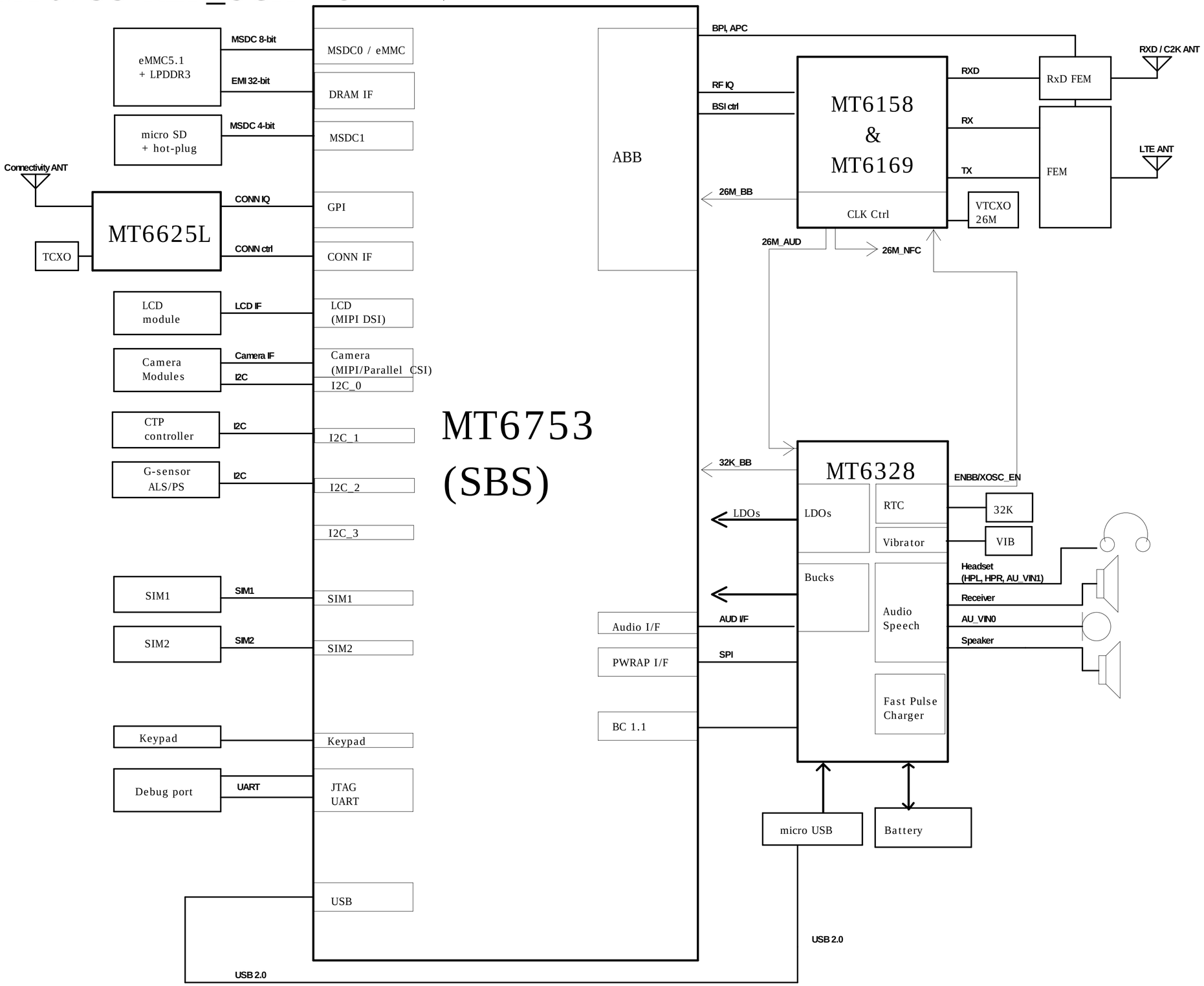

COMPANY: Shanghai ReallyTek Information Technology Co.,Ltd				MODEL: H537	Modified Date: 2016-6-16
DRAWN	YQY	DATED	20160321	TITLE: 00_BLOCK_DIAGRAM	VERSION: V1.3 / SHEET: 1 OF 22
CHECKED	< >	DATED	< >		

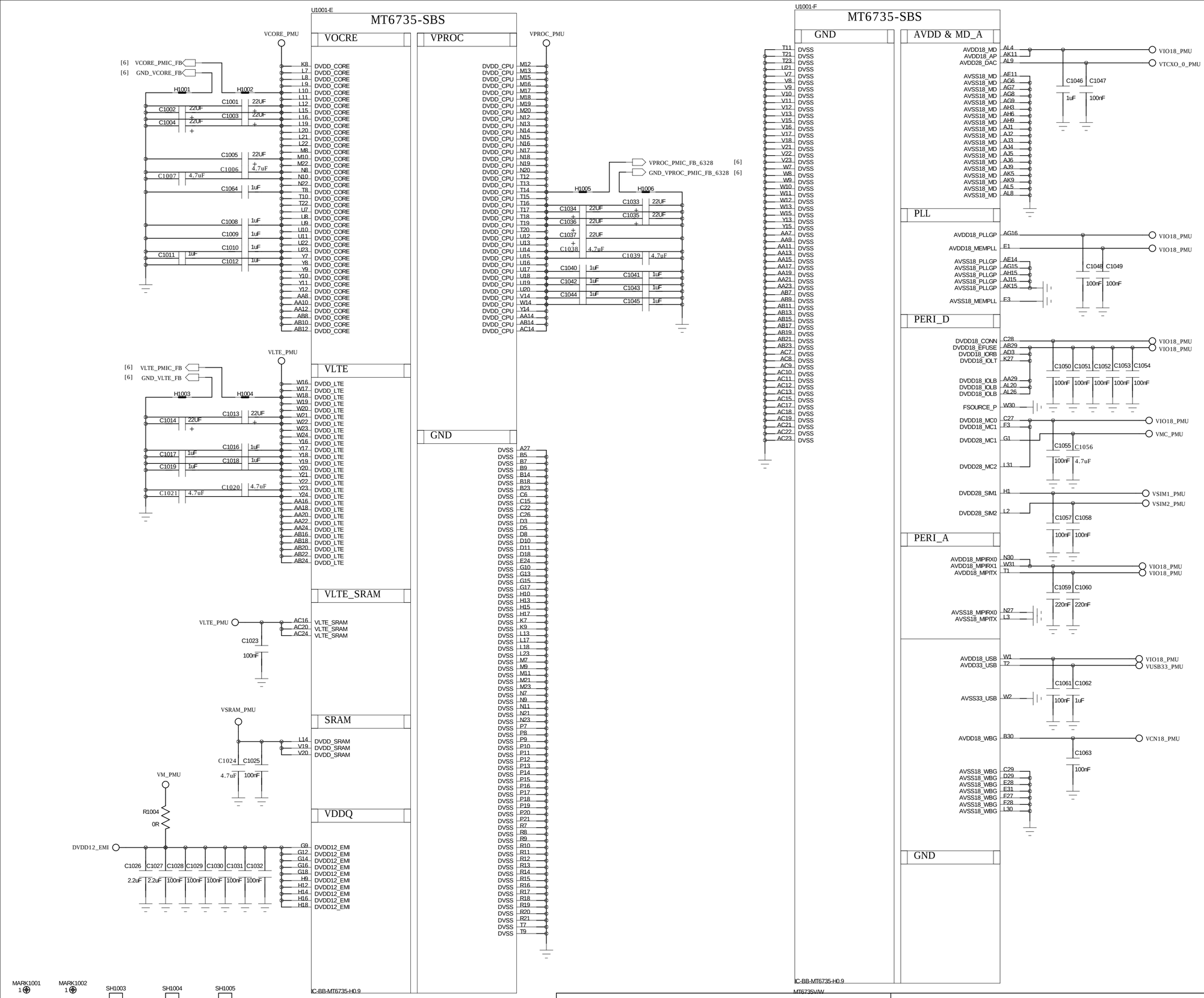

REVISION RECORD			
LTR	ECO NO:	APPROVED:	DATE:

MARK1001 1
MARK1002 1
SH1001 SH_CLIP_81800A698_ECT
SH1002 SH_CLIP_81800A698_ECT
SH1003 SH-BB-H536
SH1004 SH-RF-H536
SH1005 SH-MT6625-H536
SH1006 SH-RFPA-H536
SH1007 SH-11-H536
SH1008 SH-AUDIO-H536
WPL1001 WATERPROOF-LABEL
LOGO1001 TRANSSION-3.5H
SN1001 SN_S
SN1002 SN

COMPANY: Shanghai ReallyTek Information Technology Co.,Ltd		MODEL: H537	Modified Date: 2016-6-16
DRAWN YQY	DATED 20160321	TITLE: 10_BB_POWER	VERSION: V1.3 / SHEET: 2 OF 22
CHECKED < >	DATED < >		

REVISION RECORD			
LTR	ECO NO:	APPROVED:	DATE:

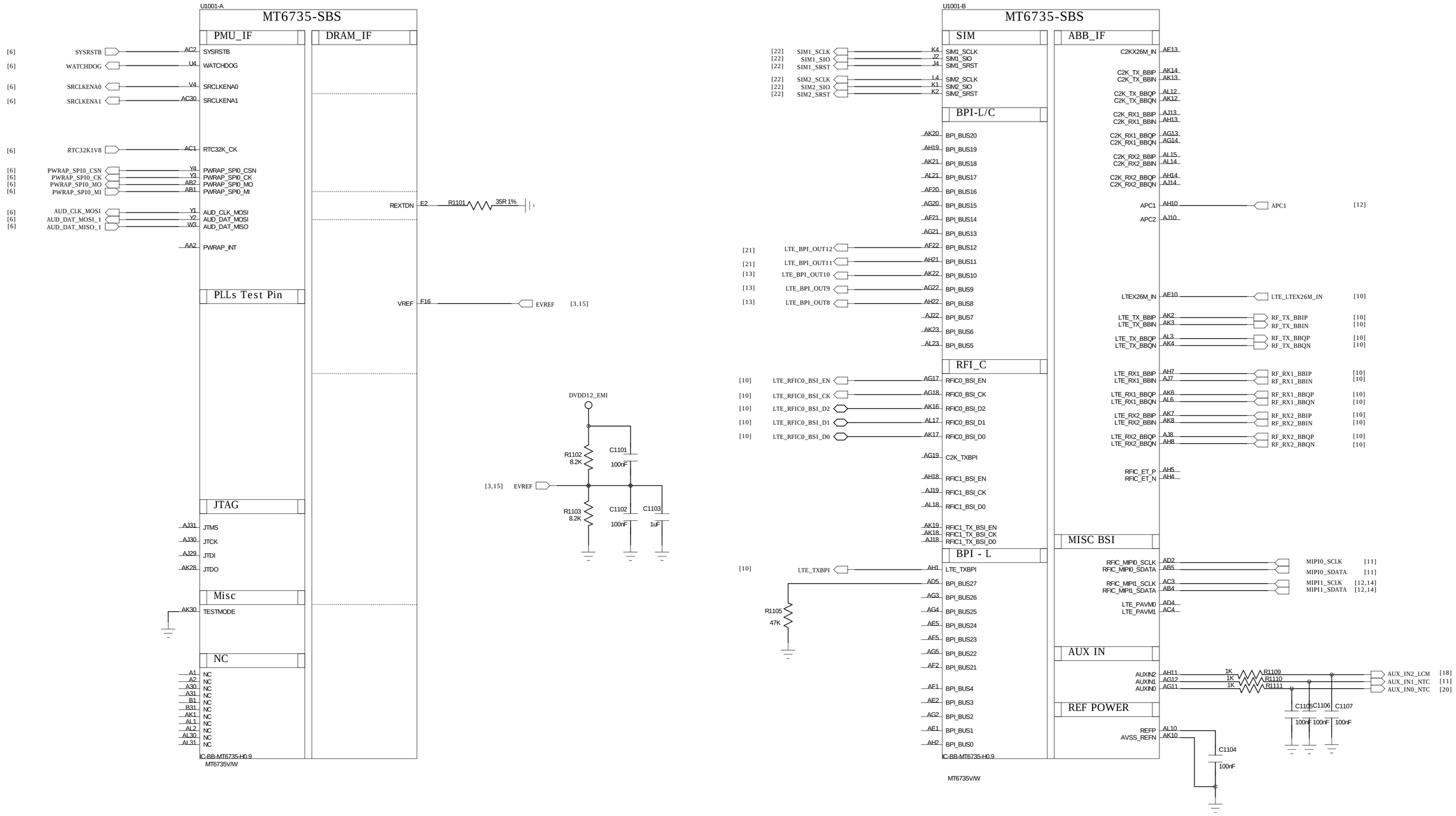

COMPANY: Shanghai ReallyTek Information Technology Co.,Ltd				MODEL: H537	Modified Date: 2016-6-16
DRAWN	YQY	DATED	20160321	TITLE: 11_BB_I	VERSION: V1.3 / SHEET: 3 OF 22
CHECKED	< >	DATED	< >		

REVISION RECORD			
LTR	ECO NO:	APPROVED:	DATE:

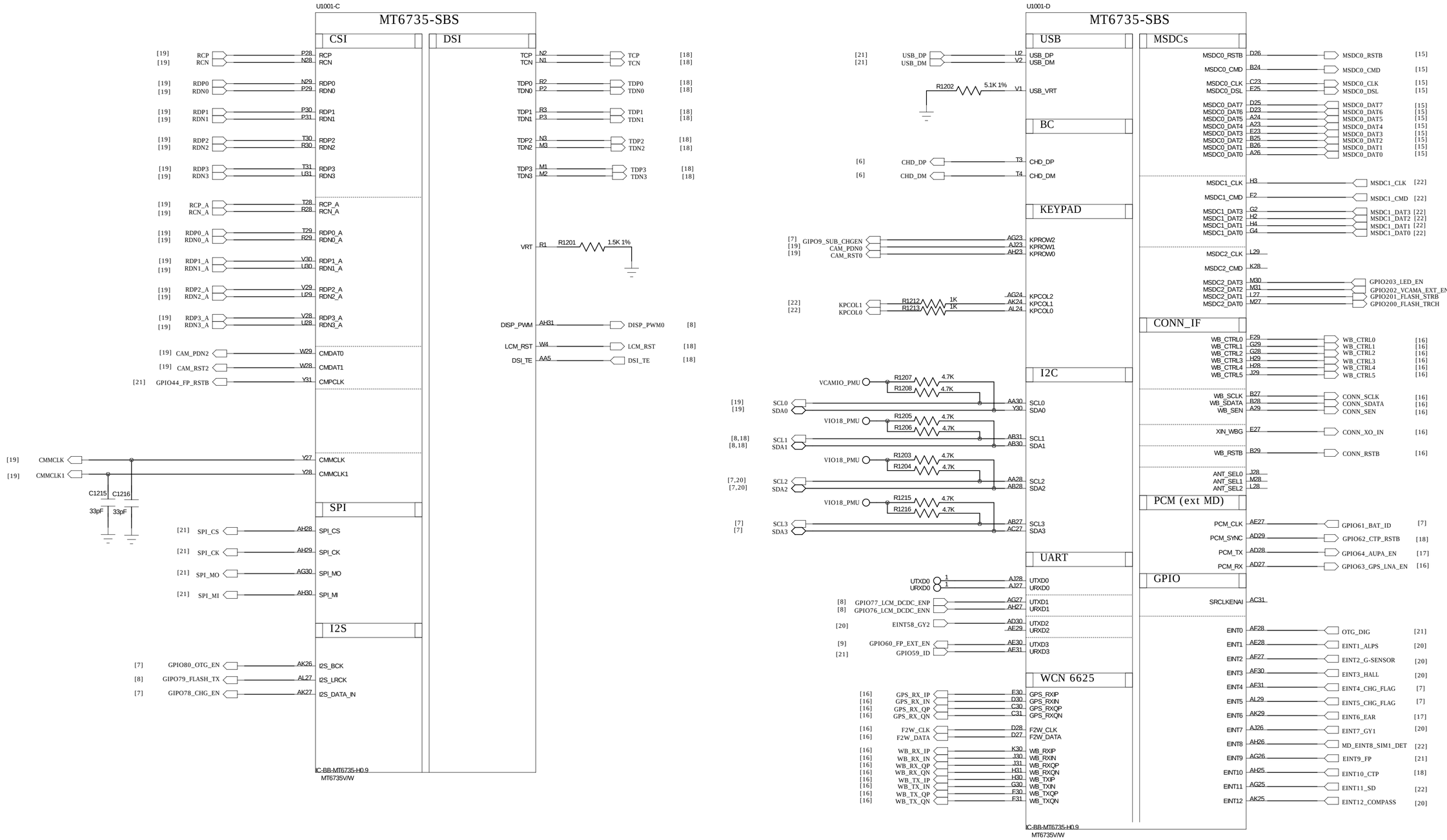

COMPANY: Shanghai ReallyTek Information Technology Co.,Ltd				MODEL: H537	Modified Date: 2016-6-16
DRAWN	YQY	DATED	20160321	TITLE: 12_BB_II	VERSION: V1.3 / SHEET: 4 OF 22
CHECKED	< >	DATED	< >		

REVISION RECORD			
LTR	ECO NO:	APPROVED:	DATE:

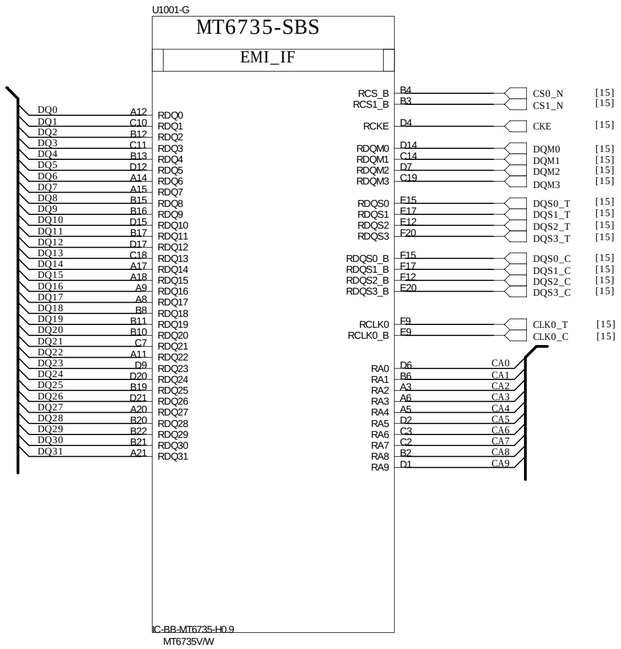

COMPANY: Shanghai ReallyTek Information Technology Co.,Ltd				MODEL: H537	Modified Date: 2016-6-16
DRAWN	YQY	DATED	20160321	TITLE: 13_BB_III	VERSION: V1.3 / SHEET: 5 OF 22
CHECKED	< >	DATED	< >		

REVISION RECORD			
LTR	ECO NO:	APPROVED:	DATE:

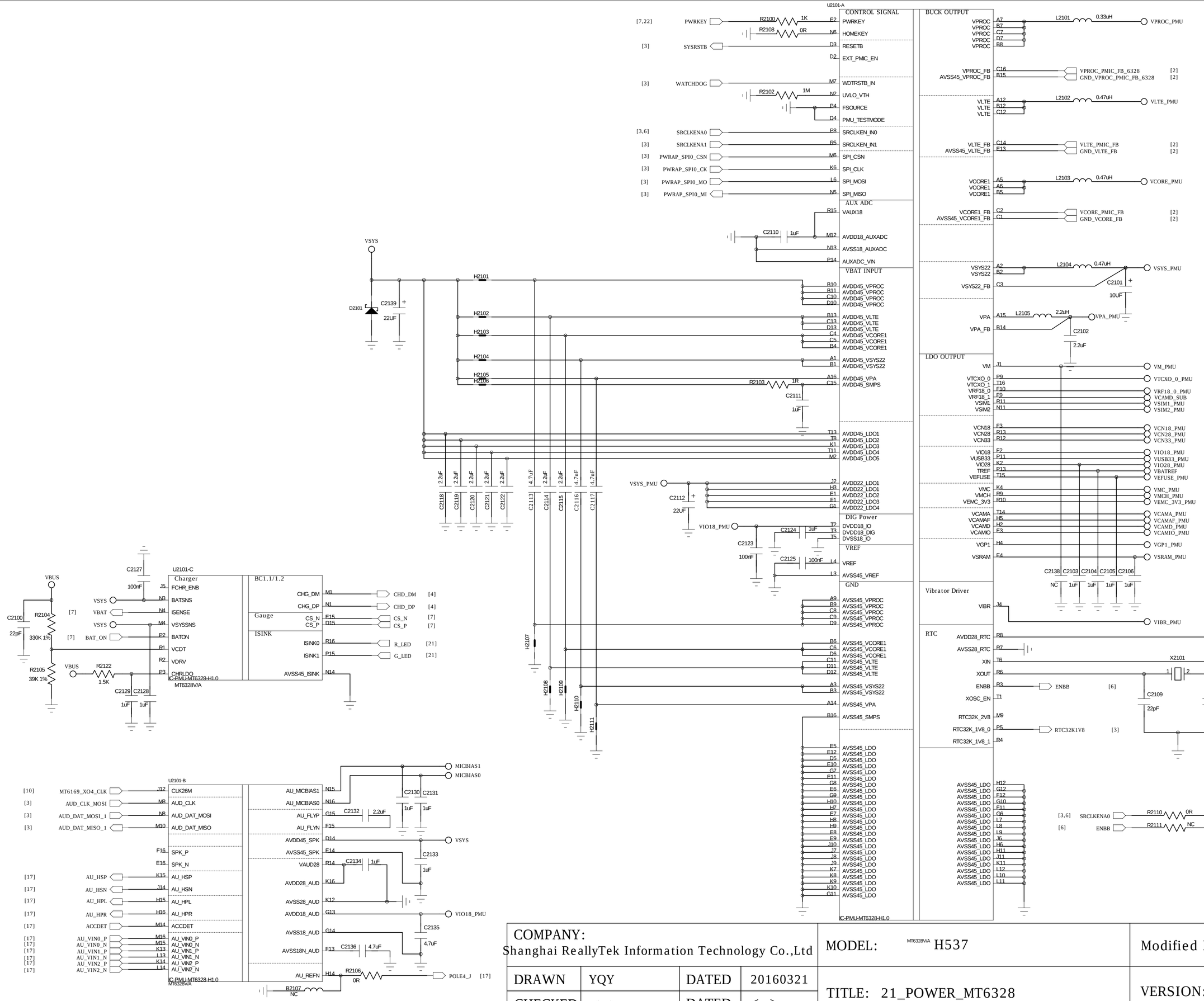

COMPANY: Shanghai ReallyTek Information Technology Co.,Ltd				MODEL: MT6328V/A H537	Modified Date: 2016-6-16
DRAWN	YQY	DATED	20160321	TITLE: 21_POWER_MT6328	VERSION: V1.3 / SHEET: 6 OF 22
CHECKED	< >	DATED	< >		

REVISION RECORD			
LTR	ECO NO:	APPROVED:	DATE:

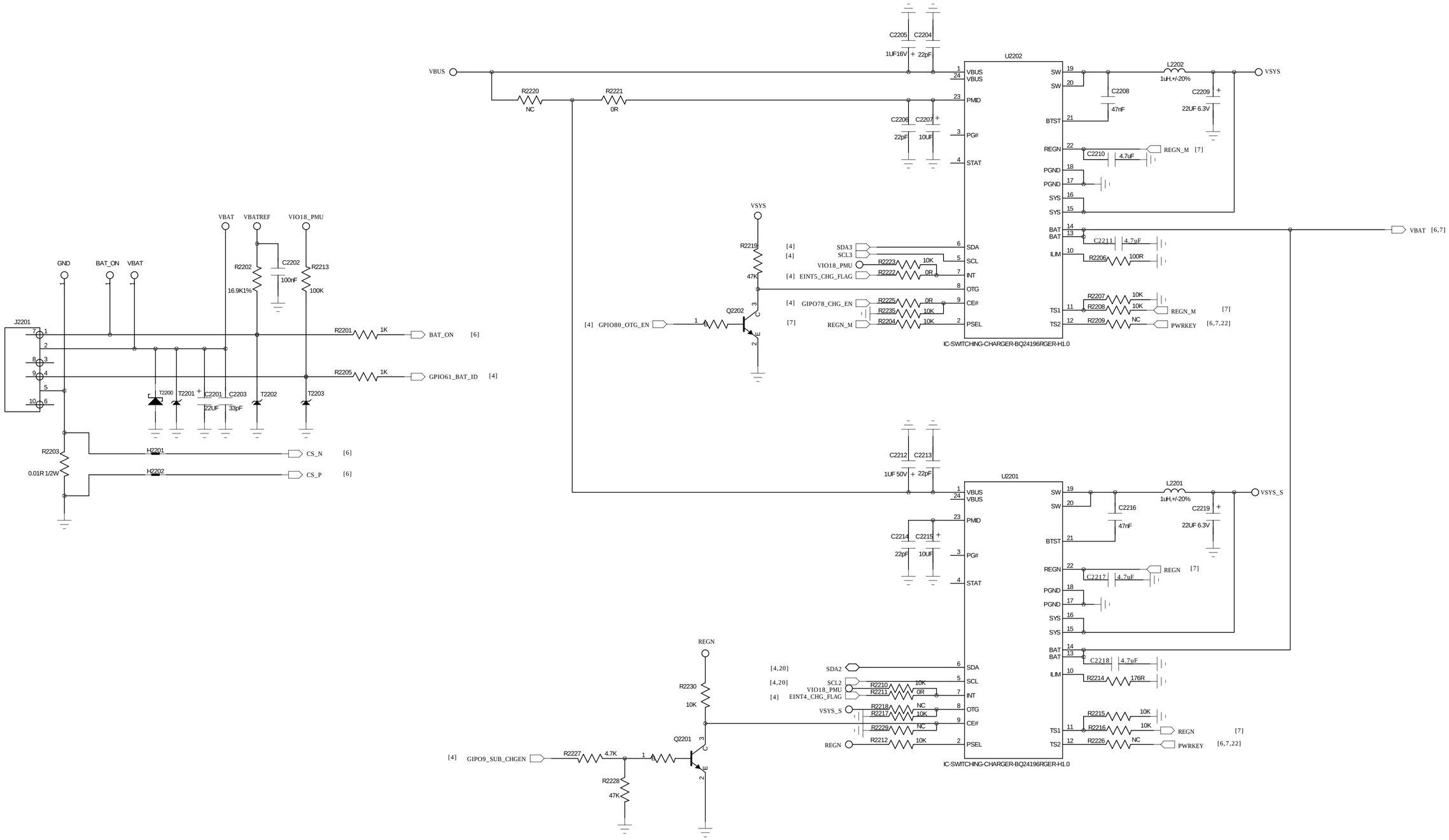

COMPANY: Shanghai ReallyTek Information Technology Co.,Ltd		MODEL: H537	Modified Date: 2016-6-16
DRAWN YQY	DATED 20160321	TITLE: 22_POWER_CHG	VERSION: V1.3 / SHEET: 7 OF 22
CHECKED < >	DATED < >		

REVISION RECORD			
LTR	ECO NO:	APPROVED:	DATE:

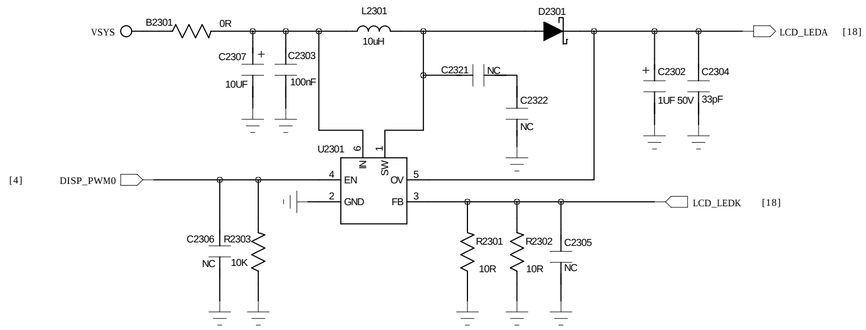

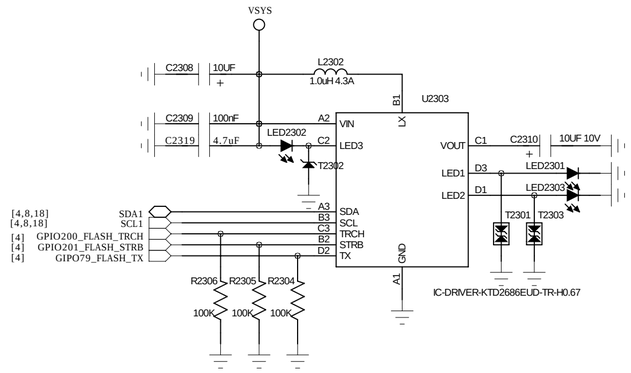

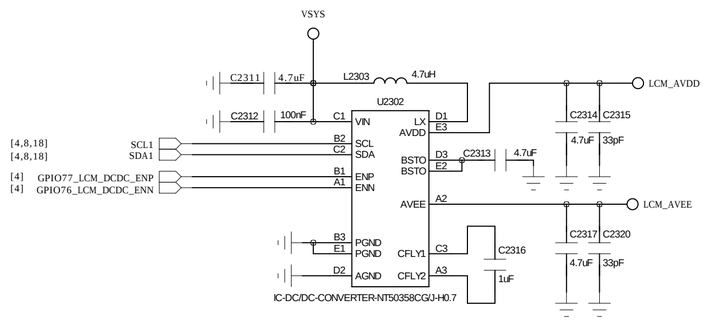

COMPANY: Shanghai ReallyTek Information Technology Co.,Ltd				MODEL: H537	Modified Date: 2016-6-16
DRAWN	YQY	DATED	20160321	TITLE: 23_POWER_THIRD-PARTY_I	VERSION: V1.3 / SHEET: 8 OF 22
CHECKED	< >	DATED	< >		

REVISION RECORD			
LTR	ECO NO:	APPROVED:	DATE:

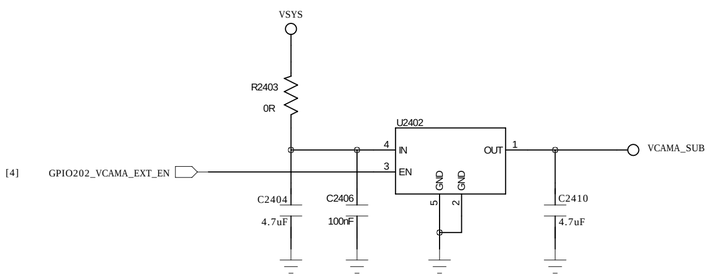

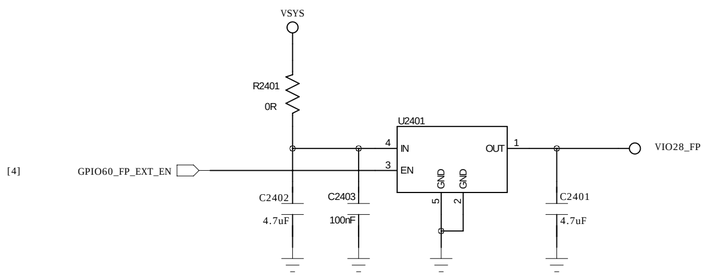

COMPANY: Shanghai ReallyTek Information Technology Co.,Ltd				MODEL: H537	Modified Date: 2016-6-16
DRAWN	YQY	DATED	20160321	TITLE: 24_POWER_THIRD-PARTY_II	VERSION: V1.3 / SHEET: 9 OF 22
CHECKED	< >	DATED	< >		

REVISION RECORD			
LTR	ECO NO:	APPROVED:	DATE:

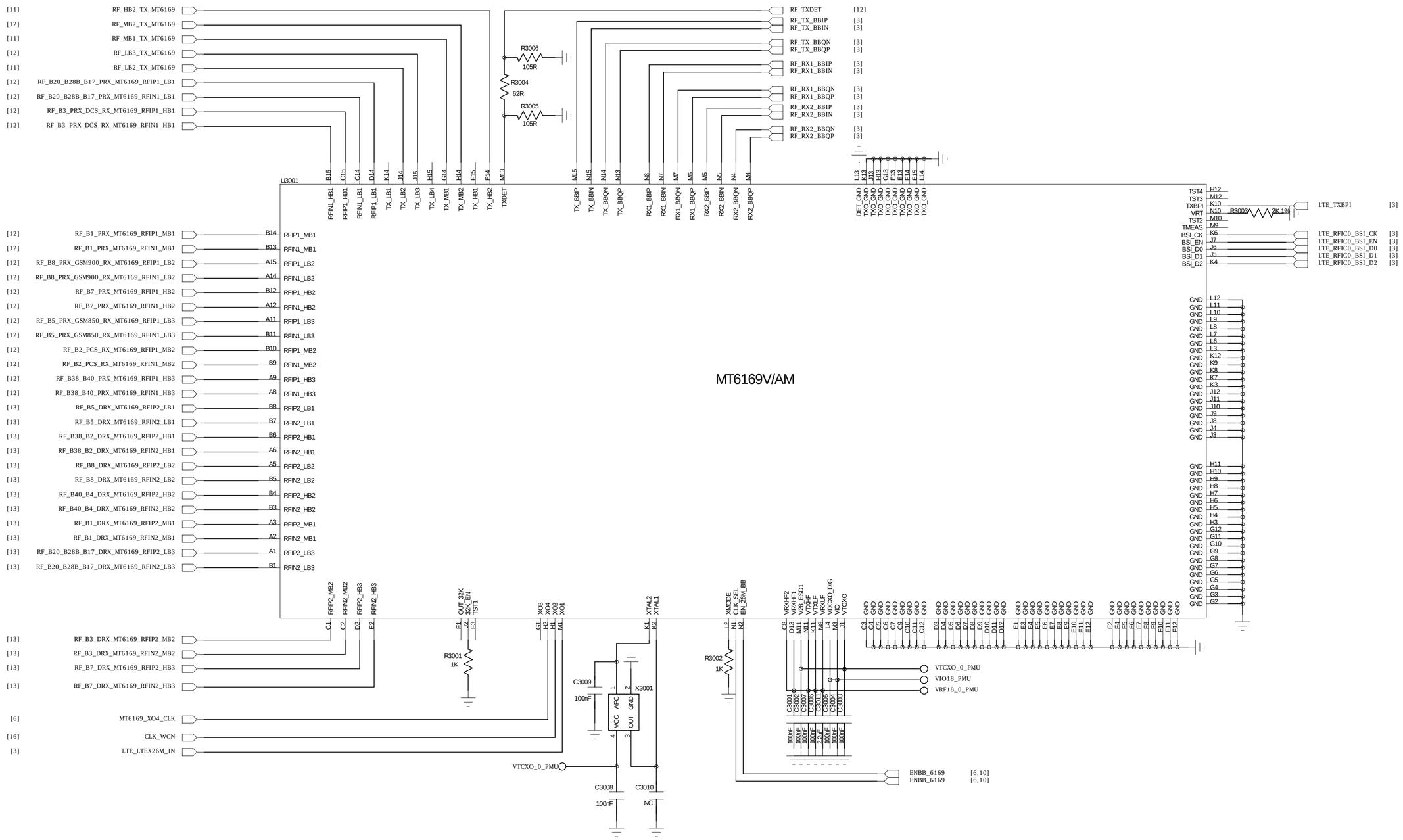

COMPANY: Shanghai ReallyTek Information Technology Co.,Ltd				MODEL: H537	Modified Date: 2016-6-16
DRAWN	YQY	DATED	20160321	TITLE: 30_RF_MT6169_PIN_OUT	VERSION: V1.3 / SHEET: 10 OF 22
CHECKED	< >	DATED	< >		

REVISION RECORD			
LTR	ECO NO:	APPROVED:	DATE:

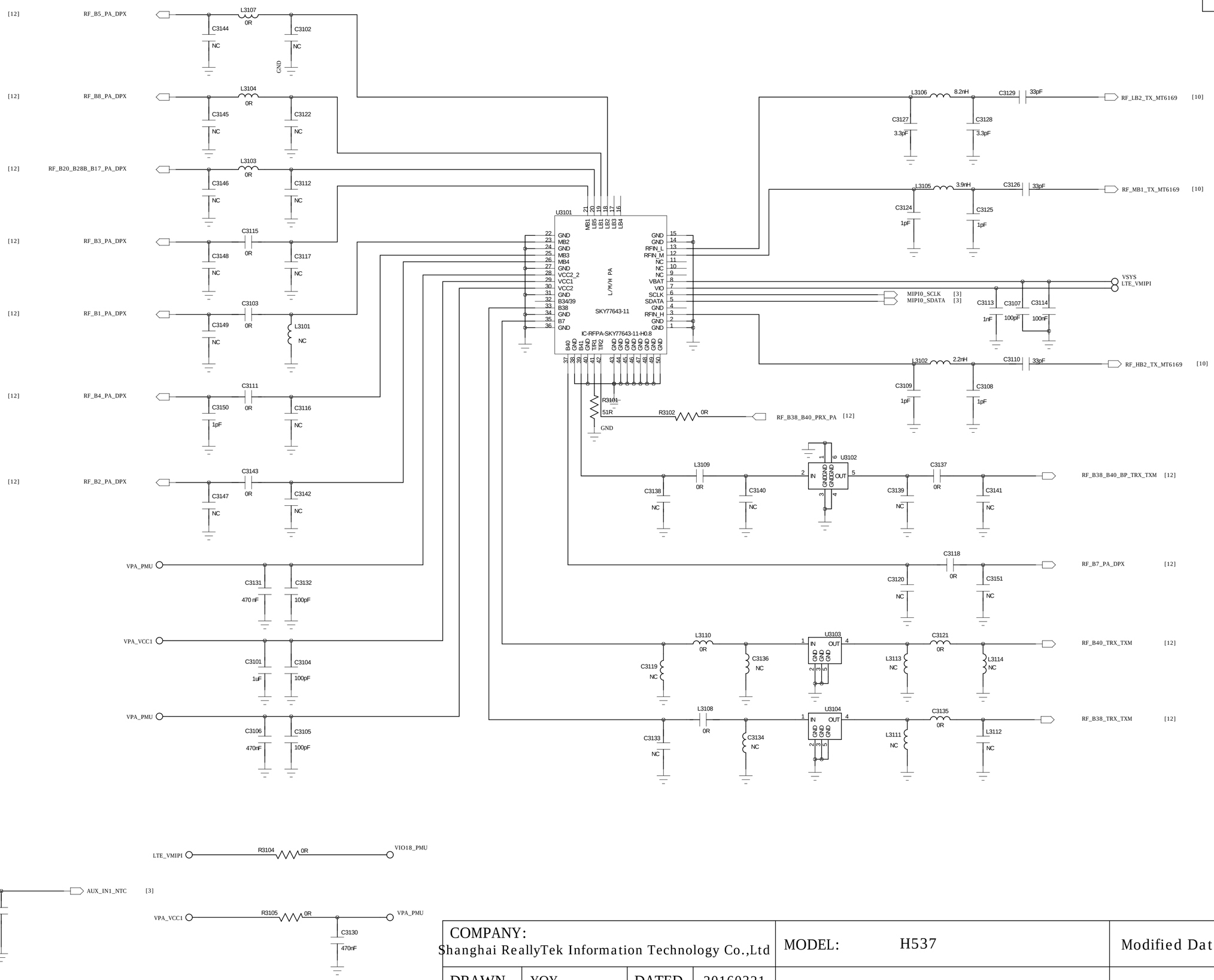

COMPANY: Shanghai ReallyTek Information Technology Co.,Ltd		MODEL: H537	Modified Date: 2016-6-16
DRAWN YQY	DATED 20160321	TITLE: 31_RF_MT6169_RF_TX	VERSION: V1.3
CHECKED < >	DATED < >		SHEET: 11 OF 22

REVISION RECORD			
LTR	ECO NO:	APPROVED:	DATE:

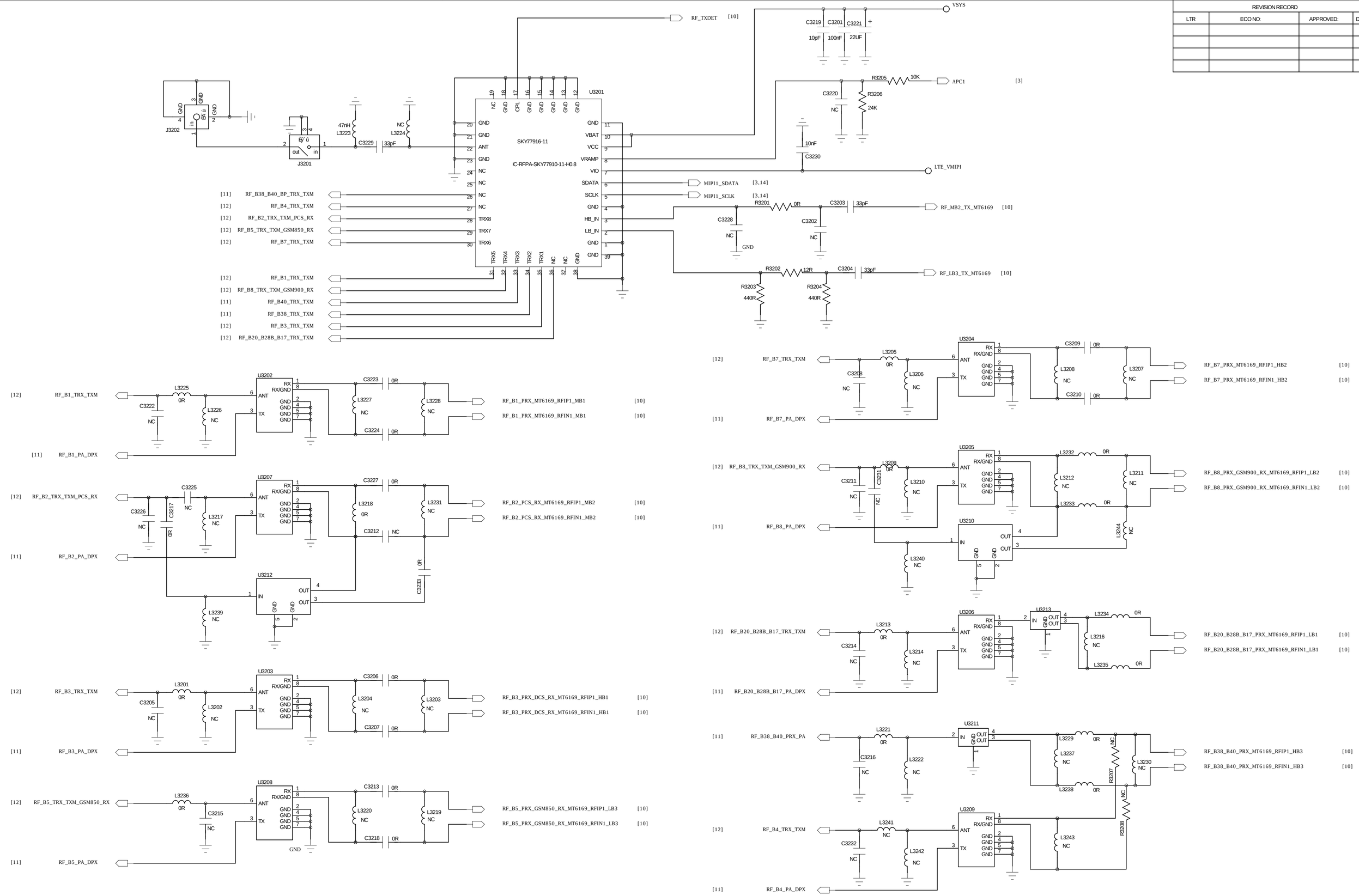

COMPANY: Shanghai ReallyTek Information Technology Co.,Ltd		MODEL: H537	Modified Date: 2016-6-16
DRAWN YQY	DATED 20160321	TITLE: 32_RF_MT6169_RF_PRX	VERSION: V1.3
CHECKED < >	DATED < >		SHEET: 12 OF 22

REVISION RECORD			
LTR	ECO NO:	APPROVED:	DATE:

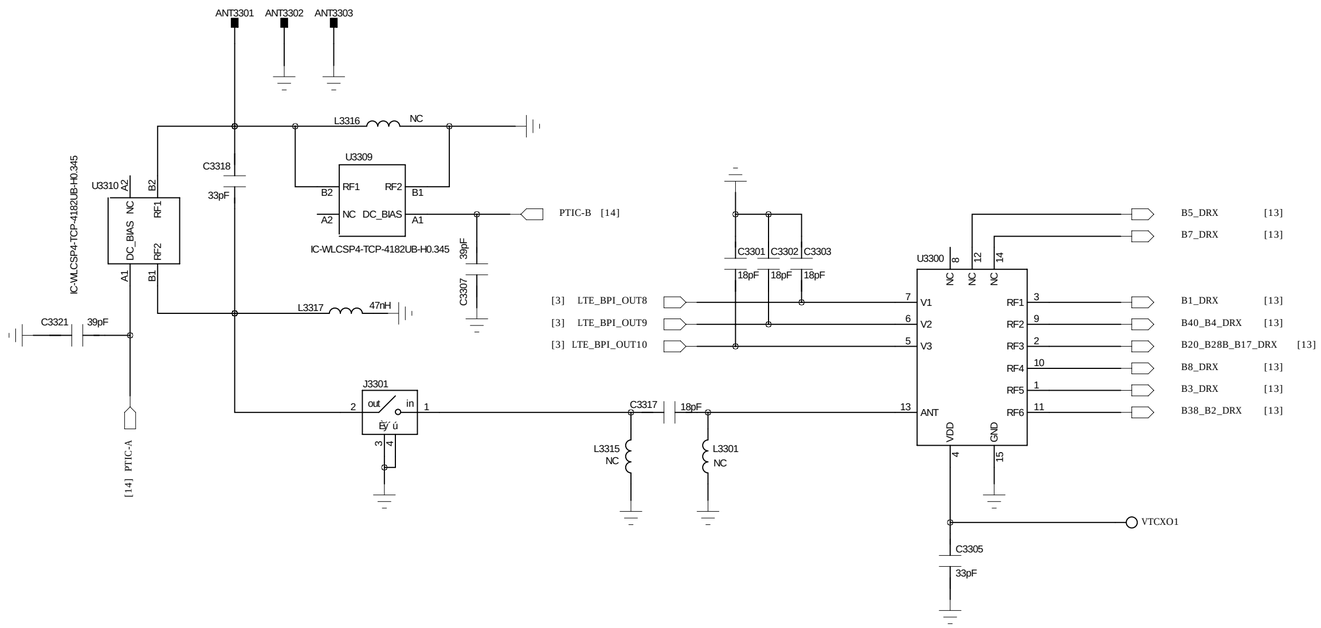

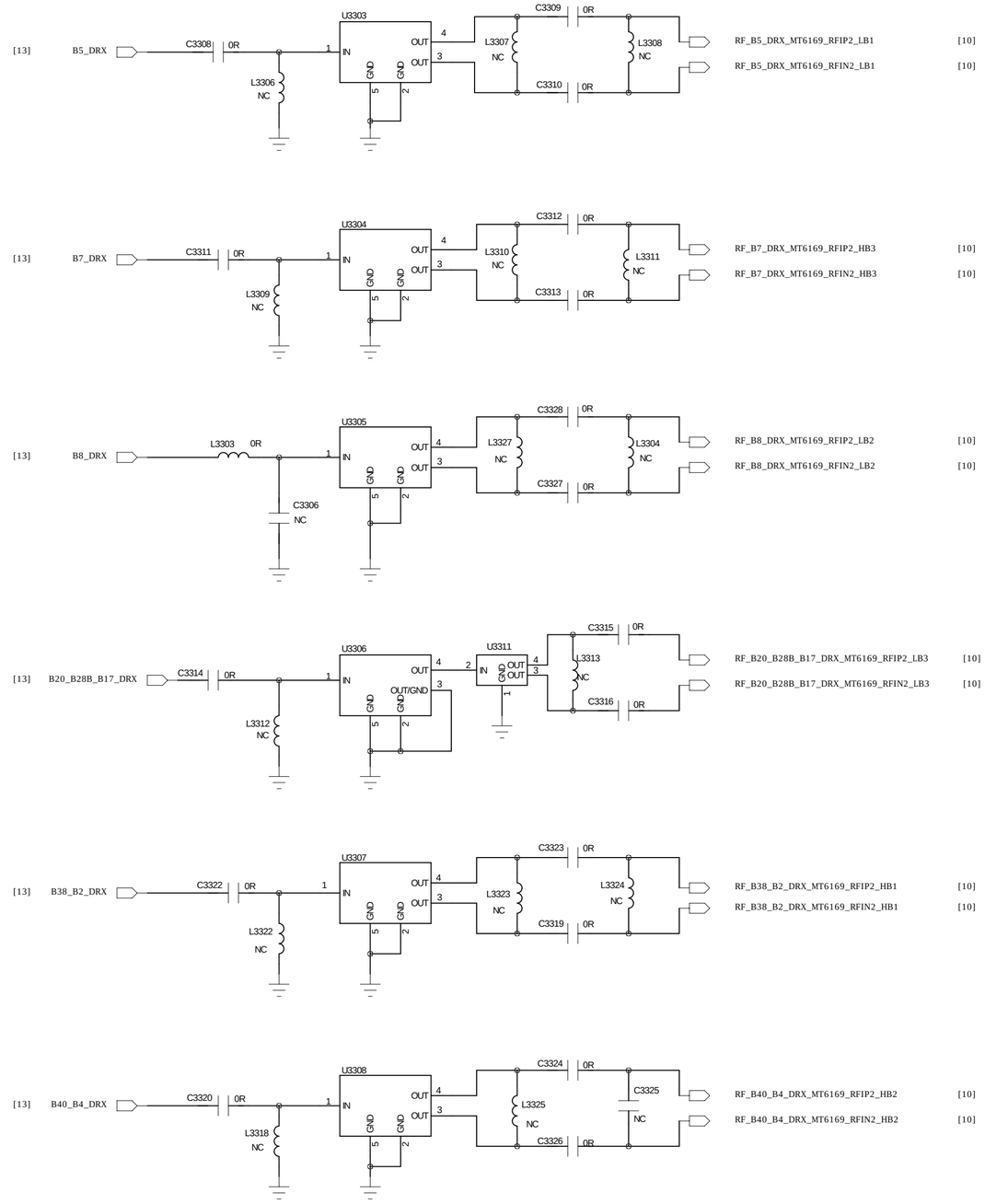

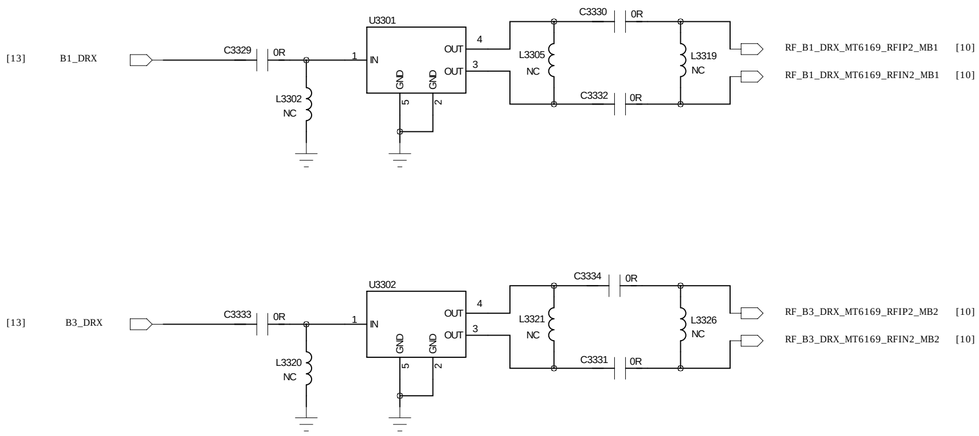

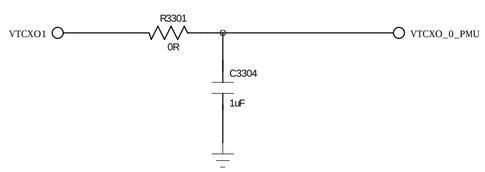

COMPANY: Shanghai ReallyTek Information Technology Co.,Ltd				MODEL: H537	Modified Date: 2016-6-16	
DRAWN	YQY	DATED	20160321	TITLE: 33_RF_MT6169_RF_DRX	VERSION: V1.3	SHEET: 13 OF 22
CHECKED	< >	DATED	< >			

REVISION RECORD			
LTR	ECO NO:	APPROVED:	DATE:

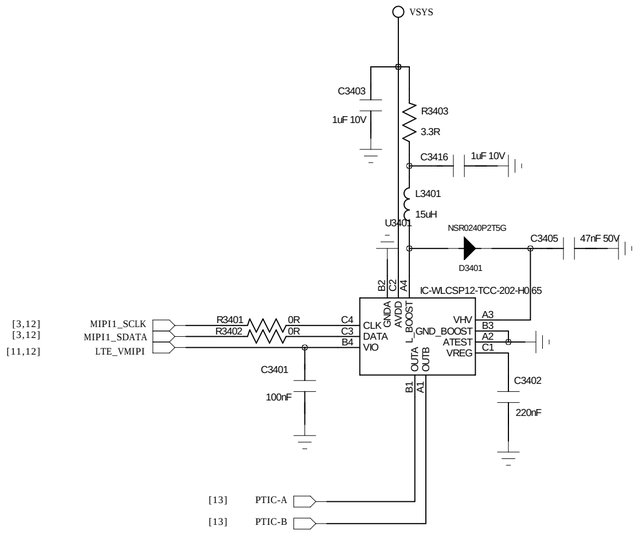

COMPANY: Shanghai ReallyTek Information Technology Co.,Ltd				MODEL: H537	Modified Date: 2016-6-16
DRAWN	YQY	DATED	20160321	TITLE: 34_ANT_CONTROLLER	VERSION: V1.3 / SHEET: 14 OF 22
CHECKED	< >	DATED	< >		

REVISION RECORD			
LTR	ECO NO:	APPROVED:	DATE:

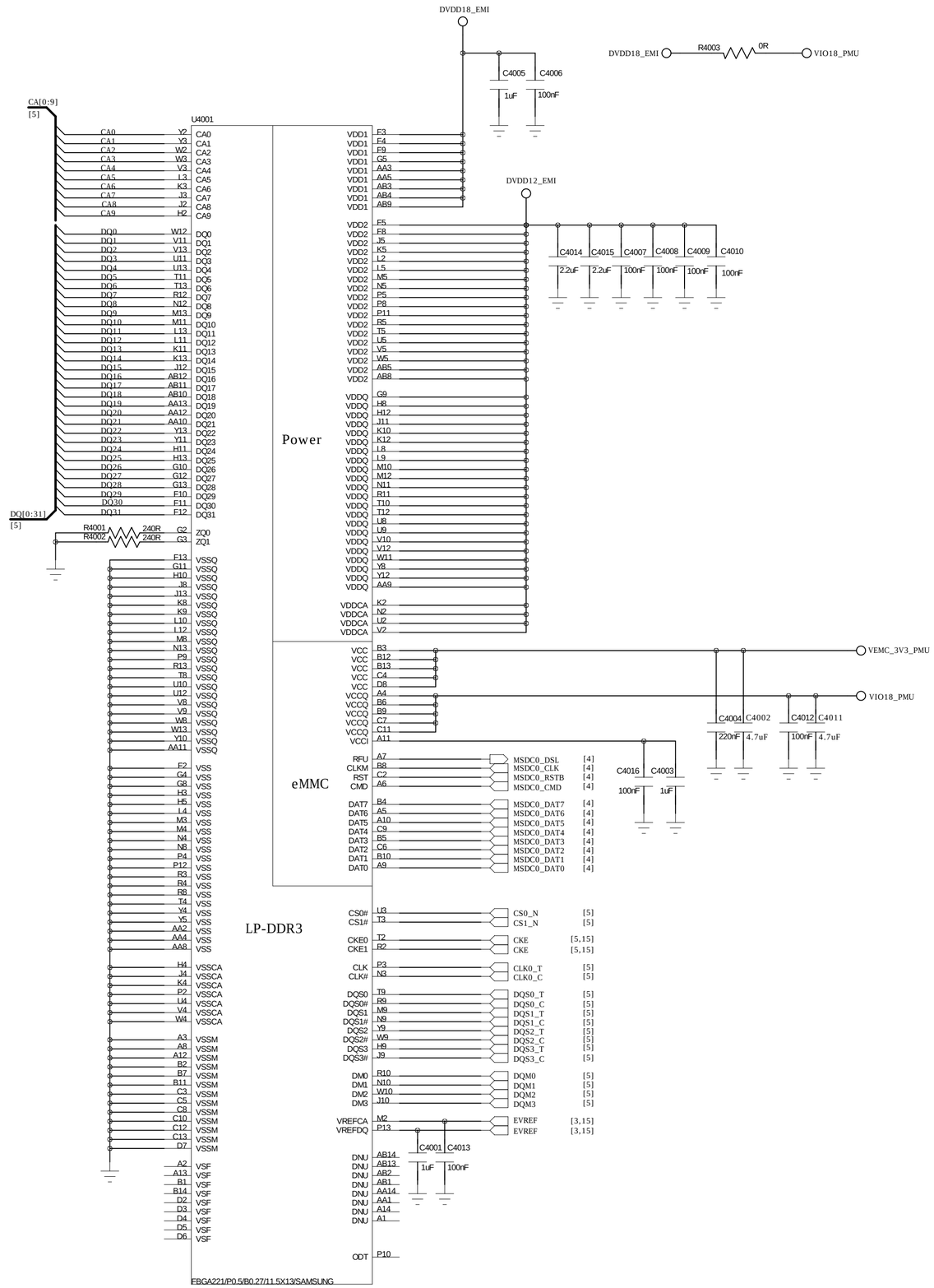

COMPANY: Shanghai ReallyTek Information Technology Co.,Ltd		MODEL: H537	Modified Date: 2016-6-16
DRAWN YQY	DATED 20160321	TITLE: 40_MEMORY_EMMC_LPDDR3	VERSION: V1.3 / SHEET: 15 OF 22
CHECKED < >	DATED < >		

REVISION RECORD			
LTR	ECO NO:	APPROVED:	DATE:

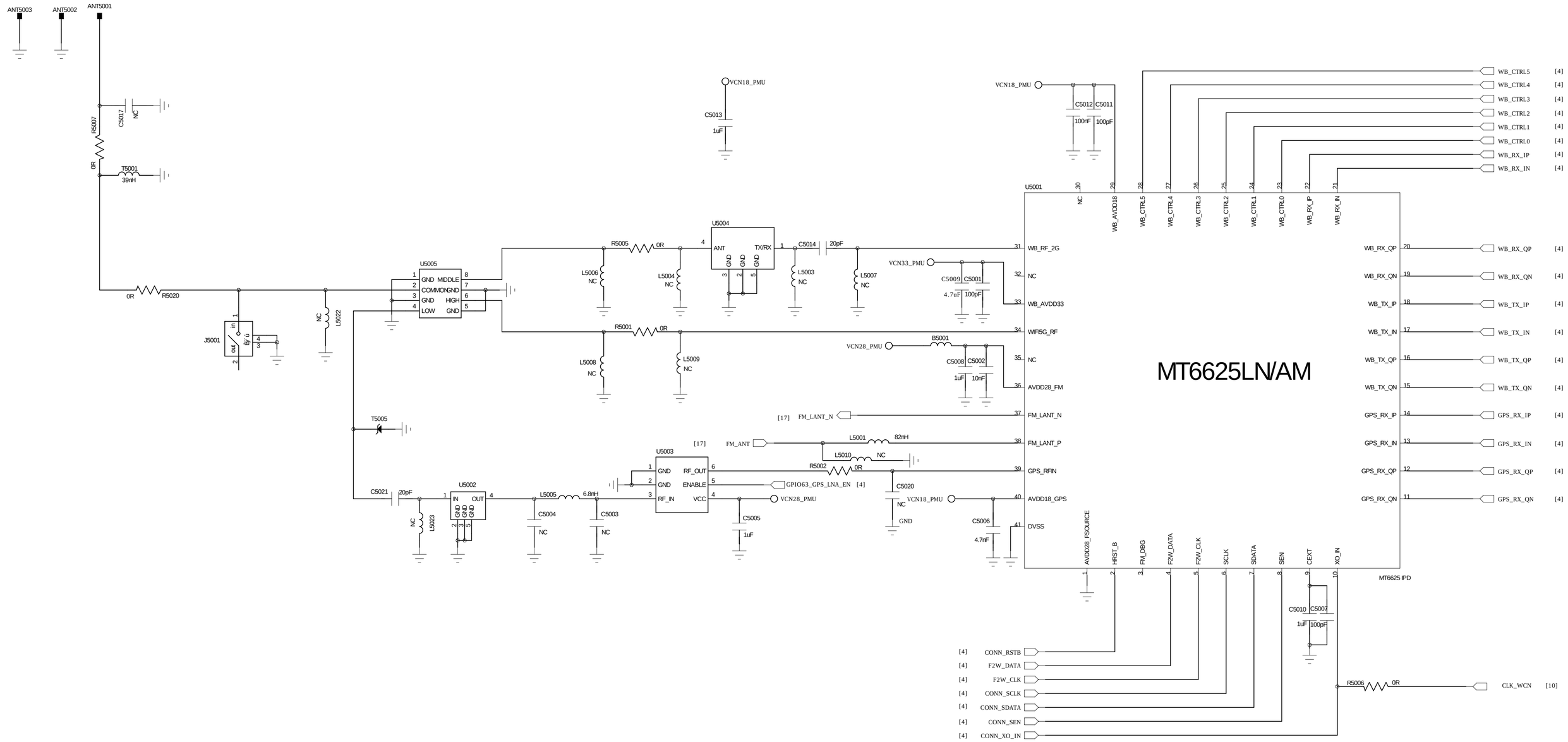

COMPANY: Shanghai ReallyTek Information Technology Co.,Ltd				MODEL: H537	Modified Date: 2016-6-16
DRAWN	YQY	DATED	20160321	TITLE: 50_MT6625_CONNECTIVITY	VERSION: V1.3 / SHEET: 16 OF 22
CHECKED	< >	DATED	< >		

REVISION RECORD			
LTR	ECO NO:	APPROVED:	DATE:

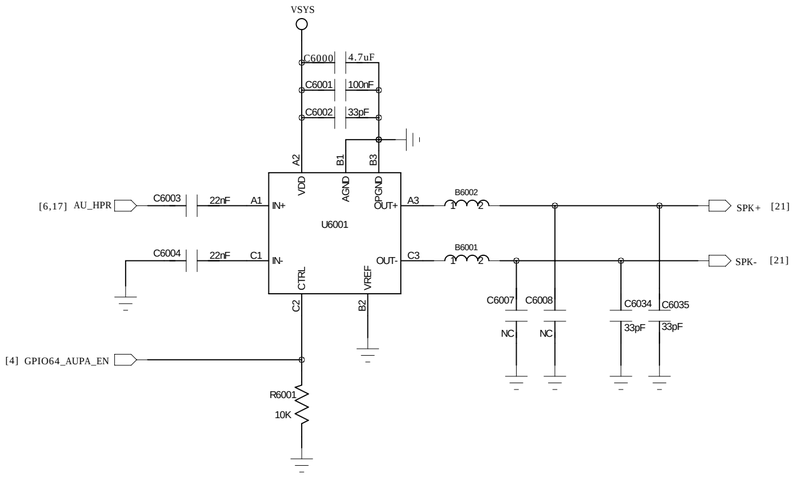

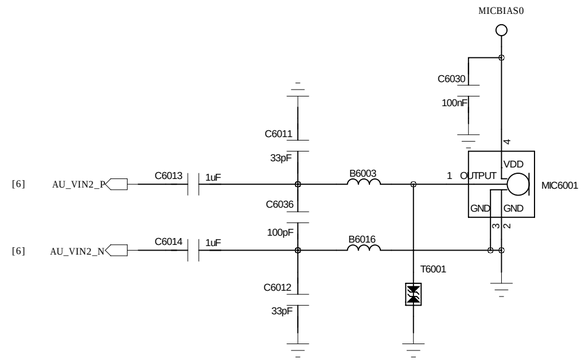

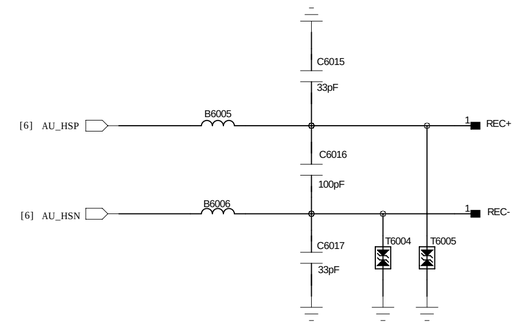

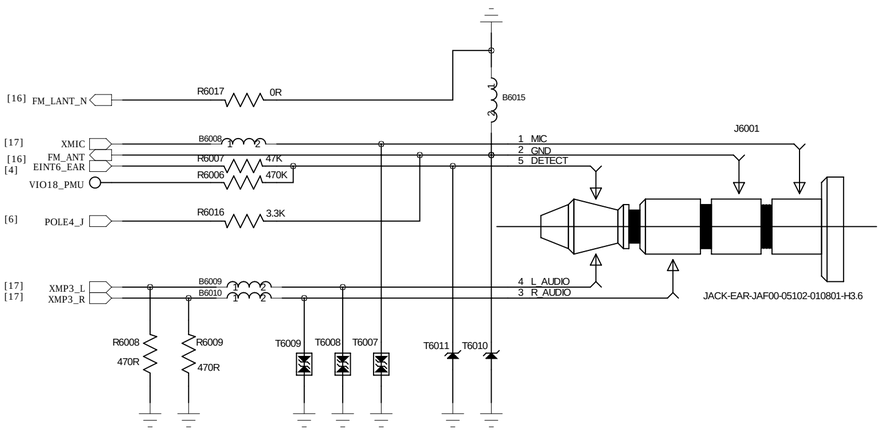

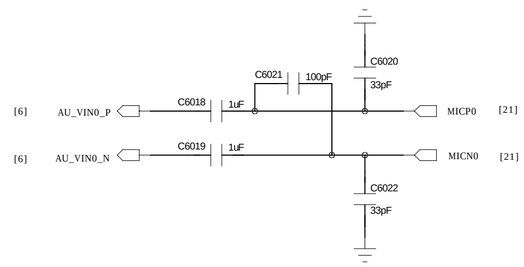

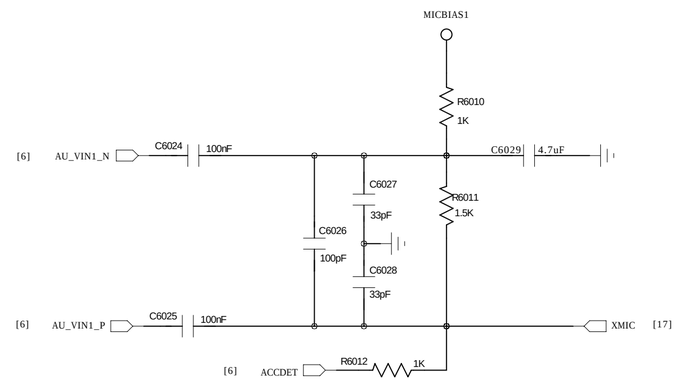

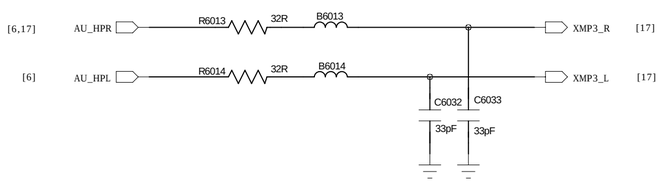

COMPANY: Shanghai ReallyTek Information Technology Co.,Ltd				MODEL: H537	Modified Date: 2016-6-16
DRAWN	YQY	DATED	20160321	TITLE: 60_PERI_AUDIO	VERSION: V1.3 / SHEET: 17 OF 22
CHECKED	< >	DATED	< >		

REVISION RECORD			
LTR	ECO NO:	APPROVED:	DATE:

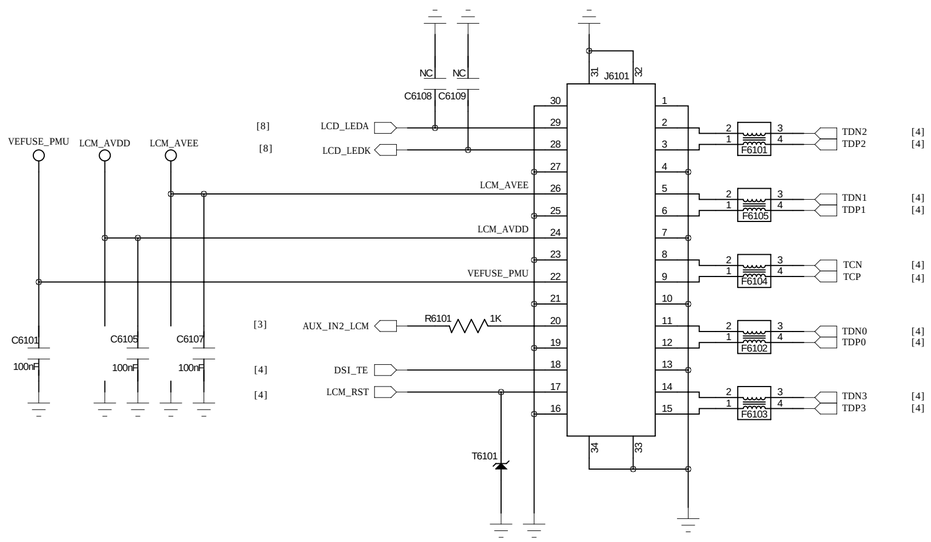

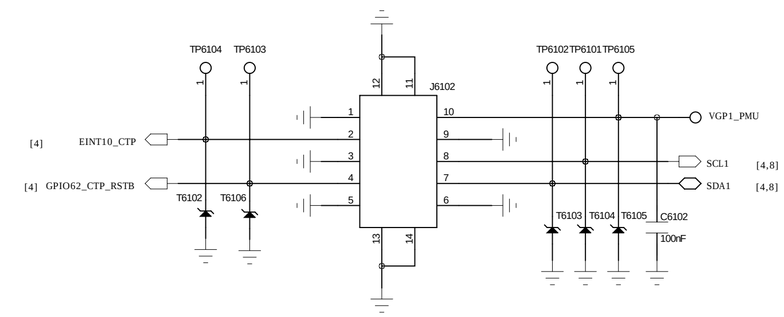

COMPANY: Shanghai ReallyTek Information Technology Co.,Ltd				MODEL: H537	Modified Date: 2016-6-16
DRAWN	YQY	DATED	20160321	TITLE: 61_PERI_LCD/CTP	VERSION: V1.3 / SHEET: 18 OF 22
CHECKED	< >	DATED	< >		

REVISION RECORD			
LTR	ECO NO:	APPROVED:	DATE:

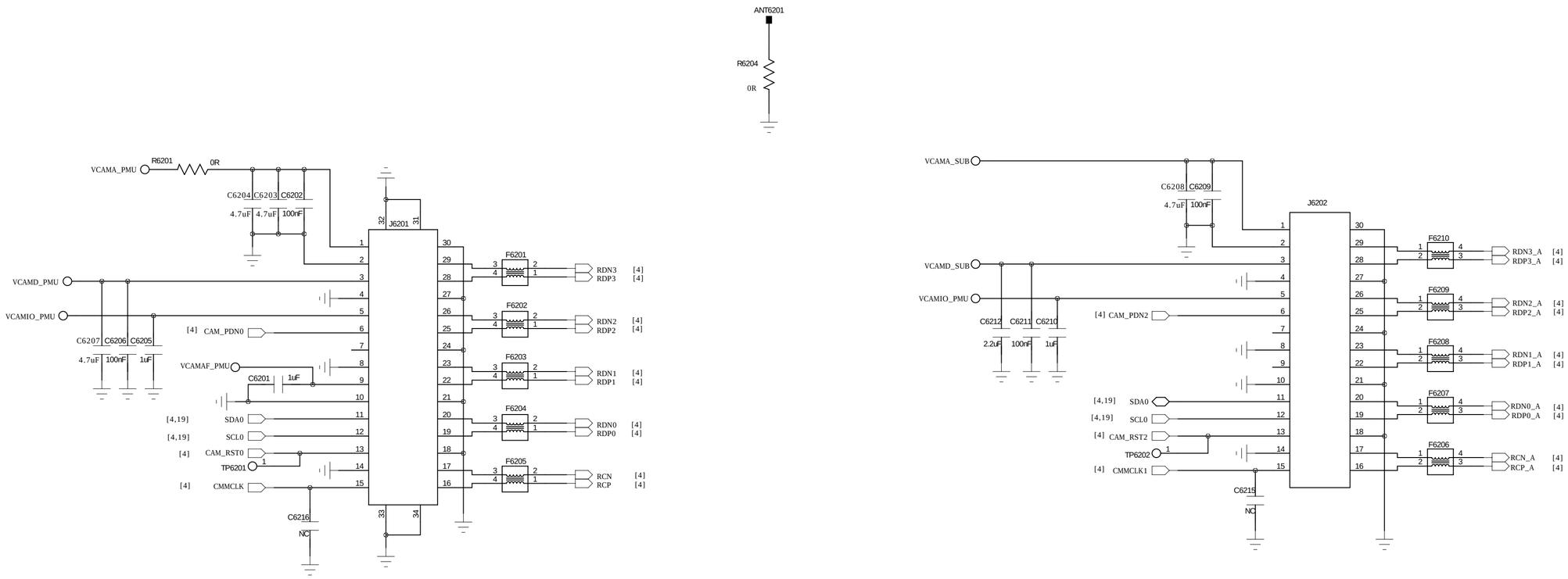

COMPANY: Shanghai ReallyTek Information Technology Co.,Ltd				MODEL: H537	Modified Date: 2016-6-16
DRAWN	YQY	DATED	20160321	TITLE: 62_PERI_CAMERA	VERSION: V1.3 / SHEET: 19 OF 22
CHECKED	< >	DATED	< >		

REVISION RECORD			
LTR	ECO NO:	APPROVED:	DATE:

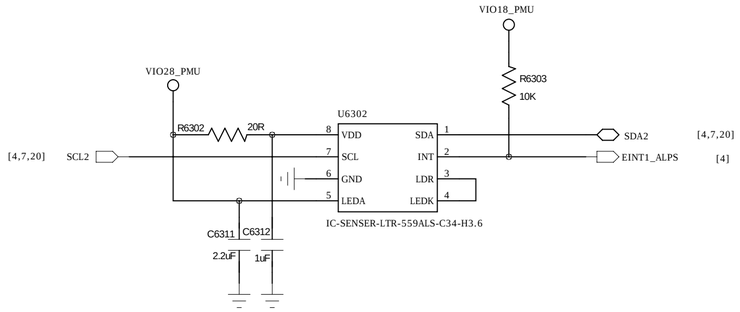

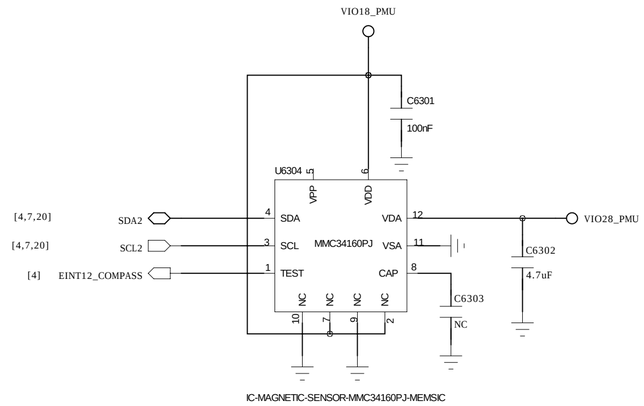

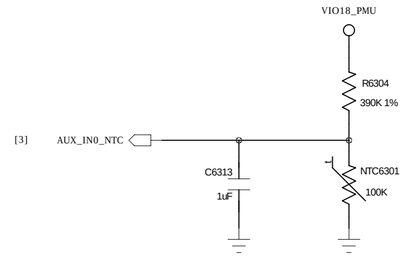

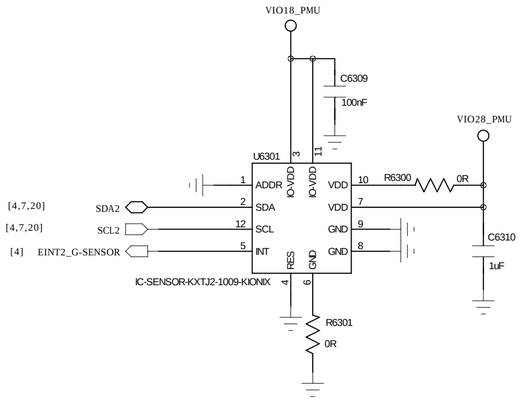

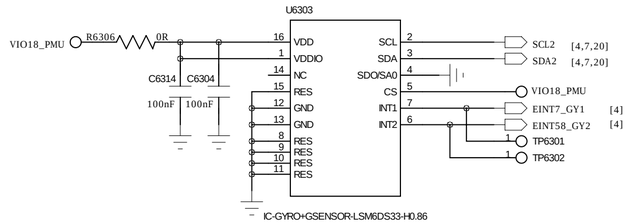

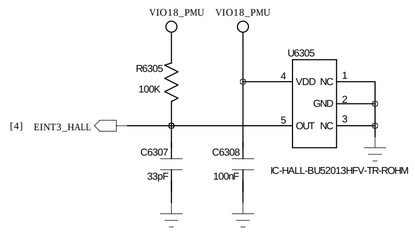

COMPANY: Shanghai ReallyTek Information Technology Co.,Ltd				MODEL: H537	Modified Date: 2016-6-16
DRAWN	YQY	DATED	20160321	TITLE: 63_PERI_SENSORS	VERSION: V1.3 / SHEET: 20 OF 22
CHECKED	< >	DATED	< >		

REVISION RECORD			
LTR	ECO NO:	APPROVED:	DATE:

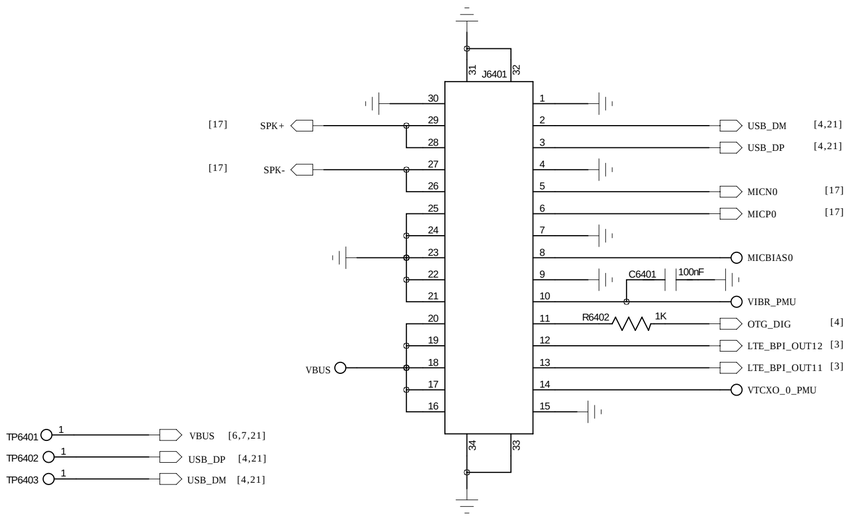

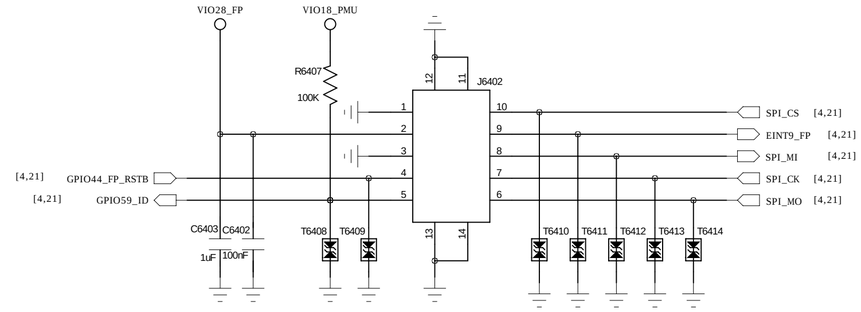

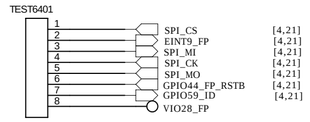

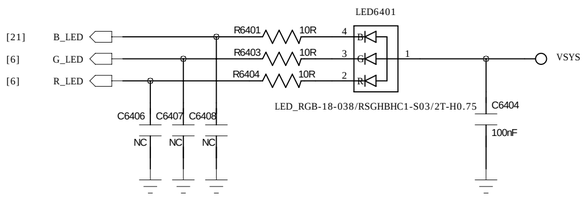

COMPANY: Shanghai ReallyTek Information Technology Co.,Ltd				MODEL: H537	Modified Date: 2016-6-16
DRAWN	YQY	DATED	20160321	TITLE: 64_PERI_EXCH/FP/RGB-LEDS	VERSION: V1.3 / SHEET: 21 OF 22
CHECKED	< >	DATED	< >		

REVISION RECORD			
LTR	ECO NO:	APPROVED:	DATE:

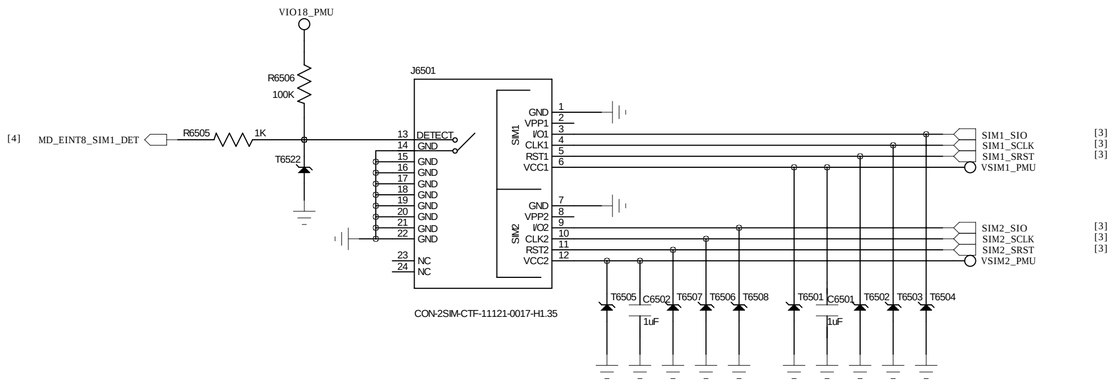

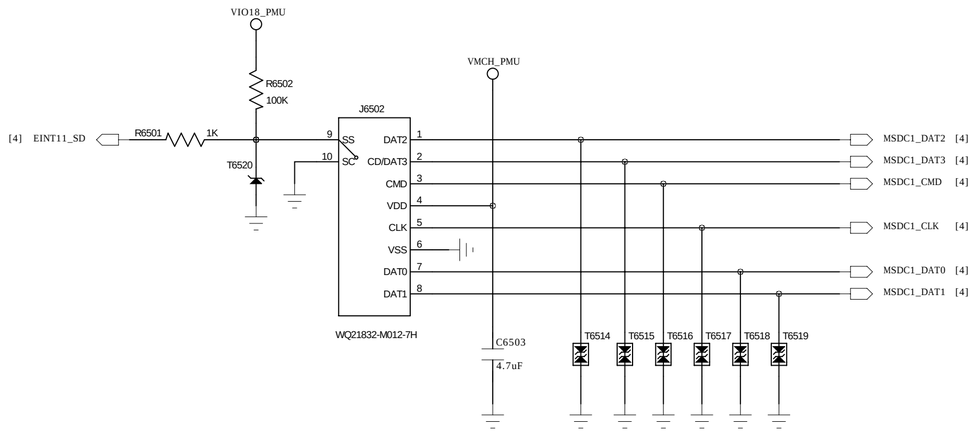

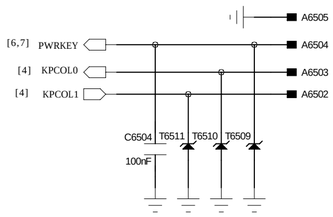

COMPANY: Shanghai ReallyTek Information Technology Co.,Ltd				MODEL: H537	Modified Date: 2016-6-16
DRAWN	YQY	DATED	20160321	TITLE: 65_PER_SIM/TF/KEYPAD	VERSION: V1.3 / SHEET: 22 OF 22
CHECKED	< >	DATED	< >		