SAMSUNG CONFIDENTIAL
THIS DOCUMENT CONTAINS CONFIDENTIAL
PROPRIETARY INFORMATION THAT IS
SAMSUNG ELECTRONICS CO'S PROPERTY.
DO NOT DISCLOSE TO OR DUPLICATE FOR OTHERS
EXCEPT AS AUTHORIZED BY SAMSUNG.

A54 5G SM-A546B

2022.12

Sheet01 : GSM / WCDMA / LTE / NR(N41) RF
Sheet02 : TRANSCEIVER, SUB ANT
Sheet03 : CONNECTIVITY(BT/WIFI/FM), NFC
Sheet04 : AP(Quartz-INTERFACE,GPIO)
Sheet05 : AP(POWER), MEM(uMCP)
Sheet06 : PMIC/SUB PMIC, IF PMIC, DC IC
Sheet07 : AUDIO AMP, SENSOR, SIM, SD
Sheet08 : CAMERA
Sheet09 : DISPLAY PMIC, C2C

Engineer:			
Drawn by:			
R&D CHK:	TITLE:		Size:
DOC CTRL CHK:	A54		
MFG ENGR CHK:			
Changed by:	Date Changed:	Time Changed:	QA CHK:
REV:	Drawing Number:		Page:

SAMSUNG CONFIDENTIAL
THIS DOCUMENT CONTAINS CONFIDENTIAL
AND PROPRIETARY INFORMATION OF
SAMSUNG ELECTRONICS CO'S PROPERTY.
DO NOT DISCLOSE TO OR DUPLICATE FOR OTHERS
EXCEPT AS AUTHORIZED BY SAMSUNG.

RF PART 1

MAIN ANT1

LB

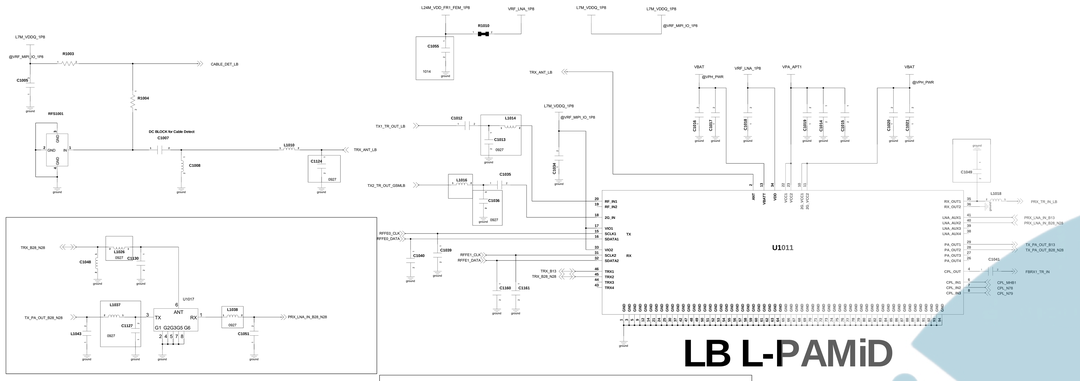

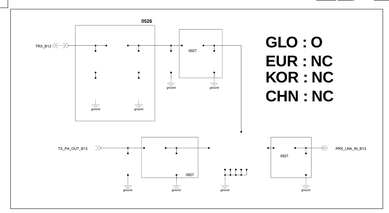

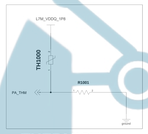

MAIN ANT2

MHB, n77/78_DRX, n79_PRX MIMO

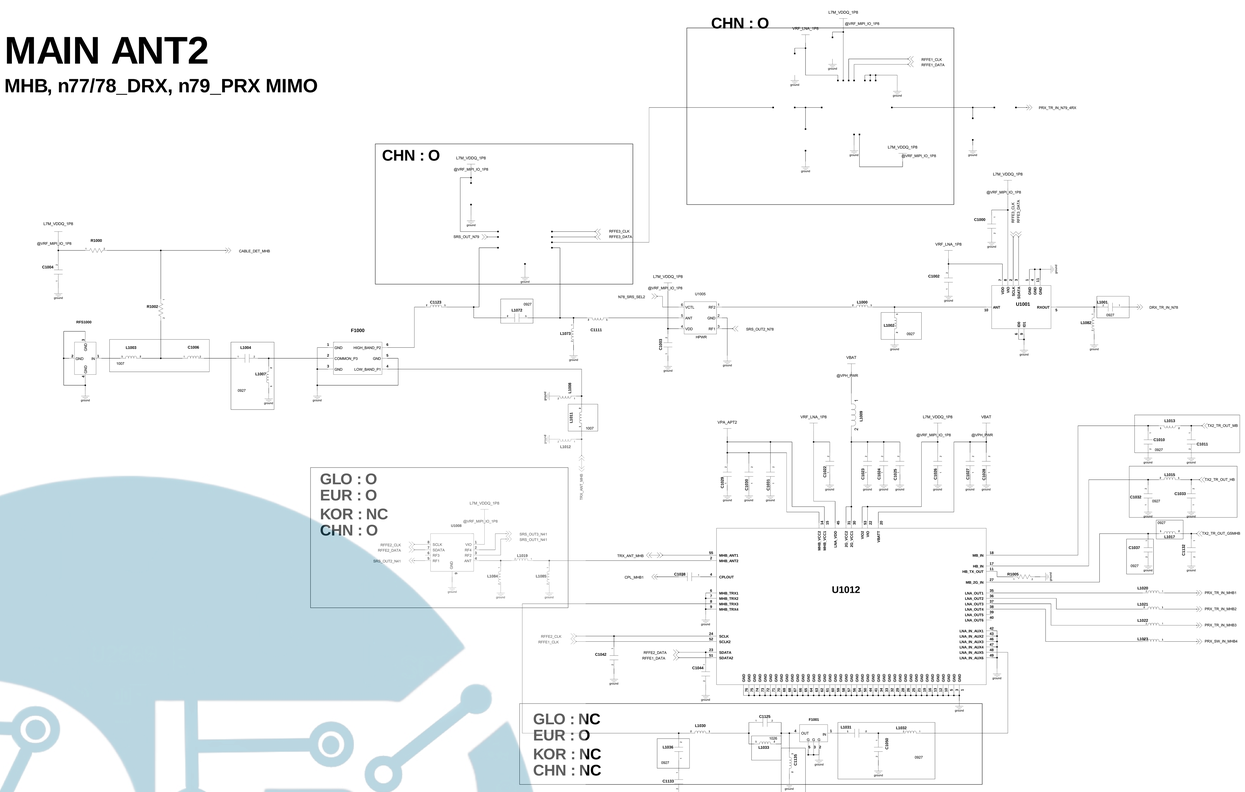

SUB ANT1

LB DRX

Side

Front

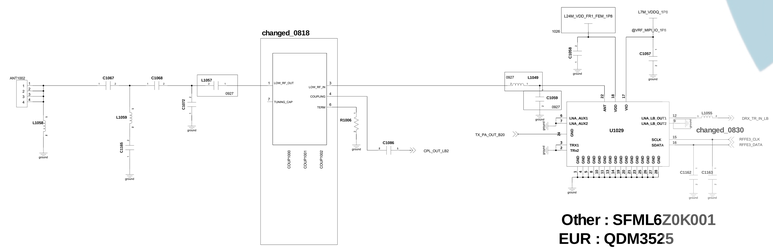

Other : SFML6Z0K001
EUR : QDM3525

Side

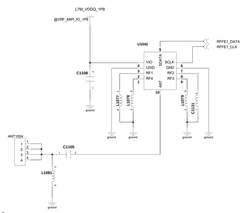

SUB ANT2

MHB DRX,GPS L1

Side

Side

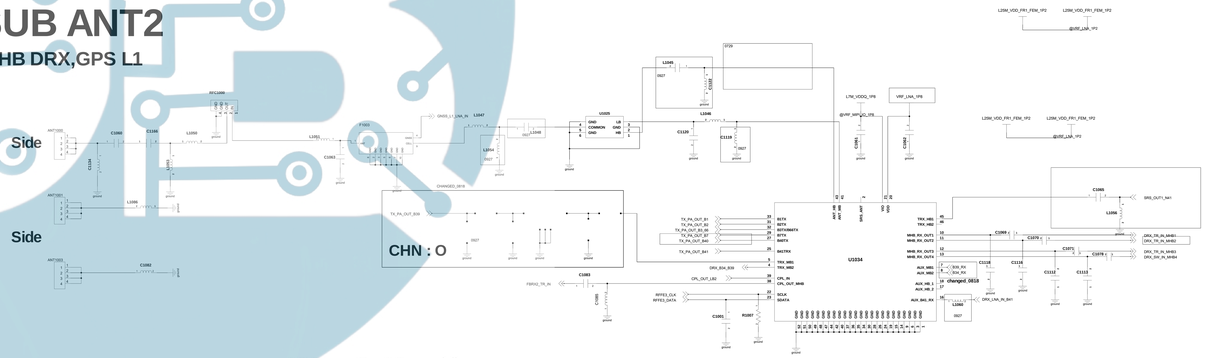

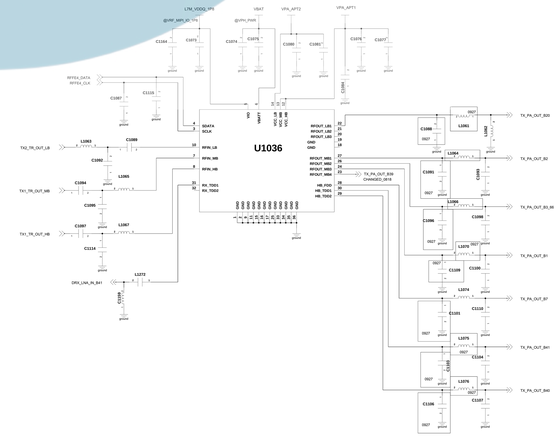

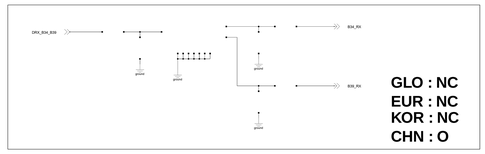

B34 / B39 RX

Engineer:	A54
Drawn by:	
R&D Chk:	Size:
DOC CTRL Chk:	TITLE: RF PAM/FEM
MFG ENGR Chk:	
QA Chk:	REV: Drawing Number:

Changed by: | Date Changed: | Time Changed:

SAMSUNG CONFIDENTIAL
THIS DOCUMENT CONTAINS CONFIDENTIAL
PROPRIETARY INFORMATION THAT IS
PROPERTY OF SAMSUNG ELECTRONICS.
DO NOT DISCLOSE TO OR DUPLICATE FOR OTHERS
EXCEPT AS AUTHORIZED BY SAMSUNG.

TRANSCEIVER (S5525)

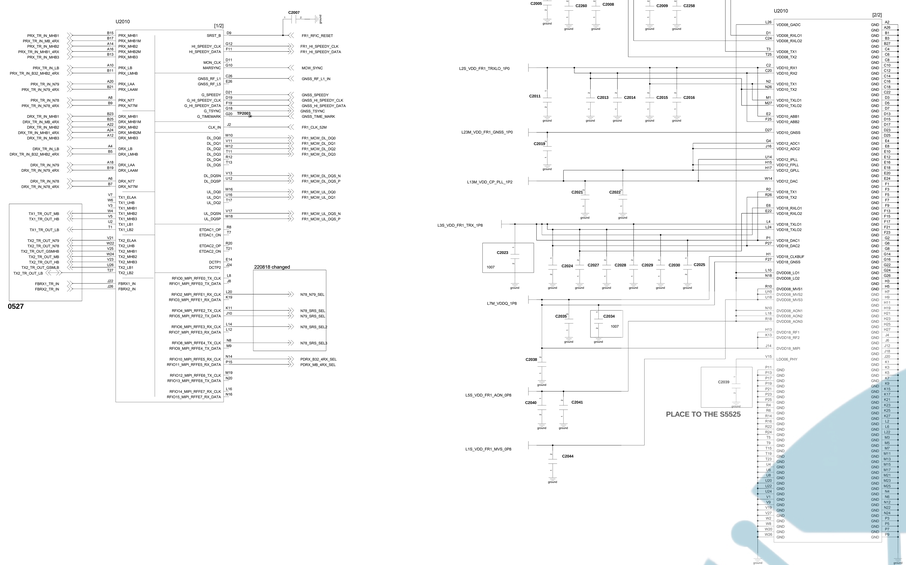

SUB ANT5

MHB PRX MIMO, n77/78 PRX MIMO, WIFI 2.4G

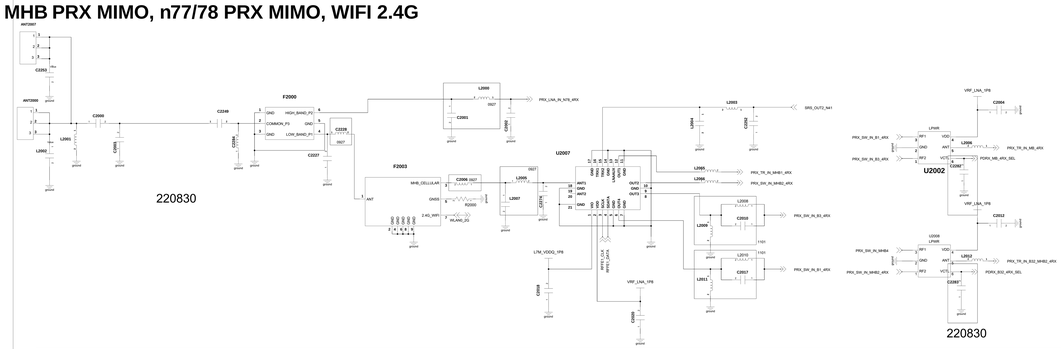

SUB ANT6

HB DRX MIMO

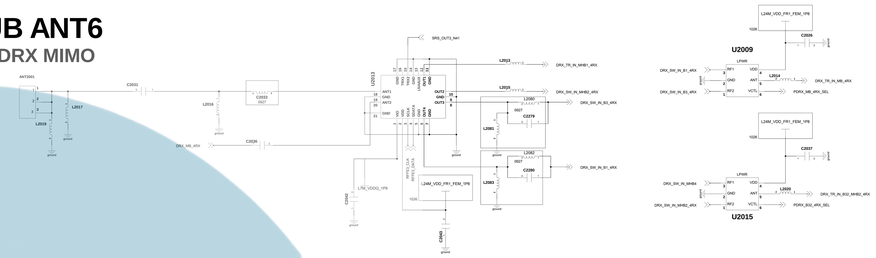

SUB ANT7

MB DRX MIMO

APT1

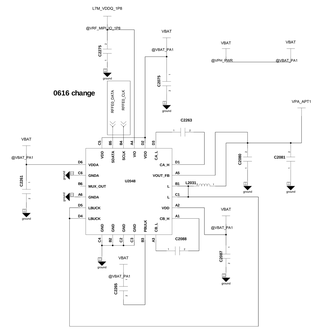

APT2

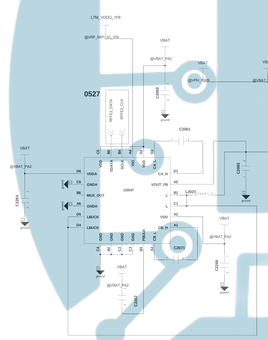

SUB ANT8

N78 DRX MIMO

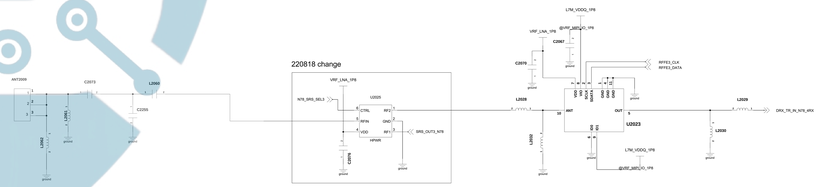

SUB ANT3

N78 TRX

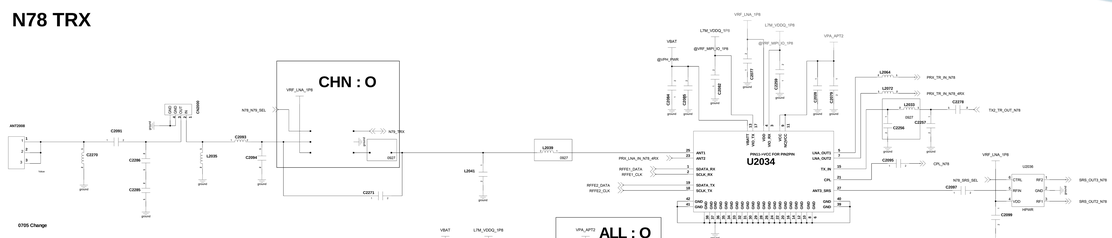

N79 TRX

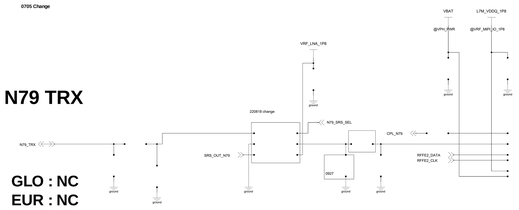

GLO : NC
EUR : NC
KOR : NC
CHN : O

SUB ANT9

WIFI_2.4G+WIFI_5G

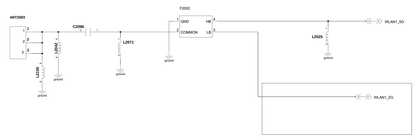

SUB ANT11

n79 DRX MIMO

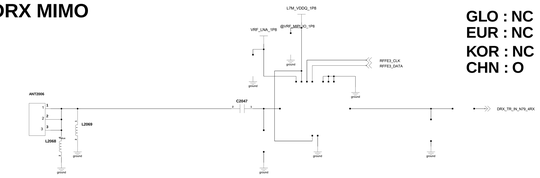

GLO : NC
EUR : NC
KOR : NC
CHN : O

SUB ANT10

N79 DRX

GLO : NC
EUR : NC
KOR : NC
CHN : O

Engineer:	A54
Drawn by:	
R&D CHK:	TITLE: RF TRCV/PAM/APT
IDOC CTRL CHK:	Size:
MFG ENGR CHK:	
Changed by: / Date Changed: / Time Changed: / QA CHK:	REV: / Drawing Number:

SAMSUNG CONFIDENTIAL
THIS DOCUMENT CONTAINS CONFIDENTIAL
PROPRIETARY INFORMATION THAT IS
SAMSUNG ELECTRONICS CO'S PROPERTY.
DO NOT DISCLOSE TO OR DUPLICATE FOR OTHERS
EXCEPT AS AUTHORIZED BY SAMSUNG.

WIFI/BT/FM

WIFI 2.4G - sub5/sub9
WIFI 5G - sub4/sub9

SUB ANT4

WIFI 5G

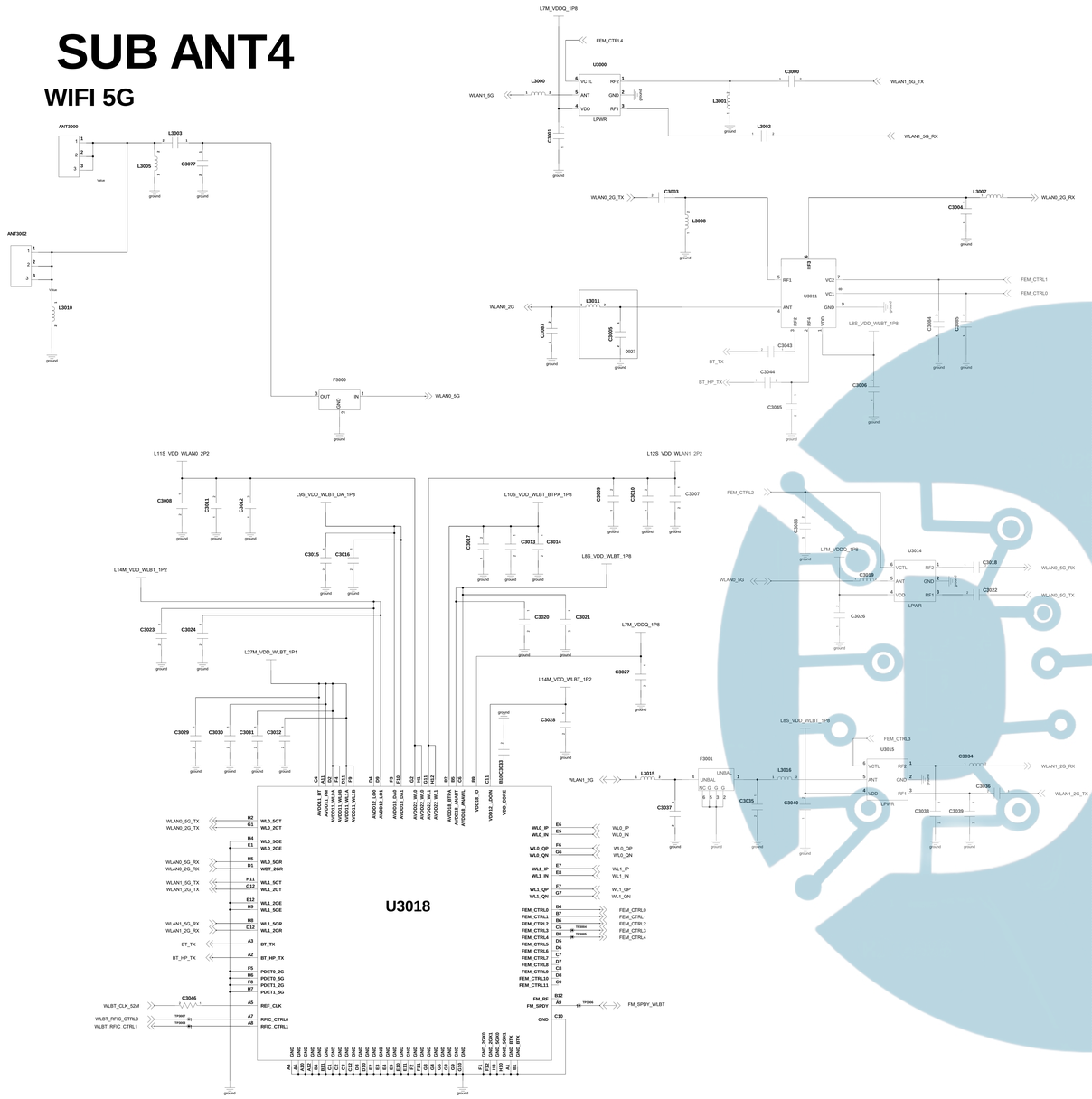

GPS L1 / GNSS/BEIDOU

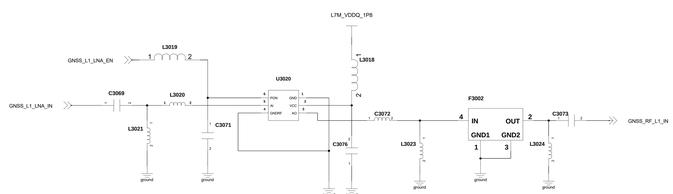

MST KOR : ONLY USE

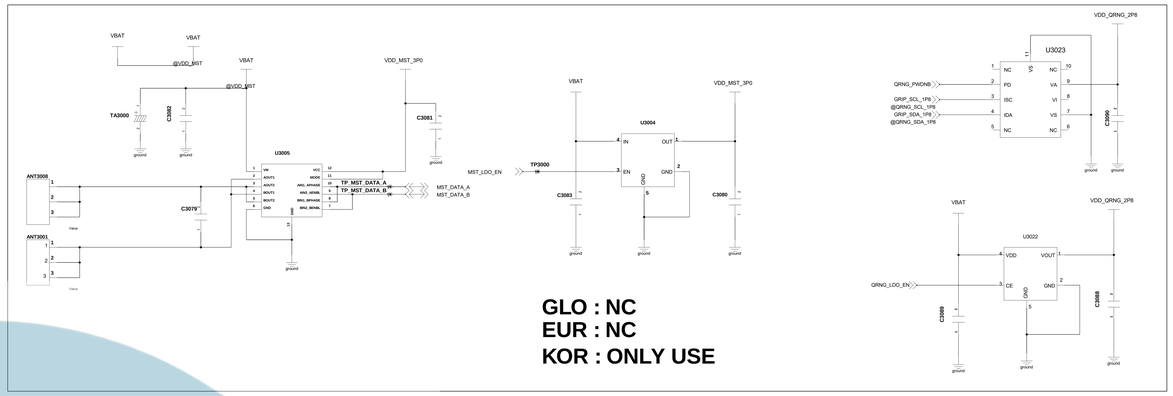

QRNG KOR : ONLY USE

GND CCP

NFC

		NFC IC	#1	#2	#3		Switch IC	ESIM_SIM2_SEL
EUR	2-Nano + eSIM	SN220UV2	OPEN	OPEN	SHORT		SMD	HSD1(H)_SIM2 HSD2(L)_eSIM
KOR/NA	Nano + eSIM	SN220UV2	OPEN	SHORT	SHORT		NC	
JPN(Felica)	Nano + eSIM	SN220PV2	OPEN	SHORT	SHORT		NC	
Other	eSIM X	PN560	SHORT	OPEN	OPEN		NC	
CHN	eSIM X(eSE O)	SN220T	SHORT	OPEN	OPEN		NC	

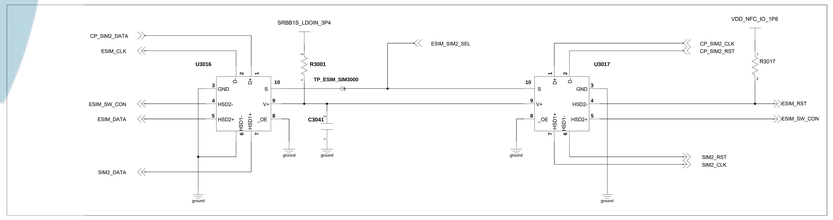

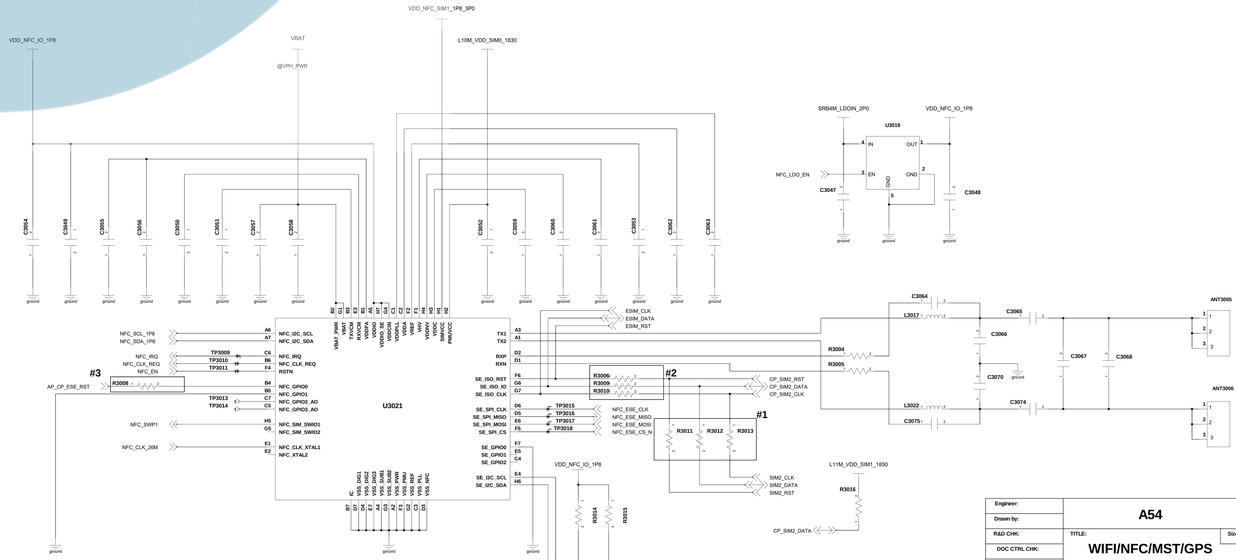

Changed by:	Date Changed:	Time Changed:	QA CHK:	REV:	Drawing Number:	Page:

Engineer:	A54
Drawn by:	
R&D CHK:	TITLE: WIFI/NFC/MST/GPS — Size:
DOC CTRL CHK:	
MFG ENGR CHK:	

SAMSUNG CONFIDENTIAL
THIS DOCUMENT CONTAINS CONFIDENTIAL
PROPRIETARY INFORMATION THAT IS
SAMSUNG ELECTRONICS CO'S PROPERTY
DO NOT DISCLOSE TO OR DUPLICATE FOR OTHERS
EXCEPT AS AUTHORIZED BY SAMSUNG.

Quartz

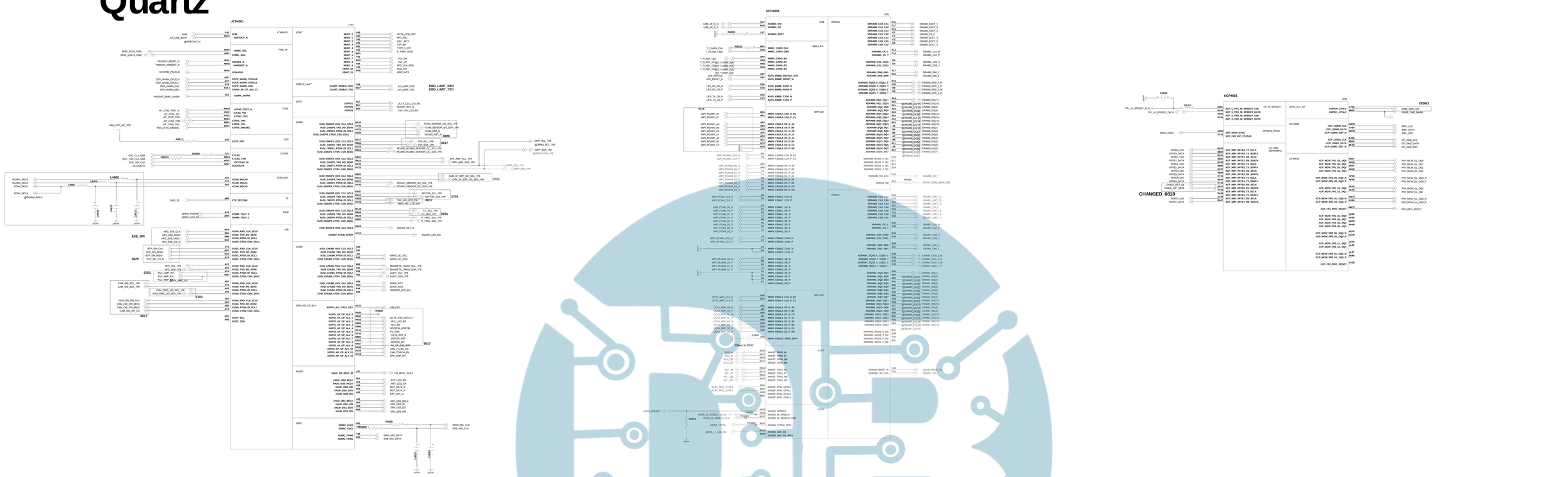

BOOT CONFIGURATIONS

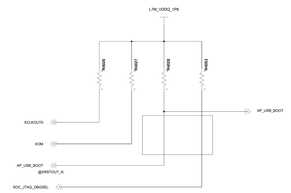

PIN			Function	
XCLKOUT0	XRSTOUT_N	XOM	1st Boot	2nd Boot
0	0	0	UFS	USB
0	1	X	USB	----
1	0	0	SD	USB

AP JTAG

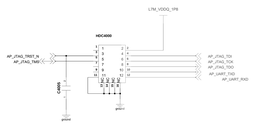

I2C PU RESISTOR

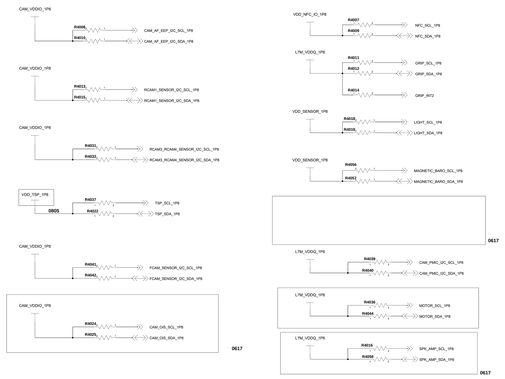

PCB JTAG

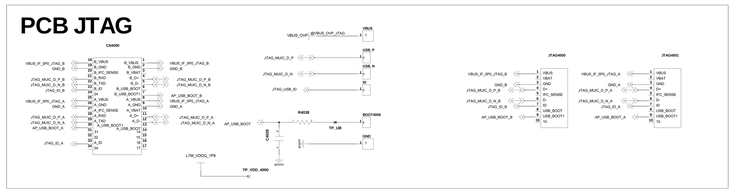

SOC THERMISTOR

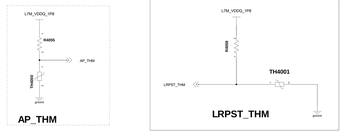

AP_THM

LRPST_THM

SYSTEM CLOCK

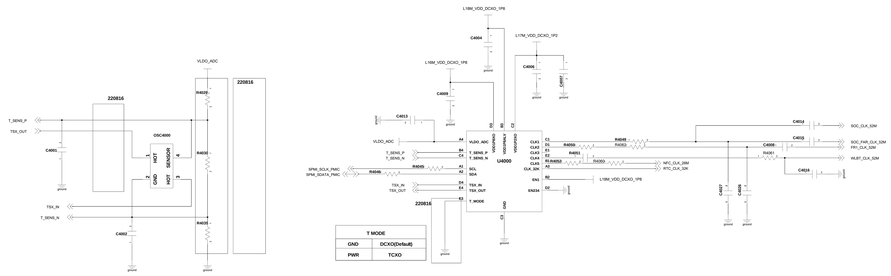

SAMSUNG CONFIDENTIAL
THIS DOCUMENT CONTAINS CONFIDENTIAL
PROPRIETARY INFORMATION THAT IS
SAMSUNG ELECTRONICS CO'S PROPERTY.
DO NOT DISCLOSE TO OR DUPLICATE FOR OTHERS
EXCEPT AS AUTHORIZED BY SAMSUNG.

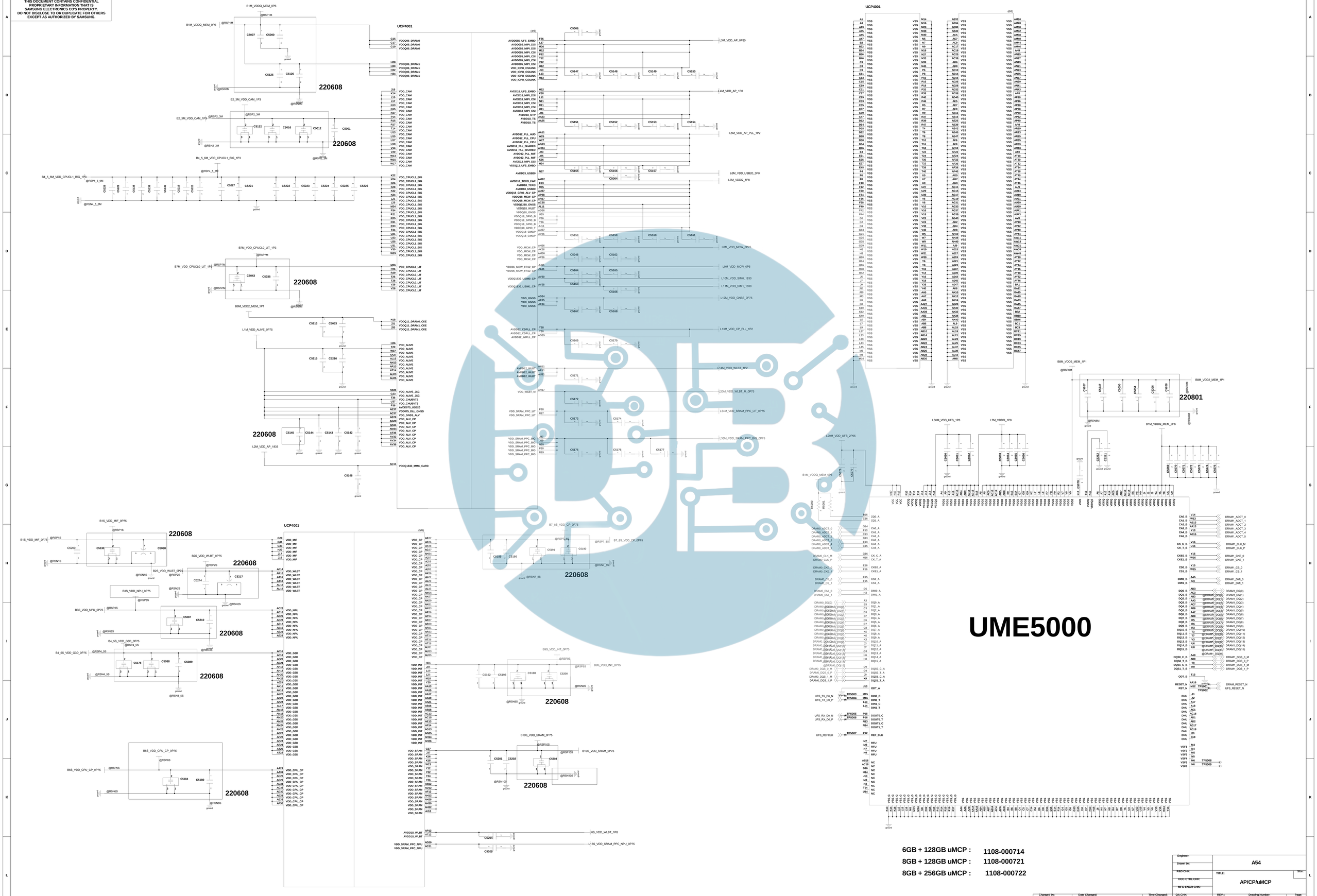

SAMSUNG CONFIDENTIAL
THIS DOCUMENT CONTAINS CONFIDENTIAL
AND PROPRIETARY INFORMATION OF THE
SAMSUNG ELECTRONICS COMPANY.
DO NOT DISCLOSE TO OR DUPLICATE FOR OTHERS
EXCEPT AS AUTHORIZED BY SAMSUNG.

MAIN PMIC

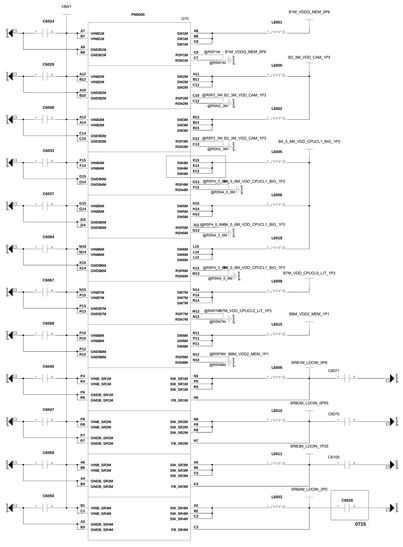

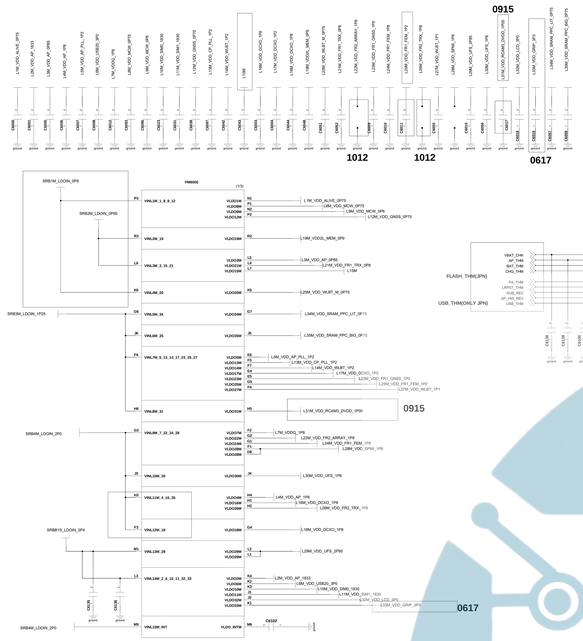

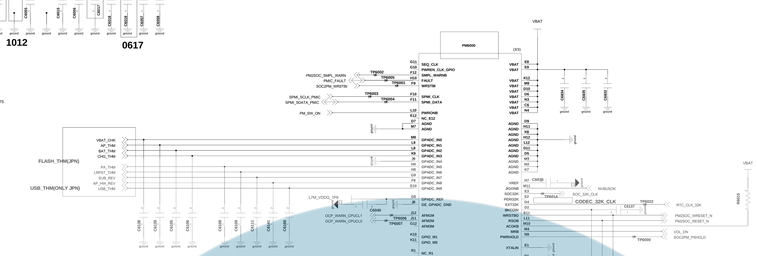

IF PMIC(SM5714)

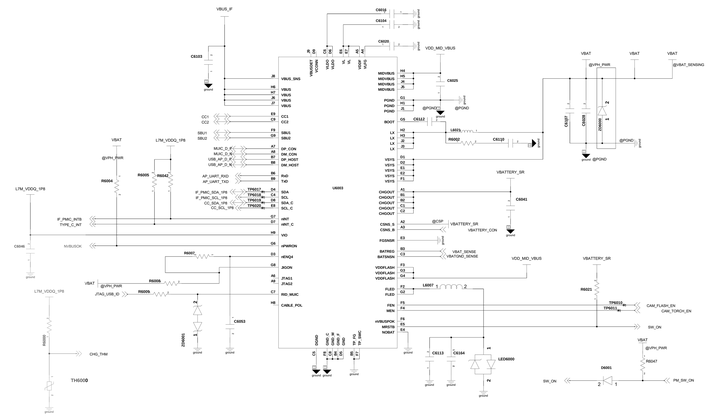

DIRECT CHARGER (SM5451)

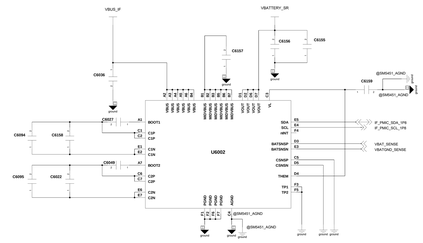

OVP

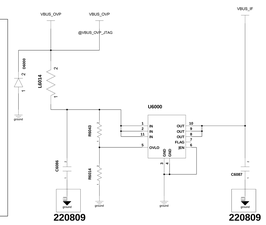

NA ONLY

220809

220809

REV	R1[Kohm]	R2[Kohm]	AP	
0	NC	0	R00	Bringup00
1	430	30	R01	Bringup01
2	390	62	R02	Real REV00
3	360	91	R03	Real REV01
4	330	120	R04	Real REV02
5	300	150	R05	Real REV03
6	270	180	R06	Real REV04
7	270	240	R07	Real REV04B
8	240	270	R08	Real REV04C
9	180	270		
10	150	300		

AP HW REV

R08

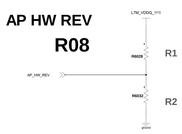

220620

MOT DRV

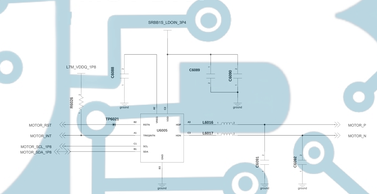

SUB PMIC

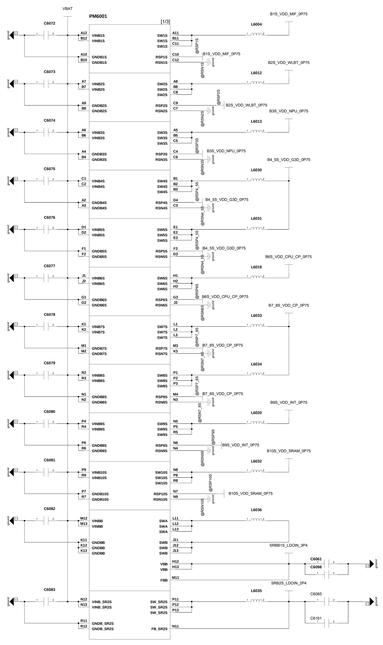

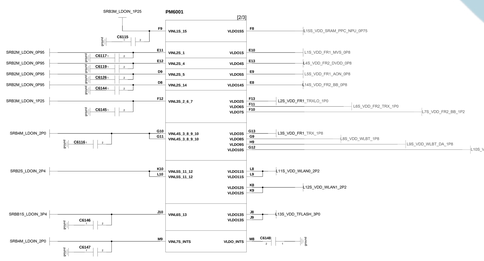

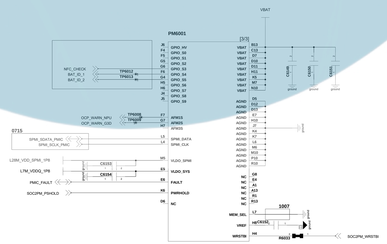

Cell leakage Sensing 1006

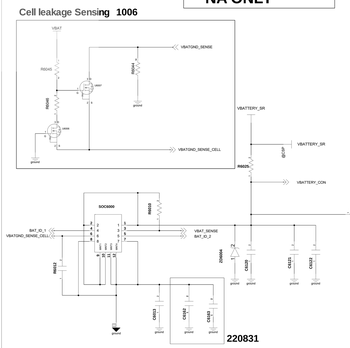

220831

BATTERY CON

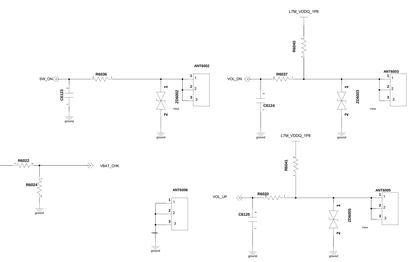

POWER & VOL KEY

Engineer:	A54
Drawn by:	
R&D CHK:	TITLE: POWER/MOT/KEY
DOC CTRL CHK:	Size:
MFG ENGR CHK:	
QA CHK:	REV: Drawing Number:

Changed by: | Date Changed: | Time Changed:

SAMSUNG CONFIDENTIAL
THIS DOCUMENT CONTAINS CONFIDENTIAL PROPRIETARY INFORMATION THAT IS SAMSUNG ELECTRONICS CO'S PROPERTY. DO NOT DISCLOSE TO OR DUPLICATE FOR OTHERS EXCEPT AS AUTHORIZED BY SAMSUNG.

AUDIO & SENSOR PART

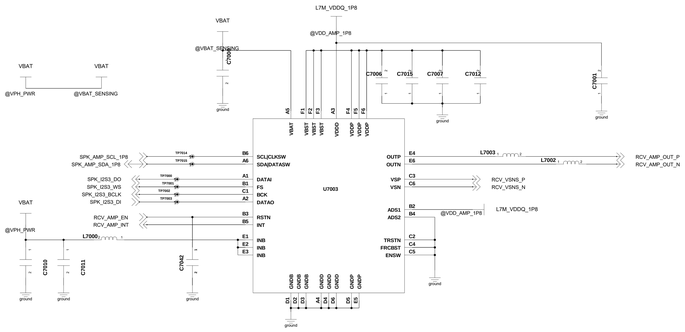

RCV AMP

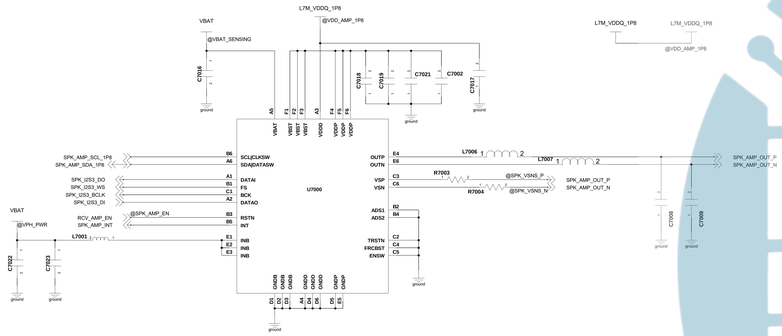

SPK AMP

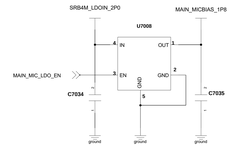

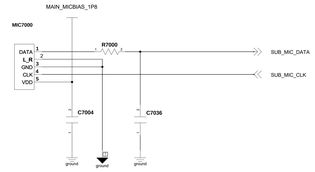

2nd MIC

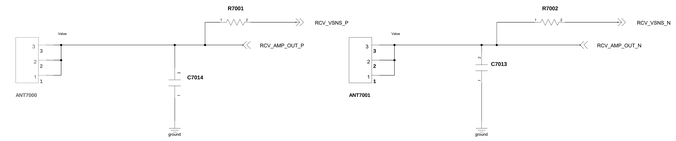

RCV CONTACT

SENSOR

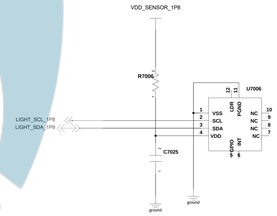

AMBIENT SENSOR

HALL IC

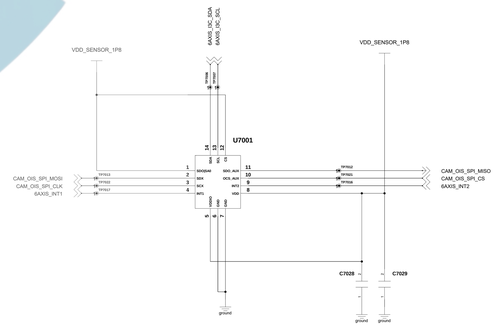

ACC&GYRO SENSOR

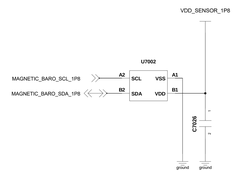

MAGNETIC SENSOR

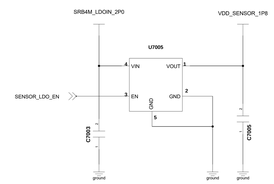

NA ONLY

DUAL SIM / T-FLASH (3in2)

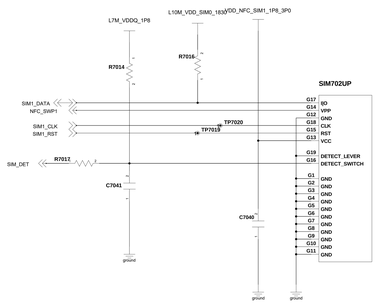

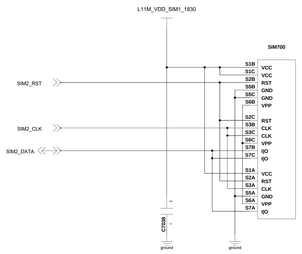

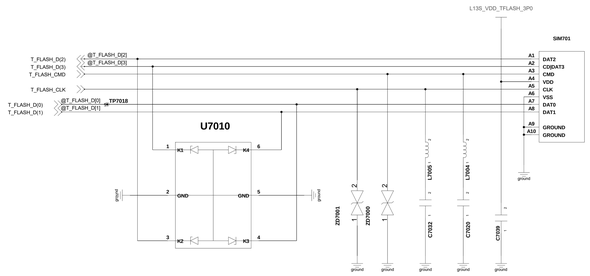

Stacked Dual SIM SOCKET (Reverse)

Changed by:	Date Changed:	Time Changed:	QA CHK:	REV:	Drawing Number:	Page:	Engineer:		A54								
							Drawn by:										
							R&D CHK:	TITLE:		Size:							
							DOC CTRL CHK:										
							MFG ENGR CHK:										

SAMSUNG CONFIDENTIAL
THIS DOCUMENT CONTAINS CONFIDENTIAL PROPRIETARY INFORMATION THAT IS SAMSUNG ELECTRONICS CO'S PROPERTY. DO NOT DISCLOSE TO OR DUPLICATE FOR OTHERS EXCEPT AS AUTHORIZED BY SAMSUNG.

CAMERA

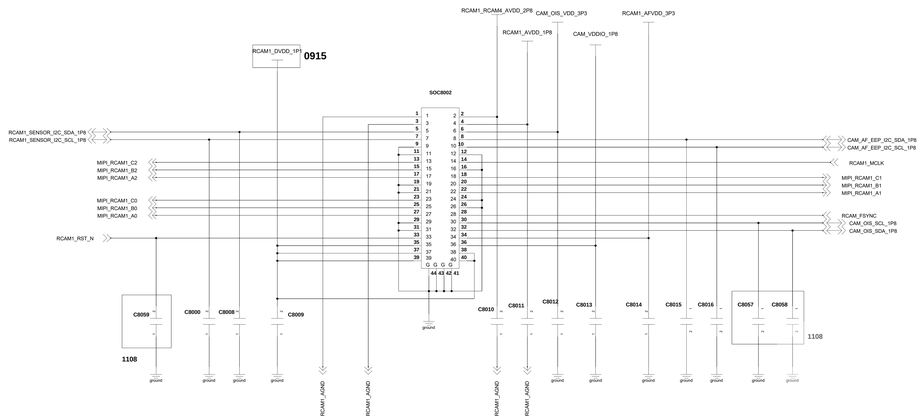

RCAM1_50M OIS(40PIN)

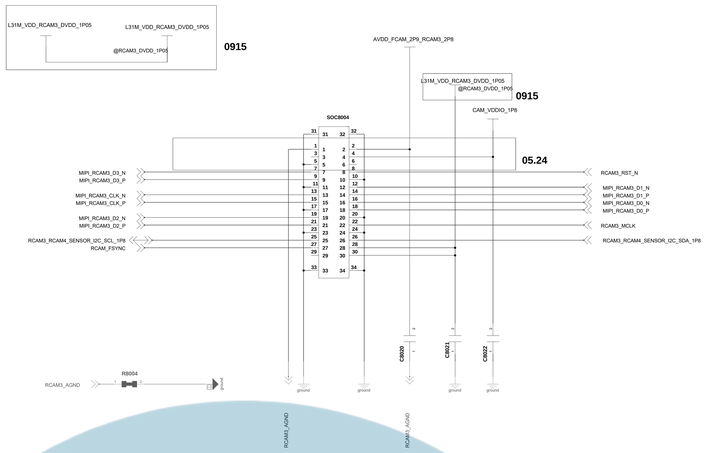

RCAM3_SUPER WIDE_12M CAMERA(30pin)

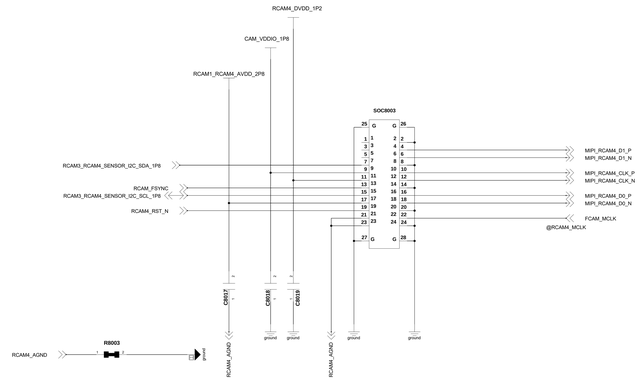

RCAM4_5M_MACRO_CAMERA(24PIN)

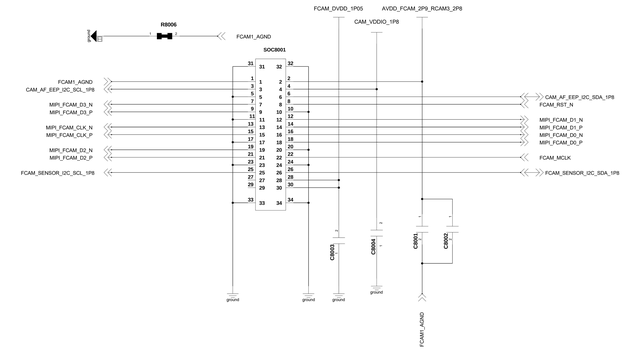

FRONT_32M CAMERA (30PIN)

CAM PMIC

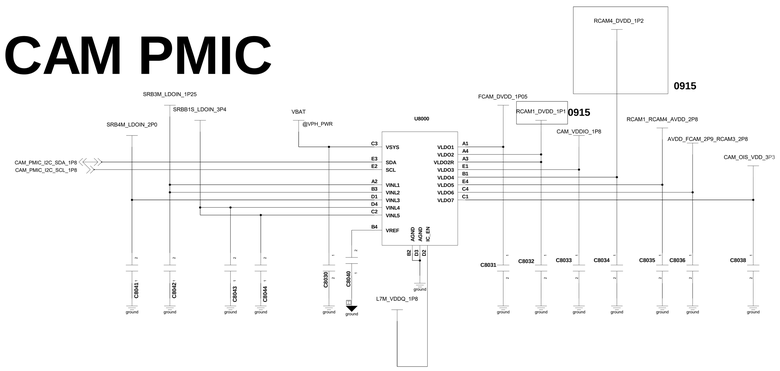

DECO CONTACT

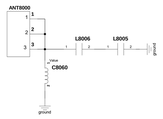

220915

RCAM4_AVDD

RCAM3_AVDD

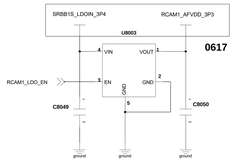

RCAM1_AF

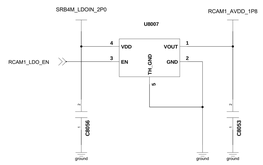

RCAM1_AVDD

CAM MCU_DVDD

0617

CAM MCU

RCAM4_DVDD

220915

Engineer:	A54
Drawn by:	
R&D CHK:	TITLE: CAMERA
DOC CTRL CHK:	
MFG ENGR CHK:	

Changed by: | Date Changed: | Time Changed: | QA CHK: | REV: | Drawing Number: | Size: | Page:

SAMSUNG CONFIDENTIAL
THIS DOCUMENT CONTAINS CONFIDENTIAL
PROPRIETARY INFORMATION THAT IS
SAMSUNG ELECTRONICS CO'S PROPERTY.
DO NOT DISCLOSE TO OR DUPLICATE FOR OTHERS
EXCEPT AS AUTHORIZED BY SAMSUNG.

C2C (Conn to Conn FPCB)

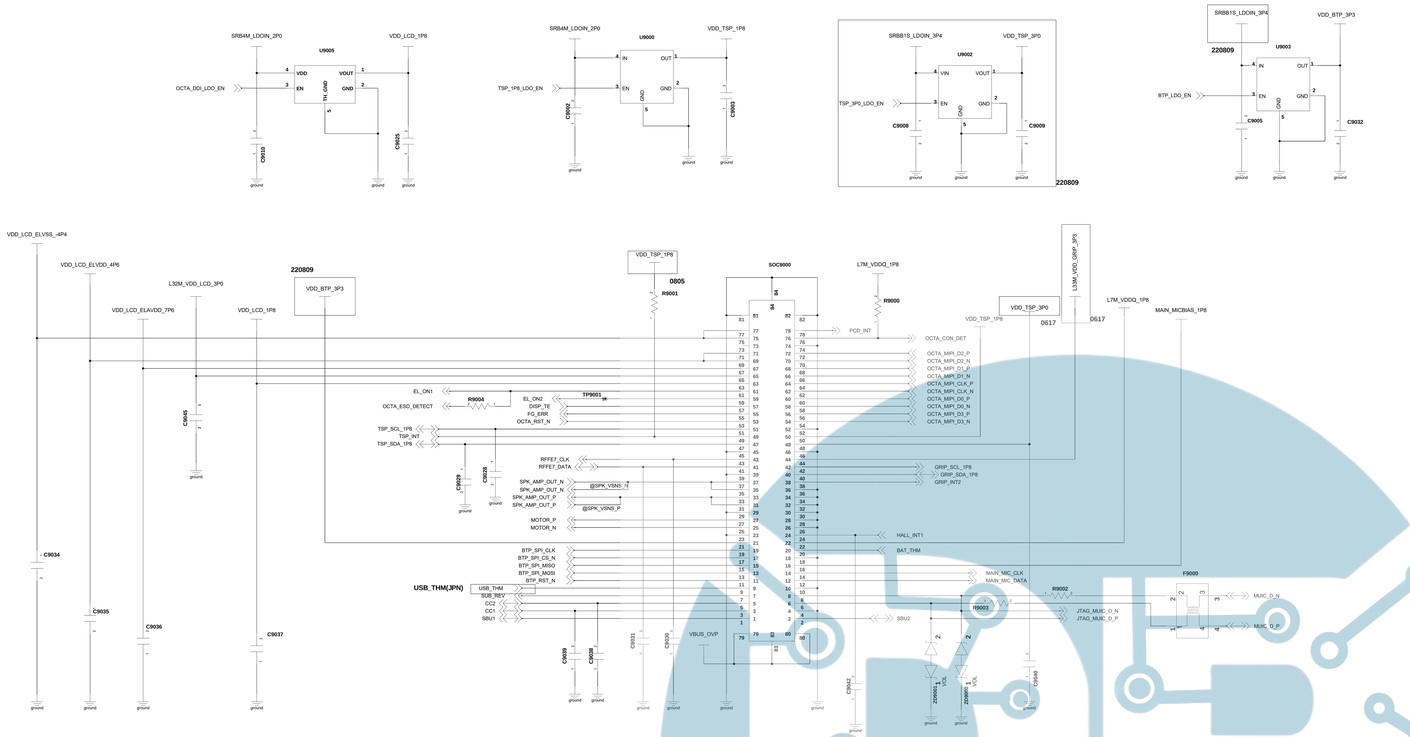

DISPLAY

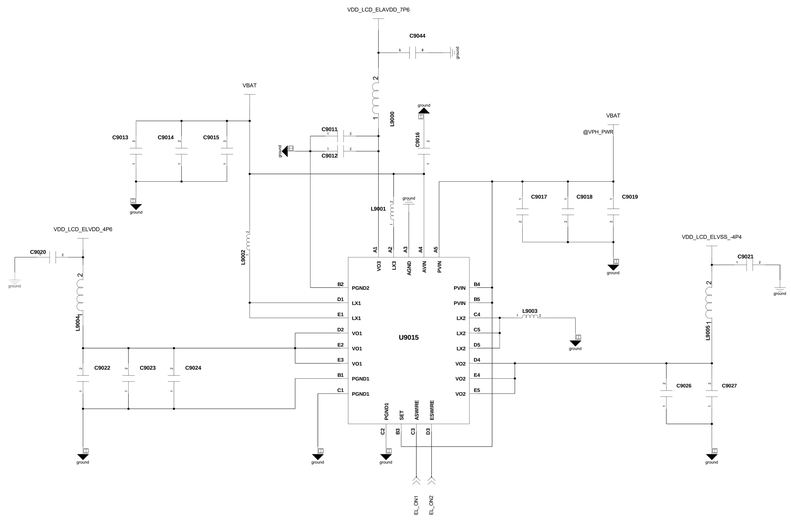

DISPLAY PMIC

2D Barcode

SHIELD CAN

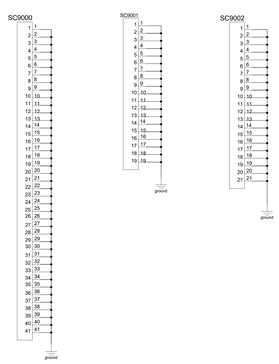

REGION		MEMORY		
R9013	B : EUR	R9019	6/128	
R9014	0 : HK CHN	R9015	8/128	
R9018	S : KOR SKT	R9017	8/256	
R9021	E : SEA, MEA, SWA E : AFR, LA, CIS			

mmW_ANT_CONN (Right)

NA ONLY

ESD 0 : OPEN
ESD 1 : 2 pin

5G IFIC

NA ONLY

Engineer:		A54	
Drawn by:			
R&D CHK:		TITLE:	Size:
DOC CTRL CHK:			
MFG ENGR CHK:			
Changed By:	Date Changed:	Time Changed:	QA CHK:
REV:	Drawing Number:	Page:	