Internal Use Only

MOBILE PHONE

SERVICE MANUAL

CAUTION
BEFORE SERVICING THE UNIT, READ THE “SAFETY PRECAUTIONS” IN THIS M
ANUAL

DIGITAL BOARD
ESQUEMAS DIGITALIZADOS

MODEL : LG-X230DS

TROBLESHOOTING

Date: Feb 2017 / Issue 1.1

3.1 Checking XO Block

The out put frequency(26.0MHz) of XO(X1302) is used as the reference one of MT6169 internal VCO

Checking Flow

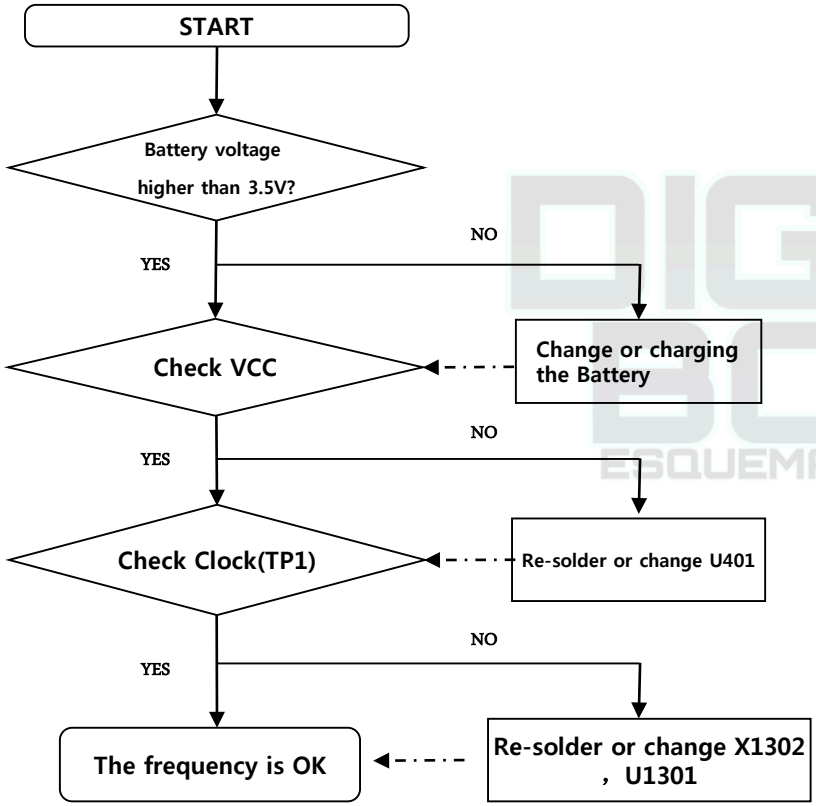

Image

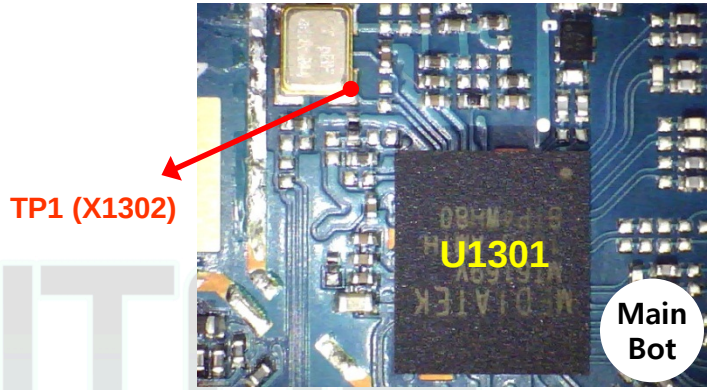

Circuit Diagram

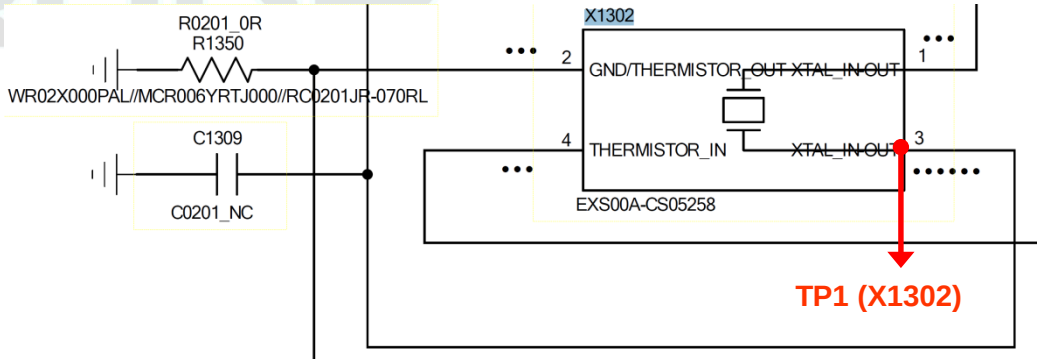

Copyright © 2017 LG Electronics. Inc. All right reserved. Only training and service purposes

3.2 Checking Transceiver DC Power Supply Circuit Block

The MT6169 operating voltages used three voltage sources 1.8V and 1.8V and 2.8V

Checking Flow

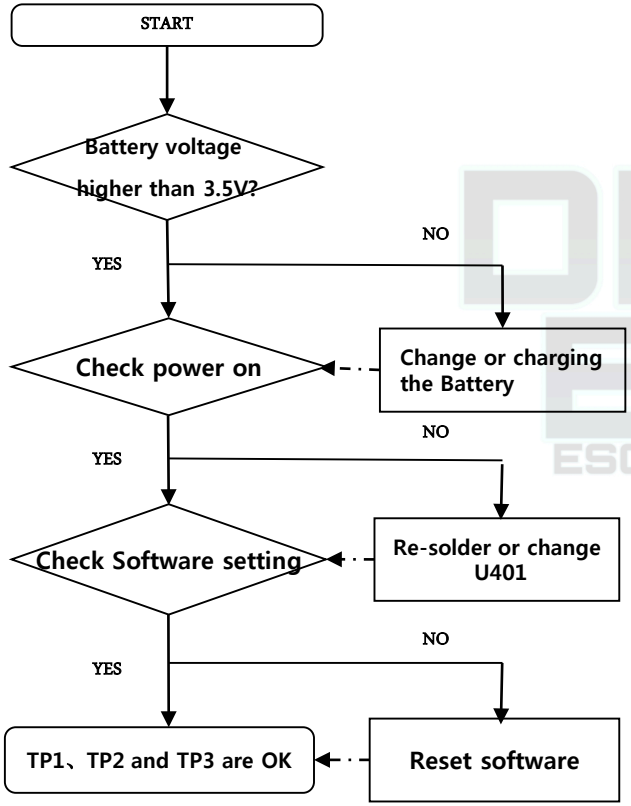

Image

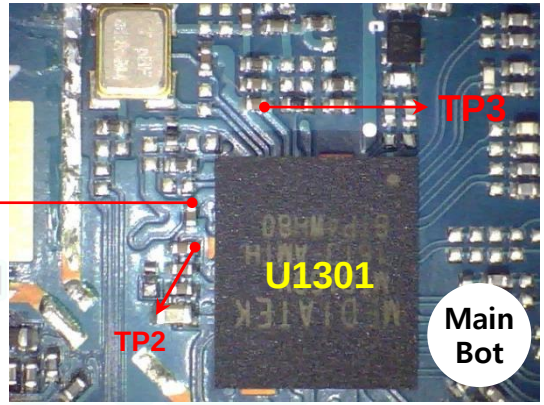

Circuit Diagram

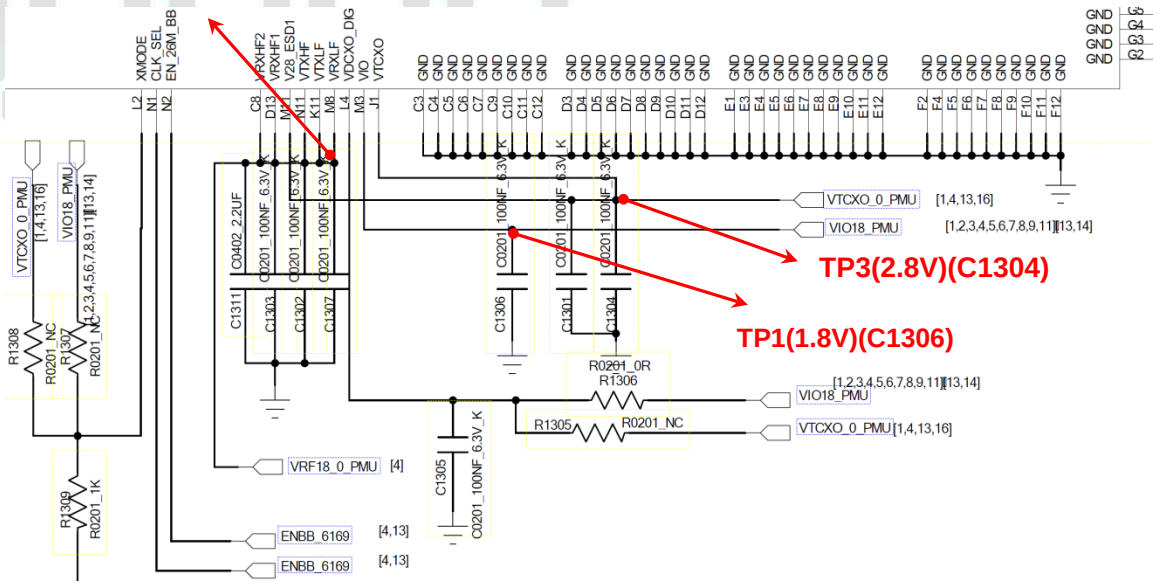

Copyright © 2017 LG Electronics. Inc. All right reserved. Only training and service purposes

3.3 FEM (Front-End Module) Block

3.3.2 . All Band FEM Block (GSM 850/900/1800/1900, WCDMA B1/5/8)

Checking Flow

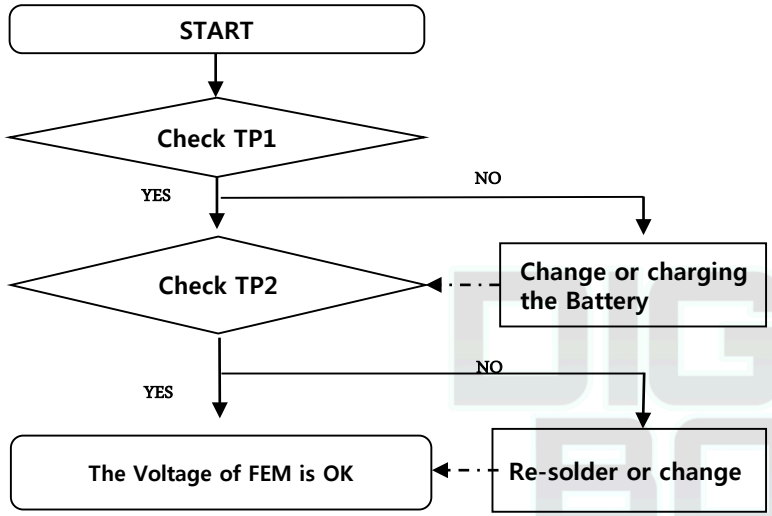

Image

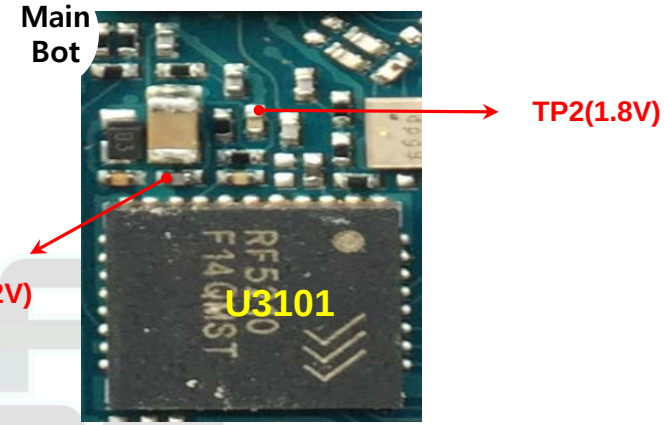

Circuit Diagram

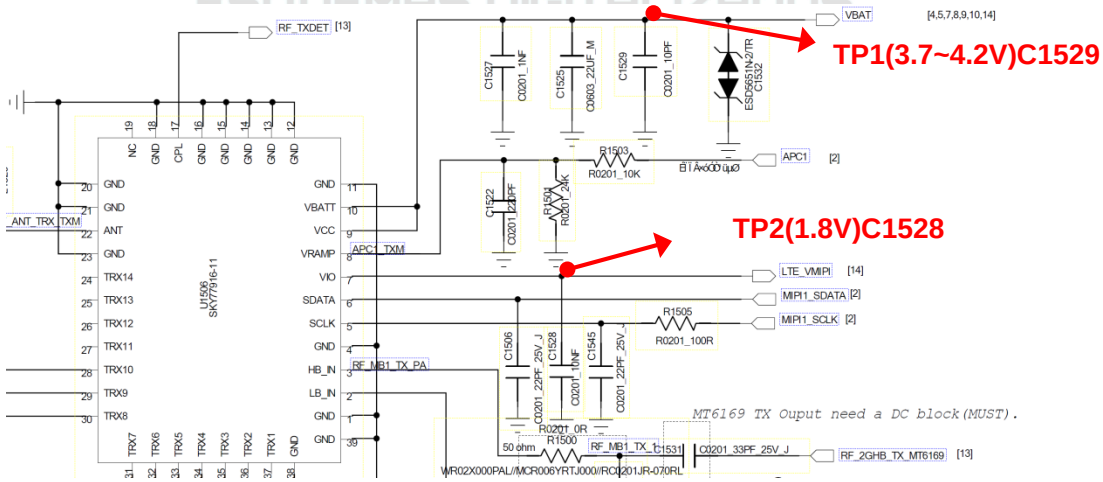

Copyright © 2017 LG Electronics. Inc. All right reserved. Only training and service purposes

3.4 GSM RF PART

GSM RF Part support GSM850/900/1800/1900 with ASM, PAM, Transceiver component

Checking Flow

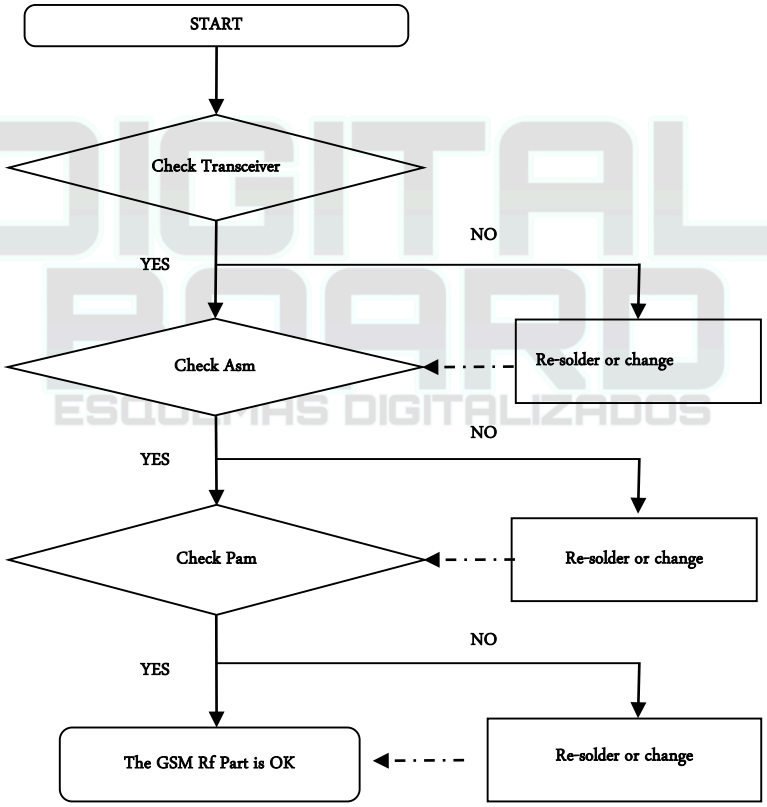

DIGITAL BOARD ESQUEMAS DIGITALIZADOS

Copyright © 2017 LG Electronics. Inc. All right reserved. Only training and service purposes

3.4 GSM RF PART

3.4.1 GSM850/900/1800/1900 Rx

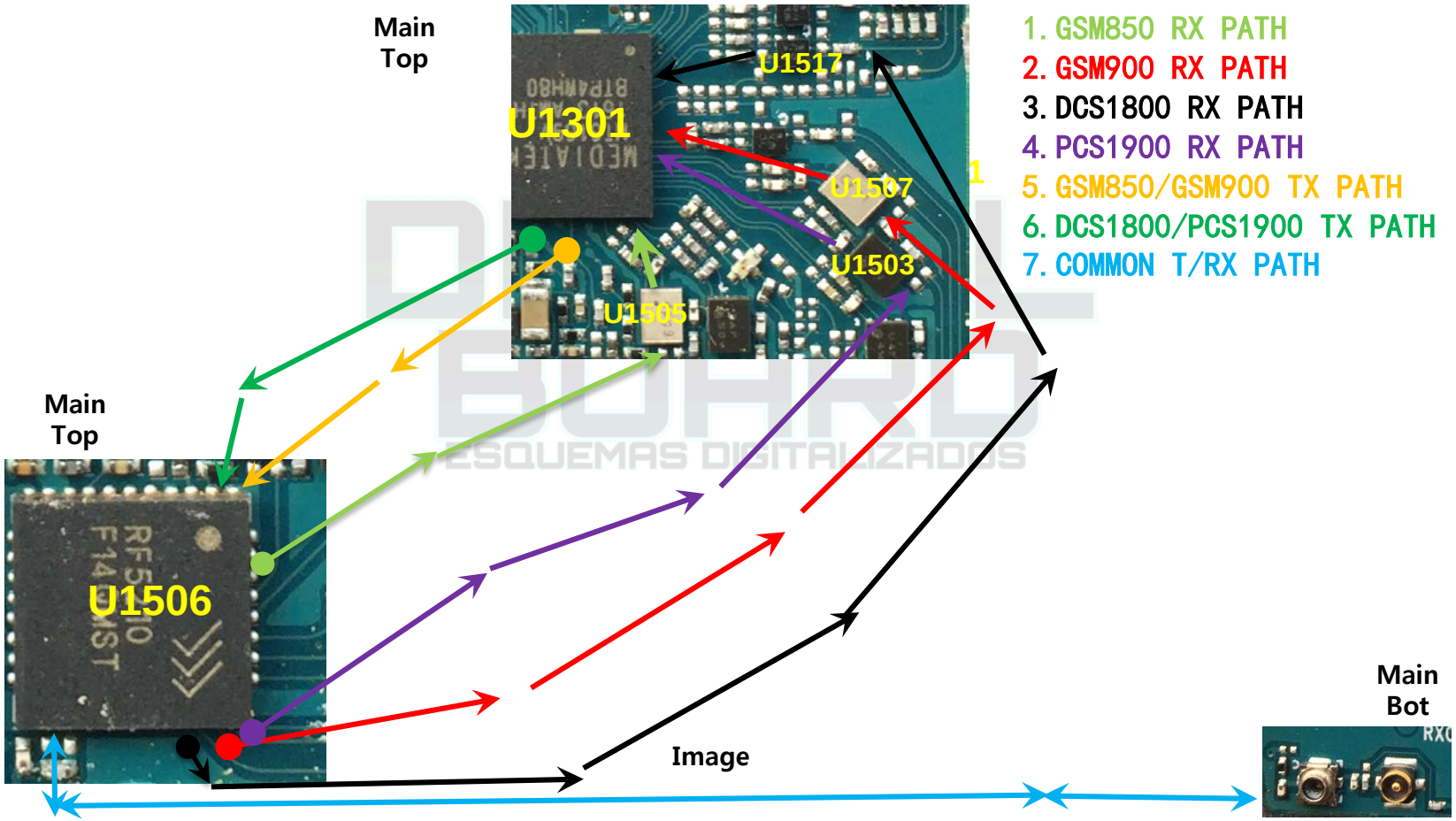

Copyright © 2017 LG Electronics. Inc. All right reserved. Only training and service purposes

3.4 GSM RF PART

3.4.1.1 Checking RF signal path (SW)

Checking Flow

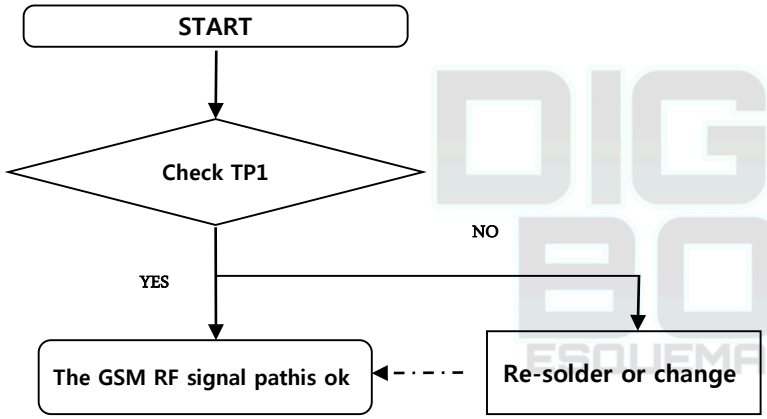

Image

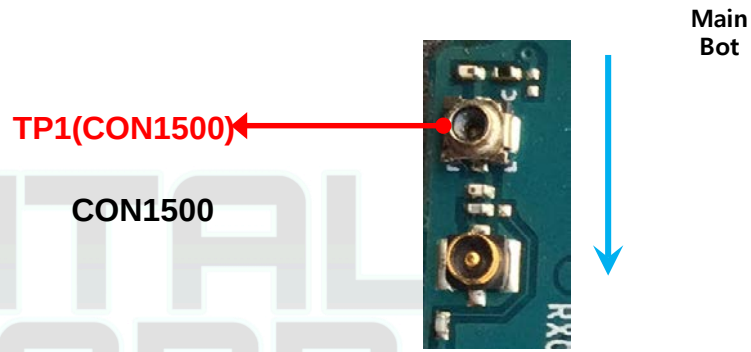

Circuit Diagram

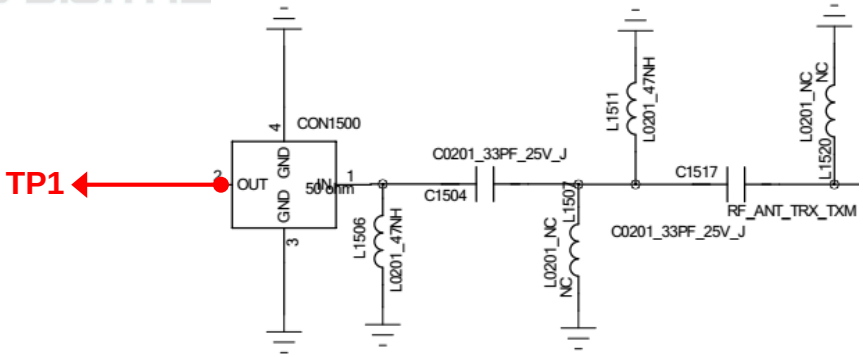

DIGITAL BOARD
ESQUEMAS DIGITALIZADOS

Copyright © 2017 LG Electronics. Inc. All right reserved. Only training and service purposes

3.4 GSM RF PART

3.4.1.2 Checking RF Signal RX path(GSM850/GSM900/DCS1800/PCS1900)

Checking Flow

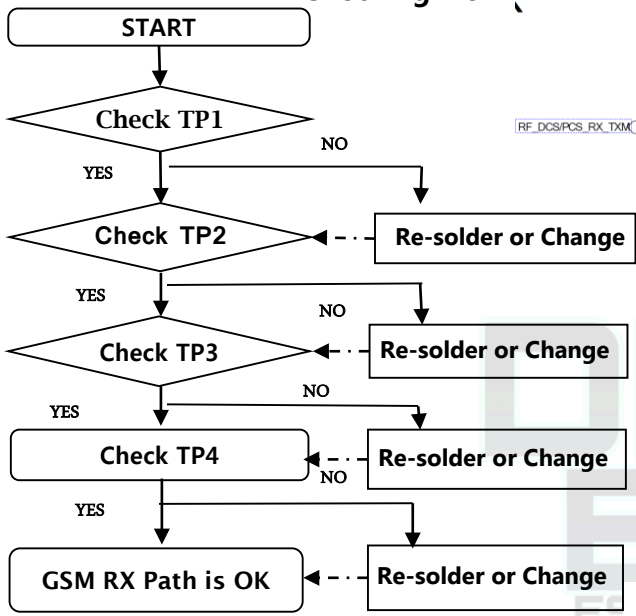

Image

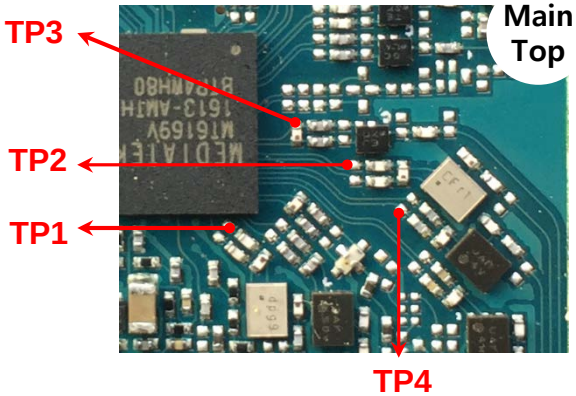

Circuit Diagram

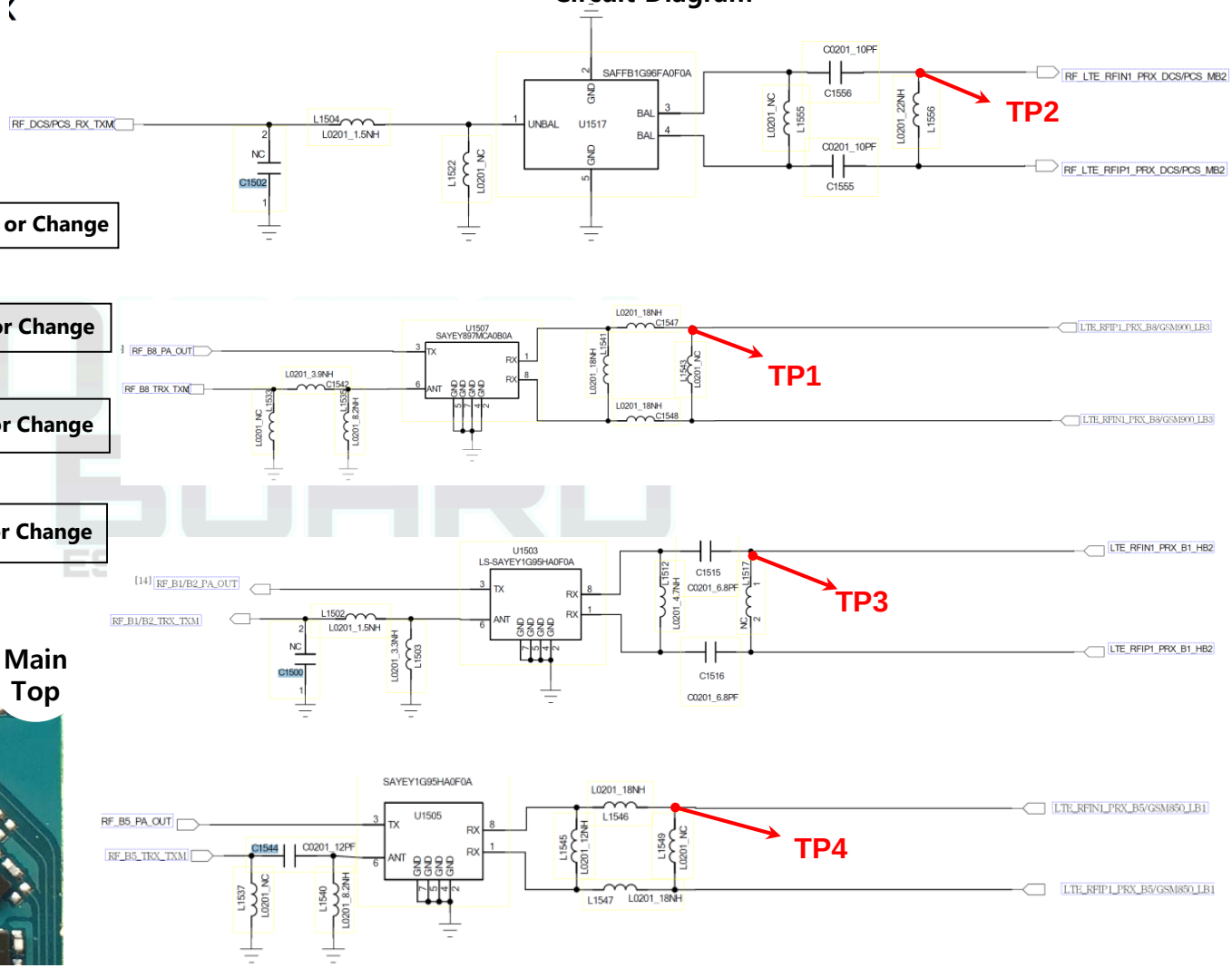

Copyright © 2017 LG Electronics. Inc. All right reserved. Only training and service purposes

3.4 GSM RF PART

3.4.2.1 GSM850/900/1800/1900 Tx

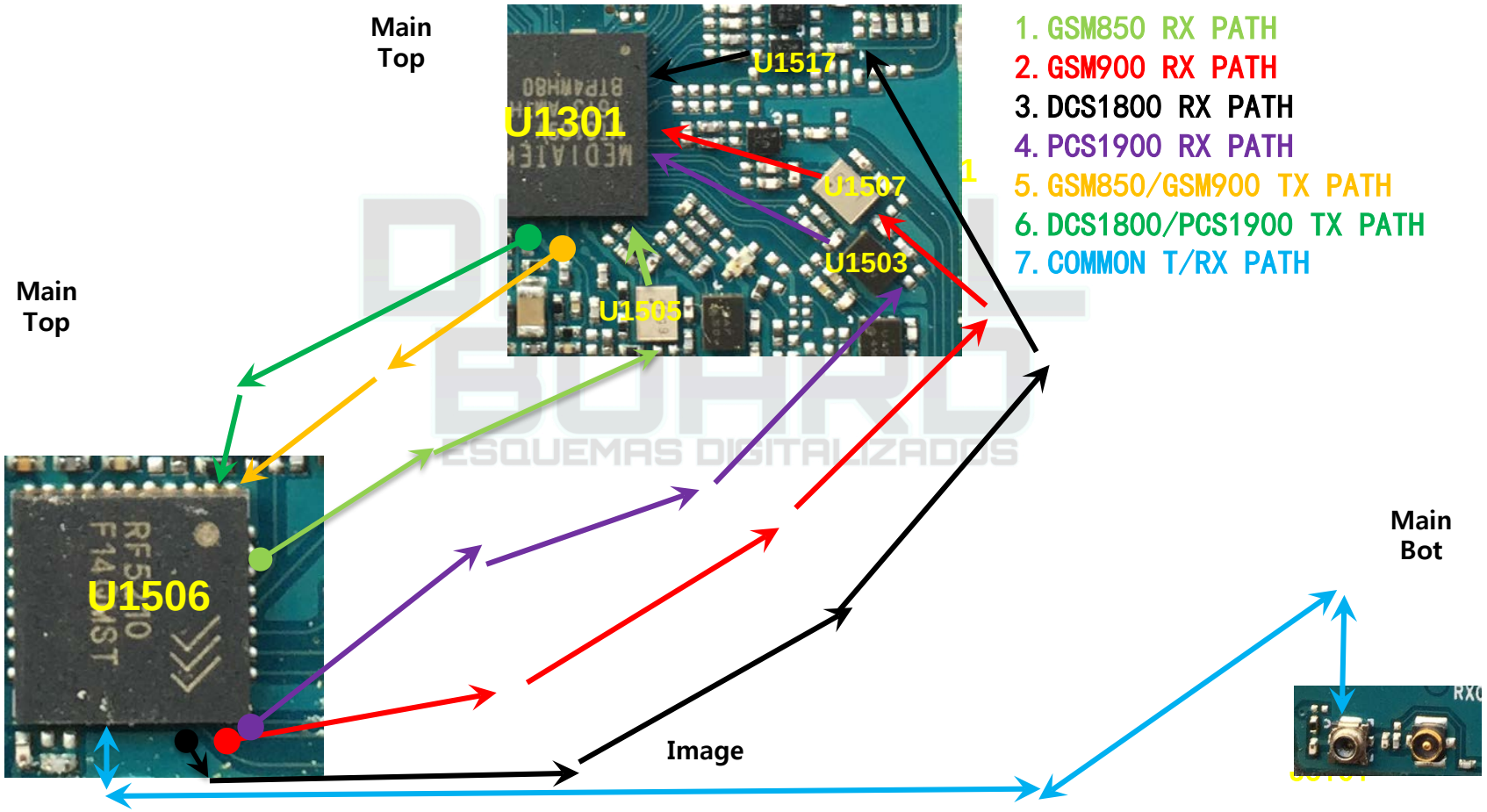

Copyright © 2017 LG Electronics. Inc. All right reserved. Only training and service purposes

3.4 GSM RF PART

3.4.2.2 Checking GSM PAM DC Power Circuit

Checking Flow

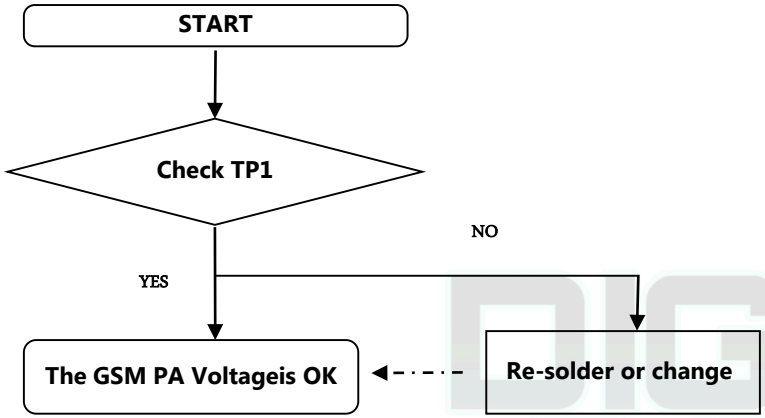

Image

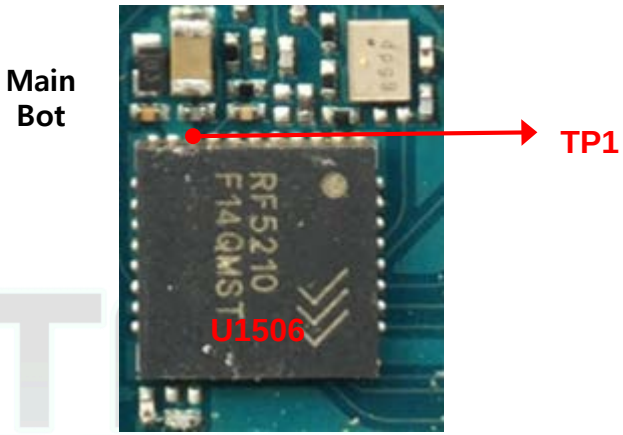

Circuit Diagram

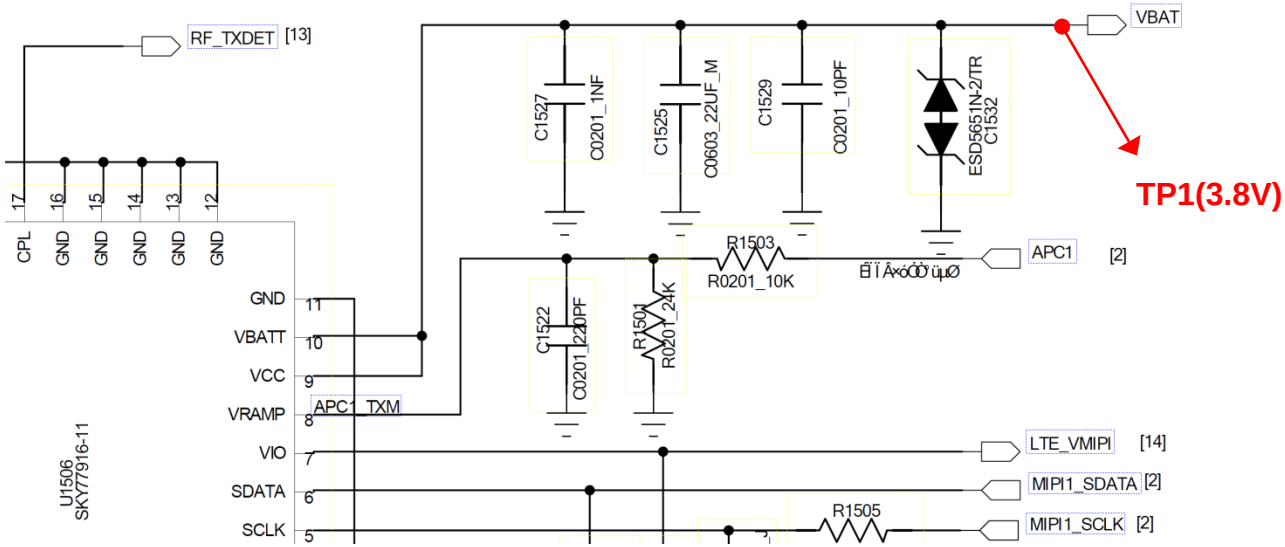

Copyright © 2017 LG Electronics. Inc. All right reserved. Only training and service purposes

3.4 GSM RF PART

3.4.2.3 Checking RF signal path(SW)

Checking Flow

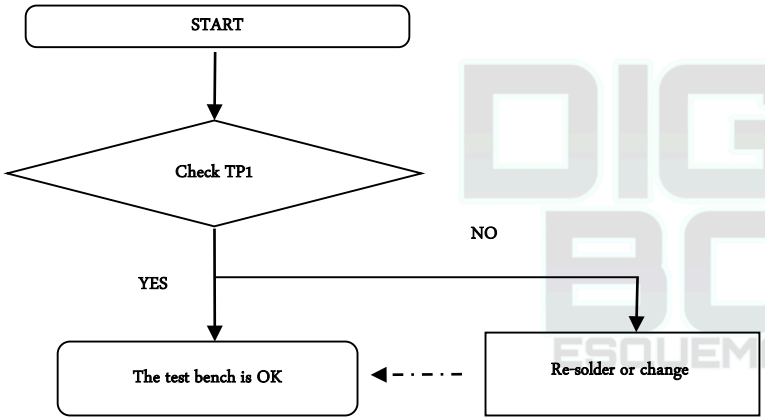

Image

Circuit Diagram

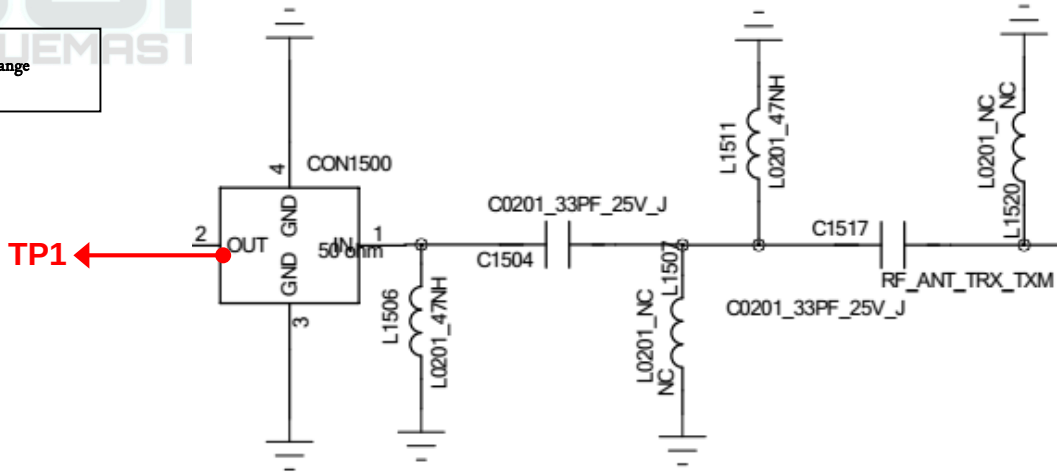

DIGITAL BOARD ESQUEMAS

Copyright © 2017 LG Electronics. Inc. All right reserved. Only training and service purposes

3.4 GSM RF PART

3.4.2.4 Checking RF signal path

Checking Flow

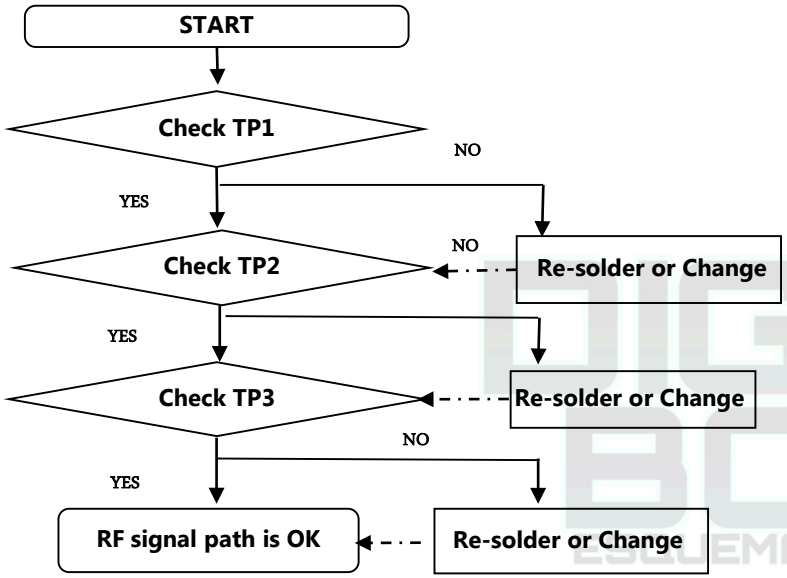

Image

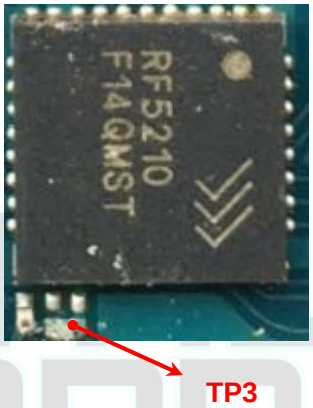

Main Bot

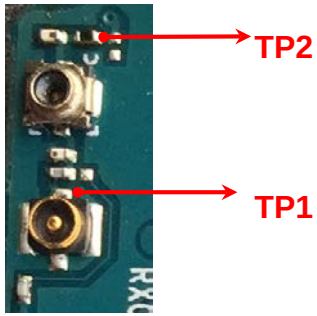

Circuit Diagram

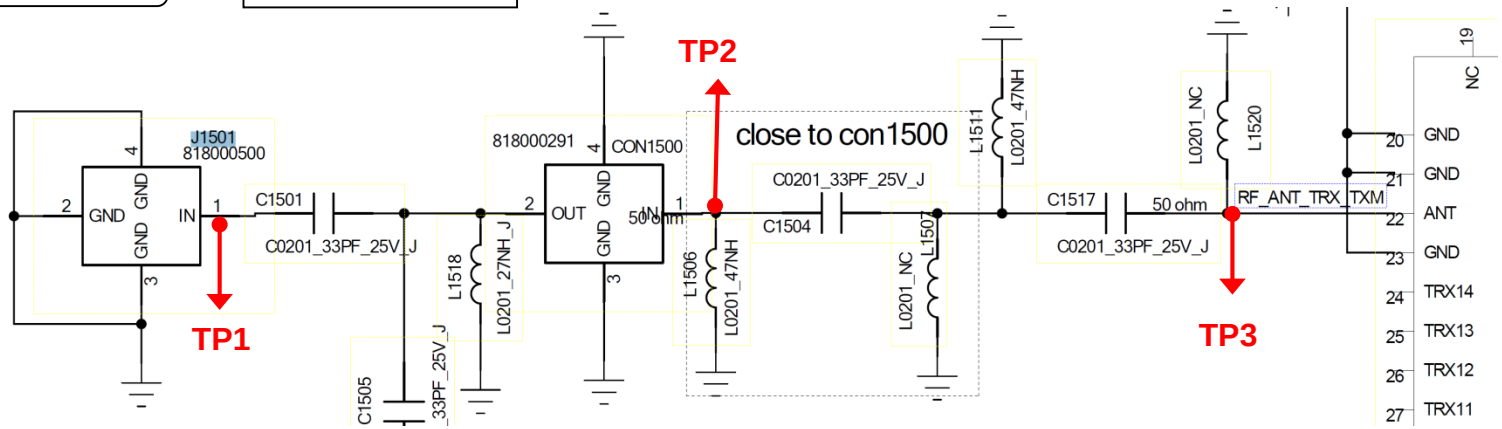

Copyright © 2017 LG Electronics. Inc. All right reserved. Only training and service purposes

3.5 WCDMA RF Part

WCDMA RF Part support WCDMA B1/5/8 with FEM, PAM, Transceiver component

Checking Flow

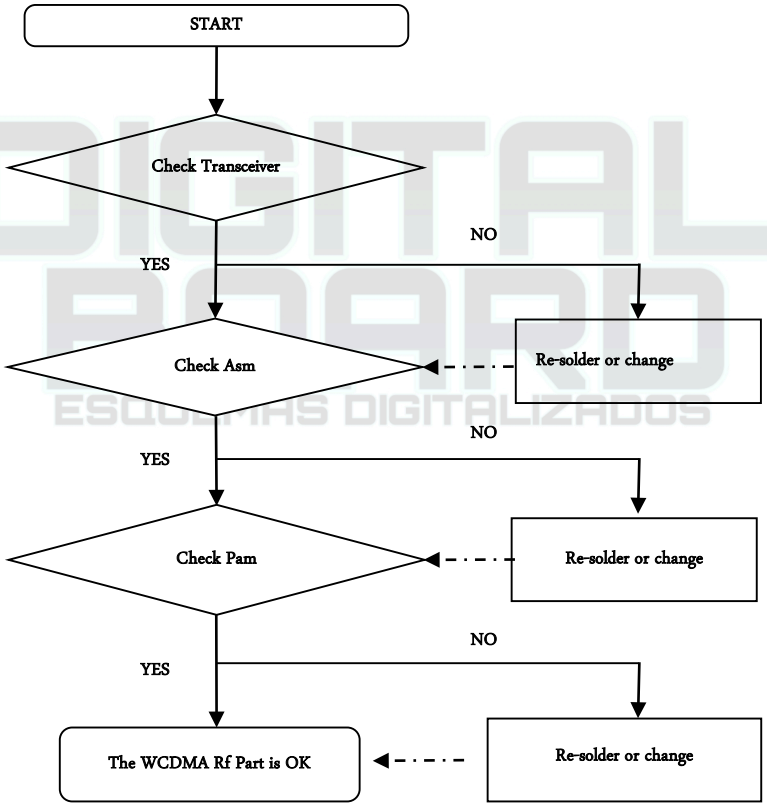

DIGITAL BOARD ESQUEMAS DIGITALIZADOS

Copyright © 2017 LG Electronics. Inc. All right reserved. Only training and service purposes

3.5 WCDMA RF PART

3.5.1 WCDMA RF Part RX PATH (B1/B5/B8)

1) WCDMA RX Path

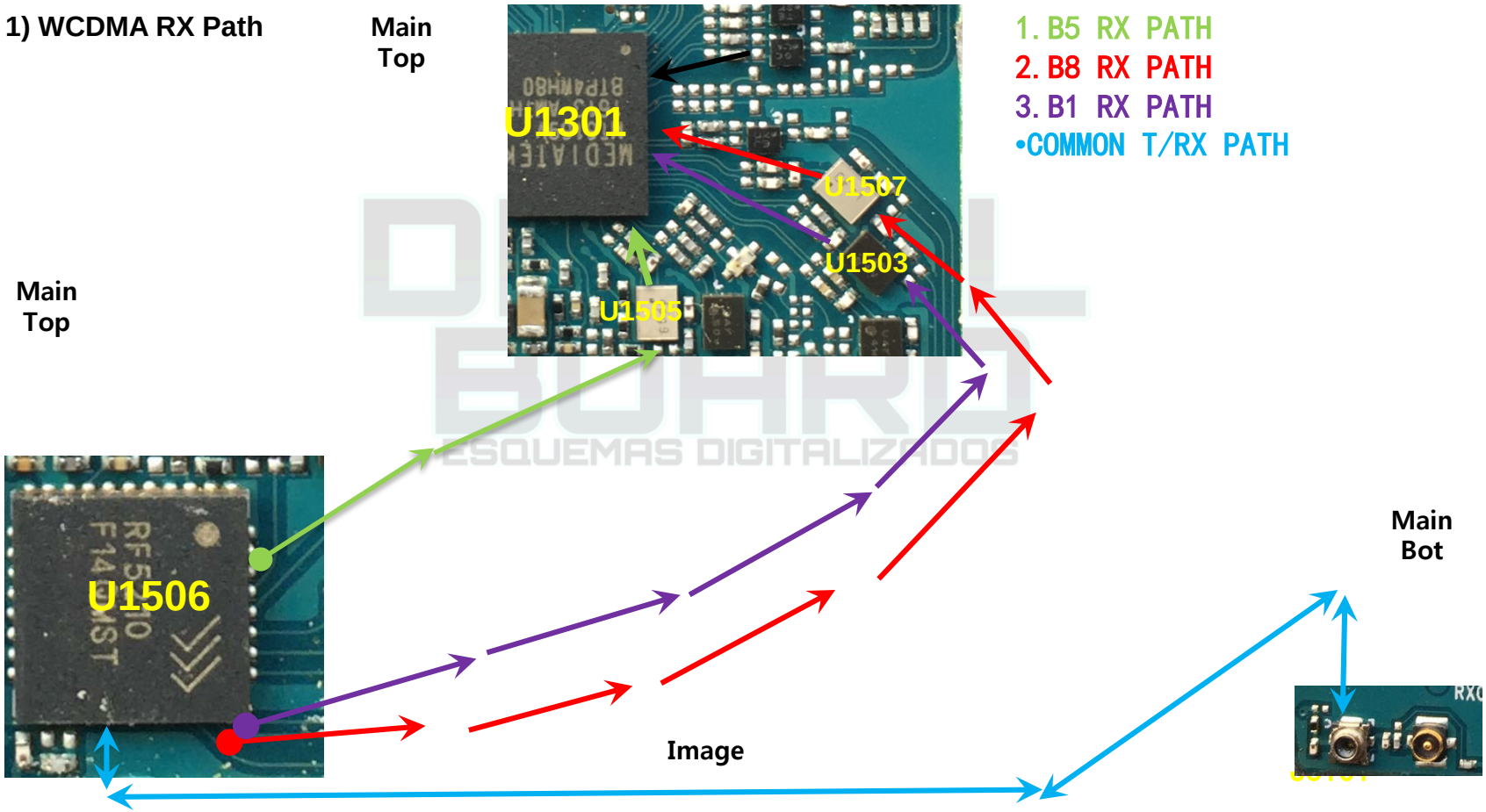

Copyright © 2017 LG Electronics. Inc. All right reserved. Only training and service purposes

3.5 WCDMA RF PART

3.5.1.1 Checking RF signal path(Band 1)

Checking Flow

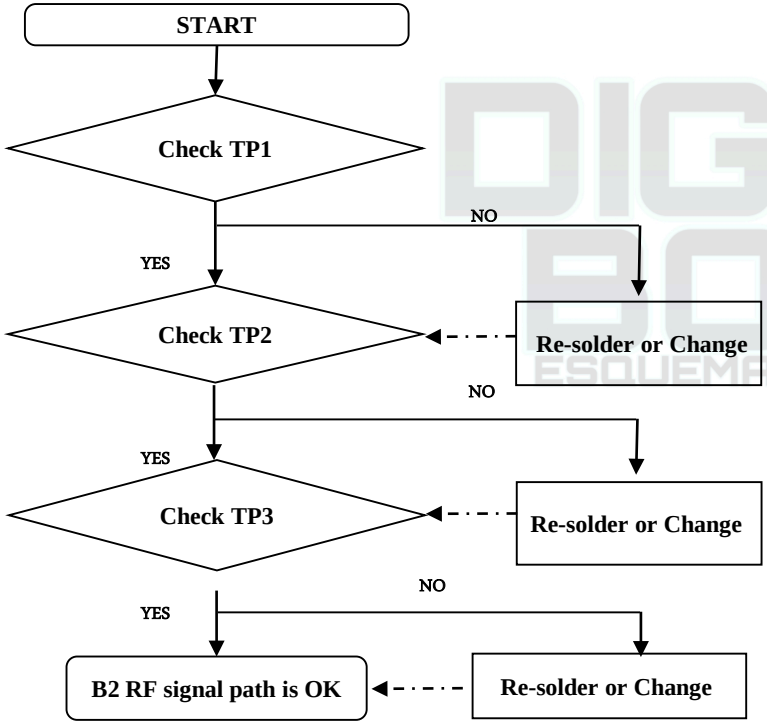

Image

Main
Top

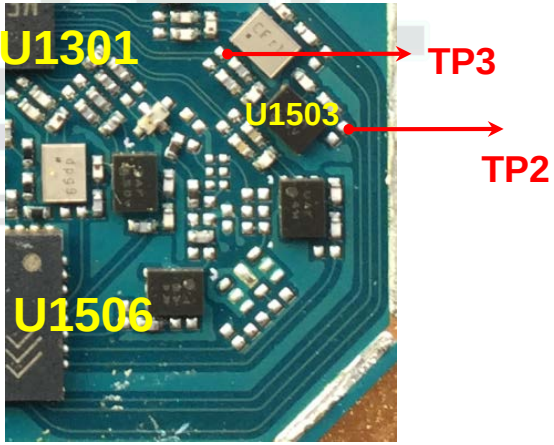

Main
Bot

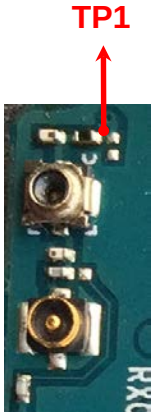

Copyright © 2017 LG Electronics. Inc. All right reserved. Only training and service purposes

3.5 WCDMA RF PART

3.5.1.1 Checking RF signal path(Band 1)

Circuit Diagram

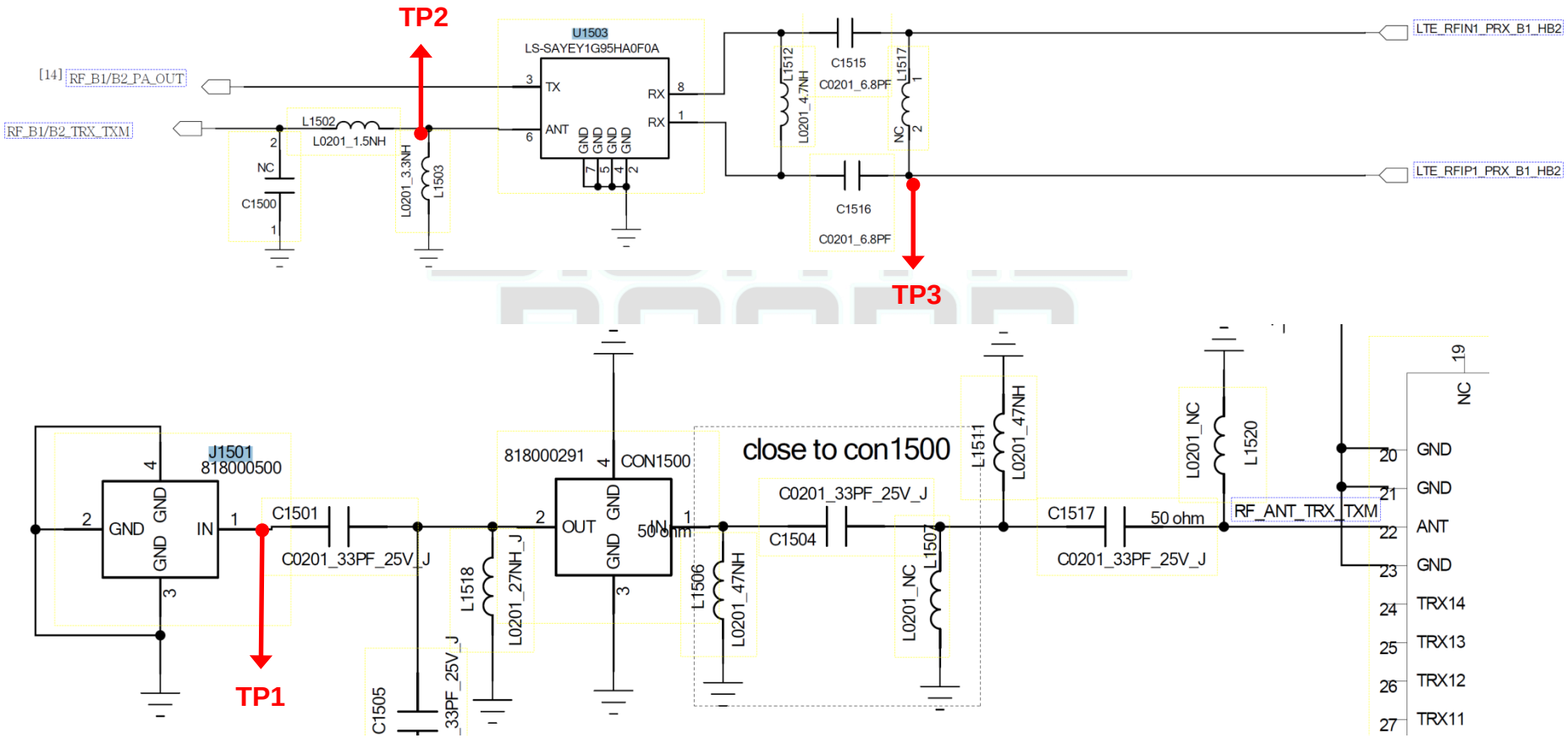

Copyright © 2017 LG Electronics. Inc. All right reserved. Only training and service purposes

3.5 WCDMA RF PART

3.5.1.2 Checking RF signal path(Band 5)

Checking Flow

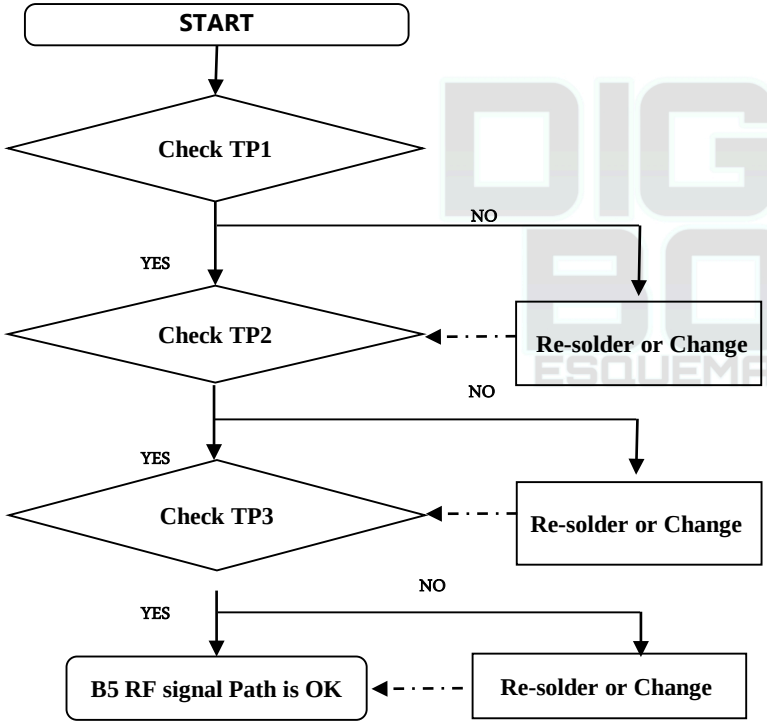

Image

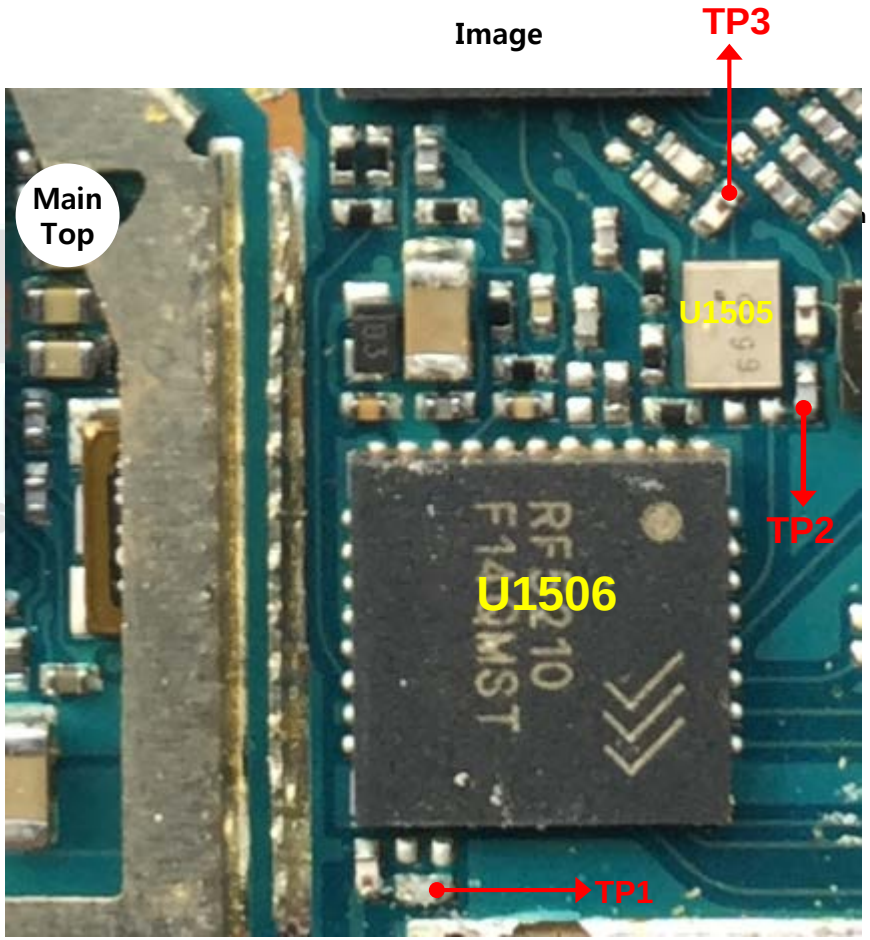

Copyright © 2017 LG Electronics. Inc. All right reserved. Only training and service purposes

3.5 WCDMA RF PART

3.5.1.2 Checking RF signal path(Band 5)

Circuit Diagram

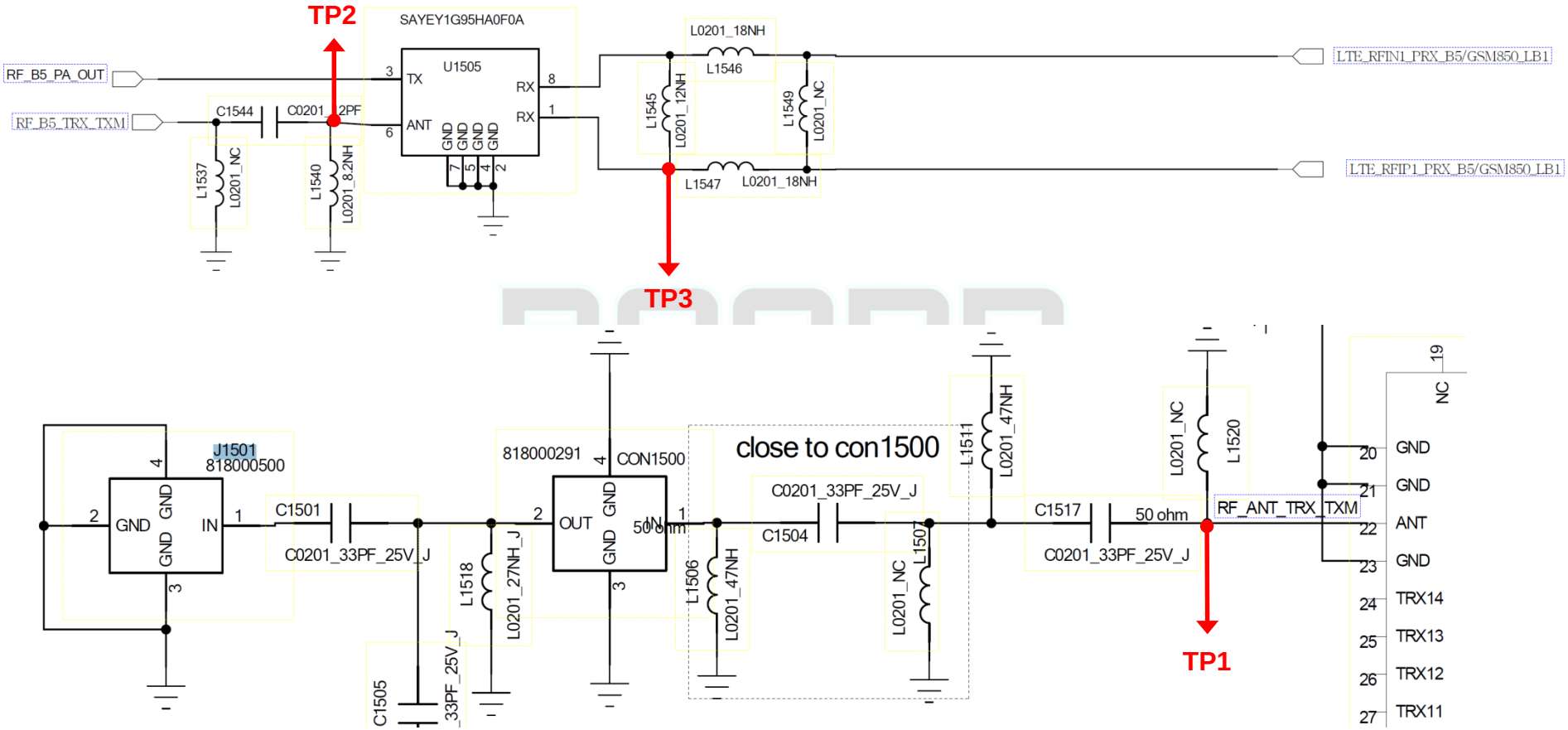

Copyright © 2017 LG Electronics. Inc. All right reserved. Only training and service purposes

3.5 WCDMA RF PART

3.5.1.3 Checking RF signal path(Band 8)

Checking Flow

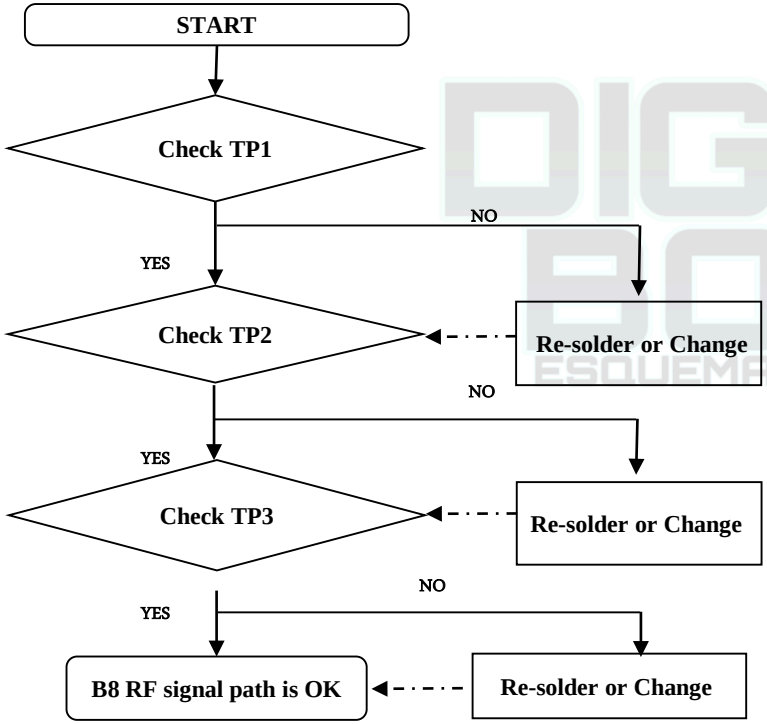

Image

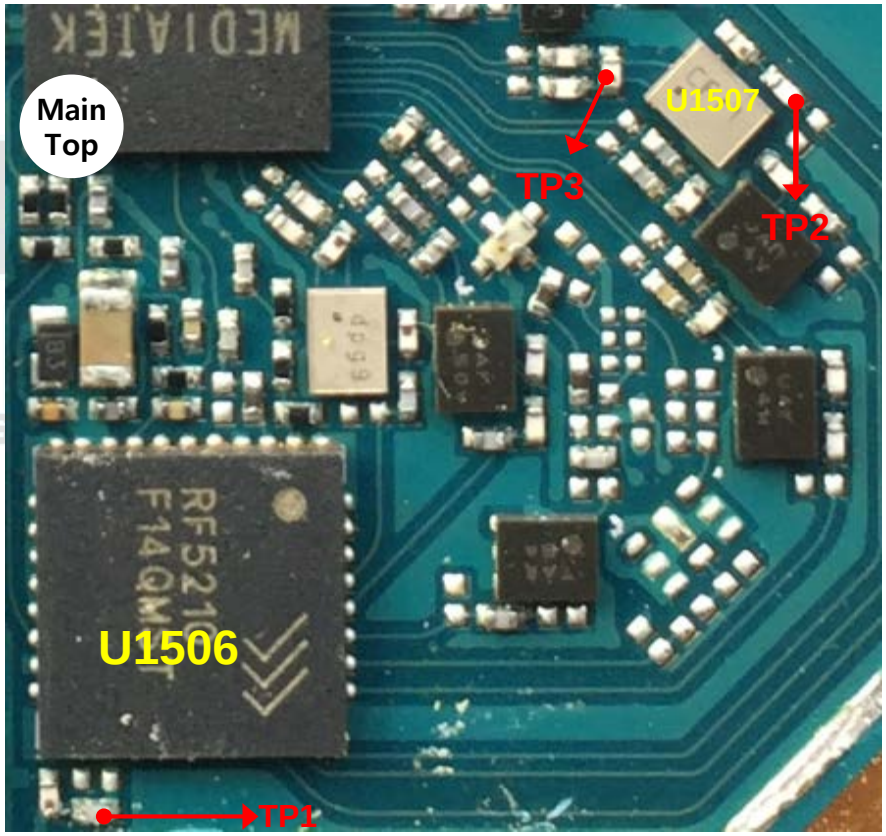

Copyright © 2017 LG Electronics. Inc. All right reserved. Only training and service purposes

3.5 WCDMA RF PART

3.5.1.3 Checking RF signal path(Band 8)

Circuit Diagram

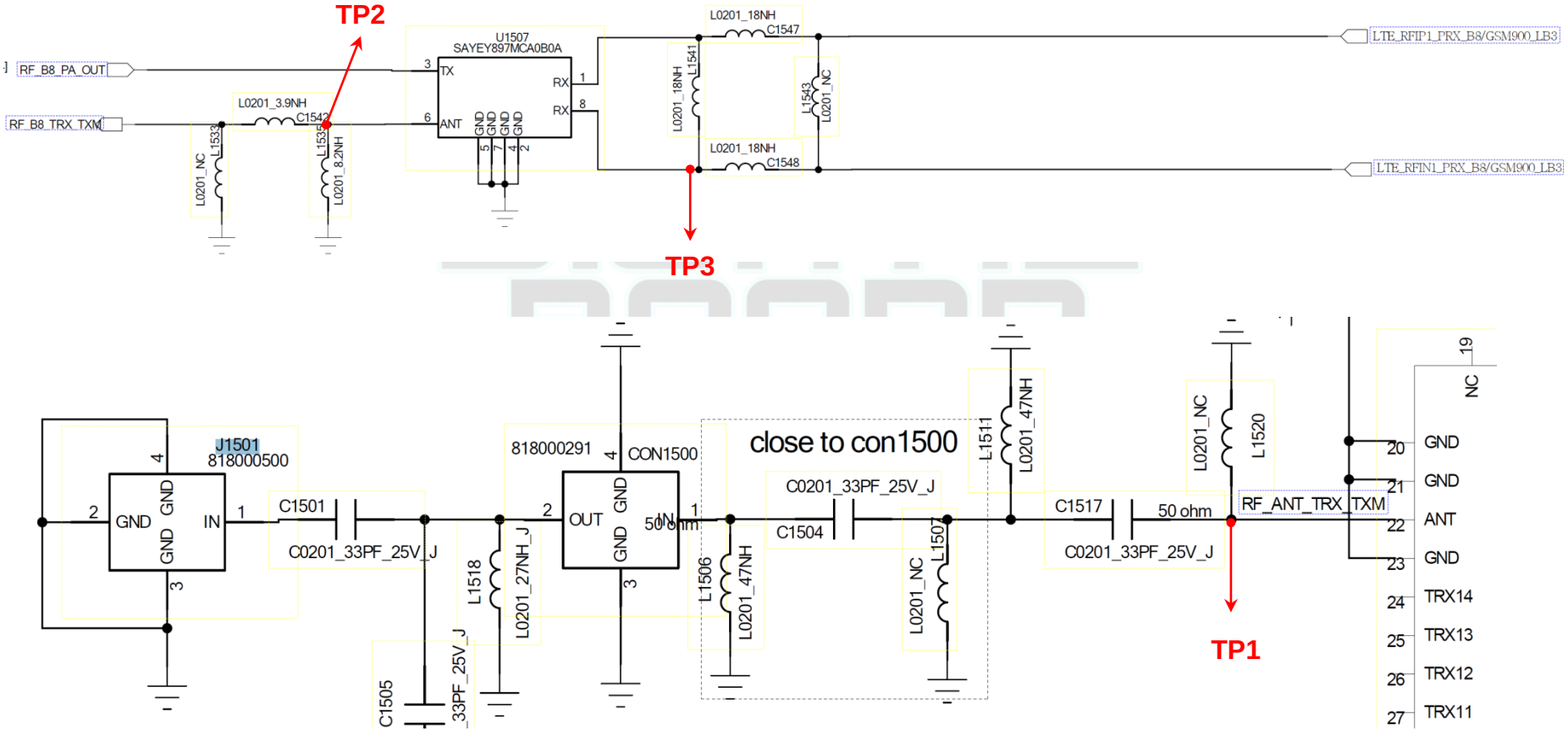

Copyright © 2017 LG Electronics. Inc. All right reserved. Only training and service purposes

3.5 WCDMA RF PART

3.5.2 WCDMA RF Part TX PATH (B1/B5/B8)

2) WCDMA TX Path

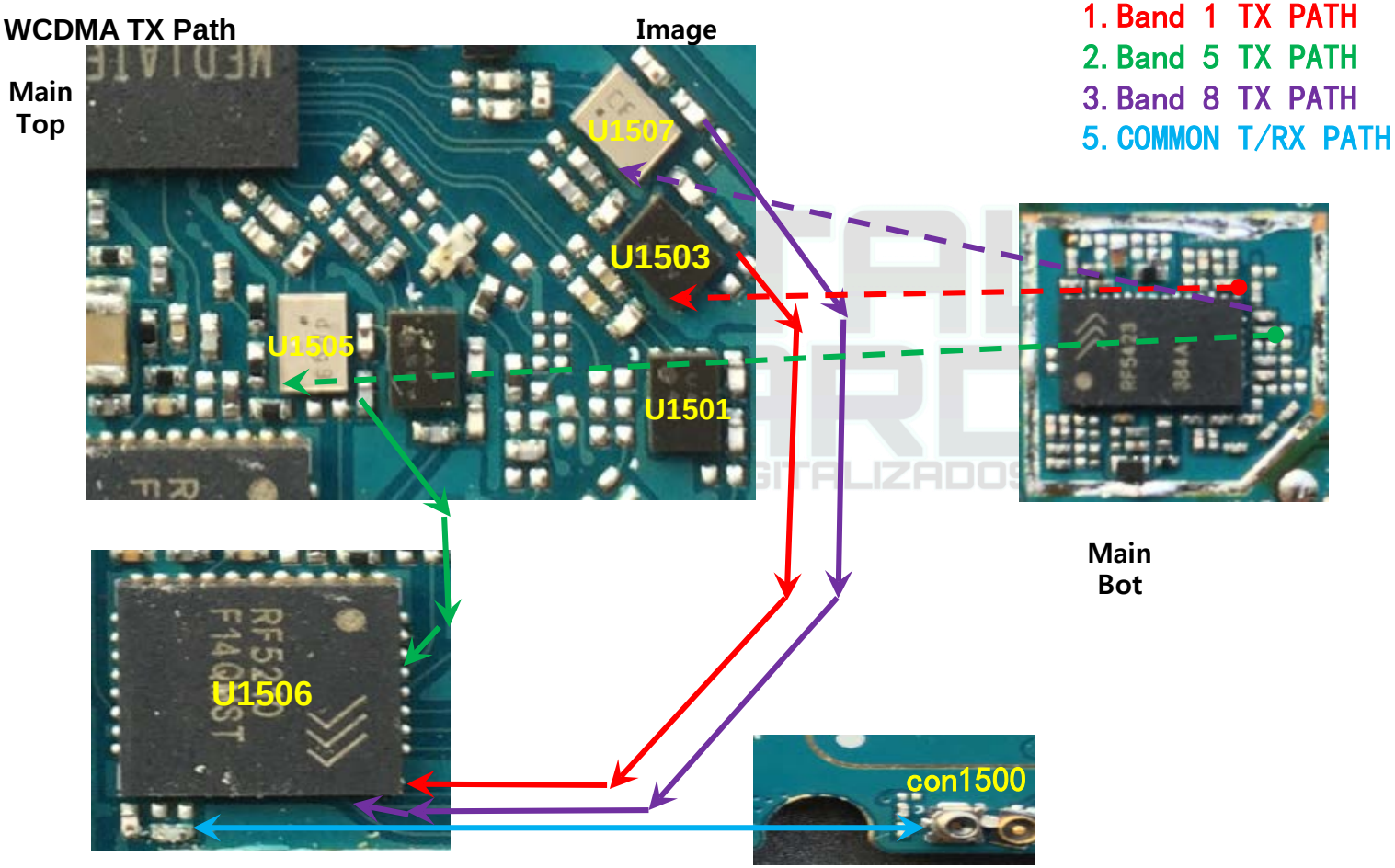

Copyright © 2017 LG Electronics. Inc. All right reserved. Only training and service purposes

3.5 WCDMA RF PART

3.5.2.1 Checking WCDMA PAM DC Power & Control Circuit

Checking Flow

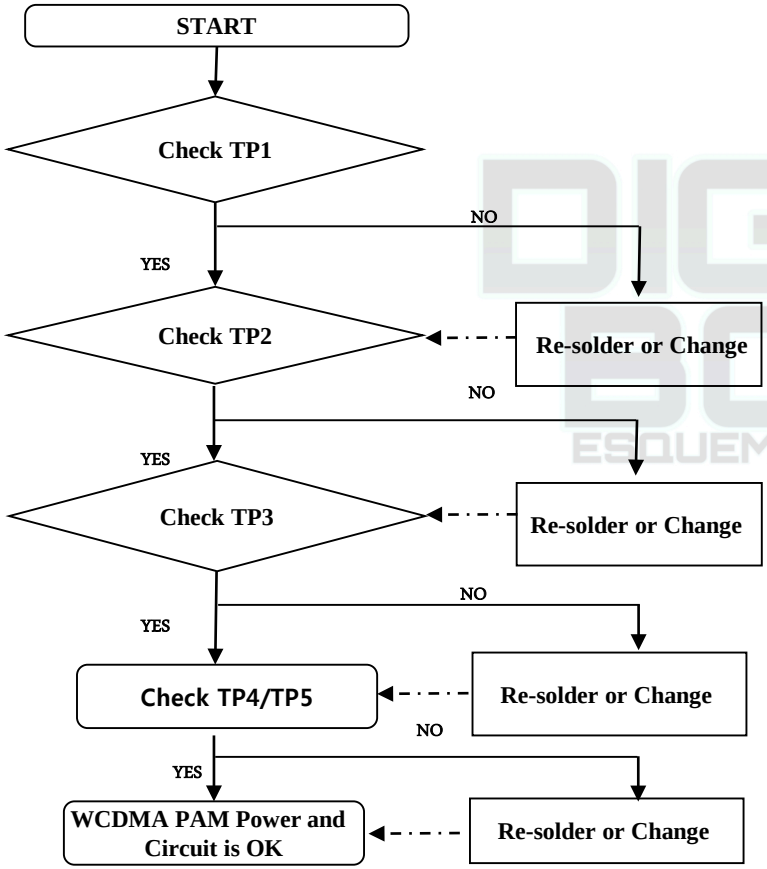

Image

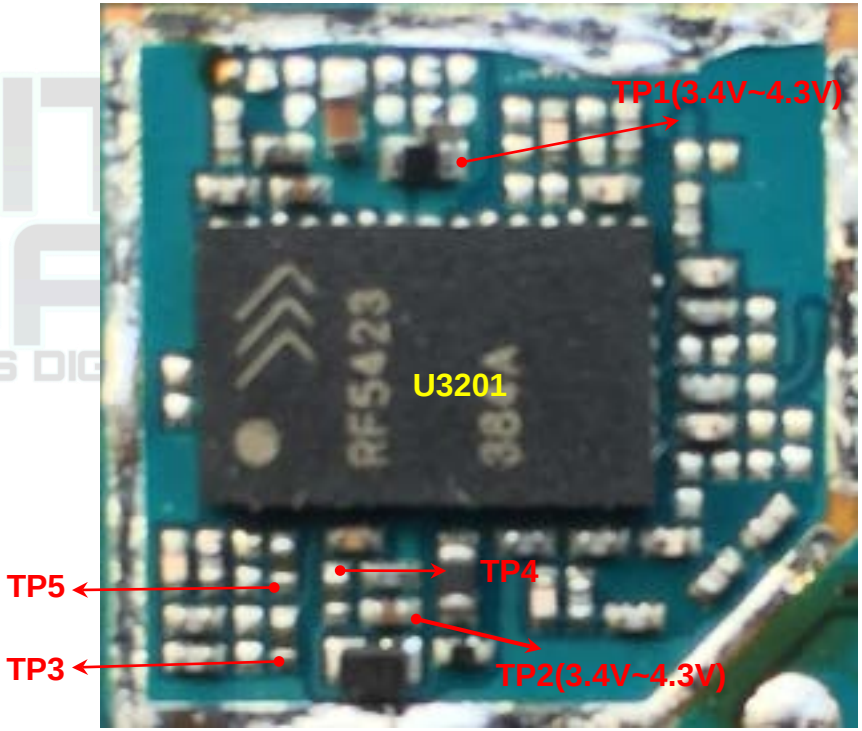

Copyright © 2017 LG Electronics. Inc. All right reserved. Only training and service purposes

3.5 WCDMA RF PART

3.5.2.1 Checking WCDMA PAM DC Power & Control Circuit

Circuit Diagram

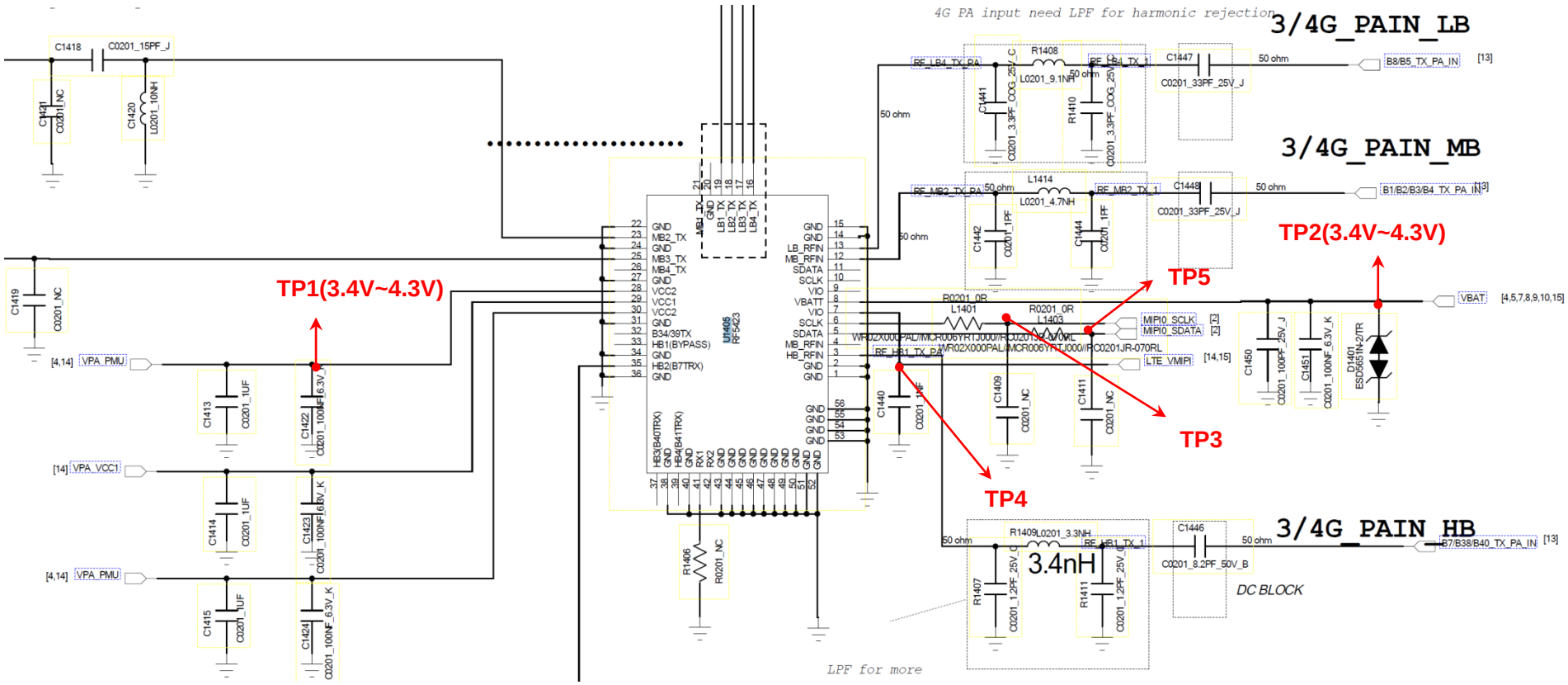

Copyright © 2017 LG Electronics. Inc. All right reserved. Only training and service purposes

3.5 WCDMA RF PART

3.5.2.2 Checking RF signal path(SW)

Checking Flow	Image
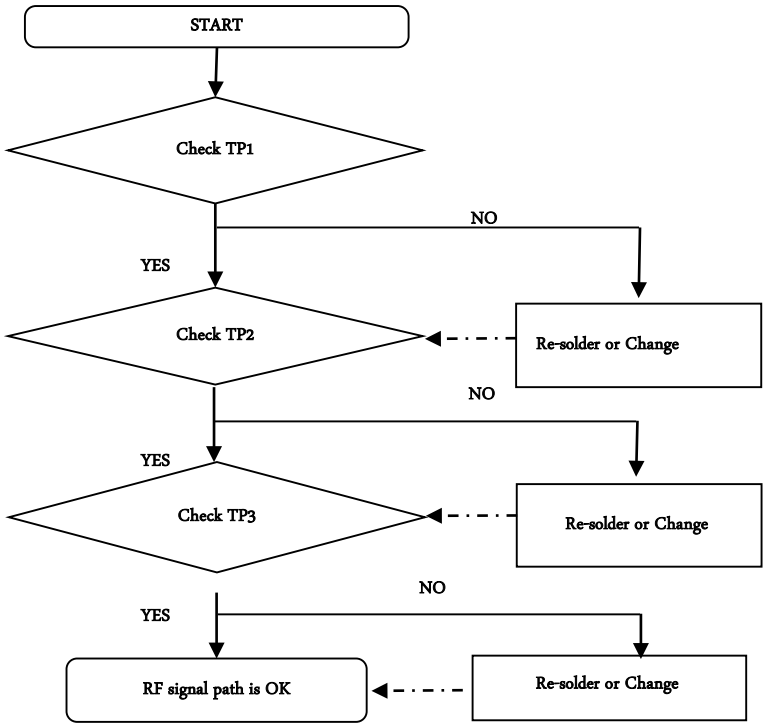	**Refer to 3.5.1.1**
	Circuit Diagram
	Refer to 3.5.1.1

Copyright © 2017 LG Electronics. Inc. All right reserved. Only training and service purposes

3.5 WCDMA RF PART

3.5.2.3 Checking RF signal path

Checking Flow

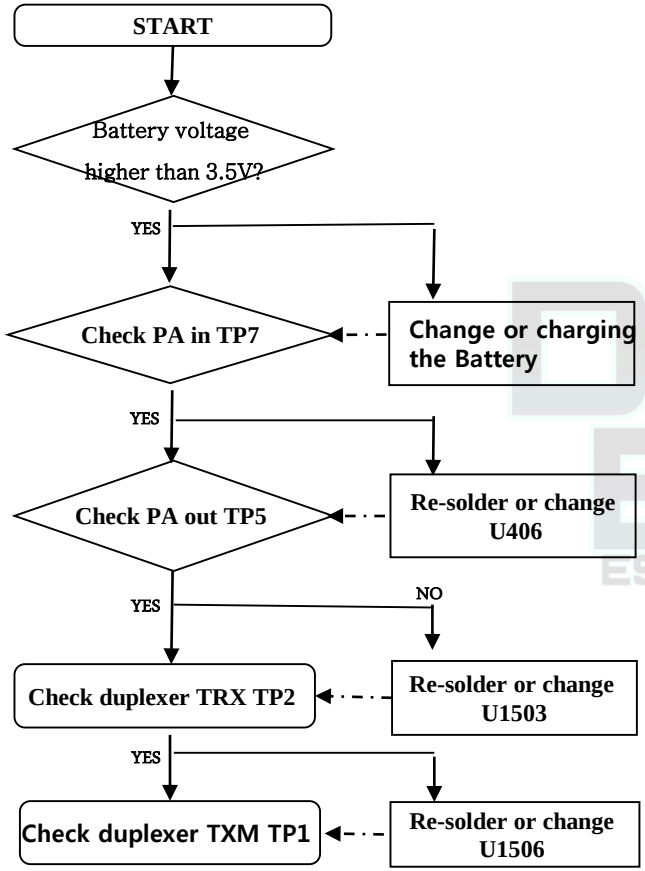

Main Top

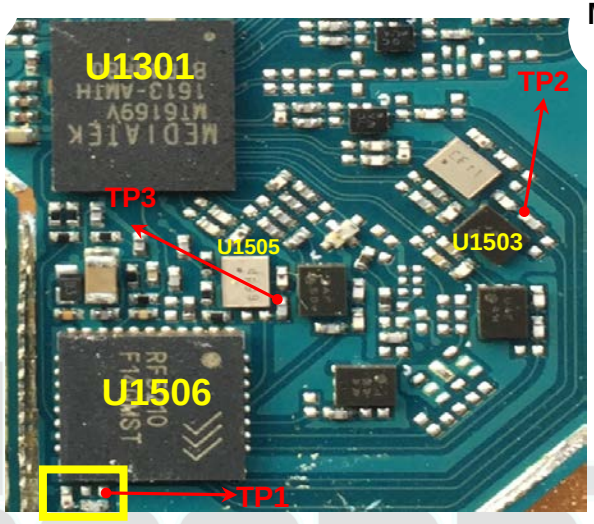

RF Matching Component

Main Bot

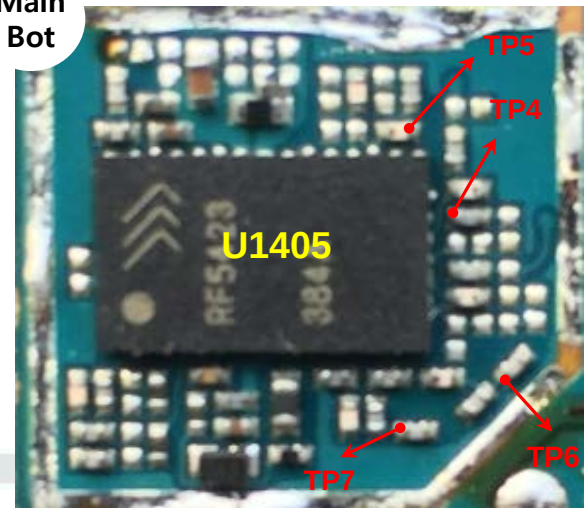

Circuit Diagram

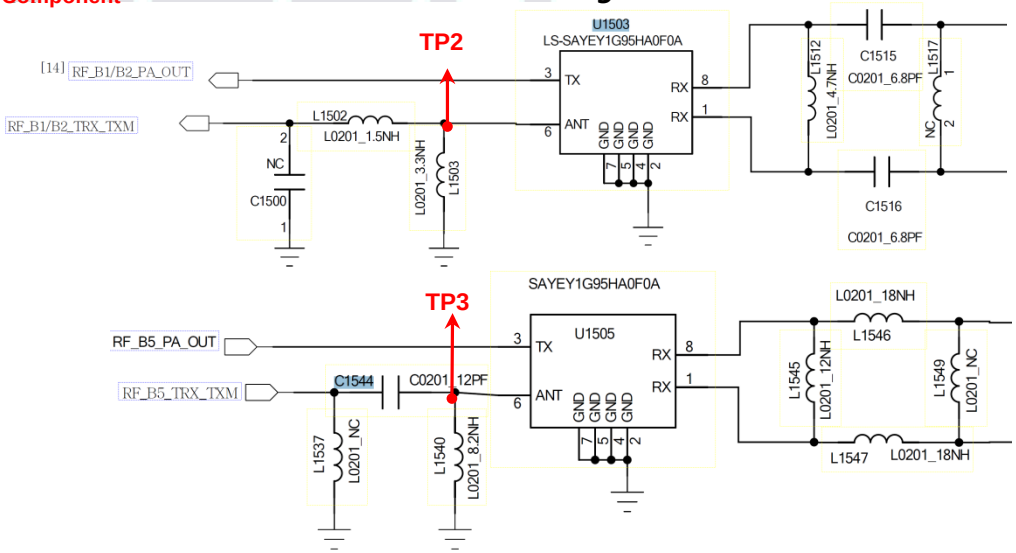

Copyright © 2017 LG Electronics. Inc. All right reserved. Only training and service purposes

3.5 WCDMA RF PART

3.5.2.3 Checking RF signal path

Circuit Diagram

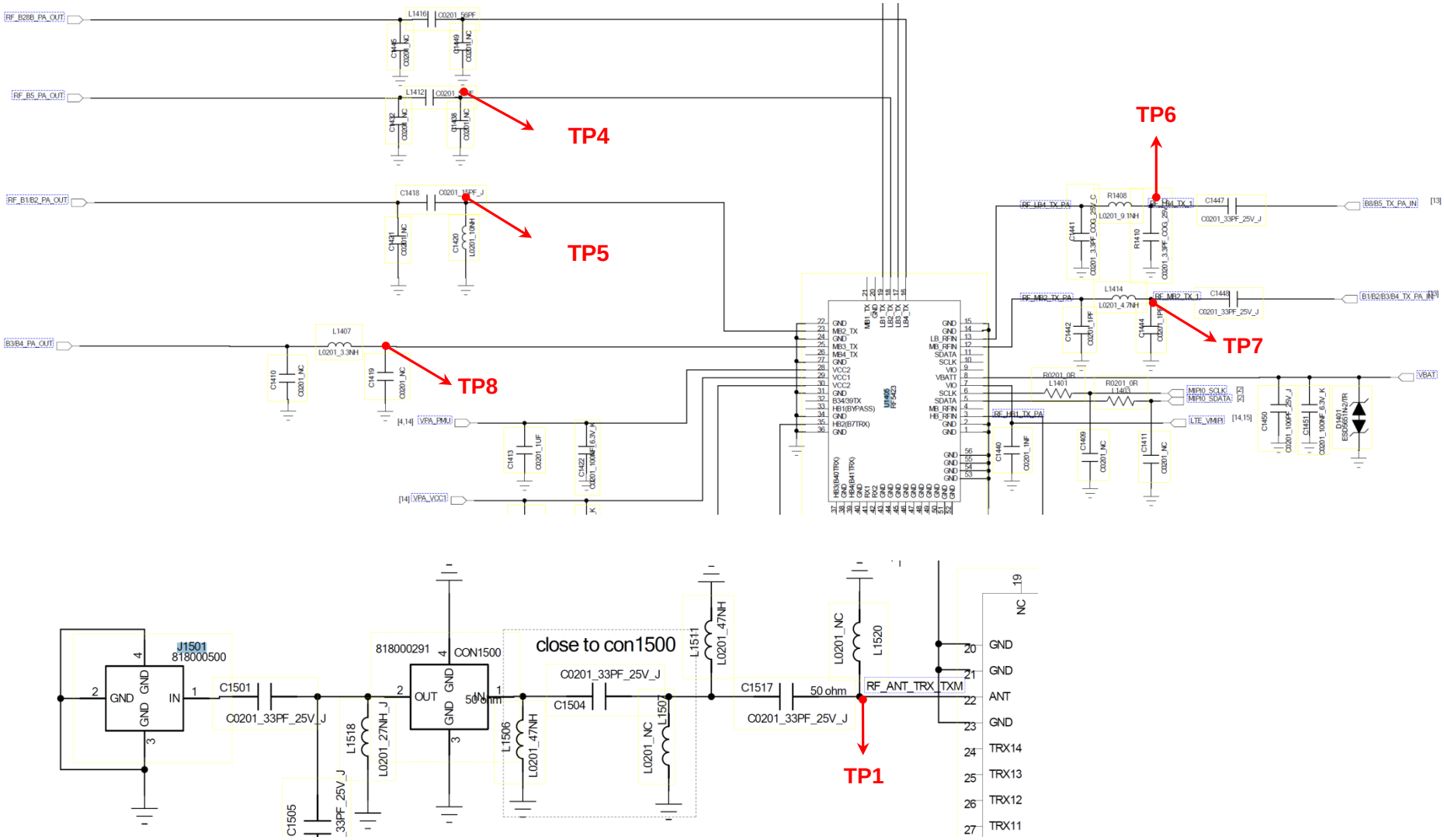

Copyright © 2017 LG Electronics. Inc. All right reserved. Only training and service purposes

3.6 Connectivity PART

3.6. 1. Checking Connectivity DC Power & TCXO Circuit

Checking Flow

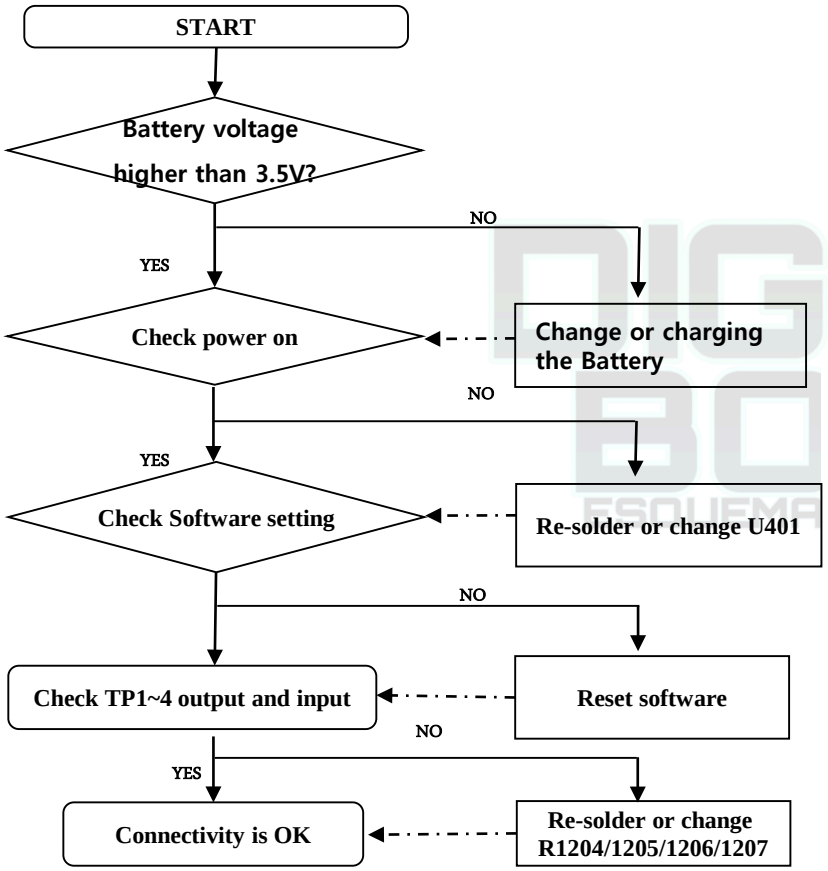

Image

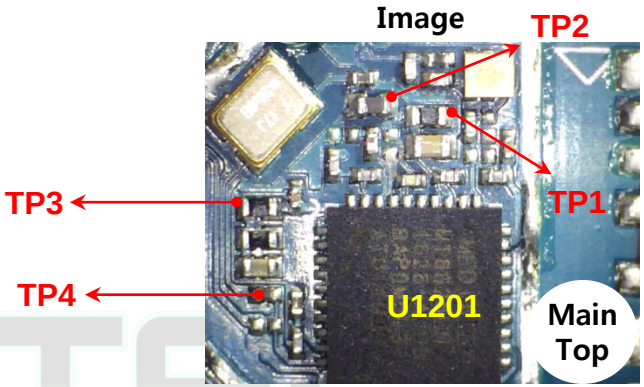

Circuit Diagram

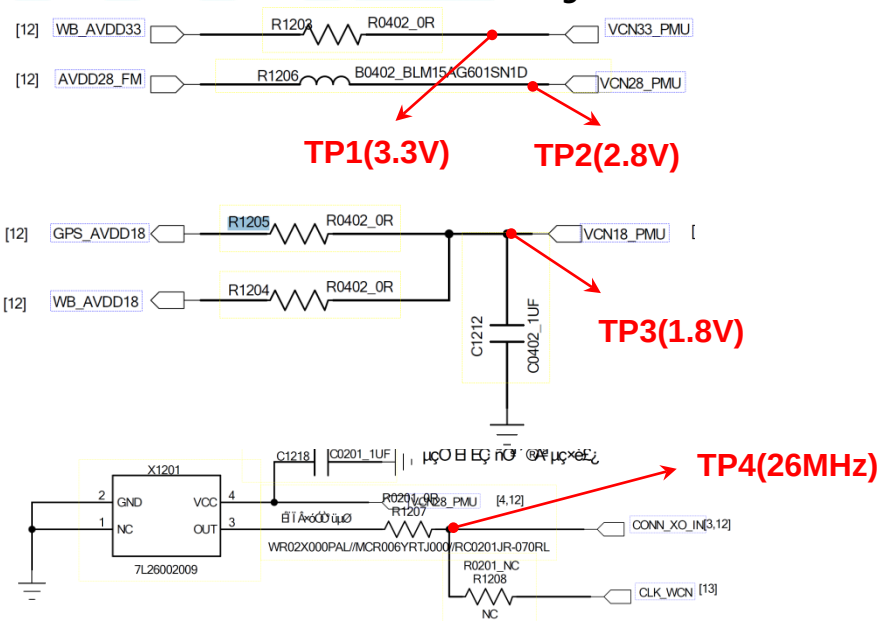

Copyright © 2017 LG Electronics. Inc. All right reserved. Only training and service purposes

3.6 Connectivity PART

3.6. 2. 1. BT&WIFI Trouble Shooting

BT/WIFI Signal Path

Image

Main Top

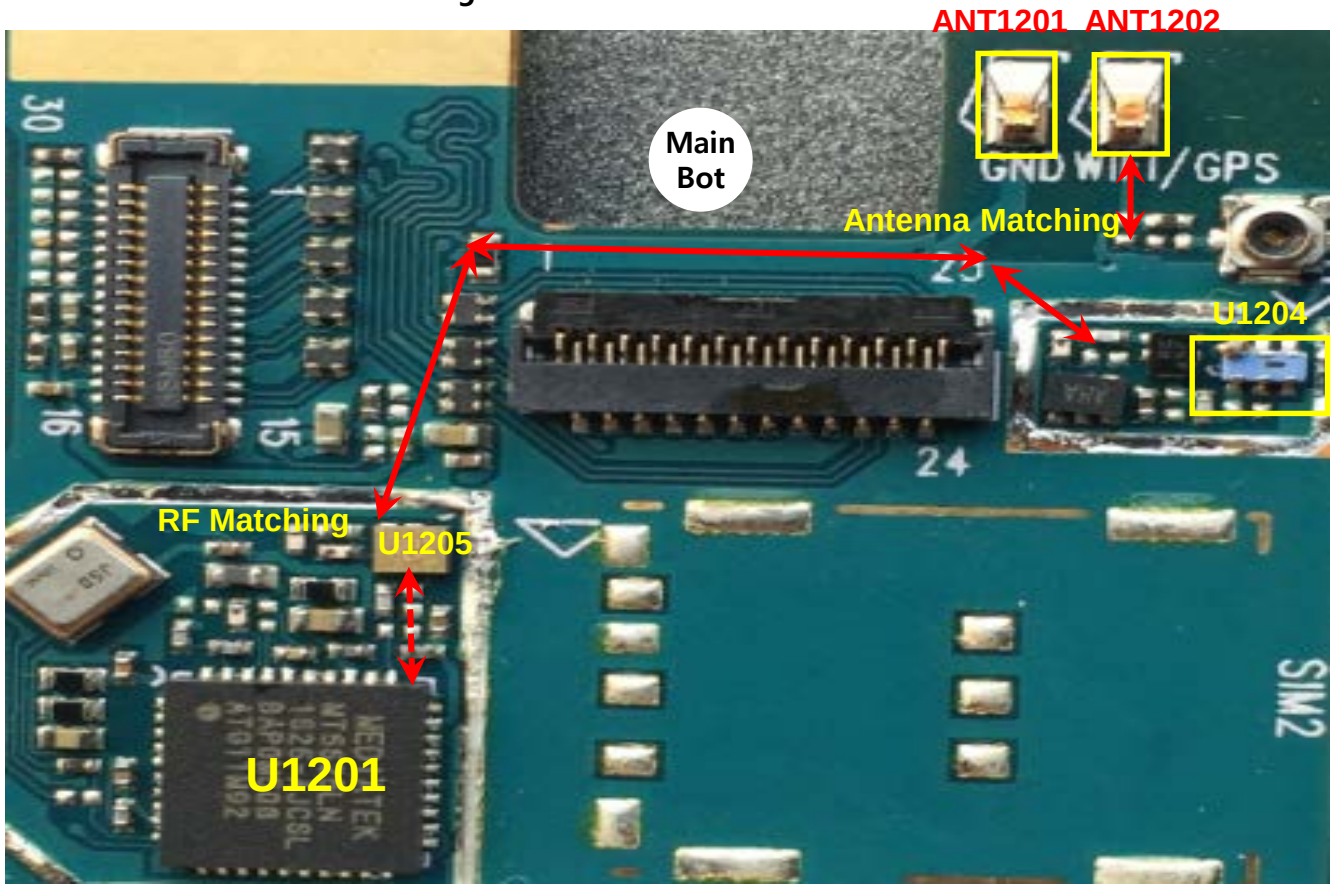

Copyright © 2017 LG Electronics. Inc. All right reserved. Only training and service purposes

3.6. Connectivity PART

3.6. 2. 2. BT&WIFI Trouble Shooting

Checking Flow

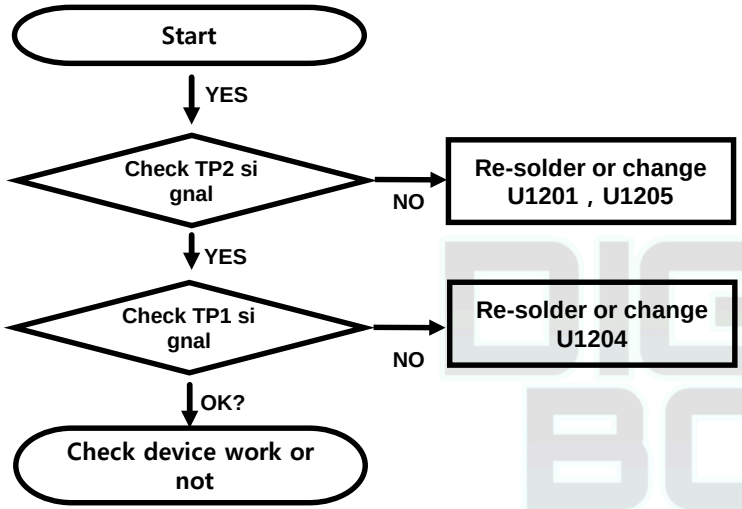

Image

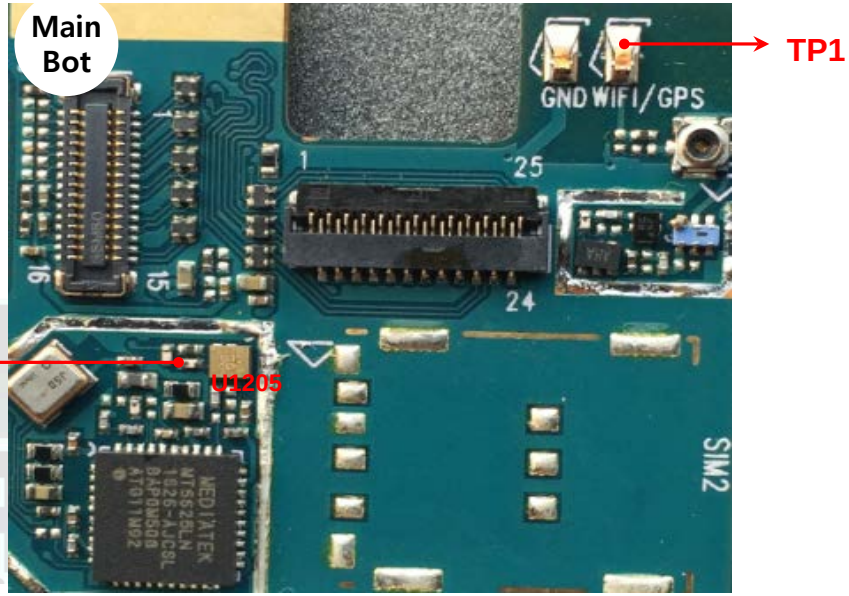

Circuit Diagram

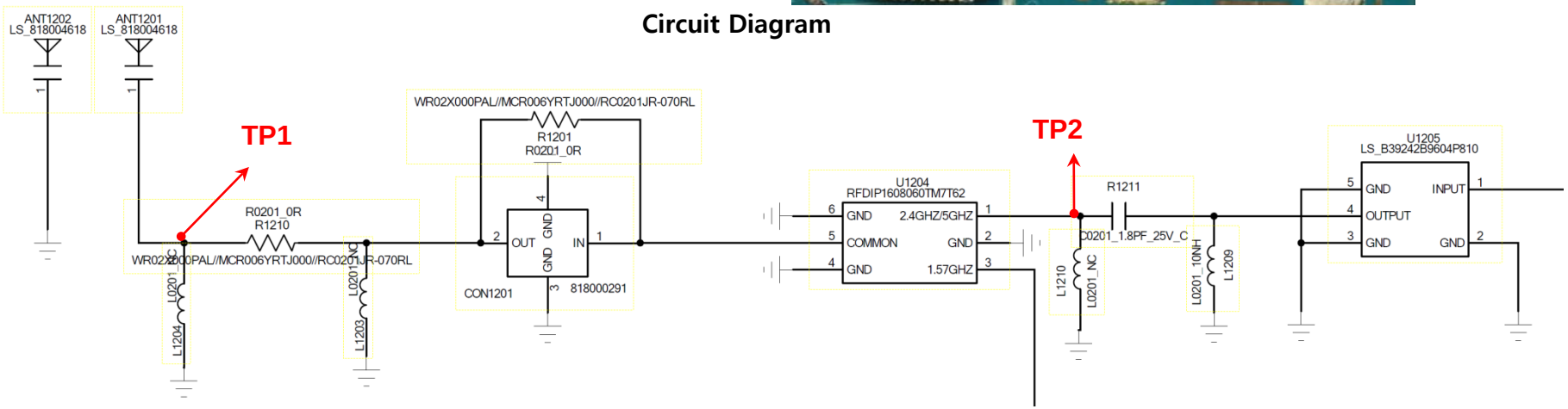

Copyright © 2017 LG Electronics. Inc. All right rese rved. Only training and service purposes

3.6 Connectivity PART

3.6. 3. 1. GPS Trouble Shooting

GPS Signal Path

Image

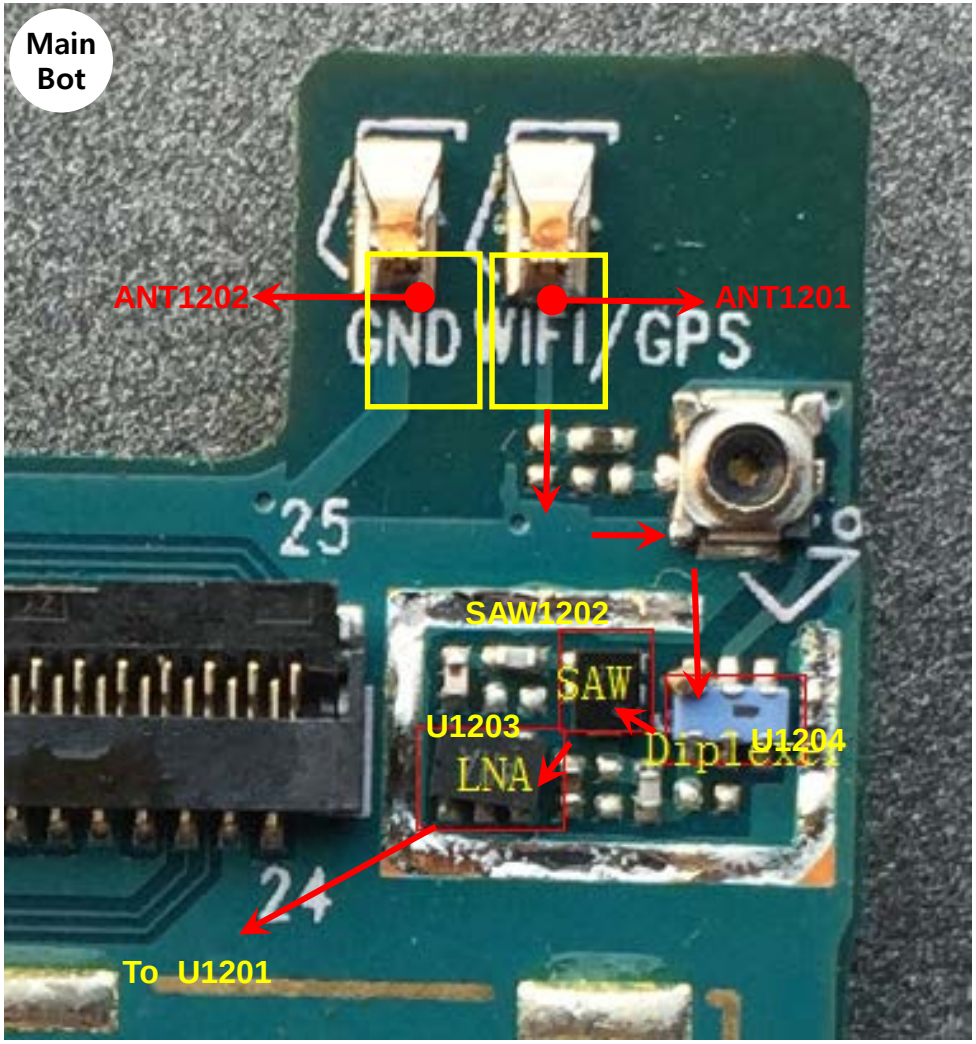

Copyright © 2017 LG Electronics. Inc. All right reserved. Only training and service purposes

3.6 Connectivity PART

3.6. 3. 2. GPS Trouble Shooting

Checking Flow

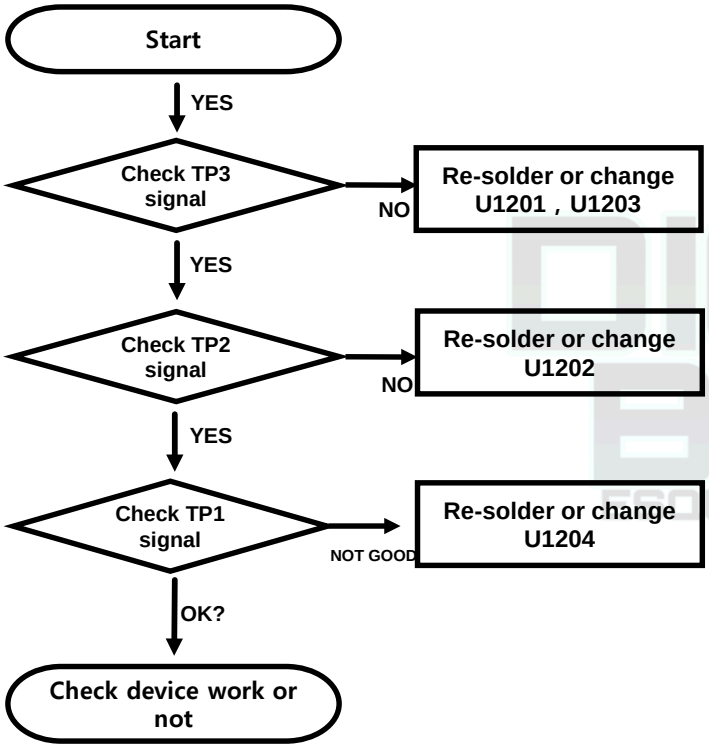

Image

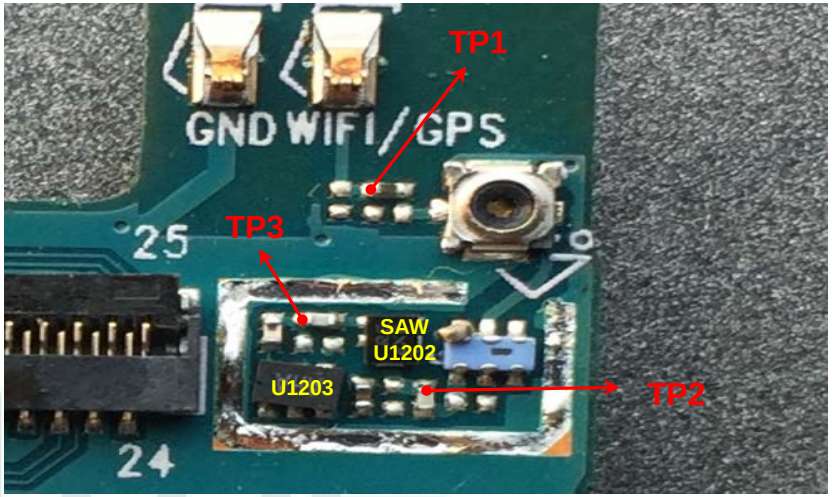

Circuit Diagram

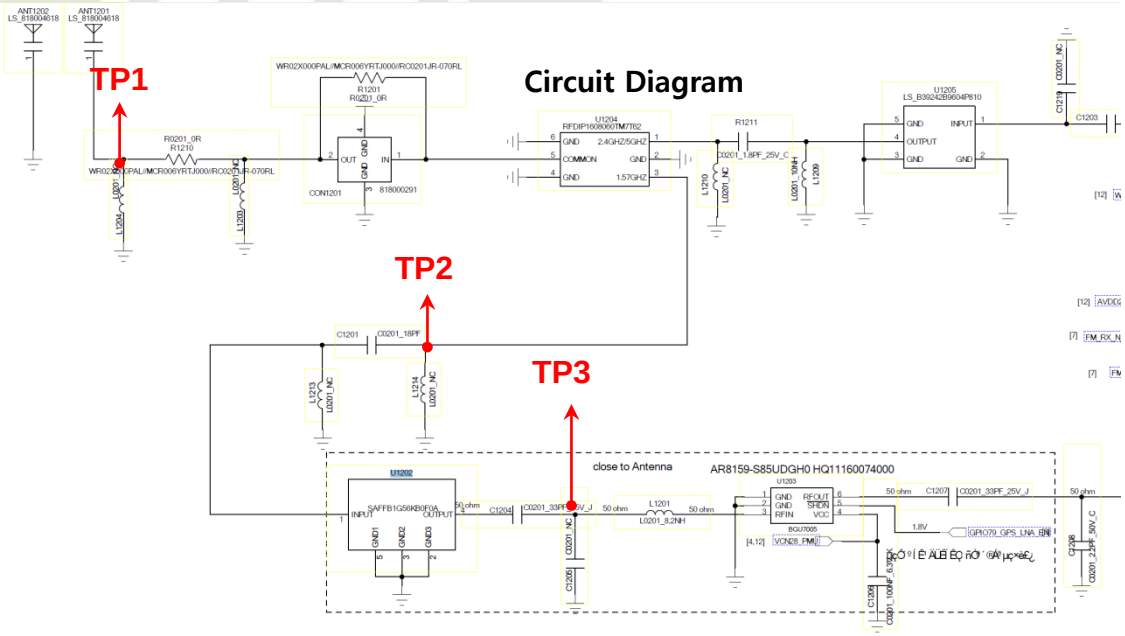

Copyright © 2017 LG Electronics. Inc. All right reserved. Only training and service purposes

3.6 Connectivity PART

3.6. 4. 1. FM Trouble Shooting

Checking Flow

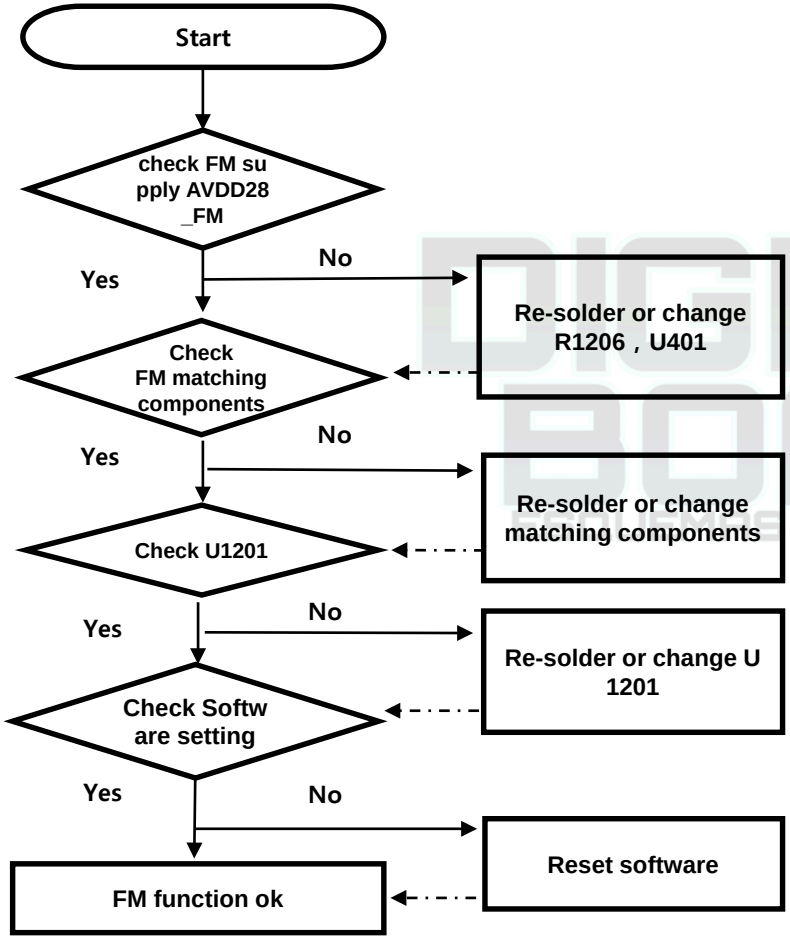

Image

FM Signal Path

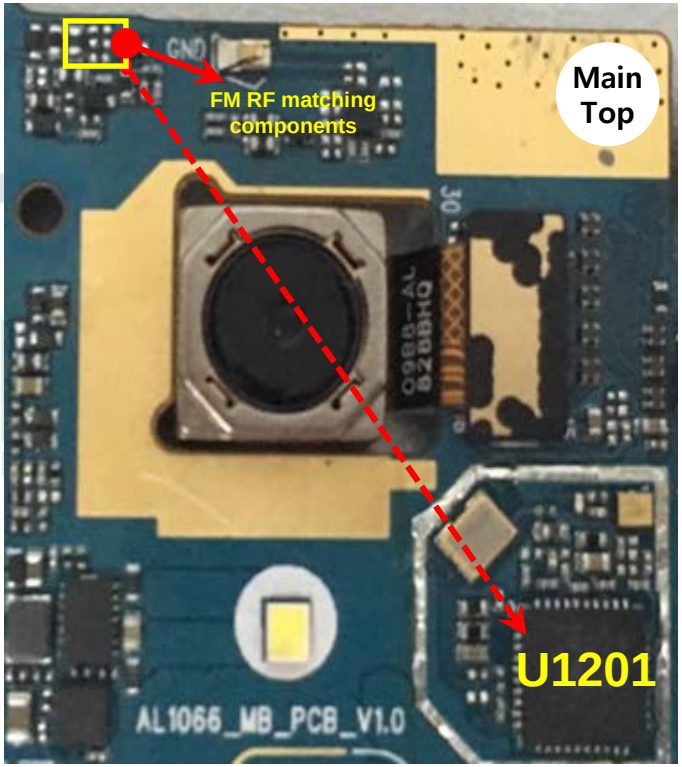

Copyright © 2017 LG Electronics. Inc. All right rese rved. Only training and service purposes

3.7 Power

Checking Power signal(Battery connector, PMU, Clock)

Checking Flow

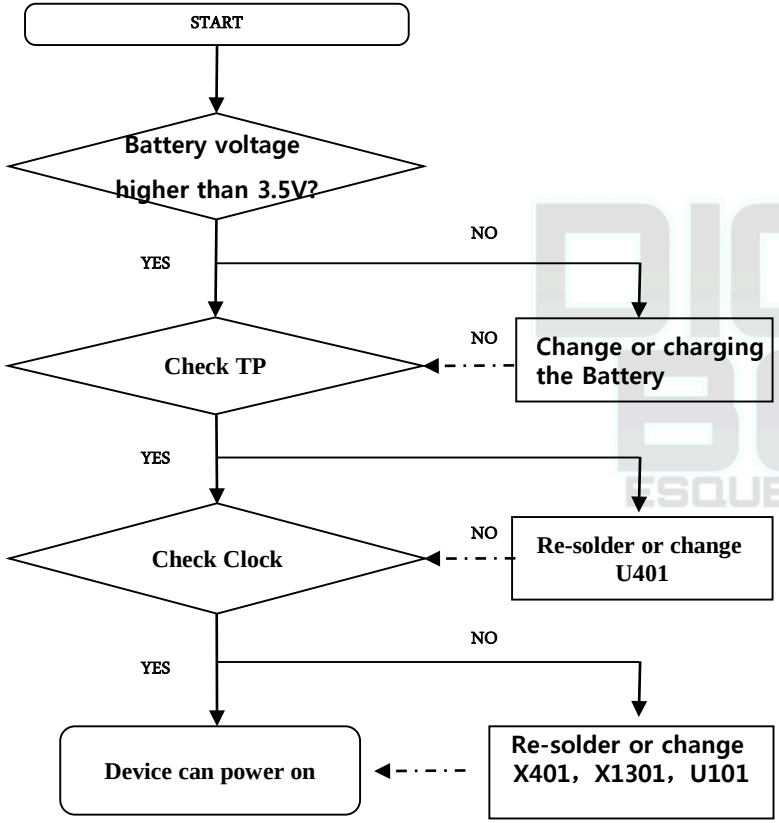

Image

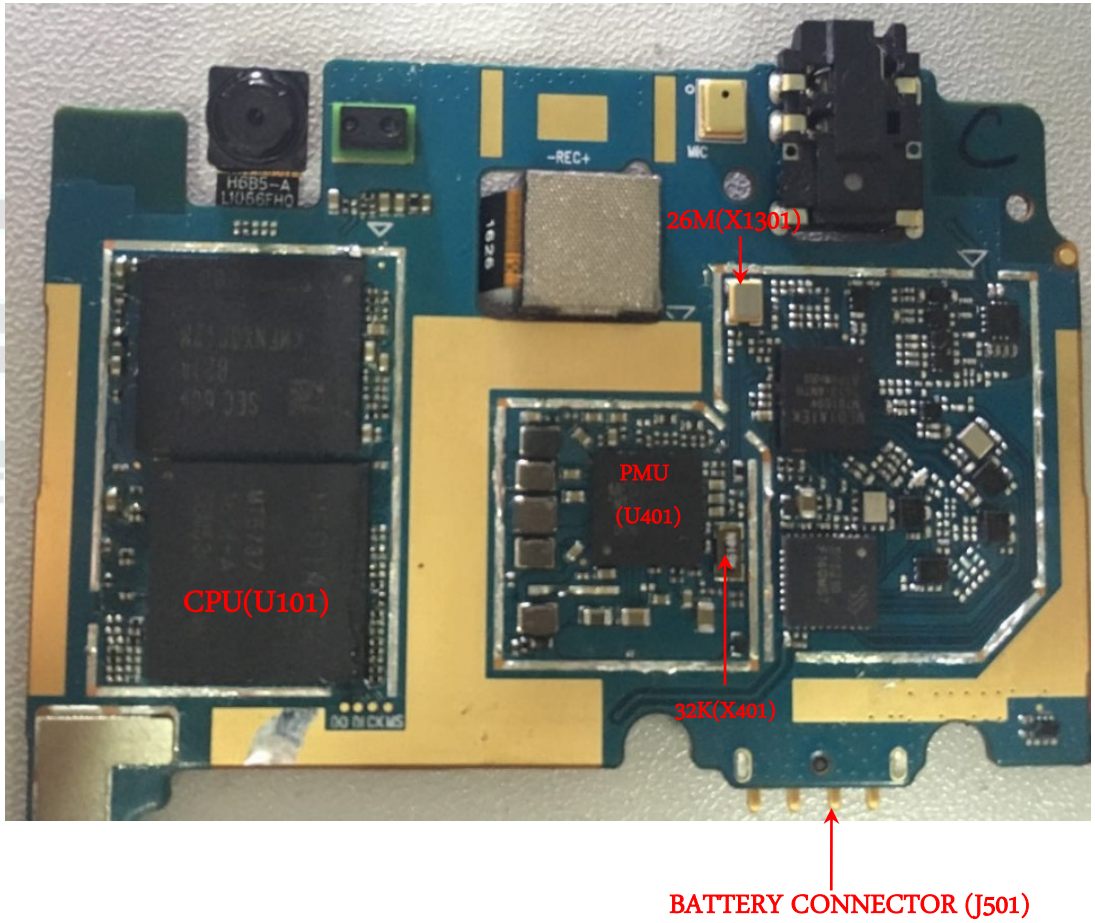

Copyright © 2017 LG Electronics. Inc. All right reserved. Only training and service purposes

3.7 Power

Checking Power signal(Battery connector, PMU, Clock)

Check Output Voltage of U401 (PMU)

Power on voltage check list				
Power domain	**Configurable Voltage**	**Signal Name**	**Measurment Location**	**TP**
VRTC	2.8 V	VRTC	C417	TP1
VPROC	0.75 ~ 1.3V (25mV/step)	VPROC_PMU	L401	TP2
VIO18	1.8 V	VIO18 _PMU	C416	TP3
VIO28	2.8 V	VIO28_PMU	C424	TP4
VM	1.2 V	DVDD12_EMI	C605	TP5
VCORE	1.15 V	VCORE__PMU	L403	TP6
VUSB	3.3V	VUSB33_PMU	C157	TP7
VTCXO	2.8V	VTCXO_0	C1304	TP8
VMC	3V	VMC_PMU	C153	TP9
VEMC_3V3	3 V	VEMC_3V3	C612	TP10

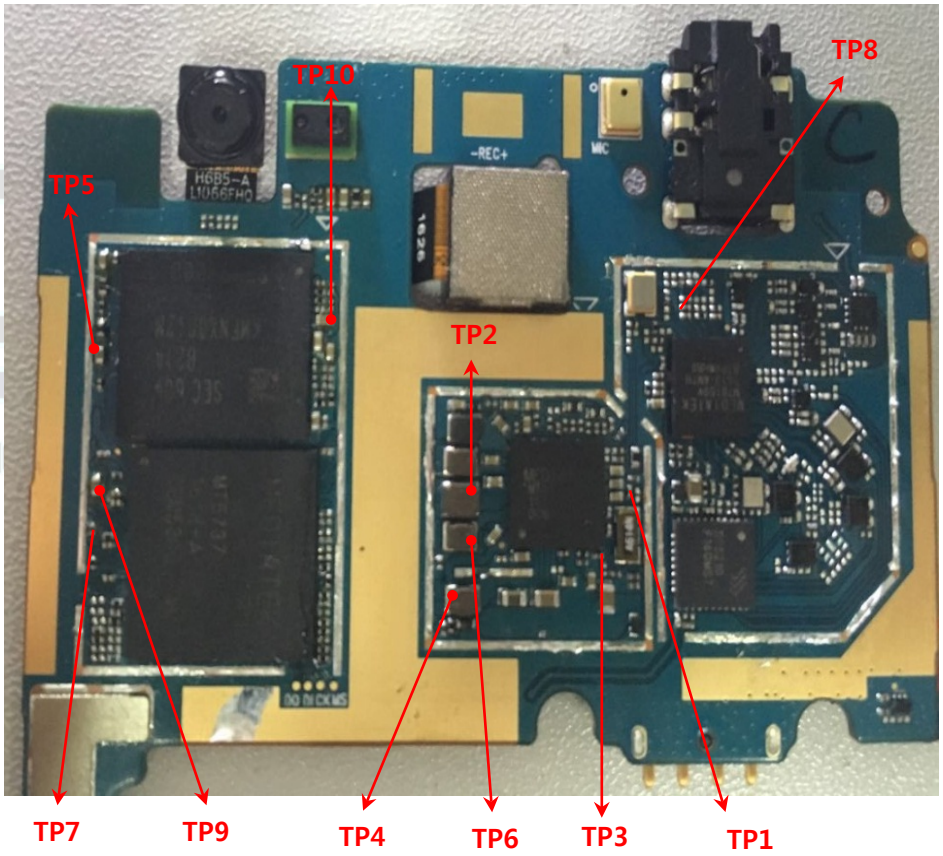

Oscillate frequency measurement

Signal name	Description	Frequency MHz	Measurment Location	Check Clock Result
X401 32.768 KHz crystal		32.74kHz	C419	
X1201 26MHz Crystal(WCN)		26.03MHz	R1207	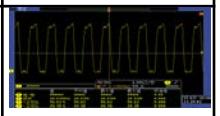
X1301 26MHz Crystal(Transceiver)		26.1MHz	C1309	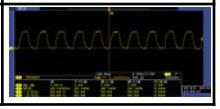

Copyright © 2017 LG Electronics. Inc. All right reserved. Only training and service purposes

3.7 Power

Checking Power signal(Battery connector, PMU, Clock)

Circuit Diagram

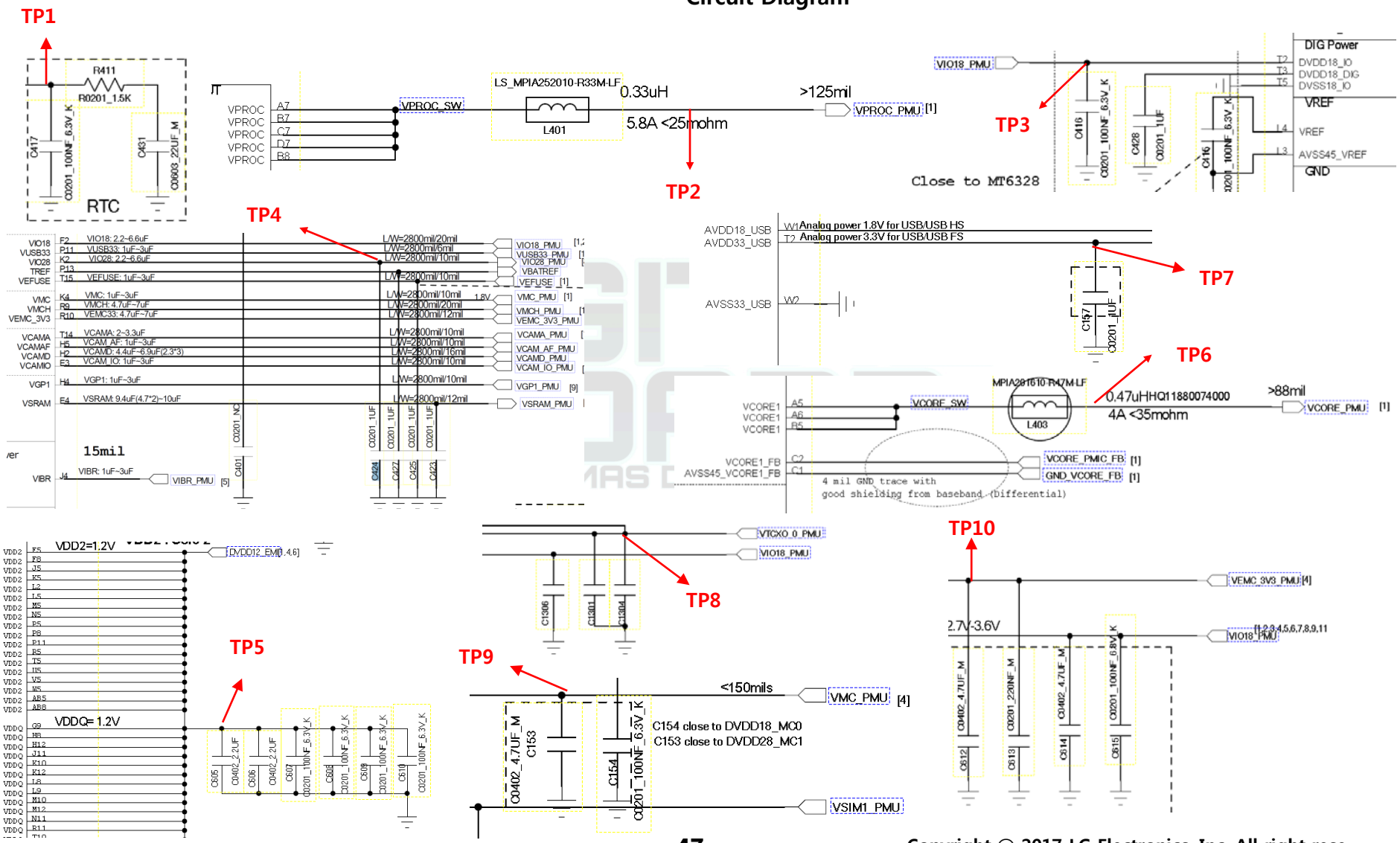

Copyright © 2017 LG Electronics. Inc. All right reserved. Only training and service purposes

3.8 charger

The charging controlled by BB chip MT6737M U101),PMU chip MT6328(U401),charge IC APL3225(U501).

Checking Flow

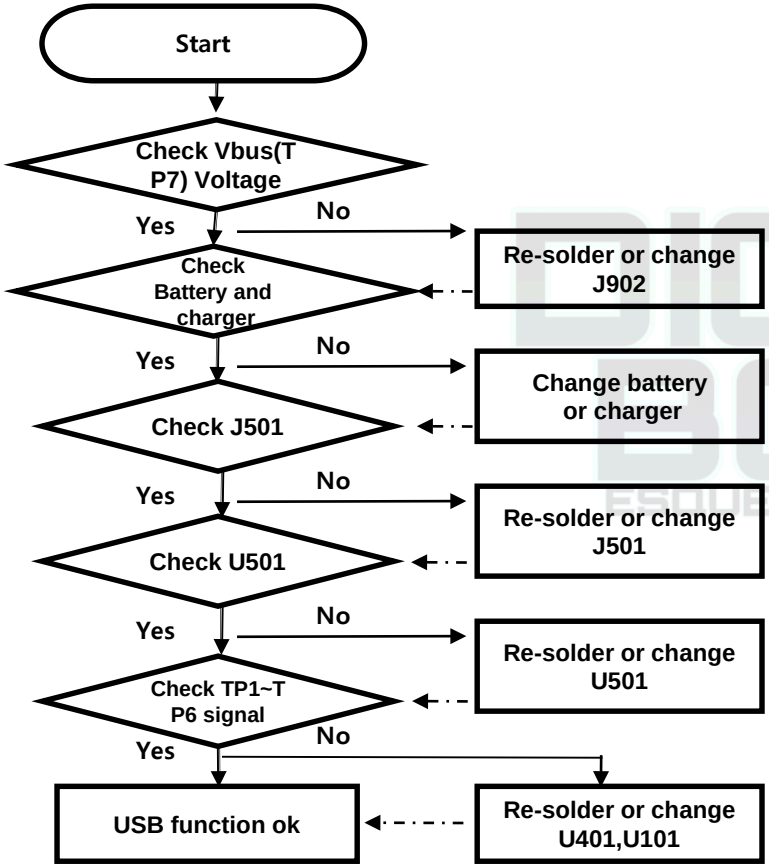

Image

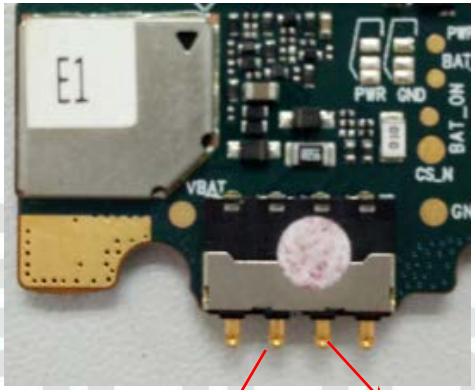

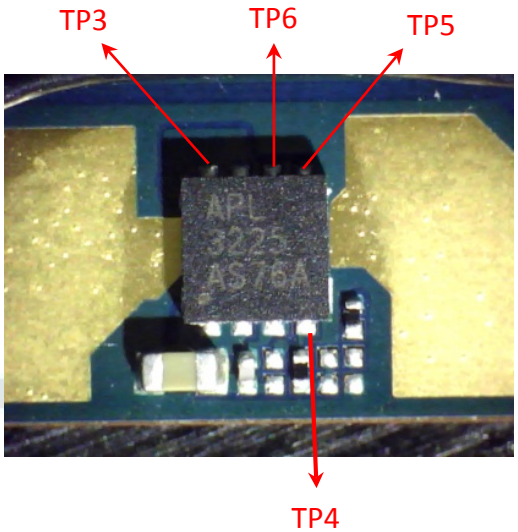

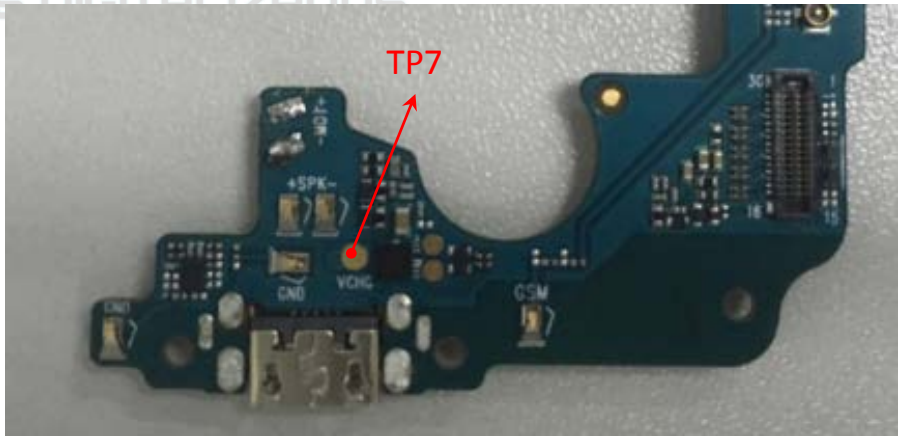

Copyright © 2017 LG Electronics. Inc. All right reserved. Only training and service purposes

3.8 Charger

The charging controlled by BB chip MT6737M U101),PMU chip MT6328(U401),charge IC APL3225(U501).

Circuit Diagram

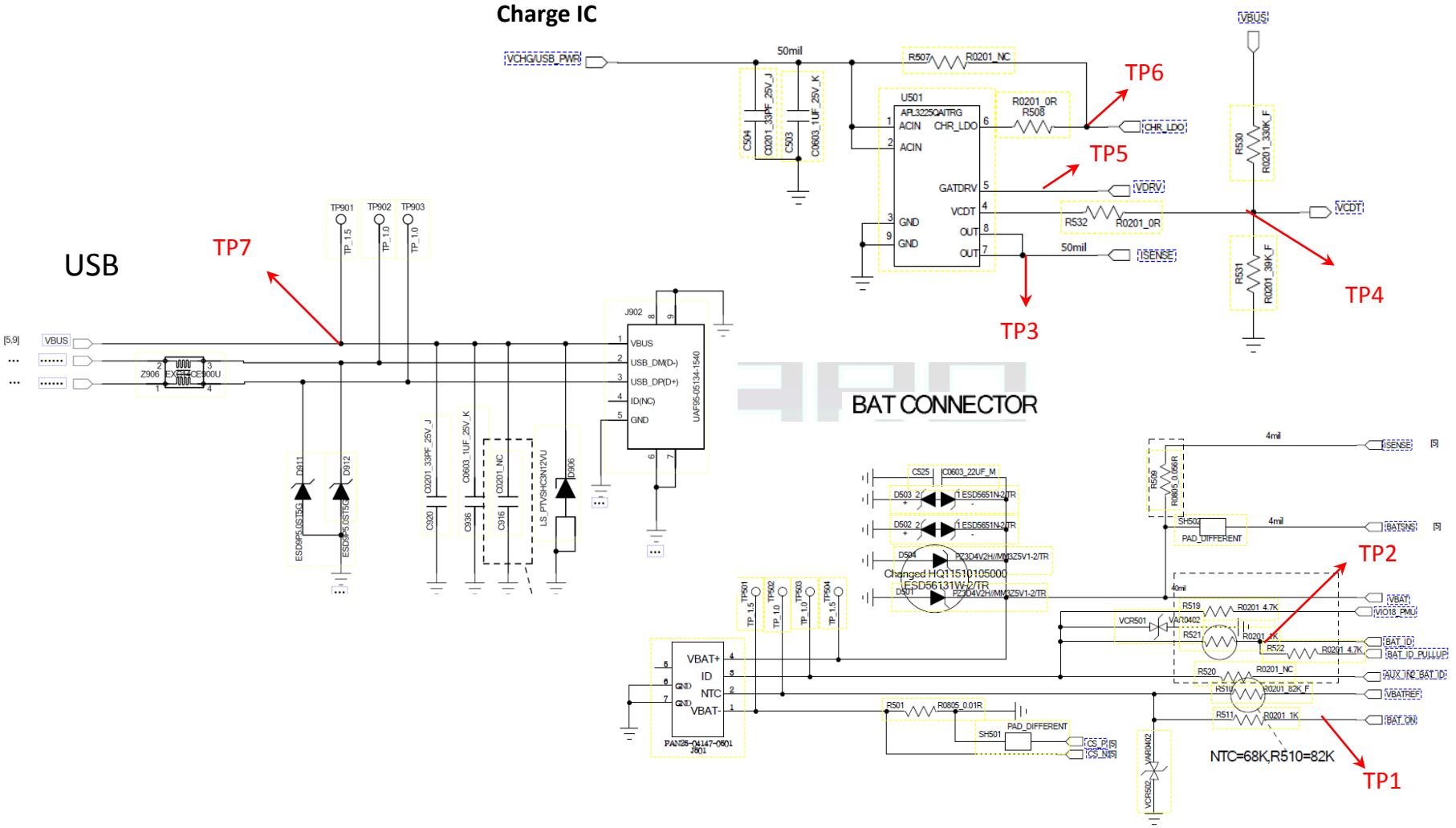

Copyright © 2017 LG Electronics. Inc. All right reserved. Only training and service purposes

3.9 Checking Audio Block

3.9.1 Audio_REC

The REC control signals are generated by PMU chip MT6328(U401), the PMU chip and the receiver are to be checked out.

Checking Flow

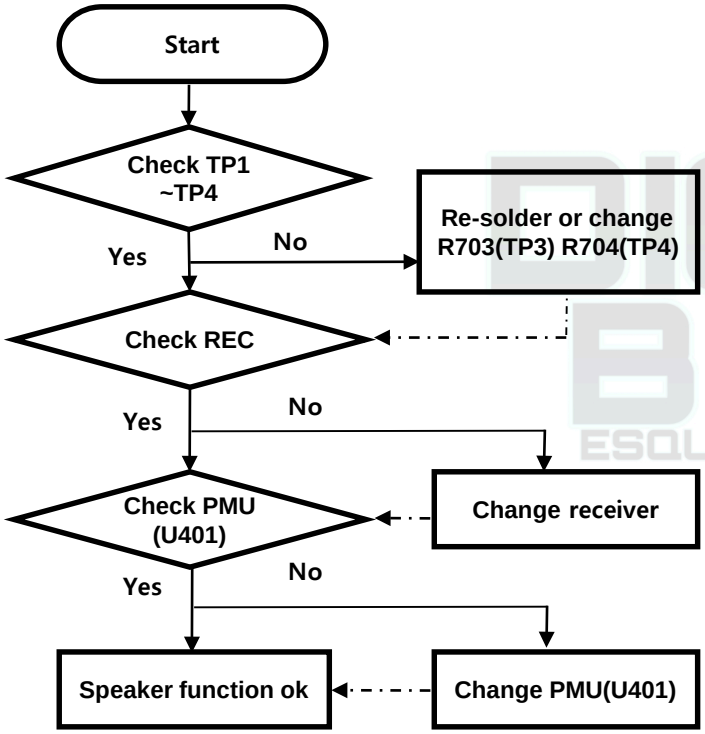

Image

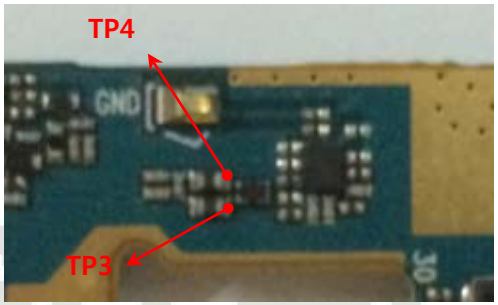

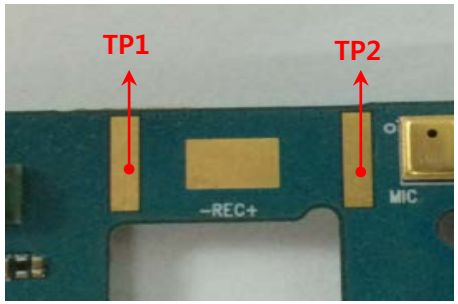

Circuit Diagram

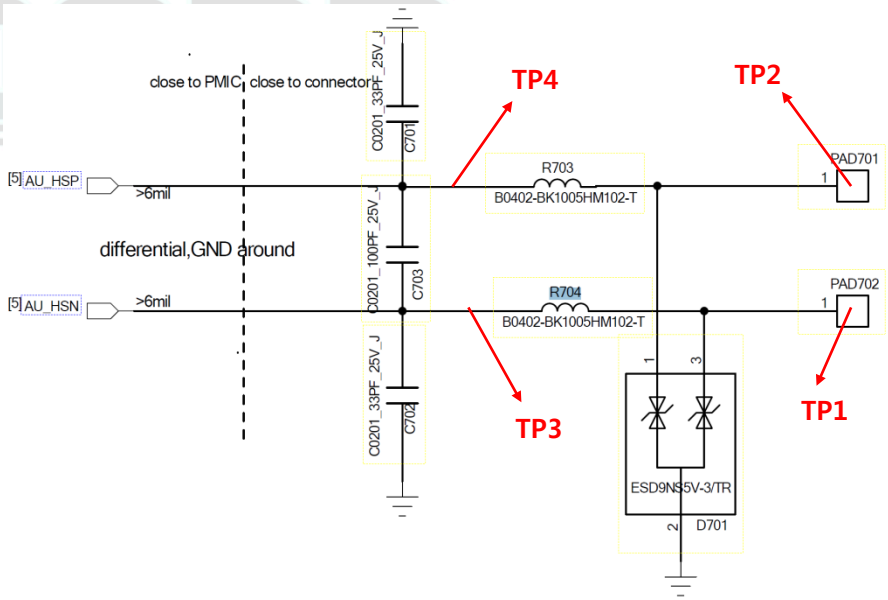

Copyright © 2017 LG Electronics. Inc. All right reserved. Only training and service purposes

3.9 Checking Audio Block

3.9.1 Audio speaker

The Speaker control signals are generated by PMU chip MT6328(U401), the PMU chip and the speaker are to be checked out.

Checking Flow

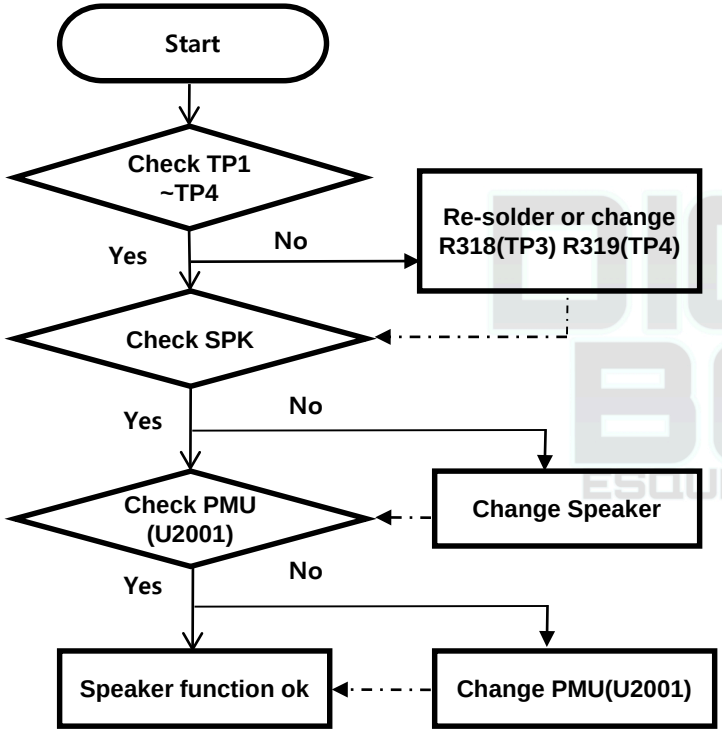

Image

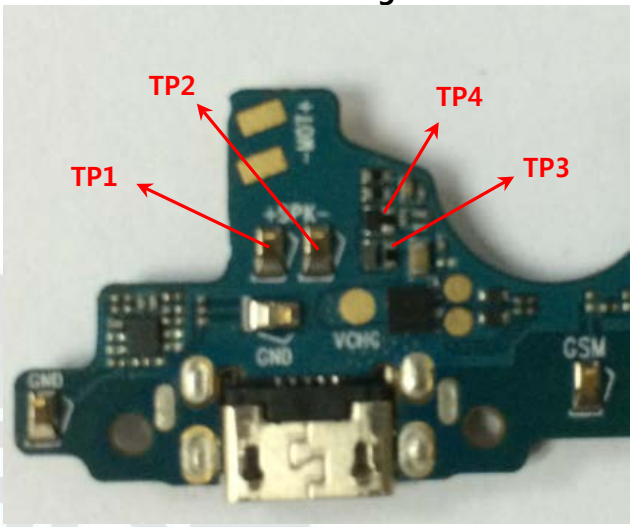

Circuit Diagram

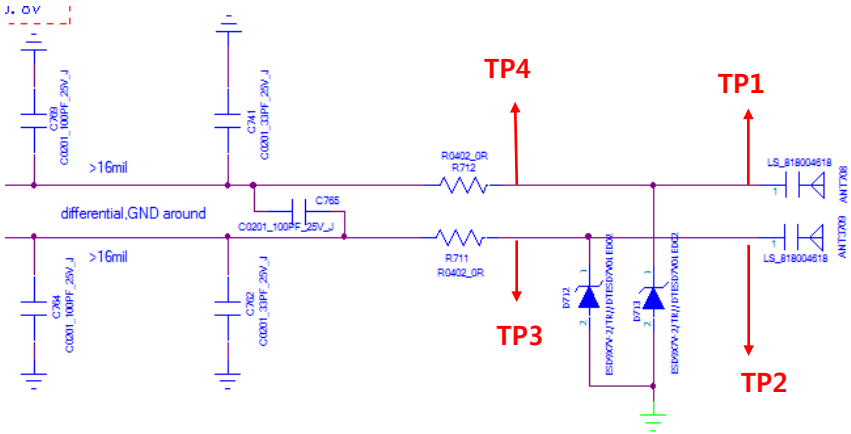

DIGITAL BOARD
ESQUEMAS DIGITALIZADOS

Copyright © 2017 LG Electronics. Inc. All right reserved. Only training and service purposes

3.9 Checking Audio Block

3.9.2 Audio_Main MIC

The MIC control signals are generated by PMU chip MT6328(U401), the PMU chip and the MIC are to be checked out.

Checking Flow

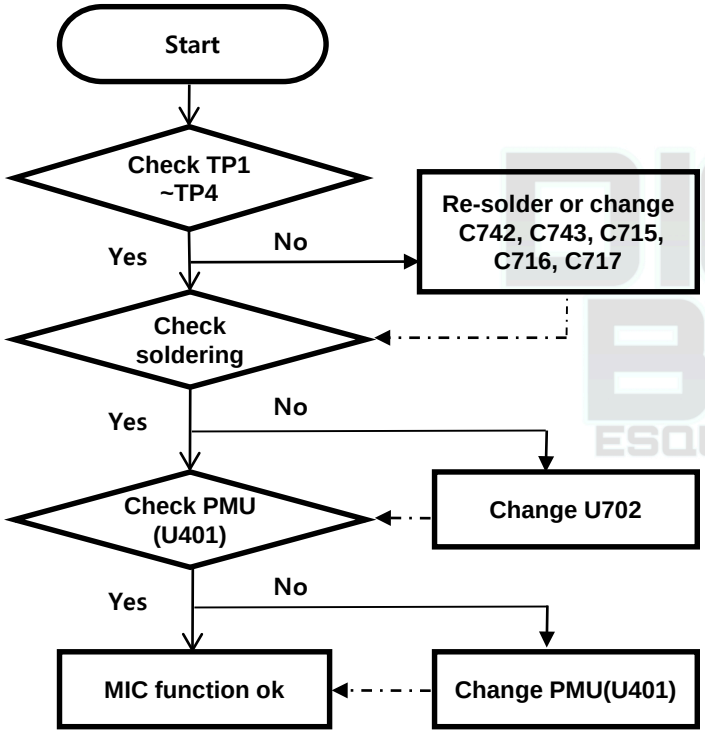

Image

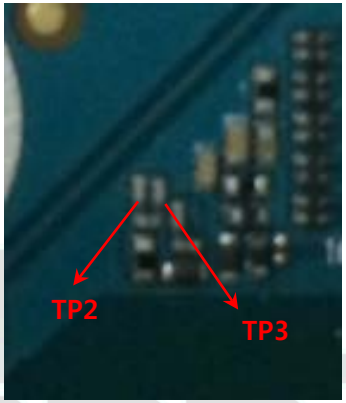

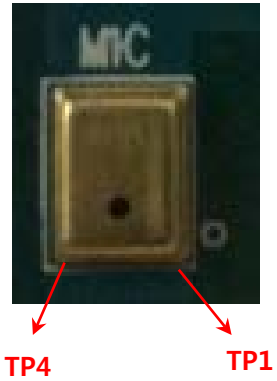

Circuit Diagram

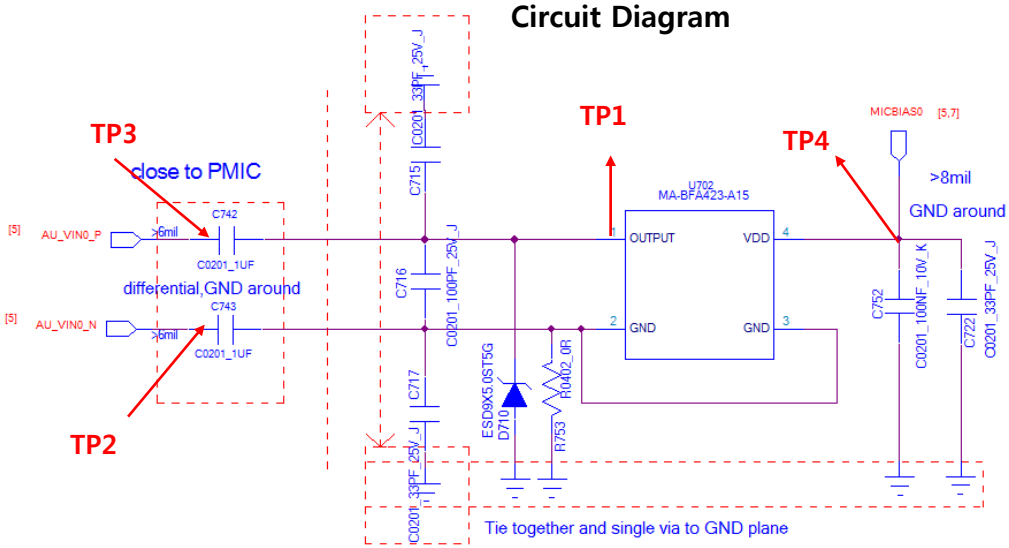

Copyright © 2017 LG Electronics. Inc. All right reserved. Only training and service purposes

3.9 Checking Audio Block

3.9.3 Audio_Ear MIC

Disable detecting headset insert or No sound from Earphone, Check the Ear Mic and PMU(U401).

Checking Flow

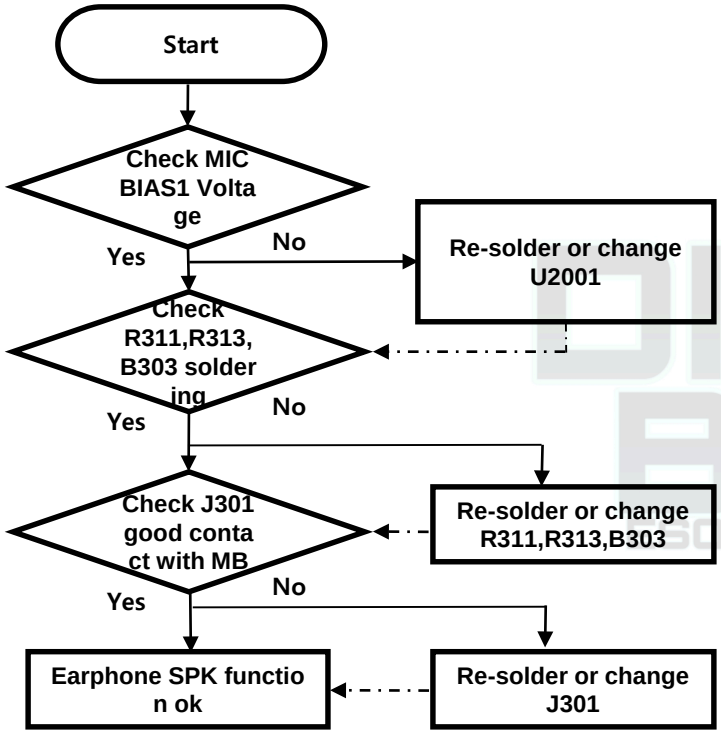

Image

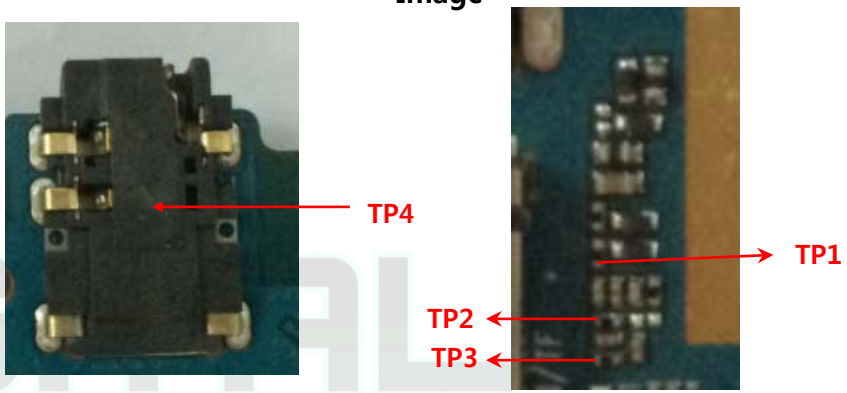

Circuit Diagram

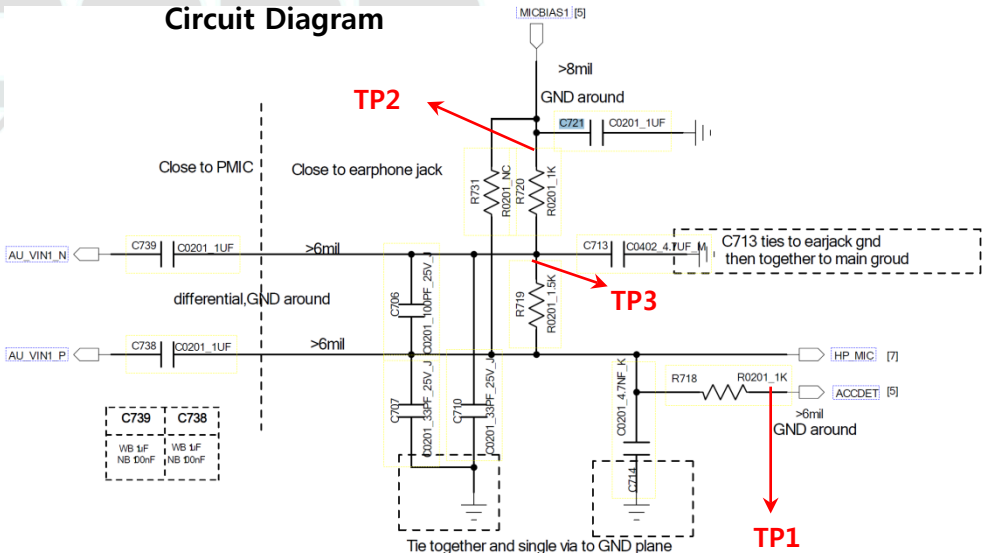

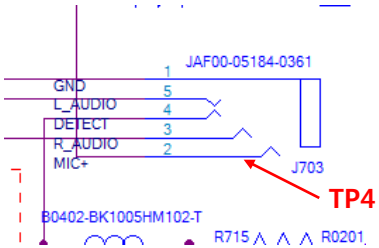

Copyright © 2017 LG Electronics. Inc. All right reserved. Only training and service purposes

3.10 Checking LCD Block

The LCD control signals are generated by MT6737M. Its interface is MIPI having two data lanes and one clock lane.

Checking Flow

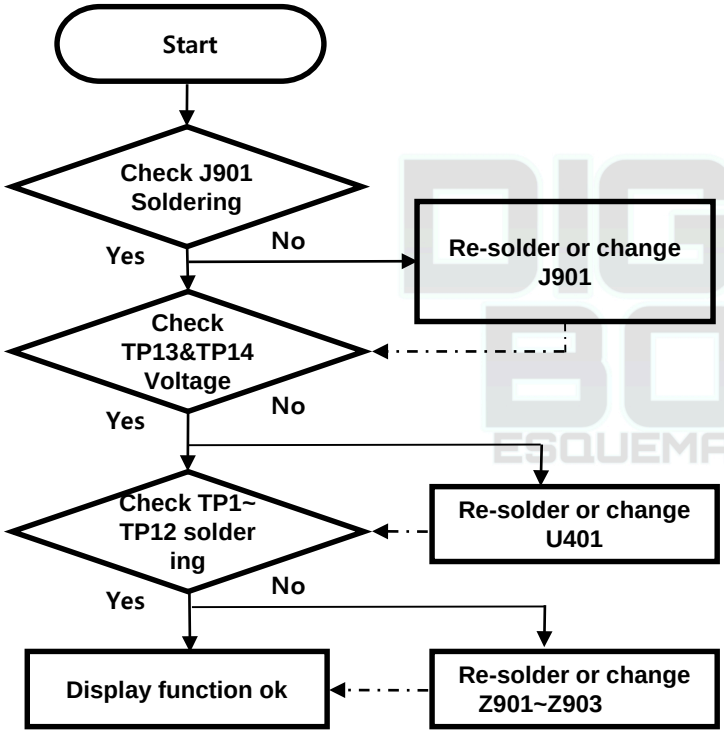

Image

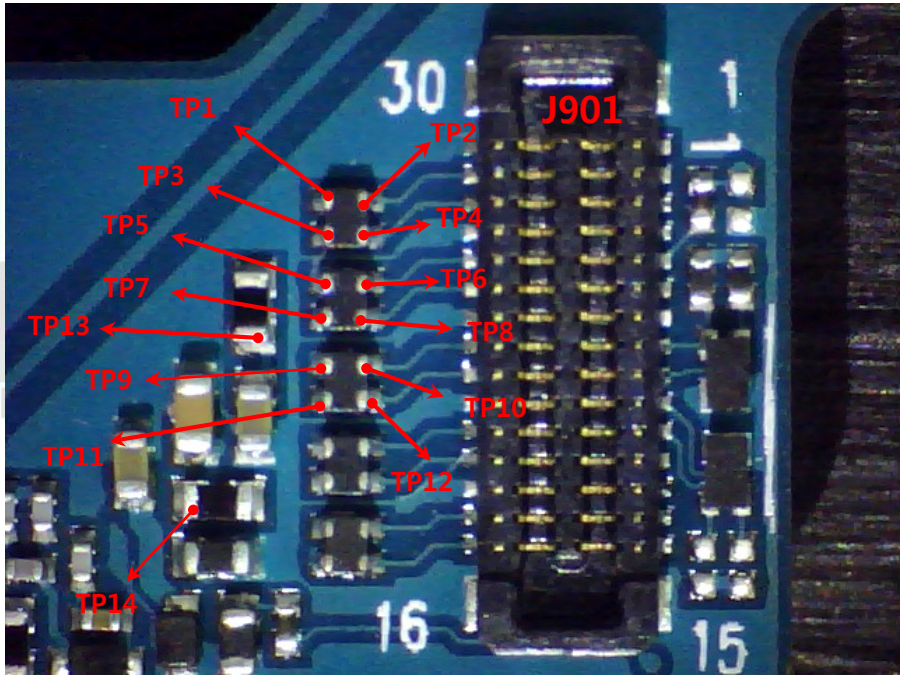

Copyright © 2017 LG Electronics. Inc. All right rese rved. Only training and service purposes

3.10 Checking LCD Block

The LCD control signals are generated by MT6737M. Its interface is MIPI having two data lanes and one clock lane.

Circuit Diagram

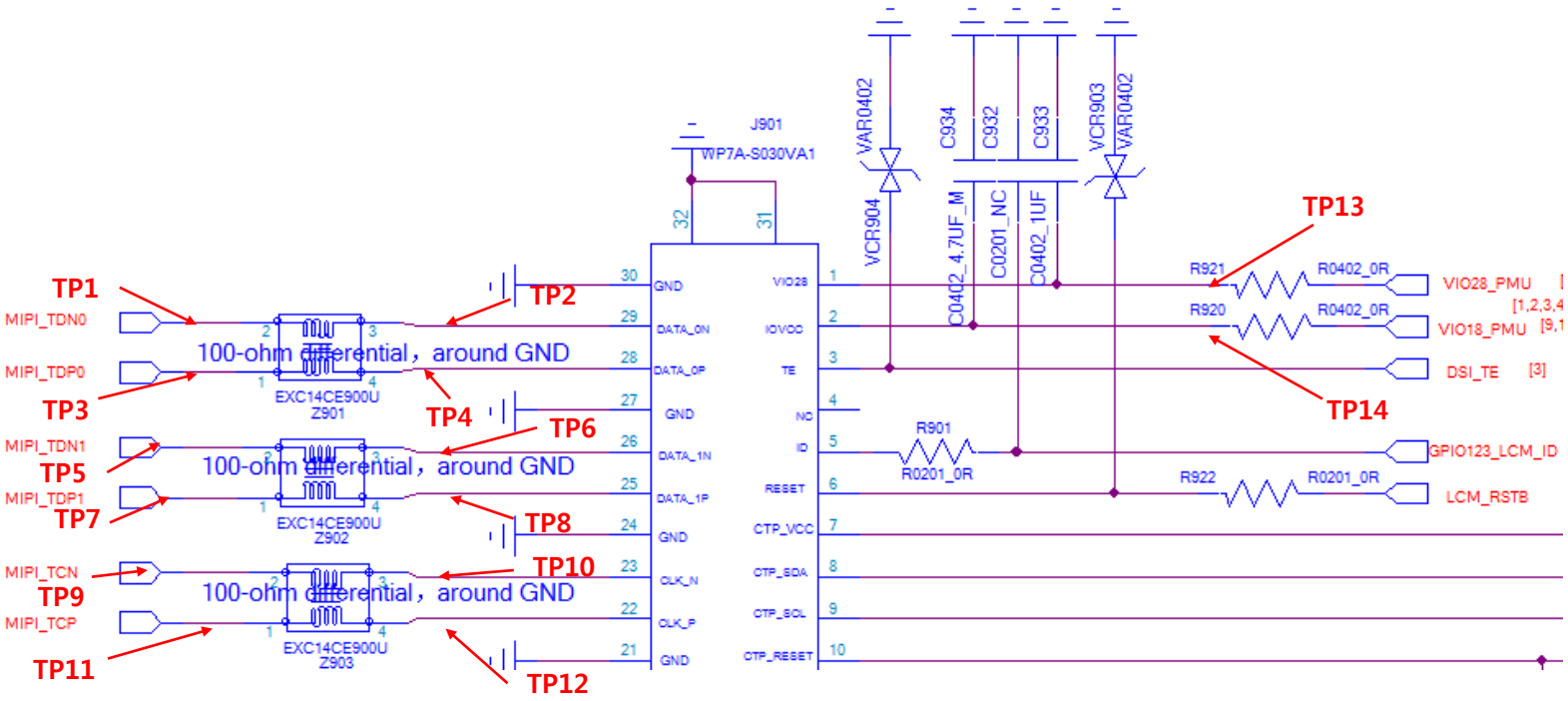

Copyright © 2017 LG Electronics. Inc. All right reserved. Only training and service purposes

3.11 Checking Touch Block

The Touch control signals are generated by MT6737M and MT6328. It is assembled with LCD.

Checking Flow

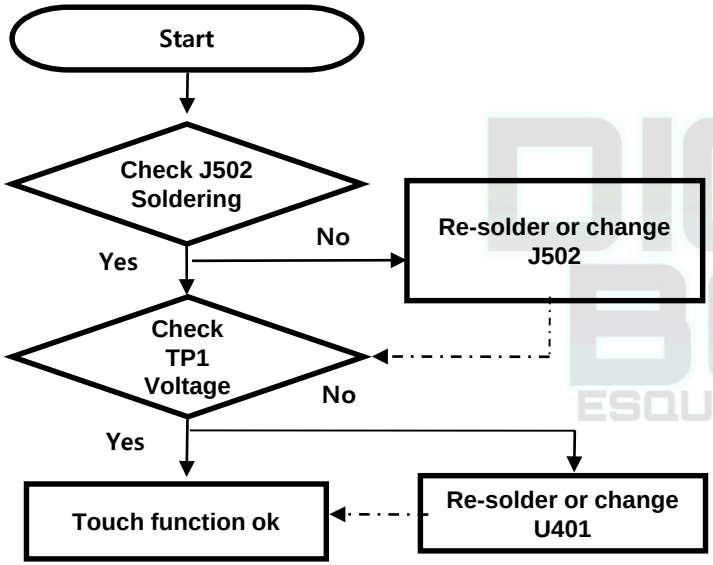

Image

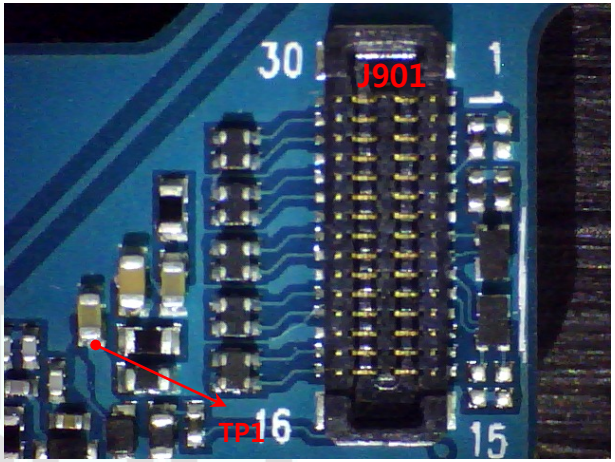

Circuit Diagram

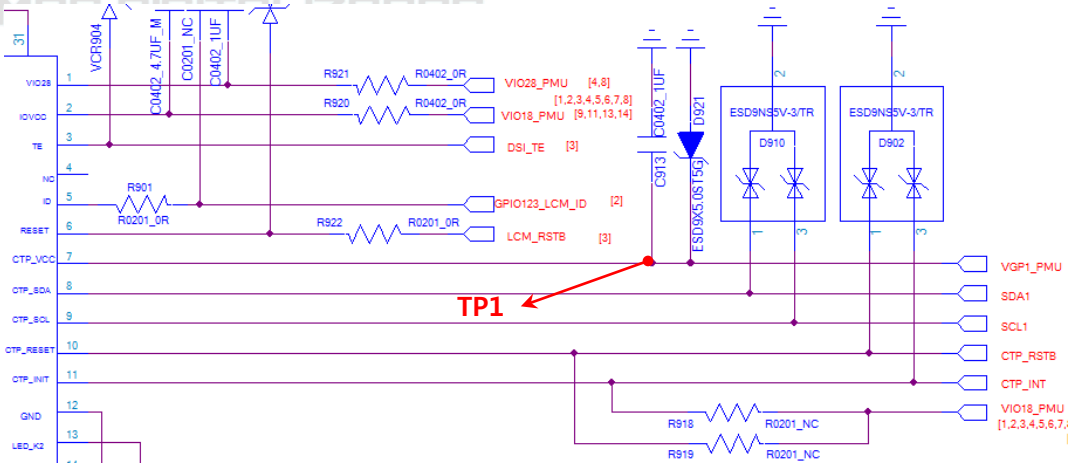

Copyright © 2017 LG Electronics. Inc. All right reserved. Only training and service purposes

3.12 Checking sensor Block

3.12.1 Checking G sensor Block

The G sensor is calibrated by using SW algorithm.

Checking Flow

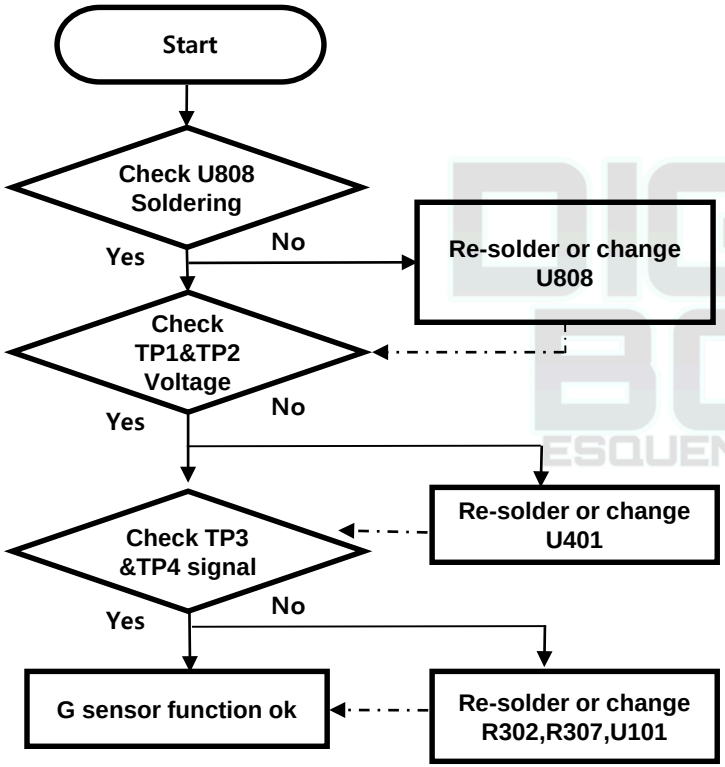

Image

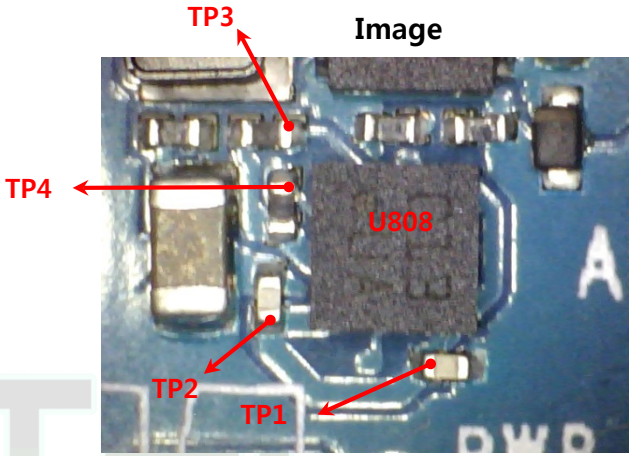

Circuit Diagram

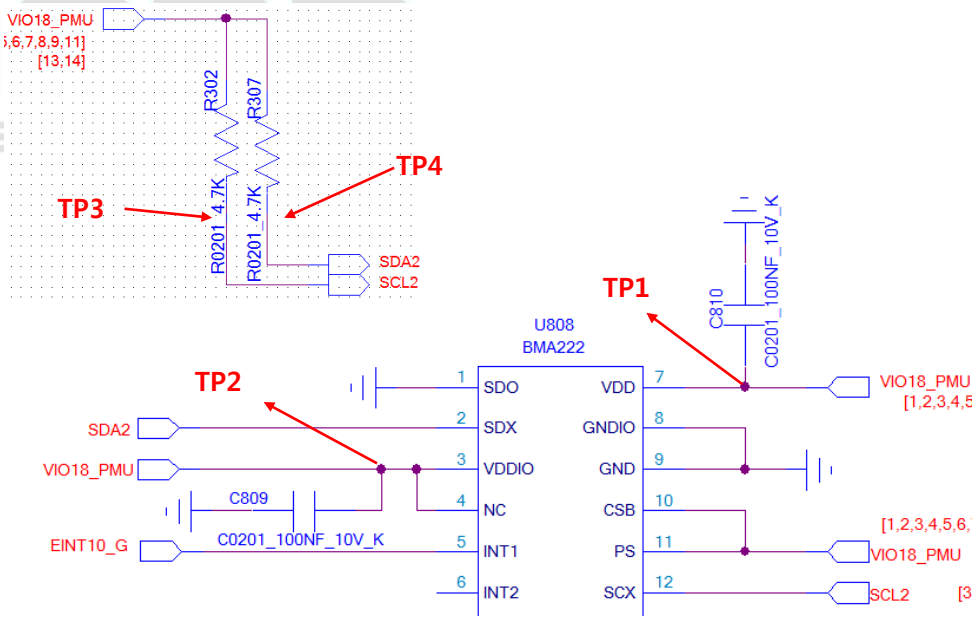

Copyright © 2017 LG Electronics. Inc. All right reserved. Only training and service purposes

3.12 Checking sensor Block

3.12.2 Checking proximity sensor Block

Proximity Sensor is worked as below: Send Key click ☐ Phone number click ☐ Call connected Object moved at the sensor ☐

Control the screen's on/off operation automatically

Checking Flow

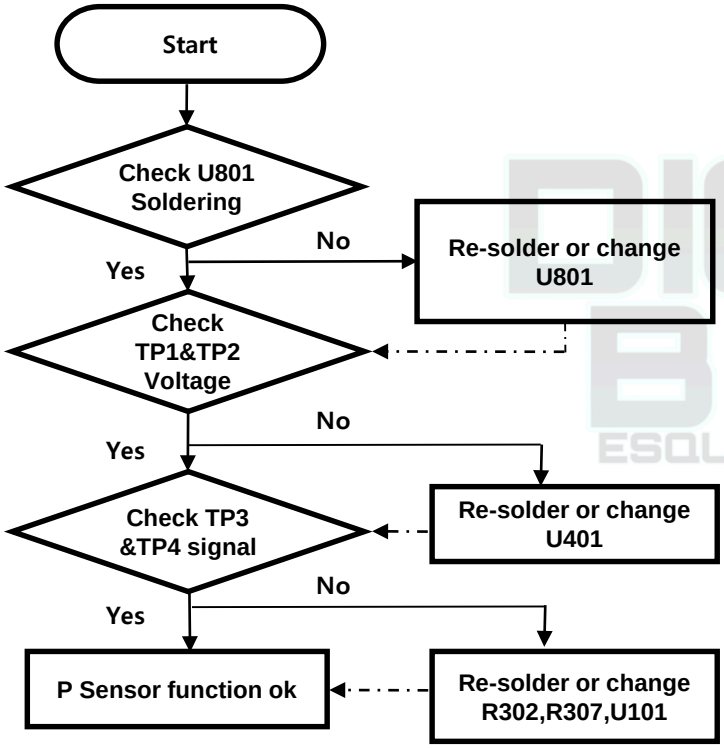

Image

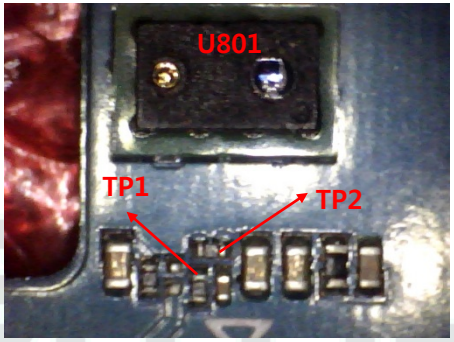

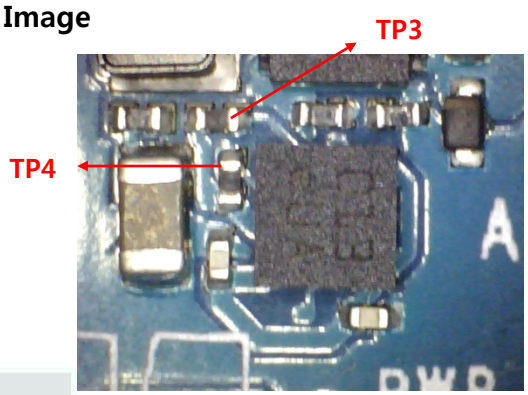

Circuit Diagram

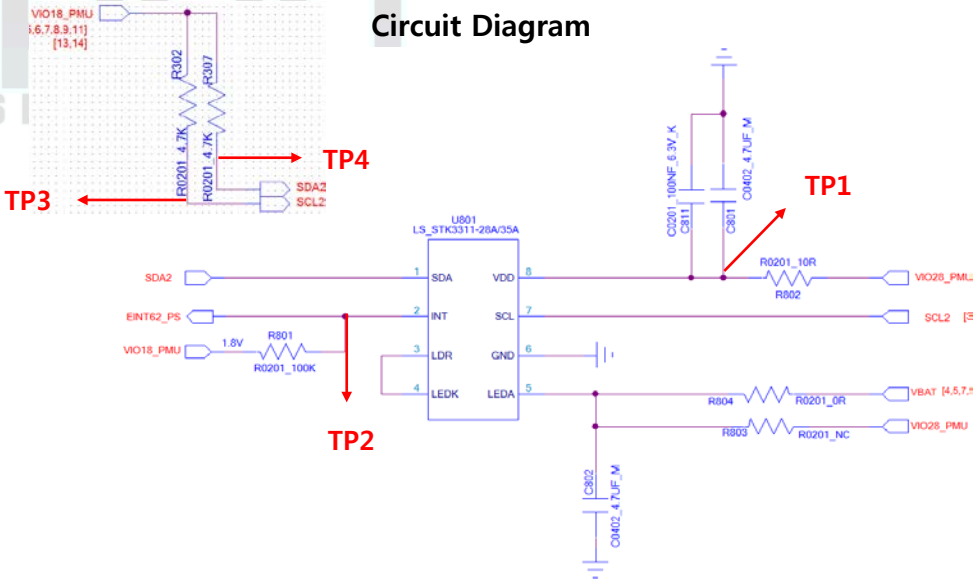

Copyright © 2017 LG Electronics. Inc. All right reserved. Only training and service purposes

3.13 Checking USB Block

I/O connector is used as the USB port.

Checking Flow

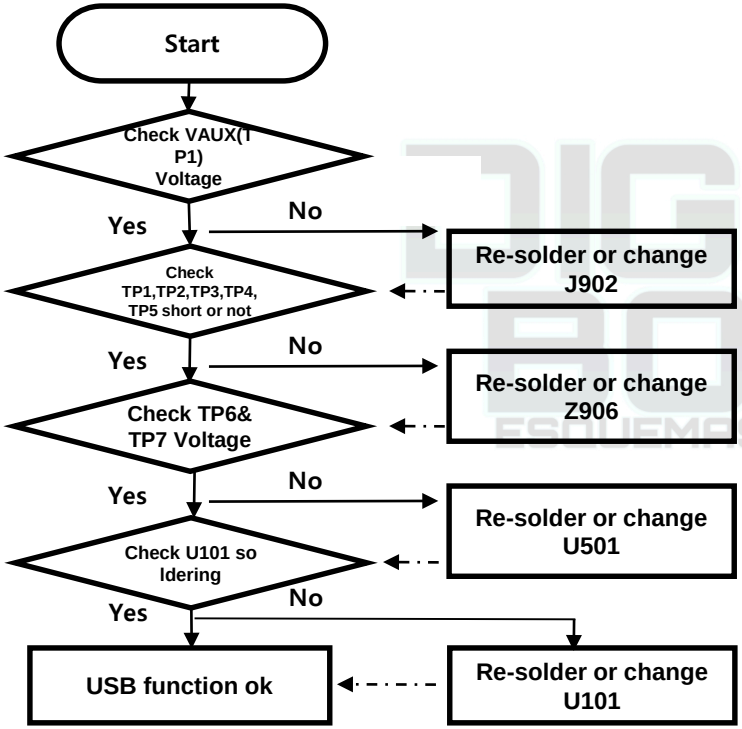

Image

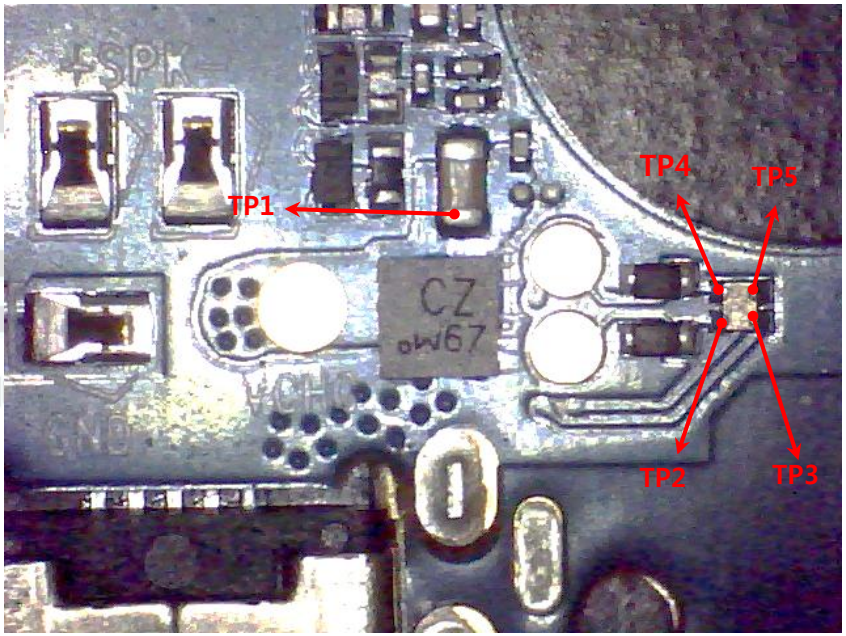

Circuit Diagram
: Next Page

Copyright © 2017 LG Electronics. Inc. All right reserved. Only training and service purposes

3.13 Checking USB Block

I/O connector is used as the USB port.

Circuit Diagram

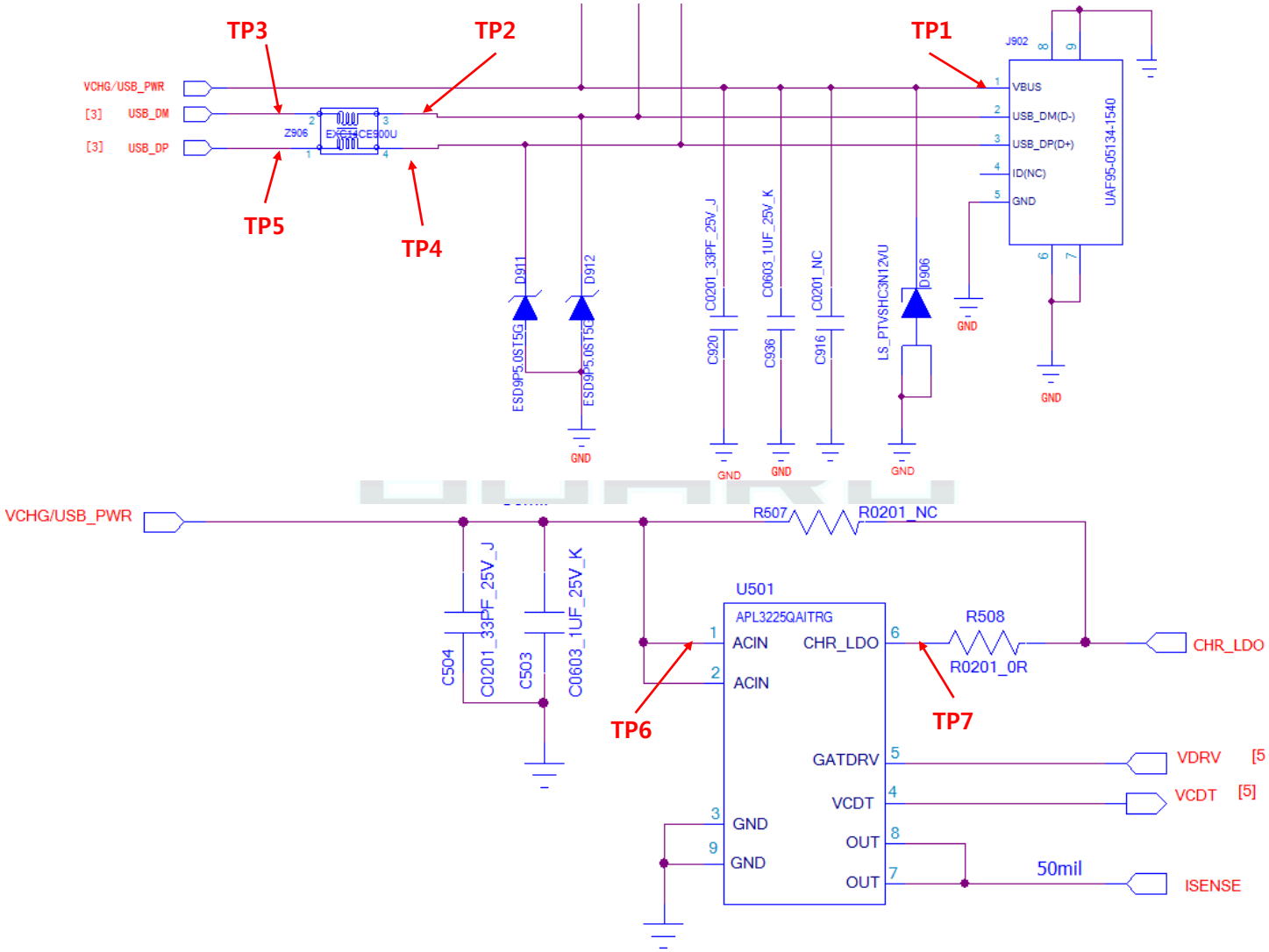

Copyright © 2017 LG Electronics. Inc. All right reserved. Only training and service purposes

3.14 Checking camera Block

3.14.1 Checking Main camera Block

8M FF camera control signals are generated by MT6737M(U101). And powered by PMU(U401).

Checking Flow

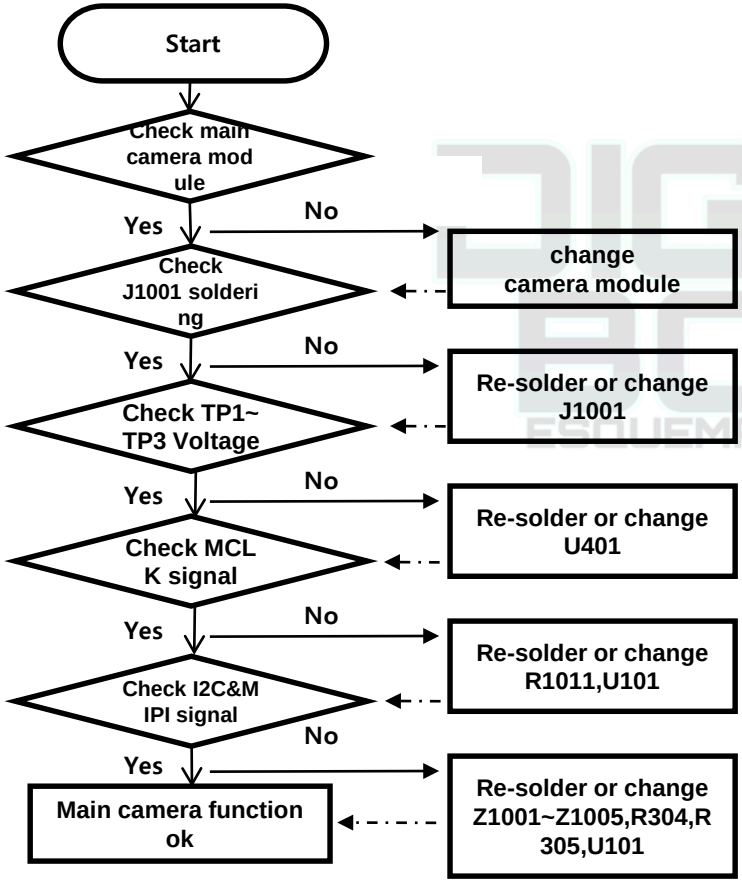

Image

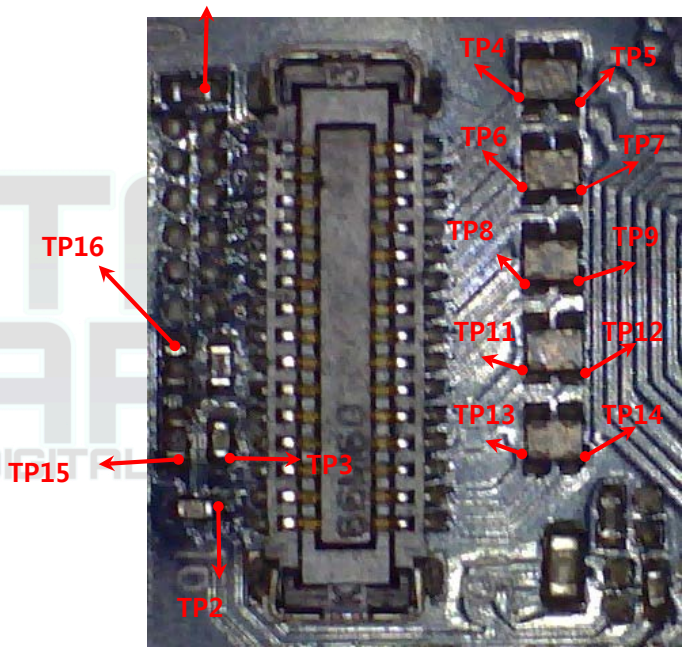

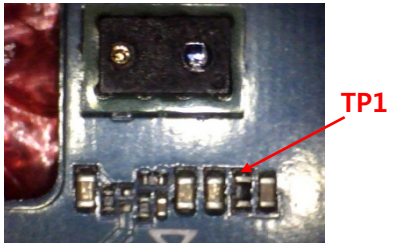

Circuit Diagram : Next Page

Copyright © 2017 LG Electronics. Inc. All right reserved. Only training and service purposes

3.14 Checking camera Block

3.14.1 Checking Main camera Block

8M FF camera control signals are generated by MT6737M(U101). And powered by PMU(U401).

Circuit Diagram

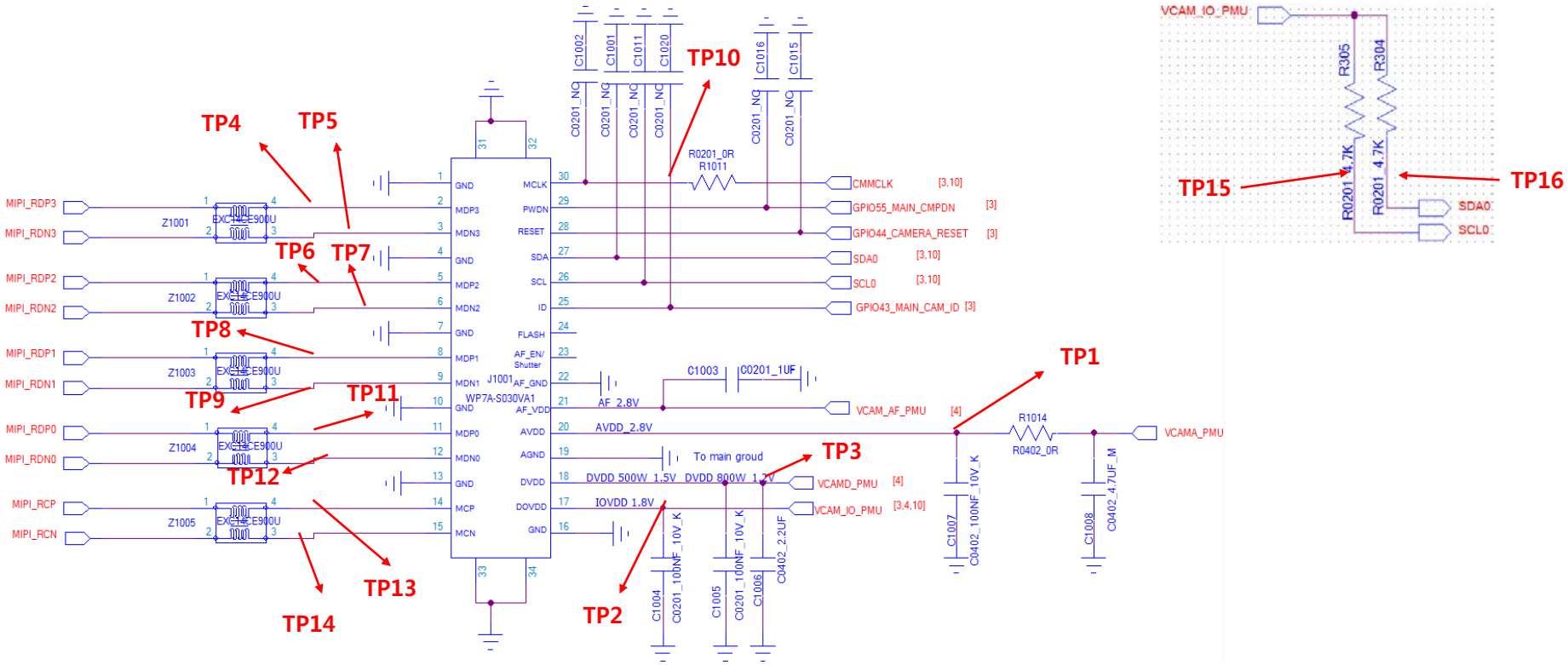

Copyright © 2017 LG Electronics. Inc. All right reserved. Only training and service purposes

3.14 Checking camera Block

3.14.2 Checking sub camera Block

Sub camera control signals are generated by MT6737M(U101). And powered by PMU(U401).

Checking Flow

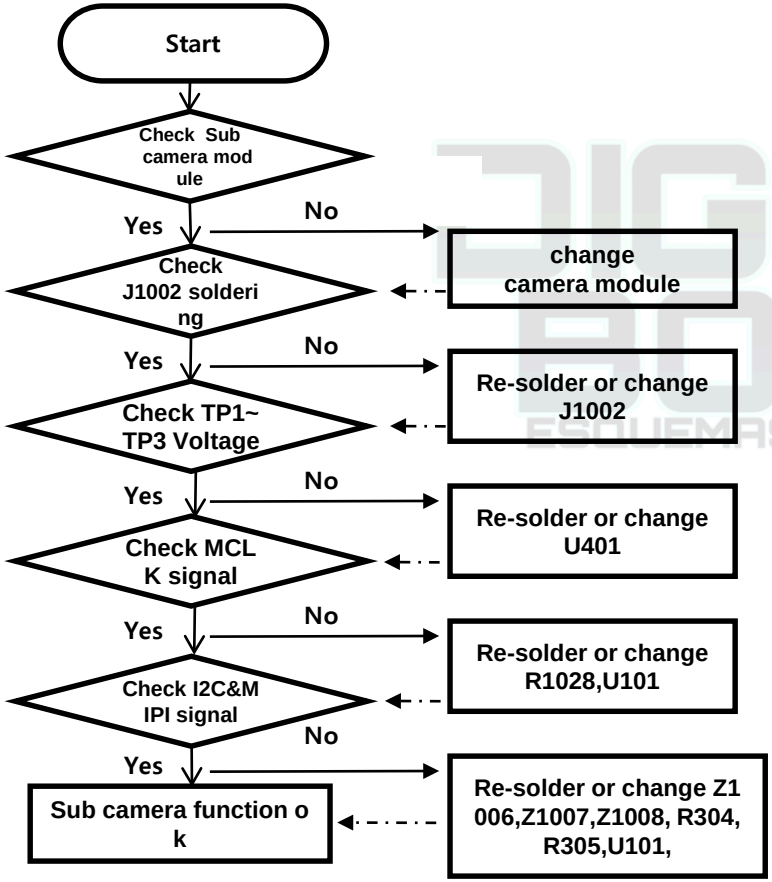

Image

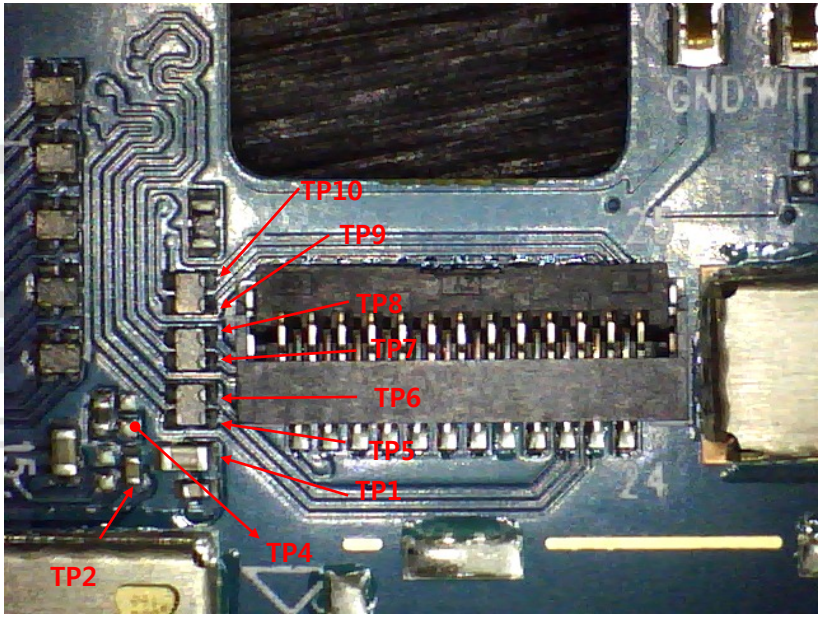

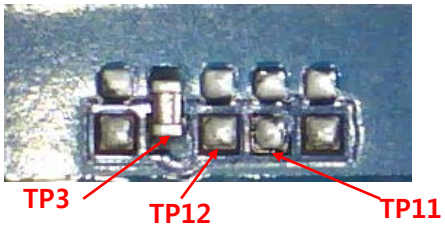

Circuit Diagram : Next Page

Copyright © 2017 LG Electronics. Inc. All right reserved. Only training and service purposes

3.14 Checking camera Block

3.14.2 Checking sub camera Block

Sub camera control signals are generated by MT6737M(U101). And powered by PMU(U401).

Circuit Diagram

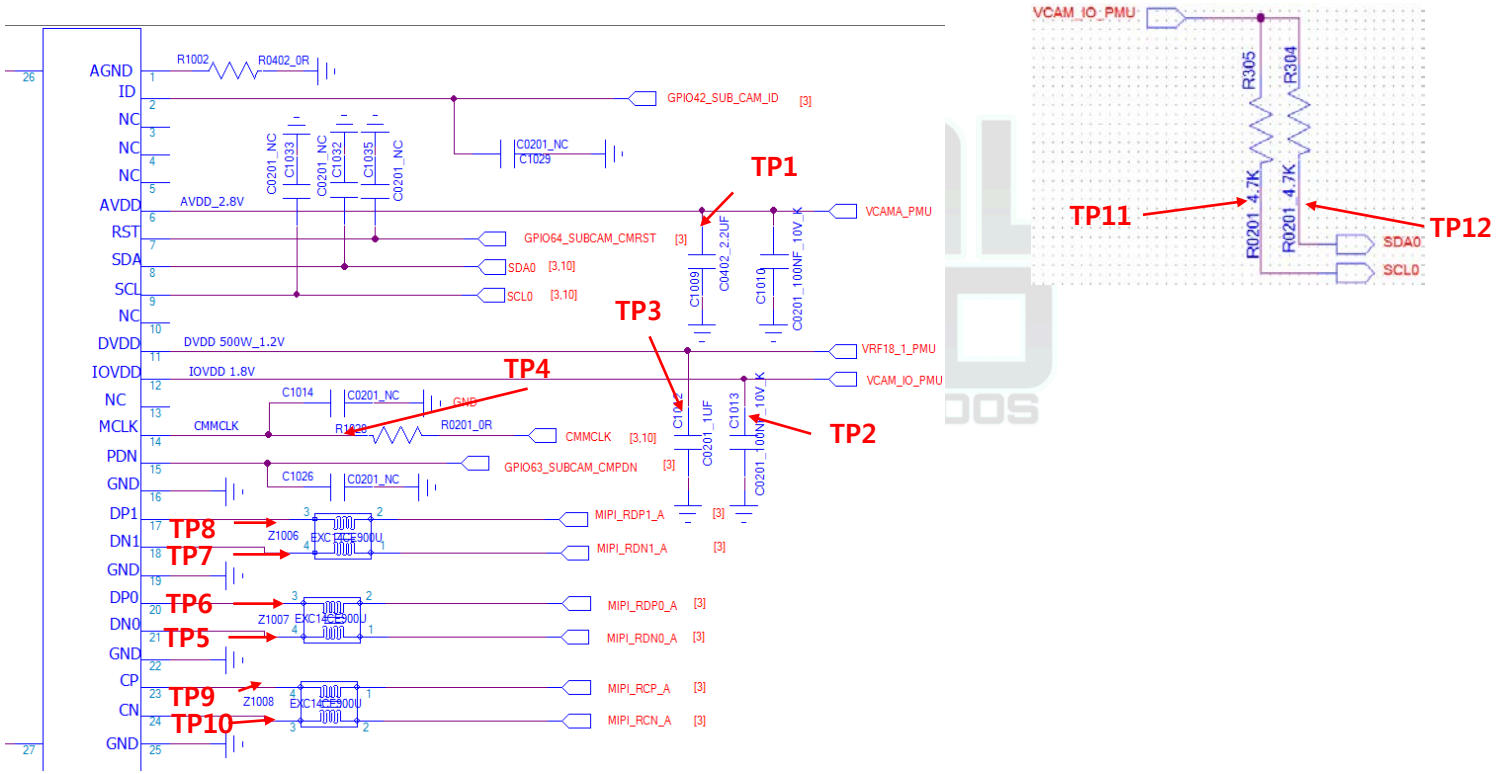

Copyright © 2017 LG Electronics. Inc. All right reserved. Only training and service purposes