SAMSUNG CONFIDENTIAL
THIS DOCUMENT CONTAINS CONFIDENTIAL
PROPRIETARY INFORMATION THAT IS
SAMSUNG ELECTRONICS CO'S PROPERTY.
DO NOT DISCLOSE TO OR DUPLICATE FOR OTHERS
EXCEPT AS AUTHORIZED BY SAMSUNG.

Q6/B MAIN REV0.6A

SM-F9560

EUR
2024.03.28
SMD 2024.05.27

sheet01 : RF (1/2)
sheet02 : RF (2/2)
sheet03 : NFC, MST, MFC
sheet04 : SENSORS
sheet05 : AP_SM8650, UFS
sheet06 : AP_SM8650 POWER/GND, IF PMIC, CHARGER
sheet07 : PM8550, PM8550VS/VE
sheet08 : AUDIO
sheet09 : CAMERA, CAM MCU
sheet10 : UPPER / LOWER/ USB C2C
sheet11 : DIGITIZER
sheet12 : WIFI, GPS, UWB

SAMSUNG CONFIDENTIAL
THIS DOCUMENT CONTAINS CONFIDENTIAL
AND PROPRIETARY INFORMATION OF
SAMSUNG ELECTRONICS CO'S PROPERTY.
DO NOT DISCLOSE TO OR DUPLICATE FOR OTHERS
EXCEPT AS AUTHORIZED BY SAMSUNG.

Conduction

MAIN1 ANT
(LB)

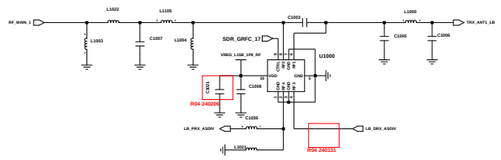

MAIN2 ANT
(MB/HB)

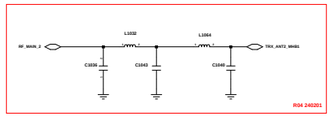

MAIN1 UHB ANT
(N77/78, N79 DRx MIMO)

MAIN4 ANT
(N77/78, N79 DRx)

230824

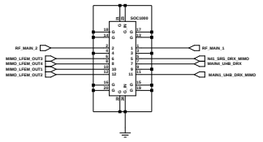

FRC_CONN (MAIN RF)

Place holder for ESD protection

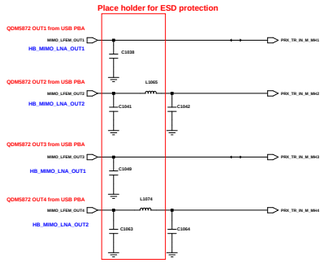

MHB MIMO_LNA OUT

NA/JPN : SMD
EUR/GLB/KOR/CHN: NC(SOC1001 only)
decap/bead SMD

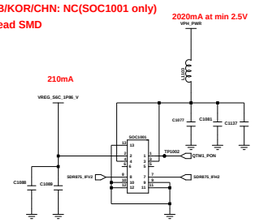

mmW_ANT_CONN (Left)

NA/EUR/GLB/KOR/CHN/JPN: NC(SOC1002 only)
decap SMD

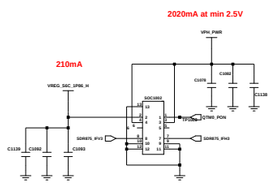

Need to check connector P/N and pin map

mmW_ANT_CONN (Right)

Conduction

LB LPAMiD
(B5/8/12/13/14/17/20/26/28/29/71, G850/900)

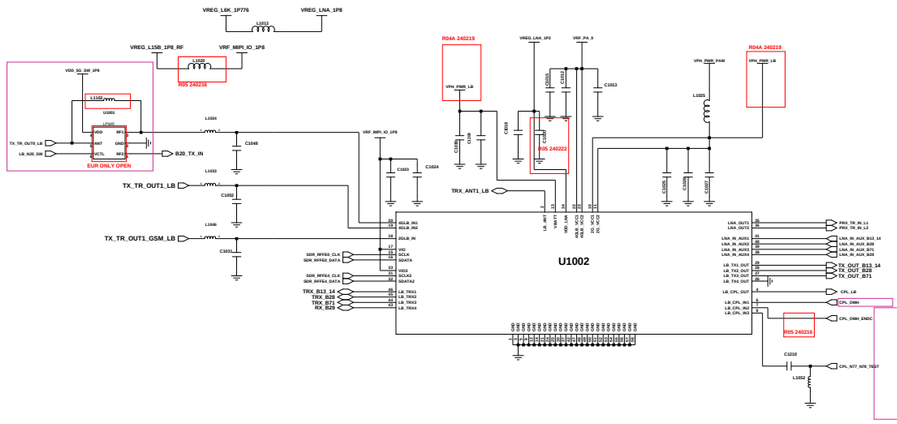

THERMISTER
(QPM6810A)

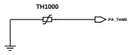

NA : SFX787AHW02
EUR/GLB/KOR : SFX748AHT02
CHN/JPN :QM23013

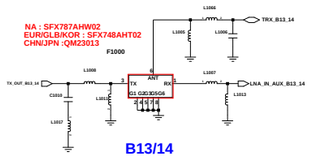

B13/14

NA/EUR/GLB/KOR/CHN/JPN : B1304

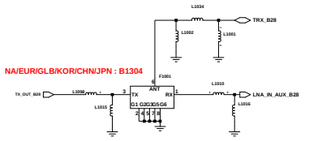

B28

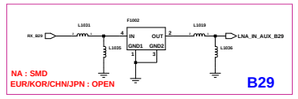

NA : SMD
EUR/KOR/CHN/JPN : OPEN

B29

NA: SMD
EUR/GLB/KOR/CHN/JPN : OPEN

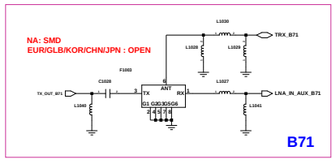

B71

230901

OMH LPAMID
(B1/2/3/4/7/25/30/34/38/39/40/41/66, G1800/1900)

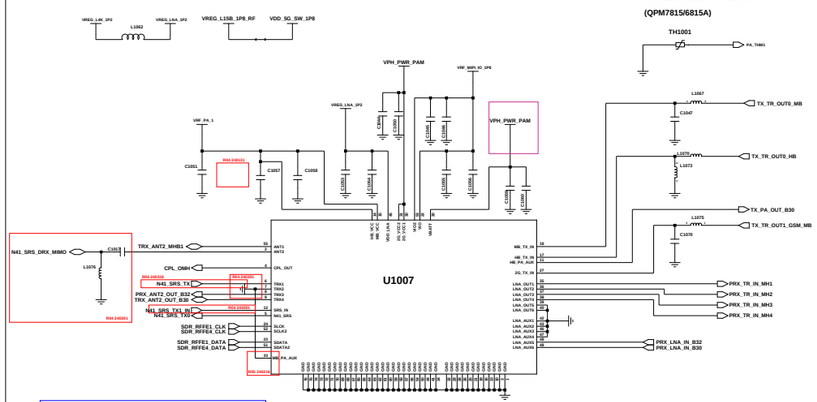

THERMISTER
(QPM7815/6815A)

230824

EUR/GLB/KOR/CHN/JPN : OPEN
NA : SMD

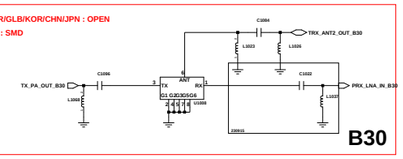

B30

NA/GLB/KOR/CHN/JPN : OPEN
EUR : SMD

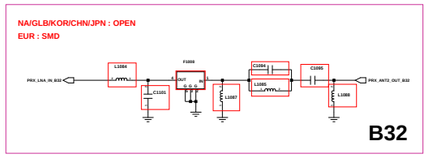

B32

B21 SMD option

NA/EUR/GLB/KOR/CHN : OPEN

APT Modulator(QM81050)

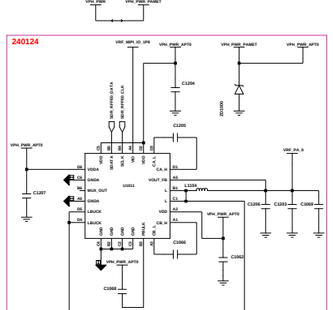

APT Modulator(QET6105#1)

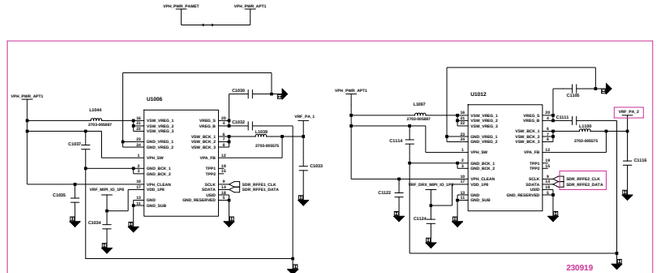

APT Modulator(QET6105#2)

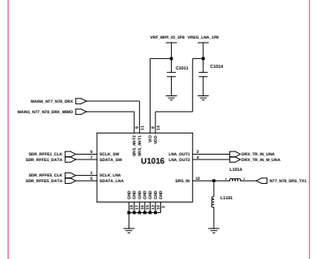

n77/78 LFEM

NA/EUR/KOR OPEN
CHN/JPN SMD

CHN/JPN 100NF

CHN/JPN 1NF

n79 LFEM

230824

EU : SMD
NA/KOR/CHN/JPN : OPEN

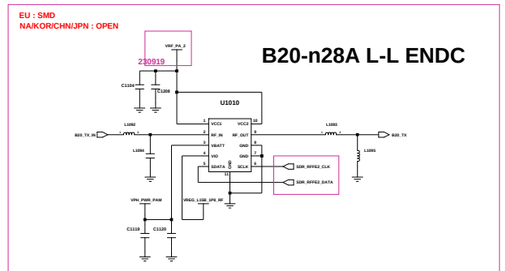

B20-n28A L-L ENDC

Engineer:	SAMSUNG ELECTRONICS
Manager:	
Drawn by:	
Date Code:	TITLE:
DOC CTRL Code:	RF (1/2)
MFG ENGR Code:	
QA Code:	REV: / Drawing Number: / Page:

Changed by: / Date Changed: / Time Changed:

SAMSUNG CONFIDENTIAL
THIS DOCUMENT CONTAINS CONFIDENTIAL
AND PROPRIETARY INFORMATION OF
SAMSUNG ELECTRONICS CO'S PROPERTY.
DO NOT DISCLOSE TO OR DUPLICATE FOR OTHERS
EXCEPT AS AUTHORIZED BY SAMSUNG.

Conduction TRANSCEIVER(SDR875)

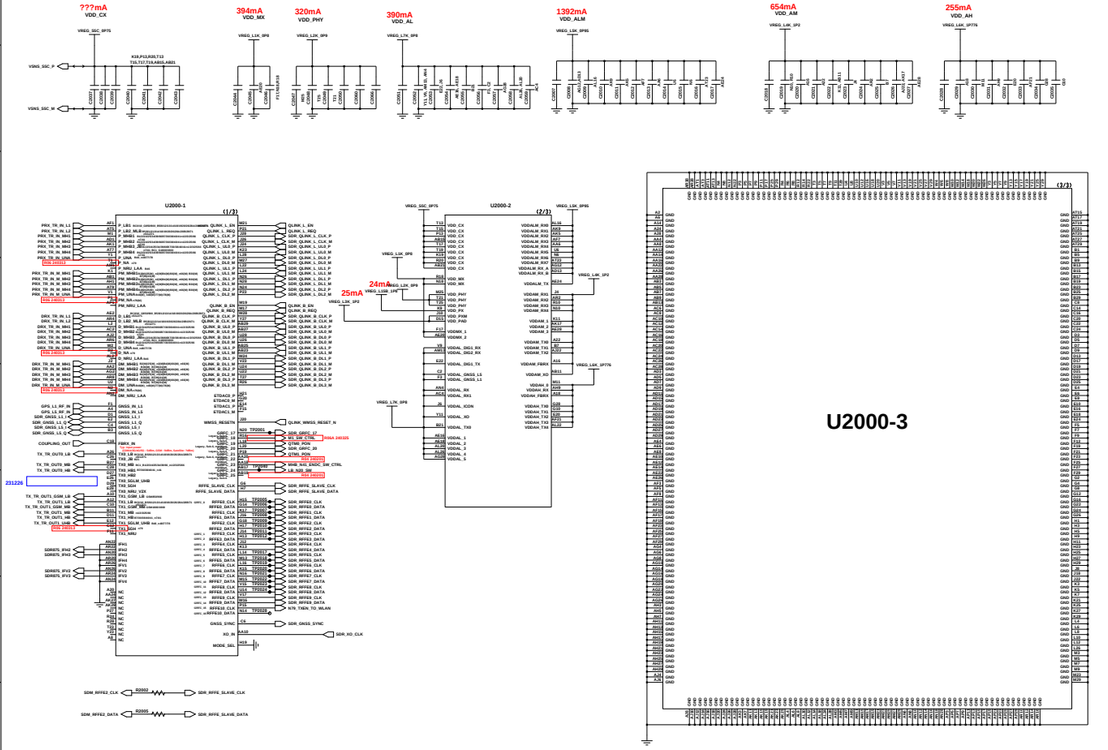

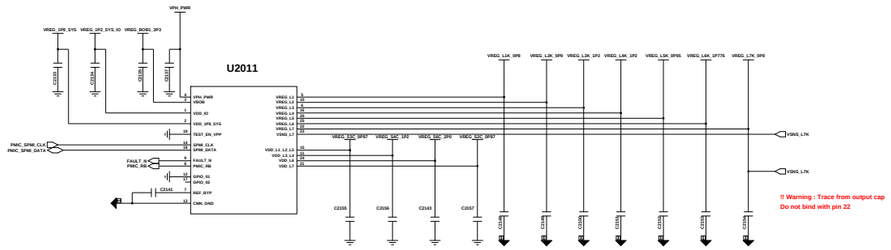

RF PMIC PMR735D

DRX_ANT

SUB ANT1
(IB)

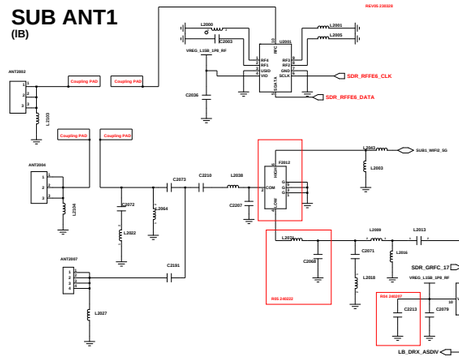

Radiation

SUB ANT2
(mB/hB, N41/N77/78/N79,L1)

SUB3 ANT
(n77/78/79, L5, UWB, WIFI2_2.4G)

Conduction

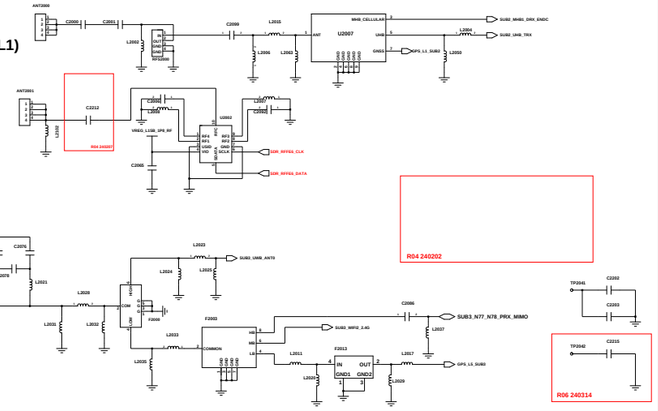

DRX_LB
(B5/8/12/13/14/17/18/19/20/26/28/29/71_G850/900)

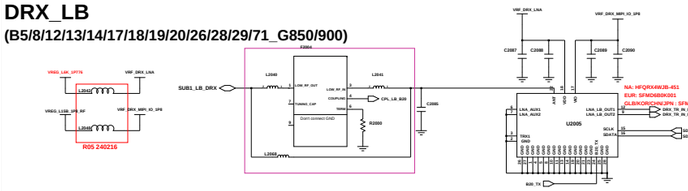

SUB4 ANT (MHB DRx MIMO, WiFi1)

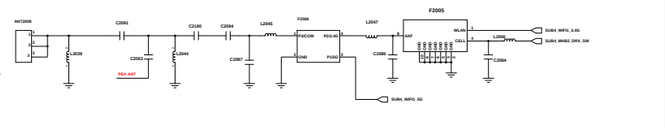

DRX_MHB_1 (ENDC)
(B1/2/3/4/7/25/30/39/41/66_DCS/PCS)

DRX_MHB_2
(B1/2/3/4/7/25/30/39/41/66)

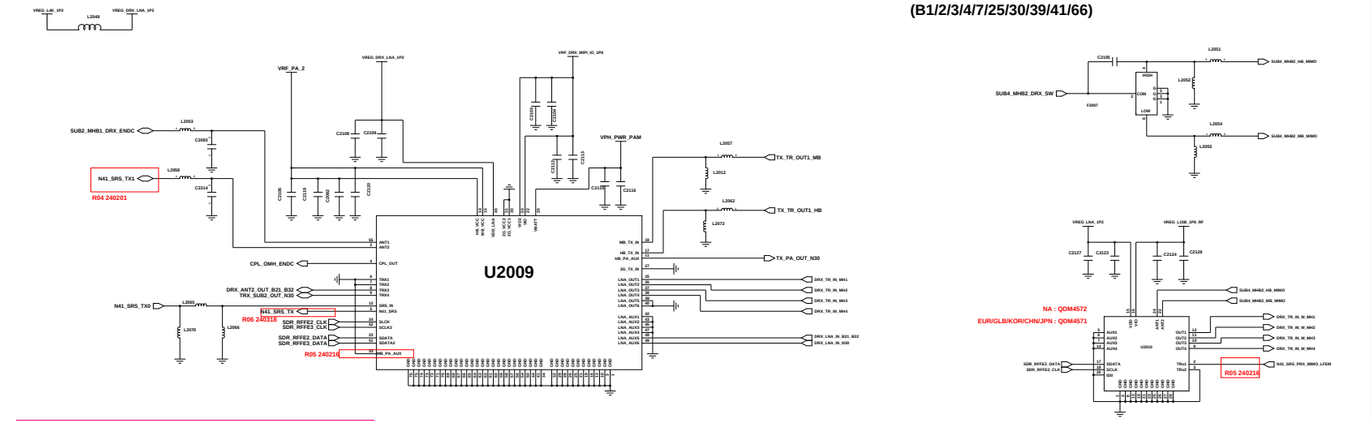

N41 SRS

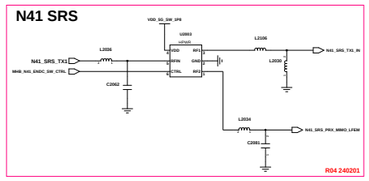

N30

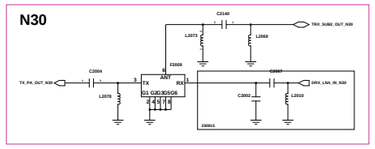

B21/B32/N75

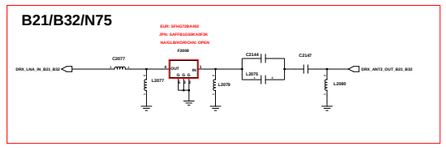

UHB LPAMID
(B42/48, N77/78/79)

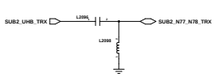

UHB
(B42/48, n77/78)

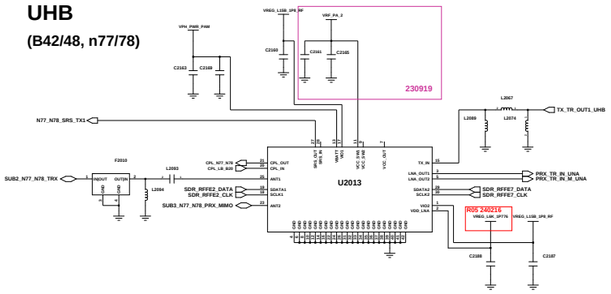

UHB
(n79)

Engineer: SEC	SAMSUNG ELECTRONICS
Design by:	
PMD CTRL:	TITLE: RF (2/3)
DOC CTRL CHK:	SIZE: 24 x 36 A
MFG ENGR CHK:	
QA CHK:	REV: Drawing Number: Page: 19

Changed by: Date Changed: Time Changed:

SAMSUNG CONFIDENTIAL
THIS DOCUMENT CONTAINS CONFIDENTIAL
PROPRIETARY INFORMATION THAT IS
SAMSUNG ELECTRONICS CO'S PROPERTY.
DO NOT DISCLOSE TO OR DUPLICATE FOR OTHERS
EXCEPT AS AUTHORIZED BY SAMSUNG.

Connectivity

SKU	SIM	NFC IC	Maker P/N	#1(0)	#2(20K)	#3(220nF)	L/S #2 pSIM
NA/CAN	Nano + eSIM	SN300UBV1	SN300UUK/B52LH0	SHORT	SMD	SMD	OPEN
KOR	Nano + eSIM	SN300UV1	SN300UUK/B529S0	SHORT	SMD	SMD	OPEN
EUR/Global	2 Nano + eSIM	SN300UV1	SN300UUK/B529S0	SHORT	SMD	SMD	SMD
CHN	2 Nano	SN300TV1	SN300TUK/B52C20	OPEN	OPEN	OPEN	SMD
JPN	Nano + eSIM	SN300PV1	SN300PUK/B52H80	SHORT	SMD	SMD	OPEN

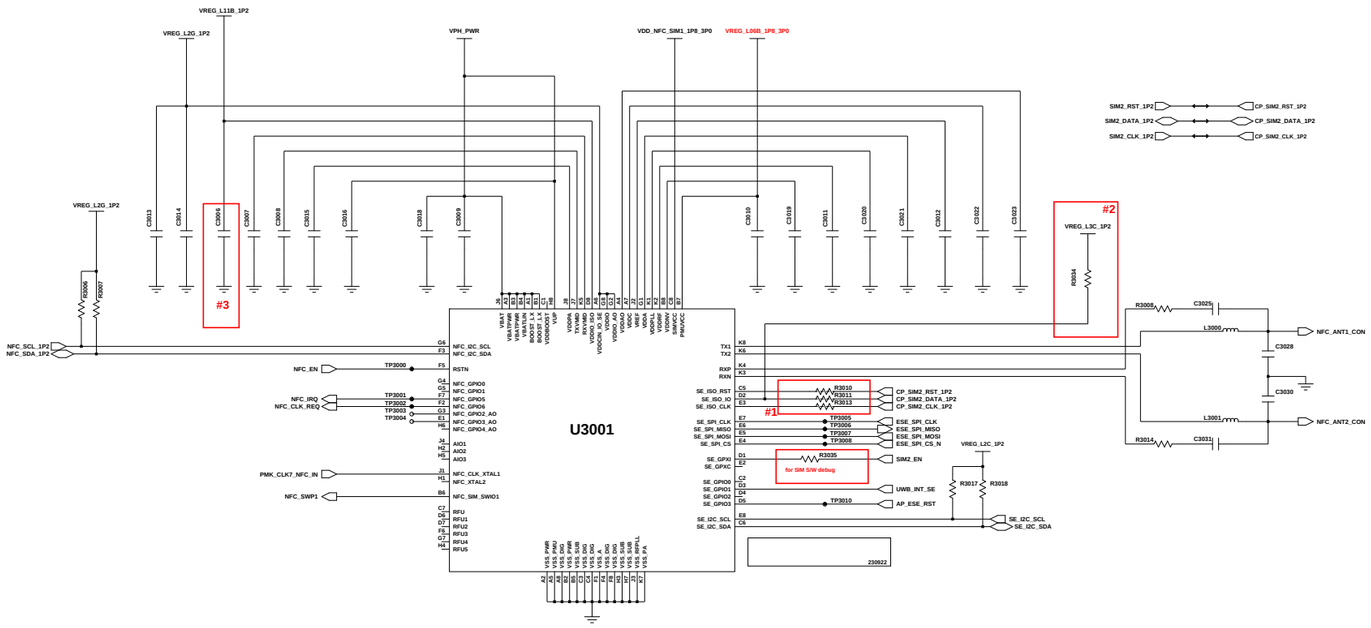

NFC + eSIM Combo

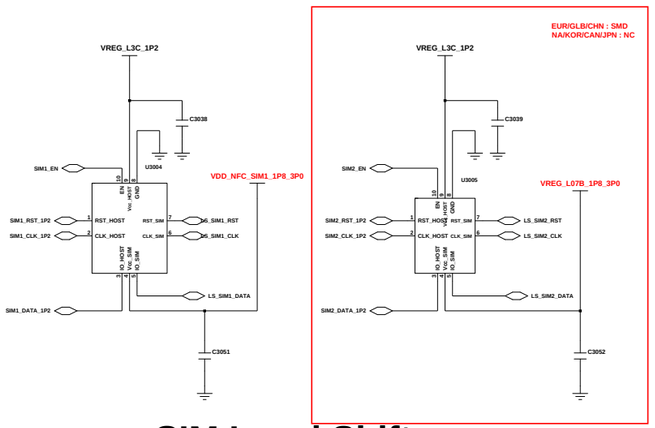

SIM Level Shifter

Power

WPC_MST_NFC_CONN

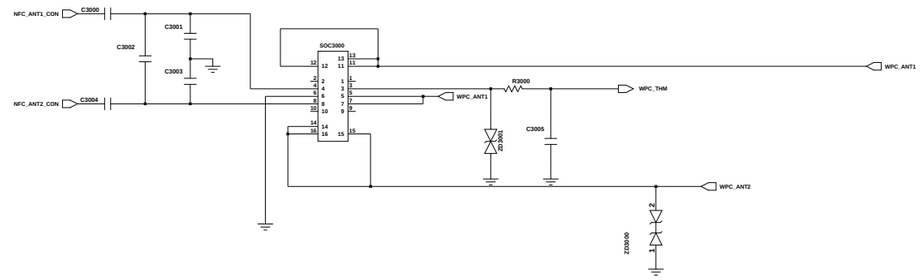

MFC TX MODE

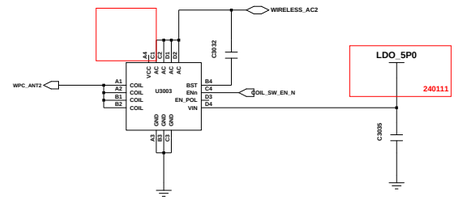

MST Switch

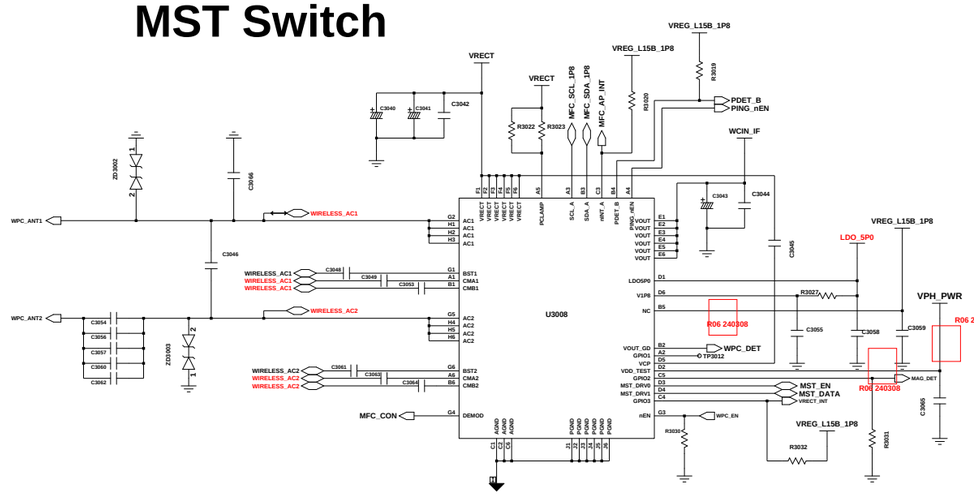

MFC IC

Engineer	SEC
Drawn by:	SEC
R&D CHK:	
DOC CTRL CHK:	
MFG ENGR CHK:	
QA CHK:	

TITLE: Size:

Drawing Number

Changed by: | Date Changed: | Time Changed:

SAMSUNG CONFIDENTIAL
THIS DOCUMENT CONTAINS CONFIDENTIAL
PROPRIETARY INFORMATION THAT IS
SAMSUNG ELECTRONICS CO'S PROPERTY.
DO NOT DISCLOSE TO OR DUPLICATE FOR OTHERS
EXCEPT AS AUTHORIZED BY SAMSUNG.

System

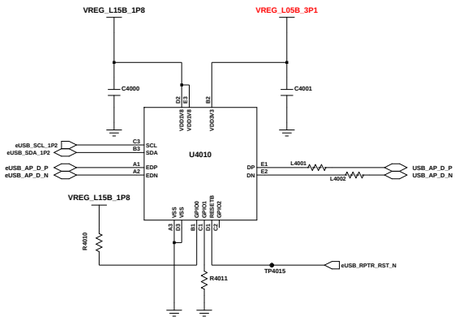

eUSB REPEATER

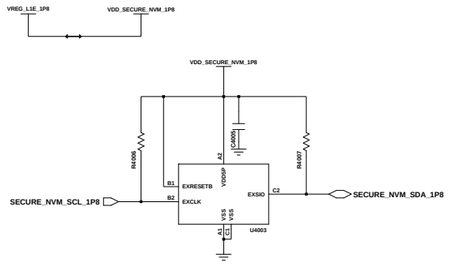

SECURE NVM

SENSORS

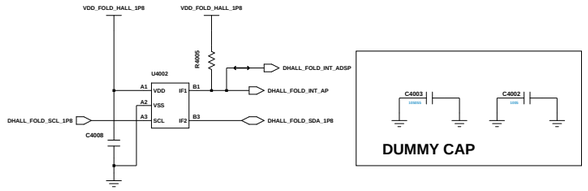

SMART HALL IC (FOLD)

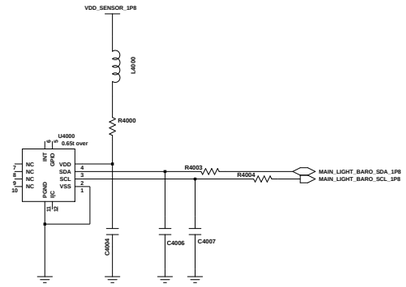

Ambient Light Sensor

Design

SHIELDCAN

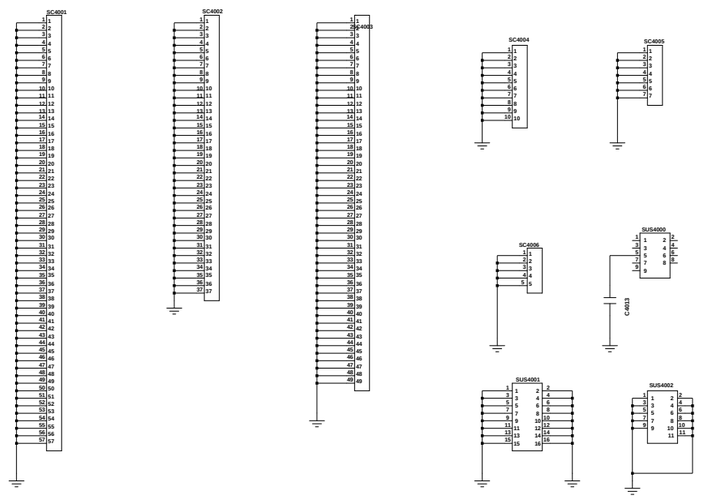

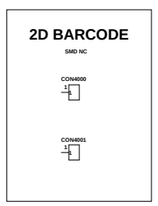

Memory type

256GB TP4008

512GB TP4009

1TB TP4010

Model type

KOR(N) CHN (0) NA (U/W) TP4011 TP4016

JPN (D) EUR (B) TP4012 TP4017

GLB (E) TP4013 TP4018

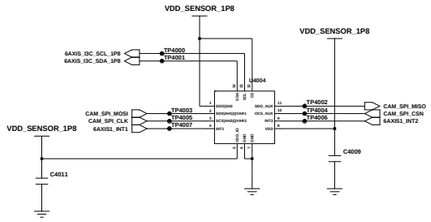

6 Axis SENSOR (GYRO,ACCEL)

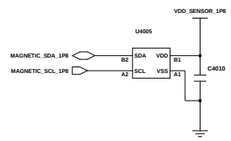

Magnetic SENSOR

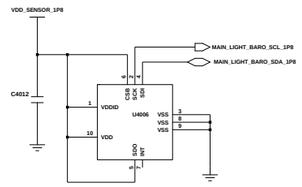

Barometer Sensor

Engineer	SEC		
Drawn by:	SEC		
R&D CHK:		TITLE:	Size:
DOC CTRL CHK:			
MFG ENGR CHK:			
QA CHK:		Drawing Number	

Changed by: | Date Changed: | Time Changed:

SAMSUNG CONFIDENTIAL
THIS DOCUMENT CONTAINS CONFIDENTIAL
AND PROPRIETARY INFORMATION OF
SAMSUNG ELECTRONICS CO'S PROPERTY.
DO NOT DISCLOSE TO OR DUPLICATE FOR OTHERS
EXCEPT AS AUTHORIZED BY SAMSUNG.

SM8650 System

(POWER decap, GND)

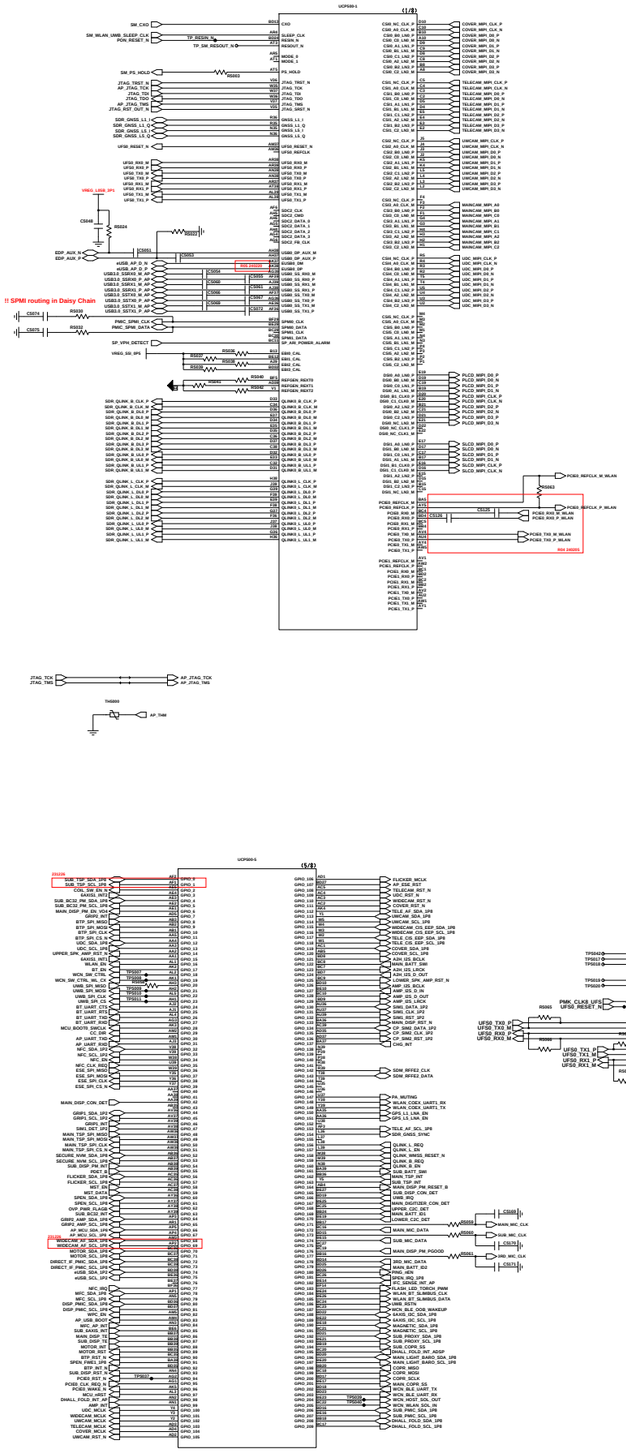

I2C PULL UP

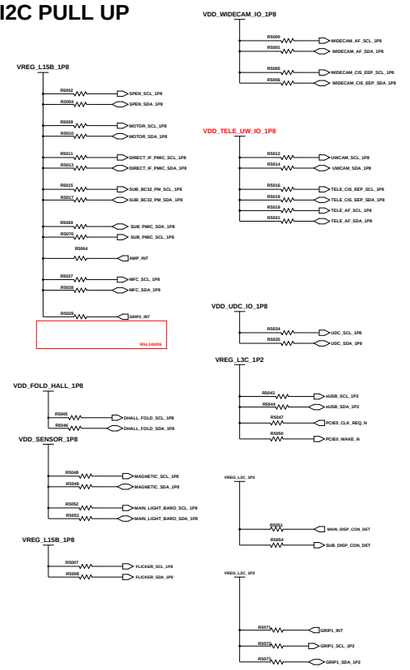

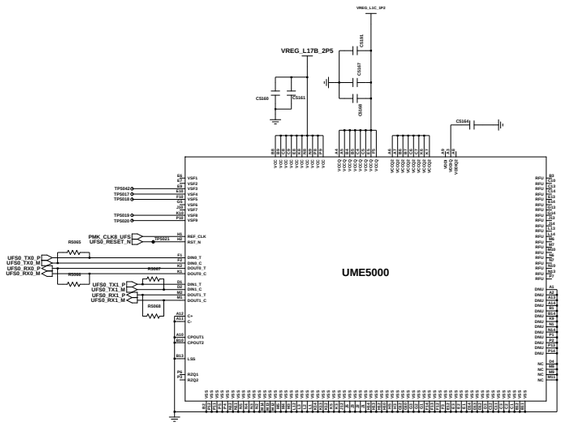

UFS4.0 256GB

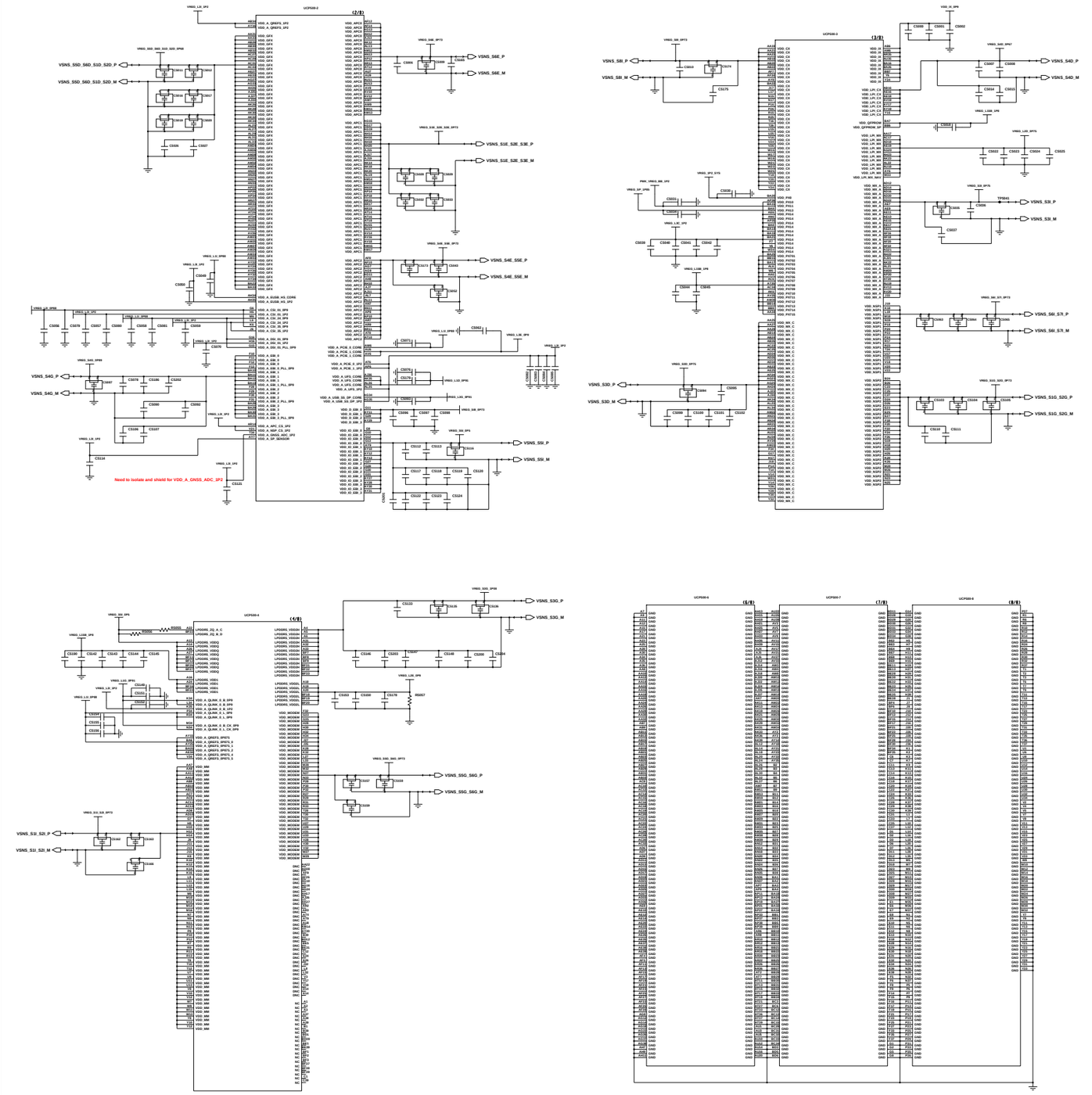

AP JTAG CONNECTOR

(3711-007173 / AXE612124)

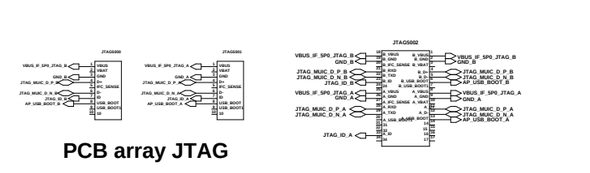

PCB array JTAG

Engineer: SEC	SAMSUNG ELECTRONICS		
Screen by: SEC			
PMIC CTRL Chk:	TITLE: AP		Size: 24.1 M A
DDC CTRL Chk:			
MFG ENGR Chk:		REV:	Drawing Number: Page: 6

Changed by: by Lilly | Date Changed: Tuesday, January 18, 2022 | Time Changed: 12:00:00 am | Qa Chk:

SAMSUNG CONFIDENTIAL
THIS DOCUMENT CONTAINS CONFIDENTIAL PROPRIETARY INFORMATION THAT IS SAMSUNG ELECTRONICS CO'S PROPERTY. DO NOT DISCLOSE TO OR DUPLICATE FOR OTHERS EXCEPT AS AUTHORIZED BY SAMSUNG.

Charger block

Power

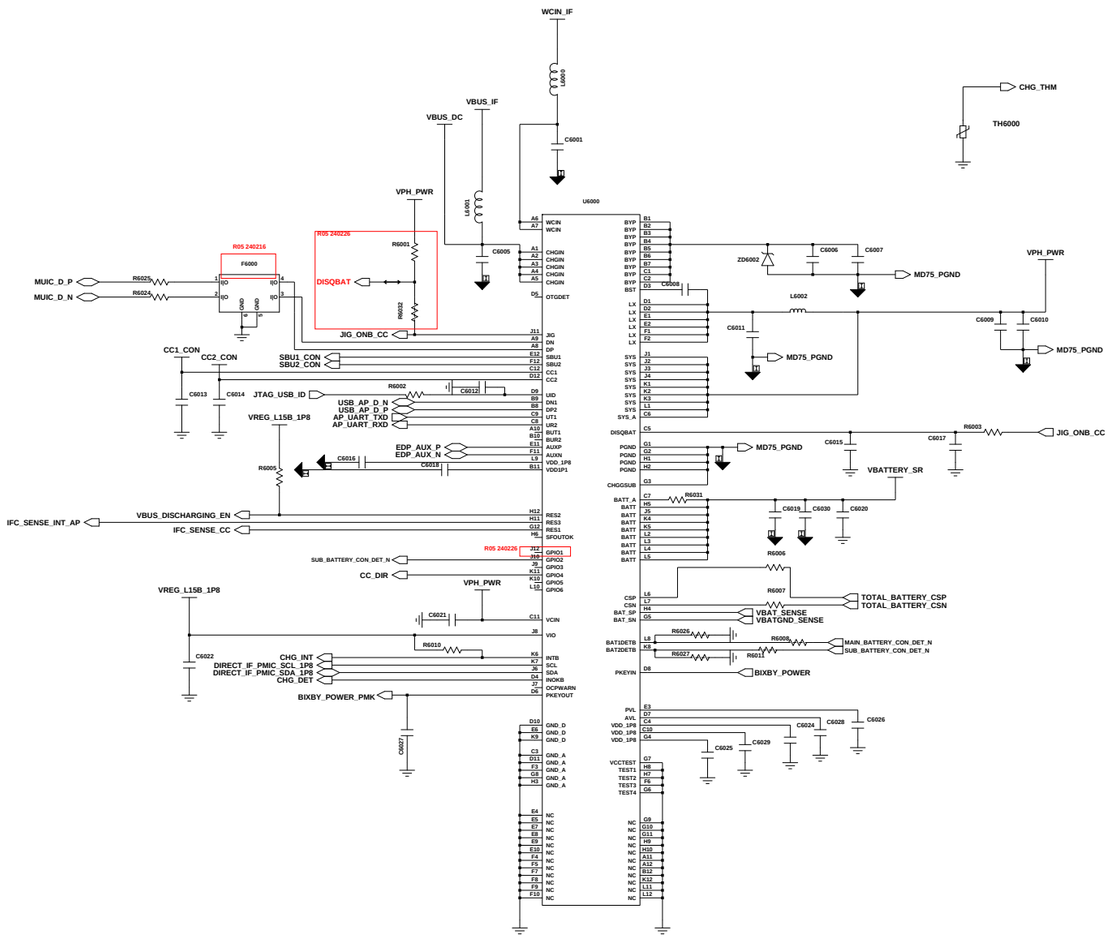

IFPMIC (MD75)

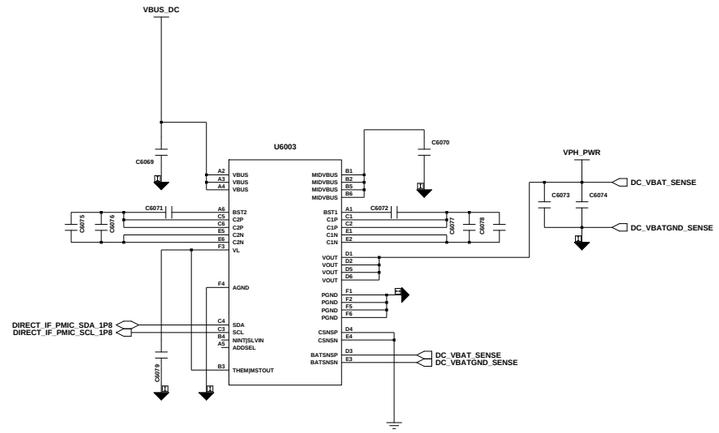

Direct Charging

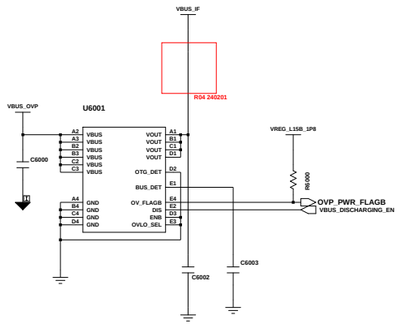

OVP

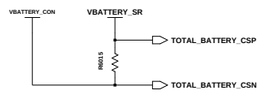

MAIN BATTERY BC32

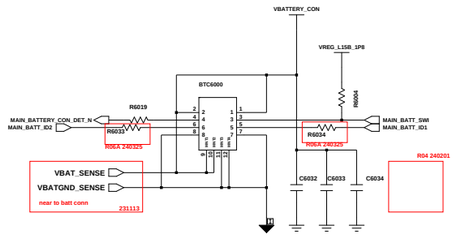

MAIN BATTERY CON

Engineer: SEC	SAMSUNG ELECTRONICS		
Drawn by: SEC			
R&D CHK:	TITLE: IF PMIC	Size: 16 1 12 A	
DOC CTRL CHK:			
MFG ENGR CHK:			
Changed by: hervyll.kang	Date Changed: Monday, April 19, 2021	Time Changed: 2:01:32 pm	QA CHK:
REV	Drawing Number:	Page: 1	

SAMSUNG CONFIDENTIAL
THIS DOCUMENT CONTAINS CONFIDENTIAL
AND PROPRIETARY INFORMATION OF
SAMSUNG ELECTRONICS CO'S PROPERTY.
DO NOT DISCLOSE TO OR DUPLICATE FOR OTHERS
EXCEPT AS AUTHORIZED BY SAMSUNG.

PM8550VS, PM8550VE

!! CAUTION !!

Place Cin 10uF Bulk Caps at corner of PM8550VS and PM8550VE as close as possible

- **PM8550VS : VDD_S1, S3, S4, S6**
- **PM8550VE : VDD_S1, S4, S5, S8**

System Power

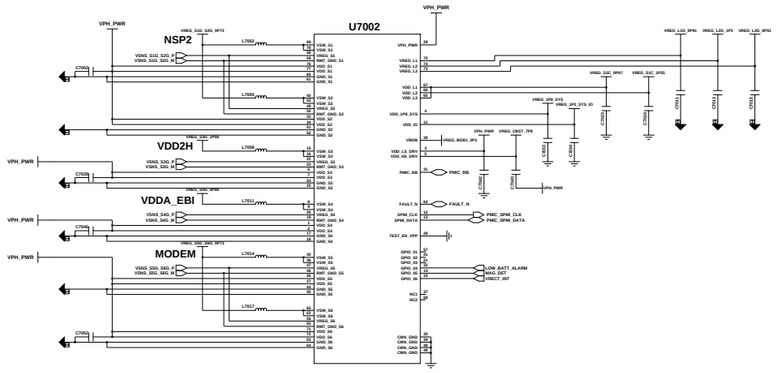

PM8550VS_G

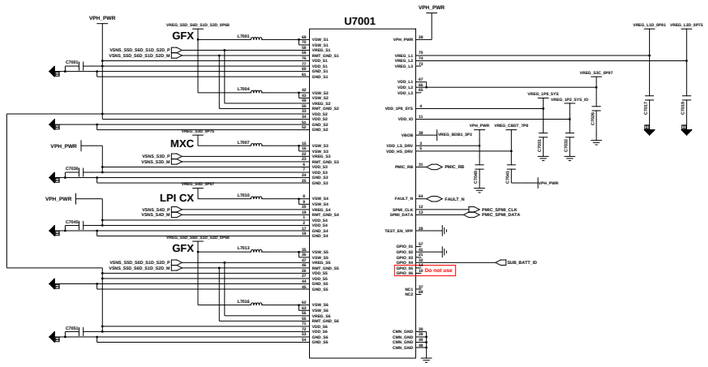

PM8550VS_D

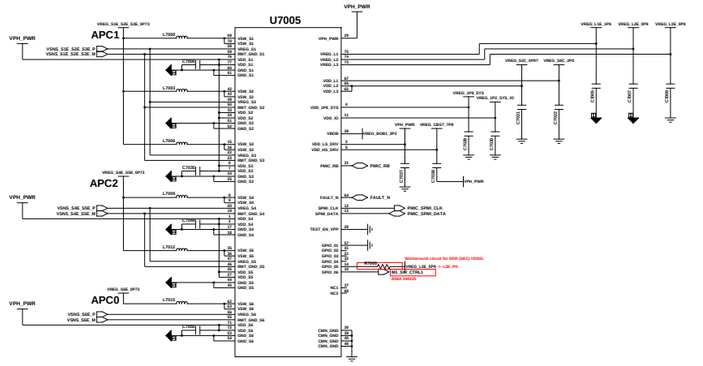

PM8550VS_E

PM8550

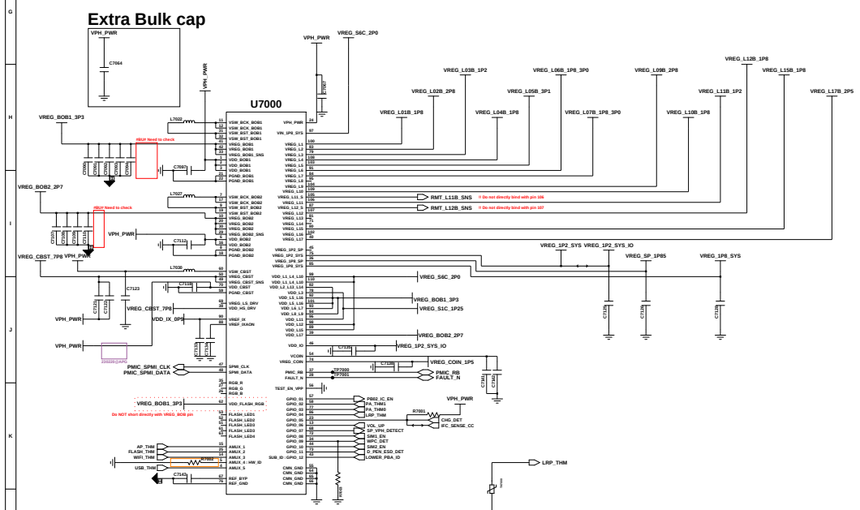

PM8550

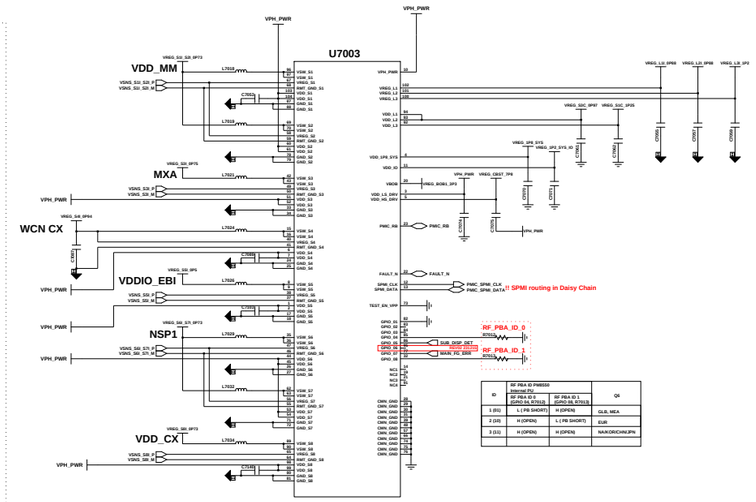

ID	RF PBA ID PM8550 Internal PU (GPIO 15 & GPIO 16)	RF PBA ID 1 (GPIO 16, PD13)	Q6
1 (R1)	L (PB SHORT)	H (OPEN)	GLB, MEA
2 (R2)	H (OPEN)	L (PB SHORT)	EUR
3 (R3)	H (OPEN)	H (OPEN)	NAK/CHN/JPN

PM8550VE_I

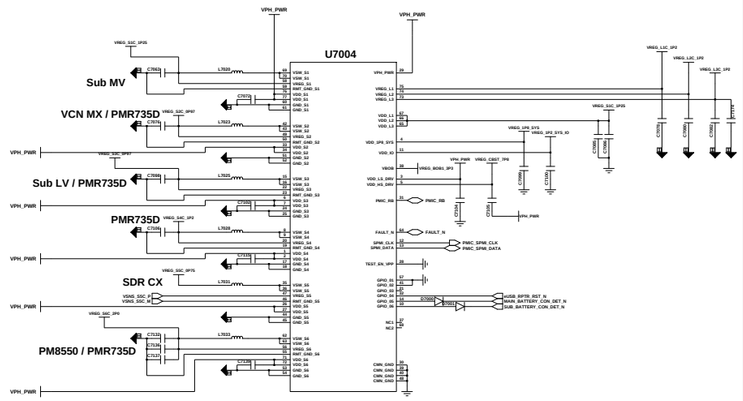

PM8550VS_C

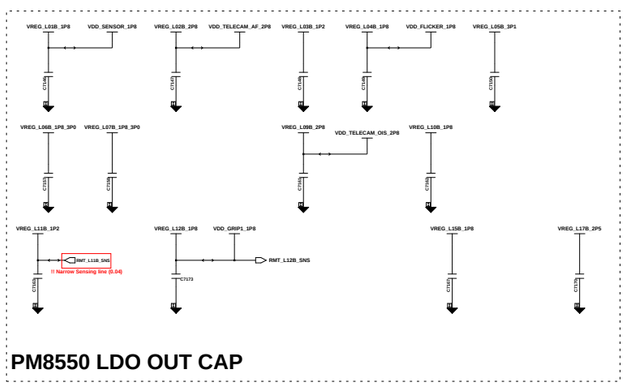

PM8550 LDO OUT CAP

H/W ID table (PM8550 AMUX_4)

HW ID	BOARD REVISION	Value	Mech
00	SM8650 SW bring-up A-Type	6.04K	
01	REV00	9.1K	
02	REV01	12.4K	
03	REV01B	18K	
04	REV02(DV1-1,1-2)	22K	
05	REV02(DV1-3~)	30K	
06	REV03	39K	
07	REV04	47K	
08	REV05	56K	
09	REV06	68K	
10	REV06A	82K	
11	REV06A(XO changed)	100K	
12		120K	
13		150K	
14		180K	
15		200K	
16		240K	
17		280K	
18		330K	
19		430K	
20		560K	
21		750K	
22		1000K	
23		1500K	
24		3000K	

PMK8650

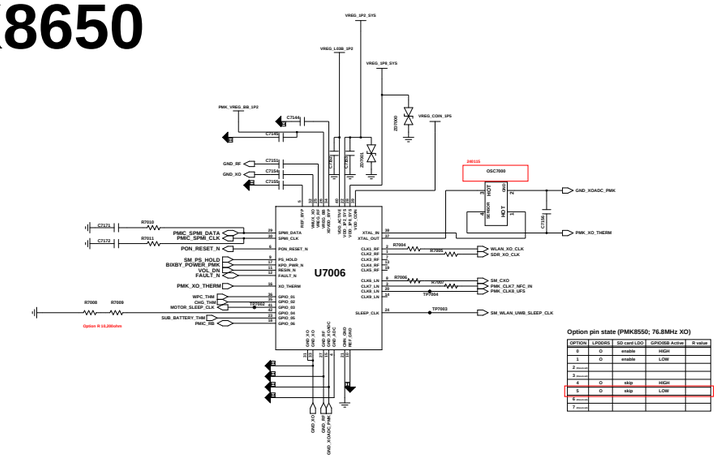

Option pin state (PMK8550; 76.8MHz XO)

OPTION	LPDDR5	SD card LDO	GPIO08B Active	R value
0	O	enable	HIGH	
1	O	enable	LOW	
2 reserved				
3 reserved				
4	O	skip	HIGH	
5	O	skip	LOW	
6 reserved				
7 reserved				

PMK8650

Ref#. 13nnn

Engineer:		SAMSUNG ELECTRONICS	
Dept:			
Screen by:			
SEC:			
R&D CHK:		TITLE: Power, Audio (1/2)	Size: 24 X 36 A
DOC CTRL CHK:			
MFG ENGR CHK:			
Q/A CHK:		SEC:	Drawing Number: Page: 17

Changed by: Ko Chin | Date Changed: Tuesday, November 15, 2022 | Time Changed: 11:00:24 am

SAMSUNG CONFIDENTIAL
THIS DOCUMENT CONTAINS CONFIDENTIAL
PROPRIETARY INFORMATION THAT IS
SAMSUNG ELECTRONICS CO'S PROPERTY.
DO NOT DISCLOSE TO OR DUPLICATE FOR OTHERS
EXCEPT AS AUTHORIZED BY SAMSUNG.

AUDIO

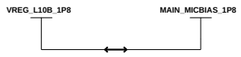

MAIN MIC BIAS

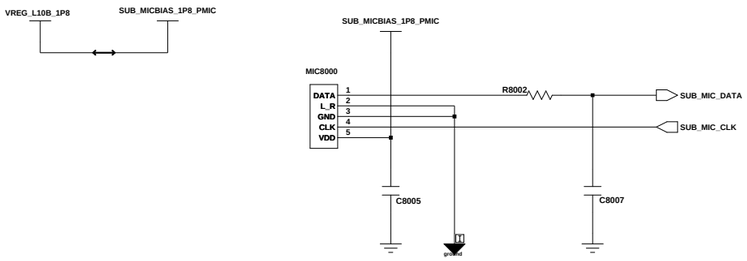

2nd MIC

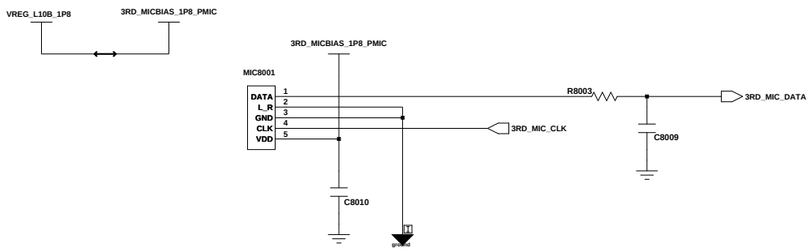

3rd MIC

AUDIO

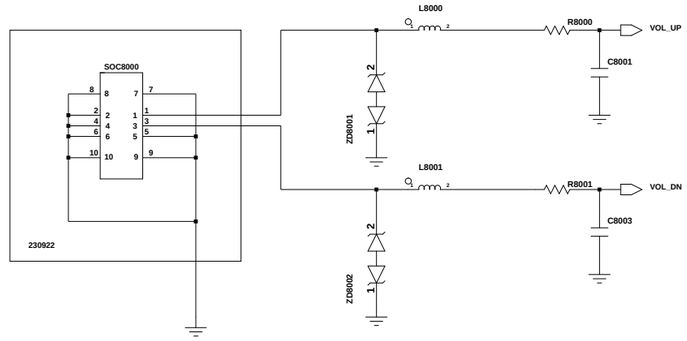

SIDE KEY (VOL)

Radiation

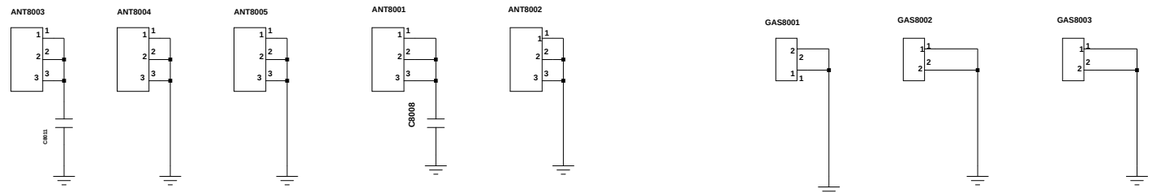

CCP

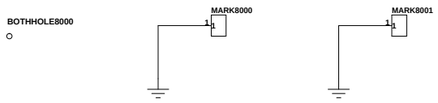

Board Screw (1.6pi)

BOSS HOLE

Engineer: SEC	SAMSUNG ELECTRONICS		
Drawn by: SEC			
R&D CHK:	TITLE: Q4_MAIN	Size: 12 1 8 A	
DOC CTRL CHK:			
MFG ENGR CHK:			
Changed by: user	Date Changed: Tuesday, April 2, 2019	Time Changed: 4:11:40 pm	QA CHK:
REV:	Drawing Number:	Page: 8	

SAMSUNG CONFIDENTIAL
THIS DOCUMENT CONTAINS CONFIDENTIAL
PROPRIETARY INFORMATION THAT IS
SAMSUNG ELECTRONICS CO'S PROPERTY.
DO NOT DISCLOSE TO OR DUPLICATE FOR OTHERS
EXCEPT AS AUTHORIZED BY SAMSUNG.

Visual CAMERA

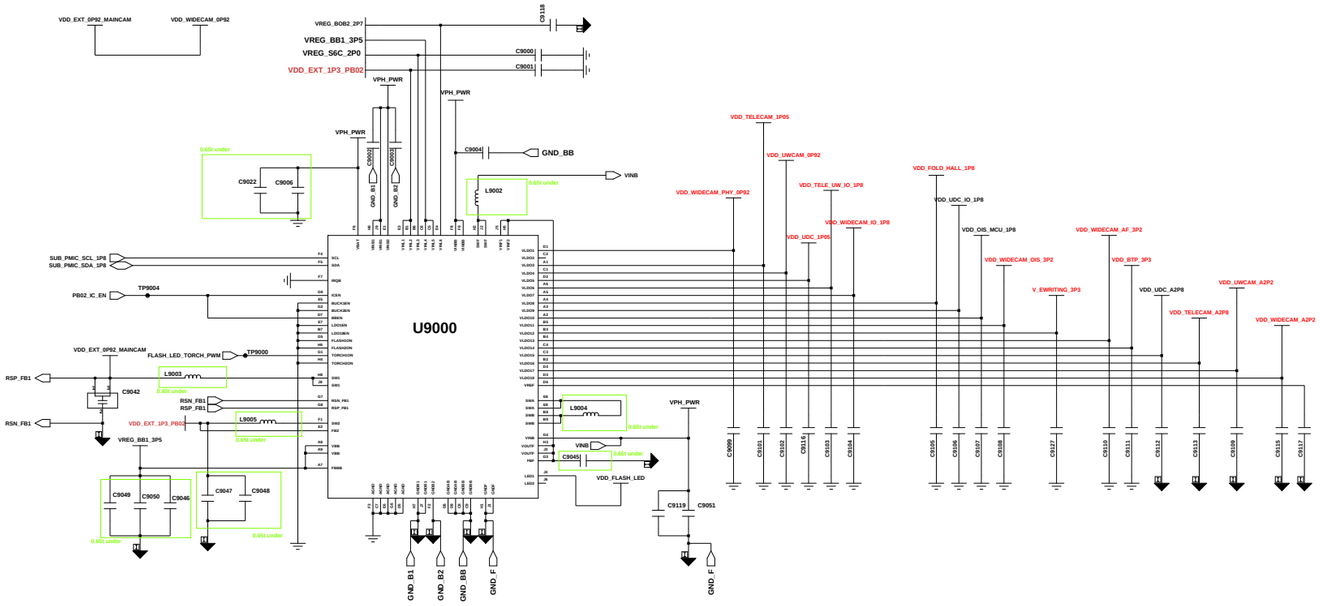

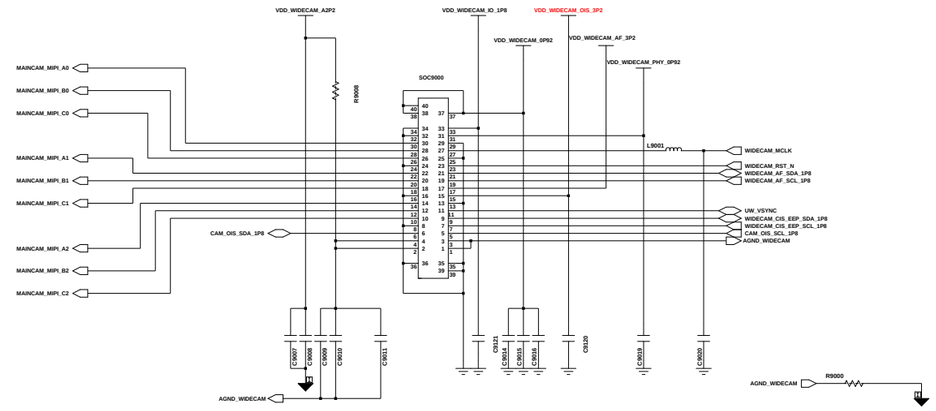

Wide CAM

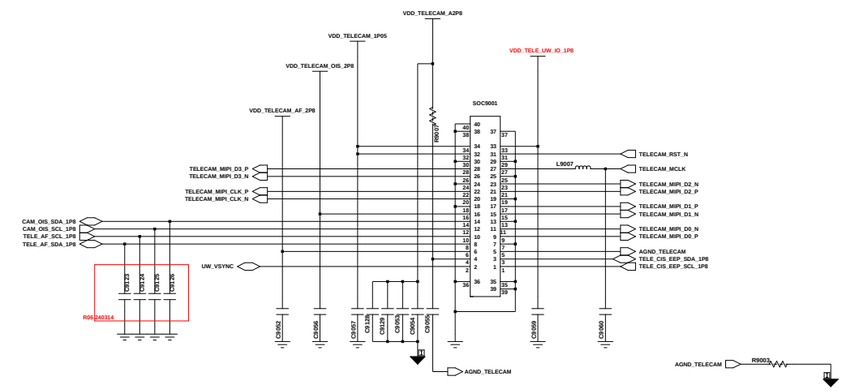

Tele CAM

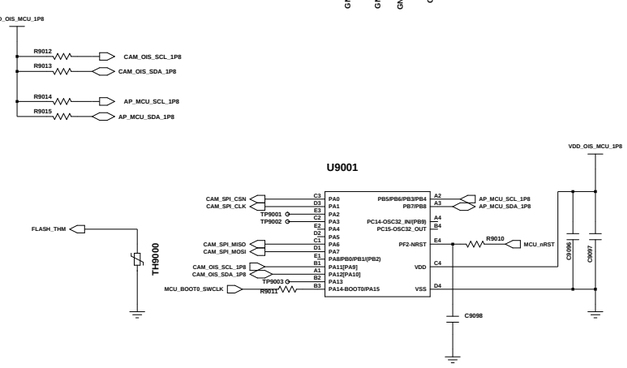

CAM MCU

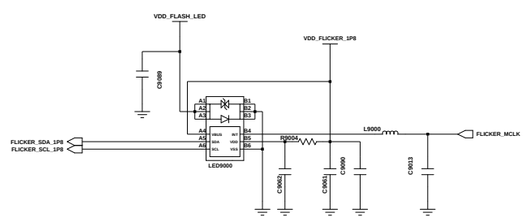

Flash LED

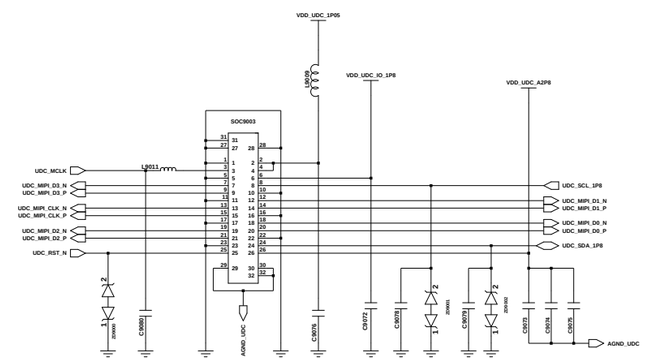

FRONT CAM (UDC)

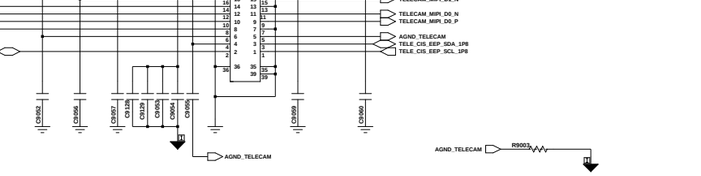

ULTRA WIDE CAM

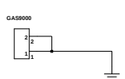

CAM DECO Contact

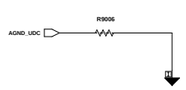

ENGINEER:	CAMERA, DISPLAY, MHL
DRAWN BY:	
R&D CHK:	TITLE: Q4_MAIN
DOC CTRL CHK:	SIZE:
MFG ENGR CHK:	

CHANGED BY:	DATE CHANGED:	TIME CHANGED:	QA CHK:	REV	DRAWING NUMBER:	PAGE: 9

SAMSUNG CONFIDENTIAL
THIS DOCUMENT CONTAINS CONFIDENTIAL
PROPRIETARY INFORMATION THAT IS
SAMSUNG ELECTRONICS CO'S PROPERTY.
DO NOT DISCLOSE TO OR DUPLICATE FOR OTHERS
EXCEPT AS AUTHORIZED BY SAMSUNG.

C2C (Conn to Conn FPCB)

System

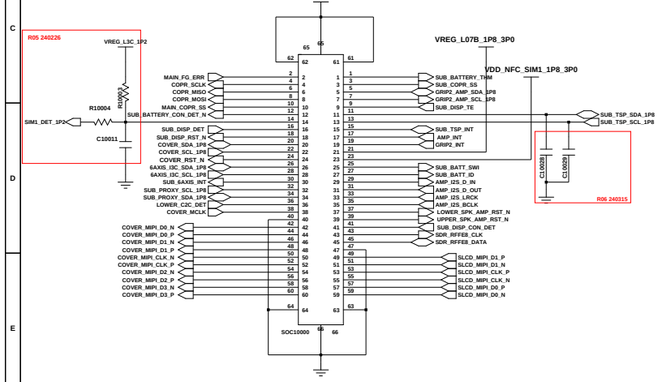

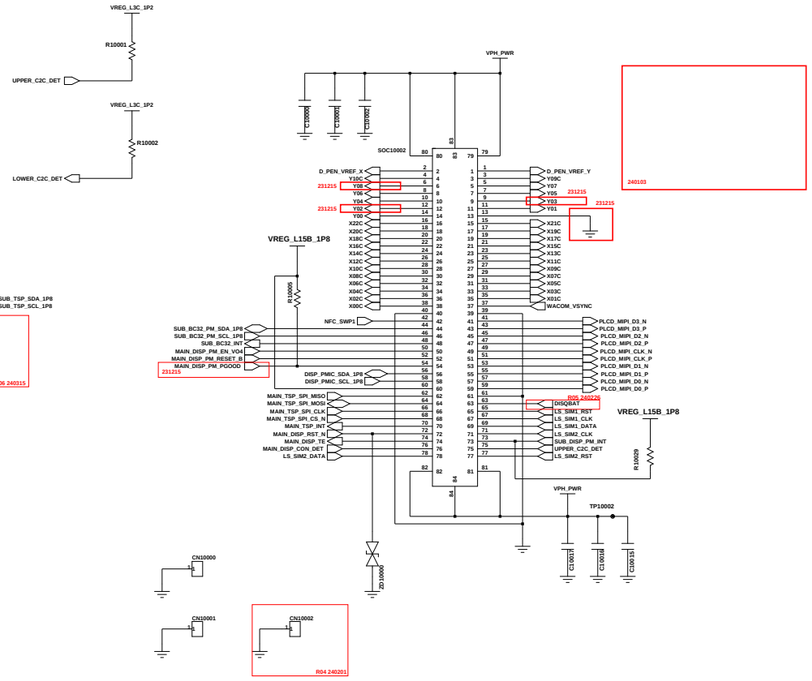

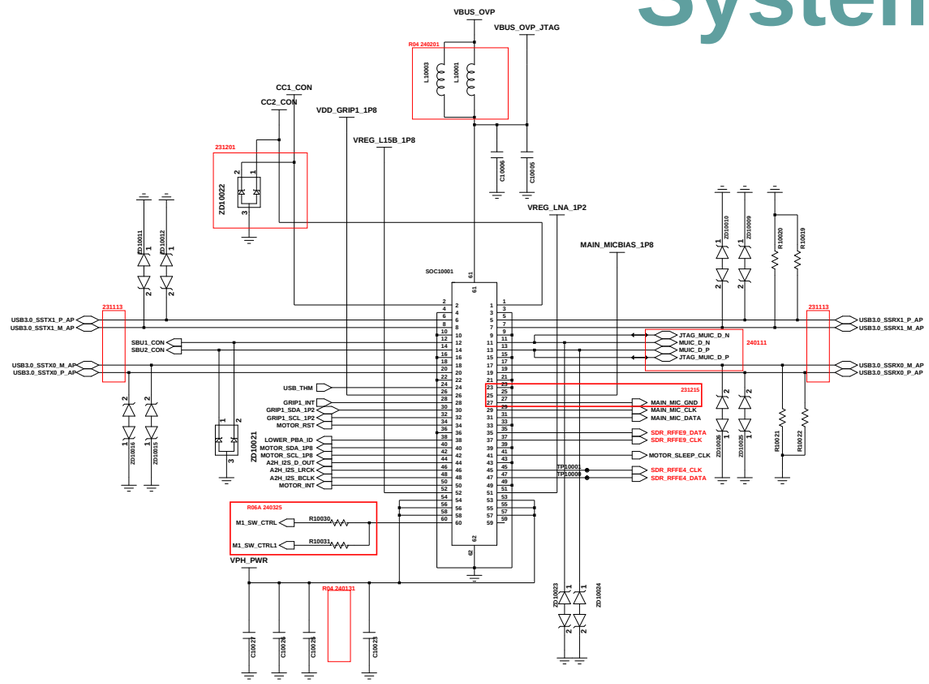

MAIN TO SUB LOWER

MAIN TO SUB UPPER

USB PCB Connector

Extra PCB

BTP

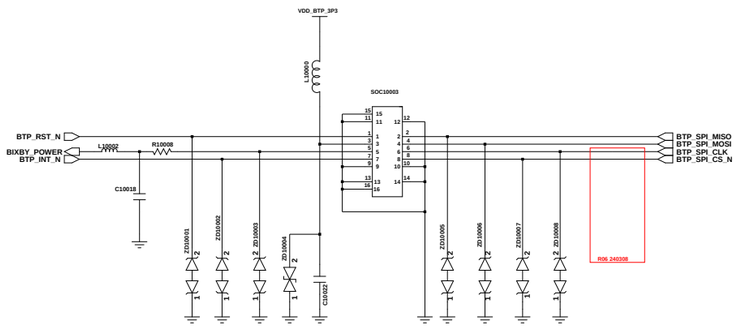

Conn Eject mark

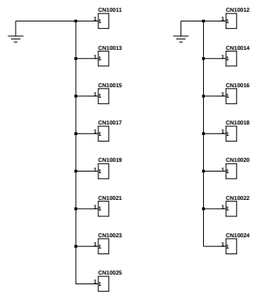

Engineer: user20	SAMSUNG ELECTRONICS		
Drawn by: user20			
R&D CHK:	TITLE: Q4_MAIN	Size:	
DOC CTRL CHK:			
MFG ENGR CHK:			
Changed by: user20	Date Changed: Thursday, June 18, 2015	Time Changed: 10:10:28 am	QA CHK:
REV	Drawing Number:	Page: 1	

SAMSUNG CONFIDENTIAL
THIS DOCUMENT CONTAINS CONFIDENTIAL
PROPRIETARY INFORMATION THAT IS
SAMSUNG ELECTRONICS CO'S PROPERTY.
DO NOT DISCLOSE TO OR DUPLICATE FOR OTHERS
EXCEPT AS AUTHORIZED BY SAMSUNG.

Visual

DIGITIZER

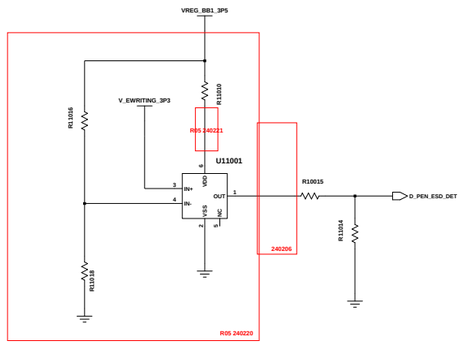

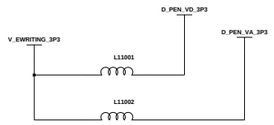

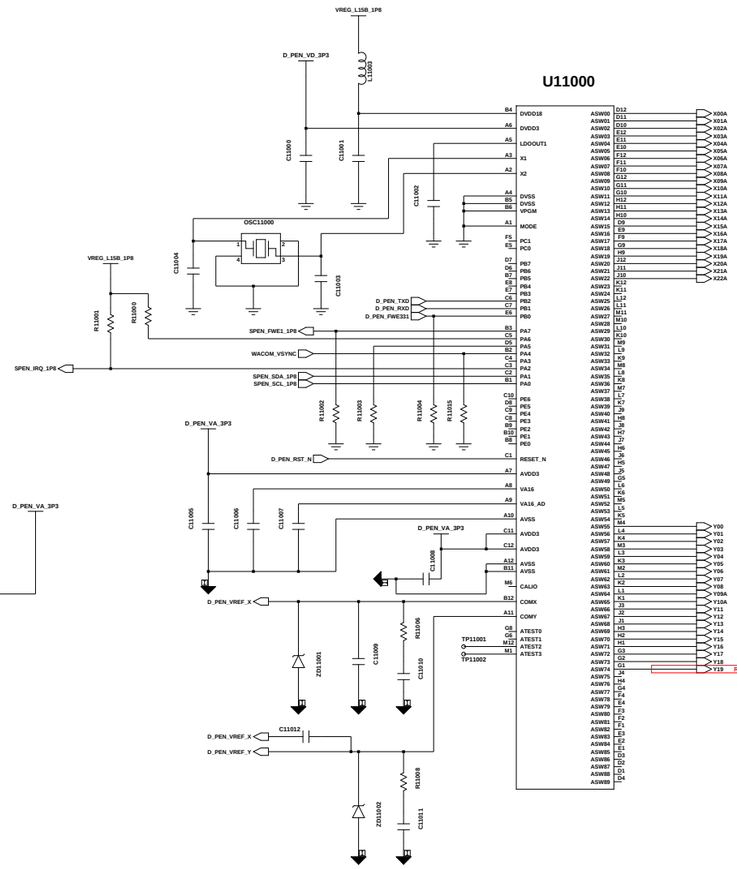

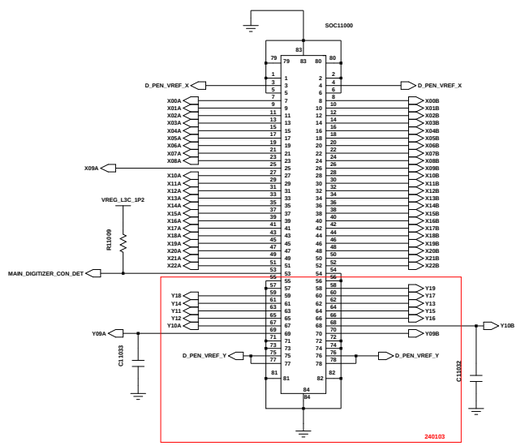

MAIN DIGITIZER Conn

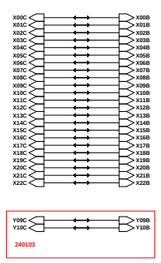

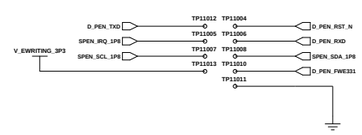

DIGITIZER TP

Engineer: user20	SAMSUNG ELECTRONICS		
Drawn by: user20			
R&D CHK:	TITLE: Q4_MAIN	Size:	
DOC CTRL CHK:			
MFG ENGR CHK:			
Changed by: user20	Date Changed: Thursday, June 18, 2015	Time Changed: 10:18:28 am	QA CHK:
REV	Drawing Number:	Page: 1	

SAMSUNG CONFIDENTIAL
THIS DOCUMENT CONTAINS CONFIDENTIAL
AND PROPRIETARY INFORMATION OF
SAMSUNG ELECTRONICS CO'S PROPERTY.
DO NOT DISCLOSE TO OR DUPLICATE FOR OTHERS
EXCEPT AS AUTHORIZED BY SAMSUNG.

Connectivity

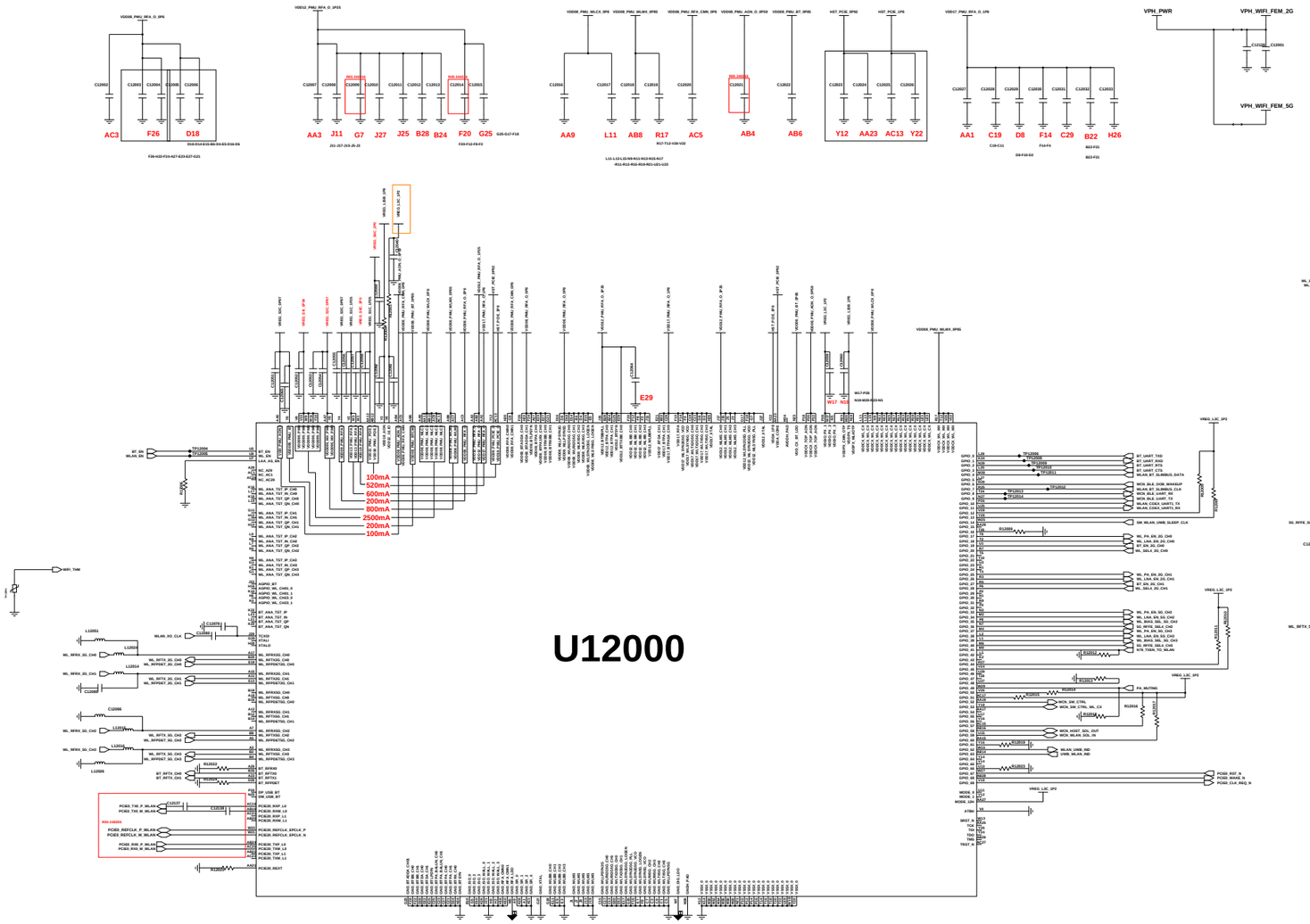

WIFI (WCN7851 CoB)

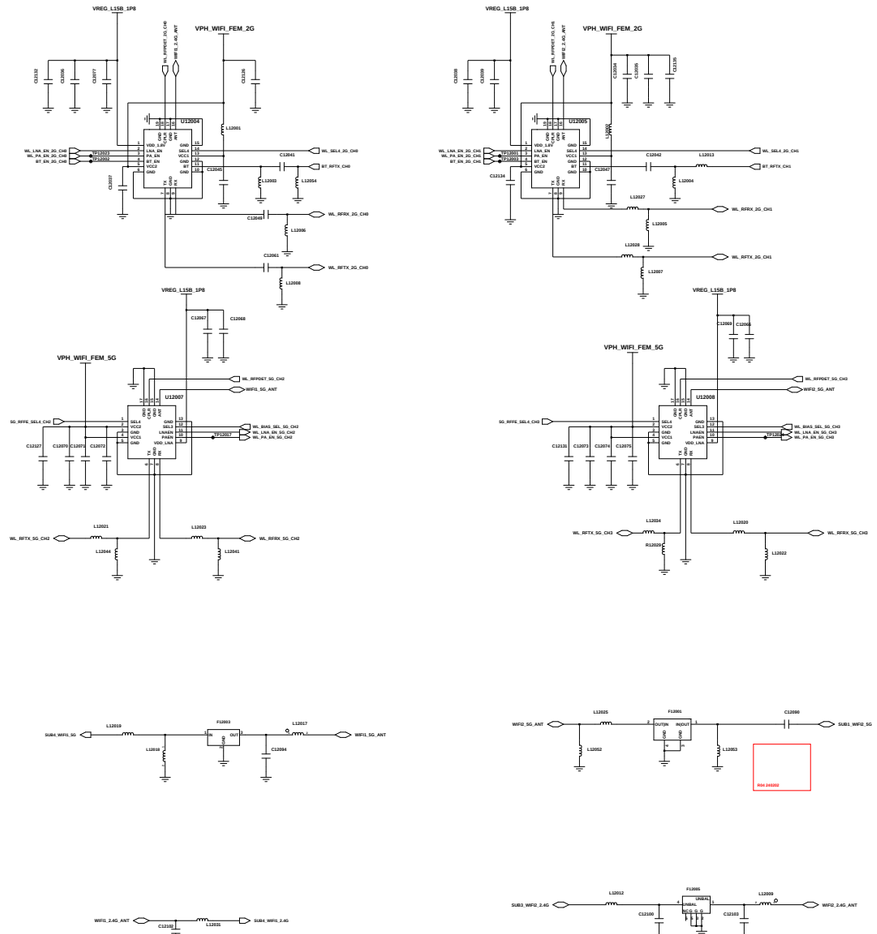

UWB

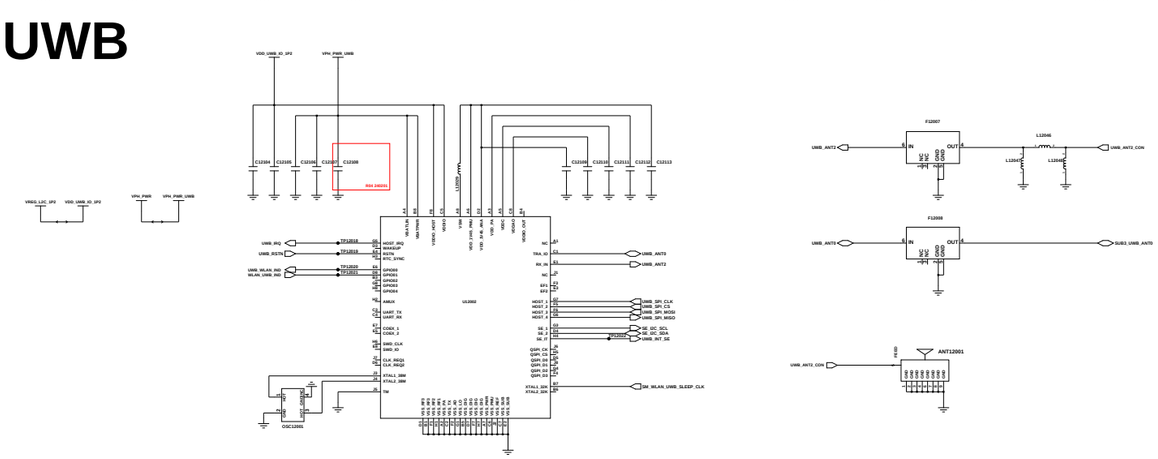

GPS_L1(for SUB4 opt)

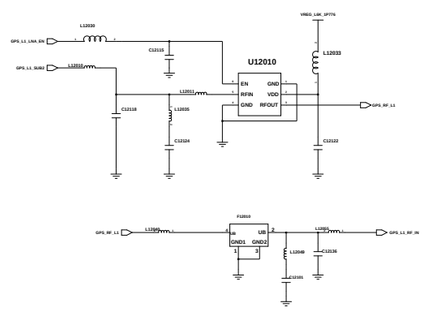

GPS_L5

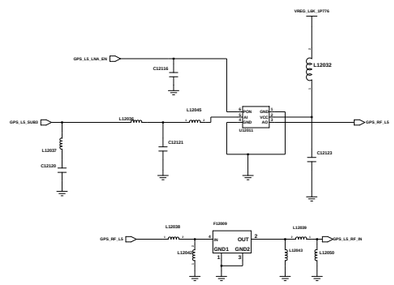

Ref#. 26nnn

Engineer: SEC	SAMSUNG ELECTRONICS
Screen by: SEC	
PMD CTRL:	TITLE: RF (3/3)
DOC CTRL CHK:	
MFG ENGR CHK:	
QA CHK:	REV: Drawing Number: Page: 26

Changed by: Date Changed: Time Changed:

SAMSUNG CONFIDENTIAL
THIS DOCUMENT CONTAINS CONFIDENTIAL
PROPRIETARY INFORMATION THAT IS
SAMSUNG ELECTRONICS CO'S PROPERTY.
DO NOT DISCLOSE TO OR DUPLICATE FOR OTHERS
EXCEPT AS AUTHORIZED BY SAMSUNG.

Q6/B_SUB_REV06A

2024.04.17

sheet01 : Display PMIC, Sub PMIC, CONNETORS

sheet02 : SPK AMP, RCV AMP, DIGITIZER

Engineer:					
Drawn by:					
R&D CHK:			TITLE:		Size:
DOC CTRL CHK:					
MFG ENGR CHK:					
Changed by:	Date Changed:	Time Changed:	QA CHK:	REV:	Drawing Number:	Page:

SAMSUNG CONFIDENTIAL
THIS DOCUMENT CONTAINS CONFIDENTIAL
PROPRIETARY INFORMATION THAT IS
SAMSUNG ELECTRONICS PROPERTY.
DO NOT DISCLOSE TO OR DUPLICATE FOR OTHERS
EXCEPT AS AUTHORIZED BY SAMSUNG.

C2C (Conn to Conn FPCB)

SYSTEM TG

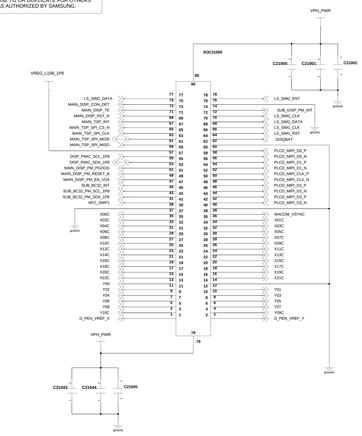

UPPER C2C FPCB(78PIN)

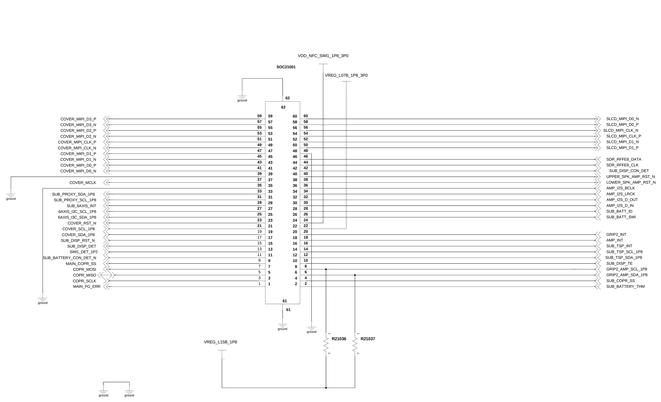

LOWER C2C FPCB(60PIN)

VISUAL TG

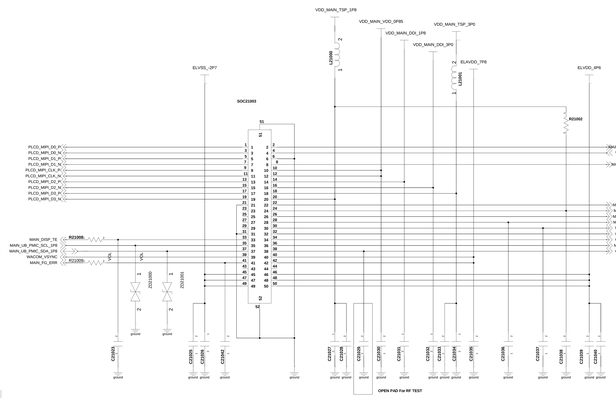

MAIN DISP. CONN(50PIN)

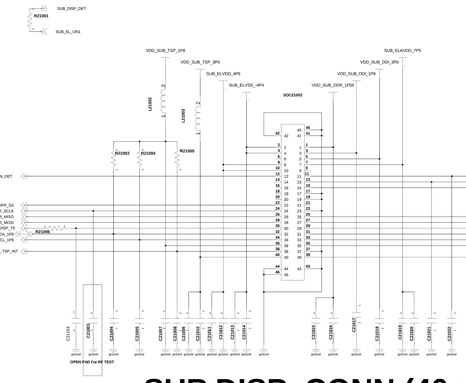

SUB DISP. CONN (40pin)

SYSTEM TG

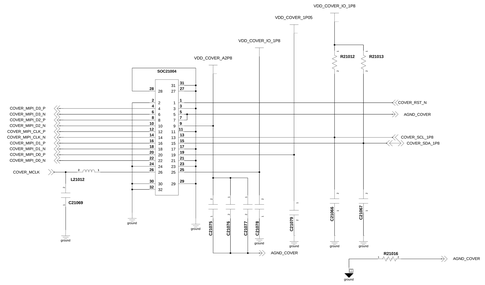

Cover VT CAM

POWER TG

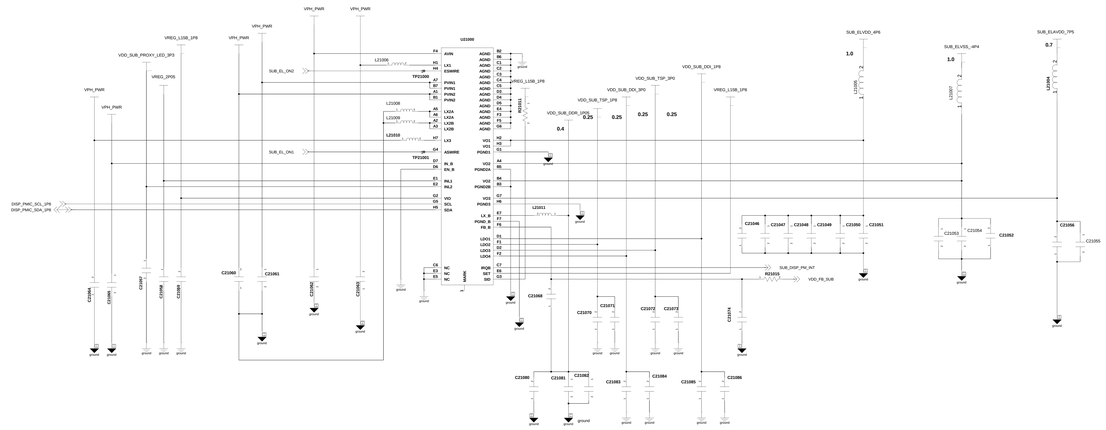

SUB DISPLAY PMIC (SM3080)

POWER TG

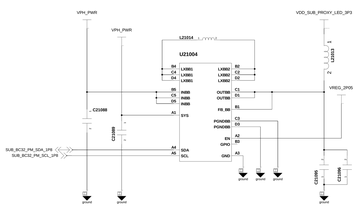

SUB_BUBKBOOST_3P3

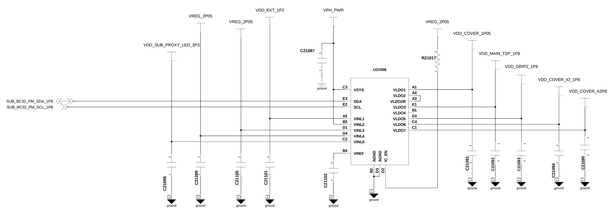

SUB PMIC (PB03) CAM POWER

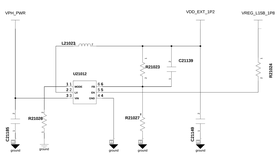

SUB_DCDC_1P3

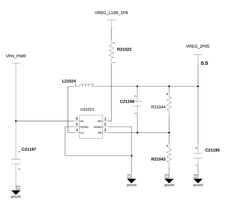

SUB_DCDC_2P05

POWER TG

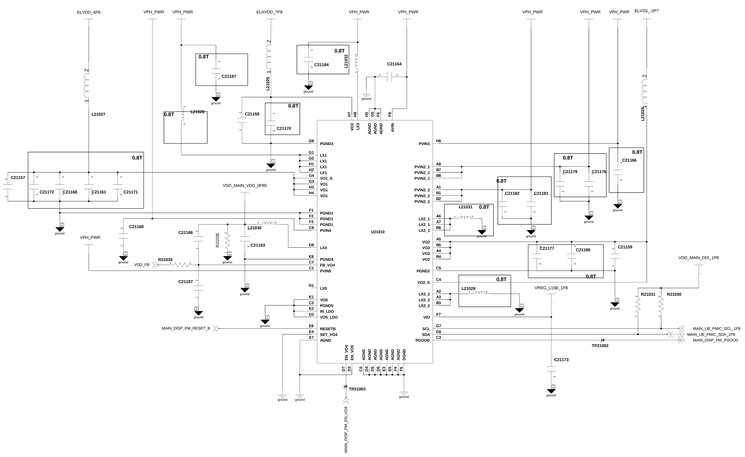

MAIN DISPLAY PMIC (SM3011)

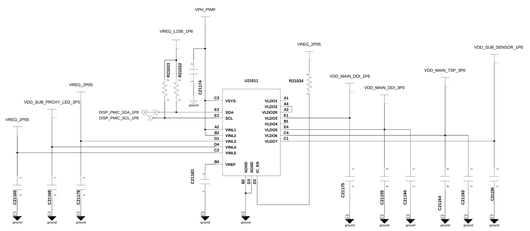

MAIN DISPLAY PMIC (PB03)

Engineer:					SAMSUNG ELECTRONICS
Drawn by:					
R&D CHK:					TITLE:
DOC CTRL CHK:					
MFG ENGR CHK:					
QA CHK:	Changed by:	Date Changed:	Time Changed:	REV:	Drawing Number: Page:

SAMSUNG CONFIDENTIAL
THIS DOCUMENT CONTAINS CONFIDENTIAL
PROPRIETARY INFORMATION THAT IS
SAMSUNG ELECTRONICS CO'S PROPERTY.
DO NOT DISCLOSE TO THIRD PARTIES FOR OTHERS
EXCEPT AS AUTHORIZED BY SAMSUNG.

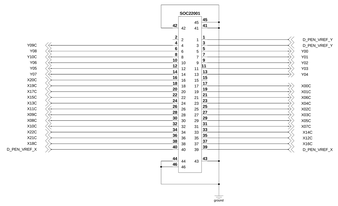

DIGITIZER FPCB(40PIN)

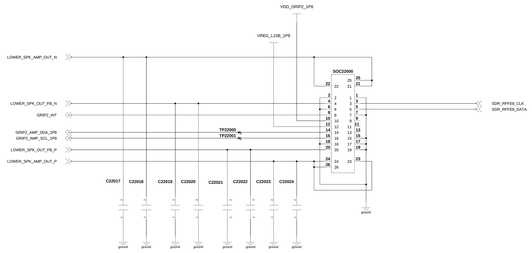

SPK+GRIP+X-GND FPCB(20PIN)

AUDIO TG

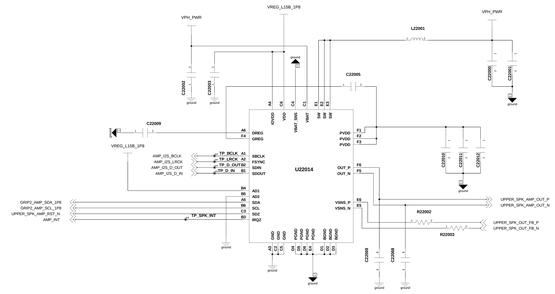

UPPER_SPK AMP

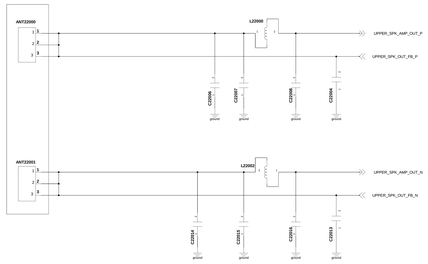

UPPER_SPK CONTACT

SYSTEM TG

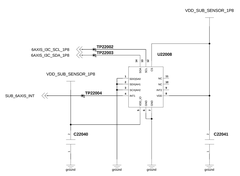

6AXIS SENSOR

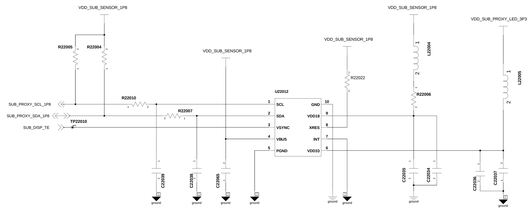

SUB Proximeter/Ambient Light Sensor

AUDIO TG

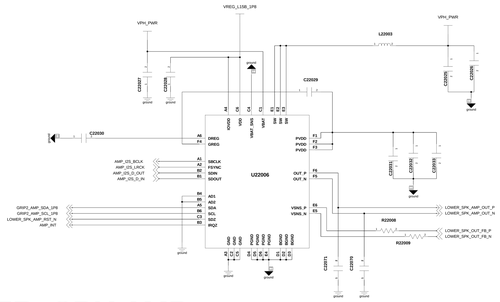

LOWER_SPK AMP

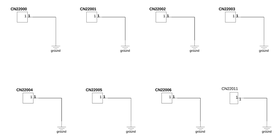

POWER TG

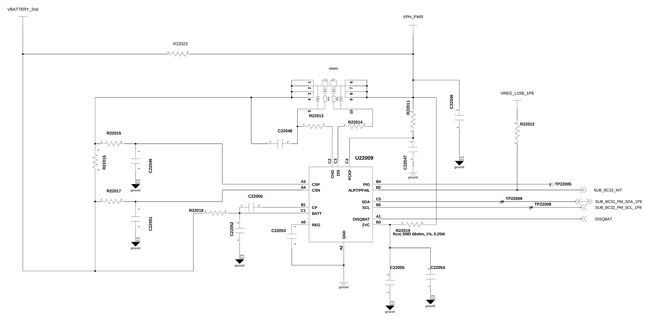

SUB BATTERY BC32

SYSTEM TG

221006 - SIM TRAY

SIM1	SIM2
PCB INNER	PCB OUTER

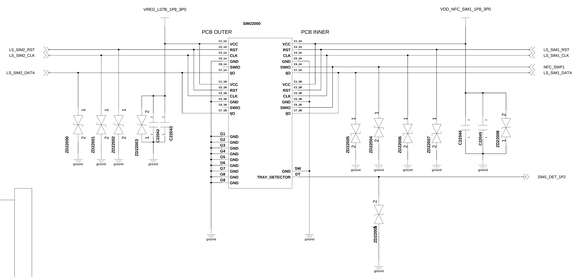

Dual SIM Socket CONN

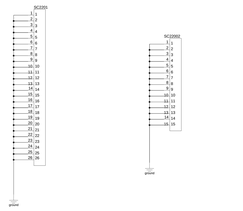

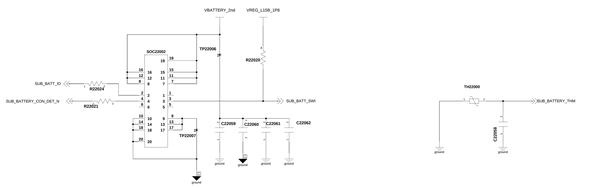

Battery Connector

BATTERY_THM

RF

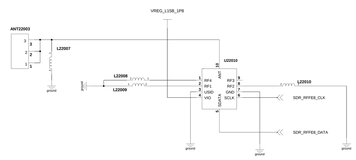

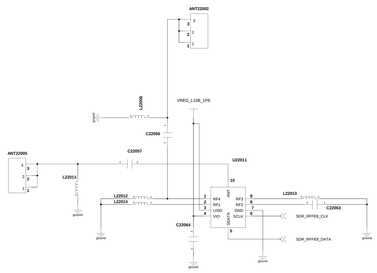

X-GND_ANT R

CCP

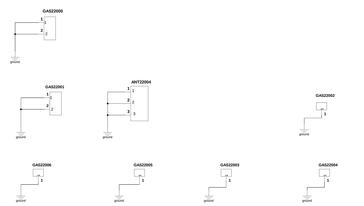

Engineer:	SAMSUNG ELECTRONICS		
Drawn by:			
R&D CHK:	TITLE:		Size:
DOC CTRL CHK:			
MFG ENGR CHK:			
QA CHK:	REV:	Drawing Number:	Page:

Changed by:	Date Changed:	Time Changed:

Q6/B_Main Lower_PCB

REV0.6 EUR

SM-F9560

2024.04.09 BOM

TITLE	Q6_Main_Lower_PCB
SIZE A1	DWG NO PDM NUMBER	REV Rev
DRAWN BY User Name	SHEET TITLE 2	DATE Drawing Date

ADC RANGE	TIPICAL VALUE	ID	EXT_PU	EXT_PD	Q6
0 - 300	0	8	NC	332K,1%	EUR_SUB6 Global_SUB6 KOR_SUB6
301 - 600	480	0	332K,1%	120K,1%	NA_mmW NA_CAN_SUB6
601 - 900	720	4	270K,1%	180K,1%	CHN_SUB6 JPN_mmW
901 - 1200	1080	5	180K,1%	270K,1%	
1201 - 1400	1320	6	120K,1%	332K,1%	
1401 - 1530	1480	7	100K,1%	470K,1%	
1531 - 1800	1800	1	332K,1%	NC	

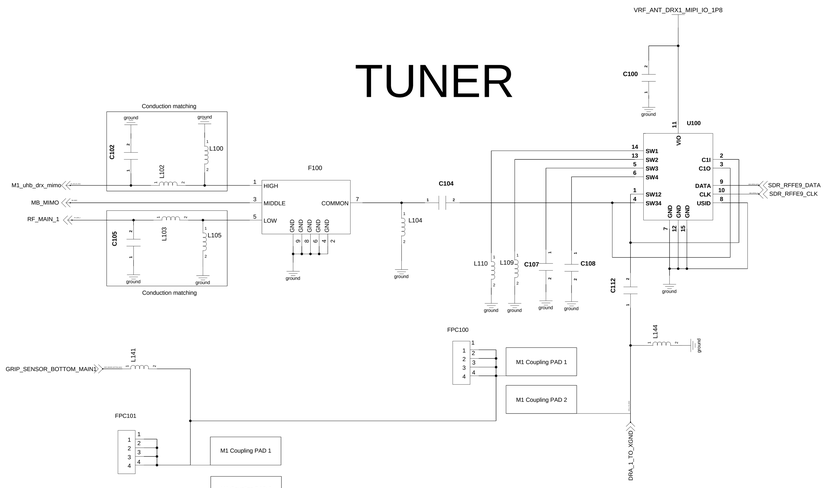

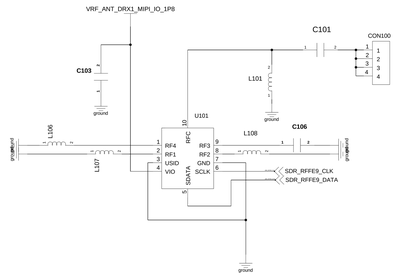

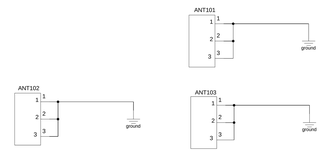

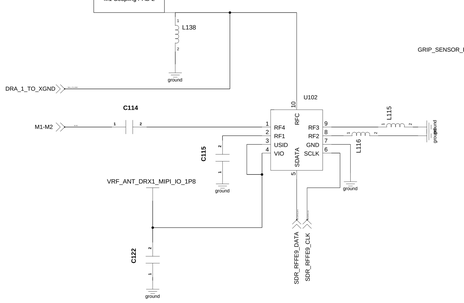

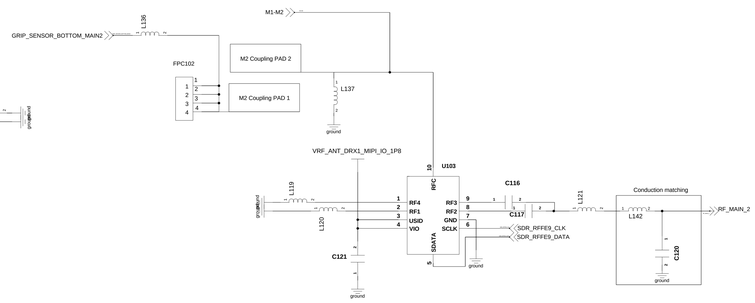

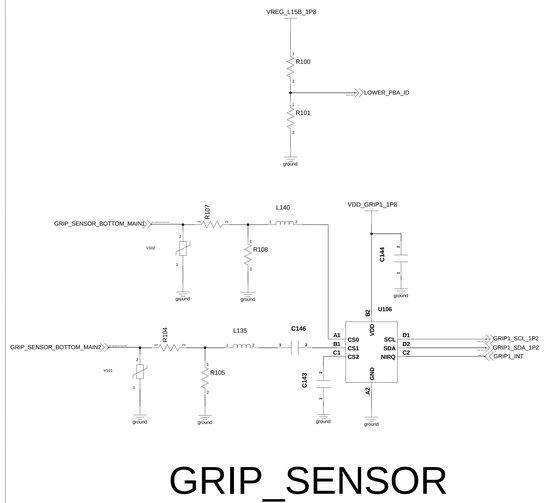

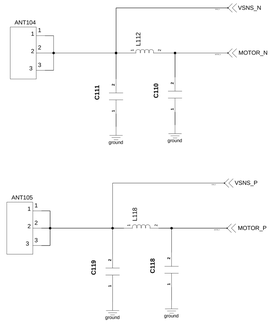

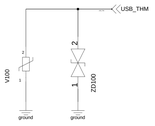

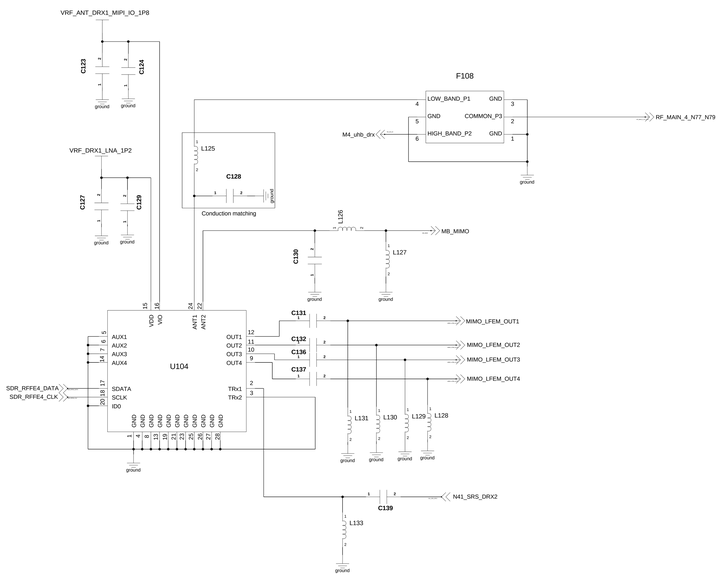

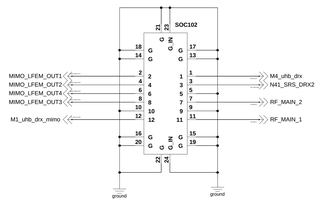

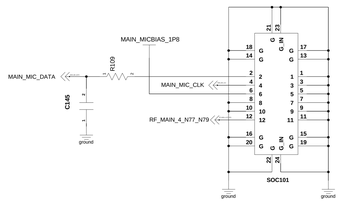

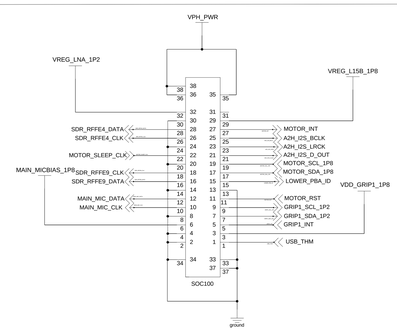

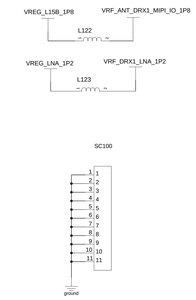

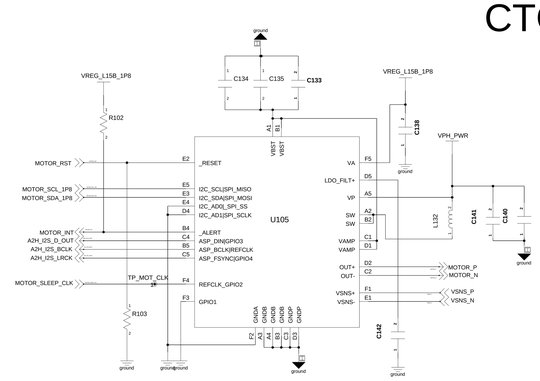

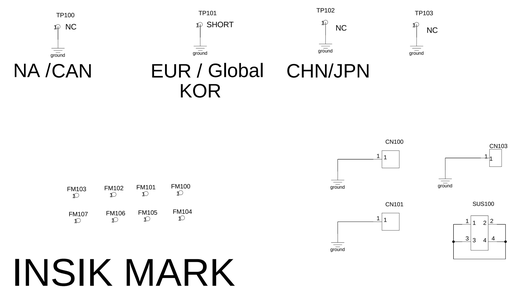

TITLE	Q6_Main_Lower_PCB
SIZE A1	DWG NO PDM NUMBER Rev
SHEET RF_LOGIC2	Drawing Date
DRAWN BY User Name	

SAMSUNG CONFIDENTIAL
THIS DOCUMENT CONTAINS CONFIDENTIAL
PROPRIETARY INFORMATION THAT IS
SAMSUNG ELECTRONICS CO'S PROPERTY.
DO NOT DISCLOSE TO OR DUPLICATE FOR OTHERS
EXCEPT AS AUTHORIZED BY SAMSUNG.

Q6/BE MAIN REV0.6A

SM-F9560

GLB
2024.03.28
SMD 2024.05.27

sheet01 : RF (1/2)
sheet02 : RF (2/2)
sheet03 : NFC, MST, MFC
sheet04 : SENSORS
sheet05 : AP_SM8650, UFS
sheet06 : AP_SM8650 POWER/GND, IF PMIC, CHARGER
sheet07 : PM8550, PM8550VS/VE
sheet08 : AUDIO
sheet09 : CAMERA, CAM MCU
sheet10 : UPPER / LOWER/ USB C2C
sheet11 : DIGITIZER
sheet12 : WIFI, GPS, UWB

SAMSUNG CONFIDENTIAL
THIS DOCUMENT CONTAINS CONFIDENTIAL
AND PROPRIETARY INFORMATION OF
SAMSUNG ELECTRONICS CO'S PROPERTY.
DO NOT DISCLOSE TO OR DUPLICATE FOR OTHERS
EXCEPT AS AUTHORIZED BY SAMSUNG.

Conduction

MAIN1 ANT
(LB)

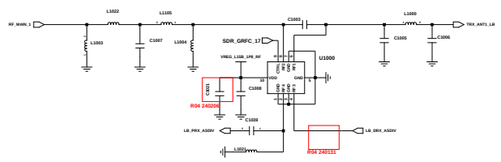

MAIN2 ANT
(MB/HB)

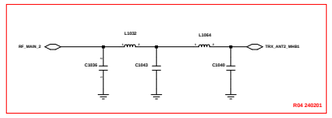

MAIN1 UHB ANT
(N77/78, N79 DRx MIMO)

MAIN4 ANT
(N77/78, N79 DRx)

230824

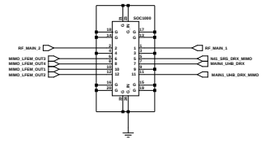

FRC_CONN (MAIN RF)

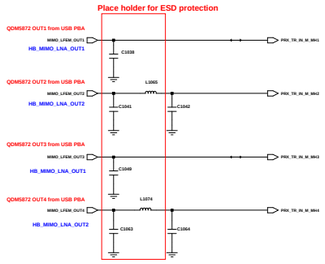

MHB MIMO_LNA OUT

NA/JPN : SMD
EUR/GLB/KOR/CHN: NC(SOC1001 only)
decap/bead SMD

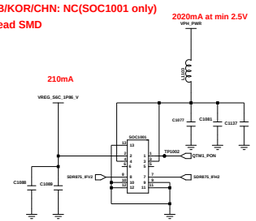

mmW_ANT_CONN (Left)

NA/EUR/GLB/KOR/CHN/JPN: NC(SOC1002 only)
decap SMD

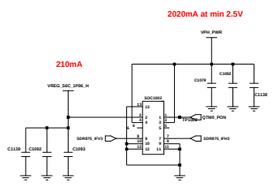

Need to check connector P/N and pin map

mmW_ANT_CONN (Right)

Conduction

LB LPAMiD
(B5/8/12/13/14/17/20/26/28/29/71, G850/900)

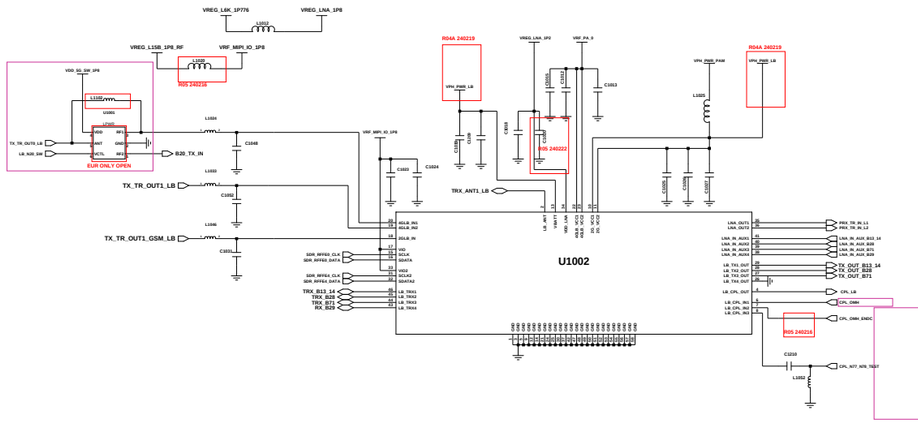

THERMISTER
(QPM6810A)

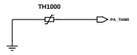

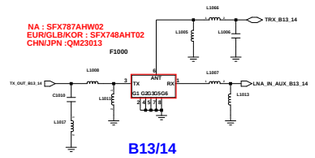

B13/14

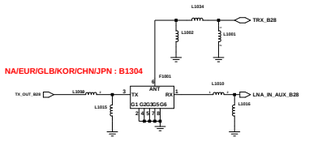

B28

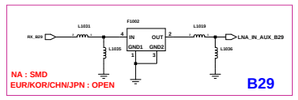

NA : SMD
EUR/KOR/CHN/JPN : OPEN

B29

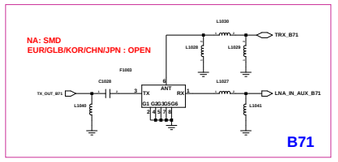

B71

230901

OMH LPAMID
(B1/2/3/4/7/25/30/34/38/39/40/41/66, G1800/1900)

THERMISTER
(QPM7815/6815A)

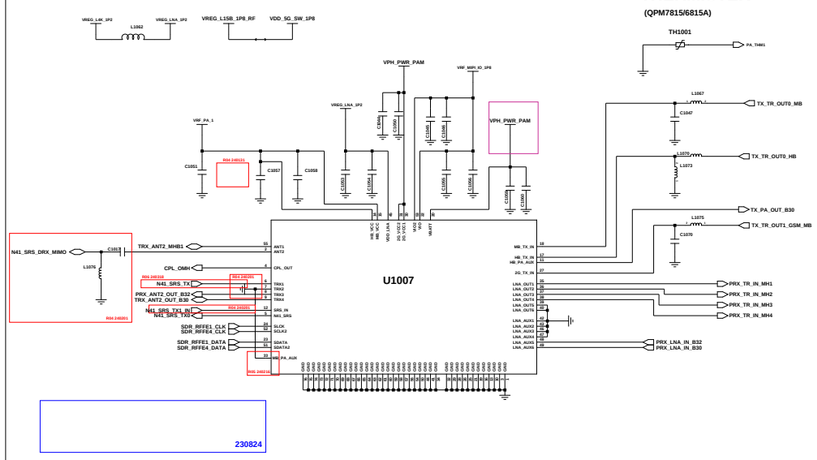

230824

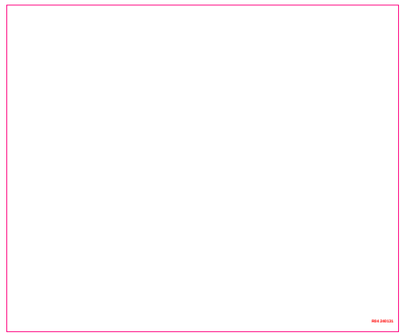

R04 240131

B21 SMD option

NA/EUR/GLB/KOR/CHN : OPEN

EUR/GLB/KOR/CHN/JPN : OPEN
NA : SMD

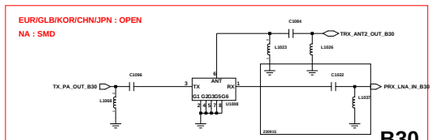

B30

NA/GLB/KOR/CHN/JPN : OPEN
EUR : SMD

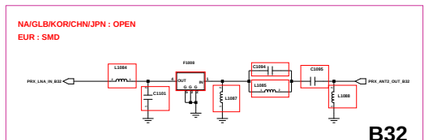

B32

APT Modulator(QM81050)

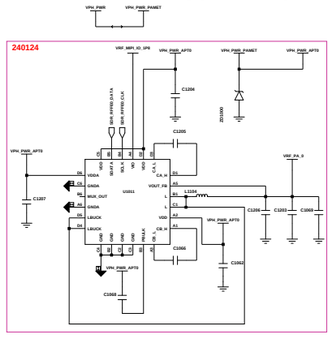

APT Modulator(QET6105#1)

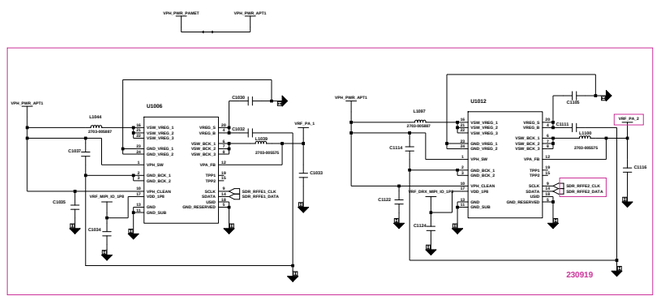

APT Modulator(QET6105#2)

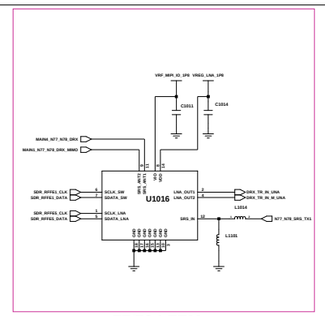

n77/78 LFEM

NA/EUR/KOR OPEN
CHN/JPN SMD

n79 LFEM

230824

EU : SMD
NA/KOR/CHN/JPN : OPEN

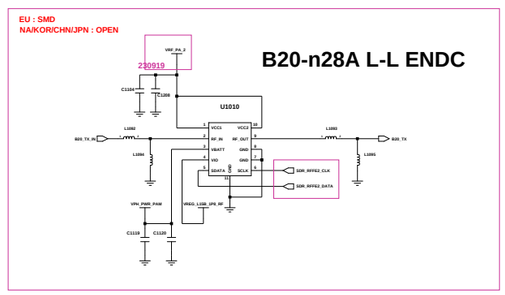

B20-n28A L-L ENDC

Engineer:	SAMSUNG ELECTRONICS
Drawn by:	
Edit by:	
Edit Date:	TITLE:
DOC CTRL Date:	RF (U3)
MFG ENGR Date:	
QA Date:	REV: / Drawing Number: / Page:

Changed by: / Date Changed: / Time Changed:

SAMSUNG CONFIDENTIAL
THIS DOCUMENT CONTAINS CONFIDENTIAL
AND PROPRIETARY INFORMATION OF
SAMSUNG ELECTRONICS CO'S PROPERTY.
DO NOT DISCLOSE TO OR DUPLICATE FOR OTHERS
EXCEPT AS AUTHORIZED BY SAMSUNG.

Conduction TRANSCEIVER(SDR875)

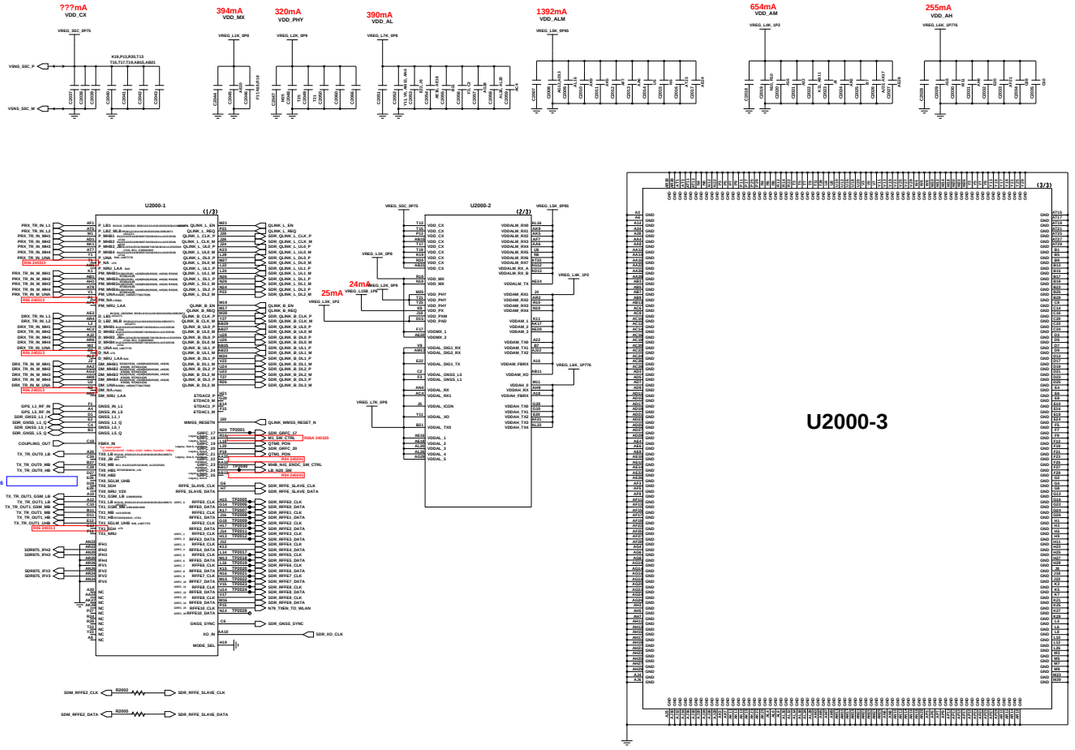

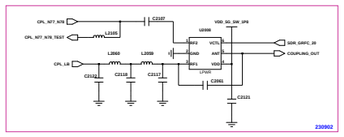

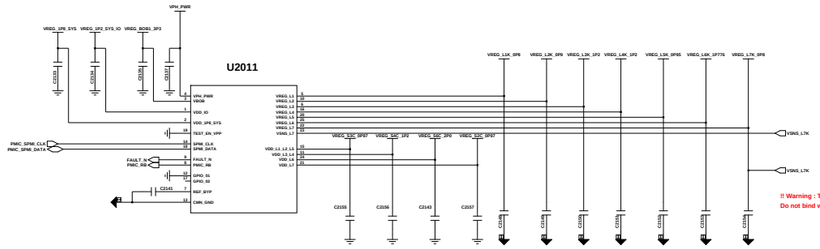

RF PMIC PMR735D

UHB LPAMID
(B42/48, N77/78/79)

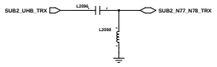

DRX_ANT

SUB ANT1
(IB)

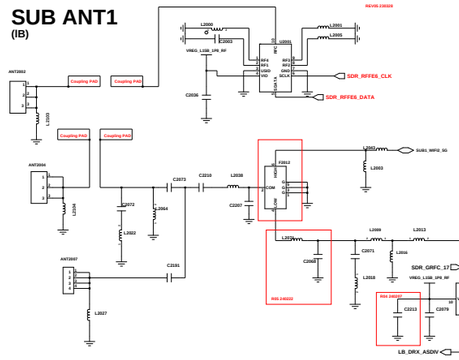

Radiation Conduction

SUB ANT2
(mB/hB, N41/N77/78/N79,L1)

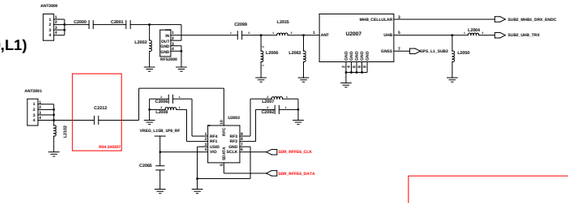

SUB3 ANT
(n77/78/79, L5, UWB, WIFI2_2.4G)

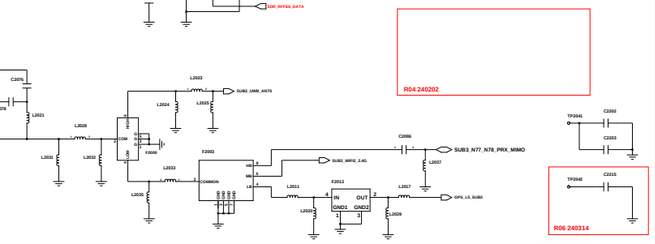

DRX_LB
(B5/8/12/13/14/17/18/19/20/26/28/29/71_G850/900)

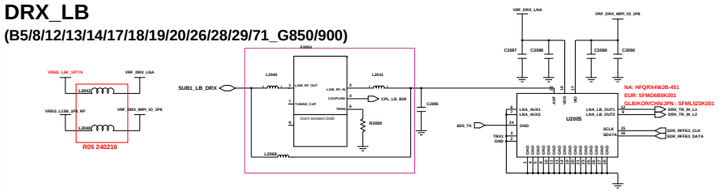

SUB4 ANT (MHB DRx MIMO, WiFi1)

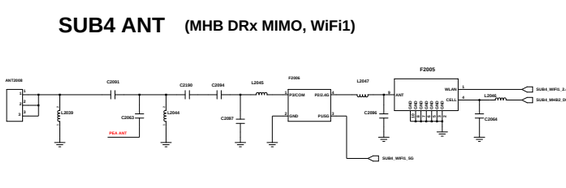

DRX_MHB_1 (ENDC)
(B1/2/3/4/7/25/30/39/41/66_DCS/PCS)

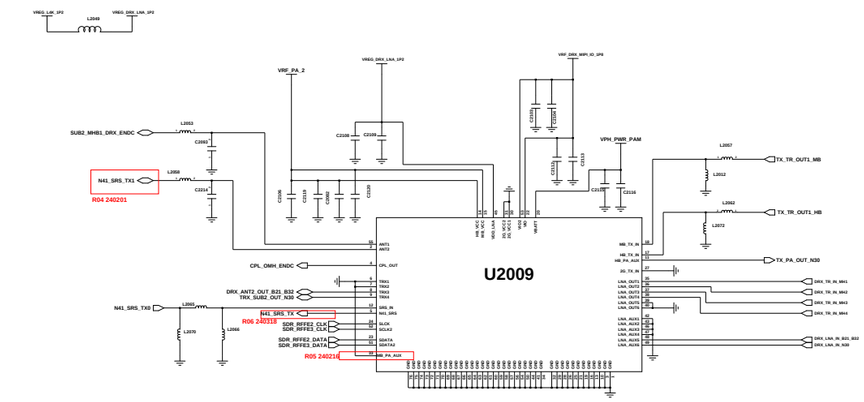

DRX_MHB_2
(B1/2/3/4/7/25/30/39/41/66)

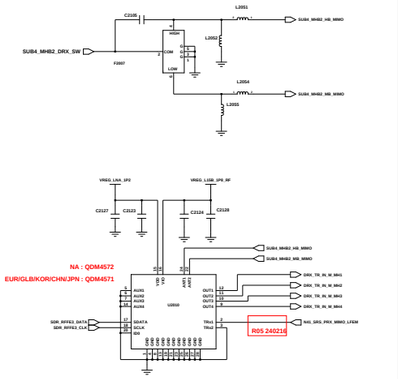

N41 SRS

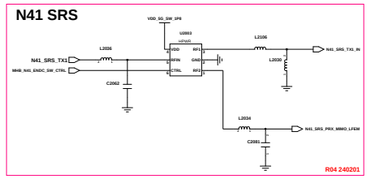

N30

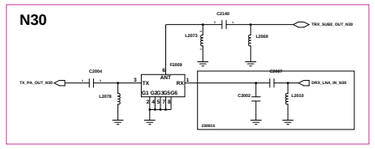

B21/B32/N75

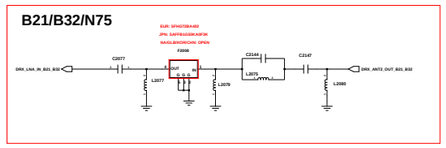

UHB
(B42/48, n77/78)

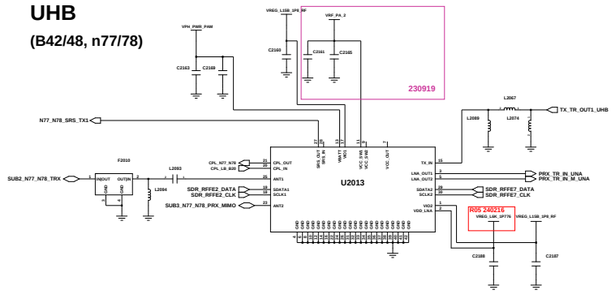

UHB
(n79)

Engineer:	SAMSUNG ELECTRONICS
Schematic by:	
PCB CTRL:	TITLE: RF (2/3)
DOC CTRL CHK:	
MFG ENGR CHK:	
Q4 CHK:	REV: Drawing Number: Page: 18

Changed by: Date Changed: Time Changed:

SAMSUNG CONFIDENTIAL
THIS DOCUMENT CONTAINS CONFIDENTIAL
PROPRIETARY INFORMATION THAT IS
SAMSUNG ELECTRONICS CO'S PROPERTY.
DO NOT DISCLOSE TO OR DUPLICATE FOR OTHERS
EXCEPT AS AUTHORIZED BY SAMSUNG.

Connectivity

SKU	SIM	NFC IC	Maker P/N	#1(0)	#2(20K)	#3(220nF)	L/S #2 pSIM
NA/CAN	Nano + eSIM	SN300UBV1	SN300UUK/B52LH0	SHORT	SMD	SMD	OPEN
KOR	Nano + eSIM	SN300UV1	SN300UUK/B529S0	SHORT	SMD	SMD	OPEN
EUR/Global	2 Nano + eSIM	SN300UV1	SN300UUK/B529S0	SHORT	SMD	SMD	SMD
CHN	2 Nano	SN300TV1	SN300TUK/B52C20	OPEN	OPEN	OPEN	SMD
JPN	Nano + eSIM	SN300PV1	SN300PUK/B52H80	SHORT	SMD	SMD	OPEN

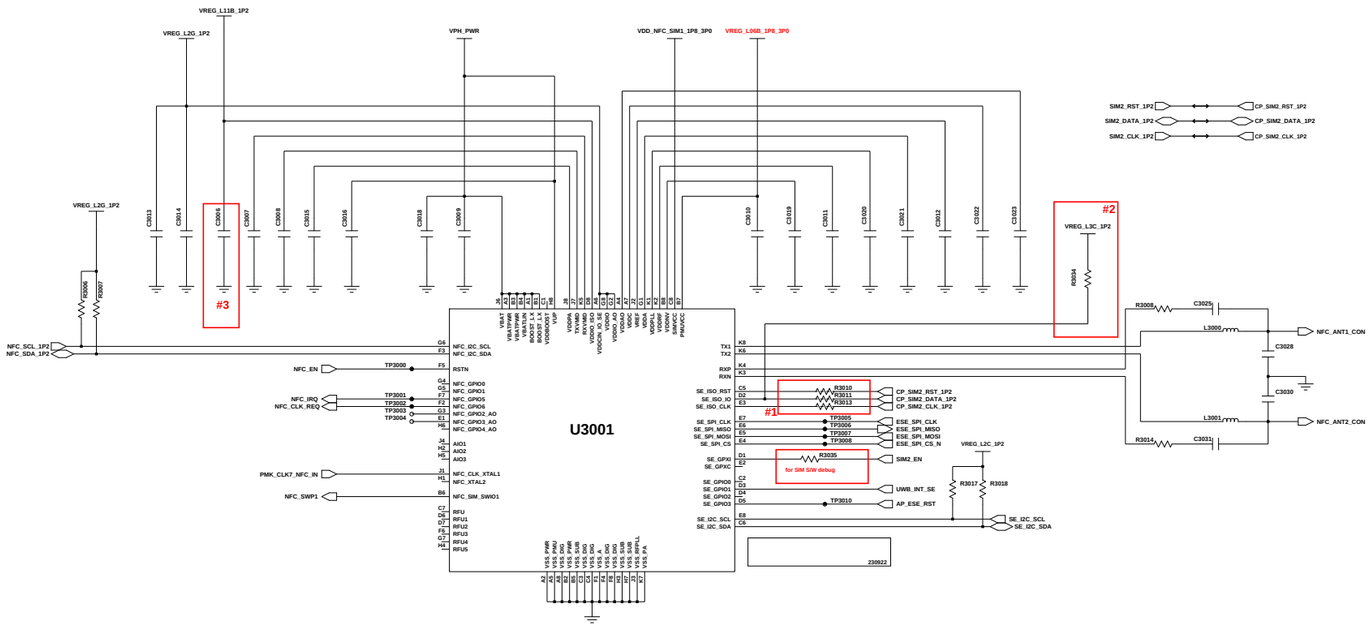

NFC + eSIM Combo

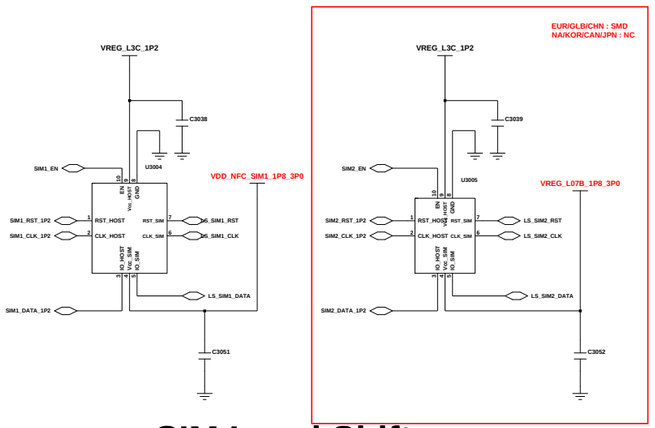

SIM Level Shifter

Power

WPC_MST_NFC_CONN

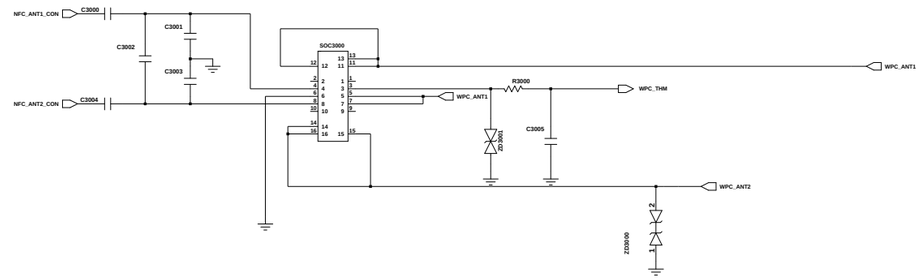

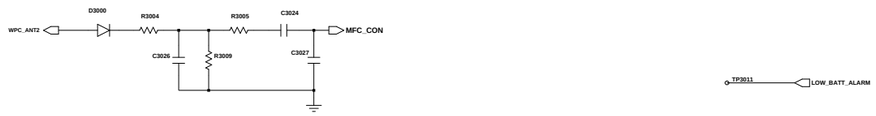

MFC TX MODE

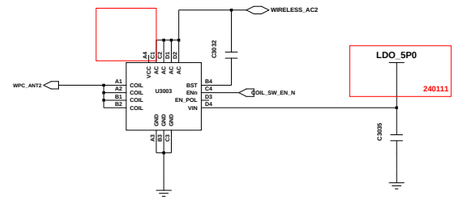

MST Switch

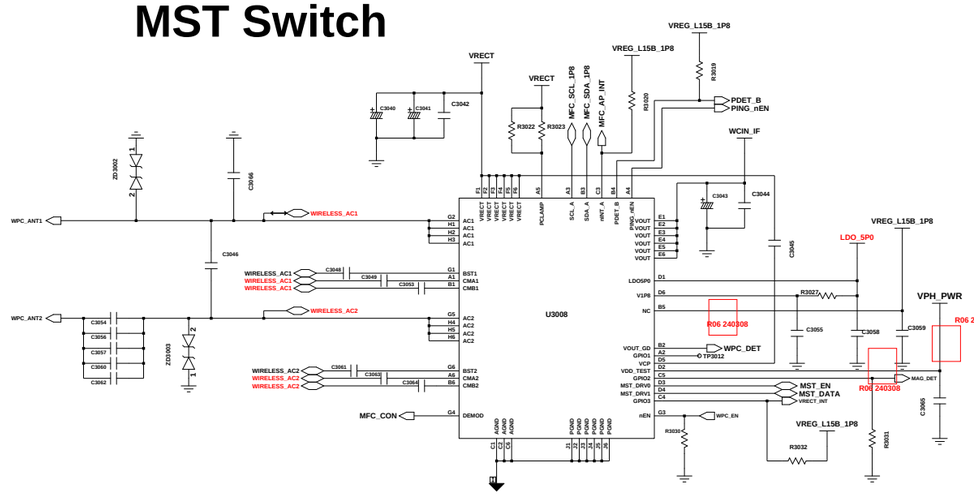

MFC IC

Engineer	SEC
Drawn by:	SEC
R&D CHK:	
DOC CTRL CHK:	
MFG ENGR CHK:	
QA CHK:	

TITLE:
Size:
Drawing Number

Changed by:	Date Changed:	Time Changed:

SAMSUNG CONFIDENTIAL
THIS DOCUMENT CONTAINS CONFIDENTIAL
PROPRIETARY INFORMATION THAT IS
SAMSUNG ELECTRONICS CO'S PROPERTY.
DO NOT DISCLOSE TO OR DUPLICATE FOR OTHERS
EXCEPT AS AUTHORIZED BY SAMSUNG.

System

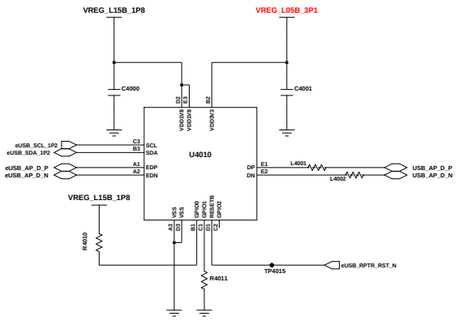

eUSB REPEATER

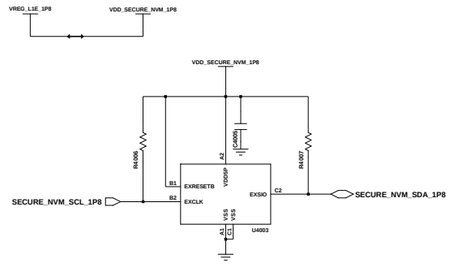

SECURE NVM

SENSORS

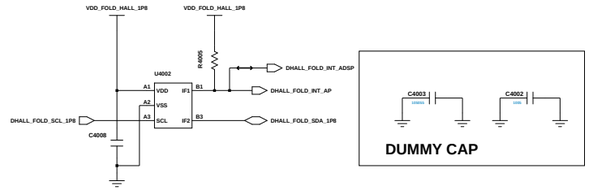

SMART HALL IC (FOLD)

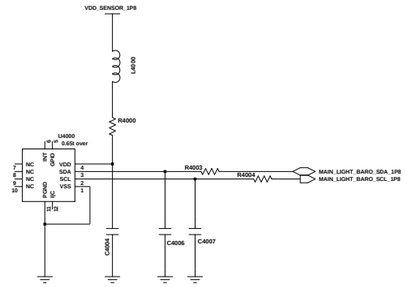

Ambient Light Sensor

Design

SHIELDCAN

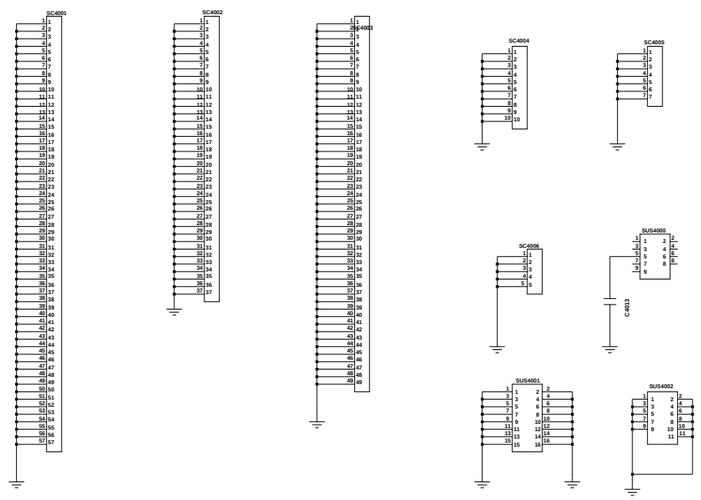

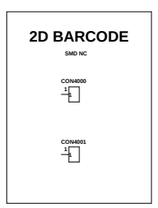

Memory type

256GB TP4008

512GB TP4009

1TB TP4010

Model type

KOR(N) CHN (0) NA (U/W) TP4011 TP4016

JPN (D) EUR (B) TP4012 TP4017

GLB (E) TP4013 TP4018

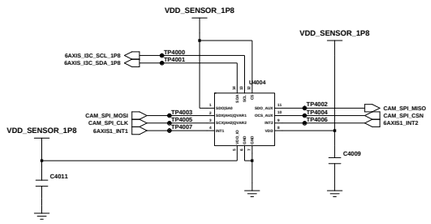

6 Axis SENSOR (GYRO,ACCEL)

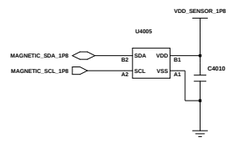

Magnetic SENSOR

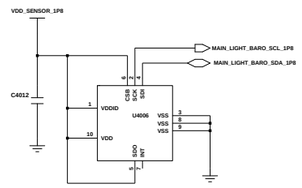

Barometer Sensor

Engineer	SEC		
Drawn by:	SEC		
R&D CHK:		TITLE:	Size:
DOC CTRL CHK:			
MFG ENGR CHK:			
Changed by:	Date Changed:	Time Changed:	QA CHK:
			Drawing Number

SAMSUNG CONFIDENTIAL
THIS DOCUMENT CONTAINS CONFIDENTIAL
AND PROPRIETARY INFORMATION OF
SAMSUNG ELECTRONICS CO'S PROPERTY.
DO NOT DISCLOSE TO OR DUPLICATE FOR OTHERS
EXCEPT AS AUTHORIZED BY SAMSUNG.

SM8650 System

(POWER decap, GND)

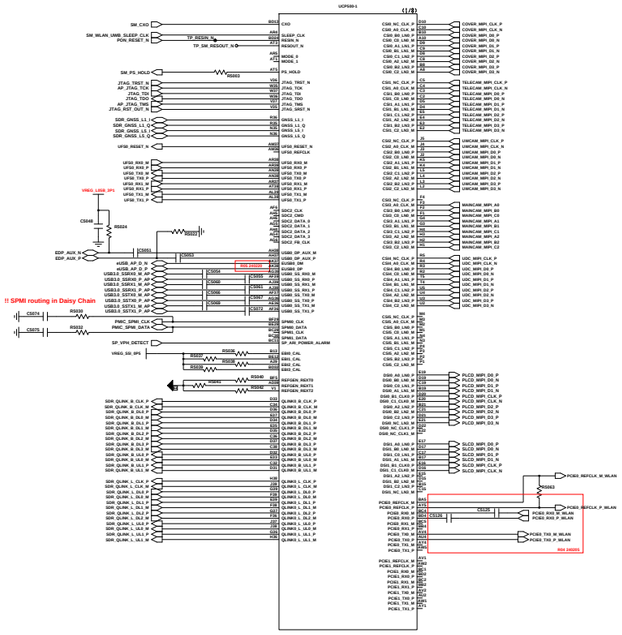

I2C PULL UP

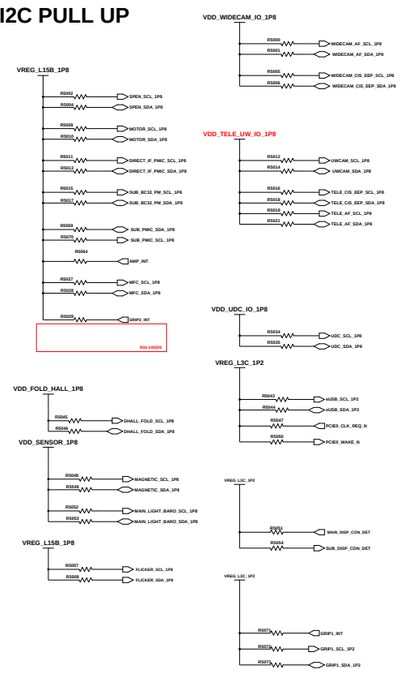

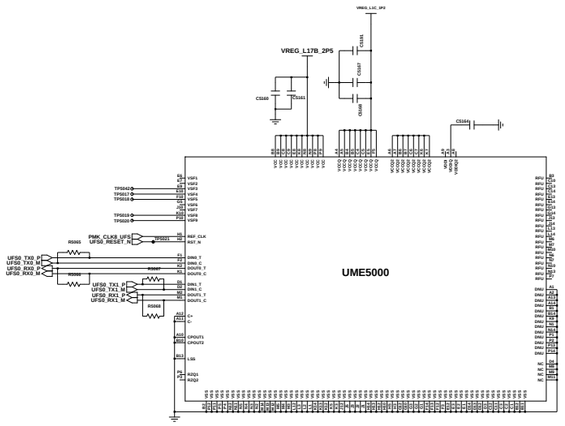

UFS4.0 256GB

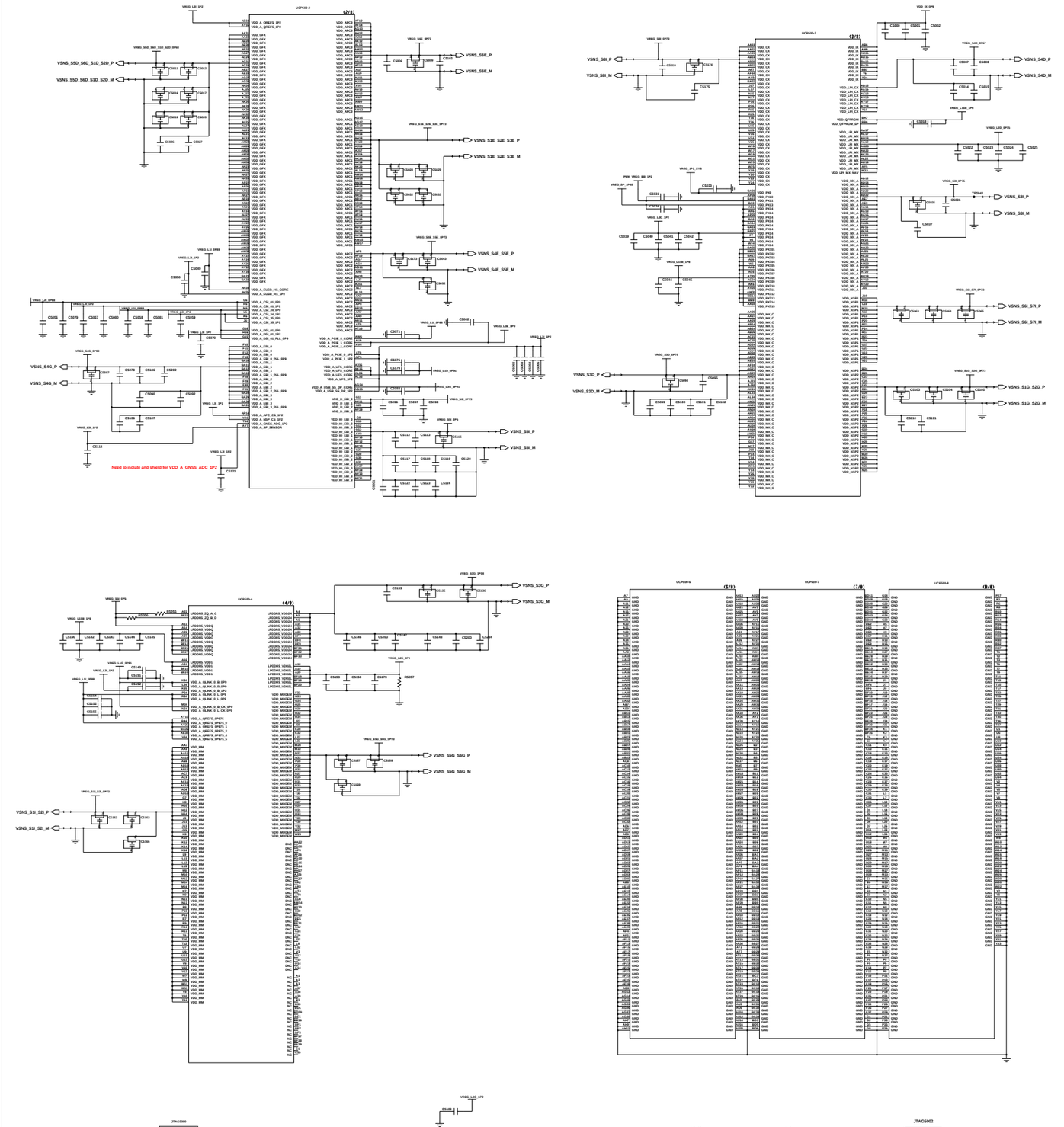

AP JTAG CONNECTOR

(3711-007173 / AXE612124)

PCB array JTAG

Engineer: SEC		SAMSUNG ELECTRONICS	
Screen by: SEC			
PMIC CTRL Chkt:		TITLE: AP	Size:
DDC CTRL Chkt:			
MFG ENGR Chkt:			
Changed by:	Date Changed:	Time Changed:	REV: Drawing Number: Page:

SAMSUNG CONFIDENTIAL
THIS DOCUMENT CONTAINS CONFIDENTIAL PROPRIETARY INFORMATION THAT IS SAMSUNG ELECTRONICS CO'S PROPERTY. DO NOT DISCLOSE TO OR DUPLICATE FOR OTHERS EXCEPT AS AUTHORIZED BY SAMSUNG.

Charger block

Power

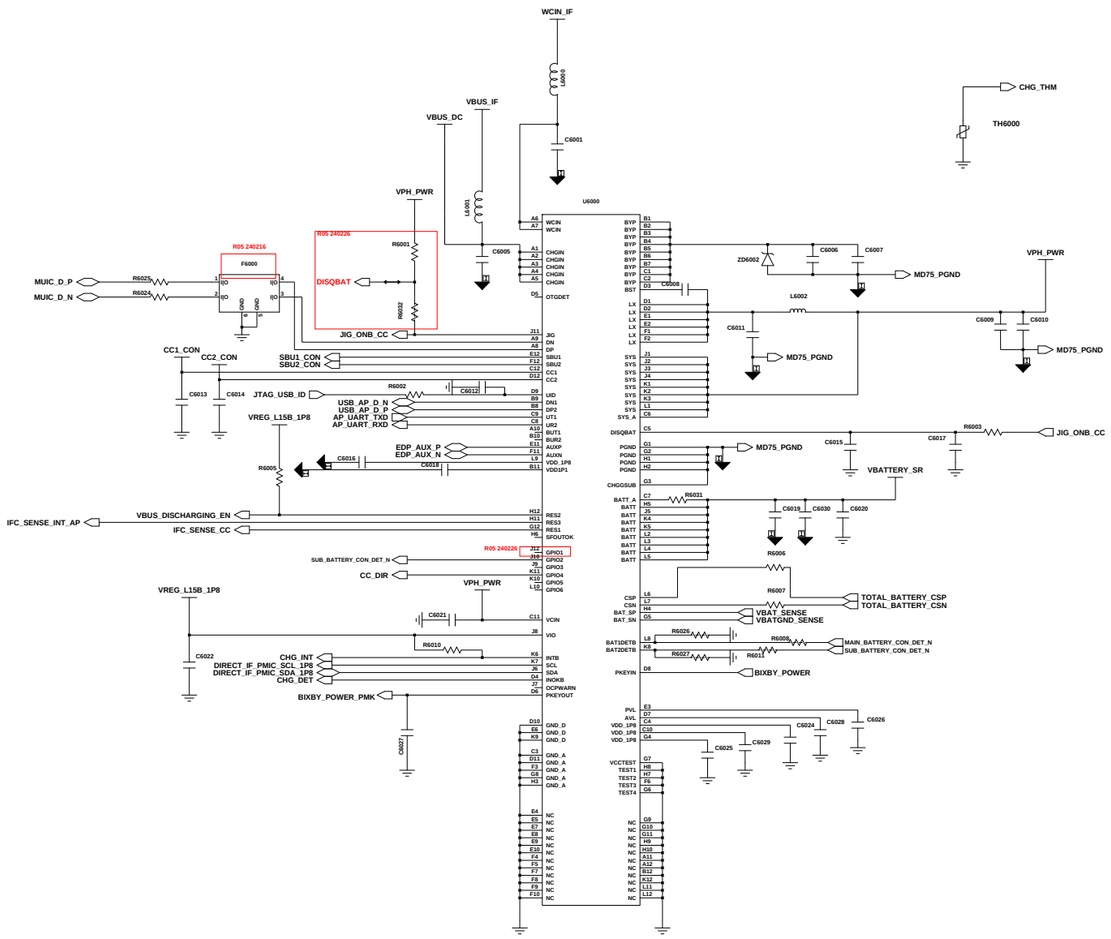

IFPMIC (MD75)

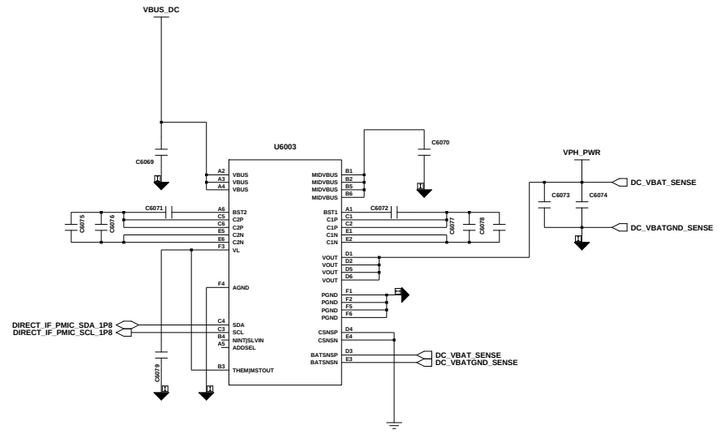

Direct Charging

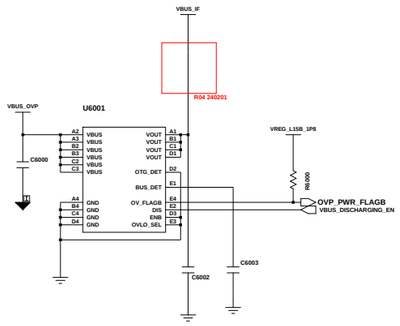

OVP

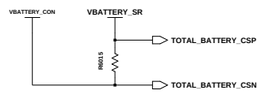

MAIN BATTERY BC32

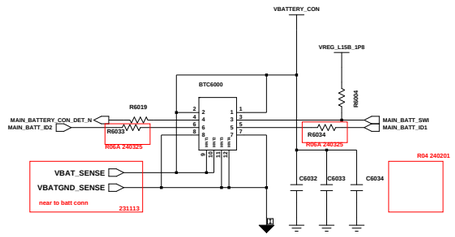

MAIN BATTERY CON

Engineer: SEC	SAMSUNG ELECTRONICS		
Drawn by: SEC			
R&D CHK:	TITLE: IF PMIC	Size: 16 1 12 A	
DOC CTRL CHK:			
MFG ENGR CHK:			
Changed by: hervyll.kang	Date Changed: Monday, April 19, 2021	Time Changed: 2:01:32 pm	QA CHK:
REV	Drawing Number:	Page: 1	

SAMSUNG CONFIDENTIAL
THIS DOCUMENT CONTAINS CONFIDENTIAL
AND PROPRIETARY INFORMATION OF
SAMSUNG ELECTRONICS CO'S PROPERTY.
DO NOT DISCLOSE TO OR DUPLICATE FOR OTHERS
EXCEPT AS AUTHORIZED BY SAMSUNG.

PM8550VS, PM8550VE

!! CAUTION !!

Place Cin 10uF Bulk Caps at corner of PM8550VS and PM8550VE as close as possible

- **PM8550VS : VDD_S1, S3, S4, S6**
- **PM8550VE : VDD_S1, S4, S5, S8**

System Power

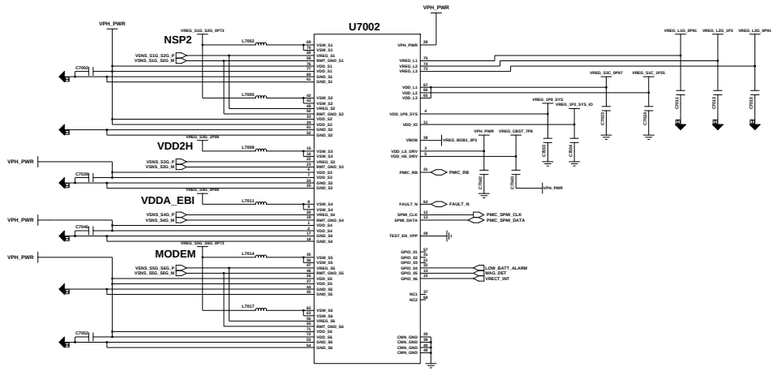

PM8550VS_G

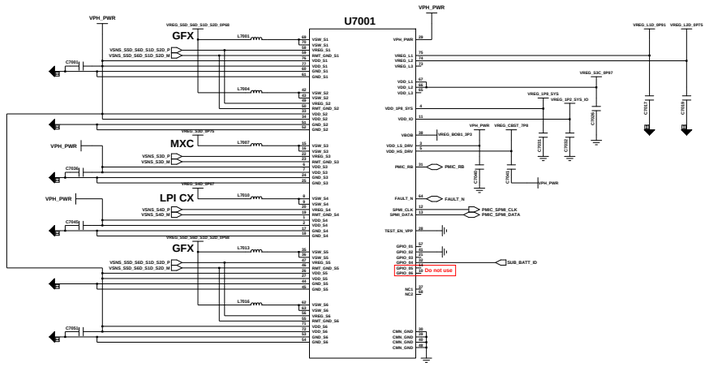

PM8550VS_D

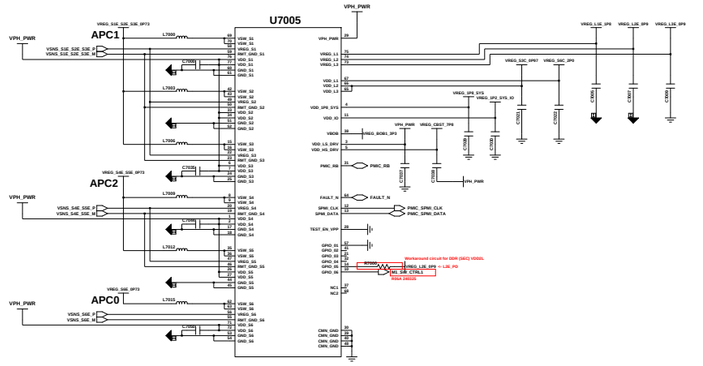

PM8550VS_E

PM8550

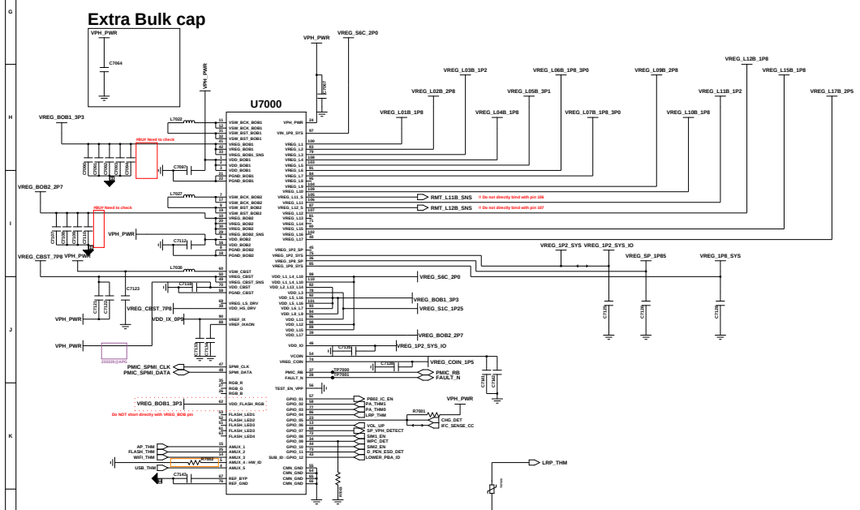

PM8550

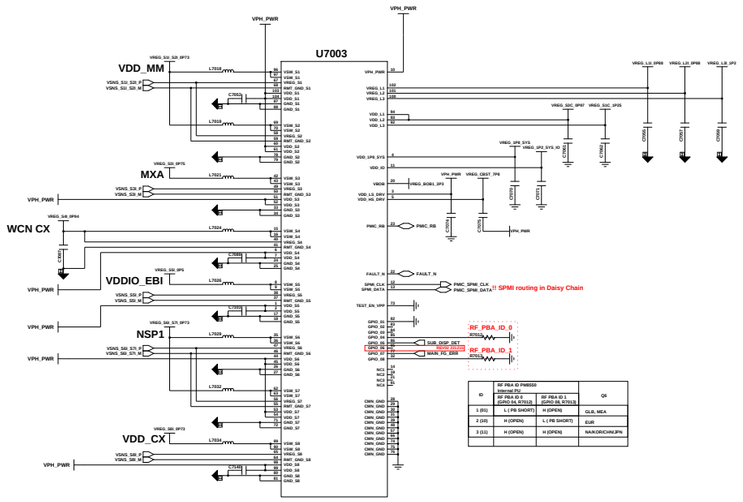

ID	RF PBA ID PM8550 Internal PU (GPIO 15 & 16)	RF PBA ID 1 (GPIO 16, 17&18)	Q6
1 (R1)	L (PB SHORT)	H (OPEN)	GLB, MEA
2 (R3)	H (OPEN)	L (PB SHORT)	EUR
3 (S1)	H (OPEN)	H (OPEN)	NAK/CHN/JPN

PM8550VE_I

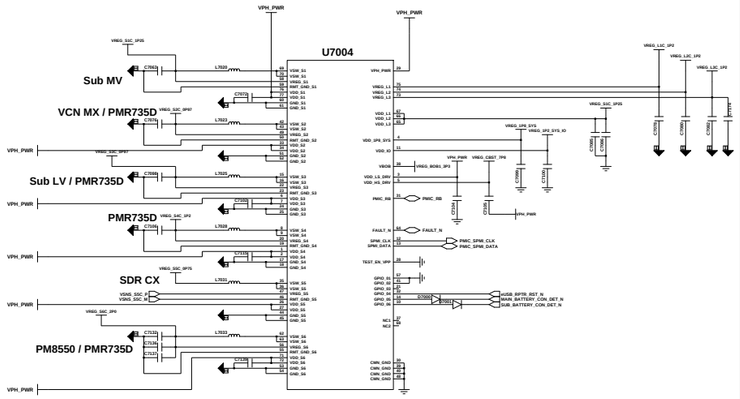

PM8550VS_C

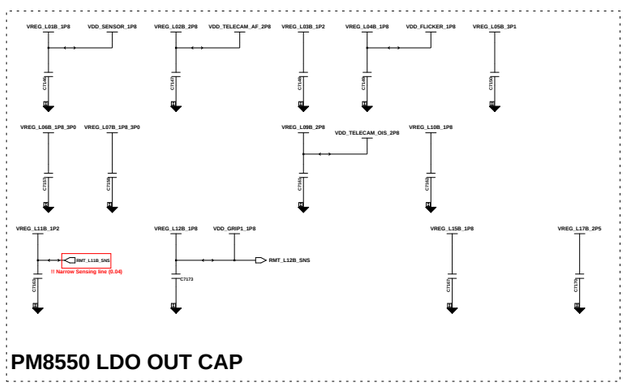

PM8550 LDO OUT CAP

H/W ID table (PM8550 AMUX_4)

HW ID	BOARD REVISION	Value	Mech
00	SM8650 SW bring-up A-Type	6.04K	
01	REV00	9.1K	
02	REV01	12.4K	
03	REV01B	18K	
04	REV02(DV1-1,1-2)	22K	
05	REV02(DV1-3~)	30K	
06	REV03	39K	
07	REV04	47K	
08	REV05	56K	
09	REV06	68K	
10	REV06A	82K	
11	REV06A(XO changed)	100K	
12		120K	
13		150K	
14		180K	
15		200K	
16		240K	
17		280K	
18		330K	
19		430K	
20		560K	
21		750K	
22		1000K	
23		1500K	
24		3000K	

PMK8650

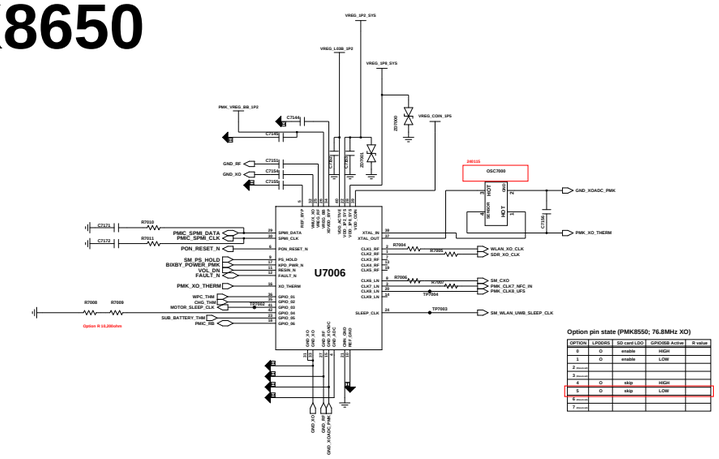

Option pin state (PMK8550; 76.8MHz XO)

OPTION	LPDDR5	SD card LDO	GPIO5B8 Active	R value
0	O	enable	HIGH	
1	O	enable	LOW	
2 reserved				
3 reserved				
4	O	skip	HIGH	
5	O	skip	LOW	
6 reserved				
7 reserved				

PMK8650

Ref#. 13nnn

Engineer:		SAMSUNG ELECTRONICS	
Project:			
Screen by:			
MD:			
R&D CHK:		TITLE: Power, Audio (1/2)	Size: 24 X 36 A
DOC CTRL CHK:			
MFG ENGR CHK:			
QA CHK:		SEC:	Drawing Number: Page: 17

Changed by: Ko Chin | Date Changed: Tuesday, November 28, 2023 | Time Changed: 11:00:24 am

SAMSUNG CONFIDENTIAL
THIS DOCUMENT CONTAINS CONFIDENTIAL
PROPRIETARY INFORMATION THAT IS
SAMSUNG ELECTRONICS CO'S PROPERTY.
DO NOT DISCLOSE TO OR DUPLICATE FOR OTHERS
EXCEPT AS AUTHORIZED BY SAMSUNG.

AUDIO

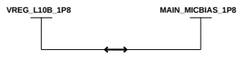

MAIN MIC BIAS

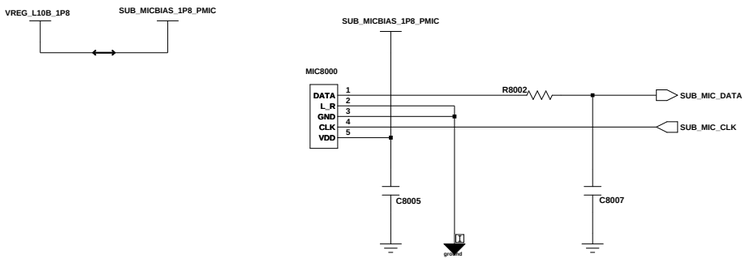

2nd MIC

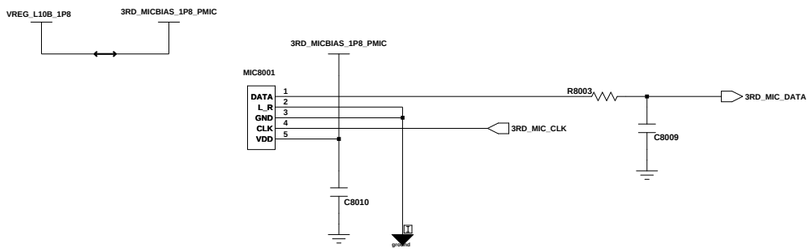

3rd MIC

AUDIO

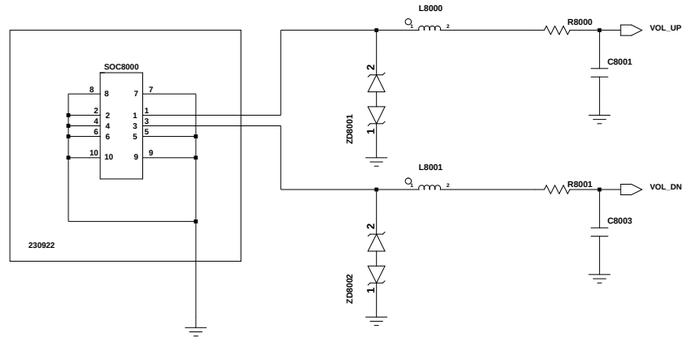

SIDE KEY (VOL)

Radiation

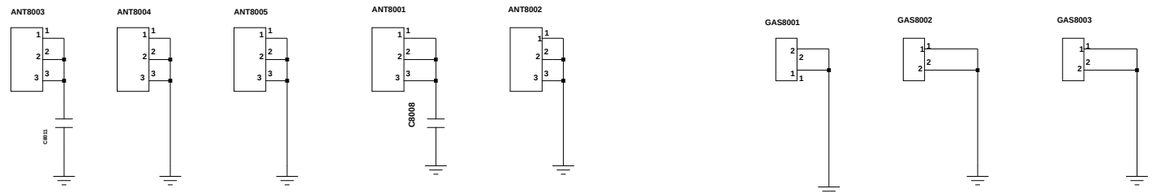

CCP

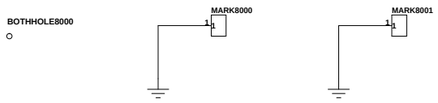

Board Screw (1.6pi)

BOSS HOLE

Engineer: SEC	SAMSUNG ELECTRONICS		
Drawn by: SEC			
R&D CHK:	TITLE: Q4_MAIN	Size: 12 1 8 A	
DOC CTRL CHK:			
MFG ENGR CHK:			
Changed by: user	Date Changed: Tuesday, April 2, 2019	Time Changed: 4:11:40 pm	QA CHK:
REV:	Drawing Number:	Page: 8	

SAMSUNG CONFIDENTIAL
THIS DOCUMENT CONTAINS CONFIDENTIAL
PROPRIETARY INFORMATION THAT IS
SAMSUNG ELECTRONICS CO'S PROPERTY.
DO NOT DISCLOSE TO OR DUPLICATE FOR OTHERS
EXCEPT AS AUTHORIZED BY SAMSUNG.

Visual CAMERA

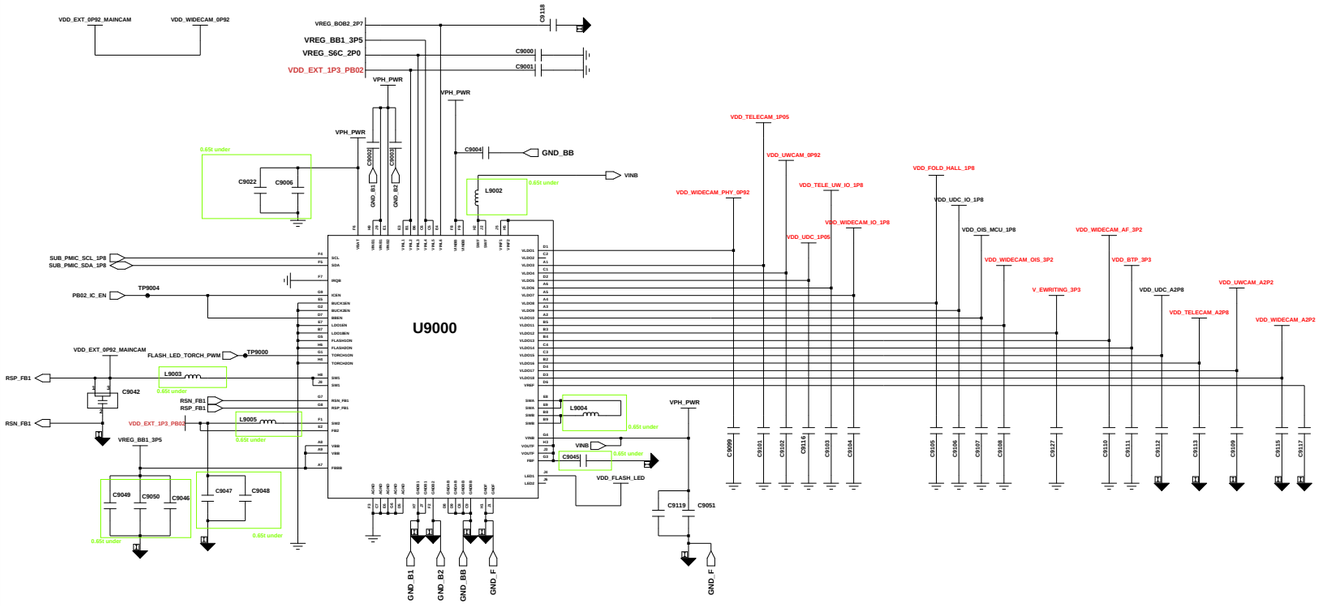

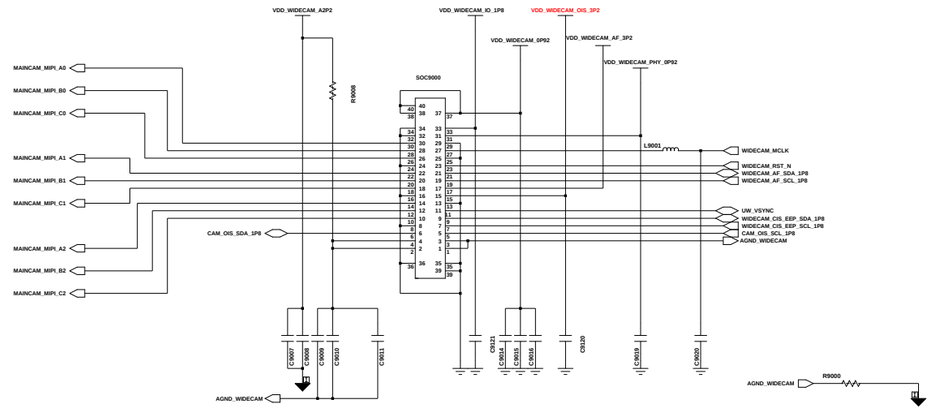

Wide CAM

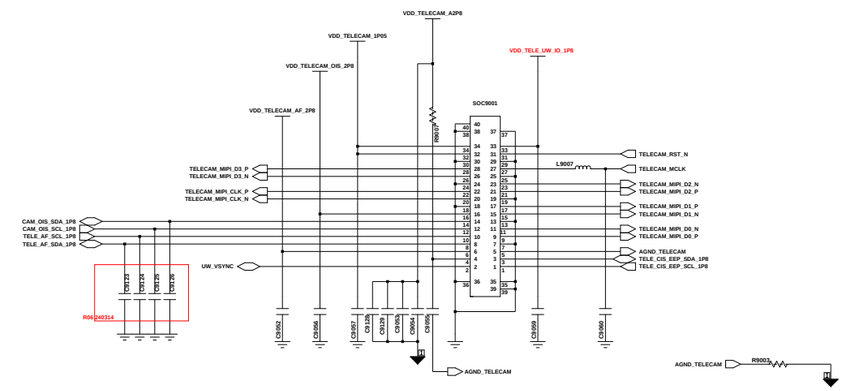

Tele CAM

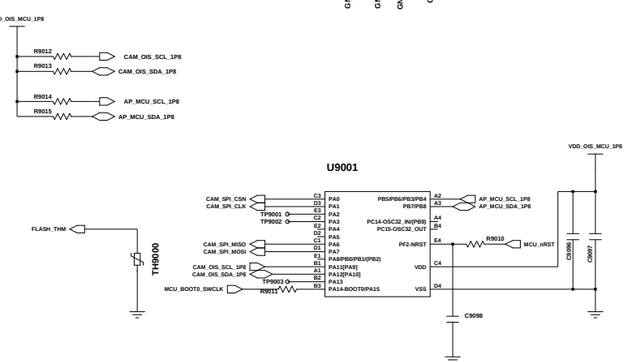

CAM MCU

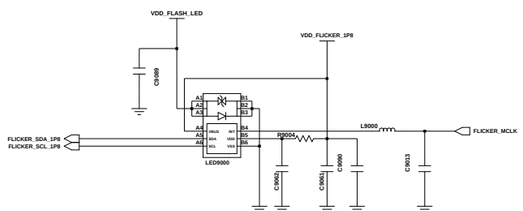

Flash LED

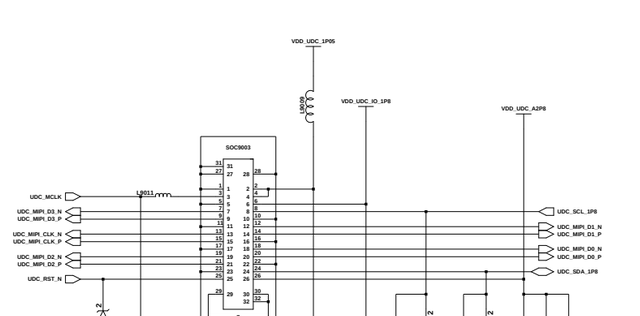

FRONT CAM (UDC)

ULTRA WIDE CAM

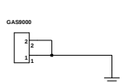

CAM DECO Contact

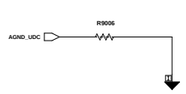

ENGINEER:	CAMERA, DISPLAY, MHL
DRAWN BY:	
R&D CHK:	TITLE: Q4_MAIN
DOC CTRL CHK:	SIZE:
MFG ENGR CHK:	

CHANGED BY:	DATE CHANGED:	TIME CHANGED:	QA CHK:	REV	DRAWING NUMBER:	PAGE: 9

SAMSUNG CONFIDENTIAL
THIS DOCUMENT CONTAINS CONFIDENTIAL
PROPRIETARY INFORMATION THAT IS
SAMSUNG ELECTRONICS CO'S PROPERTY.
DO NOT DISCLOSE TO OR DUPLICATE FOR OTHERS
EXCEPT AS AUTHORIZED BY SAMSUNG.

C2C (Conn to Conn FPCB)

System

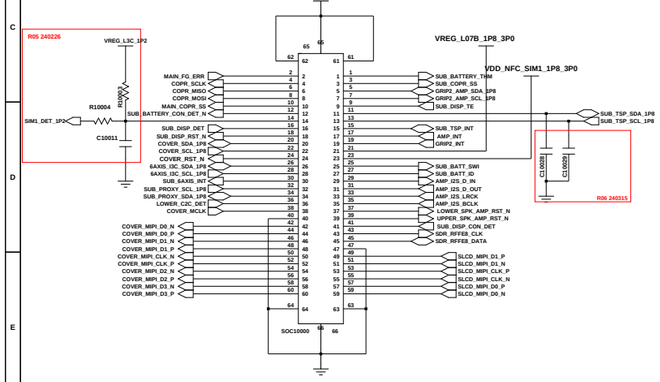

MAIN TO SUB LOWER

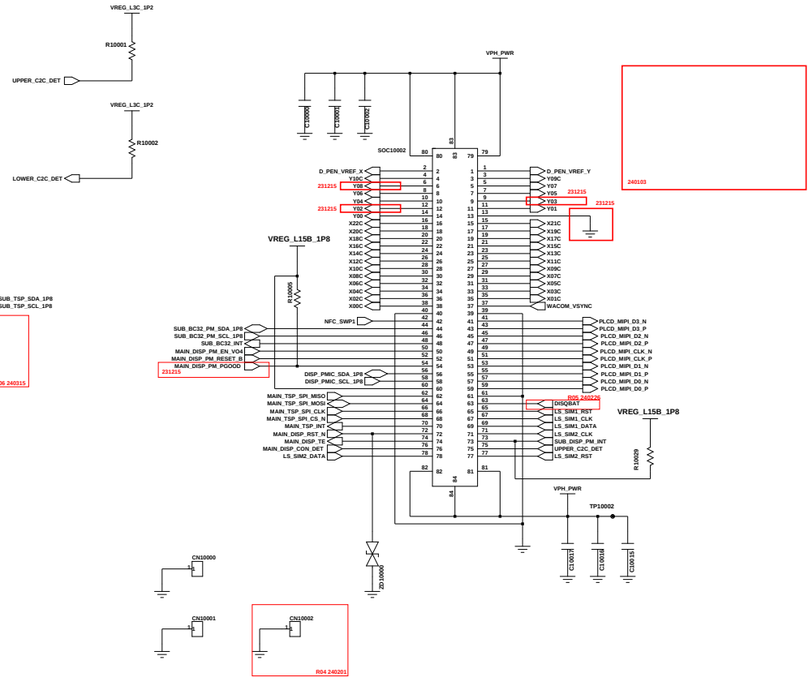

MAIN TO SUB UPPER

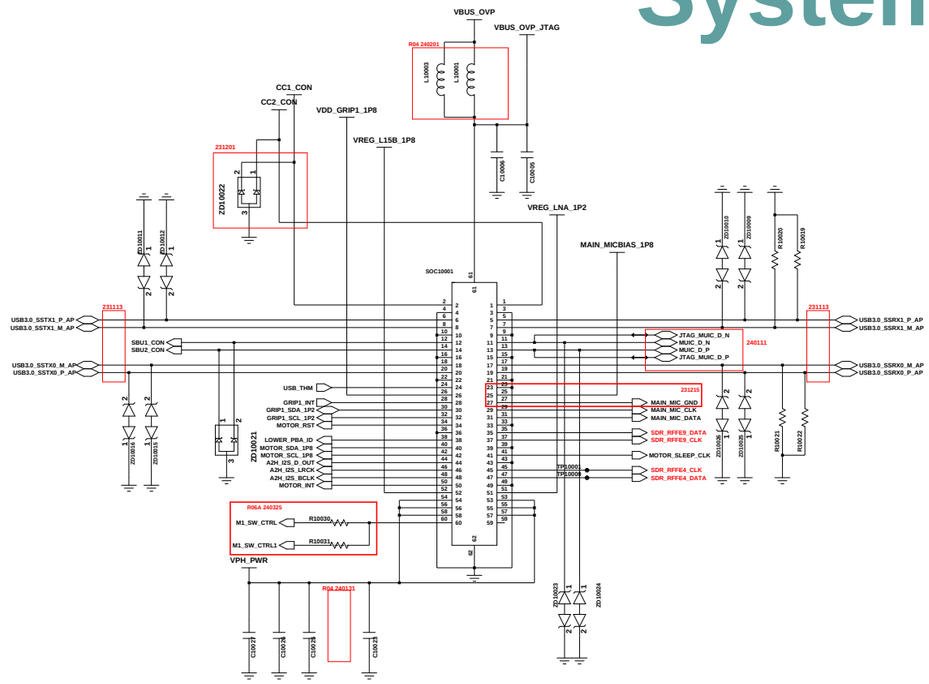

USB PCB Connector

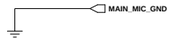

Extra PCB

BTP

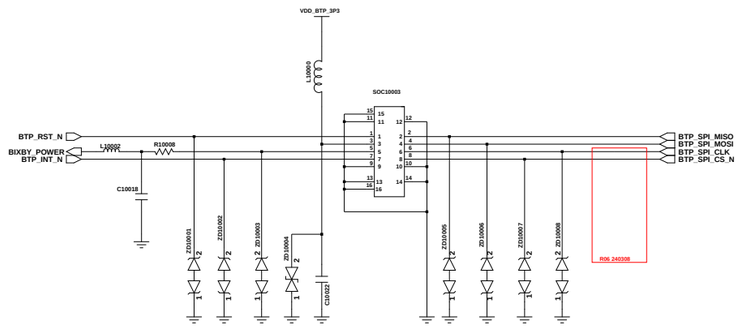

Conn Eject mark

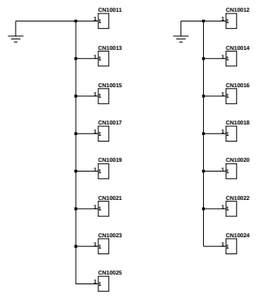

Engineer: user20	SAMSUNG ELECTRONICS		
Drawn by: user20			
R&D CHK:	TITLE: Q4_MAIN	Size:	
DOC CTRL CHK:			
MFG ENGR CHK:			
Changed by: user20	Date Changed: Thursday, June 18, 2015	Time Changed: 10:10:28 am	QA CHK:
REV	Drawing Number:	Page: 1	

SAMSUNG CONFIDENTIAL
THIS DOCUMENT CONTAINS CONFIDENTIAL
PROPRIETARY INFORMATION THAT IS
SAMSUNG ELECTRONICS CO'S PROPERTY.
DO NOT DISCLOSE TO OR DUPLICATE FOR OTHERS
EXCEPT AS AUTHORIZED BY SAMSUNG.

Visual

DIGITIZER

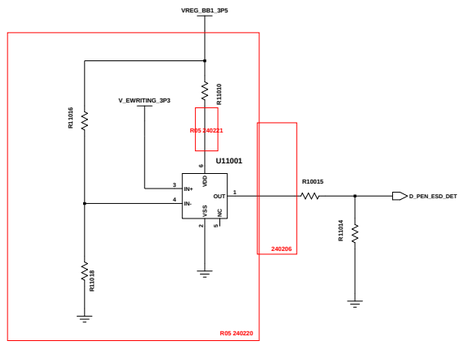

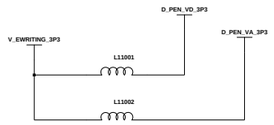

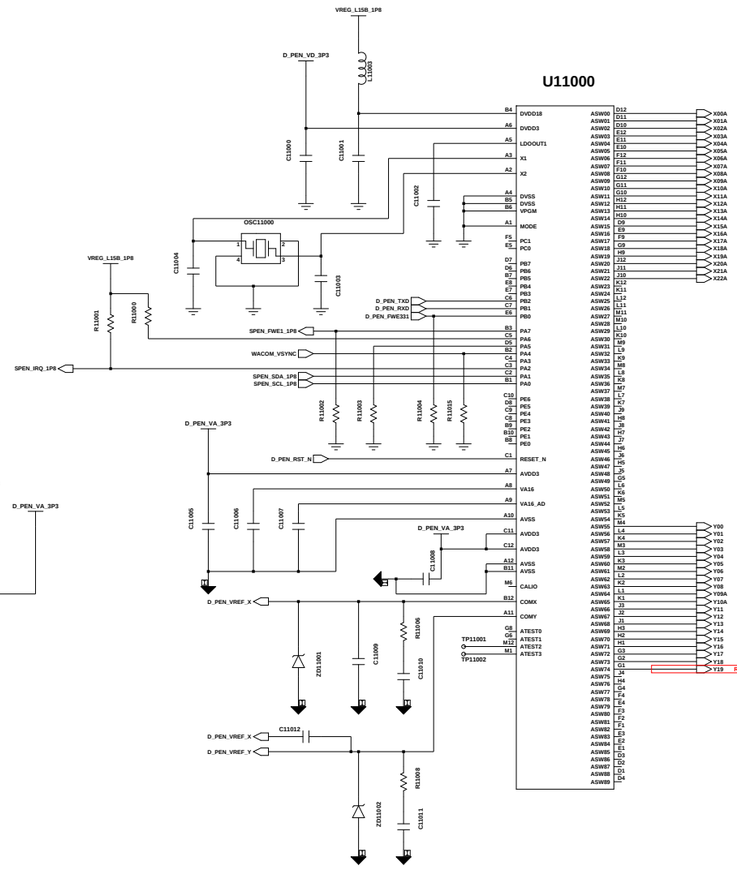

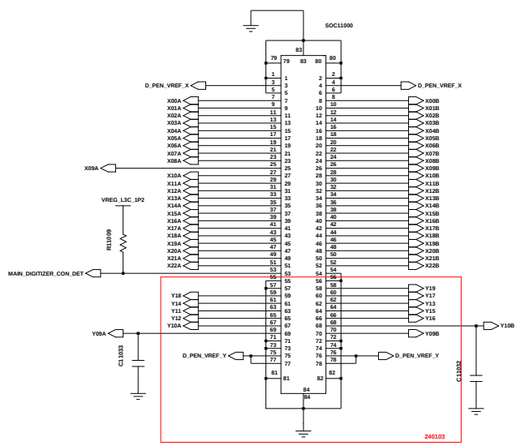

MAIN DIGITIZER Conn

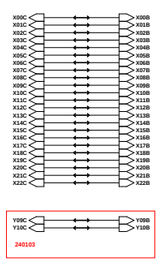

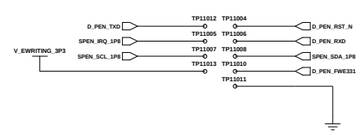

DIGITIZER TP

Engineer: user20	SAMSUNG ELECTRONICS		
Drawn by: user20			
R&D CHK:	TITLE: Q4_MAIN	Size:	
DOC CTRL CHK:			
MFG ENGR CHK:			
Changed by: user20	Date Changed: Thursday, June 18, 2015	Time Changed: 10:18:28 am	QA CHK:
REV	Drawing Number:	Page: 1	

SAMSUNG CONFIDENTIAL
THIS DOCUMENT CONTAINS CONFIDENTIAL
AND PROPRIETARY INFORMATION OF
SAMSUNG ELECTRONICS CO'S PROPERTY.
DO NOT DISCLOSE TO OR DUPLICATE FOR OTHERS
EXCEPT AS AUTHORIZED BY SAMSUNG.

Connectivity

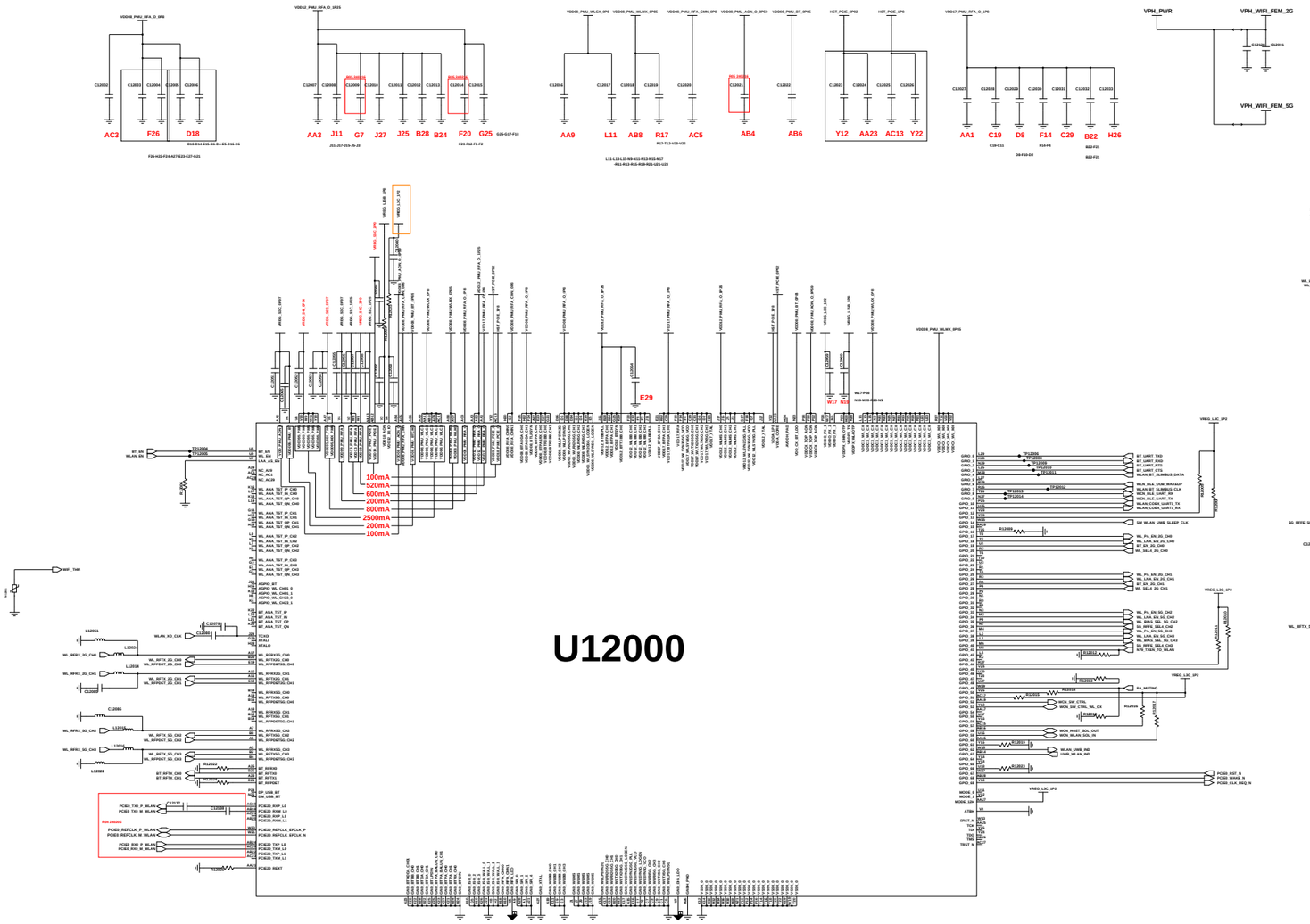

WIFI (WCN7851 CoB)

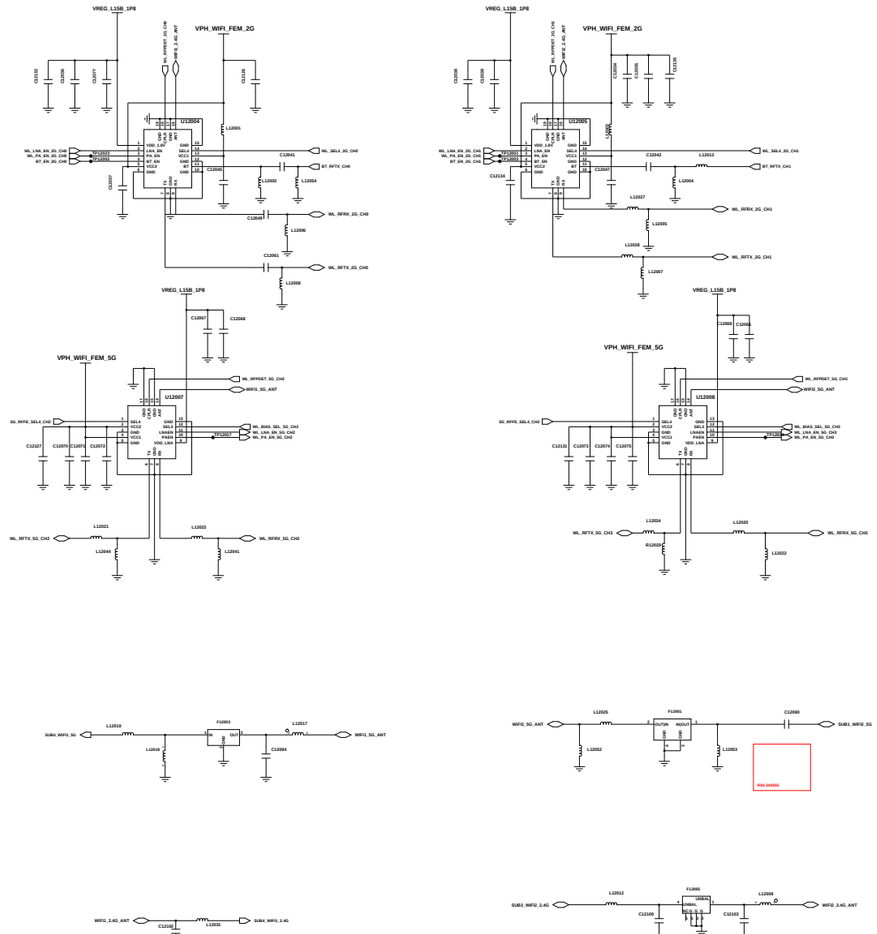

UWB

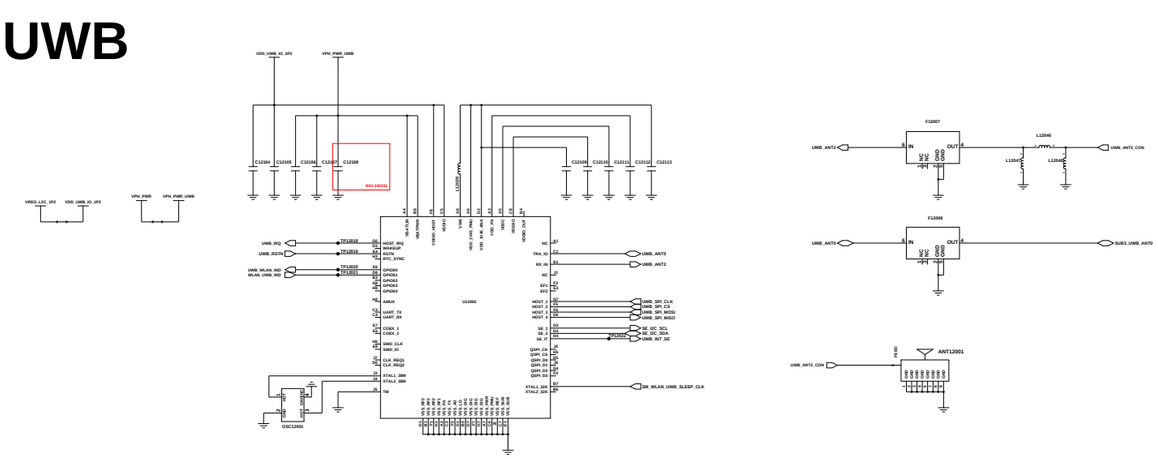

GPS_L1(for SUB4 opt)

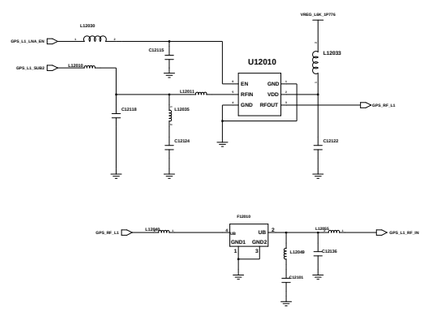

GPS_L5

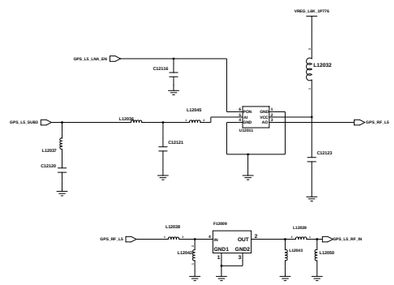

Ref#. 26nnn

Engineer: SEC	SAMSUNG ELECTRONICS
Screen by: SEC	
PMD CTRL:	TITLE: RF (3/3)
DOC CTRL CHK:	
MFG ENGR CHK:	
QA CHK:	REV: Drawing Number: Page: 26

Changed by: Date Changed: Time Changed:

SAMSUNG CONFIDENTIAL
THIS DOCUMENT CONTAINS CONFIDENTIAL
PROPRIETARY INFORMATION THAT IS
SAMSUNG ELECTRONICS CO'S PROPERTY.
DO NOT DISCLOSE TO OR DUPLICATE FOR OTHERS
EXCEPT AS AUTHORIZED BY SAMSUNG.

Q6BE_SUB_REV06A

SM-F956D

2024.04.17

sheet01 : Display PMIC, Sub PMIC, CONNETORS

sheet02 : SPK AMP, RCV AMP, DIGITIZER

Engineer:							
Drawn by:							
R&D CHK:				TITLE:			Size:
DOC CTRL CHK:							
MFG ENGR CHK:							
Changed by:	Date Changed:	Time Changed:	QA CHK:	REV:	Drawing Number:		Page:

SAMSUNG CONFIDENTIAL
THIS DOCUMENT CONTAINS CONFIDENTIAL
PROPRIETARY INFORMATION THAT IS
SAMSUNG ELECTRONICS PROPERTY.
DO NOT DISCLOSE TO OR DUPLICATE FOR OTHERS
EXCEPT AS AUTHORIZED BY SAMSUNG.

C2C (Conn to Conn FPCB)

SYSTEM TG

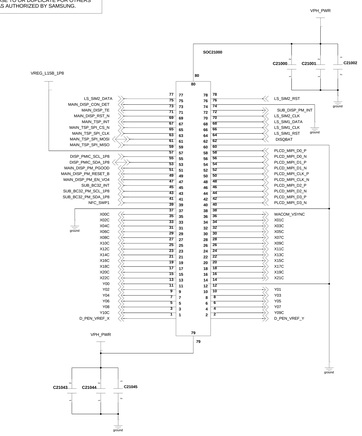

UPPER C2C FPCB(78PIN)

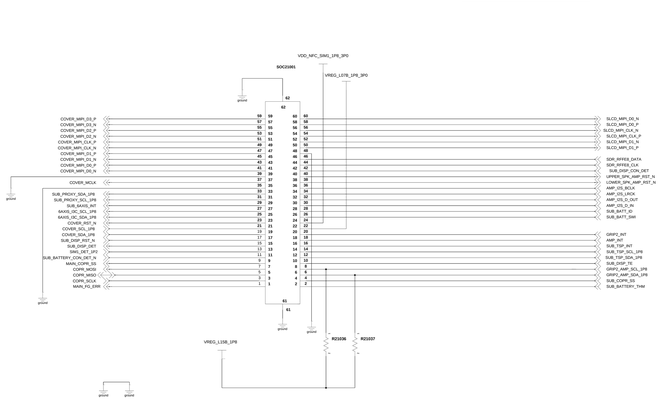

LOWER C2C FPCB(60PIN)

VISUAL TG

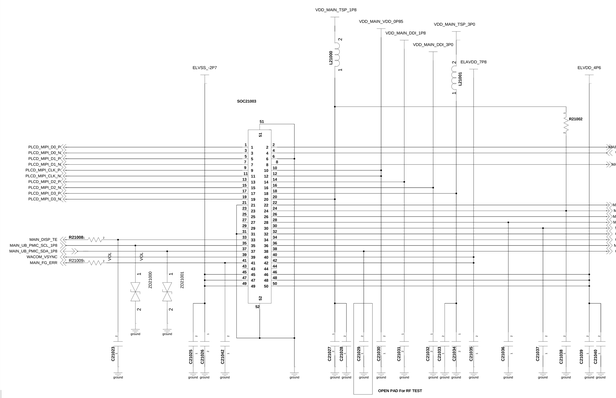

MAIN DISP. CONN(50PIN)

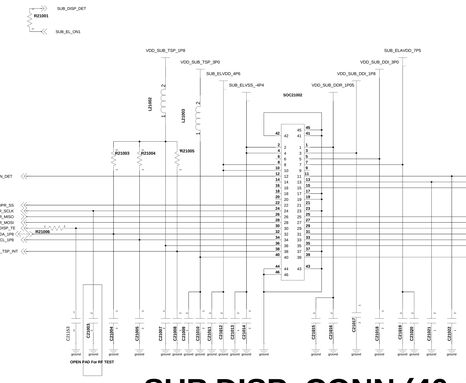

SUB DISP. CONN (40pin)

SYSTEM TG

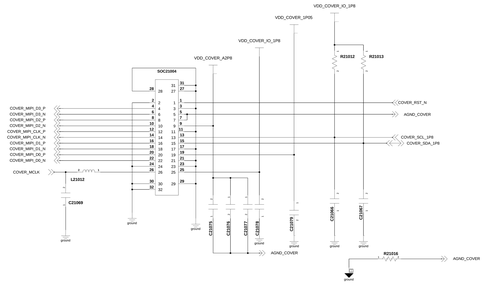

Cover VT CAM

POWER TG

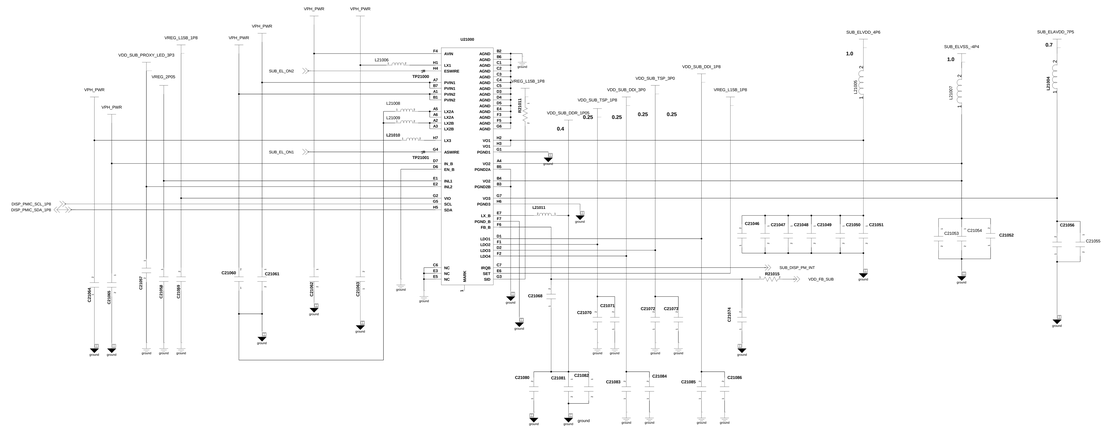

SUB DISPLAY PMIC (SM3080)

POWER TG

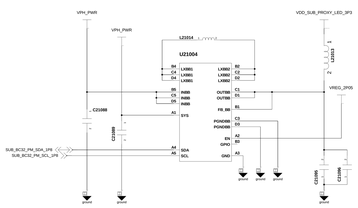

SUB_BUBKBOOST_3P3

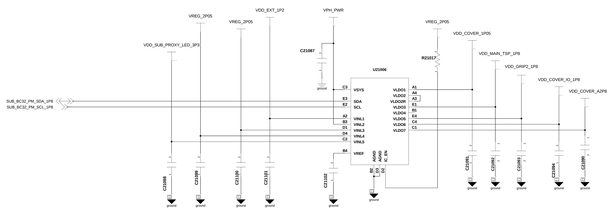

SUB PMIC (PB03) CAM POWER

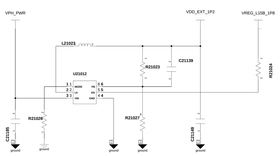

SUB_DCDC_1P3

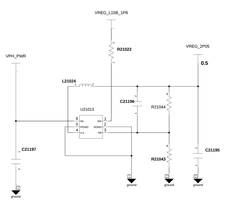

SUB_DCDC_2P05

POWER TG

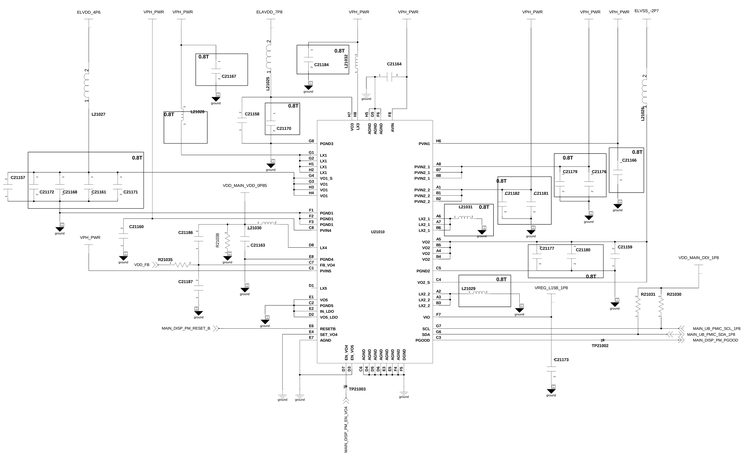

MAIN DISPLAY PMIC (SM3011)

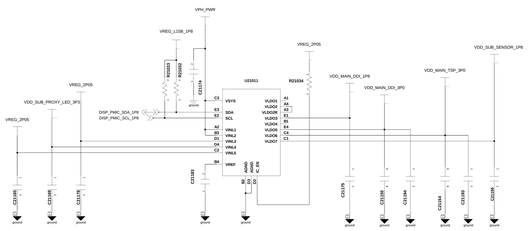

MAIN DISPLAY PMIC (PB03)

Engineer:					SAMSUNG ELECTRONICS
Drawn by:					
R&D CHK:					TITLE:
DOC CTRL CHK:					
MFG ENGR CHK:					
QA CHK:	Changed by:	Date Changed:	Time Changed:	REV:	Drawing Number: Page:

SAMSUNG CONFIDENTIAL
THIS DOCUMENT CONTAINS CONFIDENTIAL
PROPRIETARY INFORMATION THAT IS
SAMSUNG ELECTRONICS CO'S PROPERTY.
DO NOT DISCLOSE TO THIRD PARTIES FOR OTHERS
EXCEPT AS AUTHORIZED BY SAMSUNG.

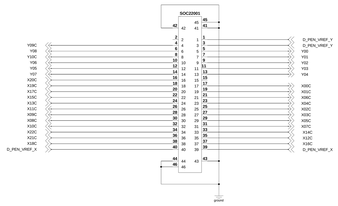

DIGITIZER FPCB(40PIN)

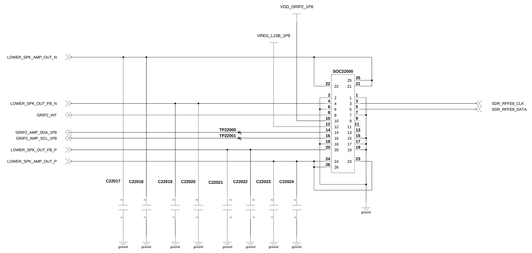

SPK+GRIP+X-GND FPCB(20PIN)

AUDIO TG

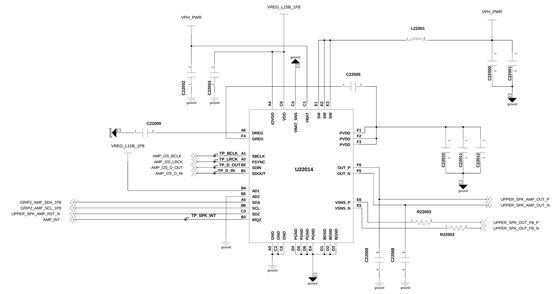

UPPER_SPK AMP

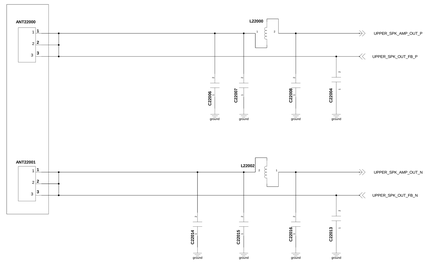

UPPER_SPK CONTACT

SYSTEM TG

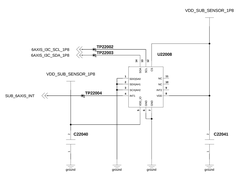

6AXIS SENSOR

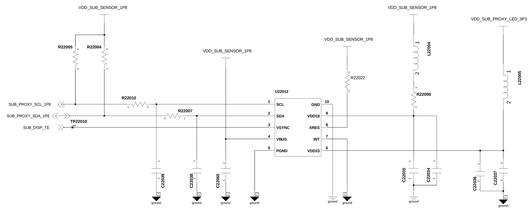

SUB Proximeter/Ambient Light Sensor

AUDIO TG

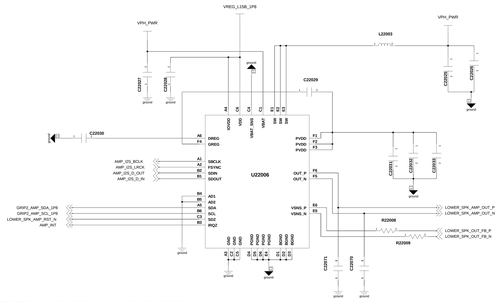

LOWER_SPK AMP

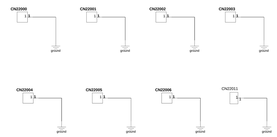

POWER TG

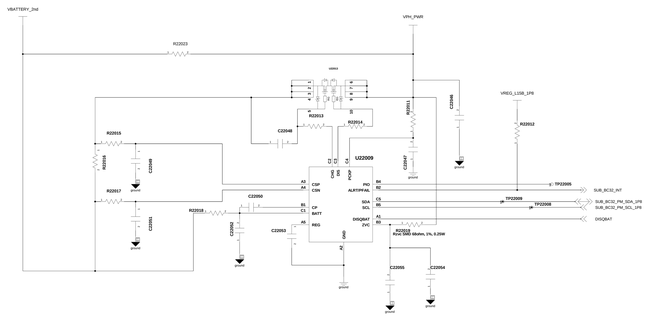

SUB BATTERY BC32

SYSTEM TG

221006 - SIM TRAY

SIM1	SIM2
PCB INNER	PCB OUTER

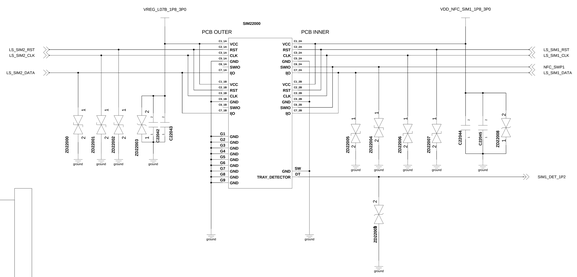

Dual SIM Socket CONN

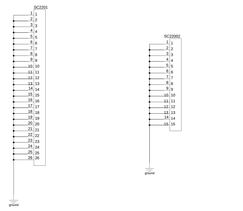

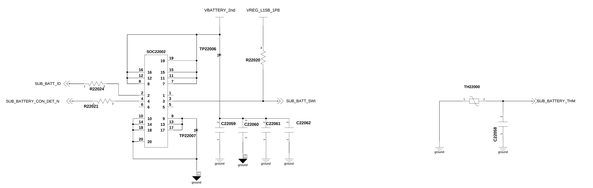

Battery Connector

BATTERY_THM

RF

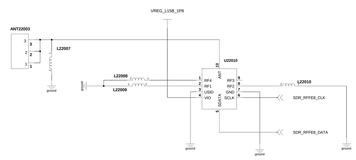

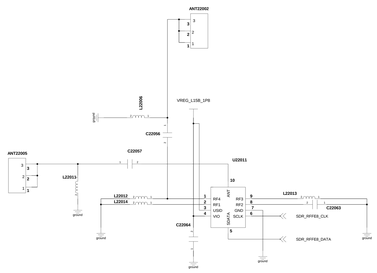

X-GND_ANT R

CCP

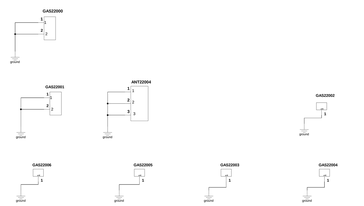

Engineer:	SAMSUNG ELECTRONICS		
Drawn by:			
R&D CHK:	TITLE:		Size:
DOC CTRL CHK:			
MFG ENGR CHK:			
QA CHK:	REV:	Drawing Number:	Page:

Changed by:	Date Changed:	Time Changed:

Q6/BE_Main Lower_PCB

REV0.6 GLB

SM-F9560

2024.04.09 BOM

TITLE	Q6_Main_Lower_PCB
SIZE A1	DWG NO PDM NUMBER	REV Rev
DRAWN BY User Name	SHEET TITLE 2	DATE Drawing Date

ADC RANGE	TIPICAL VALUE	ID	EXT_PU	EXT_PD	Q6
0 - 300	0	8	NC	332K,1%	EUR_SUB6 Global_SUB6 KOR_SUB6
301 - 600	480	0	332K,1%	120K,1%	NA_mmW NA_CAN_SUB6
601 - 900	720	4	270K,1%	180K,1%	CHN_SUB6 JPN_mmW
901 - 1200	1080	5	180K,1%	270K,1%	
1201 - 1400	1320	6	120K,1%	332K,1%	
1401 - 1530	1480	7	100K,1%	470K,1%	
1531 - 1800	1800	1	332K,1%	NC	

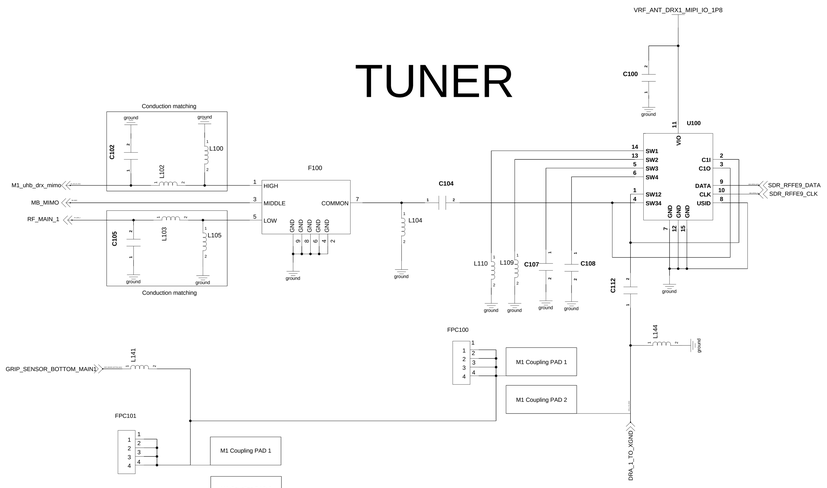

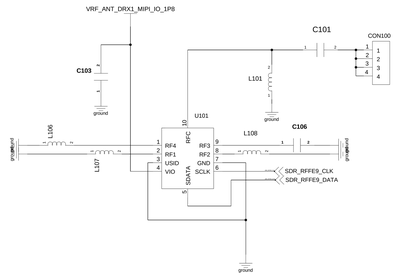

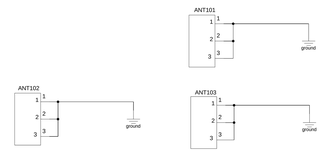

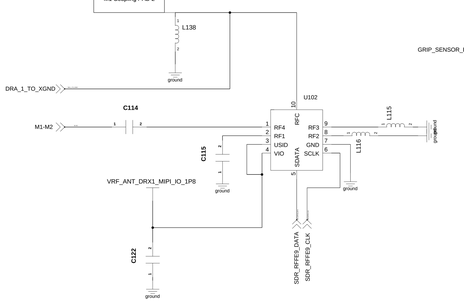

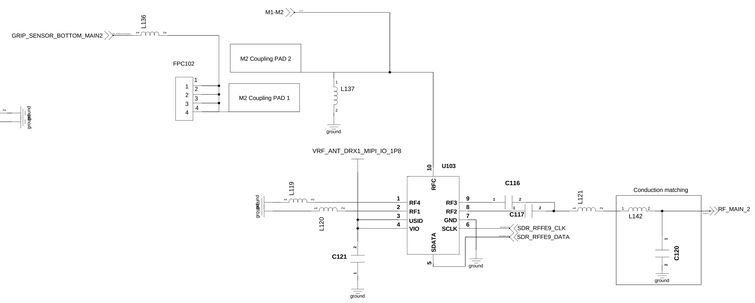

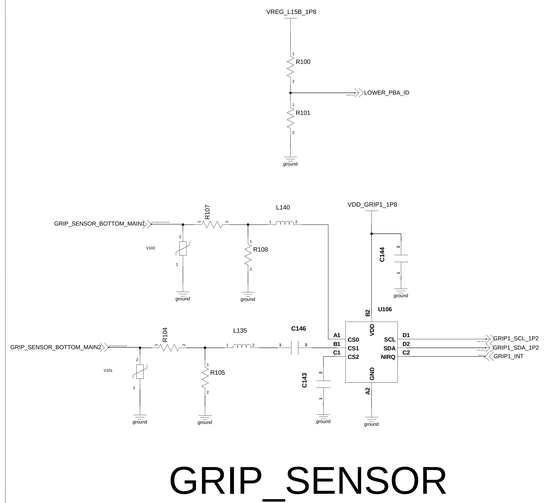

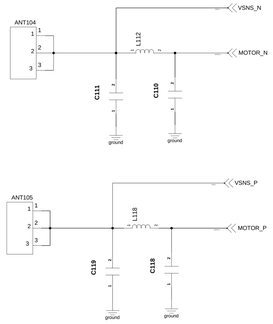

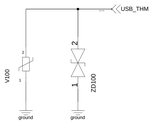

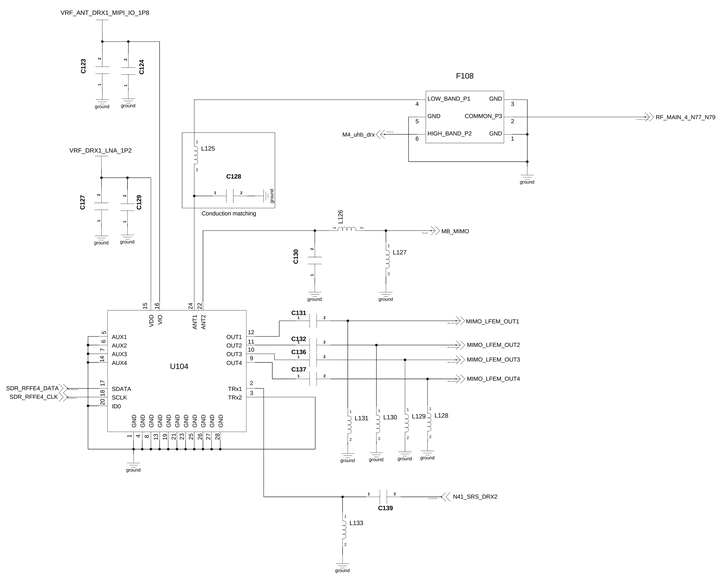

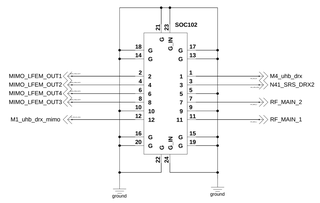

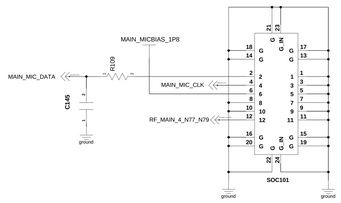

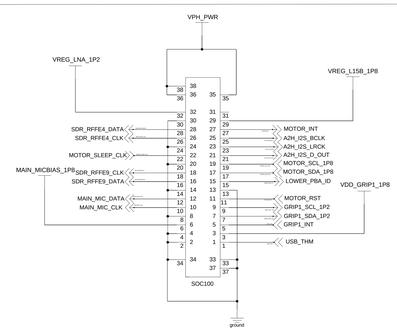

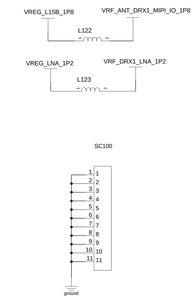

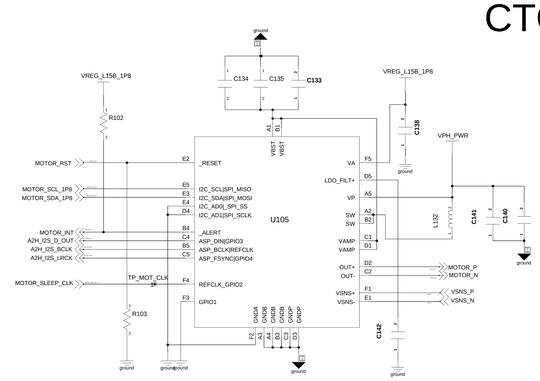

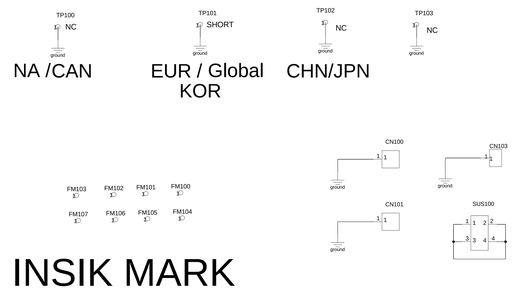

TITLE	Q6_Main_Lower_PCB
SIZE A1	DWG NO PDM NUMBER Rev
SHEET RF_LOGIC2	Drawing Date
DRAWN BY User Name	