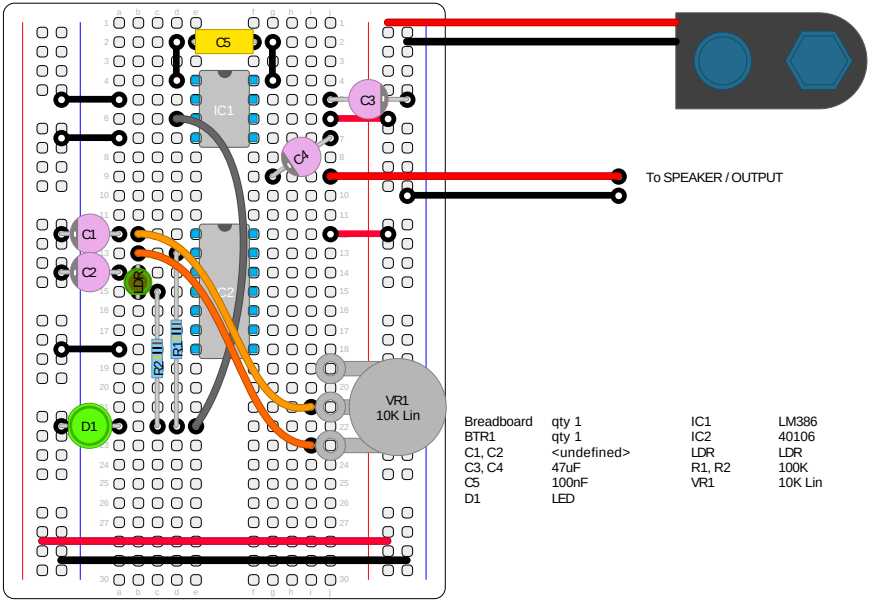

Breadboard	qty 1	IC1	LM386
BTR1	qty 1	IC2	40106
C1, C2	<undefined>	LDR	LDR
C3, C4	47uF	R1, R2	100K
C5	100nF	VR1	10K Lin
D1	LED		