EMMG MIDI Workshop 2024

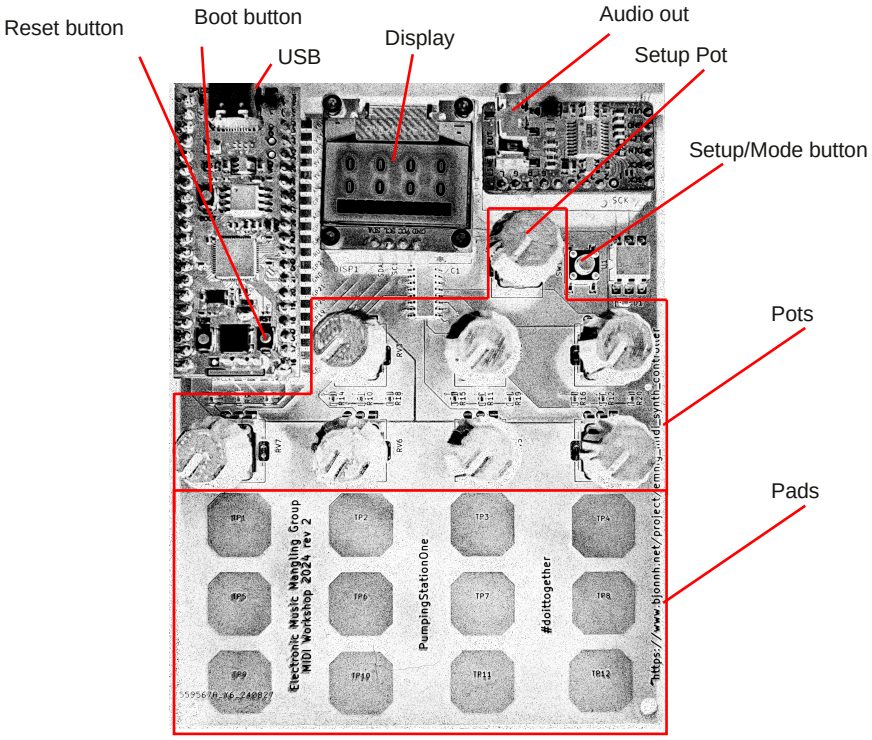

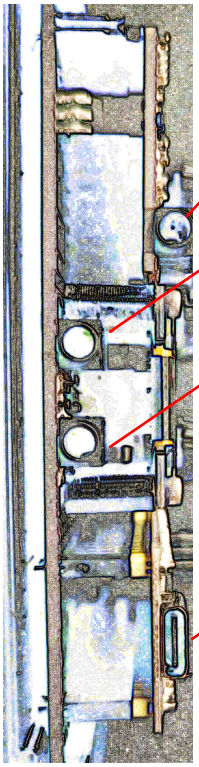

Controller mode (default boot mode)

In this mode, the device outputs both by USB-MIDI and MIDI-OUT the position of the pots (CC) and the pads status (Note or CC). Pads can also be latching, meaning they will stay in the position until you press them again.

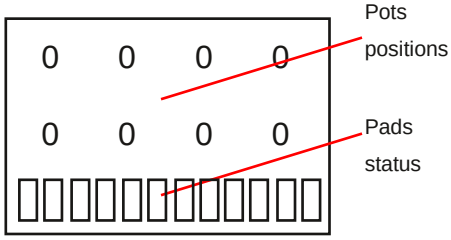

Default screen

To configure, press the Setup button. Select one of the setup page with the Control Pot, validate by pressing Setup button again.

```
< Back : Go to default screen   ; Controller : Pots setup
Pad    : Pads setup             ; Load       : Load preset from memory
Save   : Save preset to memory  ; PANIC!     : Send MIDI Panic
```

Pots setup

Pick Pot to configure with Setup Pot.

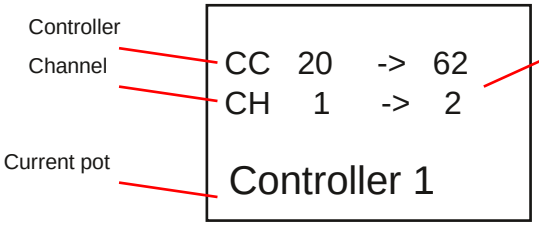

Current values that can be set with Pot 2 (CC) and Pot 3 (CH). Press Setup button to confirm.

Pads setup

Pick Pot to configure with Setup Pot.

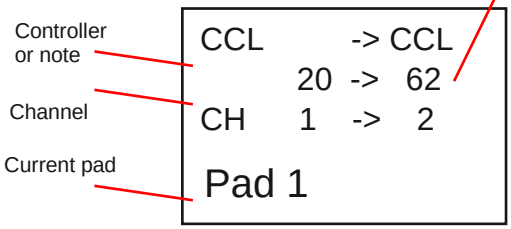

Current values that can be set with Pot 2 (CC or Note value) and Pot 3 (CH). Pot 4 chooses between:
Note, CC and CCL (latched CC).

Press Setup button to confirm.

To exit setup, turn setup pot all the way right for < Back and click Setup button

Synthesizer mode (https://github.com/risgk/digital-synth-pra32-u)

This mode can be reached by pressing the Setup button and reseting the device or plug it in when it was off.

Presets can be changed by pressing Setup button and using the Setup pot.

Parameters pages are changed by turning the Setup pot and the values are changed by rotating the other pots. The pots are in catch mode, meaning you need to reach the current value before the pot has any action..
The device reacts to USB-MIDI in and MIDI in as well as the pads.

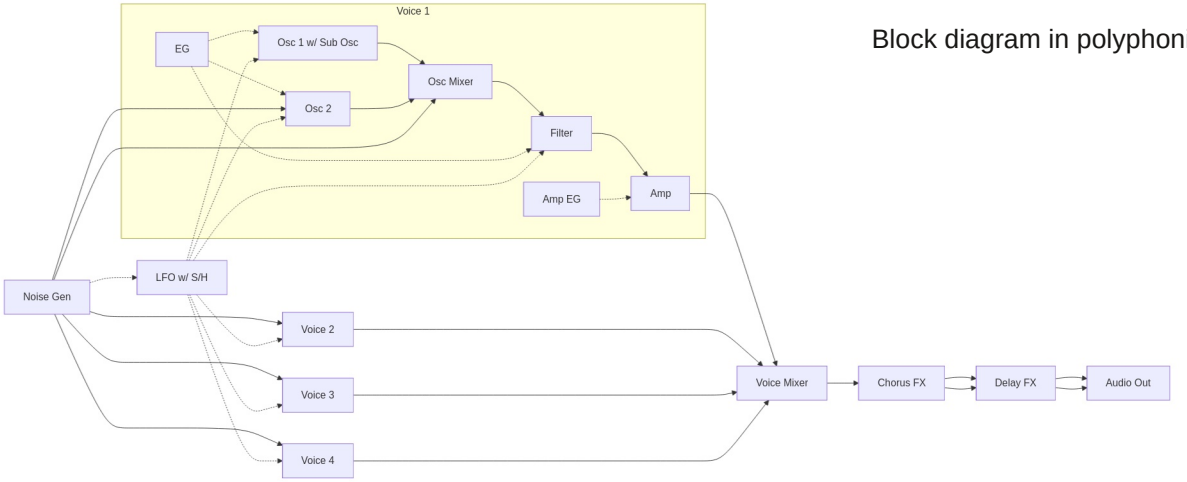

Block diagram in polyphonic mode

Page 1 Oscillators

O1W: Osc 1 Wave [Saw|Sin|-|Tri|-|Pls]
O1S: Osc 1 Shape (only for Pls)
O1M: Osc 1 Morph

Page 2 Envelope

FEG: Filter EG Amt
EOA: EG Osc Amt
EOD: EG Osc Dst [Osc 1&2 Pitch, OSC 2 Pitch, Osc 1 Shape]

Page 3 LFO

LOA: LFO Osc Amt
LOD: LFO Osc Dst [Osc 1&2 Pitch, OSC 2 Pitch, Osc 1 Shape]
LFA: LFO Filter Amt

Page 4 Amp

AG: Amp Gain
EAM: EG Amp Mod [Off|On]
BAM: Breath Amp Mod [Off|Quad|Linear]

Page 5 Chorus/Delay

CMX: Chorus Mix [Dry|Wet]
CRT: Chorus Rate
CDP: Chorus Depth

Page 6 Filters/Breath

FKT: Filter Key Track [0.0|0.5|1.0]
FCO: Filter Cut off
FRE: Filter Resonance

Page 7 Others

MXN: Mixer Noise/sub
RDC: Release=Decay [Off|On]
PBR: Pitch Bend Range

MXO: Mixer Noise/Sub Osc
O2W: Osc 2 Wave [Saw|Sin|-|Tri|Nos|Sqr]
O2C: Osc 2 Coarse
O2P: Osc 2 Pitch

EGA: EG Attack
EGD: EG Decay
EGS: EG Sustain
EGR: EG Release

LFW: LFO Wave [Tri|Sin|-|Saw|SH|Sqr]
LFR: LFO Rate
LFD: LFO Depth
LFF: LFO Fade Time

AMA: Amp Attack
AMD: Amp Decay
AMS: Amp Sustain
AMR: Amp Release

DFB: Delay feedback
DTM: Delay Time
DMD: Delay mode [Mono|Stereo]

FMO: Filter Mode [LP|HP]
BFA: Breath Filter Amount
BRH: Breath Controller

EVS: EG Velocity sensitivity
AVS: Amp Velocity sensitivity

Update mode

Press reset and continue pressing, press boot. Release reset. Wait 5 s, release boot.

The device will now appear as a USB drive on your computer and you can drop a .UF2 file to update the device.

You will be able to find the latest version at:

https://github.com/bjonnh/2024_emmg_workshop_midi

Device should restart with the new firmware. You can use this approach to upload CircuitPython.

Use the VCC-GND version: https://circuitpython.org/board/vcc_gnd_yd_rp2040/