LEICA M3

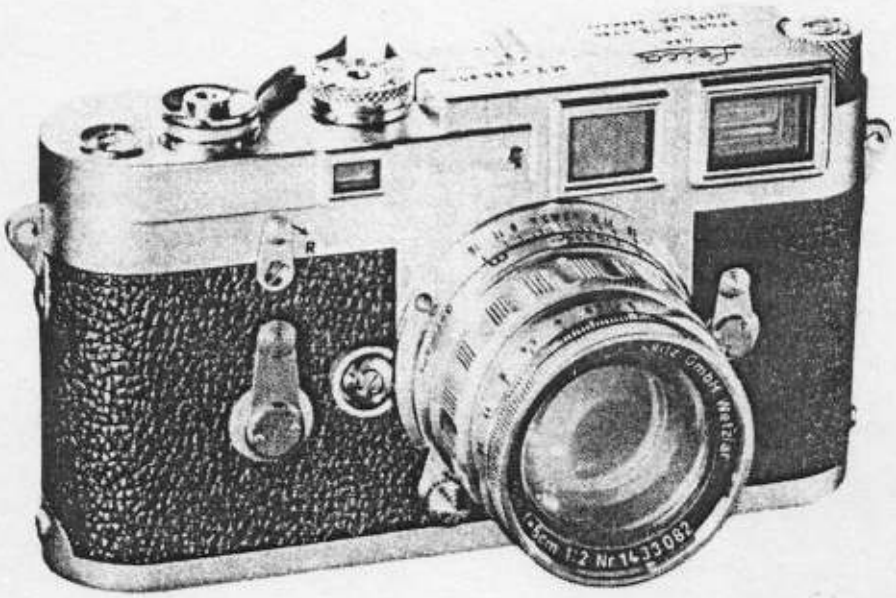

SERVICE INFORMATION

42-253/ 2.1	Leica M3-700 001...782 000	Leitz WETZLAR

Bestell-Nr Part-No	Benennung Description	Leica - Modell M3									
42-253.01- 34	Hebel lever	1									
42-253.01- 36	Schraubring screw ring	1									
42-253.01- 82	Schlitzstellknopf speed dial	1									
42-253.01-379	Rückwickelknopf rewind knob	1									
42-253.01-726	Deckkappe, kompl. mit 01-728; 01-729; 01-730; 01-746; 01-747 cover plate, compl.	1									
42-253.01-728	Fenster, linkes window, left	1									
42-253.01-729	Beleuchtungsfenster illuminating window	1									
42-253.01-730	Fenster, rechtes window, right	1									
42-253.01-731	Verschlußschraube cover screw	1									
42-253.01-746	Halteleiste, groß stop bracket, large	1									
42-253.01-747	Halteleiste, klein stop bracket, small	1									
42-253.01-777	Befestigungsklemme acc. clip	1									
42-253.01-780	Druckbacke pressure plate	1									
42-253.01-781	Druckfeder pressure spring	1									
42-253.01-786	Fassung, kompl. mit Linse mount, compl. with lens	1									
15-12.11 - 6/1	Feder spring	1									
15-10.175- 9	Schraube screw	4									
15-10.149- 7	Anschlagschraube stop screw	1									
15-10.24 - 5	Befestigungsschraube screw	4									
M1,4 x 4 DIN 63	Senkschraube C. S. screw	1									

1.10.59

Ernst Leitz GmbH Wetzlar	Leica M3-700 001...782 000	42-253/ 2.1

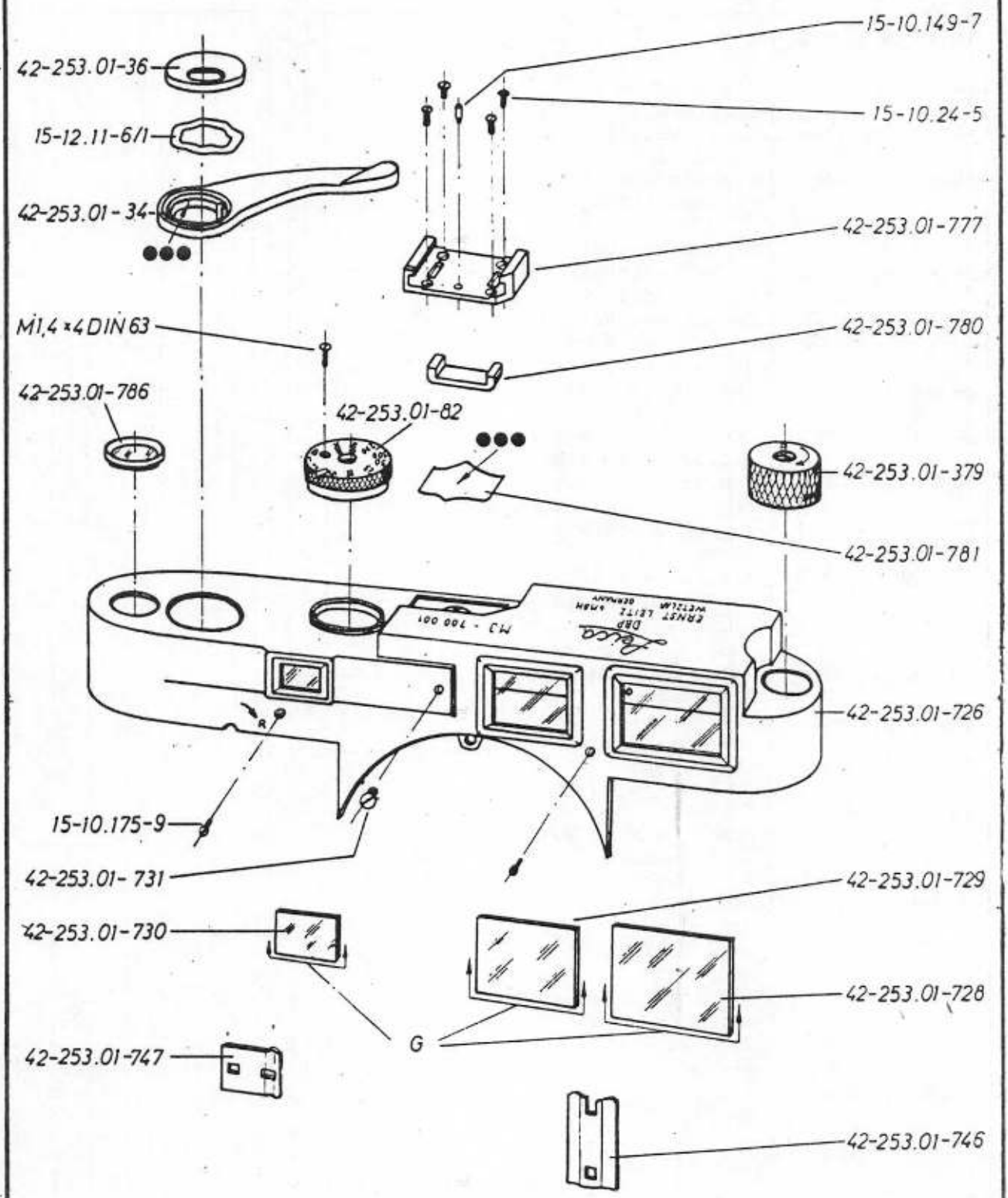

1.12.61

●●● 704
G Gießharz

Daniel D. Teoli Jr.
Archival Collection

42-253/ 2.2	Leica M3-782 001...854 000	Ernst Leitz GmbH Wetzlar

Artikel-Nr Part-No	Benennung Description	Leica - Modell M3									
42-253.01- 34	Hebel lever	1									
42-253.01- 36	Schraubring screw ring	1									
42-253.01- 82	Schlitzstellknopf speed dial	1									
42-253.01-157	Vorschraubring retaining ring	1									
42-253.01-498	Vorschraubring retaining ring	1									
42-253.01-499	Rückwickelknopf rewind knob	1									
42-253.01-725	Deckkappe, kompl. mit 01-728; 01-729; 01-730; 01-746; 01-747 cover plate, compl.	1									
42-253.01-728	Fenster, linkes window, left	1									
42-253.01-729	Beleuchtungsfenster illuminating window	1									
42-253.01-730	Fenster, rechtes window, right	1									
42-253.01-731	Verschlußschraube cover screw	1									
42-253.01-746	Halteleiste, groß stop bracket, large	1									
42-253.01-747	Halteleiste, klein stop bracket, small	1									
42-253.01-777	Befestigungsklemme acc. clip	1									
42-253.01-780	Druckbacke pressure plate	1									
42-253.01-781	Druckfeder pressure spring	1									
42-253.01-786	Fassung, kompl. mit Linse mount, compl. with lens	1									
M1,4 x 4 DIN 63	Senkschraube C. S. screw	1									
15-10.21 -11	Schraube screw	1									
15-10.149- 7	Anschlagschraube stop screw	1									
15-10.24 - 5	Befestigungsschraube screw	4									
15-12.02-17/1	Scheibe washer	1									
15-12.11- 6/1	Feder spring	1									

1.12.61

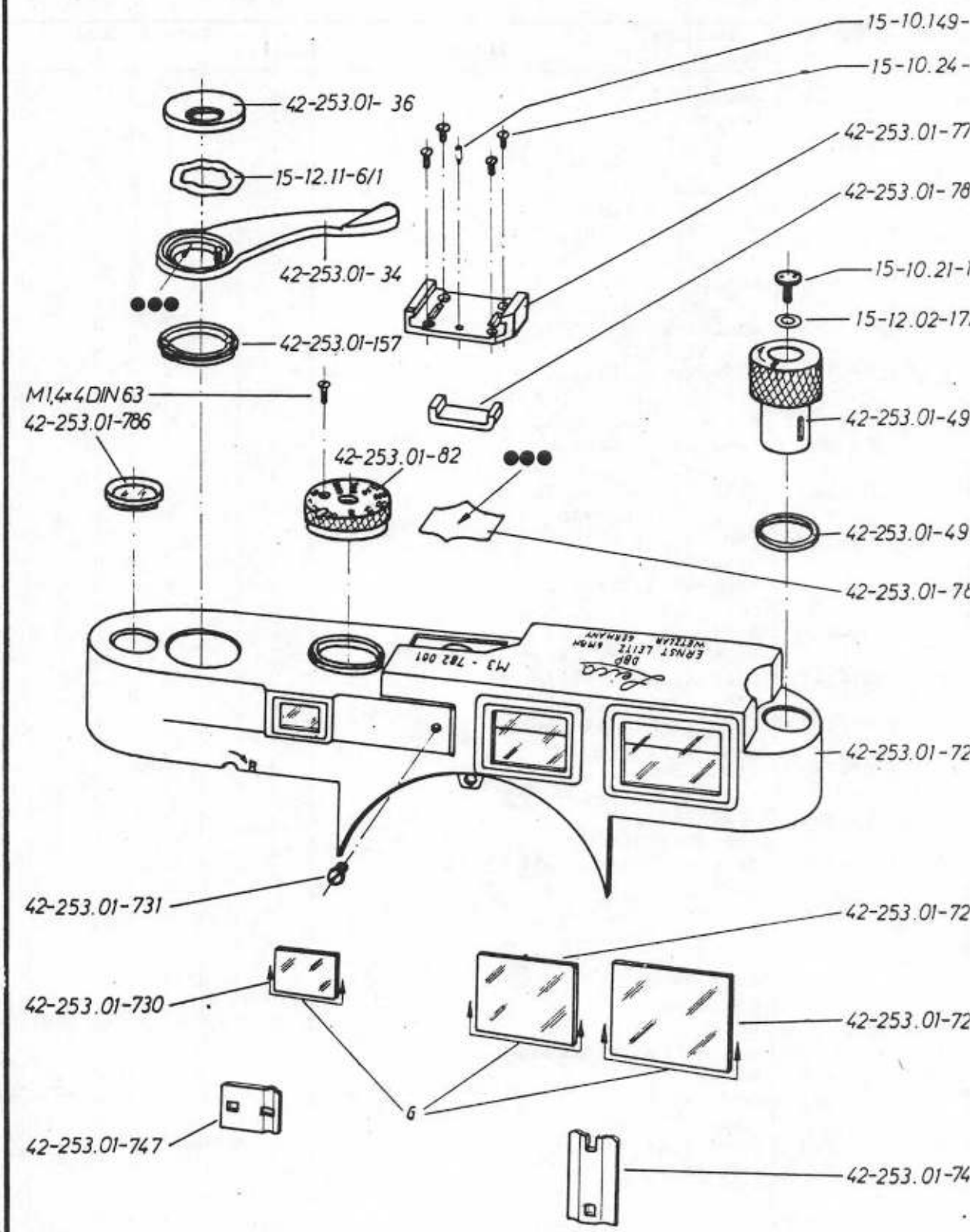

1.12.61

●●● 704
G Gießharz

42-253/2.3	Leica M3-854 001...919 250	Ernst Leitz GmbH Wetzlar

Bestell-Nr Part-No	Benennung Description	Leica - Modell M3									
42-253.01- 34	Hebel lever	1									
42-253.01- 36	Schraubring screw ring	1									
42-253.01-157	Vorschraubring retaining ring	1									
42-253.01-301	Schlitzstellknopf speed dial	1									
42-253.01-498	Vorschraubring retaining ring	1									
42-253.01-499	Rückwickelknopf rewind knob	1									
42-253.01-725	Deckkappe, kompl. mit 01-728; 01-729; 01-730: 01-746; 01-747 cover plate, compl.	1									
42-253.01-728	Fenster, linkes window, left	1									
42-253.01-729	Beleuchtungsfenster illuminating window	1									
42-253.01-730	Fenster, rechtes window, right	1									
42-253.01-731	Verschlußschraube cover screw	1									
42-253.01-746	Halteleiste, groß stop bracket, large	1									
42-253.01-747	Halteleiste, klein stop bracket, small	1									
42-253.01-777	Befestigungsklemme acc. clip	1									
42-253.01-780	Druckbacke pressure plate	1									
42-253.01-781	Druckfeder pressure spring	1									
42-253.01-786	Fassung, kompl. mit Linse mount, compl. with lens	1									
M1,4 x 4 DIN 63	Senkschraube C. S. screw	1									
15-10.149- 7	Anschlagschraube stop screw	1									
15-10.21 -11	Schraube screw	1									
15-10.24 - 5	Befestigungsschraube screw	4									
15-12.02-17/1	Scheibe washer	1									
15-12.11- 6/1	Federscheibe washer	1									

02
1.12.61

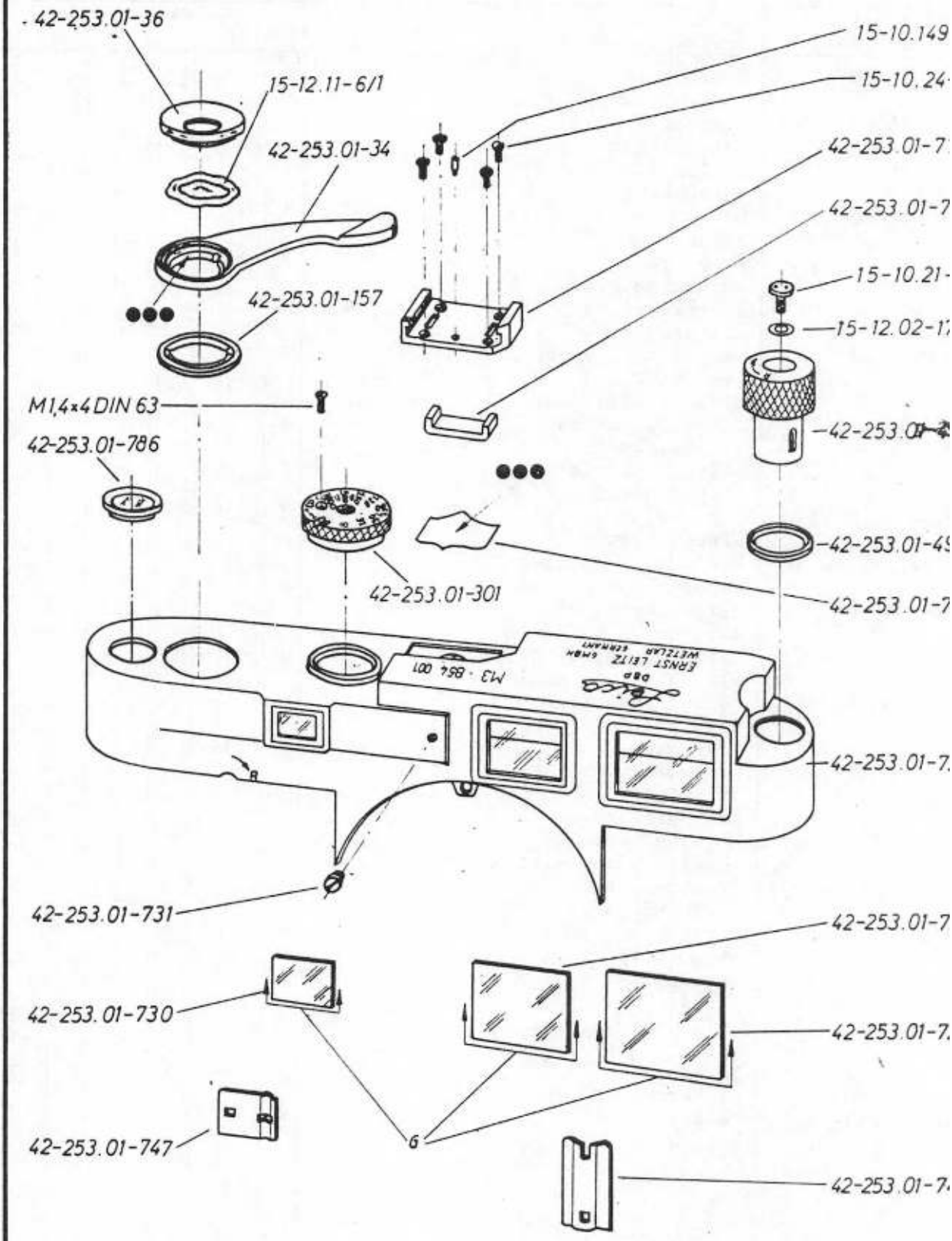

1.12.61

●●● 704
G Gießharz

Leica M3-919 251...

Ernst Leitz GmbH Wetzlar

Bestell-Nr Part-No	Benennung Description	Leica - Modell M3										
42-253.01- 36	Schraubring screw ring	1										
42-253.01-157	Vorschraubring retaining ring	1										
42-253.01-301	Schlitzstellknopf speed dial	1										
42-253.01-371	Hebel lever	1										
42-253.01-498	Vorschraubring retaining ring	1										
42-253.01-499	Rückwickelknopf rewind knob	1										
42-253.01-725	Deckkappe, kompl. mit 01-728; 01-729; 01-730; 01-746; 01-747 cover plate, compl.	1										
42-253.01-728	Fenster, linkes window, left	1										
42-253.01-729	Beleuchtungsfenster illuminating window	1										
42-253.01-730	Fenster, rechtes window, right	1										
42-253.01-731	Verschlußschraube cover screw	1										
42-253.01-746	Halteleiste, groß stop bracket, large	1										
42-253.01-747	Halteleiste, klein stop bracket, small	1										
42-253.01-777	Befestigungsklemme acc. clip	1										
42-253.01-780	Druckbacke pressure plate	1										
42-253.01-781	Druckfeder pressure spring	1										
42-253.01-786	Fassung, kompl. mit Linse mount, compl. with lens	1										
M1,4 x 4 DIN 63	Senkschraube C. S. screw	1										
15-10.149- 7	Anschlagschraube stop screw	1										
15-10.21 -11	Schraube screw	1										
15-10.24 - 5	Befestigungsschraube screw	4										
15-12.02-17/1	Scheibe washer	1										
15-12.11- 6/1	Feder spring	1										

1.12.61

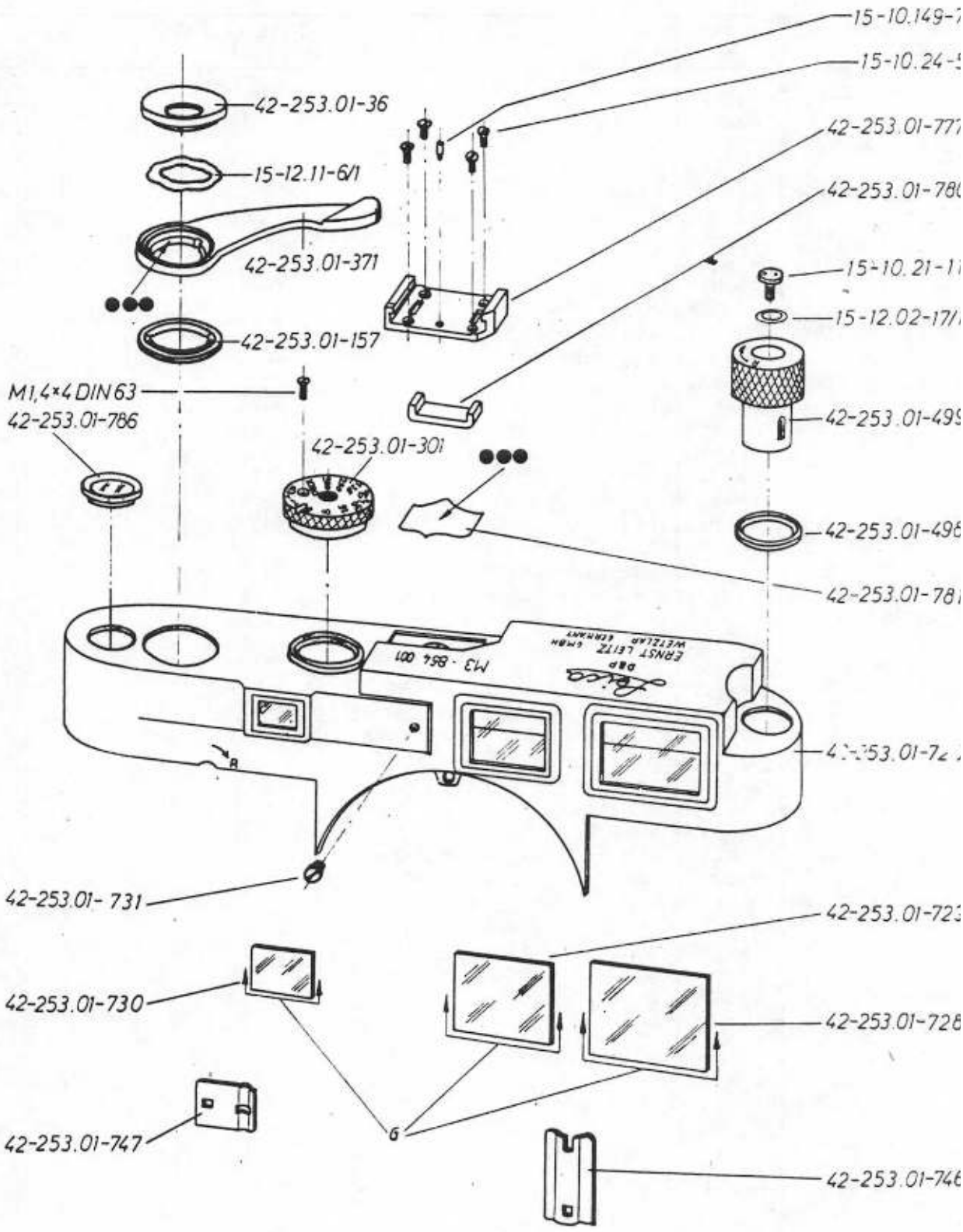

1.12.61

●●● 704
G Gießharz

42-253/3.1	Leica M3-700 001...854 000	Leitz WETZLAR

Bestell-Nr Part-No	Benennung Description	Leica - Modell M3	M2	M1
42-253.01-483	Buchse bushing	2	2	2
42-253.01-485	Feder spring	2	2	2
42-253.01-486	Abschlußkappe cover ring	2	2	2
42-253.01-733	Augenmuschel eye cup	1	-	-
42-253.01-734	Dichtungsring sealing ring	1	-	-
42-253.01-750	Deckel, kompl. (1/4 ") base plate, compl. (1/4 ")	1	1	1
42-253.01-752	Knebel lock knob	1	1	1
42-253.01-753	Klappbügel handle	1	1	1
42-253.01-754	Lagerbolzen bearing pin	1	1	1
42-253.01-757	Riegelteller locking plate	1	1	1
42-253.01-809	Deckel, genietet (1/4 ") base plate, riveted (1/4 ")	1	1	1
42-253.17-136	Augenlinse, gefaßt eye lens, spun in	1	-	-
2,5 DIN 125	Scheibe / disc	1	1	1
15-10.175-9	Senkschraube, verchromt countersunk screw, chrome-plated	1	-	-
15-10.232-5	Schraube, brüniert/screw, burnished	1	1	1
15-12.10-12/1	Zwischenring intermediate ring	1	-	-
15-12.06-14/5	Zwischenscheibe intermediate disc	1	1	1
15-12.06-14/6	Scheibe 0,5 mm dick, nach Bedarf disc 0.5 mm thick, when needed	1	1	1
15-12.06-14/11	Scheibe 0,2 mm dick, nach Bedarf disc 0.2 mm thick, when needed	1	1	1
15-12.06-16/1	Scheibe disc	1	1	1
15-12.06-37/1	Federscheibe spring disc	1	1	1

TECHNISCHER KUNDENDIENST

25.10.66

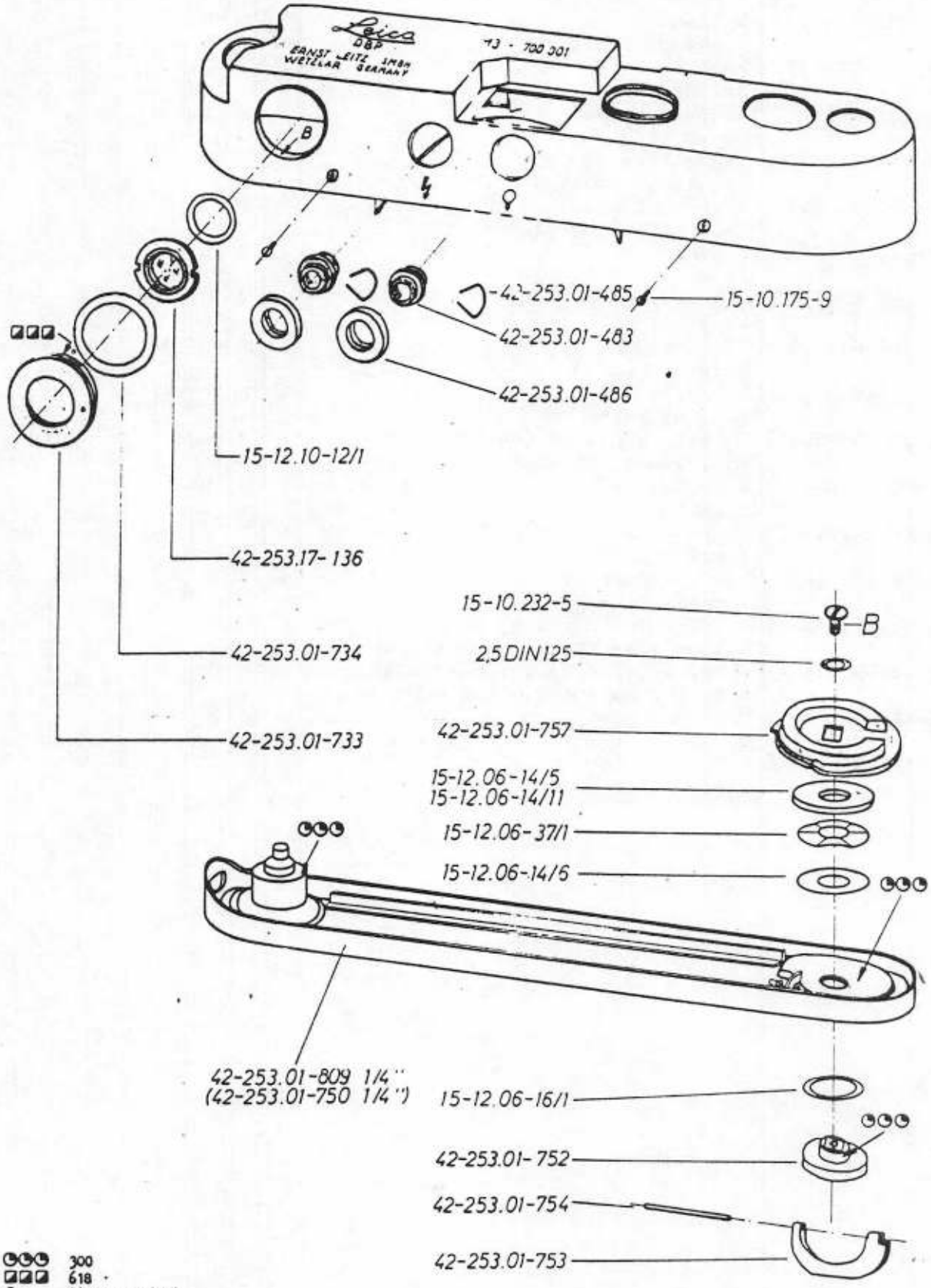

300
618
B Sicherungslack

TECHNISCHER KUNDENDIENST

25.10.66

42-253/3.2	Leica M3-854 001...	Leitz WETZLAR

Bestell-Nr Part-No	Benennung Description	Leica - Modell M3	M2	M1
42-253.01-483	Buchse bushing	2	2	2
42-253.01-485	Feder spring	2	2	2
42-253.01-486	Abschlußkappe cover ring	2	2	2
42-253.01-697	Augenlinse, gefaßt eye lens, mounted	1	-	-
42-253.01-750	Deckel, kompl. (1/4 ") base plate, compl. (1/4 ")	1	1	1
42-253.01-752	Knebel lock knob	1	1	1
42-253.01-753	Klappbügel handle	1	1	1
42-253.01-754	Lagerbolzen bearing pin	1	1	1
42-253.01-757	Riegelteller locking plate	1	1	1
42-253.01-809	Deckel, genietet (1/4 ") base plate, riveted (1/4 ")	1	1	1
2.5 DIN 125	Scheibe disc	1	1	1
15-10.232-5	Schraube screw	1	1	1
15-12.06-14/5	Zwischenscheibe intermediate disc	1	1	1
15-12.06-14/6	Scheibe 0,5 mm dick, nach Bedarf disc 0.5 mm thick, when needed	1	1	1
15-12.06-14/11	Scheibe 0,2 mm dick, nach Bedarf disc 0.2 mm thick, when needed	1	1	1
15-12.06-16/1	Scheibe disc	1	1	1
15-12.06-37/1	Federscheibe spring disc	1	1	1

TECHNISCHER KUNDENDIENST

25.10.61

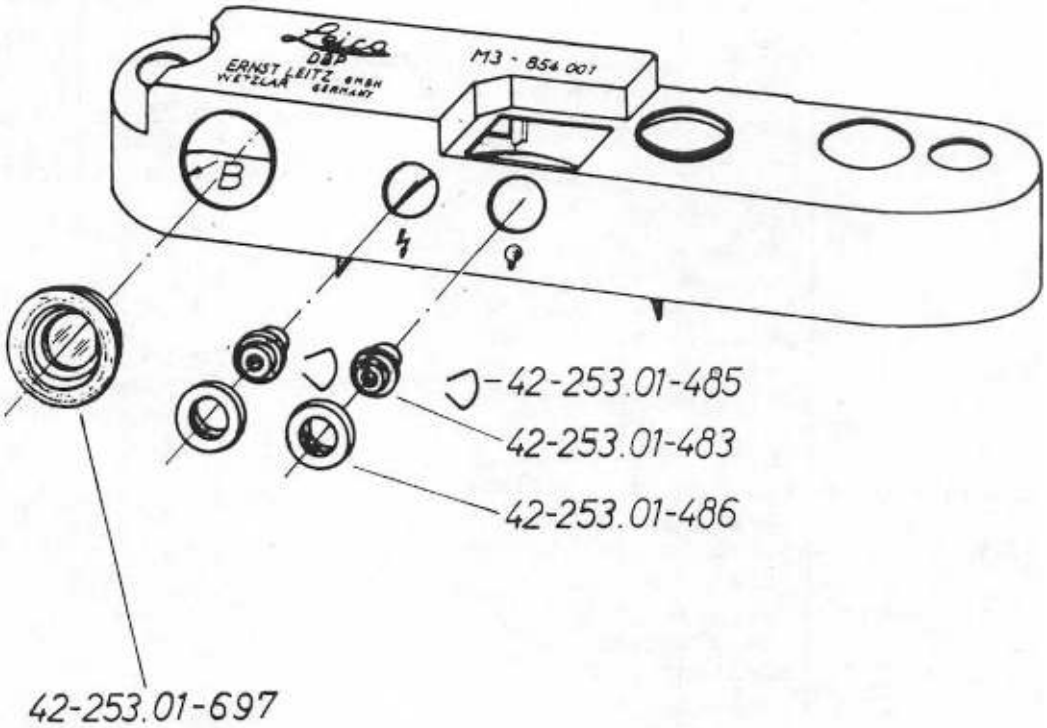

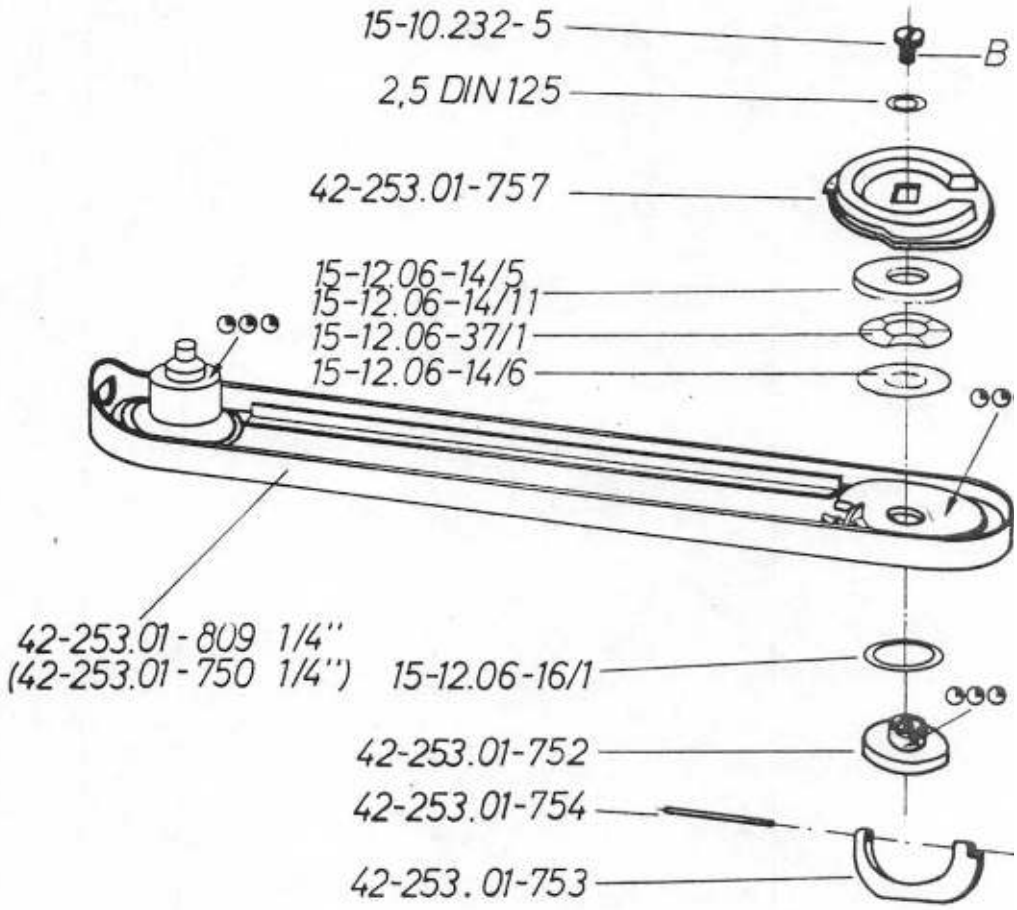

TECHNISCHER KUNDENDIENST

25.10.66

300
B Sicherungslack

2-253/ 4.1

Leica M3 - 700 001...

Ernst Leitz GmbH Wetzlar

Bestell-Nr Part-No	Benennung Description	Leica-Modell M3	M2	M1	IIIg	Ig	IIIf	IIf	If	IIId	IIc
4 006 J	Kassette " N " magazine	1	1	1	1	1	1	1	1	1	1
42-253.02- 5	äußere Kassettenhülse, montiert outer magazine shell, ass.	1	1	1	1	1	1	1	1	1	1
42-253.02- 8	Niet rivet	2	2	2	2	2	2	2	2	2	2
42-253.02- 12	Schnappfeder, genietet lock spring, riveted	1	1	1	1	1	1	1	1	1	1
42-253.02- 18	innere Kassettenhülse, montiert inner magazine shell, ass.	1	1	1	1	1	1	1	1	1	1
14 015 A	Kassettenspule, montiert magazine spool, ass.	1	1	1	1	1	1	1	1	1	1
42-253.02- 26	Gewindestift threaded pin	1	1	1	1	1	1	1	1	1	1
42-253.02- 27	Spuleneinlage inlay	1	1	1	1	1	1	1	1	1	1
42-253.02- 31	Federkappe, montiert spring plate, ass.	1	1	1	1	1	1	1	1	1	1
15-10.144-11	Schraube, brüniert screw, burnished	2	2	2	2	2	2	2	2	2	2
15-10.144-12	Schraube, brüniert screw, burnished	2	2	2	2	2	2	2	2	2	2
15-12.13-5/1	Dichtungsring sealing ring	1	1	1	1	1	1	1	1	1	1

12. 7.62

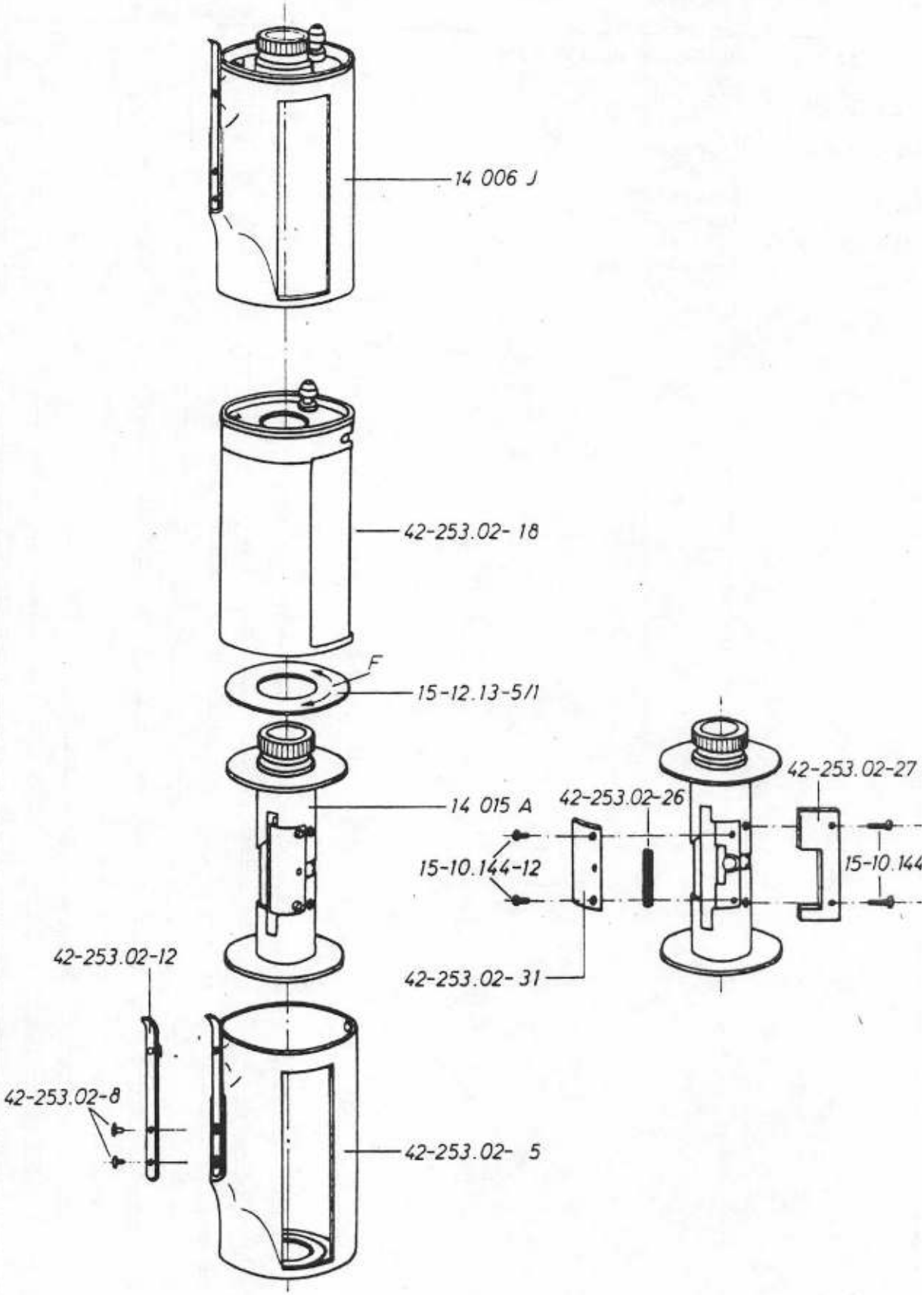

1.2. 7.62

Daniel D. Teoli Jr. Archival Collection

F Teroson-Fluid spez.

42-253/ 5.1 **Leica M3-700 001...**

Ernst Leitz GmbH Wetzlar

Bestell-Nr Part-No	Benennung Description	M3	M2	M1	IIIg	Ig					
14 022 H	Aufwickelspule, mont. take-up spool, ass.	1	1	1	1	1					
42-253.03- 4	Spulenhülse, mont. spool sleeve, ass.	1	1	1	1	1					
42-253.03- 11	Auflage bushing	1	1	1	1	1					
42-253.03- 13	Druckfeder pressure spring	1	1	1	1	1					
42-253.03- 14	Spulenknopf knurled knob	1	1	1	1	1					

12. 7. 6

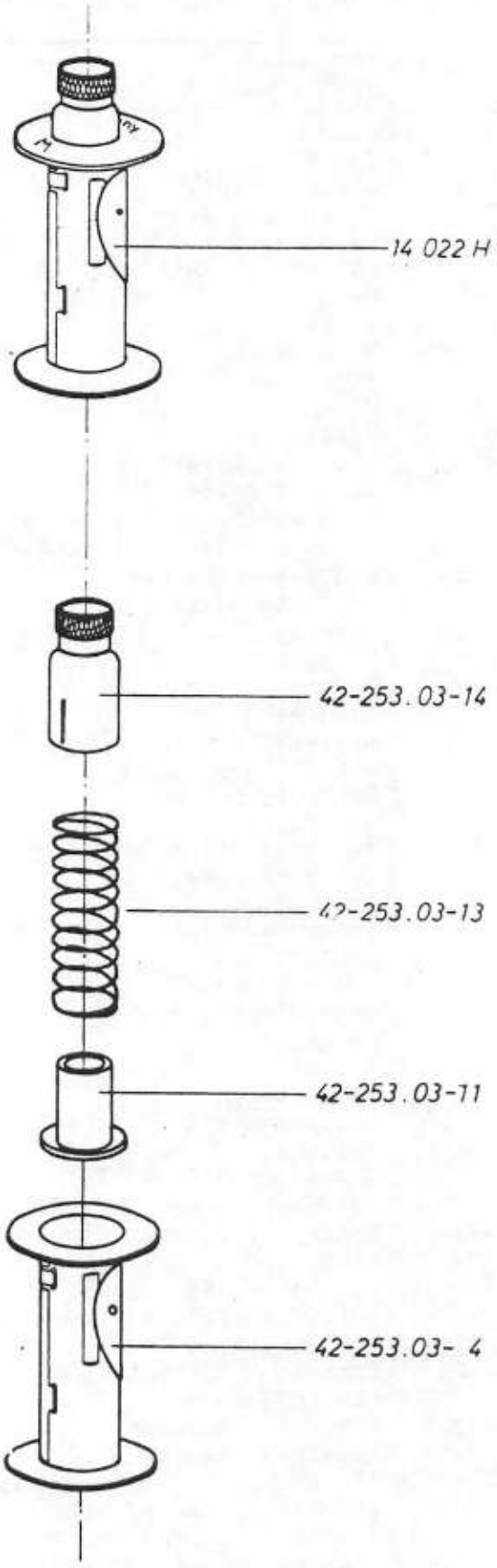

12. 7.62

2-253/6.1	Leica M3 700 001...785 800	Leitz WETZLAR

estell-Nr art-No	Benennung Description	Leica-Modell M3					
2 216-460	Öse eyelet	1					
2-253.01-116	Hebel, kompl. lever, compl.	1					
2-253.01-554	Abstimmscheibe 0,1 mm, nach Bedarf adjusting washer 0.1 mm, when needed	1					
2-253.01-557	Öse eyelet	2					
2-253.01-558	Niet, kurz rivet, short	1					
2-253.01-560	Niet rivet	1					
2-253.01-565	Dichtungsstreifen sealing strip	1					
2-253.01-566	Abstimmscheibe 0,2 mm, nach Bedarf adjusting washer 0.2 mm, when needed	1					
2-253.01-593	Kupplungsschraube coupling screw	1					
2-253.01-594	Flansch flange	1					
2-253.01-595	Buchse bushing	1					
2-253.01-596	Abschlußkappe cover plate	1					
2-253.01-597	Schraube screw	1					
2-253.01-598	Führungsbuchse guide bushing	1					
2-253.01-599	Druckfeder pressure spring	1					
2-253.01-600	Druckbolzen pressure bolt	1					
2-253.01-605	Hebel, genietet lever, riveted	1					
2-253.01-904	Filzstreifen feld strip	2					
2-253.01-948	Auslösebolzen, Untergr., bestehend aus: release bolt, sub groub, existing of: 42-253.01-598, 42-253.01-599, 42-253.01-600, 1,5 DIN 6799	1					
2-253.01-955	Entkupplung, mont., bestehend aus: coupling, ass, existing of: 42-253.01-293, 42-253.01-294, 42-253.01-295, 15-12.03-13/1, 15-12.03-14/1	1					
2-582.01-328	Gehäuse, vollständig housing, compl.	1					
2-582.01-329	Gehäuse, genietet housing, riveted	1					
,5 DIN 6799	Sicherungsscheibe / C.clip	1					
1,7x3 LN 120 19	Zylinderschraube, brüniert cylindrical head screw, burnished	3					
5-10.22 - 6	Linsenschraube, schwarz halbglanz oval head screw, black semi matt	4					
5-10.172- 6	Schraube, verchromt / screw,chrome-plated	1					
5-12.03-13/1	Unterlegscheibe / washer	1					
5-12.03-14/1	Unterlegscheibe 0,1 mm dick, nach Bedarf washer 0.1mm thick, when needed	1					
5-12.03-14/2	Unterlegscheibe 0,06 mm dick, nach Bedarf washer 0.06 mm thick, when needed	1					

TECHNISCHER KUNDENDIENST

25.10.66

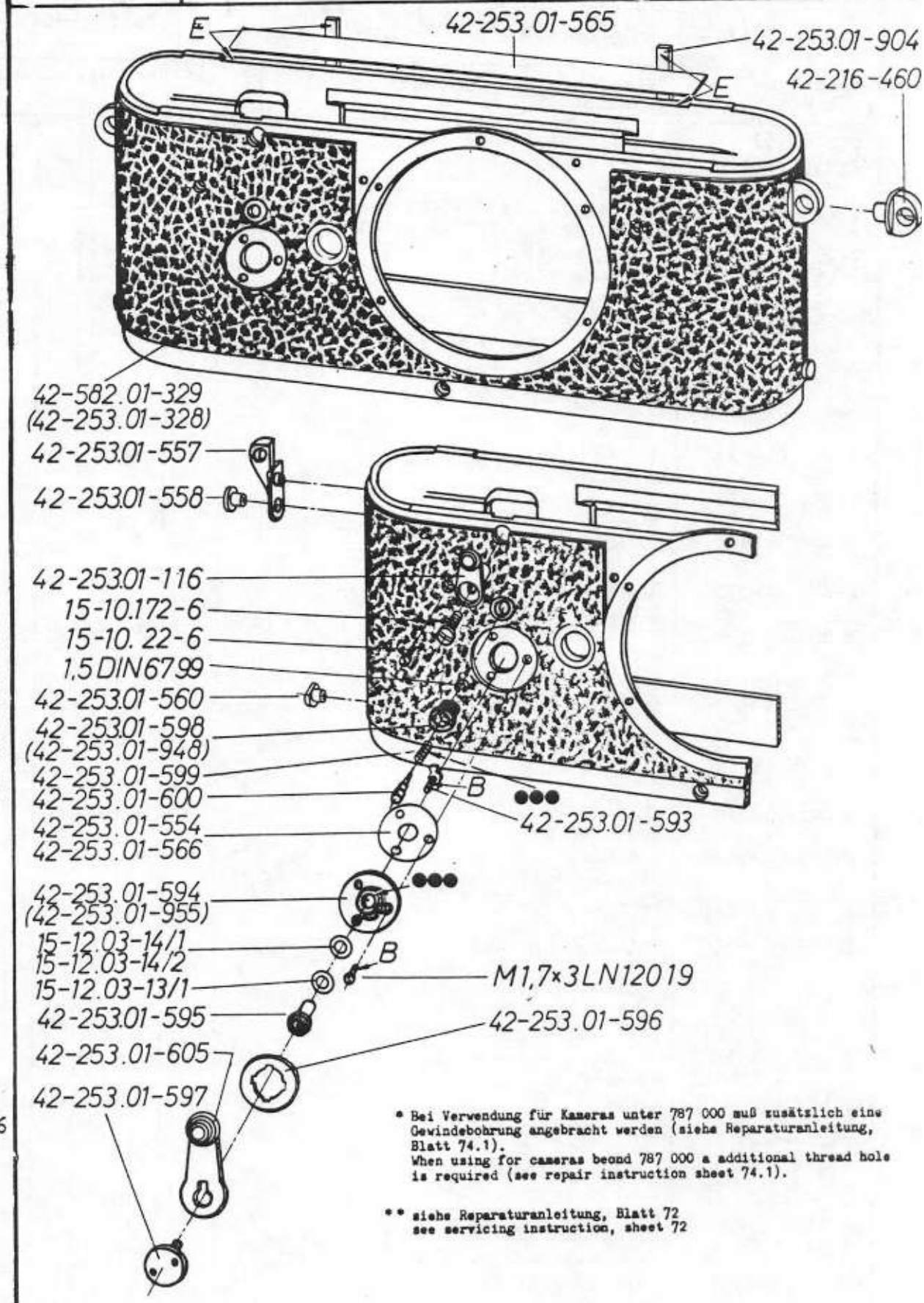

TECHNISCHER KUNDENDIENST

25.10.66

* Bei Verwendung für Kameras unter 787 000 muß zusätzlich eine Gewindebohrung angebracht werden (siehe Reparaturanleitung, Blatt 74.1).
When using for cameras beond 787 000 a additional thread hole is required (see repair instruction sheet 74.1).

** siehe Reparaturanleitung, Blatt 72
see servicing instruction, sheet 72

●●● 704
B Sicherungslack
E Kleber EC 880

42-253/6.2	Leica M3 785 801...	Leitz WETZLAR

Bestell-Nr Part-No	Benennung Description	Leica-Modell M3					
42 216-460	Öse / eyelet	1					
42-253.01-116	Hebel, kompl. lever, compl.	1					
42-253.01-554	Abstimmscheibe 0,1 mm, nach Bedarf adjusting washer 0.1 mm, when needed	1					
42-253.01-560	Niet / rivet	1					
42-253.01-565	Dichtungsstreifen sealing strip	1					
42-253.01-566	Abstimmscheibe 0,2 mm, nach Bedarf adjusting washer 0.2 mm, when needed	1					
42-253.01-593	Kupplungsschraube coupling screw	1					
42-253.01-594	Flansch flange	1					
42-253.01-595	Buchse bushing	1					
42-253.01-596	Abschlußkappe cover plate	1					
42-253.01-597	Schraube screw	1					
42-253.01-598	Führungsbuchse guide bushing	1					
42-253.01-599	Druckfeder pressure spring	1					
42-253.01-600	Druckbolzen pressure bolt	1					
42-253.01-605	Hebel, genietet lever, riveted	1					
42-253.01-904	Filzstreifen feld strip	2					
42-253.01-948	Auslösebolzen, Untergr., bestehend aus: release bolt, sub groub, existing of: 42-253.01-598, 42-253.01-599, 42-253.01-600, 1,5 DIN 6799	1					
42-253.01-955	Entkupplung, mont., bestehend aus: coupling, ass., existing of: 42-253.01-293, 42-253.01-294, 42-253.01-295, 15-12.03-13/1 15-12.03-14/1	1					
42-582.01-440	Gehäuse, vollständig housing, compl.	1					
42-582.01-441	Gehäuse, genietet housing, riveted	1					
M1,7x3 LN 120 19	Schraube, brüniert screw, burnished	3					
15-10.172-6	Schraube, verchromt screw, chrome-plated	1					
15-10.22-6	Linsenschraube, schwarz halbglanz oval head screw, black semi matt	4					
15-12.03-13/1	Unterlegscheibe washer	1					
15-12.03-14/1	Unterlegscheibe 0,1 mm, nach Bedarf washer 0.1 mm thick, when needed	1					
15-12.03-14/2	Unterlegscheibe 0,06 mm, nach Bedarf washer 0.06, when needed	1					
1,5 DIN 6799	Sicherungsscheibe C. clip	1					

TECHNISCHER KUNDENDIENST

25.10.66

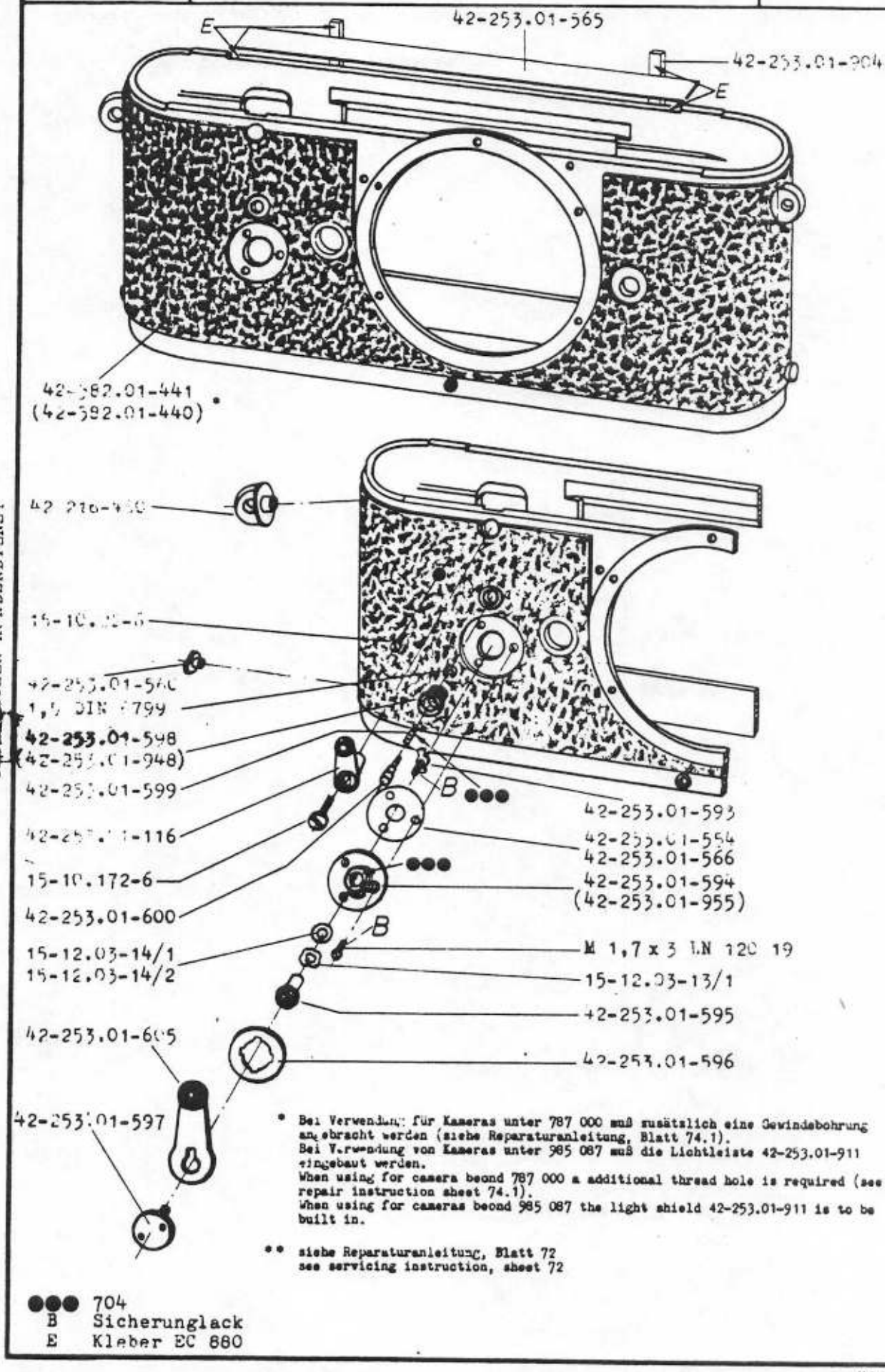

TECHNISCHER KUNDENDIENST

25.10.66

* Bei Verwendung für Kameras unter 787 000 muß zusätzlich eine Gewindebohrung angebracht werden (siehe Reparaturanleitung, Blatt 74.1).
Bei Verwendung von Kameras unter 985 087 muß die Lichtleiste 42-253.01-911 eingebaut werden.
When using for camera beond 787 000 a additional thread hole is required (see repair instruction sheet 74.1).
When using for cameras beond 985 087 the light shield 42-253.01-911 is to be built in.

** siehe Reparaturanleitung, Blatt 72
see servicing instruction, sheet 72

●●● 704
B Sicherunglack
E Kleber EC 880

Leica M3-700 001...703 000

Leitz WETZLAR

Bestell-Nr Part-No	Benennung Description	Leica-Modell M3									
42-253.01- 536	Federring * spring ring	1									
42-253.01- 538	Führungsbuchse guide bushing	1									
42-253.01- 539	Druckfeder pressure spring	1									
42-253.01- 540	Führungsbolzen guide bolt	1									
42-253.01- 541	Rastatück stop lever	1									
42-253.01- 548	Schutzhülse cover sleeve	1									
42-253.01- 550	Sperrplättchen stop plate	1									
42-253.01- 941	Führungsbuchse, mont. mit: guide bushing, ass. with: 42-253.01-538, 42-253.01-539, 42-253.01-540, 1,5 DIN 6799	1									
42-253.01- 998	Anschlagring flange ring	1									
M 2 x 4LN 120 21	Zylinderschraube, brüniert cylindrical head screw, burnished	1									
15-10.21-10	Zylinderschraube, brüniert cylindrical head screw, burnished	1									
15-10.25- 7	Schraube, verchromt screw, chrome-plated	1									
15-10.170- 9	Zylinderschraube, verchromt cylindrical head screw, chrome-pl.	4									
15-12.06-17/1	Scheibe, bei Bedarf washer, when needed	1									
1,5 DIN 6799	Idealscheibe C. clip	1									

* es kann auch der Anschlagring 42-253.01-938 jedoch nur in Verbindung mit 42-253.01-939 und 4 mal 42-253.01-940 verwendet werden (siehe Blatt 7.6)
the flange ring 42-253.01-938 can be used, but only in connection with 42-253.01-939 and 4 times 42-253.01-940 (see sheet 7.6)

TECHNISCHER KUNDENDIENST

25.10.66

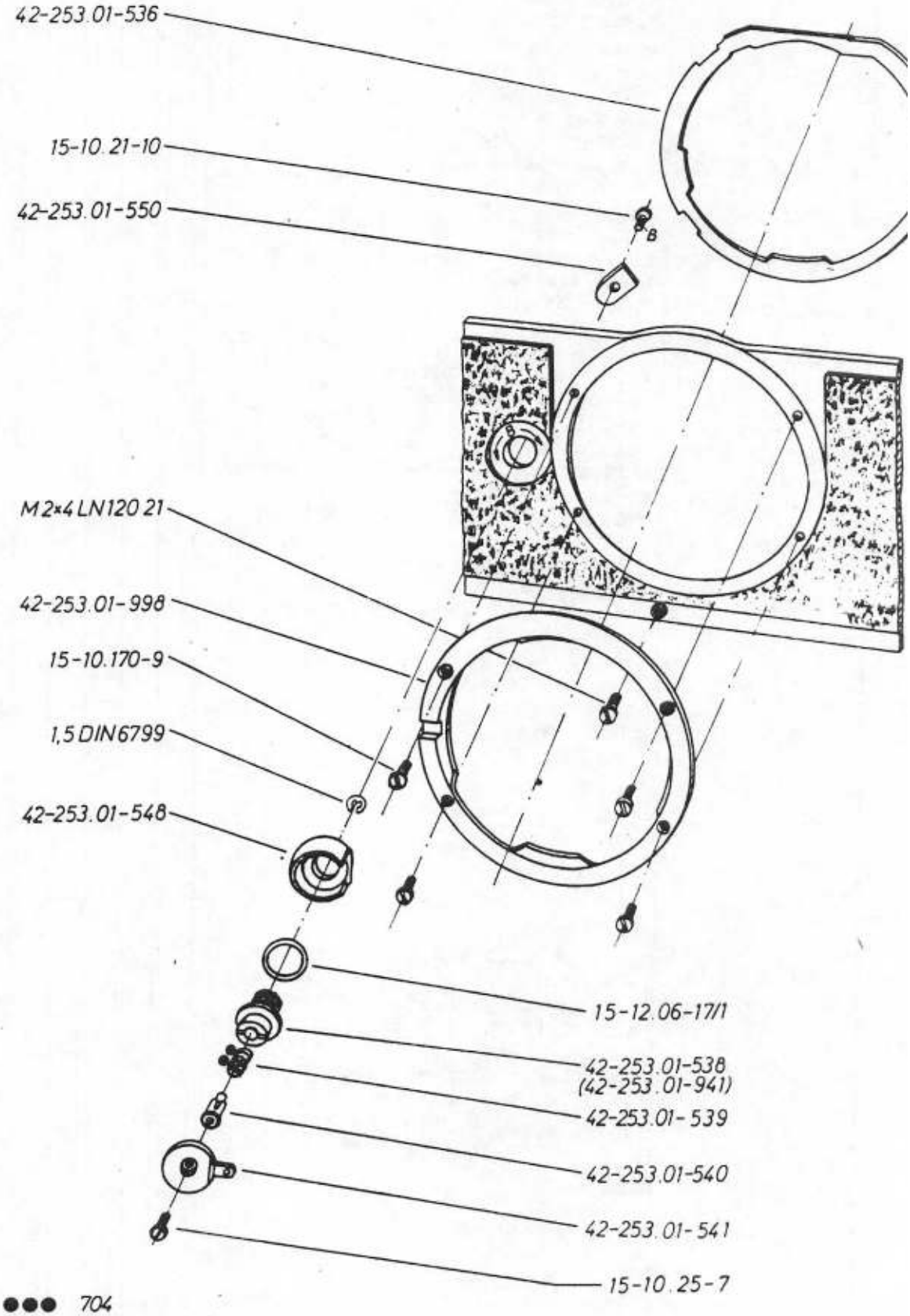

●●● 704
B Sicherungs-Lack

TECHNISCHER KUNDENDIENST

25.10.66

Leica M3-703 001...746 500

Leitz WETZLAR

Bestell-Nr Part-No	Benennung Description	Leica-Modell M3
42-253.01- 535	Anschlagring * flange ring	1
42-253.01- 536	Federring spring ring	1
42-253.01- 538	Führungsbuchse guide bushing	1
42-253.01- 539	Druckfeder pressure spring	1
42-253.01- 540	Führungsbolzen guide bolt	1
42-253.01- 541	Raststück stop lever	1
42-253.01- 548	Schutzhülse cover sleeve	1
42-253.01- 550	Sperrplättchen stop plate	1
42-253.01- 941	Führungsbuchse, mont. mit: guide bushing, ass, with: 42-253.01-538, 42-253.01-539, 42-253.01-540, 1,5 DIN 6799	1
M 2 x 4 LN 120 21	Zylinderschraube, brüniert cylindrical head screw, burnished	1
15-10.21-10	Zylinderschraube, brüniert cylindrical head screw, burnished	1
15-10.25- 7	Schraube, verchromt screw, chrome-plated	1
15-10.170- 9	Zylinderschraube, verchromt cylindrical head screw, chrome-pl.	4
15-10.170-10	Schraube, brüniert screw, burnished	1
15-12.06-17/1	Scheibe, bei Bedarf washer, when needed	
1,5 DIN 6799	Idealscheibe C. clip	1

*es kann auch der Anschlagring 42-253.01-938 jedoch nur in Verbindung mit 42-253.01-939 und 4 mal 42-253.01-940 verwendet werden (siehe Blatt 7.6)
the flange ring 42-253.01-938 can be used, but only in connection with 42-253.01-939 and 4 times 42-253.01-940 (see sheet 7.6)

TECHNISCHER KUNDENDIENST

25.10.66

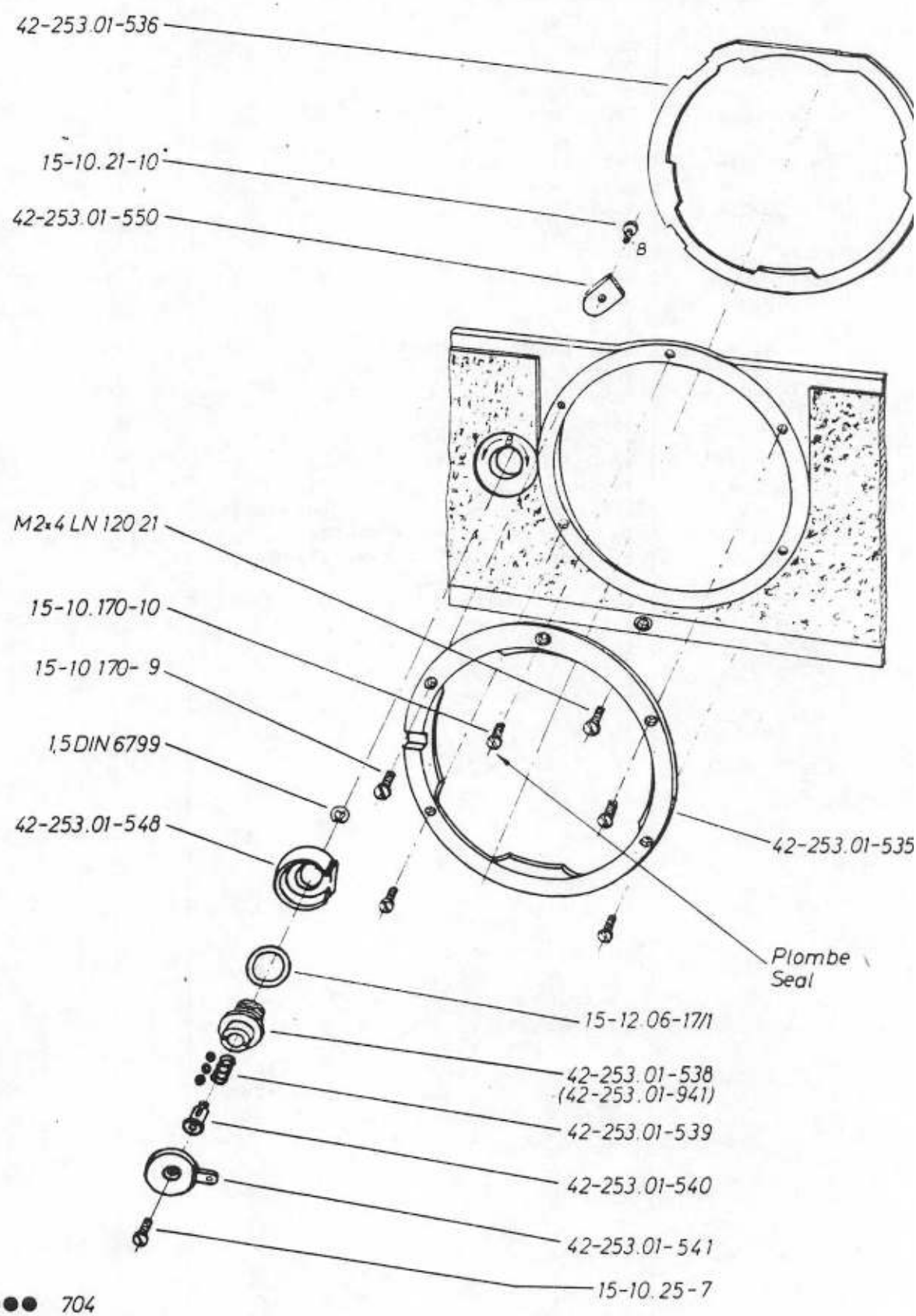

●●● 704
B Sicherungs-Lack

TECHNISCHER KUNDENDIENST

25.10.66

42-253/ 7.3	Leica M3 - 746 501 ... 963 000	Leitz WETZLAR

Bestell-Nr Part-No	Benennung Description	Leica - Modell M3	M2	M1							
42-253.01-535	Anschlagring* flange ring	1	1	1							
42-253.01-538	Führungsbuchse guide bushing	1	-	-							
42-253.01-539	Druckfeder pressure spring	1	1	1							
42-253.01-540	Führungsbolzen guide bolt	1	1	1							
42-253.01-541	Raststück stop lever	1	-	-							
42-253.01-548	Schutzhülse cover sleeve	1	-	-							
42-253.01-609	Niet rivet	1	1	1							
42-253.01-773	Federring, genietet spring ring, riveted	1	1	1							
42-253.01-941	Führungsbuchse, mont. mit: guide bushing, ass. with: 42-253.01-538, 42-253.01-539, 42-253.01-540, 1,5 DIN 6799	1	1	1							
M 2 x 4LN 120 21	Zylinderschraube, brüniert cylindrical head screw, burnished	1	1	1							
15-10.170- 9	Zylinderschraube, verchromt cylindrical head screw, chrome-pl.	4	4	4							
15-10.170-10	Schraube, brüniert screw, burnished	1	1	1							
15-10.21 -10	Schraube, brüniert screw, burnished	4	4	4							
15-10.25 - 7	Schraube, verchromt screw, chrome-plated	1	1	1							
15-12.06-17/1	Scheibe, nach Bedarf washer, when needed										
1,5 DIN 6799	Idealscheibe C. clip	1	1	1							

* es kann auch der Anschlagring 42-253.01-938 jedoch nur in Verbindung mit 42-253.01-939 und 4 mal 42-253.01-940 verwendet werden (siehe Blatt 7.6)
the flange ring 42-253.01-938 can be used, but only in connection with 42-253.01-939 and 4 times 42-253.01-940 (see sheet 7.6)

25.10.6

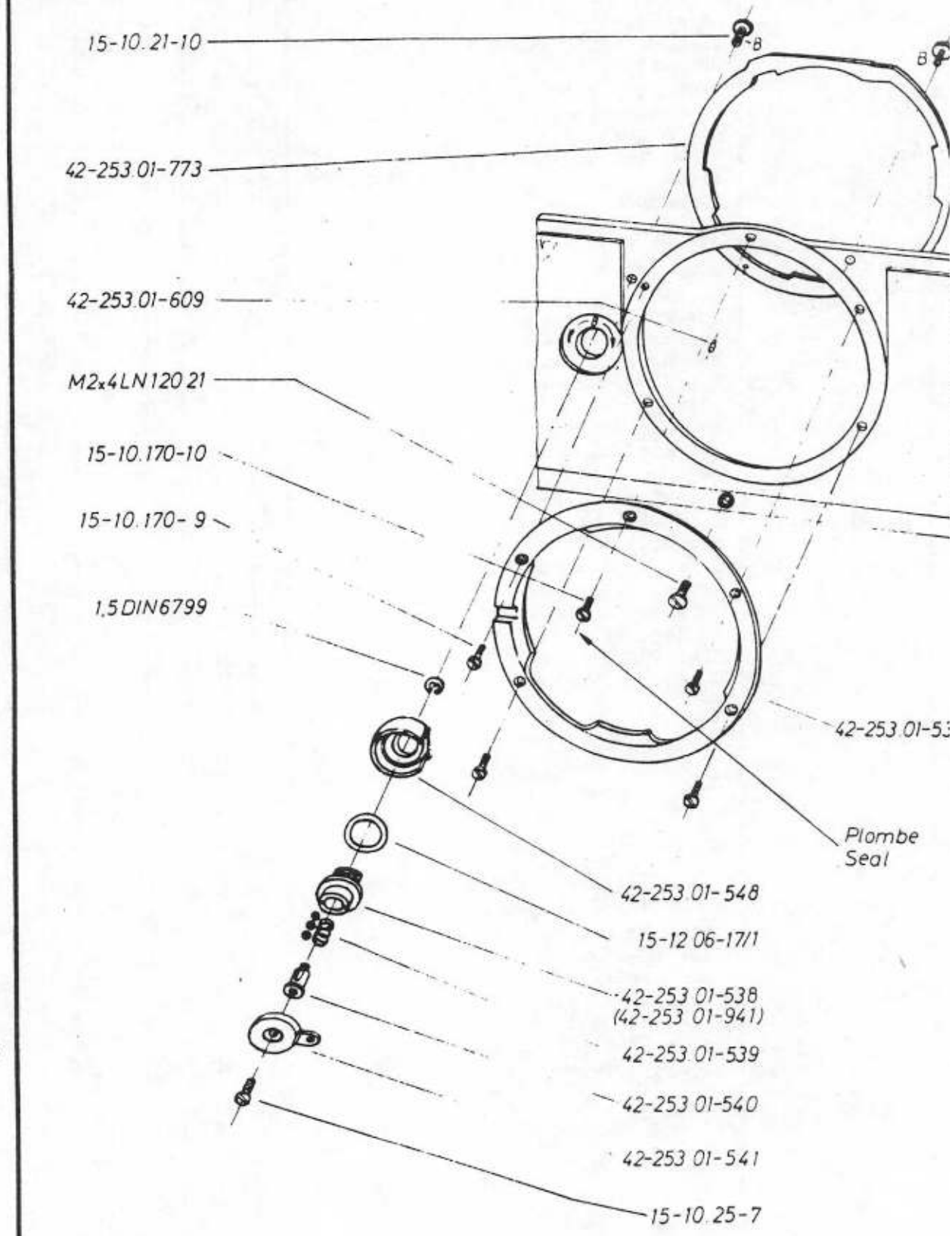

●●● 704
B Sicherungs-Lack

TECHNISCHER KUNDENDIENST

Leica M3-963 001...1 133 000

Leitz WETZLAR

Bestell-Nr Part-No	Benennung Description	Leica - Modell M3	M2	M1
42-253.01-535	Anschlagring * flange ring	1	1	1
42-253.01-539	Druckfeder pressure spring	1	1	1
42-253.01-540	Führungsbolzen guide bolt	1	1	1
42-253.01-609	Niet rivet	1	1	1
42-253.01-612	Führungsbuchse guide bushing	1	1	1
42-253.01-613	Raststück stop lever	1	1	1
42-253.01-614	Schutzhülse cover sleeve	1	-	-
42-253.01-773	Federring, genietet spring ring, riveted	1	1	1
M 2x4 LN 120 21	Zylinderschraube, bruniert cylindrical head screw, burnished	1	1	1
15-10.170- 9	Zylinderschraube, verchromt cylindrical head screw, chrome-pl.	4	4	4
15-10.170-10	Schraube, bruniert screw, burnished	1	1	1
15-10.21 -10	Schraube, bruniert screw, burnished	4	4	4
15-10.25 - 7	Schraube, verchromt screw, chrome-plated	1	1	1
15-12.06 -17/1	Scheibe, nach Bedarf washer, when needed			
1,5 DIN 6799	Sicherungsscheibe C. clip	1	1	1

* es kann auch der Anschlagring 42-253.01-938 jedoch nur in Verbindung mit 42-253.01-939 und 4 mal 42-253.01-940 verwendet werden (siehe Blatt 7.6)
the flange ring 42-253.01-938 can be used, but only in connection with 42-253.01-939 and 4 times 42-253.01-940 (see sheet 7.6)

TECHNISCHER KUNDENDIENST

25.12.70

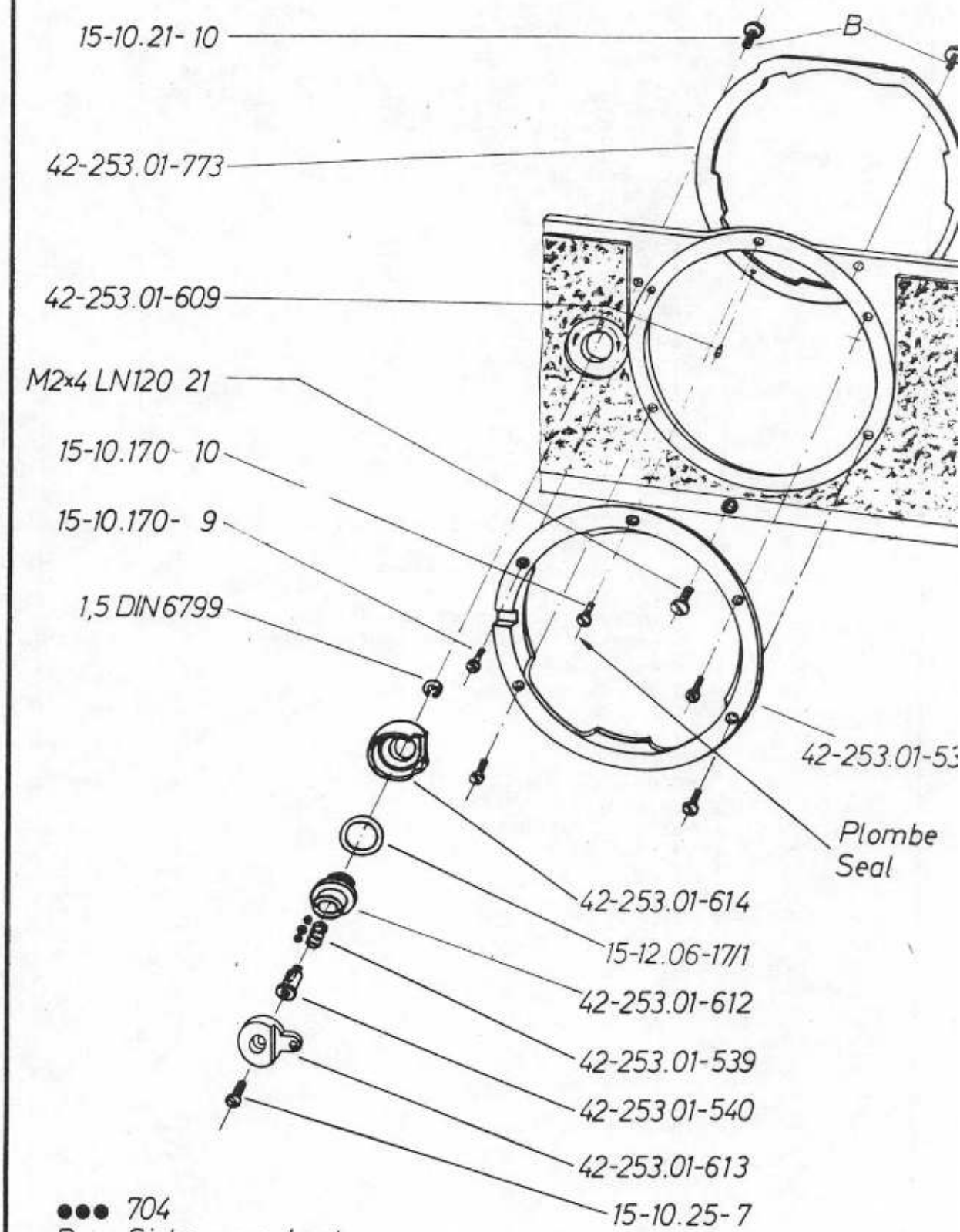

●●● 704
B Sicherungs-Lack

TECHNISCHER KUNDENDIENST

25.10.66

Teile-Nr Part-No	Benennung Description	Leica-Modell M3	M2	M1
42-253.01-535	Anschlagring (es kann auch der Anschlagring 42-253.01-938 jedoch nur in Verbindung mit 42-253.01-939 und 4 mal 42-253.01-940 verwendet werden; siehe Blatt 7.6) flange ring (the flange ring 42-253.01-938 can be used, but only in connection with 42-253.01-939 and 4 times 42-253.01-940; see sheet 7.6)	1	1	1
42-253.01-538	Führungsbuchse guide bushing	1	-	-
42-253.01-539	Druckfeder pressure spring	1	1	1
42-253.01-540	Führungsbolzen guide bolt	1	1	1
42-253.01-541	Raststück stop lever	1	-	-
42-253.01-548	Schutzhülse cover sleeve	1	-	-
42-253.01-609	Niet rivet	1	1	1
42-253.01-773	Federring, genietet spring ring, riveted	1	1	1
42-253.01-941	Führungsbuchse, mont. mit: guide bushing, ass. with: 42-253.01-538, 42-253.01-539, 42-253.01-540, 1,5 DIN 6799	1	1	1
M 2 x 4 LN 120 21	Zylinderschraube, brüniert cylindrical head screw, burnished	1	1	1
15-10.170- 9	Zylinderschraube, verchromt cylindrical head screw, chrome-plated	4	4	4
15-10.170-10	Schraube, brüniert screw, burnished	1	1	1
15-10.21 -10	Schraube screw	4	4	4
15-10.25 - 7	Schraube screw	1	1	1
15-12.06-17/1	Scheibe, nach Bedarf washer, when needed			
1,5 DIN 6799	Idealscheibe C. clip	1	1	1

TECHNISCHER KUNDENDIENST

25.10.70

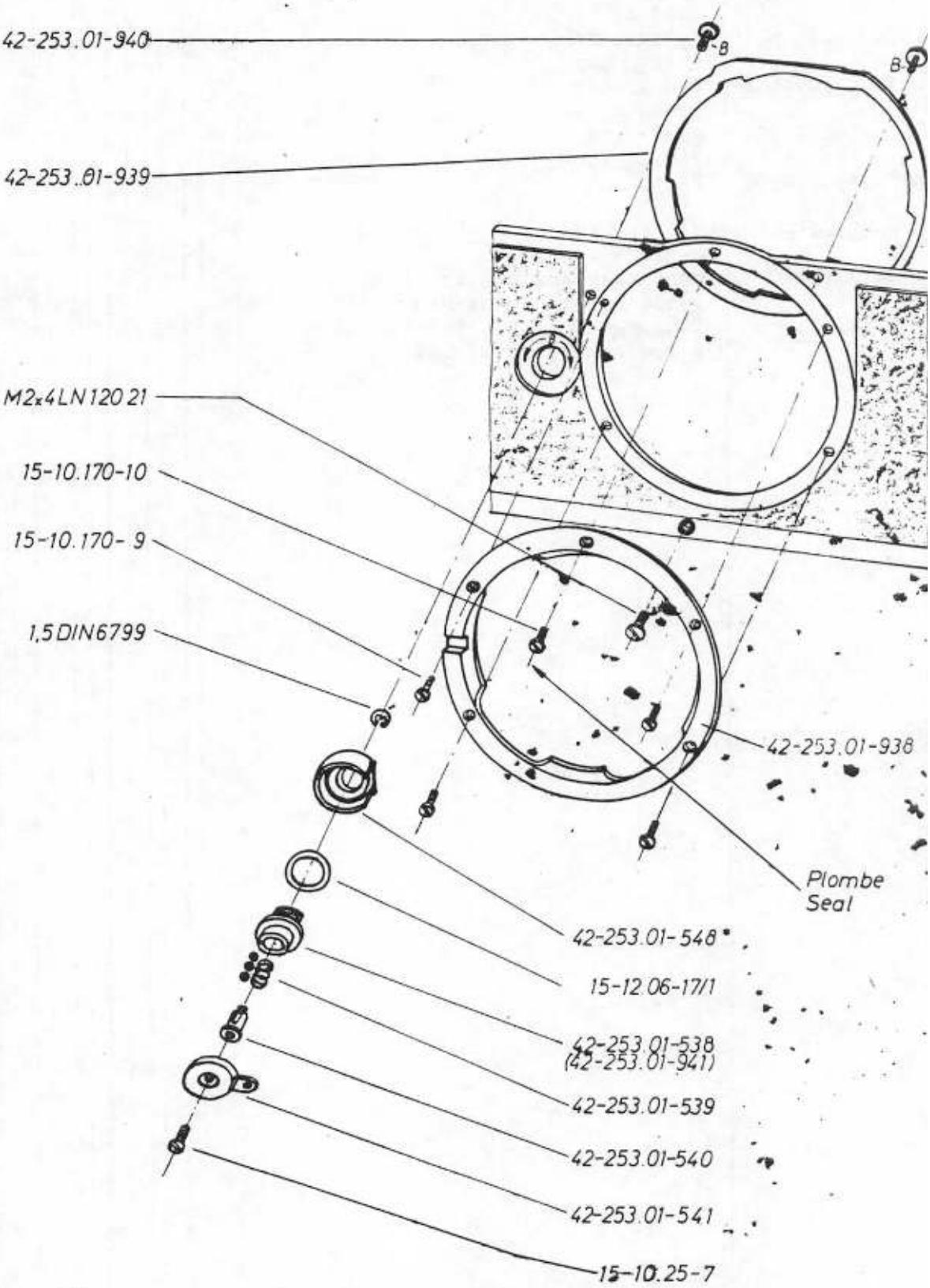

●●● 704
B Sicherungs-Lack

* nur bis Serien-Nr. 1 156 030 ab Nr. 1 156 031 wird keine Schutzhülse mehr eingebaut.
up to serial-No. 1 156 030 only, from No. 1 156 031 onwards the cover sleev
is not longer mounted.

TECHNISCHER KUNDENDIENST

25.10.66

42-253/8.1	Leica M3 - 700 001...785 800	Ernst Leitz GmbH Wetzlar

Bestell-Nr Part-No	Benennung Description	Leica-Modell M3							
42-253.01-542	Schieber sliding bar	1							
42-253.01-545	Federstift spring pin	1							
42-253.01-546	Druckfeder pressure spring	1							
42-253.01-559	Niet, lang rivet, long	1							
42-253.01-562	Niet rivet	1							
42-253.01-632	Stützwinkel angle	1							
15-10.171-8	Führungsschraube, brüniert guide screw, burnished	1							
15-10.171-9	Führungsschraube, brüniert guide screw, burnished	1							

12. 7.62

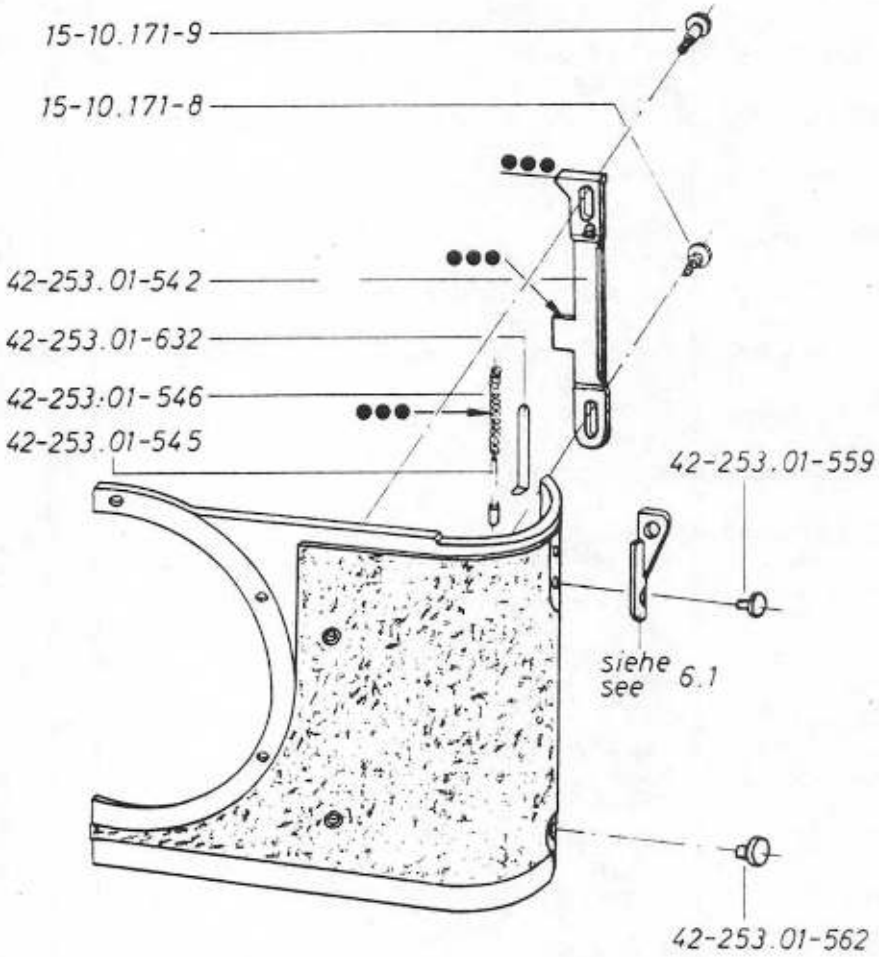
15-10.171-9
15-10.171-8
42-253.01-542
42-253.01-632
42-253.01-546
42-253.01-545
42-253.01-559
siehe see 6.1
42-253.01-562

12. 7.62

●●● 704

-253/ 8.2	Leica M3 - 785 801...830 000	Ernst Leitz GmbH. Wetzlar

stell-Nr rt-No	Benennung Description	Leica - Modell M3									
-253.01-545	Federstift spring pin	1									
-253.01-546	Druckfeder pressure spring	1									
-253.01-559	Niet, lang rivet, long	1									
-253.01-562	Niet rivet	1									
-253.01-626	Schieber, unterer lower sliding bar	1									
-253.01-627	Schieber, oberer upper sliding bar	1									
-253.01-630	Zugfeder tension spring	1									
-253.01-632	Stützwinkel angle	1									
-253.01-634	Buchse bushing	1									
-253.01-635	Führungsbuchse guide bushing	1									
-253.01-636	Nockenwelle shaft	1									
-253.01-641	Hebel, genietet lever, riveted	1									
-10.170-12	Schraube screw	1									
-10.171- 6	Schraube screw	1									
-10.171-10	Schraube screw	1									
-12.02-11/1	Scheibe disc	2									

1. 8.57

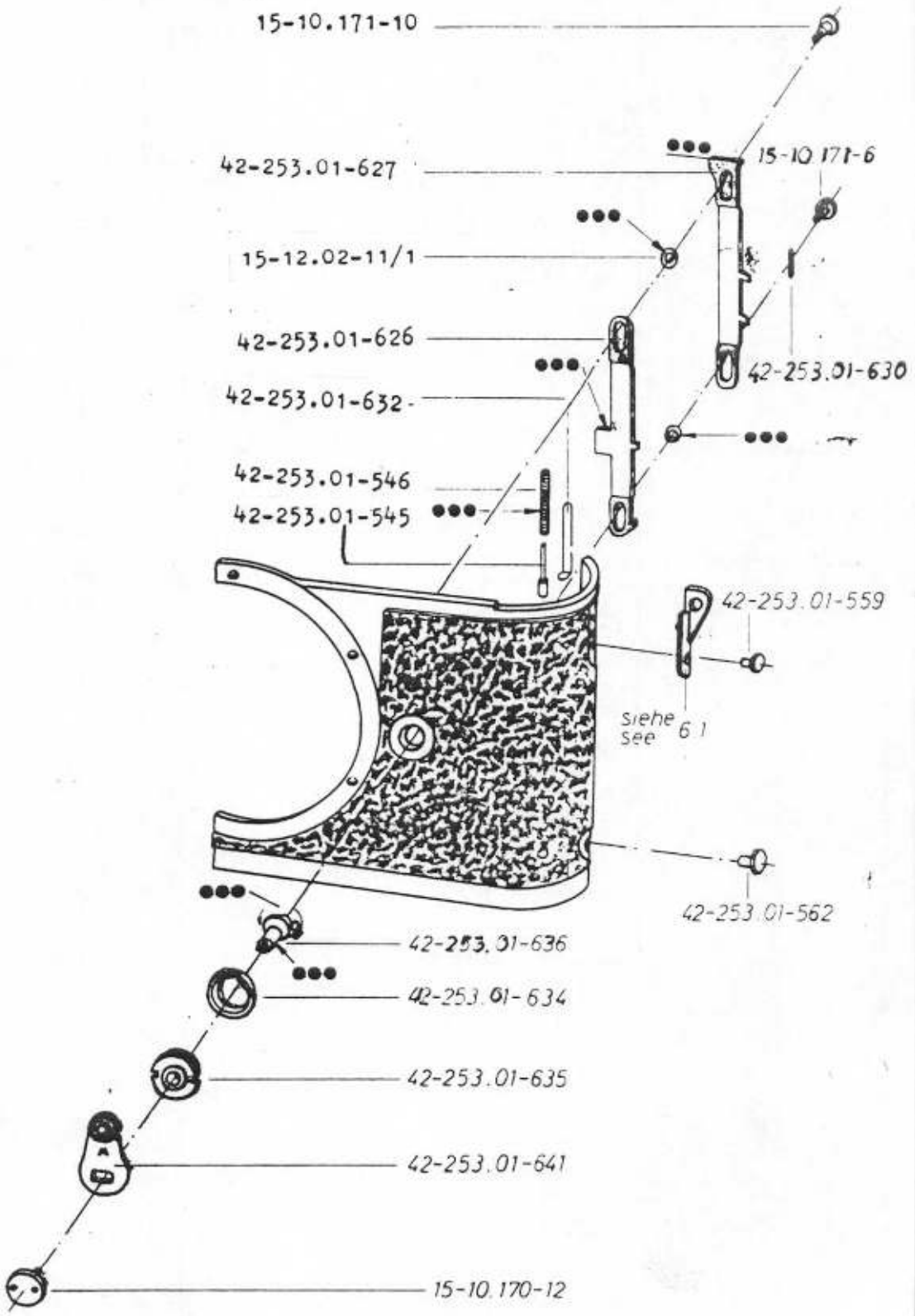

12. 7.62

●●● 704

Daniel D. Teoli Jr. Archival Collection

42-253/ 8.3	Leica M3-830 001...	Ernst Leitz GmbH Wetzlar

Bestell-Nr Part-No	Benennung Description	Leica-Modell M3									
42-253.01- 545	Federstift spring pin	1									
42-253.01- 546	Druckfeder pressure spring	1									
42-253.01- 559	Niet, lang rivet, long	1									
42-253.01- 562	Niet rivet	1									
42-253.01- 626	Schieber, unterer lower sliding bar	1									
42-253.01- 627	Schieber, oberer upper sliding bar	1									
42-253.01- 630	Zugfeder tension spring	1									
42-253.01- 632	Stützwinkel angle	1									
42-253.01- 634	Buchse bushing	1									
42-253.01- 635	Führungsbuchse guide bushing	1									
42-253.01- 636	Nockenwelle shaft	1									
42-253.01- 641	Hebel, genietet lever, riveted	1									
15-10.170-12	Schraube screw	1									
15-10.171- 6	Schraube screw	2									
15-12.02 -11/1	Scheibe disc	2									

1.8.57

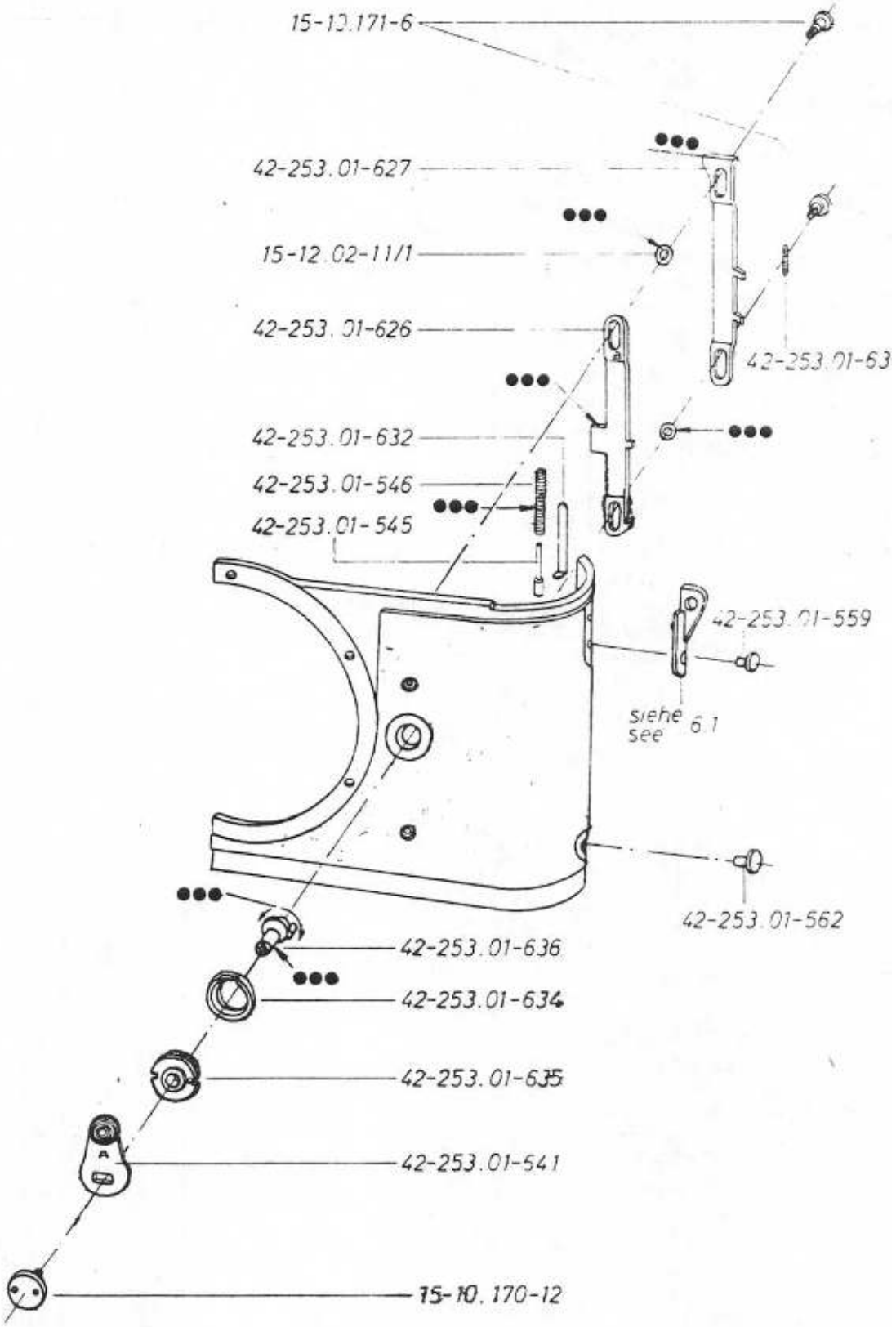

12. 7.62

Daniel D. Teoli Jr. Archival Collection

●●● 704

42-253/ 9.1	Leica M3-700 001...	Ernst Leitz GmbH Wetzlar

Bestell-Nr Part-No	Benennung Description	Leica - Modell M3	M2	M1							
42-253.01-569	Druckfeder pressure spring	1	1	1							
42-253.01-570	Rastbolzen hinge shaft	1	1	1							
42-253.01-571	Gewindestift threaded pin	1	1	1							
42-253.01-582	Bildscheibe film type indicator	1	1	1							
42-253.01-646	Rückwand, kompl. rear, compl.	1	1	1							
42-253.01-648	Andruckplatte pressure plate	1	1	1							
42-253.01-649	Feder spring	1	1	1							
42-253.01-650	Halteblech holding plate	2	2	2							
42-253.01-652	Gummistück rubber covering	1	1	1							
42-253.01-656	Nippel nipple	2	2	2							
42-253.01-664	Platte, mont. plate, ass.	1	1	1							
M1,4x1,5LN12021	Schraube, schwarz halbmatt screw, black semimat	4	4	4							
M1,4x2 LN120 21	Schraube, brüniert screw, burnished	2	2	2							

12. 7.62

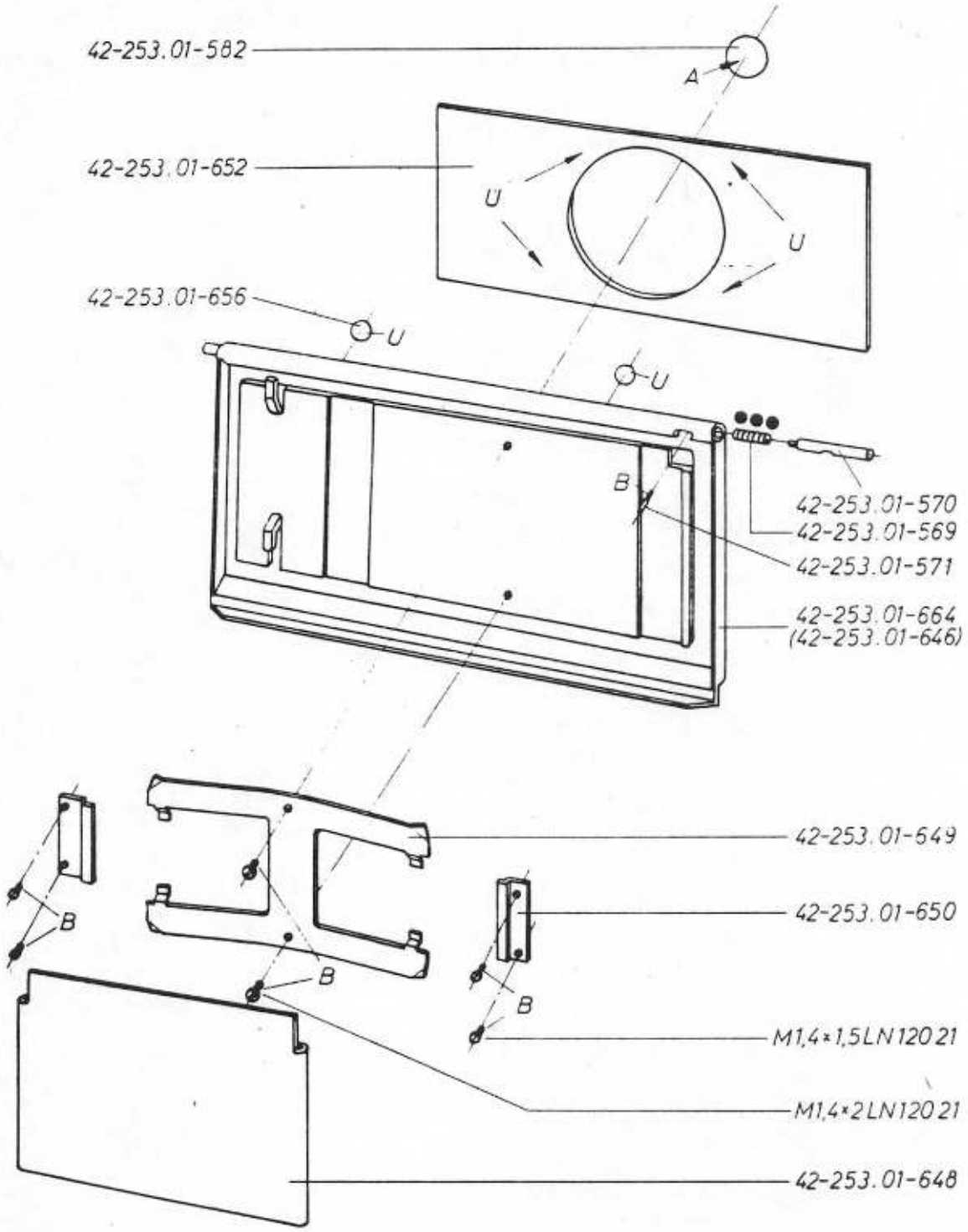

12. 7.62

●●● 704
A Araldit
B Sicherungslack
U UHU-Kleber

Leitz WETZLAR

Leica M3-700 001...782 000

42-253/10

Bestell-Nr Part-No	Benennung Description	Leica - Modell M3	M2	M1							
15-10.20-12	Zylinderschraube, brüniert cylindrical head screw, burnished	1	-	-							
15-10.29-13	Schraube, brüniert screw, burnished	1	1	-							
15-10.142-6	Schraube, brüniert screw, burnished	1	-	-							
15-12.02-17/2	Scheibe washer	1	1	-							
15-12.03-15/1	Sattelfeder saddle spring	1	1	1							
15-12.05-32/1	Scheibe washer	1	1	1							

2-253/10.1 **Leica M3-700 001...782 000** Leitz WETZLAR

estell-Nr art-No	Benennung Description	Leica - Modell M3	M2	M1
2-253.01- 79	Zahnrad gear	1	-	-
2-253.01- 80	Mitnehmer carrier	1	-	-
2-253.01- 83	Blende / light shield	1	1	1
2-253.01- 84	Plüschstreifen / plush strip	2	2	2
2-253.01-107	Abdichtplättchen sealing plate	1	1	-
2-253.01-115	Exzenter eccenter	1	1	-
2-253.01-374	Rückwickelknopf, kompl. m. 42-253.01-379 rewind knob, compl. with 42-253.01-379	1	-	-
2-253.01-375	Lager bearing	1	-	-
2-253.01-376	Hülse sleeve	1	-	-
2-253.01-377	Mitnehmer carrier	1	-	-
2-253.01-378	Feder spring	1	-	-
42-253.01-380	Dichtung washer	1	-	-
42-253.01-383	Schiebehülse slip sleeve	1	-	-
42-253.01-389	Rückspulachse rewind axis	1	-	-
42-253.01-420	Filzstreifen feld strip	1	1	1
42-253.01-611	Entfernungsmesser, mont. rangefinder, ass.	1	-	-
42-253.01-804	Deckscheibe, mont. cover plate, ass.	1	1	1
42-253.16- 1	Vorlaufwerk, kompl. selftimer, compl.	1	1	-
42-253.16- 39	Aufzugfeder winding spring	1	1	-
42-253.17- 25	Anschlagscheibe stop disc	1	1	-
42-253.17- 26	Exzenter eccenter	1	1	-
42-253.17- 41	Abdeckblech light shield	1	-	-
42-253.17- 67	Maskenverstellung, Untergruppe mask adjusting device, sub group	1	-	-
42-253.17- 71	Feder spring	1	-	-
42-253.17-128	Rollenhebel, mont. roller arm, ass.	1	1	-
AM2x2,8 DIN 84	Zylinderschraube, brüniert cylindrical head screw, burnished	2	2	2
M1,7x2,5LN 120 21	Zylinderschraube, brüniert cylindrical head screw, burnished	1	1	1
M2x3 LN 120 21	Zylinderschraube, brüniert cylindrical head screw, burnished	1	-	-
M2x4 LN 120 21	Zylinderschraube, brüniert cylindrical head screw, burnished	3	3	3
15-10.20- 8	Zylinderschraube, brüniert cylindrical head screw, burnished	2	2	2
15-10.20-11	Zylinderschraube, brüniert cylindrical head screw, burnished	2	2	-

TECHNISCHER KUNDENDIENST

25.10.66

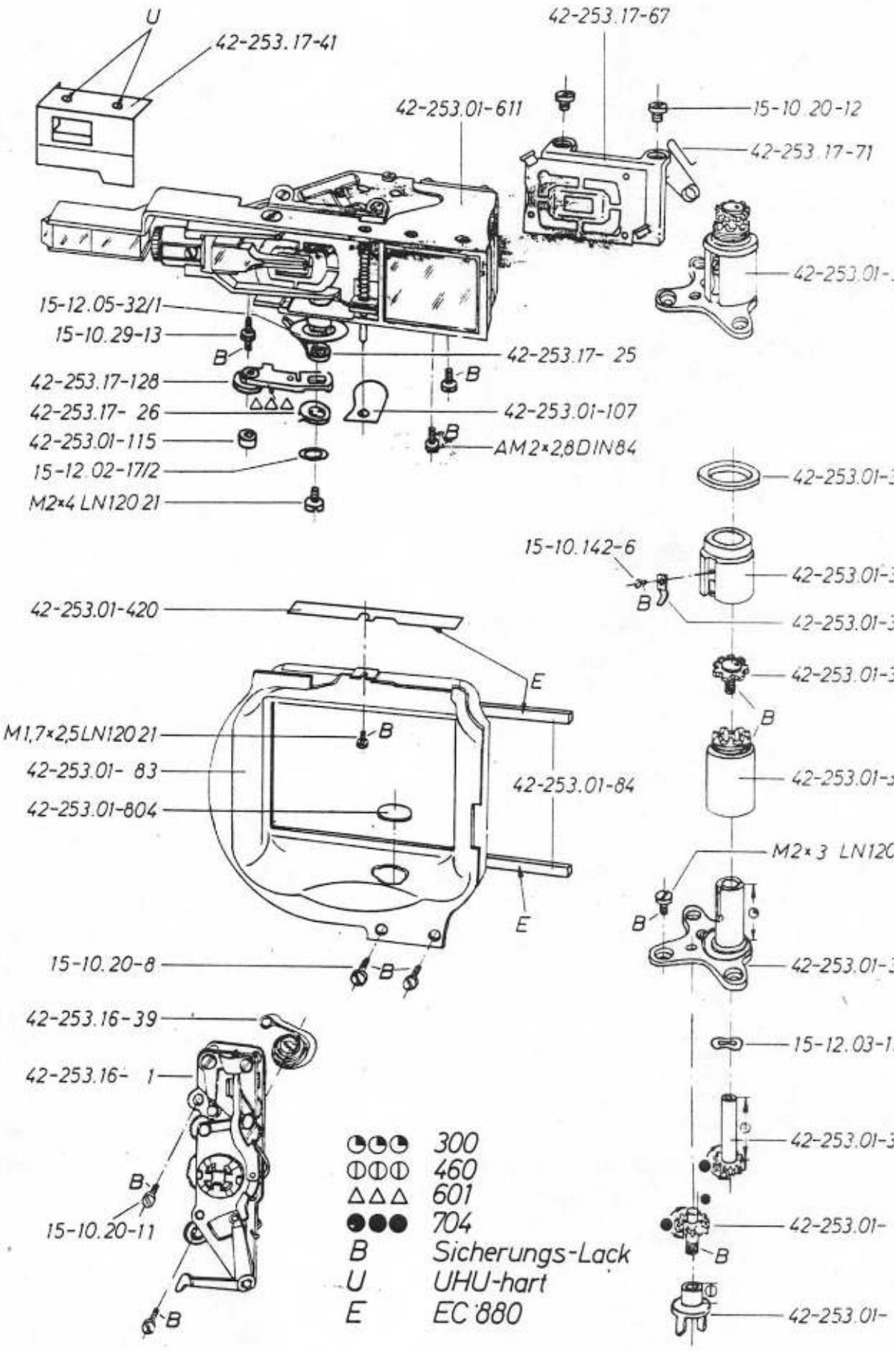

TECHNISCHER KUNDENDIENST

Leitz WETZLAR

Leica M3-782 001...

42-253/10

Bestell-Nr Part-No	Benennung Description	Leica - Modell M3	M2	M1							
15-12.03-15/1	Sattelfeder saddle spring	1	1	1							
15-12.05-32/1	Scheibe washer	1	1	-							

42-253/10.2 **Leica M3 - 782 001...** Leitz WETZLAR

Bestell-Nr Part-No	Benennung Description	Leica - Modell M3	M2	M1
42-253.01- 83	Blende / light shield	1	1	1
42-253.01- 84	Plüschstreifen / plush strip	2	2	2
42-253.01-107	Abdichtplättchen sealing plate	1	1	-
42-253.01-115	Exzenter / eccenter	1	1	-
42-253.01-420	Filzstreifen / feld strip	1	1	1
42-253.01-488	Lager, genietet bearing, riveted	1	1	1
42-253.01-489	Rückwickelknopf, kompl. m.42-253.01-498 42-253.01-499, 15-10.21-11 rewind knob, compl. with 42-253.01-498 42-253.01-499, 15-10.21-11	1	1	1
42-253.01-491	Rückspulachse rewind shaft	1	1	1
42-253.01-495	Mitnehmer carrier	1	1	1
42-253.01-496	Federrohr spring tube	1	1	1
42-253.01-497	Hülse sleeve	1	1	1
42-253.01-501	Zahnrad gear	1	1	1
42-253.01-502	Mitnehmer carrier	1	1	1
42-253.01-804	Deckscheibe, mont. cover plate, ass.	1	1	1
42-253.16- 1	Vorlaufwerk, kompl. selftimer, compl.	1	1	-
42-253.16- 39	Aufzugfeder winding spring	1	1	-
42-253.17- 1	Entfernungsmesser, mont. range finder, ass.	1	-	-
42-253.17- 25	Anschlagscheibe stop disc	1	1	-
42-253.17- 26	Exzenter eccenter	1	1	-
42-253.17- 41	Abdeckblech light shield	1	-	-
42-253.17- 67	Maskenverstellung, Untergruppe mask adjusting device, sub group	1	-	-
42-253.17- 71	Feder spring	1	-	-
42-253.17-128	Rollenhebel, mont. roller arm, ass.	1	1	-
AM2x2,8 DIN 84	Zylinderschraube cylindrical head screw	2	2	2
M1,7x2,5 LN12021	Zylinderschraube cylindrical head screw	1	1	1
M 2x4 LN 120 21	Zylinderschraube cylindrical head screw	3	3	3
15-10.20- 8	Schraube screw	2	2	2
15-10.20-11	Zylinderschraube cylindrical head screw	2	2	-
15-10.20-12	Zylinderschraube, brüniert cylindrical head screw, burnished	1	-	-
15-10.29-13	Schraube screw	1	1	-
15-12.02-17/2	Scheibe washer	1	1	-

TECHNISCHER KUNDENDIENST

25.10.66

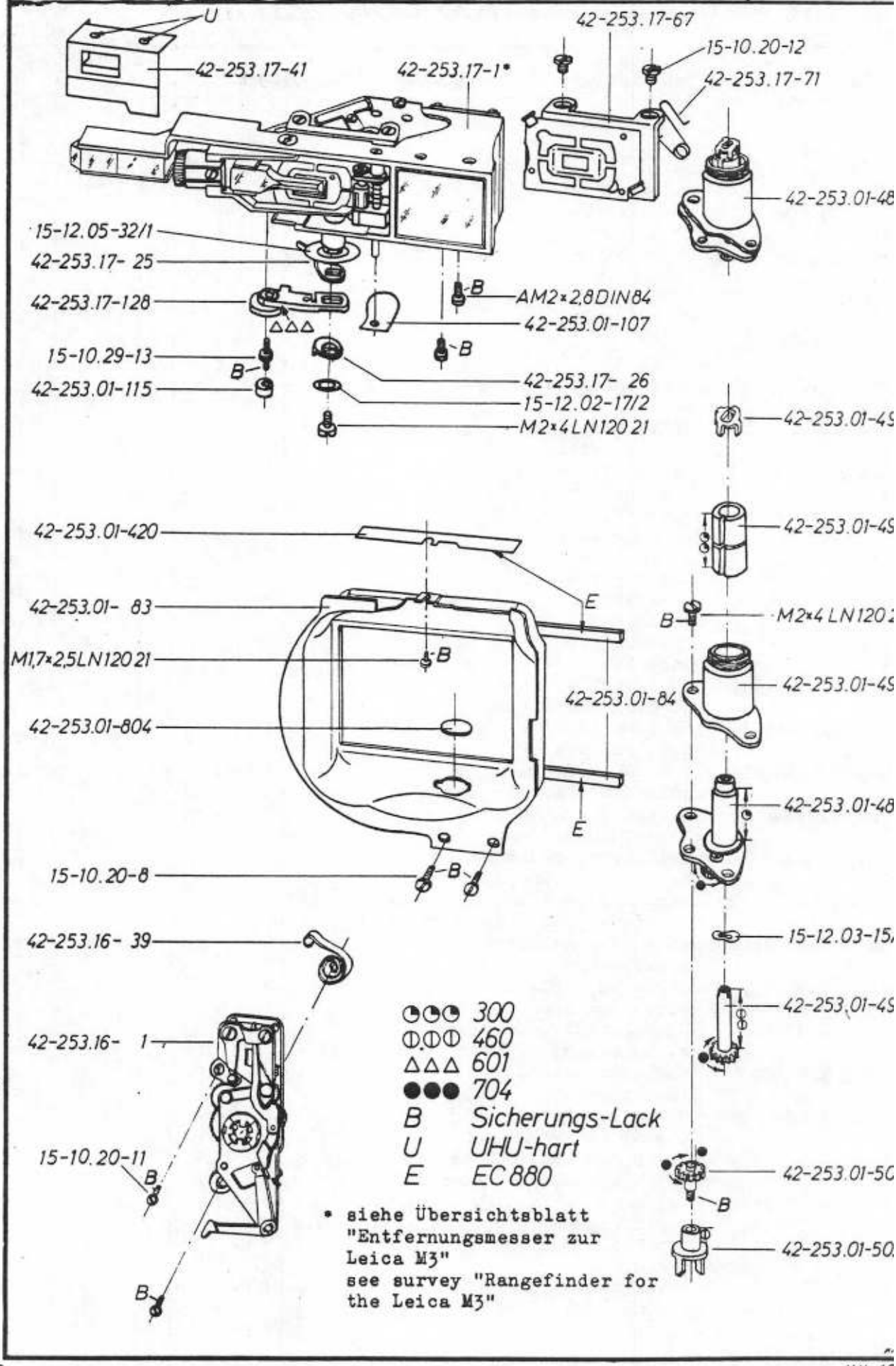

TECHNISCHER KUNDENDIENST

25.10.66

42-253/11.1	Leica M3-700 001...782 000	Ernst Leitz GmbH Wetzlar

Bestell-Nr Part-No	Benennung Description	Leica-Modell M3	M2	M1
42-253.01- 35	Auslöseknopf release knob	1	1	1
42-253.01- 38	Hülse sleeve	1	-	-
42-253.01- 40	Auslösestange release shaft	1	1	1
42-253.01- 47	Lagerbuchse bearing bushing	1	-	-
42-253.01-135	Antriebachse, mont. drive shaft, ass.	1	-	-
42-253.01-146	Index index disc	1	-	-
42-253.01-148	Dichtungsring sealing ring	1	-	-
42-253.01-158	Spiralfeder spiral spring	1	-	-
42-253.01-160	Transportring, mont. transport ring, ass.	1	-	-
42-253.01-165	Auslösebolzen, mont. release shaft, ass.	1	-	-
42-253.01-394	Haltewinkel, mont. angle bracket, ass.	1	-	-
42-253.01-395	Schaltklinke counting lever	1	-	-
42-253.01-396	Sperrklinke lock lever	1	-	-
42-253.01-512	Aufzugachse, mont. winding shaft, ass.	1	-	-
42-253.01-817	Zählscheibe counting disc	1	-	-
M1,4x1,4 DIN 553	Gewindestift, bruniert threaded pin, burnished	1	-	-
M1,7x2,5 LN120 21	Schraube, brüniert screw, burnished	1	-	-
M1,7 x 5 DIN 84	Zylinderschraube, brüniert fillister head cap screw, burnished	1	-	-
M 2 x 3 LN 120 21	Zylinderschraube, brüniert fillister head cap screw, burnished	3	3	3
M2,6x2x2 DIN 926	Schraube, brüniert screw, burnished	1	-	-
15-10.120- 5	Schraube, brüniert screw, burnished	2	-	-
15-10.174- 5	Senkschraube, brüniert c. s. screw, burnished	1	1	1
2,3 DIN 6799	Sicherungsscheibe lock washer	1	1	1
15-12.03-.19/4	Unterlegscheibe, nach Bedarf washer. when needed	2	2	2
15-12.04-14/1	Abstimmscheibe 0,06 mm, nach Bedarf adjusting washer 0.06 mm, when needed	1	-	-
15-12.04-14/9	Abstimmscheibe 0,03 mm, nach Bedarf adjusting washer 0.03 mm, when needed	1	-	-
15-12.06-18/1	Scheibe washer	1	-	-
15-12.07- 7/1	Feder spring	1	-	-

TECHNISCHER KUNDENDIENST

25.10.66

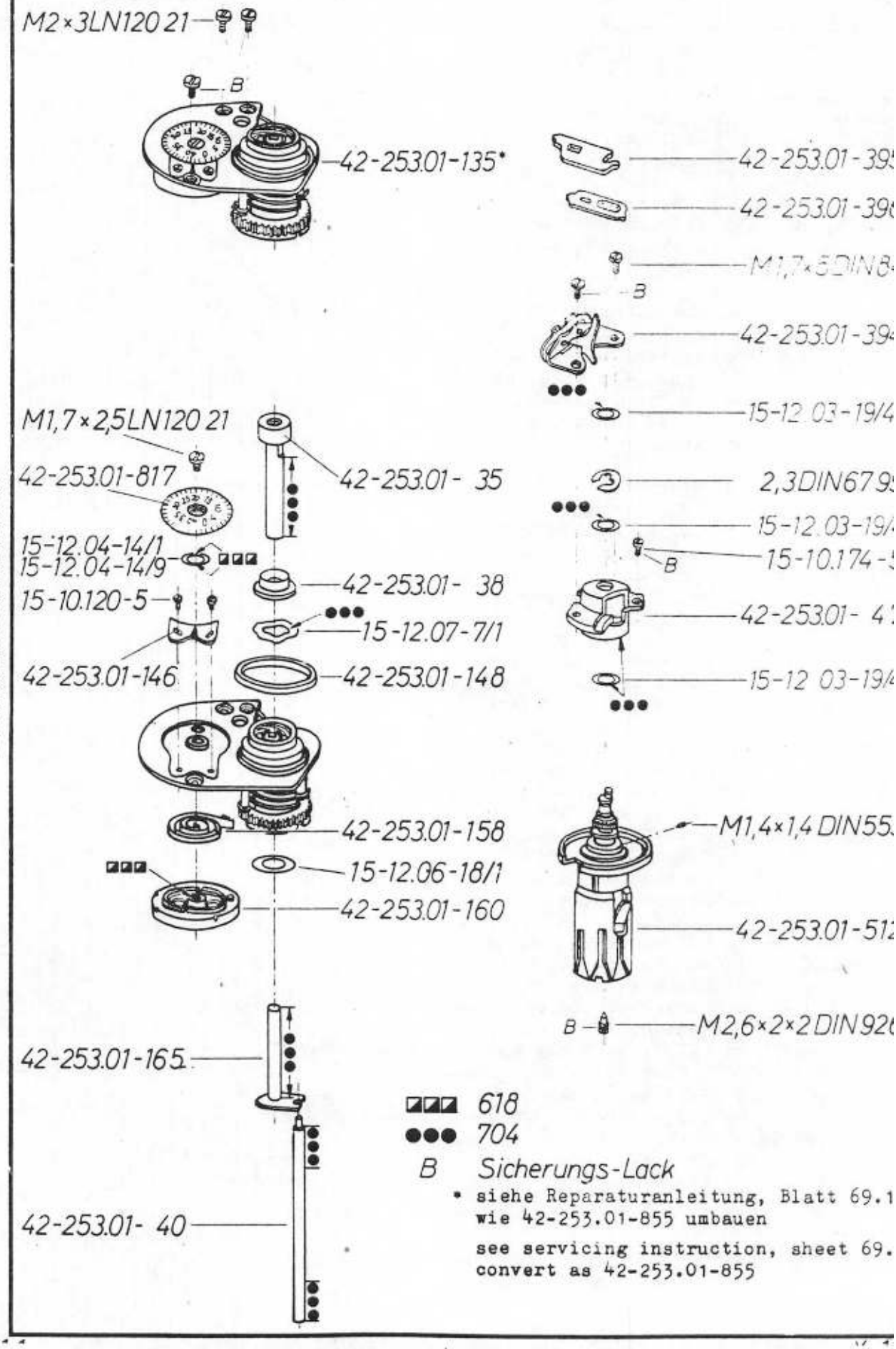

TECHNISCHER KUNDENDIENST

5.10.66

42-253/11.2 **Leica M3-782 001...919 250** Ernst Leitz GmbH Wetzlar

Bestell-Nr Part-No	Benennung Description	Leica-Modell M3	M2	M1
42-253.01- 35	Auslöseknopf release knob	1	1	1
42-253.01- 38	Hülse sleeve	1	-	-
42-253.01- 40	Auslösestange release shaft	1	1	1
42-253.01- 47	Lagerbuchse bearing bushing	1	-	-
42-253.01- 135	Antriebachse, mont. drive shaft, ass.	1	-	-
42-253.01- 146	Index index disc	1	-	-
42-253.01- 158	Spiralfeder spiral spring	1	-	-
42-253.01- 160	Transportring, mont. transport ring, ass.	1	-	-
42-253.01- 394	Haltewinkel, mont. angle bracket, ass.	1	-	-
42-253.01- 395	Schaltklinke counting lever	1	-	-
42-253.01- 396	Sperrklinke lock lever	1	-	-
42-253.01- 406	Auslösebolzen, mont. release shaft, ass.	1	1	1
42-253.01- 512	Aufzugachse, mont. winding shaft, ass.	1	-	-
42-253.01- 817	Zählscheibe counting disc	1	-	-
M1,4 x 1,4 DIN 553	Gewindestift, brüniert threaded pin, burnished	1	-	-
M1,7x2,5 LN 120 21	Schraube, brüniert screw, burnished	1	-	-
M 1,7 x 5 DIN 84	Zylinderschraube, brüniert fillister head cap screw, burnished	2	-	-
M 2 x 3 LN 120 21	Zylinderschraube, brüniert fillister head cap screw, burnished	3	3	3
M2,6x2x2 DIN 926	Schraube, brüniert screw, burnished	1	-	-
15-10.120- 5	Schraube, brüniert screw, burnished	2	-	-
15-10.174- 5	Senkschraube, brüniert C. S. screw, burnished	1	1	1
2,3 DIN 6799	Sicherungsscheibe lock washer	1	1	1
15-12.03-19/4	Unterlegscheibe, nach Bedarf washer, when needed	2	2	2
15-12.04-14/1	Abstimmscheibe 0,06 mm, nach Bedarf adjusting washer, when needed	1	-	-
15-12.04-14/9	Abstimmscheibe 0,03 mm, nach Bedarf adjusting washer, 0.03 mm, when needed	1	-	-
15-12.06-18/1	Scheibe washer	1	-	-
15-12.07- 7/1	Feder spring	1	-	-

TECHNISCHER KUNDENDIENST

25.10.66

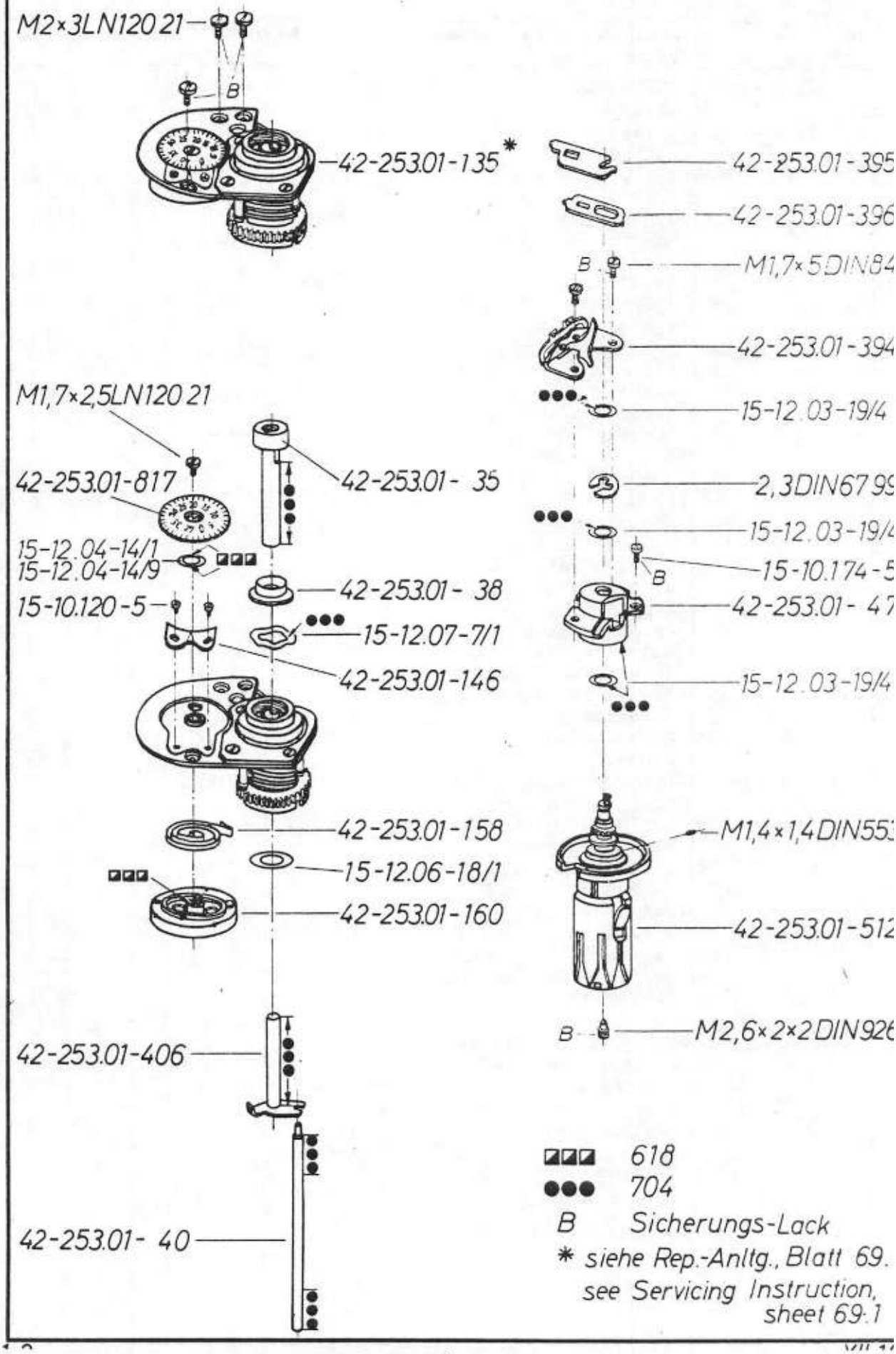

TECHNISCHER KUNDENDIENST

25.10.66

42-253/11.3	Leica M3-919 251...	Leitz WETZLAR

Bestell-Nr Part-No	Bezeichnung Description	Leica - Modell M3	M2	M1
42-582.01- 28	Auslöseknopf release knob	1	1	1
42-582.01- 39	Hülse sleeve	1	1	1
42-253.01- 40	Auslösestange release shaft	1	1	1
42-253.01- 47	Lagerbuchse bearing bushing	1	-	-
42-253.01-146	Index index disc	1	-	-
42-253.01-158	Spiralfeder spiral spring	1	-	-
42-253.01-160	Transportring, mont. transport ring, ass.	1	-	-
42-253.01-394	Haltewinkel, mont. angle bracket, ass.	1	-	-
42-253.01-395	Schaltklinke counting lever	1	-	-
42-253.01-396	Sperrklinke lock lever	1	-	-
42-253.01-406	Auslösebolzen, mont. release shaft, ass.	1	1	1
42-253.01-512	Aufzugachse, mont. winding shaft, ass.	1	-	-
42-253.01-817	Zählscheibe counting disc	1	-	-
42-253.01-855	Antriebachse, mont. drive shaft, ass.	1	-	-
M1,4x1,4 DIN 553	Gewindestift, brüniert threaded pin, burnished	1	-	-
M1,7x2,5 LN 120 21	Schraube, brüniert screw, burnished	1	-	-
M1,7x5 DIN 84	Zylinderschraube, brüniert fillister head cap screw, burnished	2	2	2
M 2 x 3 LN 120 21	Zylinderschraube, brüniert filister screw, brüniert	3	3	3
M2,6x2x2 DIN 926	Schraube, brüniert screw, burnished	1	-	-
15-10.120- 5	Schraube, brüniert screw, burnished	2	-	-
15-10.174- 5	Senkschraube, brüniert C. S. screw, burnished	1	1	1
2,3 DIN 6799	Sicherungsscheibe C. clip	1	-	-
15-12.03-19/4	Unterlegscheibe, nach Bedarf washer, when needed	2	2	2
15-12.04-14/1	Abstimmscheibe 0,06 mm, nach Bedarf adjusting washer, 0.06 mm, when needed	2	2	2
15-12.04-14/9	Abstimmscheibe 0,03 mm, nach Bedarf adjusting washer, 0.03 mm, when needed	2	2	2
15-12.06-18/1	Scheibe washer	1	-	-

TECHNISCHER KUNDENDIENST

10.66

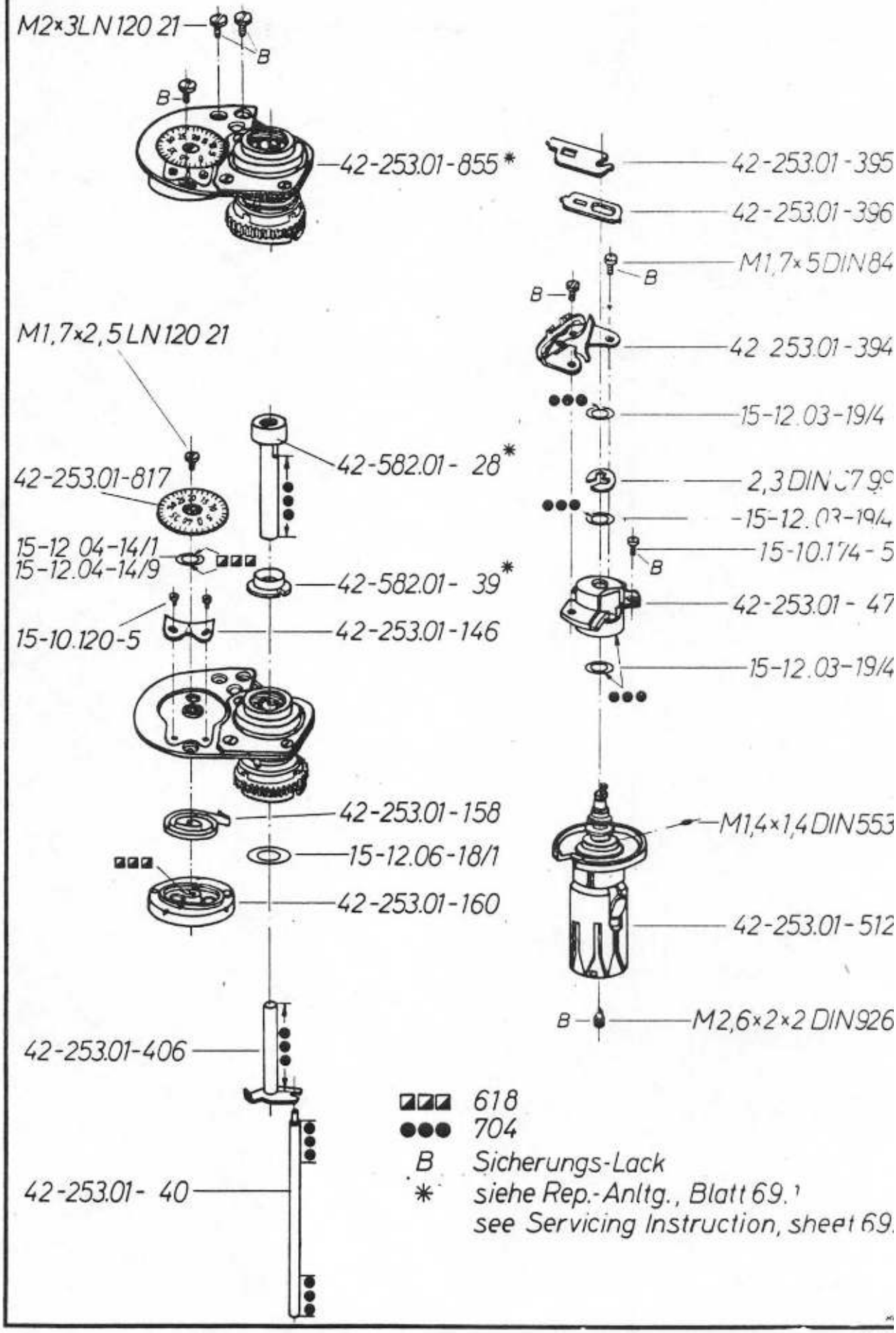

TECHNISCHER KUNDENDIENST

25.10.66

Ernst Leitz GmbH Wetzlar	Leica M3-700 001...953 900	42-253/12

Bestell-Nr Part-No	Benennung Description	Leica - Modell M3	M2	M1						
15-10.140-10	Schraube, brüniert screw, burnished	2	2	2						
15-10.173- 5	Achsschraube, brüniert shoulder screw, burnished	1	1	1						
M2x1,6 DIN 934	Sechskantmutter, gebeizt hexagon nut, corroded	1	1	1						
1,2 DIN 6799	Sicherungsscheibe c. clip	1	1	1						

42-253/12.1	Leica M3-700 001...953 900	Ernst Leitz GmbH Wetzlar

Bestell-Nr Part-No	Benennung Description	Leica - Modell M3	M2	M1							
42-253.01- 95	Schutzwinkel guide bracket	1	-	-							
42-253.01-424	Druckfeder pressure spring	1	1	1							
42-253.01-425	Isolierplatte insulation plate	1	1	1							
42-253.01-426	Kontaktfeder contact spring	1	1	1							
42-253.01-427	Isolierstück insulation plate	1	1	1							
42-253.01-430	Kabel 30 mm lang cable 30 mm long	1	1	1							
42-253.01-434	Drehungsfeder special spring	1	-	-							
42-253.01-436	Kupferdraht; ⌀ 0,2 copper wire	1	1	1							
42-253.01-439	Feder spring	1	1	1							
42-253.01-443	Blitzlichtstange, kompl. flash light shaft, compl.	1	-	-							
42-253.01-460	Isolierplatte insulation plate	1	1	1							
42-253.01-461	Kontaktfeder contact spring	1	1	1							
42-253.01-462	Isolierstück insulation plate	1	1	1							
42-253.01-463	Platte plate	1	1	1							
42-253.01-465	Isolierplatte insulation plate	1	1	1							
42-253.01-466	Kontaktfeder contact spring	1	-	-							
42-253.01-467	Isolierstück insulation plate	1	1	1							
42-253.01-468	Rohr tube	1	1	1							
42-253.01-470	Kabel 95 mm lang cable 95 mm long	1	1	1							
42-253.01-471	Kupferdraht ⌀ 0,2; 95 mm lang copper wire ⌀ 0,2; 95 mm long	1	1	1							
42-253.01-474	Isolierplättchen insulation plate	1	1	1							
42-253.01-478	Anschlußrahmen, mont. contact frame, ass.	1	1	1							
42-253.01-479	Zwischenstück intermediate plate	1	1	1							
42-253.01-484	Kontaktblech contact plate	1	1	1							
42-253.01-615	Blitzeinstellhebel, kompl. flash adjusting lever, compl.	1	1	1							
42-253.01-719	Kontaktniet, genietet contact rivet, riveted	2	2	2							
M1,7x2,8 LN 120 25	Schraube, brüniert screw, burnished	1	-	-							
M 2 x 6 LN 120 21	Zylinderschraube, brüniert fillister head cap screw, burnished	1	1	1							
15-10.140- 8	Zylinderschraube, brüniert fillister head cap screw, burnished	2	2	2							
15-10.140- 7	Zylinderschraube, brüniert fillister head cap screw, burnished	2	2	2							

12. 7.62

Ernst Leitz GmbH Wetzlar	Leica M3-700 001...953 900	42-253/12

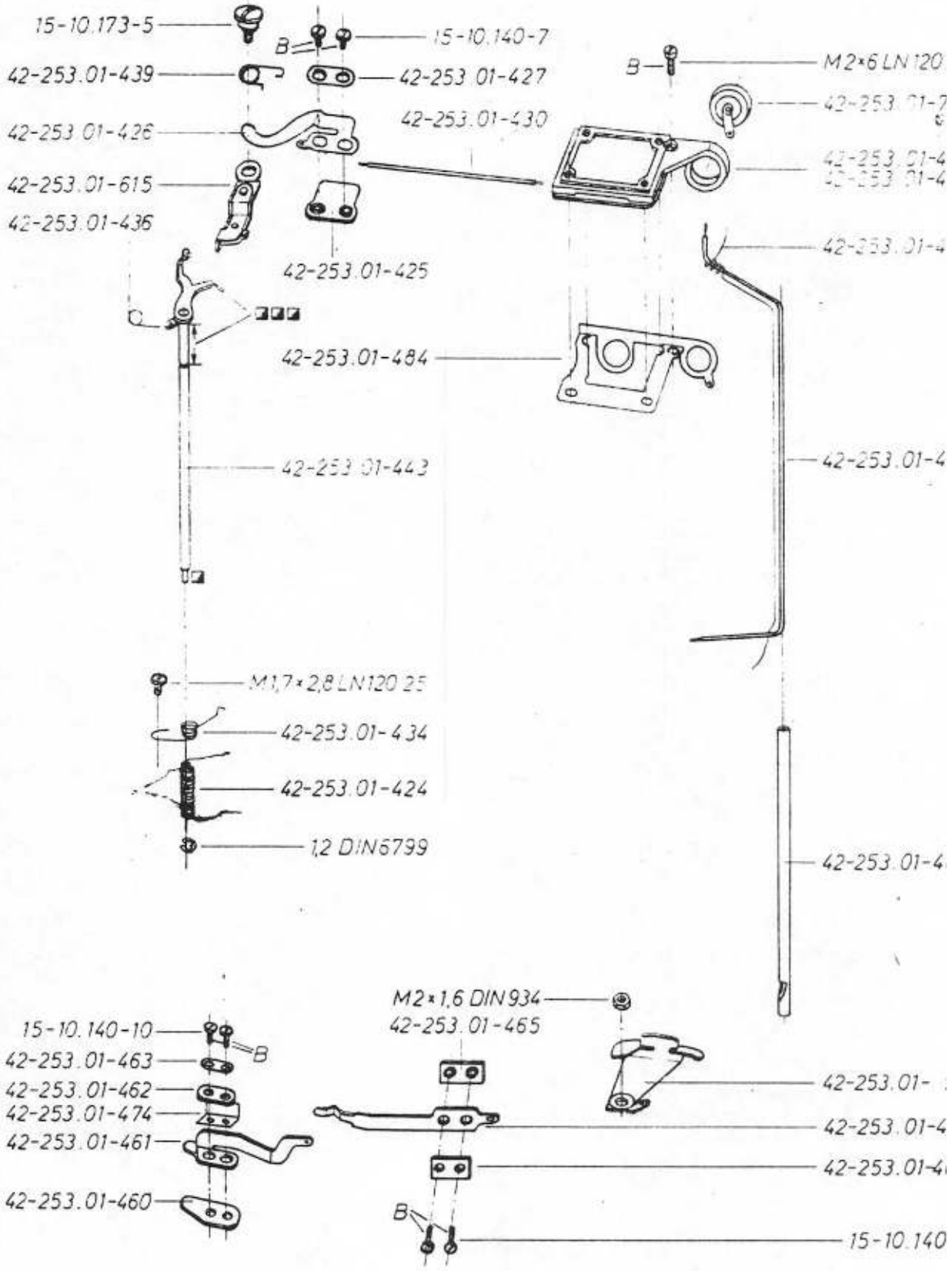

618
B Sicherungslack

12. 7.62

Ernst Leitz GmbH Wetzlar	Leica M3-953 901...	42-253/122

Bestell-Nr Part-No	Benennung Description	Leica - Modell M3	M2	M1							
15-10.173- 5	Achsschraube, brüniert shoulder screw, burnished	1	1	1							
M 2x1,6 DIN 934	Sechskantmutter, gebeizt hexagon nut, corroded	1	1	1							
1,2 DIN 6799	Idealscheibe C. clip	1	1	1							

42-253/12.2	Leica M3-953 901...	Ernst Leitz GmbH Wetzlar

Bestell-Nr Part-No	Benennung Description	Leica - Modell M3	M2	M1								
42-253.01- 95	Schutzwinkel special cover	1	-	-								
42-253.01-424	Druckfeder pressure spring	1	1	1								
42-253.01-425	Isolierplatte insulation plate	1	1	1								
42-253.01-426	Kontaktfeder contact spring	1	1	1								
42-253.01-427	Isolierstück insulation plate	1	1	1								
42-253.01-430	flexibles Kabel 30 mm lang flexible cable 30 mm long	1	1	1								
42-253.01-436	Kupferdraht; ⌀ 0,2 copper wire	1	1	1								
42-253.01-437	Drehungsfeder special spring	1	1	1								
42-253.01-439	Feder spring	1	1	1								
42-253.01-460	Isolierplatte insulation plate	1	1	1								
42-253.01-461	Kontaktfeder contact spring	1	1	1								
42-253.01-462	Isolierstück insulation plate	1	1	1								
42-253.01-463	Platte plate	1	1	1								
42-253.01-465	Isolierplatte insulation plate	1	1	1								
42-253.01-466	Kontaktfeder contact spring	1	-	-								
42-253.01-467	Isolierstück insulation plate	1	1	1								
42-253.01-468	Rohr tube	1	1	1								
42-253.01-470	Kabel 95 mm lang cable 95 mm long	1	1	1								
42-253.01-471	Kupferdraht ⌀ 0,2; 95 mm lang copper wire ⌀ 0,2; 95 mm long	1	1	1								
42-253.01-474	Isolierplättchen insulation plate	1	1	1								
42-253.01-478	Anschlußrahmen, mont. contact frame, ass.	1	1	1								
42-253.01-479	Zwischenstück intermediate plate	1	1	1								
42-253.01-484	Kontaktblech contact plate	1	1	1								
42-253.01-615	Blitzeinstellhebel, kompl. flash adjusting lever, compl.	1	1	1								
42-253.01-703	Blitzlichtstange, kompl. flash light shaft, compl.	1	1	1								
42-253.01-719	Kontaktniet, genietet contact rivet, riveted	2	2	2								12. 7.62
M 2 x 6 LN 120 21	Zylinderschraube, brüniert filister screw, burnished	1	1	1								
15-10.140- 7	Zylinderschraube, brüniert filister screw, burnished	2	2	2								
15-10.140- 8	Zylinderschraube, brüniert filister screw, burnished	2	2	2								
15-10.140-10	Schraube, brüniert screw, burnished	2	2	2								

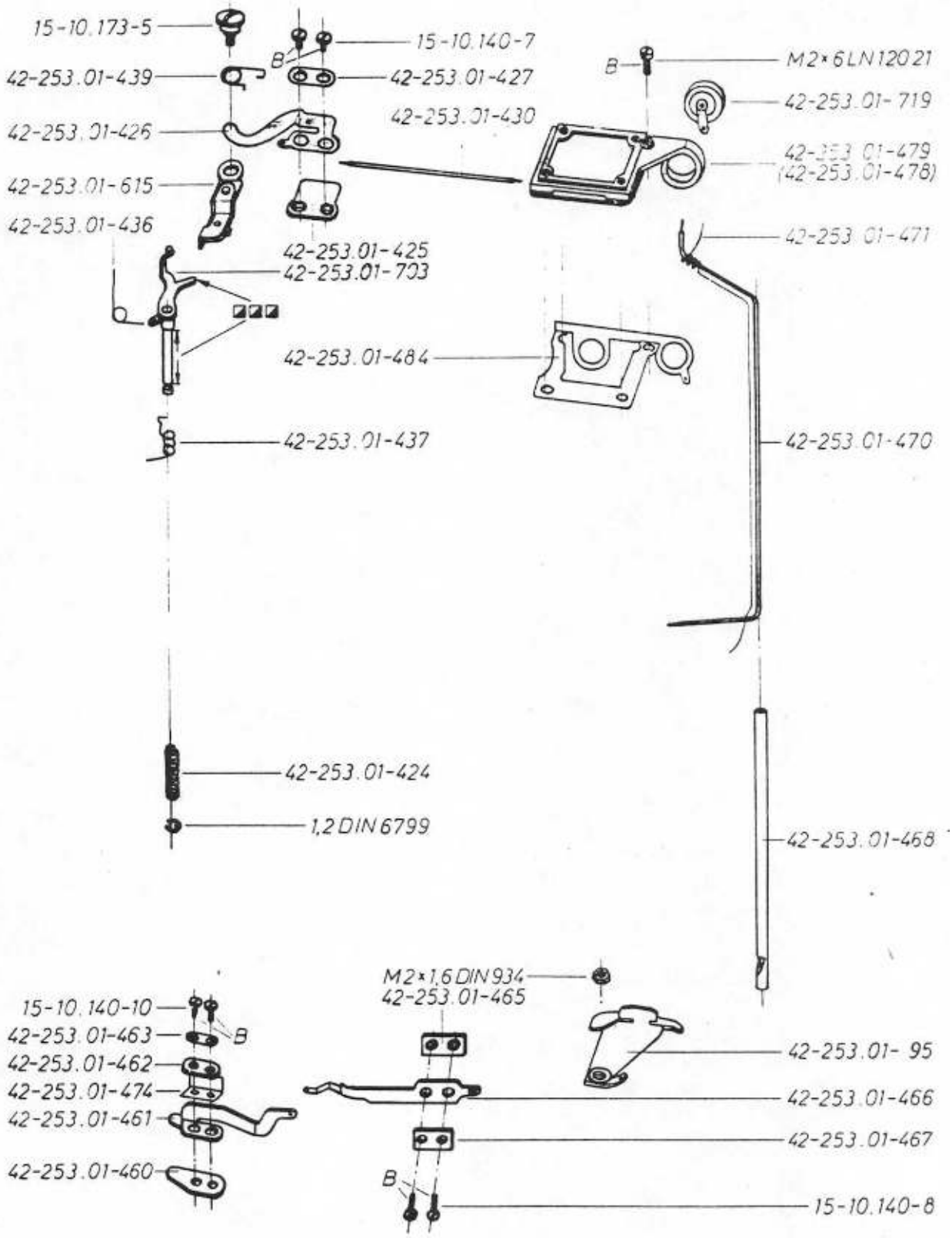

12. 7.62

618
B Sicherungslack

Ernst Leitz GmbH Wetzlar	Leica M3-963 001...	42-253/12

Bestell-Nr Part-No	Benennung Description	Leica - Modell M3	M2	M1
15-10.140-10	Schraube, brüniert screw, burnished	2	2	2
15-10.173- 5	Achsschraube, brüniert shoulder screw, burnished	1	1	1
M2 x 1,6 DIN 934	Sechskantmutter, gebeizt hexagon nut, corroded	1	1	1
1,2 DIN 6799	Sicherungsscheibe C. clip	1	1	1

42-253/12.3	Leica M3-963 001...	Ernst Leitz GmbH Wetzlar

Bestell-Nr Part-No	Benennung Description	Leica - Modell M3	M2	M1							
42-253.01-424	Druckfeder pressure spring	1	1	1							
42-253.01-425	Isolierplatte insulation plate	1	1	1							
42-253.01-426	Kontaktfeder contact spring	1	1	1							
42-253.01-427	Isolierstück insulation plate	1	1	1							
42-253.01-430	Kabel 30 mm lang cable 30 mm long	1	1	1							
42-253.01-436	Kupferdraht; ⌀ 0,2 copper wire	1	1	1							
42-253.01-437	Drehungsfeder special spring	1	1	1							
42-253.01-439	Feder spring	1	1	1							
42-253.01-460	Isolierplatte insulation plate	1	1	1							
42-253.01-461	Kontaktfeder contact spring	1	1	1							
42-253.01-462	Isolierstück insulation plate	1	1	1							
42-253.01-463	Platte plate	1	1	1							
42-253.01-465	Isolierplatte insulation plate	1	1	1							
42-253.01-467	Isolierstück insulation plate	1	1	1							
42-253.01-468	Rohr tube	1	1	1							
42-253.01-470	Kabel 95 mm lang cable 95 mm long	1	1	1							
42-253.01-471	Kupferdraht ⌀ 0,2; 95 mm lang copper wire ⌀ 0,2; 95 mm long	1	1	1							
42-253.01-474	Isolierplättchen insulation plate	1	1	1							
42-253.01-478	Anschlußrahmen, mont. contact frame, ass.	1	1	1							
42-253.01-479	Zwischenstück intermediate plate	1	1	1							
42-253.01-484	Kontaktblech contact plate	1	1	1							
42-253.01-615	Blitzeinstellhebel, kompl. flash adjusting lever, compl.	1	1	1							
42-253.01-703	Blitzlichtstange, kompl. flash light shaft, compl.	1	1	1							
42-253.01-719	Kontaktniet, genietet contact rivet, riveted	2	2	2							
42-582.01- 31	Schutzwinkel special cover	1	1	1							
42-582.01-311	Kontaktfeder contact spring	1	1	1							
M2x2,5 DIN 84	Schraube, brüniert screw, burnished	1	1	1							
M2 x 6 LN 120 21	Zylinderschraube, brüniert filister screw, burnished	1	1	1							
15-10.140- 8	Zylinderschraube, brüniert filister screw, burnished	2	2	2							
15-10.140- 7	Zylinderschraube, brüniert filister screw, burnished	2	2	2							

12. 7.62

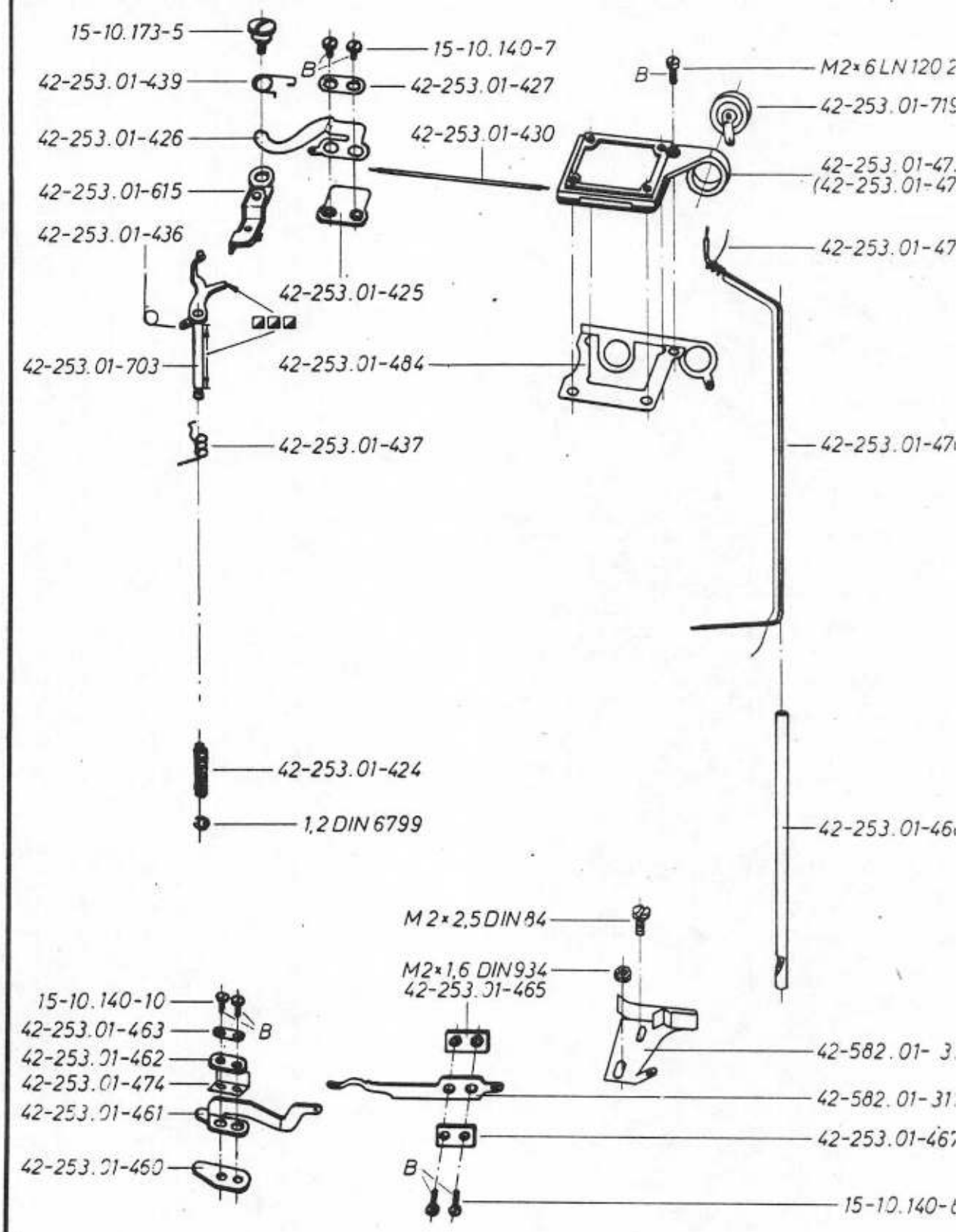
15-10.173-5
15-10.140-7
42-253.01-439
42-253.01-427
42-253.01-426
42-253.01-430
42-253.01-615
42-253.01-436
42-253.01-425
42-253.01-703
42-253.01-484
42-253.01-437
42-253.01-424
1,2 DIN 6799
M2×6 LN 120 2
42-253.01-719
42-253.01-47.
(42-253.01-47
42-253.01-47
42-253.01-47
42-253.01-46
M 2×2,5 DIN 84
M2×1,6 DIN 934
42-253.01-465
15-10.140-10
42-253.01-463
42-253.01-462
42-253.01-474
42-253.01-461
42-253.01-460
42-582.01- 3
42-582.01-31
42-253.01-467
15-10.140-
B
618
Sicherungslack

12. 7.62

42-253/13.1	Leica M3 - 700 001...782 000	Leitz WETZLAR

Bestell-Nr Part-No	Benennung Description	Leica - Modell M3										
42-253.01- 44	Ring ring	1										
42-253.01- 50	Hülse sleeve	1										
42-253.01- 54	Achse shaft	1										
42-253.01- 55	Feder spring	1										
42-253.01- 56	Anschlaghebel stop lever	1										
42-253.01- 57	Achse shaft	1										
42-253.01- 58	Feder spring	1										
42-253.01- 60	Zwischenring intermediate ring	1										
42-253.01-287	Einstellhebel, mont. adjusting lever, ass.	1										
42-253.01-297	Feder spring	1										
42-253.01-309	Platte, kompl. bearing plate, compl.	1										
42-253.01-313	Einstellkurve setting cam	1										
42-253.01-314	Zwischenlage intermediate ring	1										
42-253.01-328	Ausrückhebel, mont. release lever, ass.	1										
42-253.01-825	Hebel lever	1										
42-253.01-826	Feder spring	1										
42-253.15- 1	Hemmwerk, komplett slow speed, complete	1										
42-253.23- 1	Hemmwerk, kompl. slow speed, compl.	1										
M 2 x 3 LN 120 21	Zylinderschraube cylindrical head screw	2										
15-10.144- 7	Senkschraube countersunk screw	2										
15-10.170- 6	Schraube screw	1										
15-10.21 - 9	Lagerschraube bearing screw	1										
15-10.230-6	Halteschraube, verchromt screw, chrome-plated	1										
M 2 DIN 934	Sechskantmutter hexagon nut	1										
1,5 DIN 6799	Idealscheibe C. clip	2										
15-12.02-13/2	Unterlegscheibe washer	1										

TECHNISCHER KUNDENDIENST

25.10.66

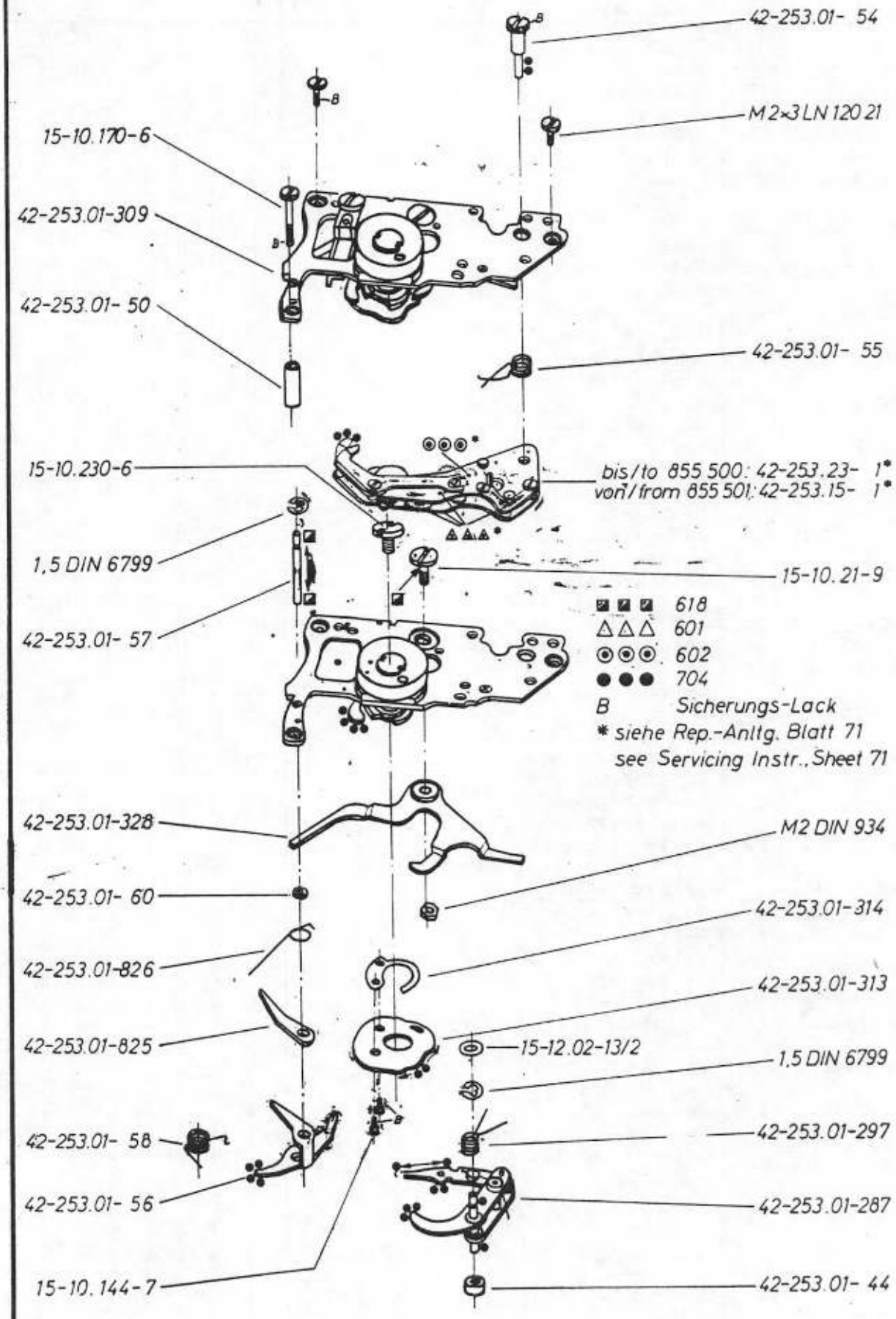

TECHNISCHER KUNDENDIENST

25.10.66

42-253/13.2	Leica M3-782 001...854 000	Leitz WETZLAR

Bestell-Nr Part-No	Benennung Description	Leica - Modell M3									
42-253.01- 44	Ring ring	1									
42-253.01- 50	Hülse sleeve	1									
42-253.01- 54	Achse shaft	1									
42-253.01- 55	Feder spring	1									
42-253.01- 57	Achse shaft	1									
42-253.01- 58	Feder spring	1									
42-253.01- 60	Zwischenring intermediate ring	1									
42-253.01-129	Anschlaghebel stop lever	1									
42-253.01-287	Einstellhebel, mont. adjusting lever, ass.	1									
42-253.01-297	Feder spring	1									
42-253.01-309	Platte, kompl. bearing plate, compl.	1									
42-253.01-313	Einstellkurve setting cam	1									
42-253.01-314	Zwischenlage intermediate ring	1									
42-253.01-328	Ausrückhebel, mont. release lever, ass.	1									
42-253.01-825	Hebel lever	1									
42-253.01-826	Feder spring	1									
42-253.15- 1	Hemmwerk, kompl. slow speed, compl.	1									
42-253.23- 1	Hemmwerk, kompl. slow speed, compl.	1									
M 2 x 3 LN 120 21	Zylinderschraube cylindrical head screw	2									
15-10.144- 7	Senkschraube countersunk screw	2									
15-10.170- 6	Schraube screw	1									
15-10.21 - 9	Lagerschraube bearing screw	1									
15-10.230-6	Halteschraube, verchromt screw, chrome-plated	1									
M 2 DIN 934	Sechskantmutter hexagon nut	1									
1,5 DIN 6799	Idealscheibe C. clip	2									
15-12.02-13/2	Unterlegscheibe washer	1									

TECHNISCHER KUNDENDIENST

25.10.66

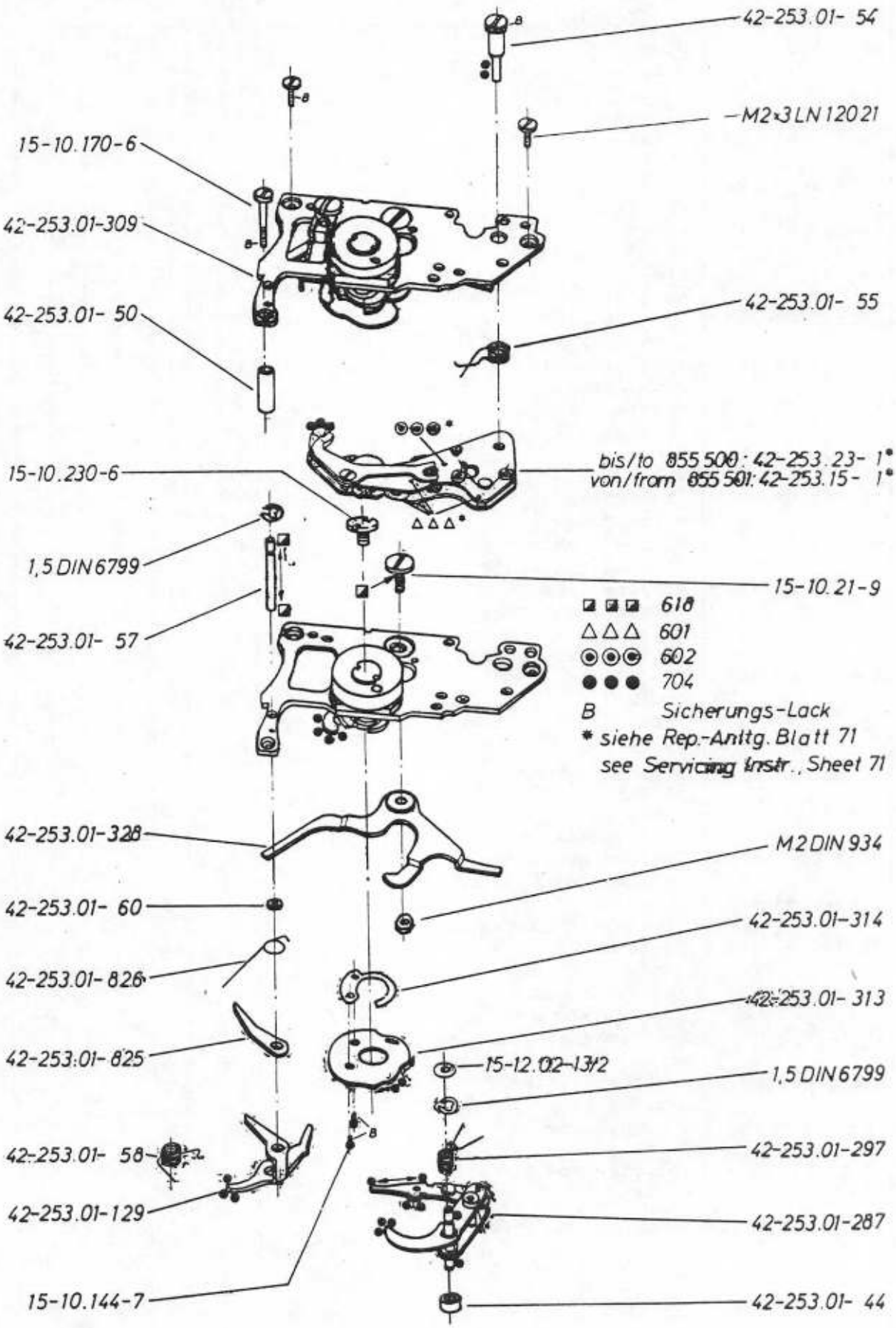

TECHNISCHER KUNDENDIENST

25.10.66

42-253/13.3	Leica M3-854 001...963 000	Leitz WETZLAR

Bestell-Nr Part-No	Benennung Description	Leica - Modell M3	M2	M1
42-253.01- 44	Ring ring	1	1	1
42-253.01- 50	Hülse sleeve	1	1	1
42-253.01- 54	Achse shaft	1	1	1
42-253.01- 55	Feder spring	1	1	1
42-253.01- 57	Achse shaft	1	1	1
42-253.01- 58	Feder spring	1	1	1
42-253.01- 60	Zwischenring intermediate ring	1	1	1
42-253.01-129	Anschlaghebel stop lever	1	1	1
42-253.01-287	Einstellhebel, mont. adjusting lever, ass.	1	1	1
42-253.01-297	Feder spring	1	1	1
42-253.01-305	Einstellkurve setting cam	1	1	1
42-253.01-308	Platte, kompl. bearing plate, compl.	1	1	1
42-253.01-314	Zwischenlage intermediate ring	1	1	1
42-253.01-328	Ausrückhebel, mont. release lever, ass.	1	1	1
42-253.01-825	Hebel lever	1	1	1
42-253.01-826	Feder spring	1	1	1
42-253.15- 1	Hemmwerk, kompl. slow speed, compl.	1	1	1
42-253.23- 1	Hemmwerk, kompl. slow speed, compl.	1	-	-
M 2 x 3 LN 120 21	Zylinderschraube cylindrical head screw	2	2	2
15-10.144- 7	Senkschraube countersunk screw	2	2	2
15-10.170- 6	Schraube screw	1	1	1
15-10.21 - 9	Lagerschraube bearing screw	1	1	1
15-10.230-6	Halteschraube, verchromt screw, chrome-plated	1	1	1
M 2 DIN 934	Sechskantmutter hexagon nut	1	1	1
1,5 DIN 6799	Idealscheibe C. clip	2	2	2
15-12.02-13/2	Unterlegscheibe washer	1	1	1

TECHNISCHER KUNDENDIENST

25.10.66

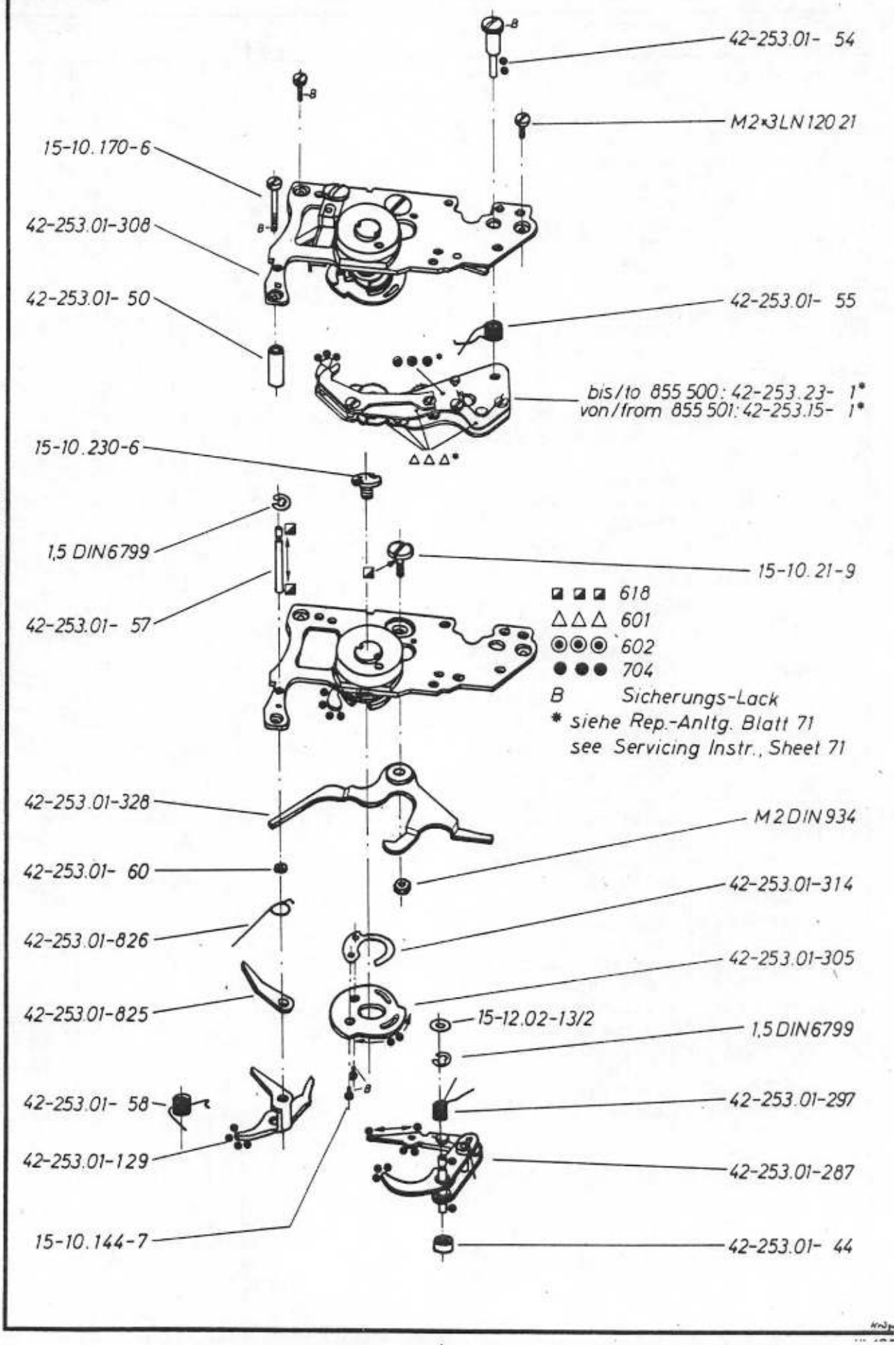

TECHNISCHER KUNDENDIENST

25.10.66

42-253/13.4	Leica M3-963 001...	Leitz WETZLAR

Bestell-Nr Part-No	Benennung Description	Leica - Modell M3	M2	M1							
42-253.01- 44	Ring ring	1	1	1							
42-253.01- 50	Hülse sleeve	1	1	1							
42-253.01- 54	Achse shaft	1	1	1							
42-253.01- 55	Feder spring	1	1	1							
42-253.01- 57	Achse shaft	1	1	1							
42-253.01- 58	Feder spring	1	1	1							
42-253.01- 60	Zwischenring intermediate ring	1	1	1							
42-253.01-129	Anschlaghebel stop lever	1	1	1							
42-253.01-287	Einstellhebel, mont. adjusting lever, ass.	1	1	1							
42-253.01-297	Feder spring	1	1	1							
42-253.01-302	Platte, kompl. bearing plate, compl.	1	1	1							
42-253.01-305	Einstellkurve setting cam	1	1	1							
42-253.01-314	Zwischenlage intermediate ring	1	1	1							
42-253.01-328	Ausrückhebel, mont. release lever, ass.	1	1	1							
42-253.01-825	Hebel lever	1	1	1							
42-253.01-826	Feder spring	1	1	1							
42-253.15- 1	Hemmwerk, kompl. slow speed, compl.	1	1	1							
M 2 x 3 LN 120 21	Zylinderschraube cylindrical head screw	2	2	2							
15-10.144- 7	Senkschraube countersunk screw	2	2	2							
15-10.170- 6	Schraube screw	1	1	1							
15-10.21 - 9	Lagerschraube bearing screw	1	1	1							
15-10.230-6	Halteschraube, verchromt screw, chrome-plated	1	1	1							
M 2 DIN 934	Sechskantmutter hexagon nut	1	1	1							
1,5 DIN 6799	Sicherungsscheibe C. clip	2	2	2							
15-12.02-13/2	Unterlegscheibe washer	1	1	1							

TECHNISCHER KUNDENDIENST

25.10.66

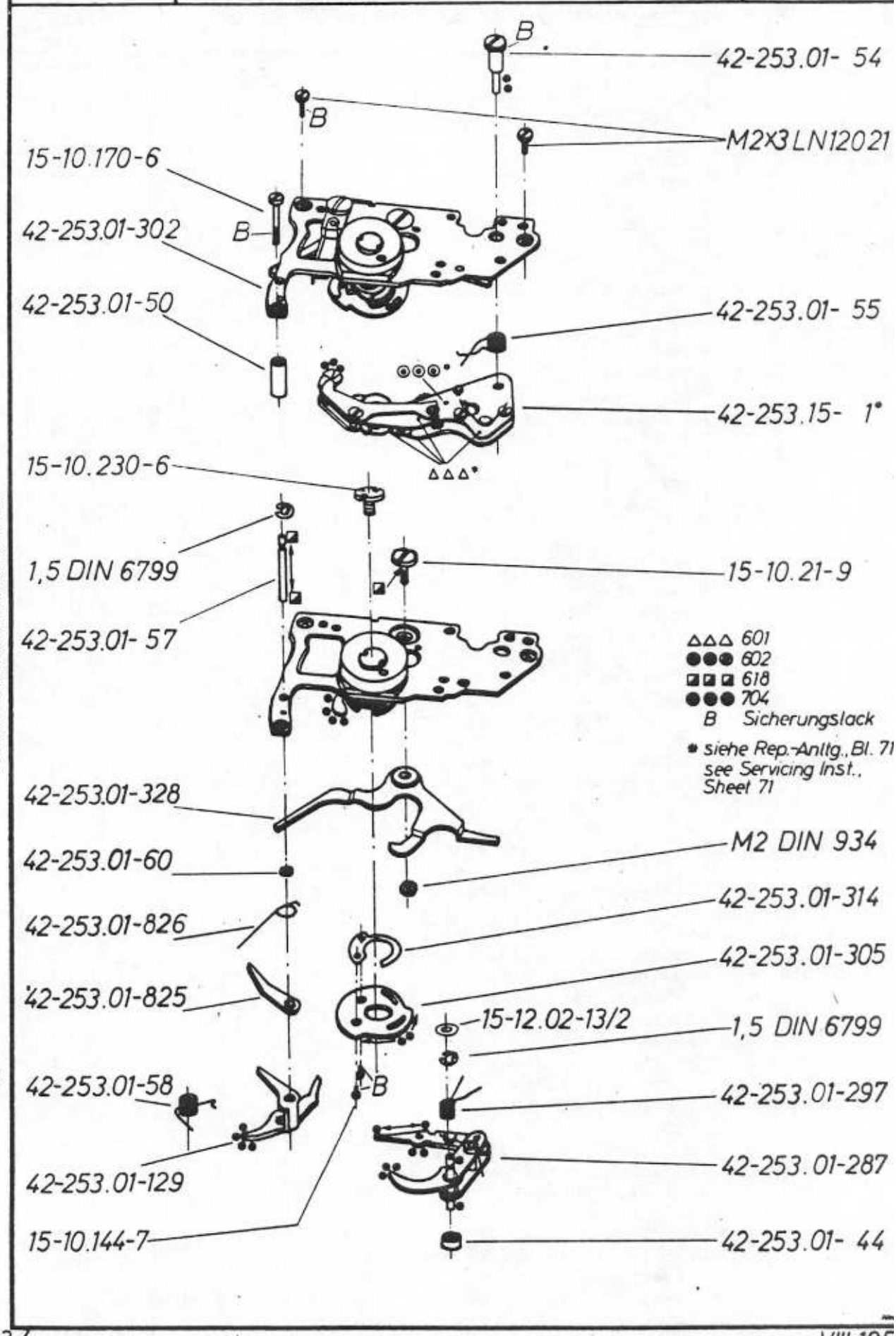

TECHNISCHER KUNDENDIENST

25.10.66

42-253/14.1	Leica M3 - 700 001...708 000	Leitz WETZLAR

Bestell-Nr Part-No	Benennung Description	Leica - Modell M3	M2	M1							
42-253.01- 16	Filmtransportwalze, kompl. sprocket wheel, compl.	1	-	-							
42-253.01- 28	Ritzel intermediate gear	1	1	1							
42-253.01- 30	Anschlagscheibe stop disc	1	1	1							
42-253.01- 31	Mutter nut	1	1	1							
42-253.01- 53	Feder spring	1	-	-							
42-253.01- 78	Klemmleiste locking plate	1	1	1							
42-253.01- 90	Deckplatte cover plate	1	1	1							
42-253.01-121	Blattfeder, mont. flat spring, ass.	1	1	1							
42-253.01-281	Sperrhebel, mont. arresting lever, ass.	1	1	1							
42-253.01-429	Isolierhaube insulation cap	1	1	1							
42-253.01-816	Zwischenlage, bei Bedarf intermediate plate, when needed	1	1	1							
42-253.01-821	Stützwinkel angle bracket	1	1	1							
42-253.01-992	Aufzugachse, mont. winding shaft, ass.	1	-	-							
42-582.01- 18	Achse, mont. shaft, ass.	1	1	1							
M 2 x 2,5 DIN 84	Zylinderschraube, brüniert cylindrical head screw, burnished	1	-	-							
AM 2 x 4 DIN 84	Zylinderschraube, brüniert cylindrical head screw, burnished	1	1	1							
M 2 x 3 LN 120 21	Zylinderschraube, brüniert cylindrical head screw, burnished	1	1	1							
M 2 x 6,3 LN 120 21	Zylinderschraube, Neusilber cylindrical head screw, german silber	1	1	1							
M1,7x3,5 LN 120 25	Linsenschraube, schwarz halb matt oval head screw, black semi mat	2	2	2							
15-10.144- 8	Senkschraube, brüniert countersunk screw, burnished	2	2	2							
15-10.174- 5	Senkschraube, brüniert countersunk screw, burnished	1	1	1							
15-10.174- 7	Schraube, schwarz halbmatt screw, black semi mat	1	1	1							
15-10.175- 7	Schraube, brüniert screw, burnished	1	1	1							
15-10.21 -14	Schraube, brüniert screw, burnished	1	-	-							
15-10.29 -14	Justierschraube, brüniert adjusting screw, burnished	1	1	1							
15-11.25 - 5	Mutter, brüniert nut, burnished	1	1	1							
15-12.03-21/1	Unterlegscheibe 0,2 mm, bei Bedarf washer 0.2 mm thick, when needed	1	1	1							
15-12.03-21/2	Unterlegscheibe 0,1 mm, bei Bedarf washer 0.1 mm thick, when needed	1	1	1							
15-12.03-21/3	Unterlegscheibe 0,06 mm, bei Bedarf washer 0.06 mm thick, when needed	1	1	1							

TECHNISCHER KUNDENDIENST

25.10.66

*Einzelteile siehe Bl. 14.2
single parts see sh. 14.2

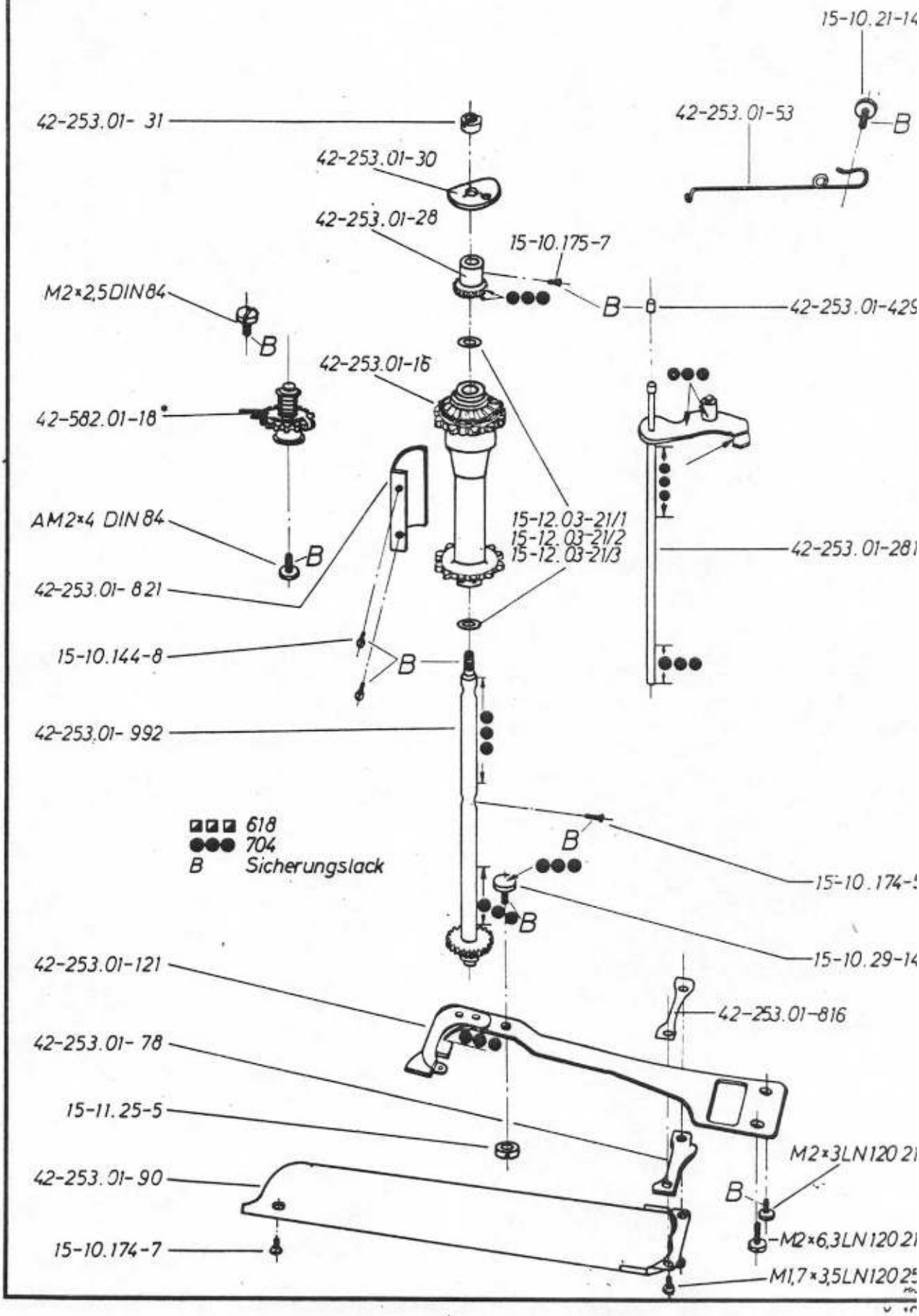

TECHNISCHER KUNDENDIENST

25.10.66

Ernst Leitz GmbH Wetzlar

Leica M3-708 001...746 500

42-253/14.2

Bestell-Nr Part-No	Benennung Description	Leica - Modell M3	M2	M1							
15-12.03 -21/1	Unterlegscheibe 0,2 mm, bei Bedarf washer 0.2 mm thick, when needed	1	1	1							
15-12.03-21/2	Unterlegscheibe 0,1 mm, bei Bedarf washer 0.1 mm thick, when needed	1	1	1							
15-12.03-21/3	Unterlegscheibe 0,06 mm, bei Bedarf washer 0.06 mm thick, when needed	1	1	1							
1,5 DIN 6799	Sicherungsscheibe C. clip	1	1	1							

42-253/14.2	Leica M3 - 708 001...746 500	Leitz WETZLAR

Bestell-Nr Part-No	Benennung Description	Leica - Modell M3	M2	M1
42-253.01- 16	Filmtransportwalze, kompl. sprocket wheel, compl.	1	1	1
42-253.01- 28	Ritzel intermediate gear	1	1	1
42-253.01- 30	Anschlagscheibe stop disc	1	1	1
42-253.01- 31	Mutter nut	1	1	1
42-253.01- 33	Zahnrad gear	1	1	1
42-253.01- 41	Sperrklinke lock lever	1	-	-
42-253.01- 53	Feder spring	1	-	-
42-253.01- 78	Klemmleiste locking plate	1	1	1
42-253.01- 90	Deckplatte cover plate	1	1	1
42-253.01-121	Blattfeder, mont. flat spring, ass.	1	1	1
42-253.01-130	Aufzugachse, mont. winding shaft, ass.	1	1	1
42-253.01-281	Sperrhebel, mont. arresting lever, ass.	1	1	1
42-253.01-429	Isolierhaube insulation cap	1	1	1
42-253.01-816	Zwischenlage, bei Bedarf intermediate plate, when needed	1	1	1
42-253.01-821	Stützwinkel / angle bracket	1	1	1
42-253.01-824	Anschlagscheibe stop disc	1	1	1
42-582.01- 18	Achse, mont. / shaft, ass.	1	1	1
42-582.01- 22	Achse / shaft	1	1	1
42-582.01- 24	Druckfeder / pressure spring	1	1	1
AM 2x4 DIN 84	Zylinderschraube, brüniert cylindrical head screw, burnished	1	1	1
M1,7x3,5LN12025	Linsenschraube, Neusilber oval head screw, german silver	1	1	1
M 2x3 LN 120 21	Zylinderschraube, brüniert cylindrical head screw, burnished	1	1	1
M 2 x 6,3 LN 120 21	Zylinderschraube cylindrical head screw	1	1	1
15-10.144- 8	Senkschraube, brüniert C. S. screw, burnished	2	2	2
15-10.174- 5	Senkschraube, brüniert C. S. screw, burnished	1	1	1
15-10.174- 7	Schraube, schwarz halbmatt screw, black semi mat	1	1	1
15-10.175- 7	Schraube, brüniert screw, burnished	1	1	1
15-10.179- 7	Schraube, brüniert screw, burnished	1	-	-
15-10.21 -14	Schraube, brüniert screw, burnished	1	-	-
15-10.29 -14	Justierschraube, brüniert adjusting screw, burnished	1	1	1
15-11.25 - 5	Mutter, brüniert nut, burnished	1	1	1
15-12.02 -28/1	Unterlegscheibe washer	1	1	1

TECHNISCHER KUNDENDIENST

25.10.6

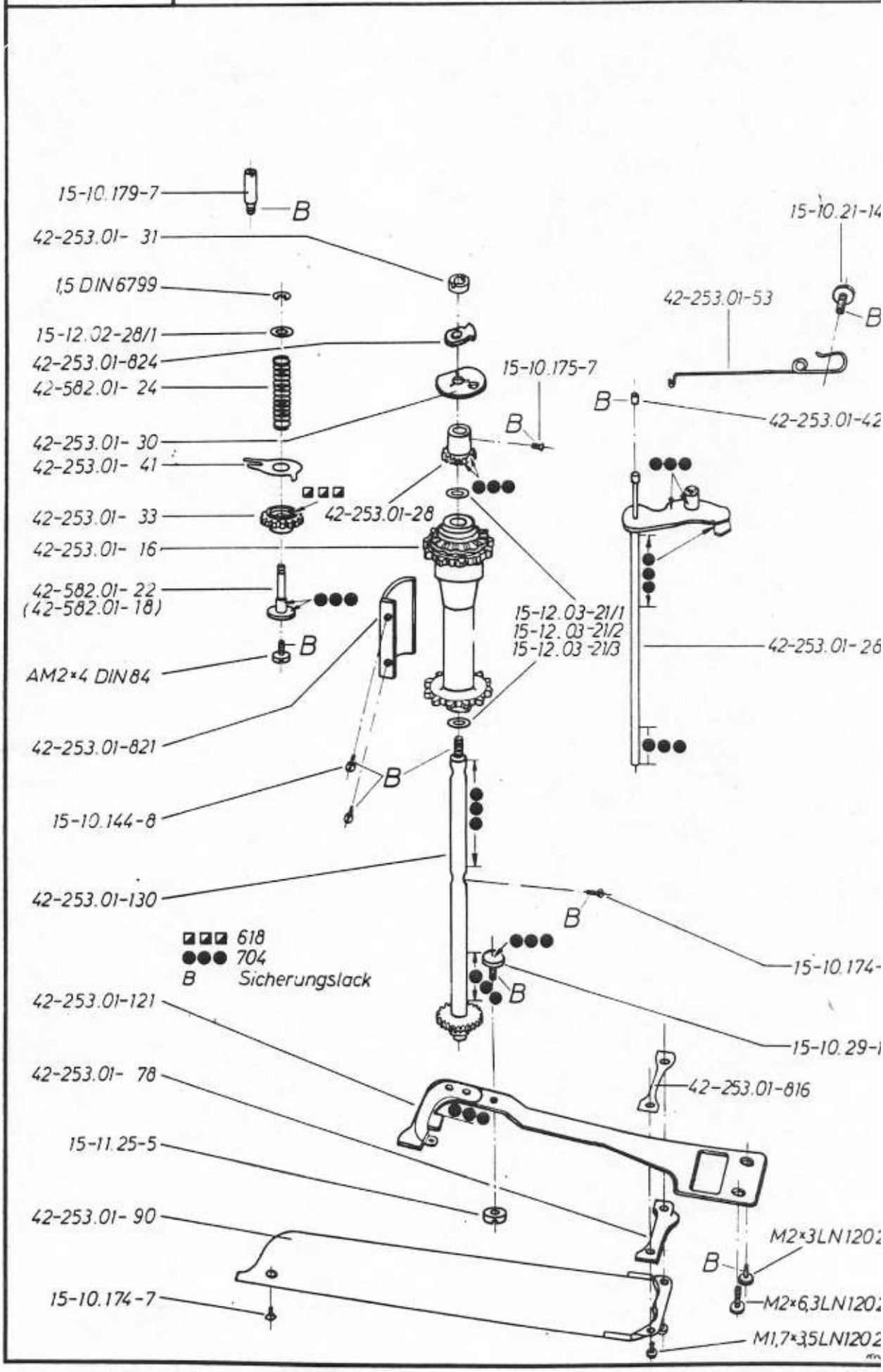

TECHNISCHER KUNDENDIENST

25.10.66

Ernst Leitz GmbH Wetzlar	Leica M3 - 746 501...926 700	42-253/14.

Bestell-Nr Part-No	Benennung Description	Leica - Modell M3	M2	M1
15-12.02 -28/1	Unterlegscheibe washer	1	1	1
15-12.03 -21/1	Unterlegscheibe 0,2 mm, bei Bedarf washer 0.2 mm thick, when needed	1	1	1
15-12.03-21/2	Unterlegscheibe 0,1 mm, bei Bedarf washer 0.1 mm thick, when needed	1	1	1
15-12.03-21/3	Unterlegscheibe 0,06 mm, bei Bedarf washer 0.06 mm thick, when needed	1	1	1
1,5 DIN 6799	Sicherungsscheibe C. clip	1	1	1

42-253/14.3 **Leica M3-746 501...926 700** Leitz WETZLAR

Bestell-Nr Part-No	Benennung Description	Leica - Modell M3	M2	M1
42-253.01- 16	Filmtransportwalze, kompl. sprocket wheel, compl.	1	1	1
42-253.01- 28	Ritzel intermediate gear	1	1	1
42-253.01- 30	Anschlagscheibe stop disc	1	1	1
42-253.01- 31	Mutter nut	1	1	1
42-253.01- 33	Zahnrad gear	1	1	1
42-253.01- 41	Sperrklinke lock lever	1	-	-
42-253.01- 78	Klemmleiste locking plate	1	1	1
42-253.01- 90	Deckplatte cover plate	1	1	1
42-253.01-121	Blattfeder, mont. flat spring, ass.	1	1	1
42-253.01-130	Aufzugachse, mont. winding shaft, ass.	1	1	1
42-253.01-281	Sperrhebel, mont. arresting lever, ass.	1	1	1
42-253.01-416	Spannplättchen tension washer	1	1	1
42-253.01-417	Feder / spring	1	1	1
42-253.01-429	Isolierhaube / insulation cap	1	1	1
42-253.01-816	Zwischenlage, bei Bedarf intermediate plate, when needed	1	1	1
42-253.01-821	Stützwinkel / angle bracket	1	1	1
42-253.01-824	Anschlagscheibe / stop disc	1	1	1
42-582.01- 18	Achse, mont. shaft, ass.	1	1	1
42-582.01- 22	Achse shaft	1	1	1
42-582.01- 24	Druckfeder pressure spring	1	1	1
AM 2x 4 DIN 84	Zylinderschraube, brüniert fillister head cap screw, burnished	2	2	2
M1,7x3,5 LN 120 25	Linsenschraube, schwarz halbmatt R. H. screw, black semi mat	1	1	1
M 2 x 3 LN 120 21	Zylinderschraube, brüniert fillister head cap screw, burnished	1	1	1
M2 x 6,3 LN 120 21	Zylinderschraube, Neusilber fillister head cap screw, german silver	1	1	1
M2 x 4 LN 120 21	Zylinderschraube, brüniert fillister head cap screw, burnished	2	2	2
15-10.144- 8	Senkschraube, brüniert C. S. screw, burnished	1	1	1
15-10.174- 5	Senkschraube, brüniert C. S. screw, burnished	1	1	1
15-10.174- 7	Schraube, schwarz halbmatt screw, black semi mat	1	1	1
15-10.175- 7	Schraube, brüniert screw, burnished	1	-	-
15-10.179- 7	Schraube, brüniert screw, burnished	1	1	1
15-10.29 -14	Justierschraube, brüniert adjusting screw, burnished	1	1	1
15-11.25 - 5	Mutter, brüniert nut, burnished			

TECHNISCHER KUNDENDIENST

25.10.66

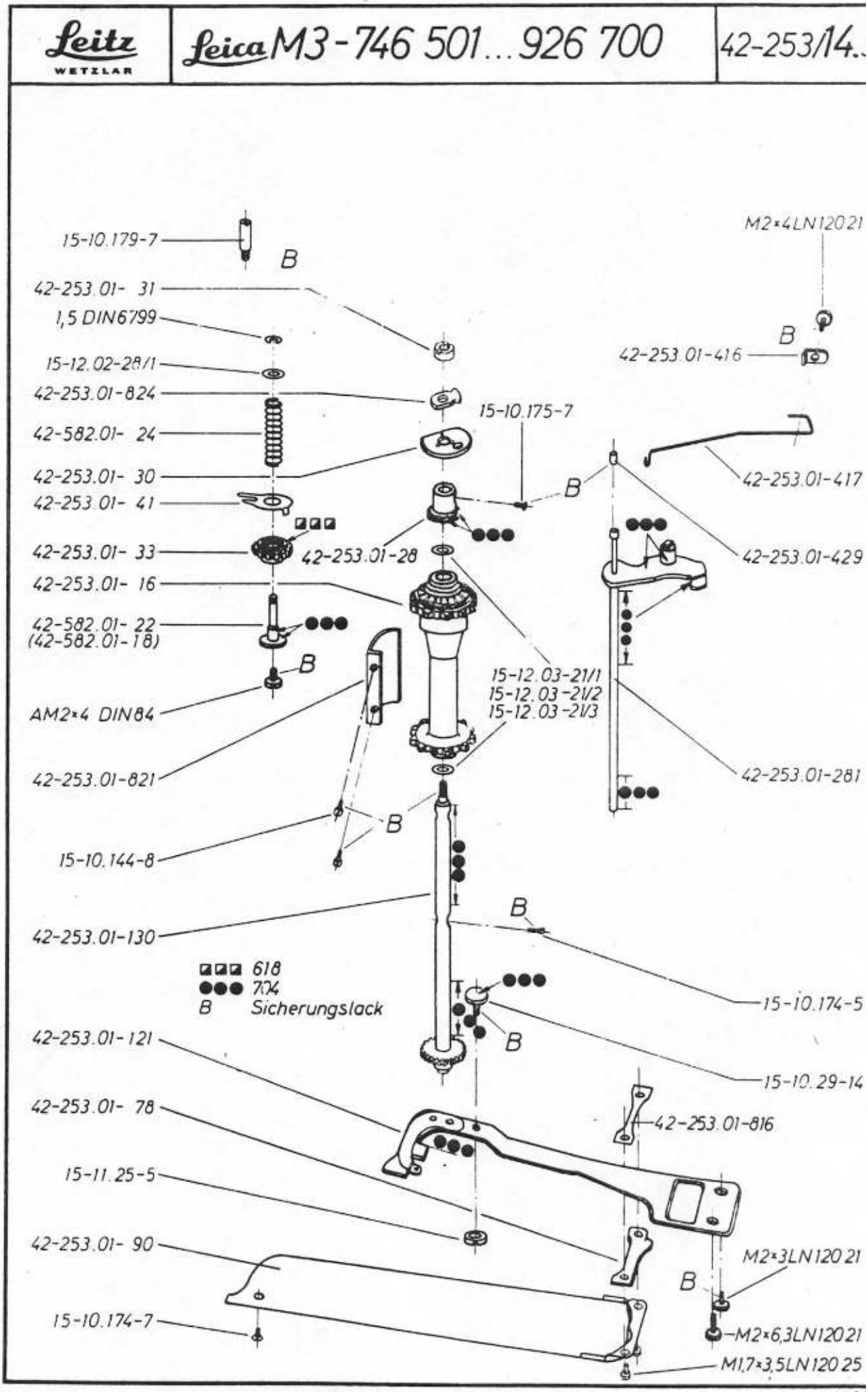

TECHNISCHER KUNDENDIENST

25.10.66

Ernst Leitz GmbH Wetzlar	Leica M3-926 701...	42-253/14.

Bestell-Nr Part-No	Benennung Description	Leica - Modell M3	M2	M1							
15-11.25- 5	Mutter, brüniert nut, burnished	1	1	1							
15-12.02-28/1	Unterlegscheibe washer	1	1	-							
15-12.03-21/1	Unterlegscheibe 0,2 mm, bei Bedarf washer 0.2 mm thick, when needed	2	2	2							
15-12.03-21/2	Unterlegscheibe 0,1 mm, bei Bedarf washer 0.1 mm thick, when needed	2	2	2							
15-12.03-21/3	Unterlegscheibe 0,06 mm, bei Bedarf washer 0.06 mm thick, when needed	2	2	2							
1,5 DIN 6799	Sicherungsscheibe C. clip	1	1	1							

42-253/14.4	Leica M3-926 701...	Leitz WETZLAR

Bestell-Nr Part-No	Benennung Description	Leica-Modell M3	M2	M1
42-253.01- 16	Filmtransportwalze, kompl. sprocket wheel, compl.	1	-	-
42-253.01- 28	Ritzel intermediate gear	1	1	1
42-253.01- 30	Anschlagscheibe stop disc	1	1	1
42-253.01- 31	Mutter nut	1	1	1
42-253.01- 33	Zahnrad gear	1	1	1
42-253.01- 78	Klemmleiste locking plate	1	1	1
42-253.01- 90	Deckplatte cover plate	1	1	1
42-253.01-121	Blattfeder, mont. flat spring, ass.	1	1	1
42-253.01-130	Aufzugachse, mont. winding shaft, ass.	1	1	1
42-253.01-281	Sperrhebel, mont. arresting lever, ass.	1	1	1
42-253.01-416	Spannplättchen tension washer	1	1	1
42-253.01-417	Feder spring	1	1	1
42-253.01-429	Isolierhaube insulation cap	1	1	1
42-253.01-684	Sperrklinke lock lever	1	1	1
42-253.01-816	Zwischenlage, bei Bedarf intermediate plate, when needed	1	1	1
42-253.01-821	Stützwinkel angle bracket	1	1	1
42-253.01-824	Anschlagscheibe stop disc	1	1	1
42-582.01- 18	Achse, mont. / shaft, ass.	1	1	1
42-582.01- 22	Achse / shaft	1	1	1
42-582.01- 24	Druckfeder pressure spring	1	1	-
AM 2 x 4 DIN 84	Zylinderschraube fillister head cap screw	1	1	1
M1,7x2,5 DIN 84	Zylinderschraube, bei Bedarf fillister head cap screw, when need.	1	1	1
M1,7x3,5 LN 12025	Linsenschraube R. H. screw	2	2	2
M 2 x 3 LN 120 21	Zylinderschraube fillister head cap screw	1	1	1
M2 x 6,3 LN 12021	Zylinderschraube, Neusilber fillister head cap screw, german silver	1	1	1
M 2 x 4 LN 12021	Zylinderschraube, brüniert fillister head cap screw, burnished	1	1	1
15-10.144- 8	Senkschraube, brüniert countersunk screw, burnished	2	2	2
15-10.174- 5	Senkschraube, brüniert countersunk screw, burnished	1	1	1
15-10.174- 7	Schraube, schwarz halbmatt screw, black semi mat	1	1	1
15-10.175- 7	Schraube, brüniert screw, burnished	1	1	1
15-10.29 -14	Justierschraube, brüniert adjusting screw, burnished	1	1	1

TECHNISCHER KUNDENDIENST

25.10.6

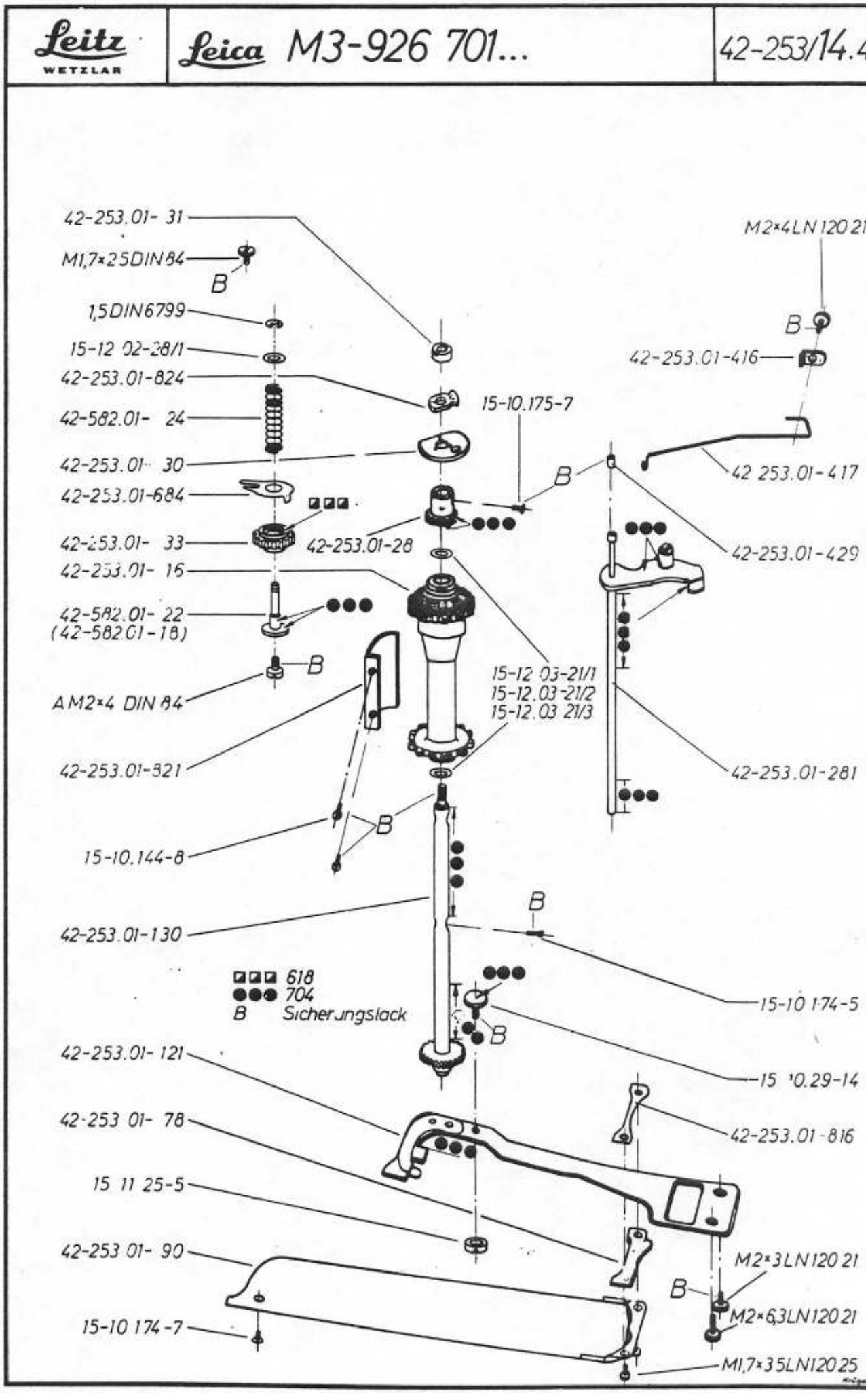

TECHNISCH II KUNDENDIENST

25.10.66

Ernst Leitz GmbH Wetzlar	Leica M3-700 001...926 700	42-253/15

Bestell-Nr Part-No	Benennung Description	Leica - Modell M3								
15-12.02-14/1	Scheibe, brüniert washer, burnished	1								
15-12.03-16/1	Unterlegscheibe, nach Bedarf, brün. washer, when needed, burnished									
15-12.03-17/1	Sattelfeder, brüniert saddle spring, burnished	1								
15-12.03-22/1	Federscheibe spring disc	1								
15-12.03-23/1	Unterlegscheibe, nach Bedarf washer, when needed									
1,5 DIN 6799	Idealscheibe C. clip	1								

42-253/15.1	Leica M3-700 001...926 700	Ernst Leitz GmbH Wetzlar

Bestell-Nr Part-No	Benennung Description	Leica - Modell M3									
42-253.01- 61	Achslager bearing bushing	1									
42-253.01- 62	Abstimmplättchen, nach Bedarf adjusting plate, when needed										
42-253.01- 65	Idealscheibe C. clip	1									
42-253.01- 67	Bremsring brake ring	1									
42-253.01- 71	Exzenter eccenter	1									
42-253.01- 73	Feder spring	1									
42-253.01- 74	Exzenter eccenter	1									
42-253.01- 93	Lager bushing	1									
42-253.01-303	Bremsscheibe brake disc	1									
42-253.01-339	Lagerblech bearing plate	1									
42-253.01-342	Hülse sleeve	1									
42-253.01-344	Bremsscheibe, mont. brake disc, ass.	1									
42-253.01-349	Bremshebel, mont. brake lever, ass.	1									
42-253.01-355	Zwischenrad, mont. intermediate gear, ass.	1									
42-253.01-361	Sperrklinke, mont. arresting lever, ass.	1									
42-253.01-364	Feder spring	1									
42-253.01-368	Zwischenradachse intermediate gear shaft	1									
42-253.01-429	Isolierhaube insulation cap	2									
M1,4x2,2 DIN 63	Senkschraube, brüniert C. S. screw, burnished	2									
M 2 x 3 LN 120 21	Zylinderschraube, brüniert filister screw, burnished	2									
15-10.174- 6	Senkschraube, brüniert C. S. screw, burnished	2									
15-10.21 - 6	Achsschraube, shoulder screw	1									
15-10.21 - 7	Schraube screw	1									
15-10.29 -15	Schraube, brüniert screw, burnished	1									
15-10.230- 5	Schraube screw	1									
15-11.175- 5	Mutter, gebeizt nut, corroded	1									
15-11.22 - 6	Exzentermutter eccentric nut	1									
15-12.01- 7/1	Unterlegscheibe, nach Bedarf, brün. washer, when needed, burnished										
15-12.02-10/1	Sattelfeder, brüniert saddle spring, burnished	1									
15-12.02-13/2	Unterlegscheibe, nach Bedarf										

12. 7.62

Ernst Leitz GmbH Wetzlar	Leica M3-700001...926 700	42-253/15

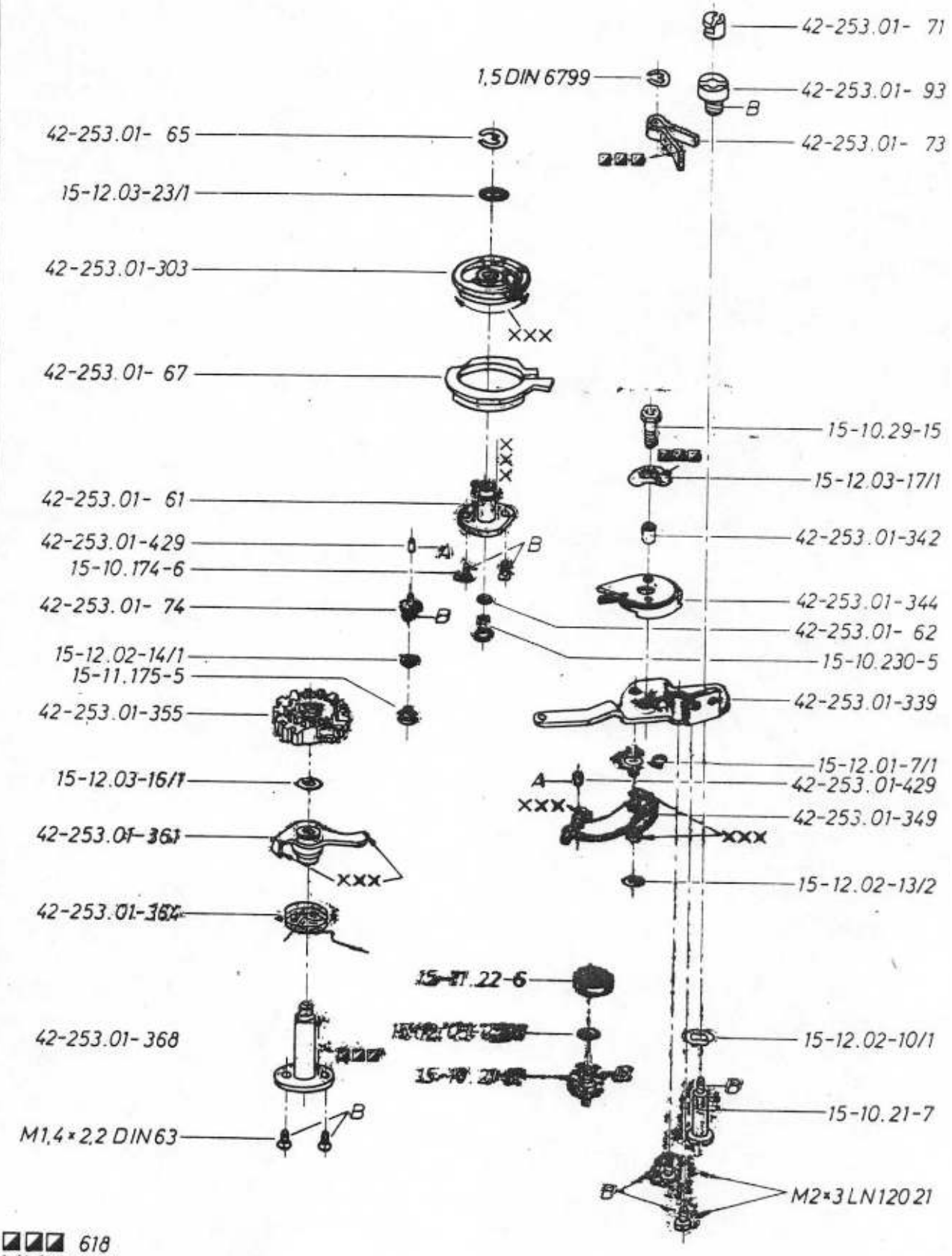

12. 7.62

◪◪◪ 618
XXX 830
A Araldit 103
B Sicherungslack

Daniel D. Teoli Jr.
Archival Collection

Ernst Leitz GmbH Wetzlar	Leica M3-926 701...	42-253/15

Bestell-Nr Part-No	Benennung Description	Leica - Modell M3	M2	M1						
15-12.02 -14/1	Unterlegscheibe, nach Bedarf, brün. washer, when needed, burnished									
15-12.03 -16/1	Unterlegscheibe, nach Bedarf, brün. washer, when needed, burnished									
15-12.03 -17/1	Sattelfeder, brüniert saddle spring, burnished	1	-	-						
15-12.03 -22/1	Federscheibe spring disc	1	-	-						
15-12.03 -23/1	Unterlegscheibe, nach Bedarf washer, when needed		-	-						
1,5 DIN 6799	Idealscheibe C. clip	1	1	1						

42-253/15.2	Leica M3-926 701...	Ernst Leitz GmbH Wetzlar

Bestell-Nr Part-No	Benennung Description	Leica - Modell M3	M2	M1							
42-253.01- 65	Idealscheibe C. clip	1	-	-							
42-253.01- 67	Bremsring brake ring	1	-	-							
42-253.01- 71	Exzenter eccenter	1	-	-							
42-253.01- 73	Feder spring	1	-	-							
42-253.01- 74	Exzenter eccenter	1	1	1							
42-253.01- 93	Lager bushing	1	-	-							
42-253.01-303	Bremsscheibe brake disc	1	-	-							
42-253.01-339	Lagerblech bearing plate	1	-	-							
42-253.01-342	Hülse sleeve	1	-	-							
42-253.01-344	Bremsscheibe, mont. brake disc, ass.	1	-	-							
42-253.01-349	Bremshebel mont. brake lever, ass.	1	-	-							
42-253.01-355	Zwischenrad, mont. intermediate gear, ass.	1	1	1							
42-253.01-361	Sperrklinke, mont. arresting, ass.	1	1	1							
42-253.01-364	Feder spring	1	1	1							
42-253.01-368	Zwischenradachse intermediate gear shaft	1	1	1							
42-253.01-429	Isolierhaube insulation cap	2	2	2							
42-253.01-685	Achslager bearing bushing	1	-	-							
M1,4 x 2,2 DIN 63	Senkschraube, brüniert C. S. screw, burnished	2	2	2							
M2,3 x 2,5 DIN 551	Gewindestift, brüniert threaded pin, burnished	1	1	1							
M 2 x 3 LN 120 21	Zylinderschraube, brüniert filister screw, burnished	2	-	-							
15-10.174- 6	Senkschraube, brüniert C. S. screw, burnished	2	2	2							
15-10.21 - 6	Achsschraube, brüniert shoulder screw, burnished	1	-	-							
15-10.21 - 7	Schraube, brüniert screw, burnished	1	-	-							
15-10.29 -15	Schraube, brüniert screw, burnished	1	-	-							
15-11.175- 5	Mutter, gebeizt nut, corroded	1	1	1							
15-11.22 - 6	Exzentermutter eccentric nut	1	-	-							
15-11.232- 5	Mutter, gebeizt nut, corroded	1	1	1							
15-12.01 - 7/1	Unterlegscheibe, nach Bedarf, brün. washer, when needed, burnished		-	-							
15-12.02 -10/1	Sattelfeder, brüniert saddle spring, burnished	1	1	1							
15-12.02 -1½/2	Unterlegscheibe, nach Bedarf washer, when needed		-	-							

12. 7.62

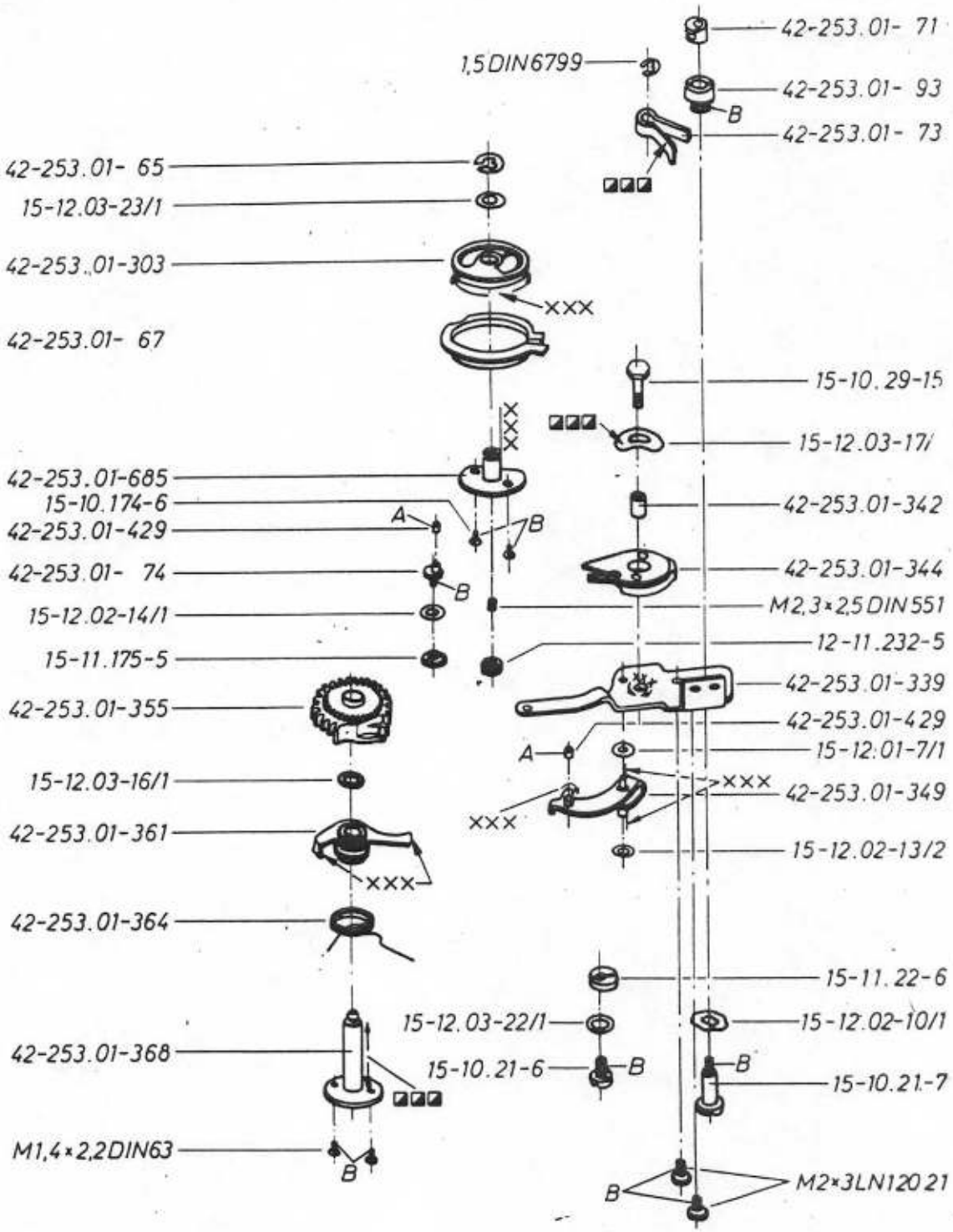

12. 7.62

◪◪◪ 618
XXX 830
B Sicherungslack
A Araldit 103

Daniel D. Teoli Jr. Archival Collection

Ernst Leitz GmbH Wetzlar	Leica M3-963 001...	42-253/15.

Bestell-Nr Part-No	Benennung Description	Leica - Modell M3	M2	M1							
15-12.03 -25/1	Federscheibe spring disc	1	1	1							
1,5 DIN 6799	Sicherungsscheibe C. clip	1	1	1							

42-253/15.3	Leica M3-963 001...	Ernst Leitz GmbH Wetzlar

Bestell-Nr Part-No	Benennung Description	Leica - Modell M3	M2	M1
42-253.01- 74	Exzenter eccenter	1	1	1
42-253.01-355	Zwischenrad, mont. intermediate gear, ass.	1	1	1
42-253.01-361	Sperrklinke, mont. arresting lever, ass.	1	1	1
42-253.01-364	Feder spring	1	1	1
42-253.01-368	Zwischenradachse intermediate gear shaft	1	1	1
42-253.01-429	Isolierhaube insulation cap	2	2	2
42-582.01- 33	Achslager bearing bushing	1	1	1
42-582.01-256	Friktionsscheibe friction washer	1	1	1
42-582.01-258	Bremsklotz brake disc	1	1	1
42-582.01-259	Zwischenscheibe intermediate plate	1	1	1
42-582.01-260	Friktionsscheibe friction plate	1	1	1
42-582.01-261	Bremsscheibe brake	1	1	1
42-582.01-271	Lager bearing	1	1	1
42-582.01-273	Exzenter eccenter	1	1	1
42-582.01-274	Bremsfeder brake spring	1	1	1
42-582.01-275	Bremskufe brake runner	1	1	1
42-582.01-277	Bremsscheibe, genietet brake plate, riveted	1	1	1
42-582.01-449	Bremse, kompl. / brake, compl.	1	1	1
42-582.01-470	Lagerblech, genietet bearing plate, riveted	1	1	1
M1,4x2,2 DIN 63	Schraube, brüniert/ screw, burnished	2	2	2
M1,7 x 3 DIN 84	Zylinderschraube, brüniert cylindrical head screw, burnished	1	1	1
M 2 x 5 DIN 84	Schraube, brüniert screw, burnished	1	1	1
M2,3x2,5 DIN 551	Gewindestift, brüniert thread pin, burnished	1	1	1
15-10.174- 6	Schraube, brüniert screw, burnished	2	2	2
15-10.21 -12	Schraube, brüniert screw, burnished	1	1	1
15-10.21 -13	Schraube, brüniert screw, burnished	1	1	1
15-11.175- 5	Mutter, gebeizt nut, corroded	1	1	1
15-11.232- 5	Mutter, gebeizt nut, corroded	1	1	1
15-12.02 -10/1	Sattelfeder, brüniert saddle spring, burnished	1	1	1
15-12.02 -14/1	Scheibe, brüniert washer, burnished	1	1	1
15-12.03 -16/1	Unterlegscheibe, nach Bedarf, brün. washer, when needed, burnished			

TECHNISCHER KUNDENDIENST

25.10.66

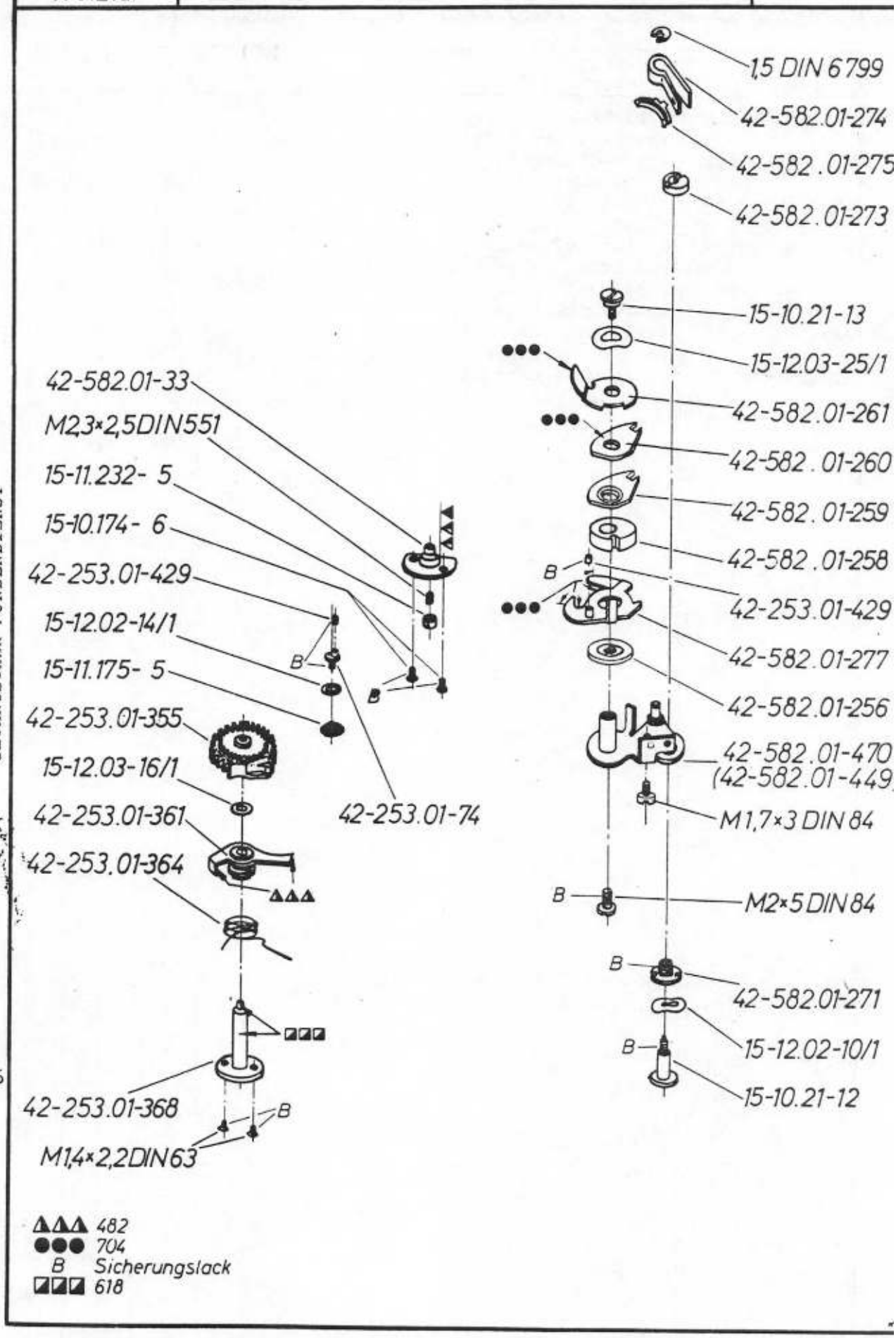

TECHNISCHER KUNDENDIENST

5.10.66

42-253/16.1	Leica M3 700 001... 963 000	Leitz WETZLAR

Bestell-Nr Part-No	Benennung Description	Leica-Modell M3							
42-253.01-191	Verschluß, komplett shutter, complete	1							
42-253.01-192	Große Rollowalze, montiert large shutter roller, ass.	1							
42-253.01-232	Rollowalze, komplett shutter roller, complete	1							
42-253.01-246	Kleine Rollowalze, komplett smaller shutter roller, complete	1							
42-253.01-257	Achslager, montiert bearing bushing, ass.	2							
42-253.01-265	Rollotuch, lang, geklebt shutter curtain - long, (glued)	1							
42-253.01-273	Rollotuch, kurz, geklebt shutter curtain - short (glued)	1							

TECHNISCHER KUNDENDIENST

25.10.66

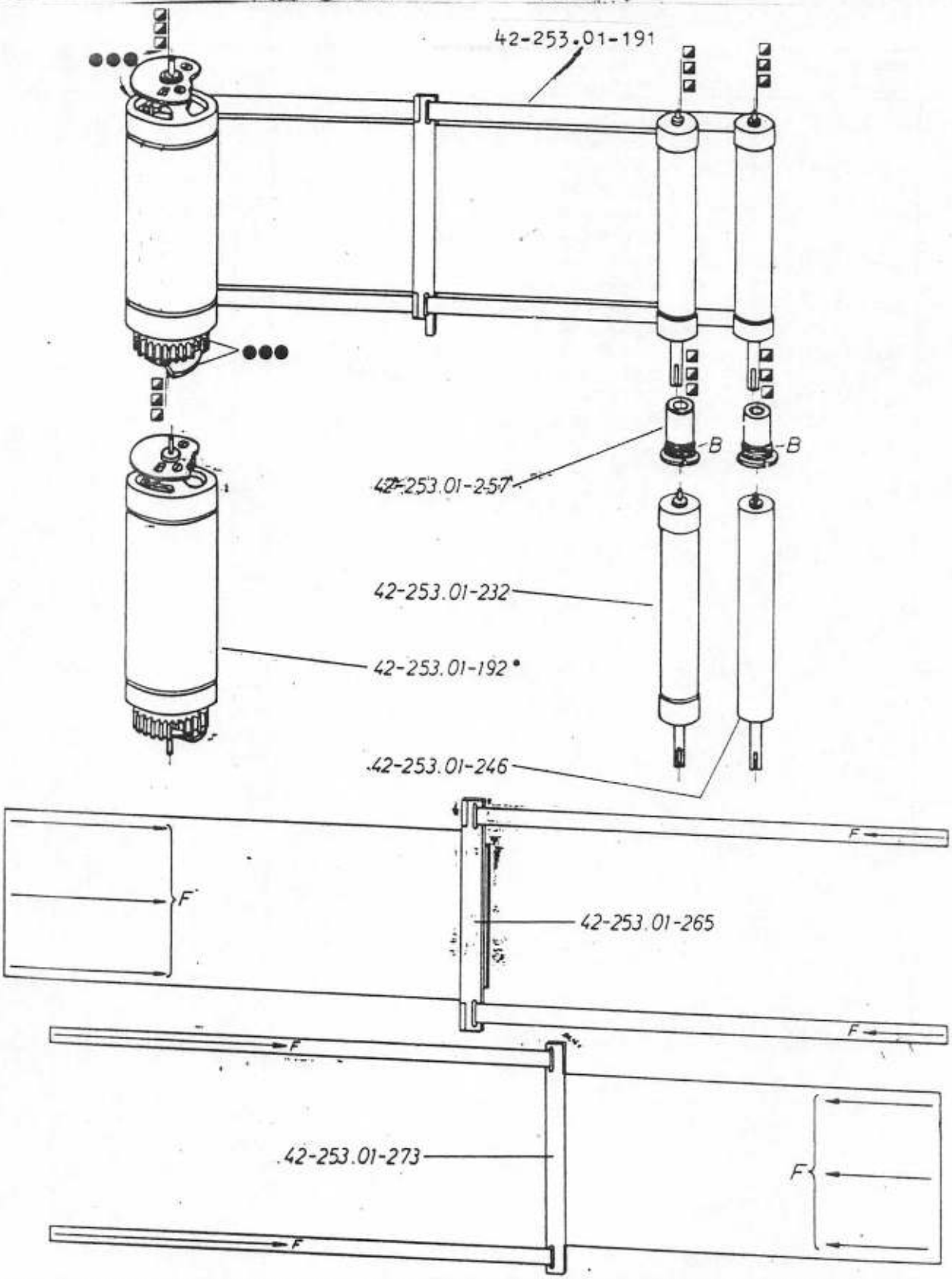

•Bei Verwendung für Reparaturen von 700 001 bis 782 000 müssen der Anschlaghebel 42-253.01-129 (siehe Blatt 13.2) sowie die Lichtleisten 42-253.01-10 und 42-253.01-988 (siehe Blatt 17.1) eingebaut werden (siehe Rep.Anltg, Bl. 59 u. 60).
When using for repairs from 700 001 to 782 000 the stop lever 42-253.01-129 (see sheet 13.2) as well as the light shields 42-253.01-10 and 42-253.01-988 (se sheet 17.1) are to be fixed (see repair instructions, sheet 59 and 60).

□□□ 618 ●●● 704 B Sicherungslack F Teroson-Fluid spezial

42-253/16.2 Leica M3 - 963 001...

Leitz WETZLAR

Bestell-Nr Part-No	Benennung Description	Leica - Modell M3	M2	M1
42-253.01-232	Rollowalze, komplett shutter roller, complete	1	1	1
42-253.01-246	kleine Rollowalze, komplett smaller shutter roller, complete	1	1	1
42-253.01-257	Achslager, montiert bearing bushing, ass.	2	2	2
42-253.01-273	Rollotuch, kurz, geklebt shutter, curtain - short (glued)	1	1	1
42-253.01-918	Klemmleiste clamping ledge	1	1	-
42-253.01-923	Rollotuch, lang, geklebt shutter, curtain - long (glued)	1	1	1
42-582.01-188	Verschluß, komplett shutter, complete	1	1	1
42-582.01-199	große Rollowalze, montiert main roller, ass.	1	1	1
M 1,4 x 3 DIN63	Senkschraube countersunk screw	2	2	-

TECHNISCHER KUNDENDIENST

25.10.

Ernst Leitz GmbH Wetzlar	Leica M3-963 001...	42-253/16.2

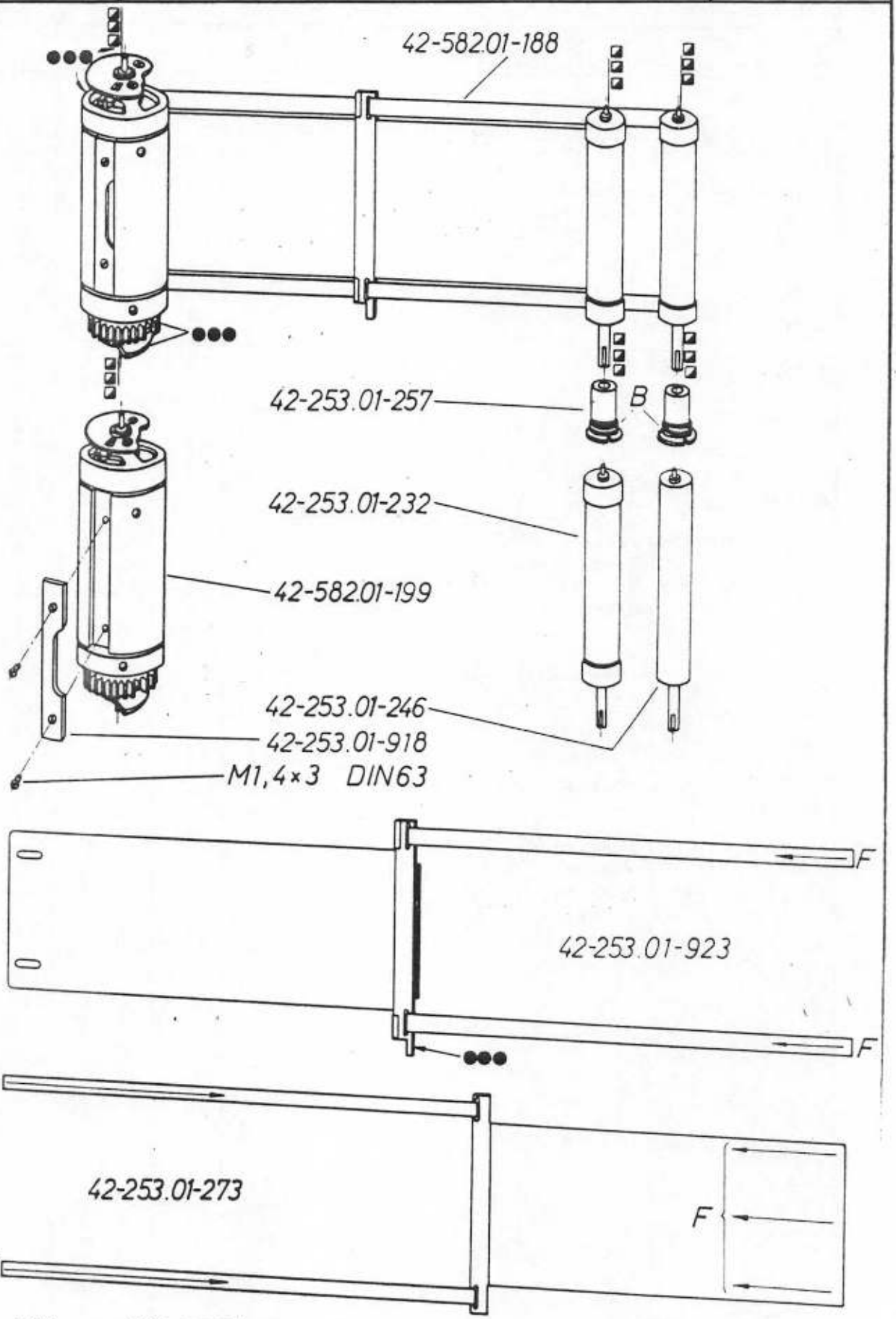

▪▪▪ 618 ●●● 704 B Sicherungs-Lack F Teroson-Fluid spezial

TECHNISCHER KUNDENDIENST

25.10.66

42-253/17.1	Leica M3-700 001...782 000	Leitz WETZLAR

Bestell-Nr. Part-No.	Benennung Description	Leica-Modell M3								
42-253.01- 7	Hauptkörper main body	1								
42-253.01- 10	Lichtleiste light shield	2								
42-253.01- 11	Exzenter eccenter	2								
42-253.01- 23	Anlagewinkel angle bracket	1								
42-253.01- 25	Achse shaft	1								
42-253.01- 27	Lager bearing	1								
42-253.01- 43	Anschlag stop	1								
42-253.01- 87	Drehfedersicherung special spring	1								
42-253.01- 106	Abdichtung sealing	1								
42-253.01- 507	Lichtblende light shield	1								
M1,4x3 DIN-53	Senkschraube C. S. screw	2								
15-10. 143- 5	Schraube screw	1								
15-10. 170- 7	Schraube screw	1								
15-10. 170- 14	Anschlagschraube stop screw	2								
15-10. 170- 25	Schraube screw	2								
15-10. 176- 5	Gewindestift threaded pin	1								
15-11.172- 5	Mutter nut	1								
15-12.02 -15/1	Scheibe washer	1								
15-12.03 -24/1	Scheibe washer	2								

1.8.

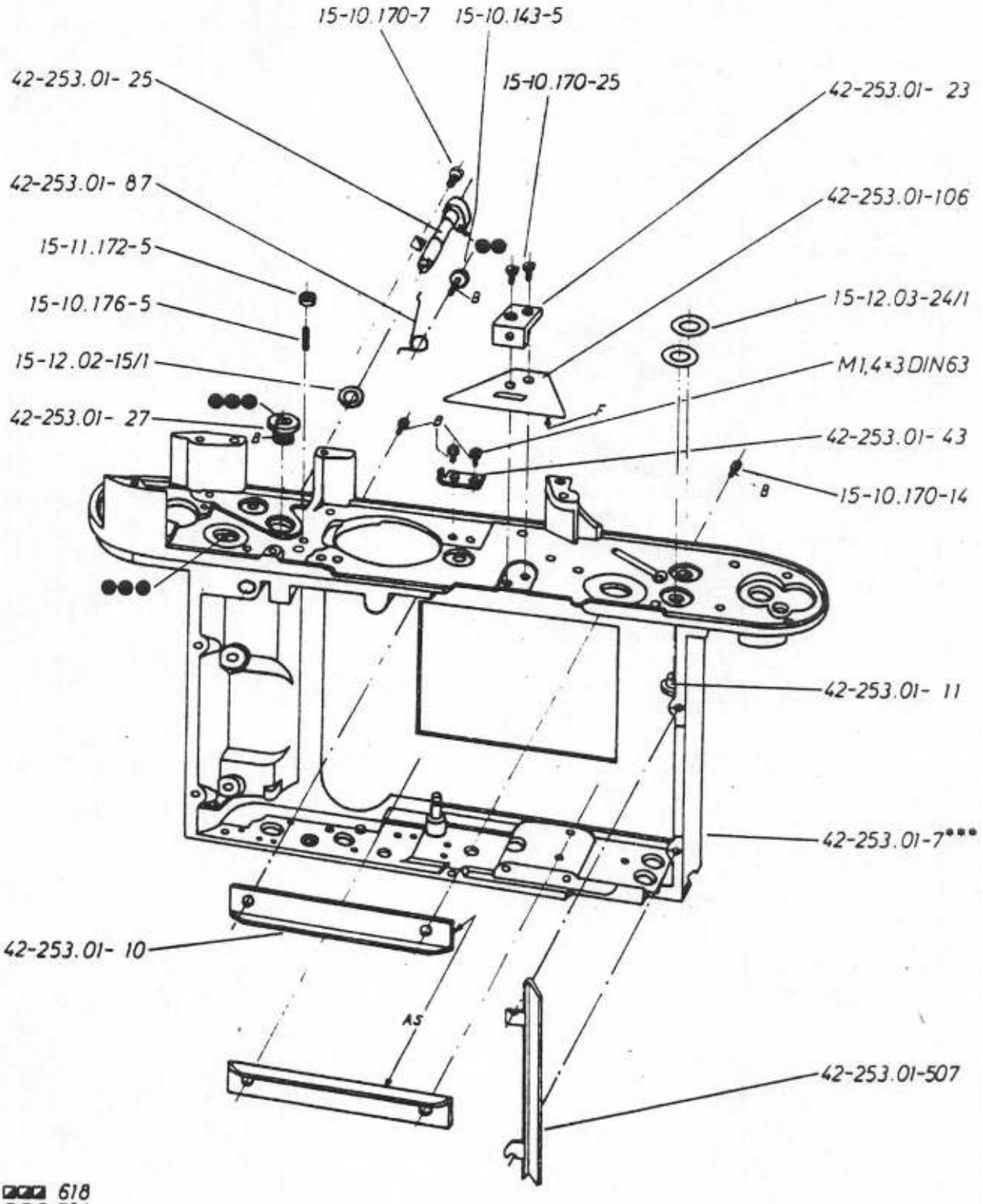

.12.61

618
704
AS Araldit 121S
B Sicherungslack
F Teroson-Fluid spezial

***siehe Reparaturanleitung, Blatt 73.1
see servicing instruction, sheet 73.1

42-253/17.2	Leica M3-782 001...953 900	Ernst Leitz GmbH Wetzlar

Teilteil-Nr Part-No	Benennung Description	Leica-Modell M3
42-253.01- 7	Hauptkörper main body	1
42-253.01- 10	Lichtleiste light shield	2
42-253.01- 11	Exzenter eccenter	2
42-253.01- 25	Achse shaft	1
42-253.01- 27	Lager bearing	1
42-253.01- 43	Anschlag stop	1
42-253.01- 87	Drehungsfeder special spring	1
42-253.01- 411	Anlagewinkel angle bracket	1
42-253.01- 413	Abdichtung sealing	1
42-253.01- 507	Lichtleiste light shield	1
M1,4x3 DIN 63	Senkschraube C. S. screw	5
15-10. 143- 5	Schraube screw	1
15-10. 170- 7	Schraube screw	1
15-10. 176- 5	Gewindestift threaded pin	1
15-10. 20 - 11	Zylinderschraube filister screw	1
15-11. 172- 5	Mutter nut	1
15-12. 02 -15/1	Scheibe washer	1
15-12. 03 -24/1	Scheibe washer	2
15-10. 170- 14	Anschlagschraube stop screw	2

1.8.57

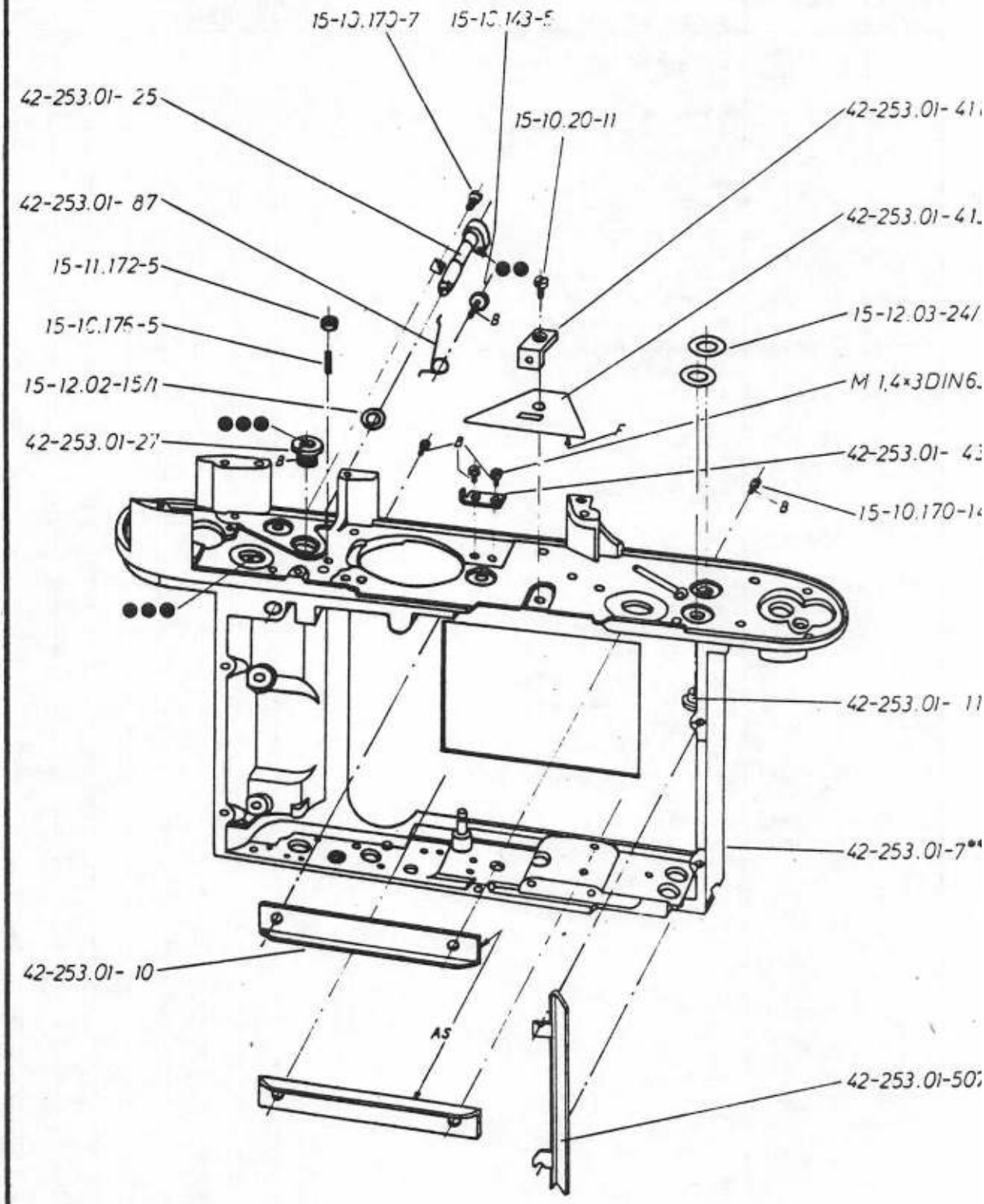

1.12.61

■■■ 618
●●● 704
AS Araldit 121S
B Sicherungslack
F Teroson-Fluid spezial

***siehe Reparaturanleitung, Blatt 73.1
see servicing instruction, sheet 73.1

42-253/17.3	Leica M3-953 901...	Ernst Leitz GmbH Wetzlar

Bestell-Nr Part-No	Benennung Description	Leica - Modell M3	M2	M1							
42-253.01- 7	Hauptkörper main body	1	-	-							
42-253.01- 11	Exzenter eccenter	2	2	2							
42-253.01- 25	Achse shaft	1	-	-							
42-253.01- 27	Lager bearing	1	1	1							
42-253 01- 43	Anschlag stop	1	1	1							
42-253.01- 87	D hungsfeler s ecial spring	1	-	-							
42-253.01-411	Anlagewinkel angl br cket	1	1	1							
42-253.01-413	Abdicht sealing	1	1	1							
42-253 01-507	ichtleiste li ht shield	1	1	1							
1 4 3 DIN 6	Senkschraube S r w	2	2	2							
15 1 143- 5	Schrau w	1	-	-							
5-10 1 0- 7	Schraube scr w	1		-							
15 10. 7 - 5	Gewindestift h ad d in										
5 2	y inderschraube l r sc ew	1		1							
15-11.172- 5	Mutter nit	1	-	-							
15-12.02 -15/1	Scheibe washer	1	1	1							
15 12 03 -24/1	Scheibe washer	2	2	2							

15.6.59

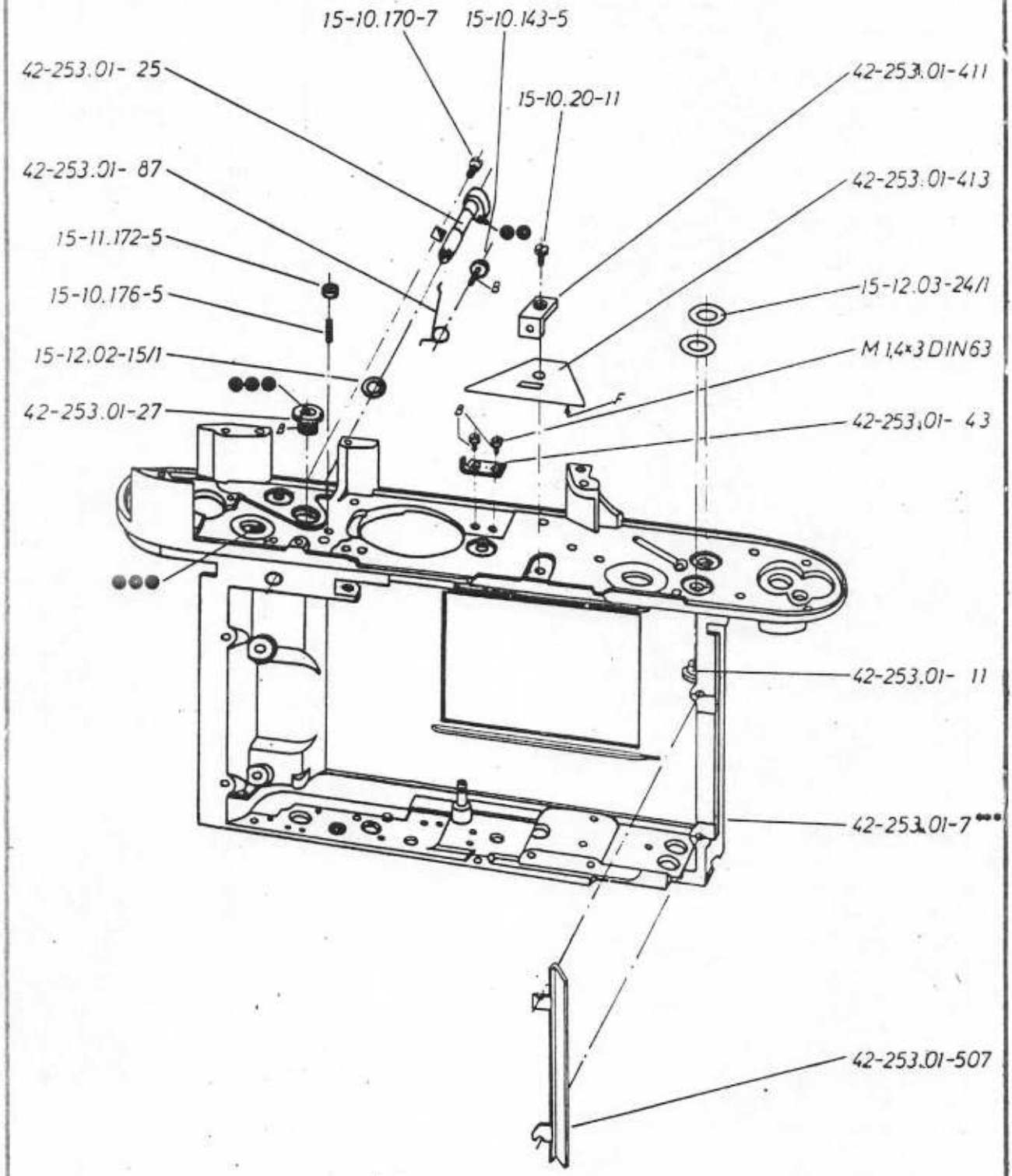

1.12.61

618
704
B Sicherungslack
F Teroson-Fluid spezial

***siehe Reparaturanleitung, Blatt 73.1
see servicing instruction, sheet 73.1

42-253/17.4	Leica M3-963 001...	Ernst Leitz GmbH Wetzlar

Bestell-Nr Part-No	Bezeichnung Description	Leica - Modell M3	M2	M1							
42-253.01- 11	Exzenter eccenter	2	2	2							
42-253.01- 25	Achse shaft	1	-	-							
42-253.01- 27	Lager bearing	1	1	1							
42-253.01- 43	Anschlag stop	1	1	1							
42-253.01- 87	Drehungsfeder special spring	1	-	-							
42-253.01-411	Anlagewinkel angle bracket	1	1	1							
42-253.01-413	Abdichtung sealing	1	1	1							
42-253.01-507	Lichtleiste light shield	1	1	1							
42-253.01-911	Lichtleiste light shield	1	1	1							
42-582.01- 9	Hauptkörper main body	1	1	1							
M 1,4 x 3 DIN 63	Senkschraube C. S. screw	2	-								
15-10.143- 5	Schraube screw	1	-	-							
15-10.170- 7	Schraube screw	1	-	-							
15-10.176- 5	Gewindestift threaded pin	1	1	1							
15-10.20 -11	Schraube screw	1	1	1							
15-11.172- 5	Mutter nut	1	1	1							
15-12.02 -15/1	Scheibe washer	1	1	1							
15-12.03 -24/1	Scheibe washer	2	2	2							

15. 5.

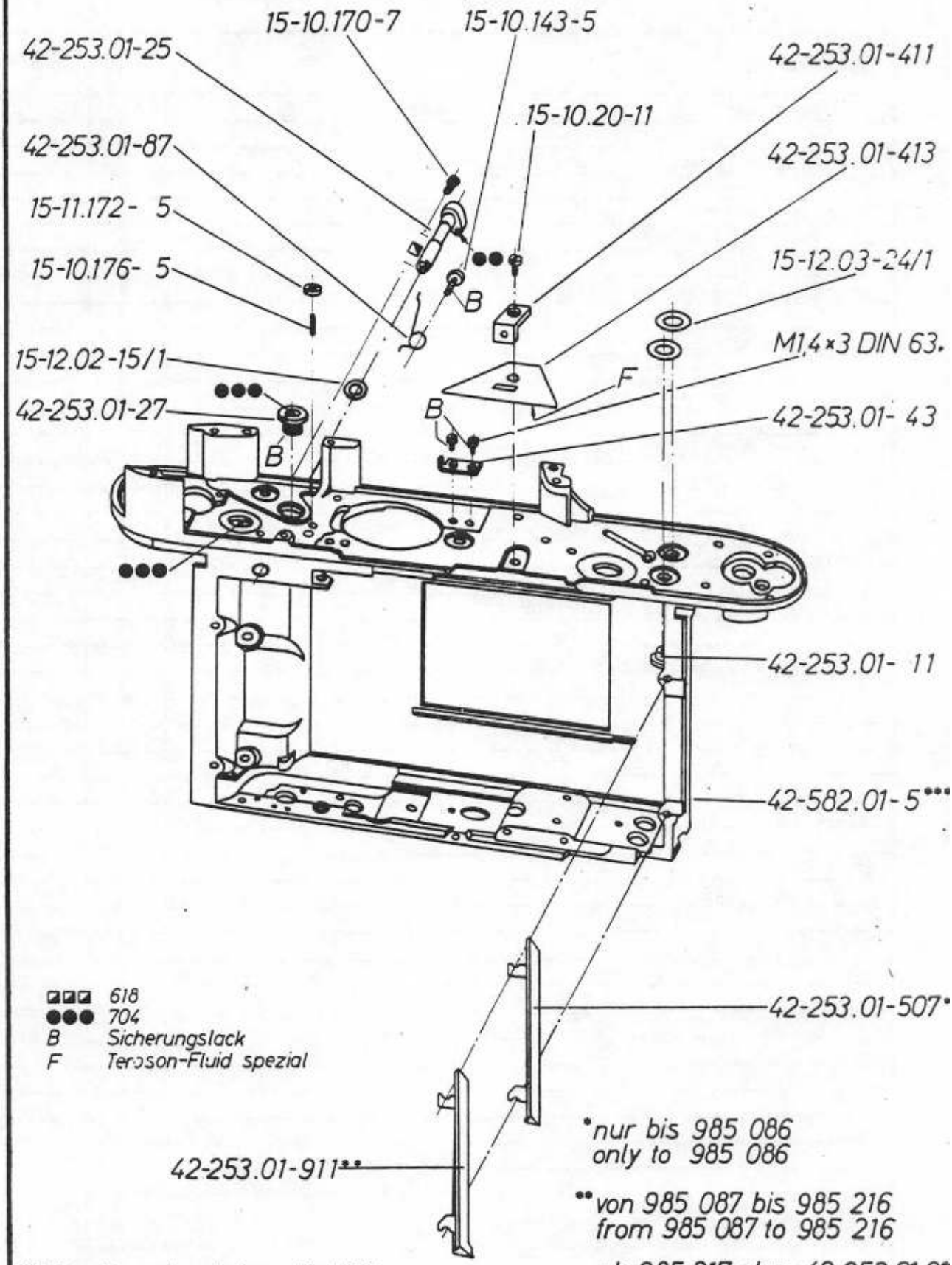

618
704
B Sicherungslack
F Teroson-Fluid spezial

1.12.61

*nur bis 985 086
only to 985 086

**von 985 087 bis 985 216
from 985 087 to 985 216

ab 985 217 ohne 42-253.01-911
from 985 217 without
42-253.01-911

***siehe Reparaturanleitung, Blatt 73.1
see servicing instruction, sheet 73.1

Ernst Leitz G m b H Wetzlar	Servicing Instructions for the Leica M 3	42-253

Index of Servicing Instruction Sheets

Description	Sheet	Remarks
Removing and refitting the cover plate	1	
	2	
Removing and refitting the housing	3	
	4	
Removing and refitting the rangefinder	5	
Adjusting the brakes	6	
	7	
Fitting and setting the self-timer mechanism	8	
	9	
Adjusting the rangefinder	10	
	11	
	12	
	13	
Setting and testing the shutter speeds	14	
	15	
	16	
Removing and refitting the escapement mechanism	17	
Fitting the bayonet ring	18	
Removing and refitting the pressure plate	19	
Setting the film transport shaft	20	
	21	
Checking the synchronization	22	
	23	
	24	
	25	

Ernst Leitz G m b H Wetzlar	Servicing Instructions for the Leica M 3	Sheet 50 to 99

Index of Servicing Instruction Sheets

Description	Sheet	Remarks
Repairs to the winding and release mechanism	50	
Repairs to the winding and release mechanism	51	
Repairs to the winding and release mechanism	52	
	53	
Eliminating light leakage caused by the chico flash gun	54	
Curing scratches on the back of the film	55	
Replacing the shutter blinds	56	
	57	
	58	
Eliminating light leakage on the Leica shutter	59	
	60	
Repairs to the winding and release mechanism	61	
Fitting the finder frame selector	62	
	63	
	64	
	65	
Repairs to the rewind mechanism	66	
	67	
Additional work when fitting a new blind roller	68	
Fitting a drive shaft for single-stroke film winding	69	
	70	
Cleaning and lubricating the escapement	71	
Eliminating the entrance of stray light into the housing	72	
Possibilities for the use of main body, housing and light-rim	73	
Modification of the housings 42-582.01-440 and 42-582.01-328	74	

TECHNISCHER KUNDENDIENST

25.10.66

Removing and Refitting the Cover Plate

Sheets 1 and 2

Spanners and Tools

1. Spanner	42-253.01- 36 W4
2. Pliers	42-253.01-U374 W1
3. Spanner	42-253.01- 483 W8
4. Spanner	42-253.01- 486 W1
5. Spanner	42-253.01- 722 W2
6. Servicing stamp	42-253.01-Z1 W60
7. Screw driver, 2.5 mm dia.	
8. Tweezers	
9. Lead pliers	
10. Wax 637	

Sequence of Operations

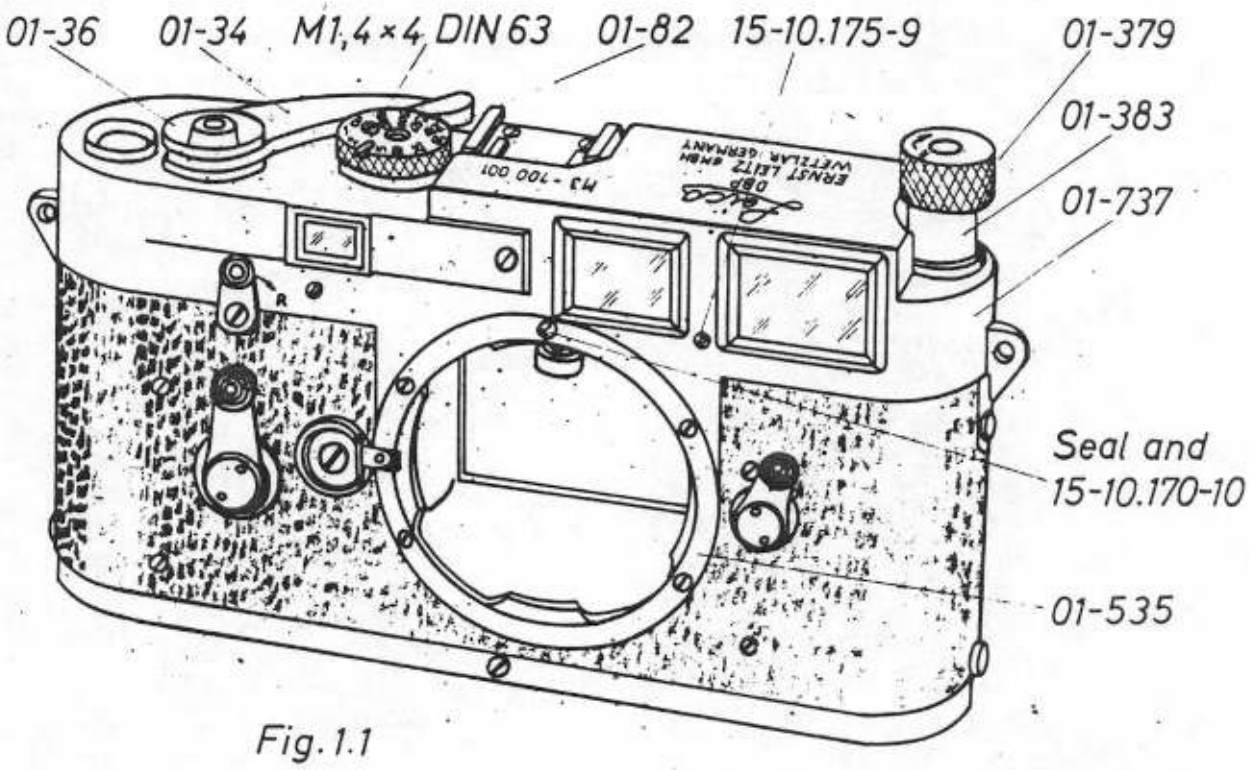

Fig. 1.1

Winding lever 01-34
Unscrew the screw ring 01-36 with the spanner 42-253.01-36 W4, and lift off the winding lever together with the spring 15-12.11-16.

Shutter speed dial 01-82
Unscrew the screw M 1.4 x 4 DIN 63 on top of the shutter speed dial with the 2.5 mm dia. screw driver, and lift off the shutter speed dial 01-82.

Rewind knob 01-379
Hold the sliding sleeve 01-383 with the pliers 42-253.01-U374 W1 and unscrew the rewind knob 01-379 with the lead pliers.

Removing and Refitting the Cover Plate

Sheets 1 and 2

Spanners and Tools

1. Spanner	42-253.01- 36 W4
2. Spanner	42-253.01-157 W2
3. Spanner	42-253.01-483 W8
4. Spanner	42-253.01-486 W1
5. Spanner	42-253.01-494 W4
6. Spanner	42-253.01-498 W2
7. Spanner	42-253.01-722 W2
8. Servicing stamp	42-253.01-Z1 W60
9. Wax 637	
10. Screw driver, 2.5 mm dia.	
11. Tweezers	

Sequence of Operations

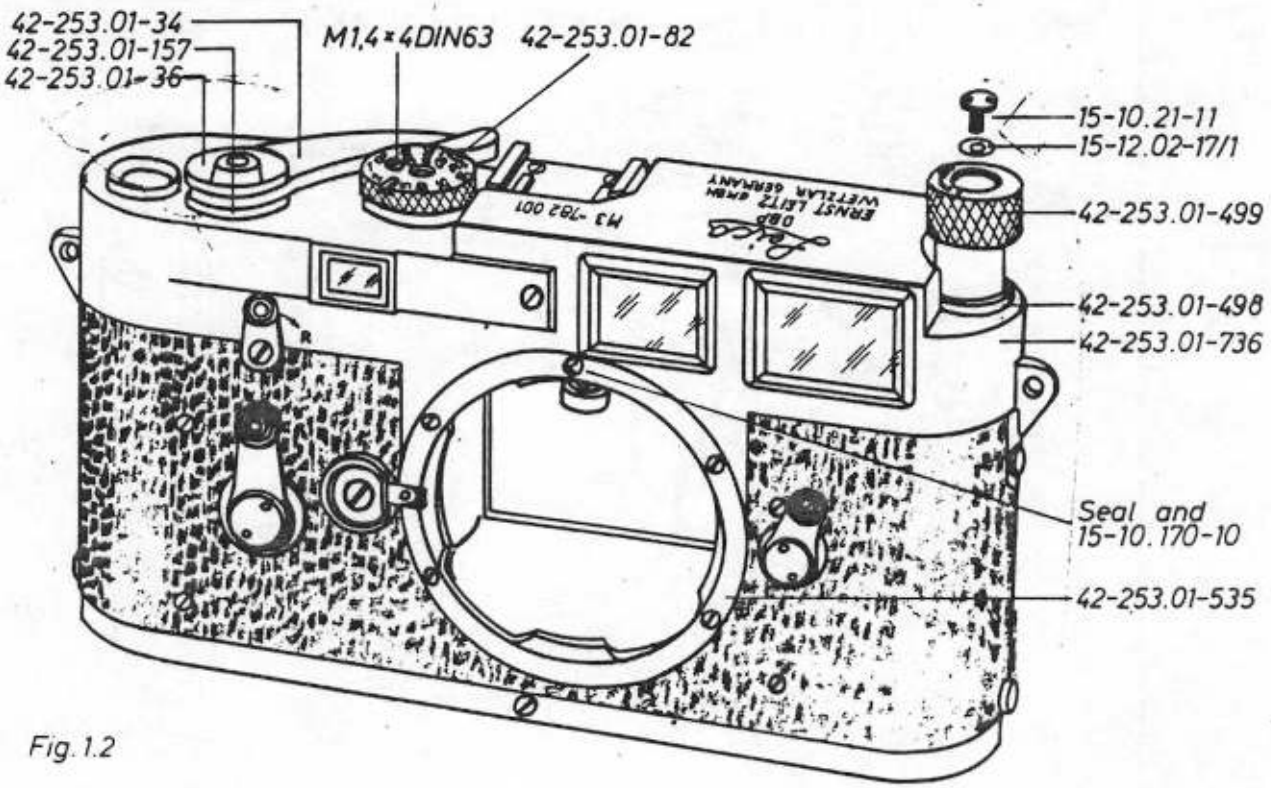

Fig. 1.2

Winding lever 01-34
Unscrew the screw ring 01-36 with the spanner 42-253.01-36 W4. Lift off the winding lever 01-34 together with the spring 15-12.11-16. Unscrew the locking ring 01-157 underneath this with the spanner 42-253.01-157 W2.

Shutter speed dial 01-82
Unscrew the screw M 1.4 x 4 DIN 63 on top of the shutter speed dial 01-82 with the 2.5 mm dia. screw driver, and take off the shutter speed dial 01-82.

Rewind knob 01-499
Pull up the rewind knob 01-499 and hold it in this position. Remove the screw 15-10.21-11 with the spanner 42-253.01-494 W4. Pull off the rewind knob 01-499, washer 15-12.02-17/1, and lift off the carrier 01-495. Unscrew the retaining ring 01-498 with the spanner 42-253.01-498 W2.

Removing and Refitting the Cover Plate

Sheets 1 and 2

Spanners and Tools

1. Spanner	42-253.01- 36 W4
2. Spanner	42-253.01-157 W2
3. Spanner	42-253.01-483 W8
4. Spanner	42-253.01-486 W1
5. Spanner	42-253.01-494 W4
6. Spanner	42-253.01-498 W2
7. Spanner	42-253.01-802 W2
8. Servicing stamp	42-253.01-Z1 W60
9. Wax 637	
10. Screw driver, 2.5 mm dia.	

Sequence of Operations

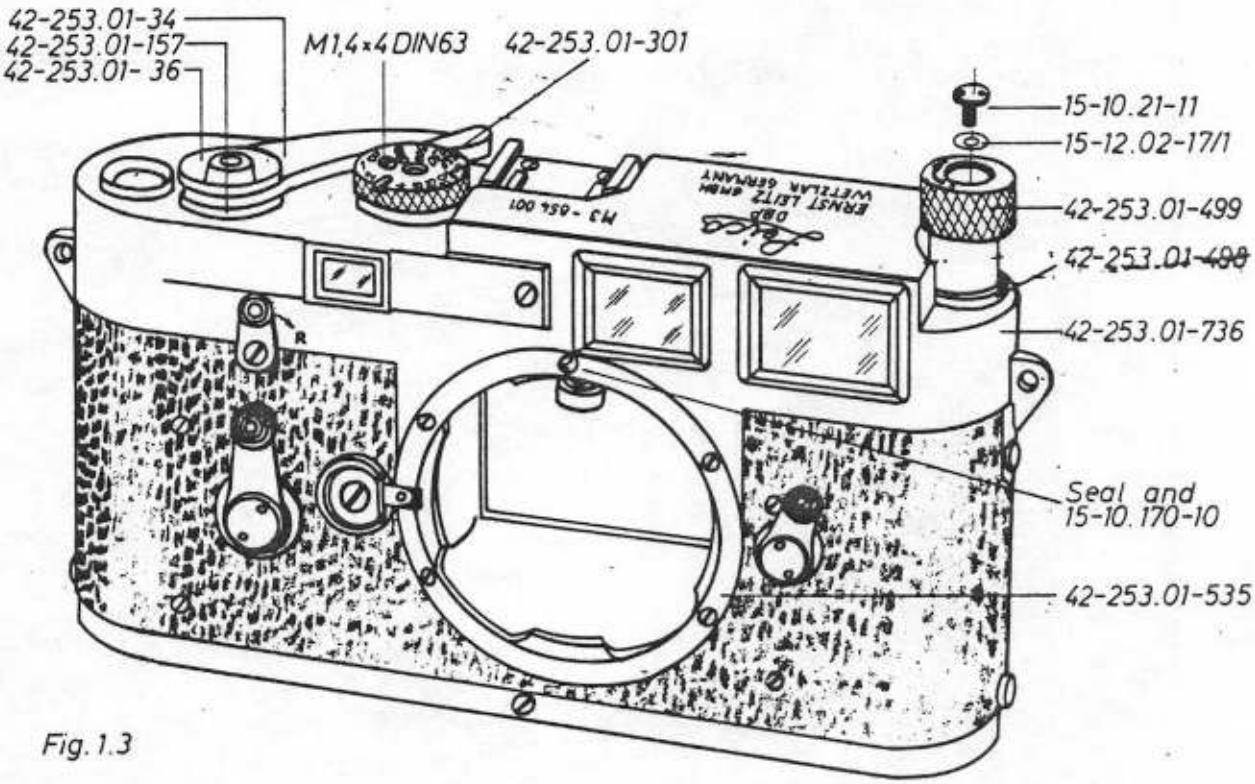

Fig. 1.3

Winding lever 01-34
Unscrew the screw ring 01-36 with the spanner 42-253.01-36 W4. Lift off the winding lever 01-34 together with the spring 15-12.11-16. Unscrew the locking ring 01-157 underneath this with the spanner 42-253.01-157 W2.

Shutter speed dial 01-301
Unscrew the screw M 1.4 x 4 DIN 63 on top of the shutter speed dial 01-301 with the 2.5 mm dia. screw driver, and take off the shutter speed dial 01-301

Rewind knob 01-499
Pull up the rewind knob 01-499 and hold it in this position. Remove the screw 15-10.21-11 with the spanner 42-253.01-494 W4. Pull off the rewind knob 01-499, washer 15-12.02-17/1, and lift off the carrier 01-495. Unscrew the retaining ring 01-498 with the spanner 42-253.01-498 W2.

Removing and Refitting the Cover Plate

Sheets 1 and 2

Spanners and Tools

1. Spanner	42-253.01- 36 W4
2. Spanner	42-253.01-157 W2
3. Spanner	42-253.01-483 W8
4. Spanner	42-253.01-486 W1
5. Spanner	42-253.01-494 W4
6. Spanner	42-253.01-498 W2
7. Spanner	42-253.01-802 W2
8. Servicing stamp	42-253.01-Z1 W60
9. Wax 637	
10. Screw driver, 2.5 mm dia.	

Sequence of Operations

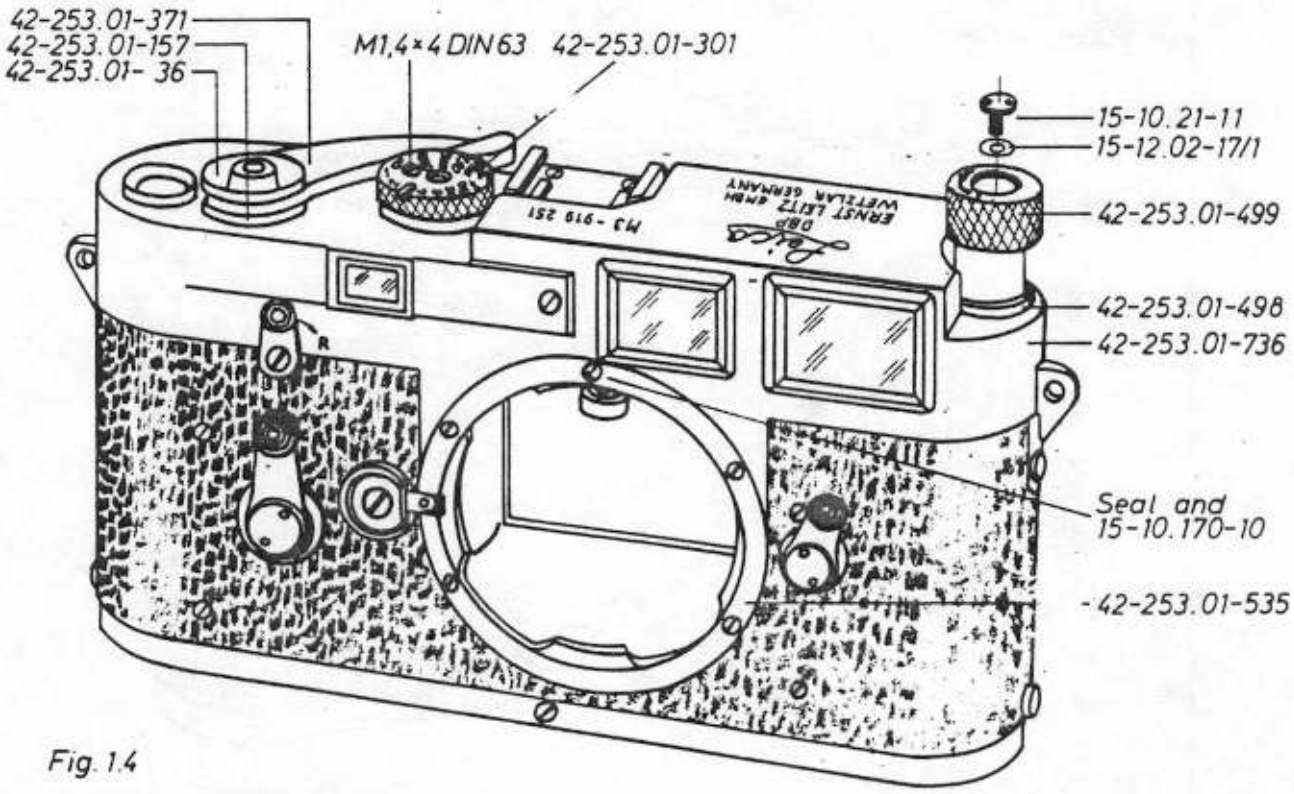

Fig. 1.4

Winding lever 01-371
Unscrew the screw ring 01-36 with the spanner 42-253.01-36 W4. Lift off the winding lever 01-371 together with the spring 15-12.11-16. Unscrew the locking ring 01-157 underneath this with the spanner 42-253.01-157 W2.

Shutter speed dial 01-301
Unscrew the screw M 1.4 x 4 DIN 63 on top of the shutter speed dial 01-301 with the 2.5 mm dia. screw driver, and take off the shutter speed dial 01-301.

Rewind knob 01-499
Pull up the rewind knob 01-499 and hold it in this position. Remove the screw 15-10.21-11 with the spanner 42-253.01-494 W4. Pull off the rewind knob 01-499, washer 15-12.02-17/1, and lift off the carrier 01-495. Unscrew the retaining ring 01-498 with the spanner 42-253.01-498 W2.

Removing and Refitting the Cover Plate

Continued from sheet 1

Accessory shoe 01-777
Unscrew the four screws 15-10.24-5, and take off the accessory shoe 01-777, the pressure cheek 01-780, and the spring 01-781.
Unscrew the two covering rings 01-486 with the spanner 42-253.01-486 W1.
Unscrew the two sockets 42-253.01-483 with the spanner 42-253.01-483 W8.

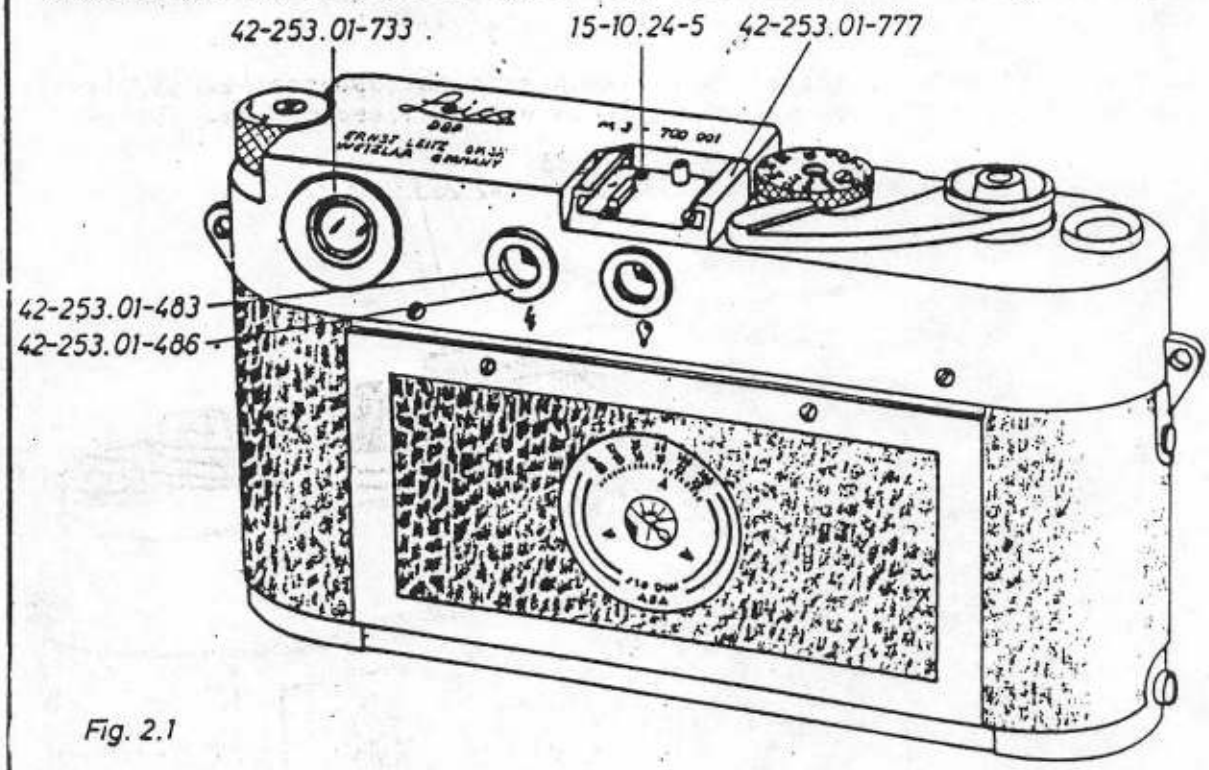

Fig. 2.1

Rangefinder eyepiece
Unscrew the eyepiece 01-733 with the spanner 42-253.01-36 W4, and lift out the sealing washer 01-734 with the tweezers. Unscrew the eyepiece lens mount 17-136 with the spanner 42-253.01-722 W2, and lift off the spacing ring 15-12.10-12.

Cover plate 01-726
Remove the four screws 15-10.175-9 around the sides of the cover plate 01-726. Remove the seal from the top centre hole of the bayonet ring 01-535, and unscrew the screw 15-10.170-10 underneath the seal with the 2.5 mm dia. screw driver. Lift off the cover plate from above.

Note

Leica models up to No. 702 999 do not have the screw 15-10.170-10 (bayonet ring 01-1012 is fitted). On these cameras the cover plate 01-726 can be lifted off after removing the four screws 15-10.170-9. On Leica cameras from 703 000 to 735 999 there is no need to unscrew the screw 15-10.170-10 in order to lift off the cover plate.

Refit the cover plate by proceeding in the reverse order.

Fill the top fixing hole of the bayonet ring (see fig.1.1) with a wax seal, and mark this seal with the servicing stamp.

Check: Rangefinder (see sheets 10 to 13), winding mechanism, and rewinding mechanism.

Removing and Refitting the Cover Plate

Continued from sheet 1

Accessory shoe 01-777
Unscrew the four screws 15-10.24-5, and take off the accessory shoe 01-777, the pressure check 01-780, and the spring 01-781.

Unscrew the two covering rings 01-486 with the spanner 42-253.01-486 W1.
Unscrew the two sockets 42-253.01-483 with the spanner 42-253.01-483 W8.

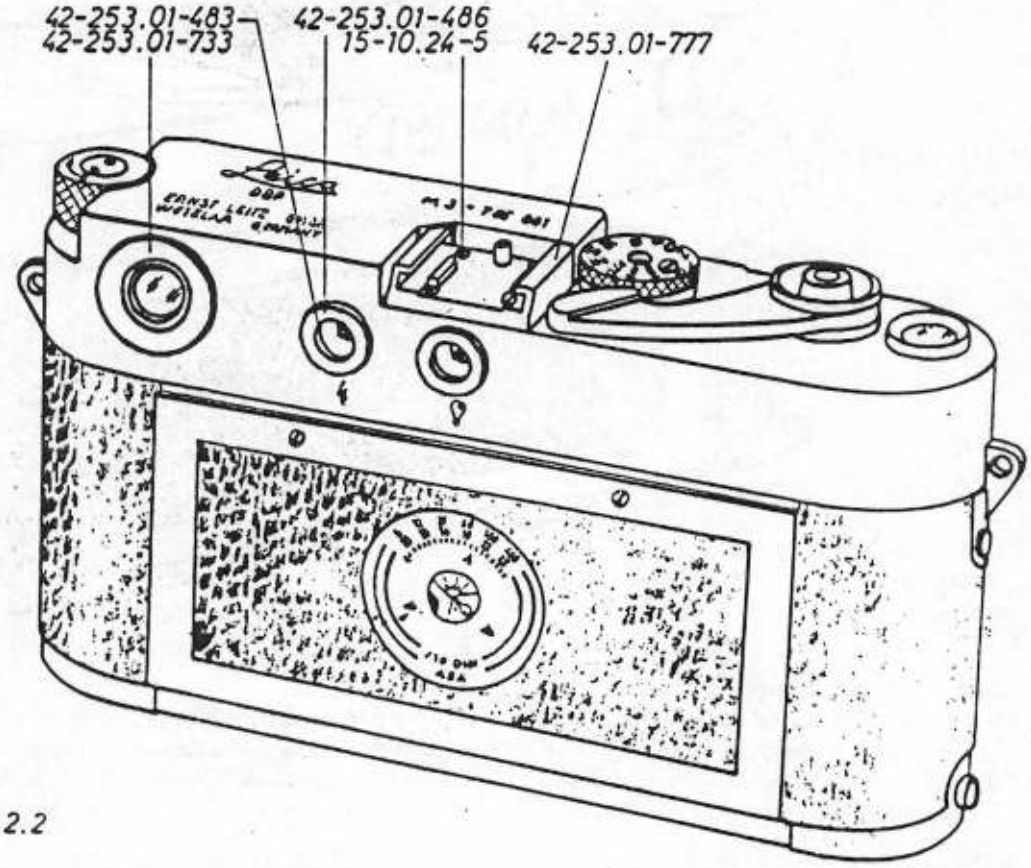

Fig.2.2

Rangefinder eyepiece
Unscrew the eyepiece 01.733 with the spanner 42-253.01-36 W4, and lift out the sealing washer 01-734 with the tweezers. Unscrew the eyepiece lens mount 17-136 with the spanner 42-253.01-722 W2, and lift off the spacing ring 15-12.10-12 (see sheet 3.1 of the Spare Parts List for the Leica M3)
Cover plate 01-725
Remove the seal from the top centre hole of the bayonet ring 01-535, and unscrew the screw 15-10.170-10 underneath the seal with the 2,5 mm dia. screw driver. Lift off the cover plate from above.

Refit the cover plate by proceeding in the reverse order.

Fill the top fixing hole of the bayonet ring (see fig. 1.4) with a wax seal, and mark this seal with the servicing stamp.

Check: Rangefinder (see sheets 10 to 13), winding mechanism, and rewinding mechanism.

Removing and Refitting the Cover Plate

Continued from sheet 1

Accessory shoe 01-777
Unscrew the four screws 15-10.24-5, and take off the accessory shoe 01-777, the pressure check 01-780, and the spring 01-781.

Unscrew the two covering rings 01-486 with the spanner 42-253.01-486 W1.
Unscrew the two sockets 42-253.01-483 with the spanner 42-253.01-483 W8.

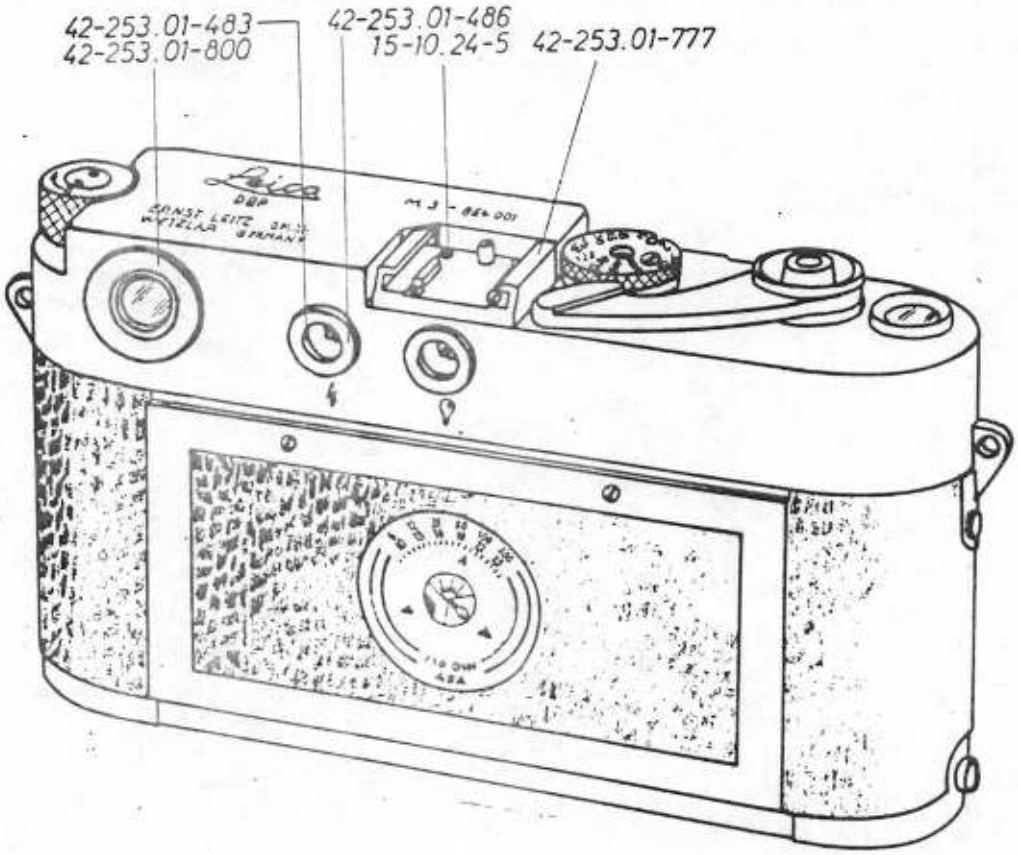

Fig. 2.3

Rangefinder eyepiece
Unscrew the eyepiece 01-799 with the spanner 42-253.01-36 W4. Unscrew the retaining ring 01-802 with the spanner 42-253.01-802 W2 and take out the eye lens.

Cover plate 01-725
Remove the seal from the top centre hole of the bayonet ring 01-535, and unscrew the screw 15-10.170-10 underneath the seal with the 2,5 mm dia. screw driver. Lift off the cover plate from above.

Refit the cover plate by proceeding in the reverse order.

Fill the top fixing hole of the bayonet ring (see fig. 1.3) with a wax seal and mark this seal with the servicing stamp.

Check: Rangefinder (see sheets 10 to 13), winding mechanism, and rewinding mechanism.

Daniel D. Teoli Jr. Archival Collection

Removing and Refitting the Cover Plate

Continued from sheet 1

Accessory shoe 01-777
Unscrew the four screws 15-10.24-5, and take off the accessory shoe 01-777, the pressure check 01-780, and the spring 01-781.

Unscrew the two covering rings 01-486 with the spanner 42-253.01-486 W1.
Unscrew the two sockets 42-253.01-483 with the spanner 42-253.01-483 W8.

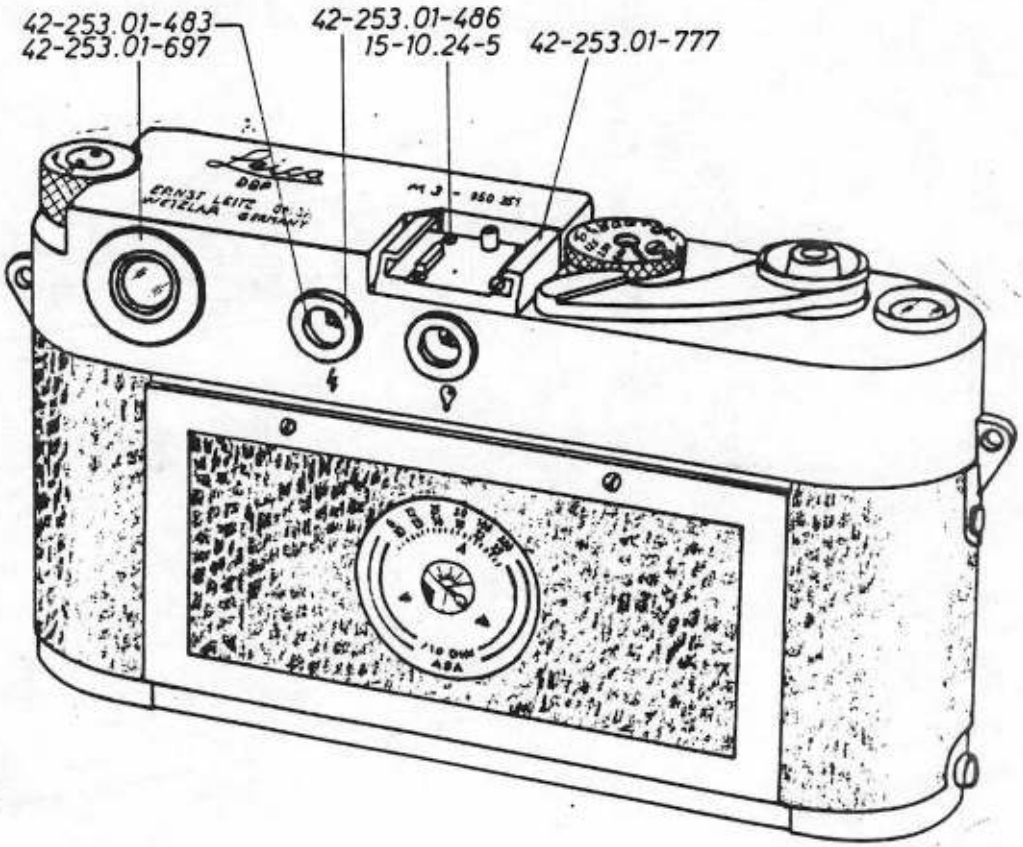

Fig. 2.4

Rangefinder eyepiece
Unscrew the eyeypiece lens 01-697 with the spanner 42-253.01-36 W4.

Cover plate 01-725
Remove the seal from the top centre hole of the bayonet ring 01-535, and unscrew the screw 15-10.170-10 underneath the seal with the 2,5 mm dia. screw driver. Lift off the cover plate from above.

Refit the cover plate by proceeding in the reverse order.

Fill the top fixing hole of the bayonet ring (see fig. 1.4) with a wax seal, and mark this seal with the servicing stamp.

Check: Rangefinder (see sheets 10 to 13), winding mechanism, and rewinding mechanism.

Removing and Refitting the Housing

Sheets 3 and 4

Note

With Leica models up to No. 702 999 the cover plate has to be removed first (see sheets 1 and 2). This uncovers a screw at the top left of the bayonet ring which must first be unscrewed.
With Leica models from No. 703 000 to 735 999 (recognisable by the fifth screw 15-10.170-10 at the top centre of the bayonet ring) the cover plate can remain on the camera when removing the housing. The screw mentioned above must, however, be unscrewed first.

Spanners and Tools

1. Spanner	42-253.01-596 W2
2. Spanner	42-253.01-597 W2
3. Servicing stamp	42-253.01-Z1 W60
4. Wax 637	
5. Screw driver, 2.5 mm dia.	
6. Screw driver, 3.2 mm dia.	
7. Screw driver, 3.8 mm dia.	

Sequence of Operations

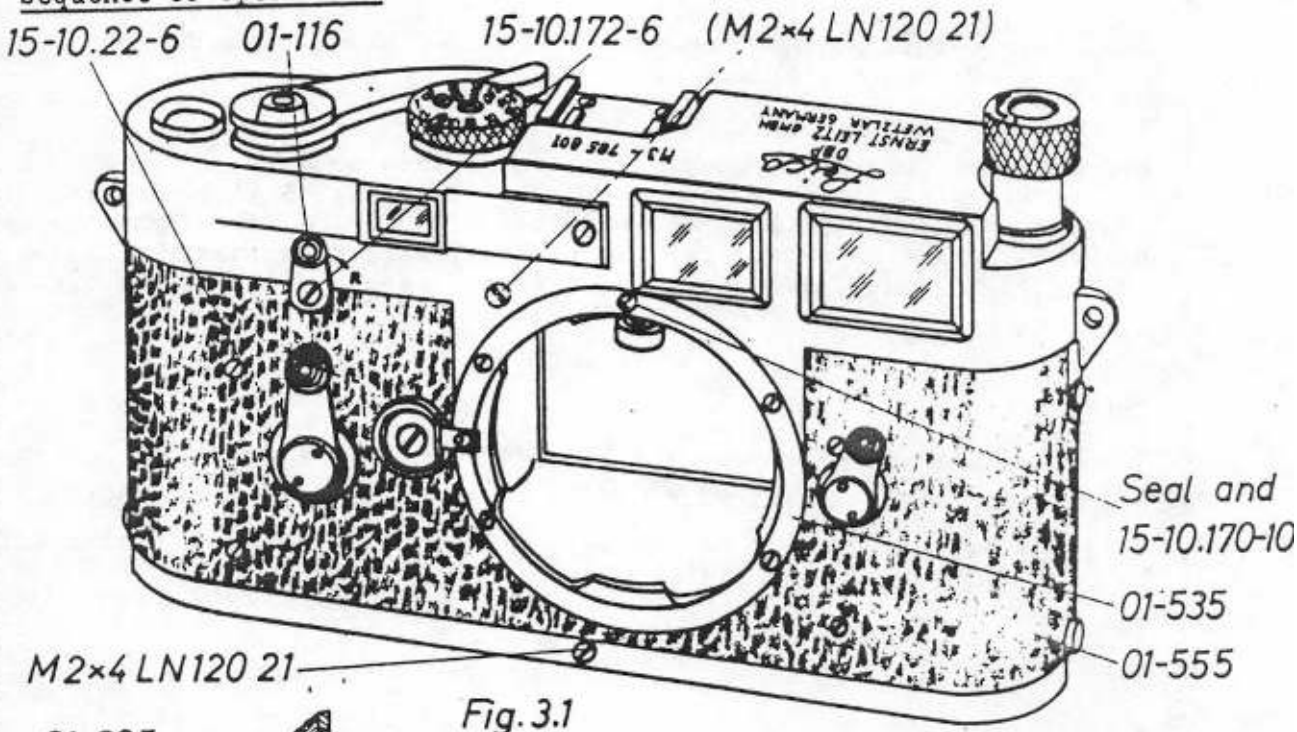

Fig. 3.1

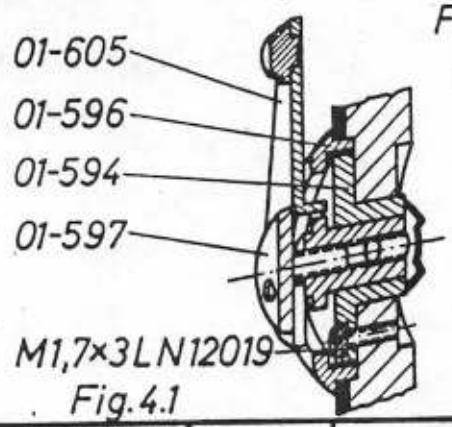

Fig. 4.1

Reversing lever 01-116
Unscrew the screw 15-10.172-6 with the 3.8 mm dia. screw driver, and pull out the lever 01-116.

Self-timer
Unscrew the screw 01-597 (left-hand thread) with the spanner 42-253.01-597 W2. Lift off the lever 01-605. Unscrew the cover ring 01-596 with the spanner 42-253.01-596 W2, unscrew the three screws M 1.7 x 3 LN 120 19 with the 2.5 mm dia. screw driver, and take off the flange 01-594.

Removing and Refitting the Housing

Continued from sheet 3

Housing

Remove the base plate 01-751.
Unscrew the four screws 15-10.22-6 and the screw M 2 x 4 LN 120 21 with the 3.2 mm dia. screw driver. Remove the seal from the top hole of the bayonet ring, and unscrew the screw 15-10.170-10 underneath with the 2.5 mm dia. screw driver.

Finder frame selector
On Leica models with built-in finder frame selector remove the screw 15-10.174-7 and the two screws M 1.7 x 3.5 LN 120 25 with the 2.5 mm dia. screw driver. Lift off the cover plate 01-90 and the locking plate 01-78 (see fig. 5.1 on sheet 5).

Pull off the housing from below.
Take care not to damage the cover strip 01-413, and also do not unhook the spring 01-630 at the slider bars.

Refit the housing by proceeding in the reverse order.
Before screwing in the screws 15-10.22-6 (see fig. 3.1) insert the light trapping strip 01-507 from the cassette side of the Leica into the slots provided in the main body for the purpose. Make sure that the closed section of the light trapping strip faces towards the open side of the camera.

Check

Setting of the self-timer mechanism (see sheets 8 and 9).

Alignment of the bayonet ring 01-535 to the film plane (see sheet 18).

Fill the top fixing hole of the bayonet ring (see fig.1.1) with a wax seal, and mark this seal with the servicing stamp.

Removing and Refitting the Rangefinder

Sheet 5

Spanners and Tools

1. Screw driver — 42-253.01- 630 W6
2. Screw driver — 42-253.01- 114 W1
3. Spanner — 42-253.01-U804 W2
4. Screw driver, 2.5 mm dia.

Sequence of Operations

Remove the cover plate (see sheets 1 and 2).

Remove the base plate 01-751.

Unscrew the two screws M 1.7 x 3.5 LN 120 25 and the screw 15-10.174-7 with the 2.5 mm dia. screw driver, and take off the cover plate 01-90 and the locking plate 01-78.

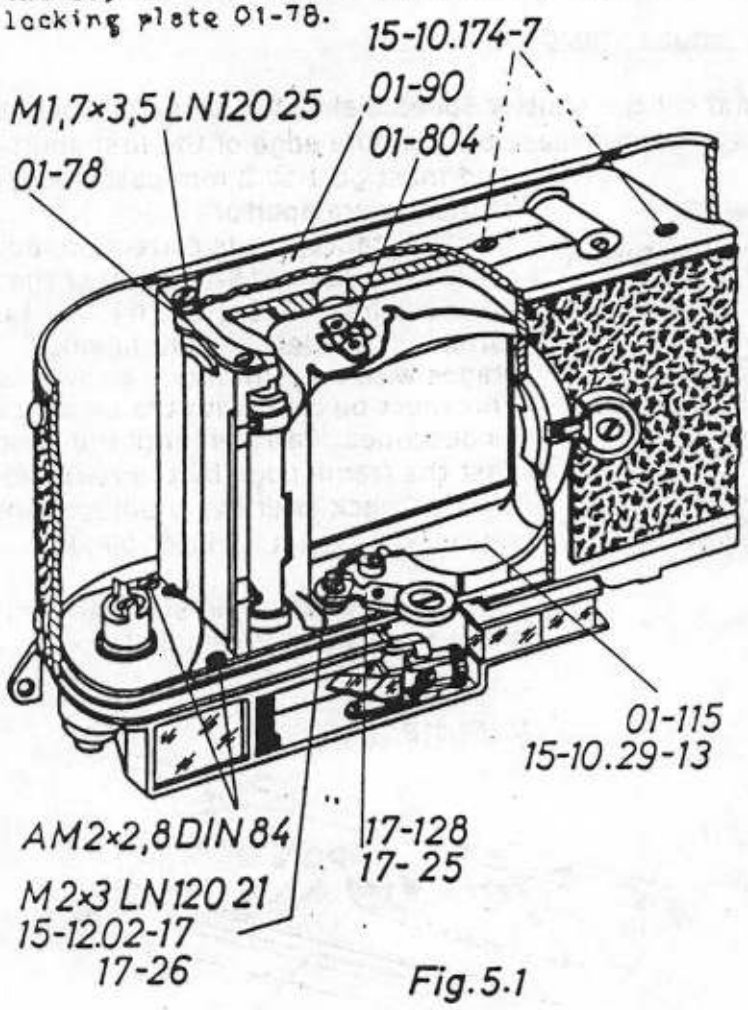

Fig. 5.1

Release the cover piece 01-804 with the spanner 42-255.01-U804 W2 and lift out.

Unscrew the screw M 2 x 2.6 LN 120 21 with the screw driver 42-253.01-630 W6, a lift off the washer 15-12.02-17, the excentric cam 17-26, and the couplin lever with the roller 17-1

Unscrew the screw 15-10.29 together with the excentri cam 01-115, using the scre driver 42-253.01-114 W1.

Unscrew the two screws AM 2 x 2.8 DIN 84 with the scr driver 42-253.01-630 W6, a lift off the rangefinder.

Refit the rangefinder by proceeding in the reverse order.

For adjustment of the rangefinder see sheets 10 to 13.

Adjusting the Brakes

Sheets 6 and 7

Tools

1. Screw driver, 2.5 mm dia.
2. Screw driver, 4 mm dia.

Sequene of Operation

Unscrew the two screwsM 1.7 x 3.5 LN and the screw 15-10.17-7 with the 3.5 mm screw driver, and take off the cover plate 01-90 and the locking plate 01-78 (see fig. 5-1 on sheet 5)

The Brake of the First Shutter Blind

Tension the shutter, and set the shutter speed dial to B. Let the first shutter blind run down by pressing the release button. The edge of the first shutter blind must go 1 to 2 mm past the edge of the picture aperture (See fig. 6.1) If this distance needs correction, adjust the setting screw 15-10.21-6 of the first shutter blind brake (see fig. 7.1) by turning to the left or right in small stages with the 4 mm dia. screw driver. This must be done with the Leica shutter as described. Carry on until the blind runs past the frame edge by the required 1 to 2 mm. Check after every adjustment by releasing the first shutter blind.

Never turn this setting screw through more than 120 degrees by force.

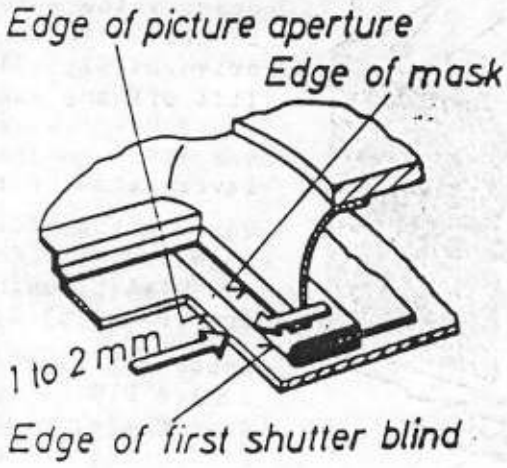

Fig.6.1

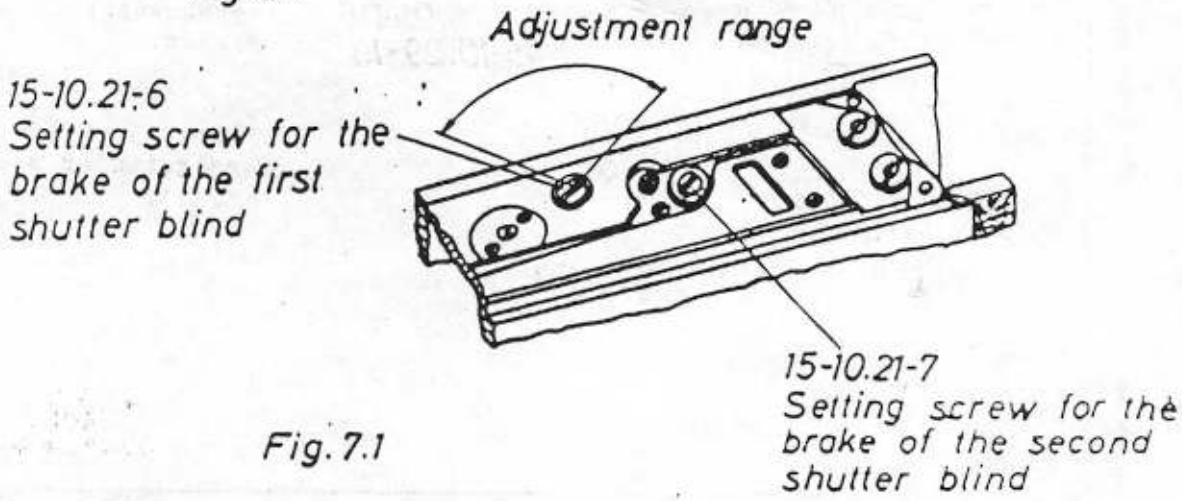

Fig.7.1

Adjusting the Brakes

Continued from sheet 6

The Brake of the Second Shutter Blind

Tension the Leica shutter. Set the shutter speed dial to 1/50 (⚡) second. Press the shutter release button. When the shutter has run down, it should still be possible to pull the second blind with the thumb and index finger through 0.5 mm in the direction of its travel (see fig. 8.1). If any adjustment is repuired, turn the setting screw 15-10.21-7 of the second shutter blind brake (see fig. 7.1) to the left or right with the 4 mm dia. screw driver until the above movement is as specified. Check after every adjustment of the setting screw by pulling on the second shutter blind as described above.

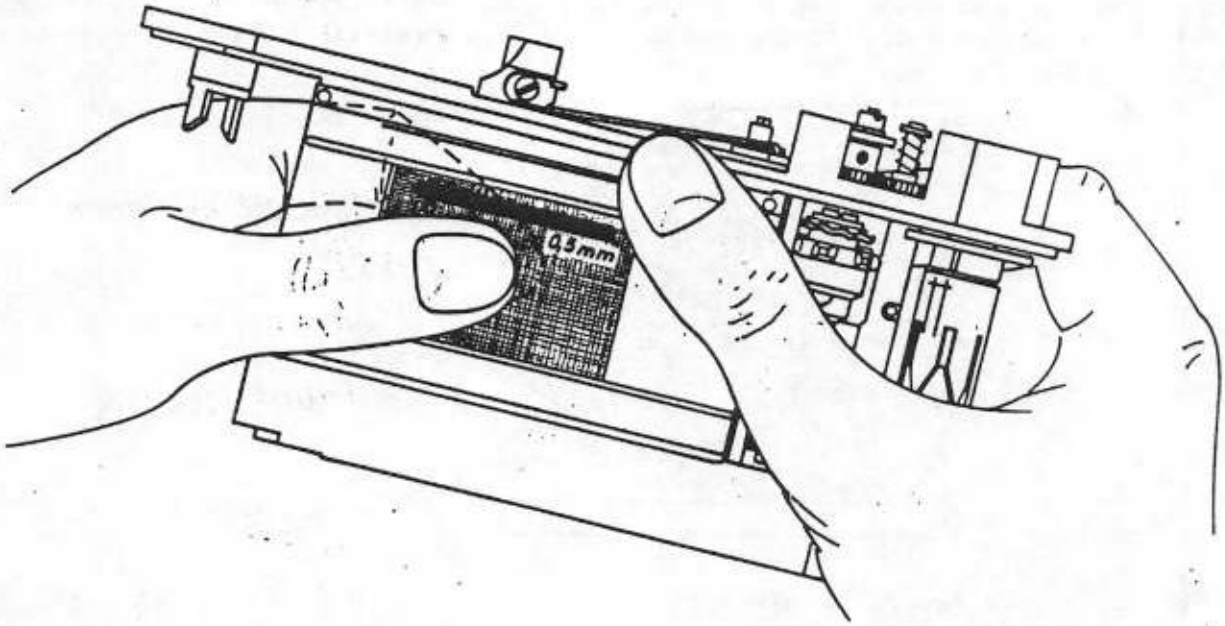

Fig. 8.1

Daniel D. Teoli Jr.
Archival Collection

Fitting and Setting the Self-timer Mechanism

Sheets 8 and 9

Spanners and Tools

1. Spanner 42-253.01-596 W2
2. Spanner 42-253.01-597 W2
3. Screw driver, 2.5 mm dia.

Sequence of Operations

Fitting

Insert the bushing 01-595, together with the spring washer 15-12.03-13 and the washer 15-12.03-14 into the flange 01-594. Screw the left-handed coupling screw 01-593 into the bushing 01-595, and insert all together in the camera body. If necessary, add a adjustment washer 01-566. The guide segment of the flange 01-594 must be at the right when viewed as in the illustration (see Spare Parts List 42-253, sheet 6.1). Turn the flange 01-594 while inserting it into the body, to engage the coupling screw with the self-timer mechanism.

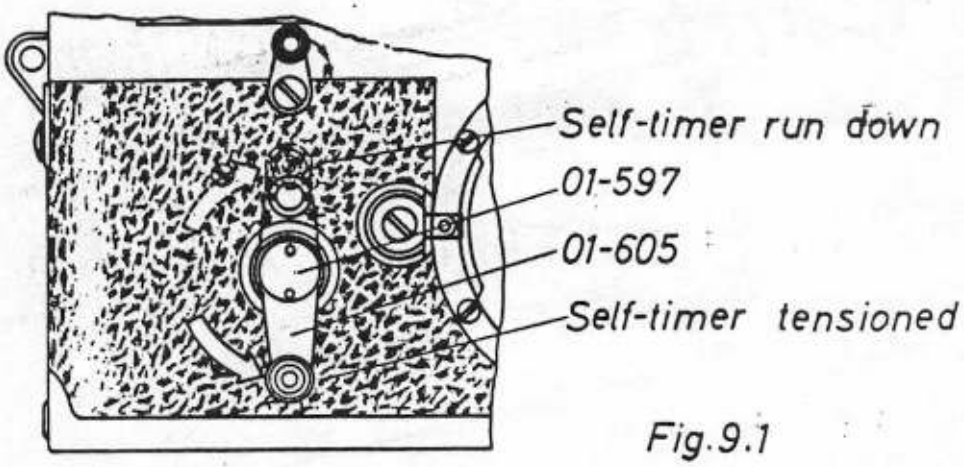

Fig.9.1

Fasten the flange 01-594 with three screws M 1.7 x 3 LN 120 19, using the 2.5 mm dia. screw driver.
Screw the cover plate 01-596 over the flange 01-594, using the spanner 42-253.01-596 W2.
Fit the tensioning lever 01-605 so that it points upwards, and fix it with the screw 01-597 (left hand thread), using the spanner 42-253.01-597 W2.

Setting

Swing the tensioning lever from the "run down" position (see fig. 9.1) to the "tensioned" position, and hold it there.

Fitting and Setting the Self-timer Mechanism

Continued from sheet 8

Unscrew the screw 01-597 by one full turn with the spanner 42-253.01-597 W2, lift the tensioning lever, and quickly swing it into the "run down" position. Immediately tighten the screw 01-597.

Repeat this sequence of tensioning, swinging round, and tightening two or three times.

Set the shutter speed dial to B, tension the Leica shutter, tension the self-timer mechanism, and let it run down.
As the mechanism runs down, it must not release the Leica shutter. If it does release the shutter, repeat the above procedure of tensioning, swinging round, and tightening.

Once the mechanism does not release the Leica shutter on running down, hold the lever 01-605 of the self-timer mechanism in the "run down" position, and unscrew the screw 01-597 with the spanner 42-253.01-597 W2 until the self-timer mechanism runs down further. During this running down the first shutter blind will be released, followed eventually by the second shutter blind. Immediately the second shutter blind has closed over the picture aperture, tighten the screw 01-597 again.

Checking

Leave the shutter speed dial set to B, tension the Leica shutter and tension the self-timer. Let the self-timer run down and observe the shutter binds. The shutter blinds should be released at the positions of the lever as shown in fig. 10.1.

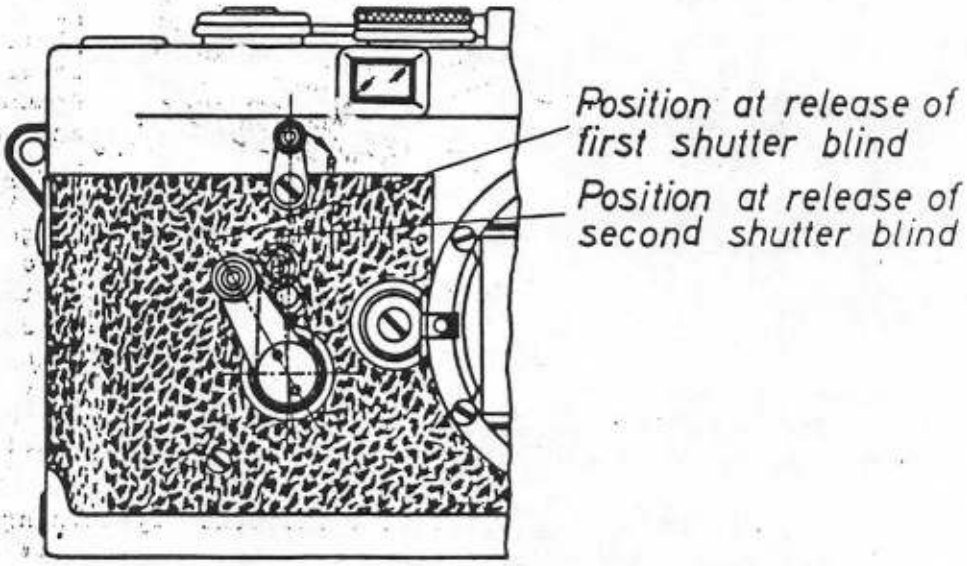

Fig. 10.1

Adjusting the Rangefinder

Sheets 10 to 13

Setting Instruments, Gauges, and Tools

1. Table stand	42-253.01 Z1	W 7
2. Camera holder	42-253.01 Z1	W 9
3. Graticule housing for 1 metre setting	42-253.01 Z1	W63
4. Graticule for 1 metre setting	42-700.01 Z1	W20
5. Graticule housing for 10 metre setting	103.25.2	
6. Graticule for 10 metre setting	103.25.16	
7. Distance setting gauge	42-582.01 Z1	A10*
8. Finder mask setting gauge	42-253.01 Z1	A107
9. Spanner	42-253.01-U804	W 2
10. Spanner	42-253.01- 648	W 7
11. Bending tool	42-253.01-U700	W 2
12. Angle screw driver	42-253.01- 703	W 2
13. Screw driver	42-253.01- 630	W 6
14. Screw driver	42-253.01- 115	W 1
15. Screw driver, 1.8 mm dia.		
16. Screw driver, 2.2 mm dia.		
17. Screw driver, 2.8 mm dia.		
For Leica models from No. 854 001 onwards:		
18. Cover plate	42-253.17- 23	
19. Viewing magnifier in mount	42-253.17-136	
20. Intermediate ring	15-12.10-12/1	
For Leica models from No. 950 351 onwards:		
21. Eyepiece lens holder	42-253.17 Z1 W5	

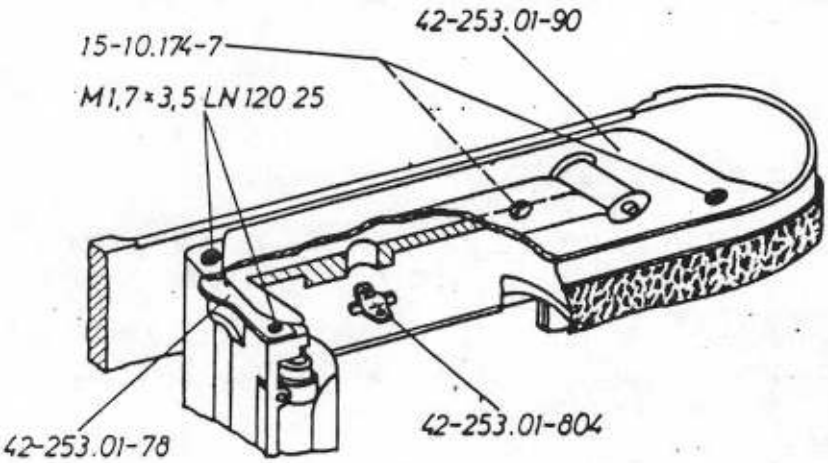

Fig. 11.1

Sequence of Operations

Unscrew the two screws M1.7x3.5 LN 120 25 and the two screws 15-10.174-7 with the 2.2 mm dia. screw driver. Remove the cover plate 01-90 and the locking plate 01-78. Release the cover piece 01-804 with the spanner 42-253.01-U804 W2, and take out (see fig.11.1).

Measuring Distances

Fit the distance setting gauge 42-582.01 Z1 A10 into the Leica, mount it on the camera holder 42-253.01-Z1 W9, and swing the viewing telescope in position to check the infinity setting on the graticule housing for the 10 metre setting. Carry out any adjustment necessary on the excentric shaft 17-131 (see fig. 12.1).

Bring the rangefinder images into coincidence by turning the shaft of the excentric cam to the left or right with the angle screw driver 42-253.01-703 W2.

* A Leica lens or the distance setting gauge 42-253.01 Z1 A54 can also be used.

Adjusting the Rangefinder

Continued from sheet 10

Swing down the viewing telescope away from the rangefinder eyepiece, and set the distance setting gauge to 1 metre. The hair line cross of the graticule housing for the 1 metre setting must register exactly; the thin lines at each side being used as additional sighting lines. If any adjustment is necessary, lengthen or shorten the roller arm 17-129 as follows: slack off the screw M 2 x 3 LN 120 21 with the screw driver 42-253.01-630 W6, and swing the excentric cam 17-26 (see fig. 12.1) round until the hair line cross of the 1 metre setting is in exact register. Then tighten the screw M 2 x 3 LN 120 21 again. Alternately repeat the correction of the infinity and 1 metre settings until both are correct.

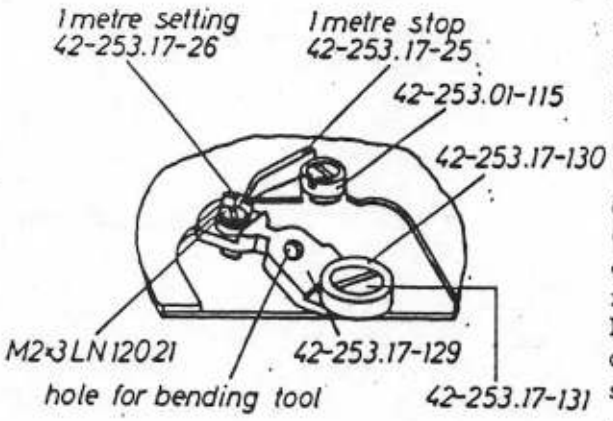

Fig. 12.1

After adjusting the measuring distances with screw driver 42-253.01-115 W1 set the position of the excentric cam 01-115 so that it contacts the roller arm 17-129 just beyond the infinity position. Before screwing down the excentric, cam coat the screw thread with protective lacquer. Finally set the stop disc 17-25 so that it contacts the excentric cam 01-115 just below the 1 metre setting.

Vertical Image Position

When adjusting the rangefinder settings between infinity and 1 metre, keep correcting any errors in the vertical image position. For this purpose remove the screw 01-731 (see fig. 13.1) from the cover plate with the 2.8 mm dia. screw driver, and adjust the vertical image position on the slot visible behind the screw hole. Use the 2.2 mm dia. screw driver for this. Finally replace the screw 01-731 in the cover plate.

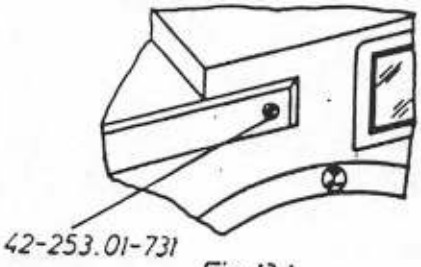

Fig. 13.1

Alignment of the Guide Roller

The movement of the bearing surface of the distance setting gauge 42-582.01 Z1 A10 is extended to two levels at the 10-metre setting (see fig. 14.1). This permits checking of the exact vertical alignment of the guide roller 17-130. On turning the distance setting gauge from the left to the right stop at the 10 metre setting, the rangefinder image of the Leica must remain steady and unchanged in both positions. If the rangefinder image moves, the roller arm 17-129 carrying the guide roller (see fig. 12.1) needs straightening. Insert the bending tool 42-253.01-U700 W2 in the corresponding hole in the roller arm 17-129 (see fig. 12.1), and bend the roller arm with the guide roller into the correct position. Re-check constantly with the distance setting gauge. This alignment is best carried out at the start of the rangefinder adjustment.

Fig. 14.1

Adjusting the Rangefinder

Continued from sheets 10 and 11

Parallax Correction

Mount the Leica with the distance setting gauge 42-582.01 Z1 A10* on the camera holder 42-253.01-Z1 W9. Swing the ground glass screen attached to the camera holder in front of the picture aperture of the camera, and set the distance setting gauge to 1 metre. Use the ground glass screen to align the picture aperture of the camera accurately with the continuous frame marked on the graticule of the 1 metre graticule housing. The camera holder can be adjusted vertically and horizontally for this purpose by means of the two milled screws at the right hand side. When the Leica is accurately aligned, the 9 cm finder frame of the camera must register exactly with the continuous frame marked on the graticule. On moving the distance setting gauge to the infinity position, the finder mask should move steadily towards the broken frame outline. At the infinity setting slight deviations between the frame on the graticule and the finder frame are permissible.

If any adjustment is required first remove the cover plate (see sheets 1 and 2).

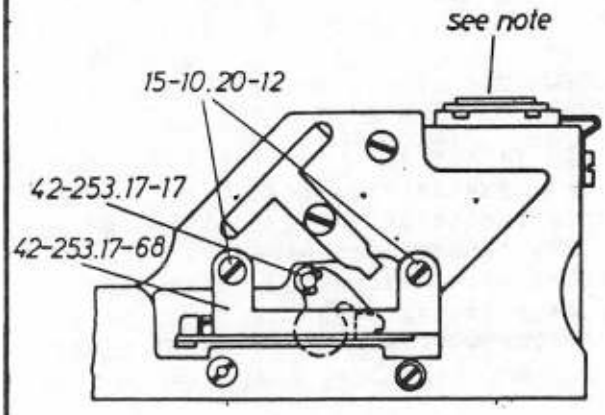

Fig. 15.1

Note

On Leica models from No. 854 001 onwards the cover plate 42-253.17-23 with the viewing magnifier 42-253.17-136 and the intermediate ring 15-12.10-12/1 must be used during the adjustment procedure.

Mount the cover plate 42-253.17-23 on the rangefinder with two screws 15-10.140-22 and two screws 15-10.140-23. Remove only before refitting the cover plate 01-736. For Leica models from No 950 351 onwards use the eyepiece lens holder 42-253.17 Z1 W5.

Turn the stop 17-17 (see fig. 15.1) to the left or right with the spanner 42-253.01-648 W7 until the frames coincide.

Further adjustment is possible by displacing the whole graticule carrier 17-68. Slack off the screws 15-10.20-12 (see fig.15.1) and adjust the graticule carrier accordingly.

Check that the parallax adjusting mechanism always moves smoothly and without restraint on turning the distance setting gauge from the infinity position to the 1 metre setting.

Finder Masks

Insert and lock the finder mask setting gauge 42-253.01-Z1 A107 in the Leica. Engage the setting knob of the gauge in the midway position, indicating a focal length of 5 cm. Watch the finder field, and rotate the finder mask setting gauge about its axis on the Leica as far as the extended slot of the gauge allows it. At the same time keep depressing the pressure plate in the upper part of the gauge as far as it will go. Neither the 9 cm nor the 13.5 cm finder frame must become visible. Then set the finder mask setting gauge to the 9 cm stop, rotate the gauge about its axis, and depress the pressure plate. Repeat this at the 13.5 cm stop.

* A 9 cm lens can also be used instead.

Adjusting the Rangefinder

Continued from sheets 10, 11, and 12

During this test the 9 cm and 13.5 cm finder frames, according to the position of the finder mask setting gauge, must always remain visible. If the setting needs correction, first remove the cover plate (see sheets 1 and 2).

Leica Nos. 700 001 to 854 000

With the finder mask setting gauge in the 5 cm position adjust the setting shaft 17-12 (see fig. 16.1) with the 1.8 mm dia. screw driver.
With the finder mask setting gauge alternately in the 9 cm and the 13.5 cm position, unscrew the screw M 1.7 x 3 LN 120 25 with the 2.2 mm dia. screw driver in order to adjust the limiting stops. Set the stop bracket 17-40 (see fig. 16.1) accordingly.

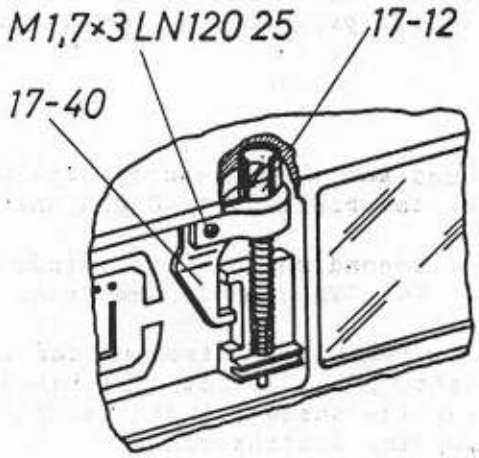

Fig. 16.1

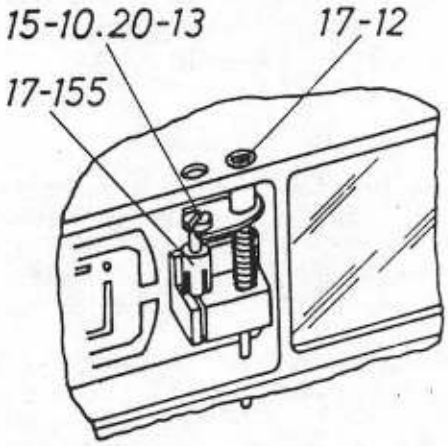

Fig. 17.1

Leica Nos. 854 001 onwards

With the finder mask setting gauge in the 5 cm position adjust the setting shaft 17-12; at the 9 cm position the setting screw 15-10.20-13; and at the 13.5 cm position the setting nut 17-155 (see fig. 17.1). Use the 1.8 mm dia. screw driver.

Refit the cover plate (see sheets 1 and 2).

Re-check the focusing movement.

Setting and Testing the Shutter Speeds

Sheets 14 to 16

Testing Instruments and Tools

1. Spring tension gauge	42 216 Z1 W42
2. Speed testing instrument	42-253.01 Z1 W111*
3. Light drum	42-253.01 Z1 W100
4. Spanner	42-253.01-U281 W 3
5. Speed pattern	42-253.01 Z1 A 56
6. Mirror	42-253.01 Z1 W 41
7. OBAMA oil injector	
8. Screw driver, 1.8 mm dia.	
9. Screw driver, 2.2 mm dia.	
10. Screw driver, 2.8 mm dia.	

The 1/1000, 1/500, and 1/250 second settings are checked with the light drum 42-253.01-Z1 W100 rotating at 280 revs. per minute.

The tools list specifies the latest model of the light drum 42-253.01-Z1 W100. Any older type of light drum is equally suitable, provided it permits exact setting of the running speed.

Sequence of Operations

Unscrew the two screws M 1.7 x 3.5 LN 120 25 and the two screws 15-10.174-7 with the 2.2 mm dia. screw driver. Remove the cover plate 01-90 and the locking plate 01-78 (see fig. 5.1 on sheet 5).
Check the tension of the spring roller of the second shutter blind (see fig. 18.1) with the spring tension gauge 42 216-Z1 W42. This should register 19 ± 2.
To adjust the spring tension of the second shutter blind introduce the 2.8 mm dia. screw driver into the slot of the shaft, press it down into the shaft bearing 01-257, and set the tension by turning the screw driver (see fig. 18.1). Withdrawing the screw driver re-engages the setting ring.

Set the shutter speed dial to 500, and check by looking through the camera whether the shutter opens. Increasing the tension of the spring roller of the first blind will open the shutter.

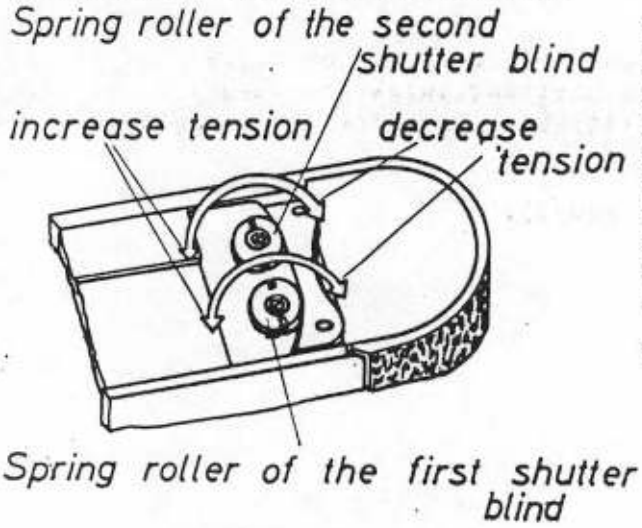

Fig.18.1

Insert the speed pattern 42-253.01-Z1 A56 into the picture aperture of the camera from the back, and check the curve of the second shutter blind against the light drum. If the curve pattern of the camera shutter is steeper than the speed pattern, the spring roller of the second shutter blind needs tensioning. If the shutter curve is flatter, decrease the tension.

*The slow speed testing instrument 42 216 Z1 W67 is equally suitable.

Setting and Testing the Shutter Speeds

Continued from sheet 14

The image of the slit of the shutter must be slightly wider at the lower edge of the picture frame than at the top. The drum images (fig. 19.1) show the required pattern. Increasing the tension of the spring roller of the first shutter blind widens the slit image at the lower edge of the picture frame, decreasing the tension makes it narrower.

Fig. 19.1

If the width of the slit does not correspond to the drum image for 1/500 second (see fig. 19.1), remove the cover plate (see sheets 1 and 2).

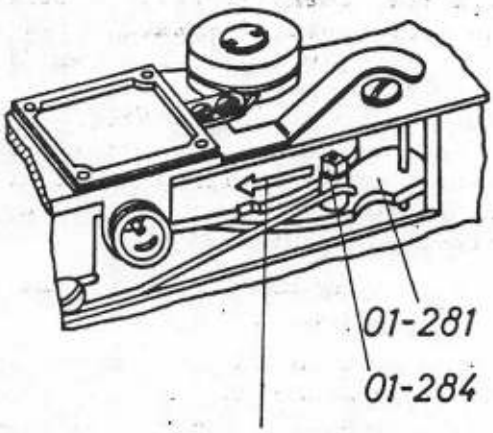

Thick side of excentric shaft in this direction

Fig. 20.1

Gradually turn the excentric shaft 01-284 on the locking pawl 01-281 (see fig. 20.1) with the spanner 42-253.01-U281 W3 until the width of the slit matches the drum image. The thicker side of the excentric shaft 01-284 must always point towards the flash sockets (see fig. 20.1). Once the shutter on a Leica sent for servicing is correctly set at 1/500 second, the 1/1000 second setting will always match the drum image for 1/1000 second as shown in fig. 19. Re-adjustment should only be necessary in exceptional cases, for which the rangefinder must be removed (see sheet 1

The shutter speed setting cam (see fig. 21.1) carries a slot cut into it. Bending the end of the cam 01-312 outwards (away from its axis) makes the slit for the 1/1000 second setting narrower; bending inwards makes the slit wider.

Speed setting cam 01-312

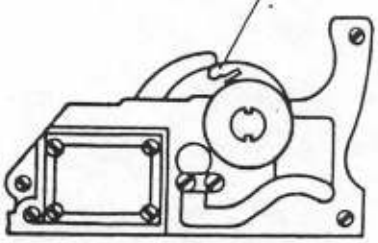

Fig. 21.1

Setting and Testing the Shutter Speeds

Continued from sheets 14 and 15

With the Speed Testing Instrument 42-253.01 Z1 W111

Set the shutter speed dial on the Leica to B, and insert the mirro 42-253.01 Z1 W41 in the film plane of the camera. Attach the Leica with its bayonet ring to the plastic Vinidur ring of the speed testing instrument.

Always set the shutter speed dial of the Leica to the speed for the key used each time on the speed testing instrument.
On pressing the Leica release button, the pointer of the meter on the speed testing instrument should come to rest within the tolerance limits marked.
The shutter speed of 1/50 second can be measured with the speed testing instrument 42-253.01 Z1 W111.
The speeds of 1/25, 1/10, 1/5, 1/2, and 1 second are checked with the speed testing instrument 42-253.01 Z1 W111.

Eccentric setting screw for 1/5 second

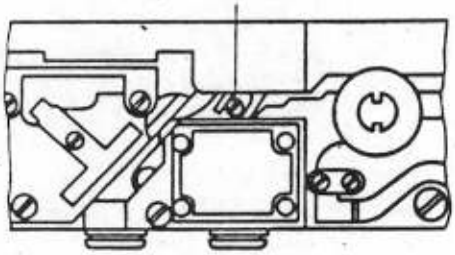

Fig. 22.1

Bending point for 1/25sec.

42-253.01-313

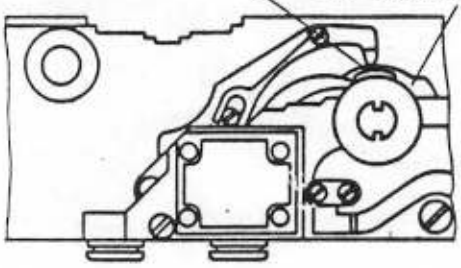

Fig. 23.1

Eccentric adjustment for shutter speed of 1/5sec.

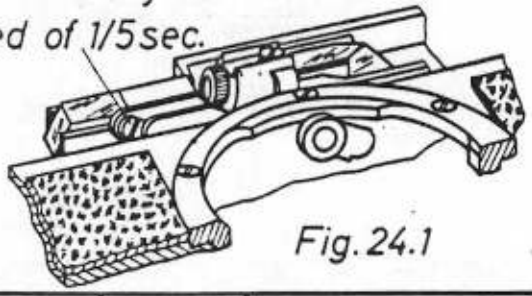

Fig. 24.1

If these shutter speeds need adjustment, remove the cover plate of the Leica (see sheets 1 and 2).

The basic setting for the slow speeds is 1/5 second. Set this speed exactly with the eccentric setting screw of the slow speed escapement 15-1 (see fig. 22.1), using the 1.8 mm dia. screw driver.
The shutter speeds of 1/10, 1/2, and second depend on the rate at which the escapement mechanism runs down. Dirt in the mechanism may slow down the speeds (see sheet 71).

For removing and refitting the escapement see sheet 17.

The shutter speed of 1/25 second can be adjusted separately on the setting cam 01-313 (see fig. 23.1) after removal of the rangefinder (see sheet 5). Bending the slit in the cam outwards or inwards (see fig. 23.1) decreases or increases respectively the exposure time.

Leica Nos. 700 001 to 703 810:
The eccentric setting screw for the basic speed setting of 1/5 second is in a different position (see fig. 24.1).

Withdraw the slow speed escapement from underneath the rangefinder, and adjust the eccentric setting screw accordingly with the 1.8 mm dia. screw driver.

After refitting the cover plate check all operations of the camera.

Setting and Testing the Shutter Speeds

Continued from sheets 14 and 15

With the Speed Testing Instrument 42-253.01 Z1 W111.

Set the shutter speed dial on the Leica to B, and insert the mirror 42-253.01 Z1 W 41 in the film plane of the camera. Attach the Leica with its bayonet ring to the plastic Vinidur ring of the speed testing instrument.

Always set the shutter speed dial of the Leica to the speed for the key used each time on the speed testing instrument.
On pressing the Leica release button, the pointer of the meter on the speed testing instrument should come to rest within the tolerance limits marked.

The shutter speed of 1/125 second, 1/60 second and ϟ can be measured with the speed testing instrument 42-253.01 Z1 W111.
The speeds of 1/30, 1/15, 1/8, 1/4, 1/2, and 1 second are checked with the speed testing instrument 42-253.01 Z1 W111.

If these shutter speeds need adjustment, remove the cover plate of the Leica (see sheets 1 and 2).

The basic setting for the slow speeds is 1/8 second. Set this speed exactly with the eccentric setting screw of the slow speed escapement 15-1 (see fig. 22.2), using the 1.8 mm dia. screw driver.

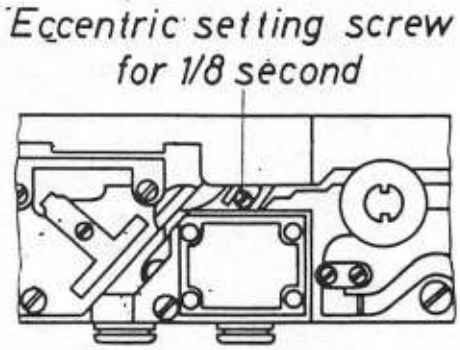

Fig. 22.2

The shutter speeds of 1/15, 1/2, and 1 second depend on the rate at which the escapement mechanism runs down. Dirt in the mechanism may slow down the speeds (see sheet 71).

For removing and refitting the escapement see sheet 17.

The shutter speed of 1/30 and 1/4 secon can be adjusted separately on the setting cam 01-305 (see fig. 23.2) after removal of the rangefinder (see sheet 5). Bending the slit in th cam outwards or inwards (see fig. 23. decreases or increases respectively the exposure time.

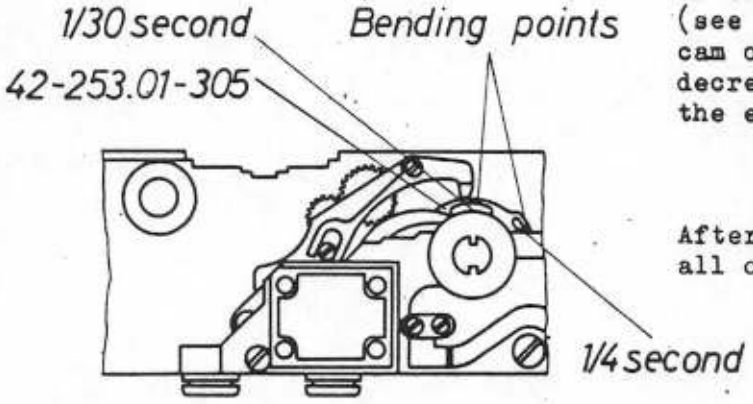

Fig. 23.2

After refitting the cover plate check all operations of the camera.

Removing and Refitting the Slow Speed Escapement

Sheet 17

Tool

1. Screw driver, 2.8 mm dia.

Sequence of Operations

Remove the cover plate (see sheets 1 and 2)

Remove the rangefinder (see sheet 5)

Unscrew the screw M 2 x 6 LN 120 21 in the contact frame 01-478 with the 2.8 mm. dia. screw driver. Move the contact frame 01-478, connected to the lead, to one side. Unscrew the shaft 01-54 (see fig. 25.1) underneath the contact frame 01-478 with the 2.8 mm. dia. screw driver. Remove the slow speed escapement and the spring 01-55 towards the front. Watch the position of the spring 01-55 while doing this.

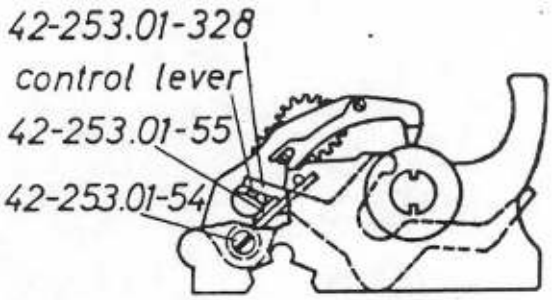

Fig. 25.1

Refit the escapement mechanism by proceeding in the reverse order. Make sure that the disengaging lever 01-328 sits in front of the control lever of the escapement mechanism. At the 1/10 second setting (on Leica models above No. 854 001 at the 1/15 second setting) the disengaging lever must put the escapement anchor out of action.

Set the shutter speeds (see sheets 14 to 16)

Adjust the rangefinder (see sheets 10 to 13)

Refit the cover plate (see sheets 1 and 2).

Fitting the Bayonet Ring

Sheet 18

Tools, Appliances, and Instruments

1. Measuring instrument for zero setting	42-253.01-Z1 A76
2. Turning attachment (Specify receiving thread of lathe)	42-253.01-535 W15
3. Auto-collimator telescope	42-582.01-Z1 W4
4. Screw driver, 2.8 mm. dia.	
5. Servicing stamp	42-253.01-Z1 W60
6. Wax 637	

Sequence of Operations

Place the back of the Leica on the zero setting instrument 42-253.01-Z1 A76. Insert the bayonet ring 01-535 in the Leica housing, and with a dial gauge measure the distance from the front of the bayonet ring to the measuring plate. Fix the bayonet ring to the turning attachment 42-253.01-535 W15 on a lathe, and turn down the bayonet ring by the amount found necessary on measurement. The correct setting, once the bayonet ring is screwed down, must be $27.95^{+0.005}_{-0.01}$ (see fig. 26.1). Mount the bayonet ring on the housing with the four screws 15-10.170-9 and the screw 15-10.170-10, using the 2.8 mm. dia. screw driver (see also sheets 3 and 4, fig. 3.1).

Use the auto-collimator telescope 42-582.01-Z1 W4 to check the parallel alignment of the bayonet ring to the plane of the film track on the zero setting instrument. Deviations up to half the thickness of the line are permissible.

After fitting the bayonet ring, re-check the rangefinder (see sheets 10 to 13).

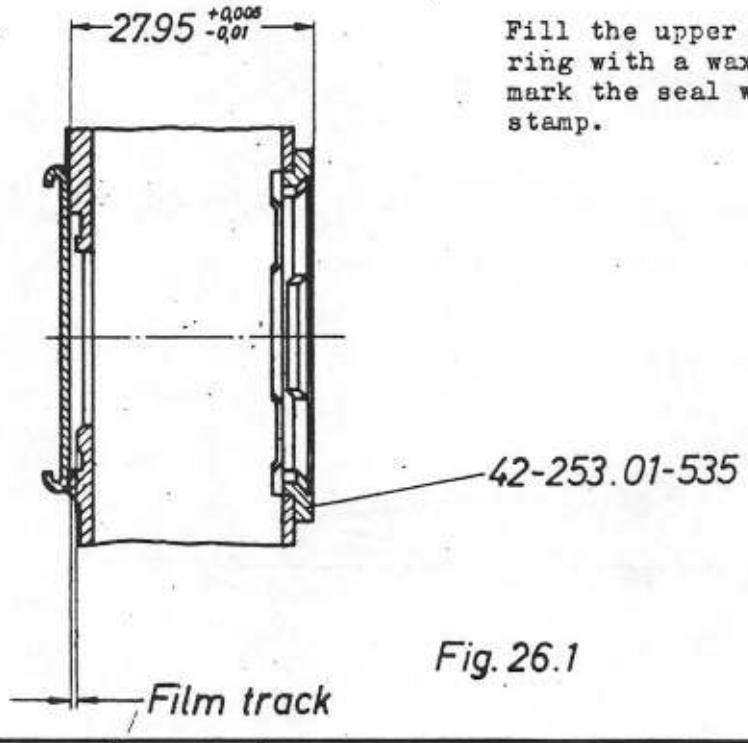

Fig. 26.1

Fill the upper mounting hole of the bayonet ring with a wax seal (see fig. 1.1), and mark the seal with the Leica servicing stamp.

Daniel D. Teoli Jr. Archival Collection

Removing and Refitting the Pressure Plate

Sheet 19

Tool

Screw driver, 2.5 mm dia.

Sequence of Operations

Remove the camera back 01-567 from the Leica body. With the 2.5 mm dia. screw driver unscrew the two screws M 1.4 x 1.2 LN 120 21 on each of the brackets 01-578. Remove the two brackets 01-578 (see fig. 27.1). Slide the pressure plate 01-573 lengthways and raise up at one end until the spring 01-574 at the raised end is clear of the retaining ledge of the pressure plate (see fig. 28.1). Lift off the pressure plate 01-573.

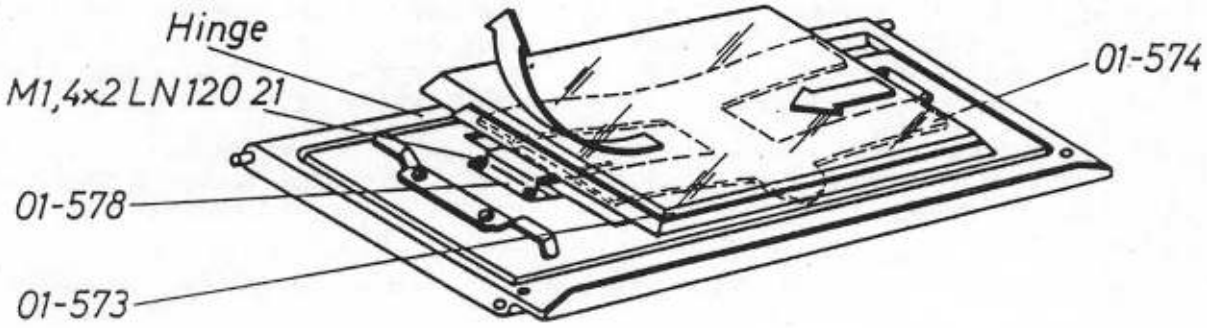

Fig. 27.1

Refit the camera back by proceeding in the reverse order. Note especially the orientation of the pressure plate 01-573 (see sheet 9.1 of the Spare Parts List for the Leica M 3).

When refitted, the pressure plate must be well sprung against the camera back.

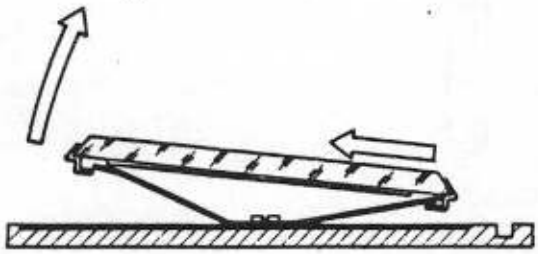

Fig. 28.1

Removing and Refitting the Pressure Plate

Sheet 19

Tool

Screw driver, 2.5 mm. dia.

Sequence of Operations

Remove the camera back 01-646 from the Leica body. With the 2.5 mm. dia. screw driver unscrew the two screws M 1.4 x 2 LN 120 21 on each of the two retaining strips 01-650. Remove the retaining strips 01-650 (see fig. 27.2). Slide the pressure plate 01-648 lengthways and raise up at one end until the spring 01-649 is free of the retaining ledge of the pressure plate (see fig. 28.2). Lift off the pressure plate 01-648.

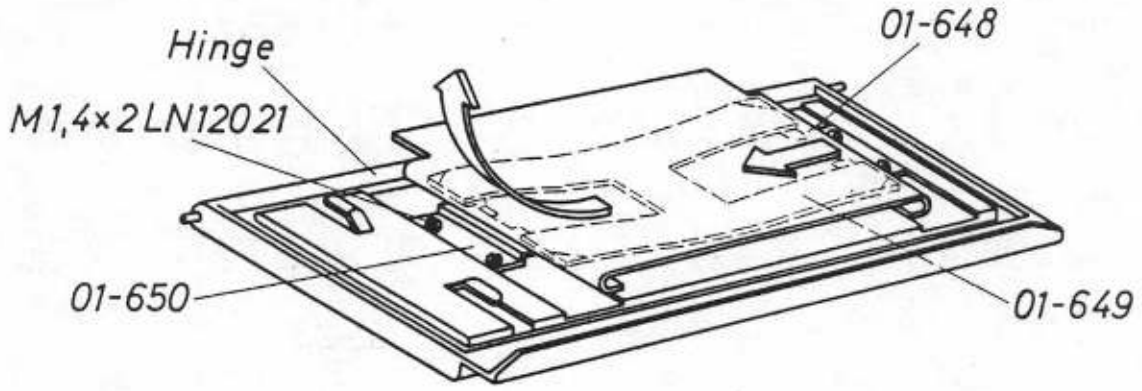

Fig. 27.2

Refit the camera back by proceeding in the reverse order. Note especially the orientation of the pressure plate 01-648 (see Spare Parts List for the Leica M 3, sheet 9.2).

When refitted, the pressure plate must be well sprung against the camera back.

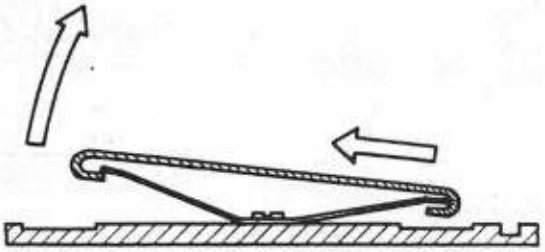

Fig. 28.2

Setting the Film Transport Shaft

Sheets 20 and 21

Tools

1. Spanner 42-253.01-31 W3
2. Gauge 42-253.01-Z1 A40
3. Screw driver, 2.5 mm dia.
4. Screw driver, 2.8 mm dia.

Sequence of Operations

Remove the cover plate (see sheets 1 and 2)
Remove the housing (see sheets 3 and 4).

Fit the winding lever 01-34 (winding lever 01-371 on Leica from No. 919 251 onwards), the spring 15-12.11-6, and the screw ring 01-36.

Tension the Leica shutter.
Insert the gauge 42-253.01-Z1 A40 into the picture aperture so that a tooth of the transport sprocket 01-16 is in the aperture of the gauge.

Pull the winding lever 01-34 as for advancing the film, and at the same time press the film transport shaft 01-16 against the transport direction.
The indicator of the gauge must point exactly to the centre of the scale (see fig. 29.1).

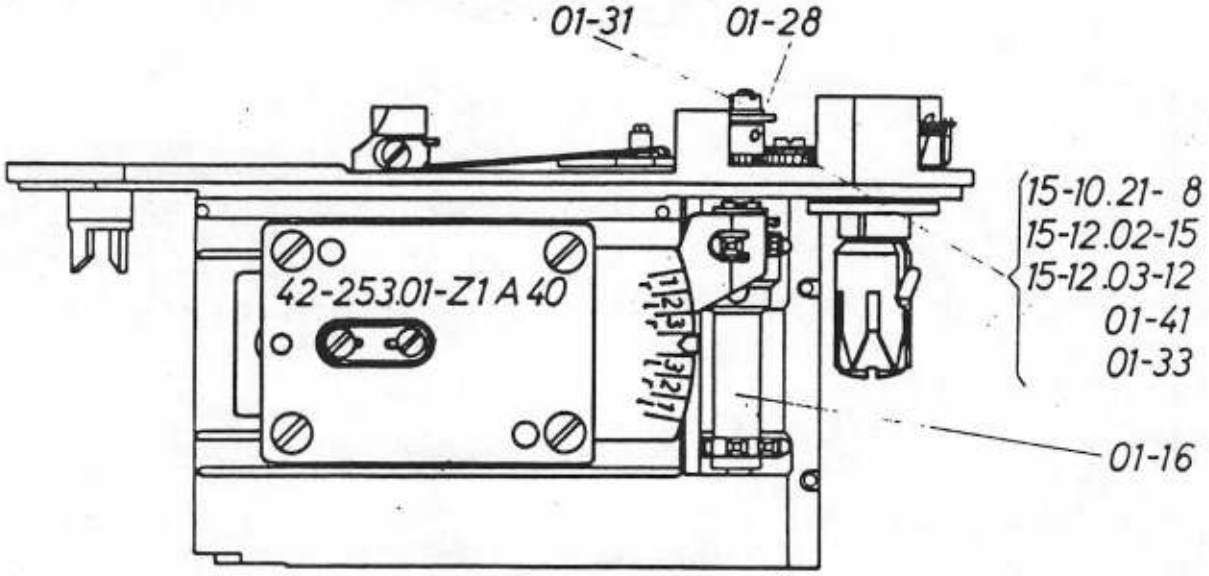

Fig. 29.1

If the gauge does not give the correct reading, proceed as follows. Unscrew the two screws 15-10.20-10 with the 2.8 mm dia. screw driver, and remove the delayed action mechanism 16-1. Unscrew the two screws M 1.4 x 2.2 DIN 63 with the 2.5 mm dia. screw driver, and remove the coupling shaft 01-368 and the coupling wheel 01-355 (see sheet 15.1 of the Spare Parts List for the Leica M 3).

Setting the Film Transport Shaft

Sheets 20 and 21

Tools

1. Spanner 42-253.01-31 W 3
2. Gauge 42-253.01-Z1 A89
3. Screw driver, 2.5 mm dia.
4. Screw driver, 2.8 mm dia.

Sequence of Operations

Remove the cover plate (see sheets 1 and 2).
Remove the housing (see sheets 3 and 4).

Fit the winding lever 01-371, the spring 15-12.11-6/1, and the screw ring 01-36.

Tension the Leica shutter.
Insert the gauge 42-253.01-Z1 A89 into the picture aperture so that a tooth of the transport sprocket 01-16 is in the aperture of the gauge.

Pull the winding lever 01-371 as for advancing the film, and at the same time press the film transport shaft 01-16 against the transport direction.

The indicator of the gauge must point exactly to the centre of the scale (see fig. 29.2).

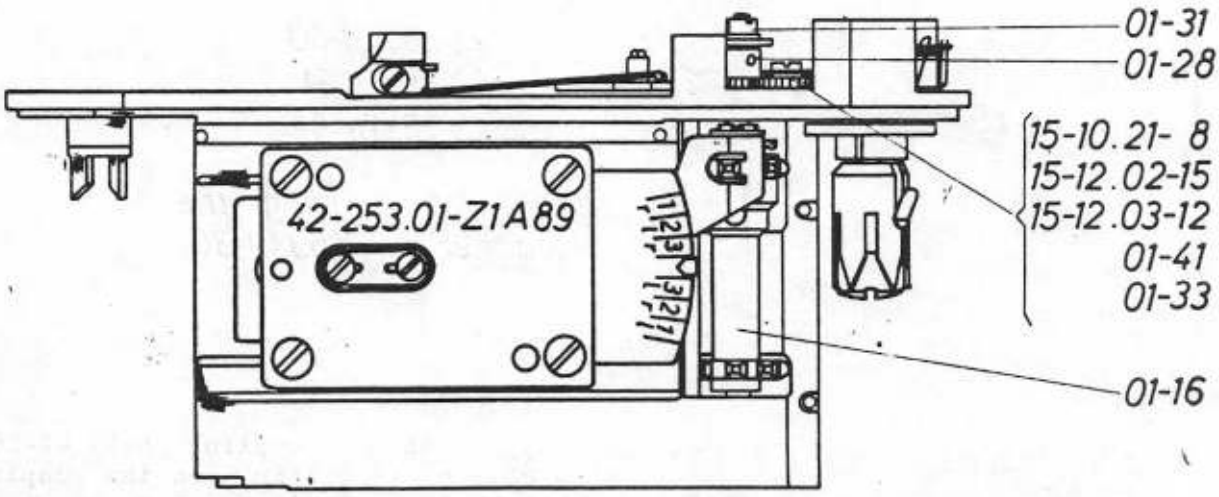

Fig. 29.2

If the gauge does not give the correct reading, proceed as follows. Unscrew the two screws 15-10.20-10 with the 2.8 mm dia. screw driver, and remove the delayed action mechanism 16-1. Unscrew the two screws M 1.4 x 2.2 DIN 63 with the 2.5 mm dia. screw driver, and remove the coupling shaft 01-368 and the coupling wheel 01-355 (see sheet 15.2 of the Spare Parts List for the Leica M 3).

Setting the Film Transport Shaft

Continued from sheet 20

Unscrew the nut 42-253.01-31 with the spanner 42-253.01-31 W3.

In the case of an incorrect reading (for instance if the pointer of the gauge indicates 2 1 on the scale) the cog wheel 42-253.01-33 must be lifted out of engagement with the pinion 42-253.01-28, and the film transport shaft 42-253.01-16 then turned to the left through the distance of two sprocket teeth. Replace the gauge 42-253.01-Z1 A89 in the film aperture (see fig. 23.1), and engage the cog wheel 42-253.01-33 with the pinion 42-253.01-28 in such a way that the gauge gives the correct reading.

The arresting lever 42-253.01-129 must engage in one of the three notches of the cog wheel on the driving shaft 01-140, while the limiting positions of the lever 42-253.01-825 and of the arresting lever 42-253.01-129 are fixed with the positioning washers 42-253.01-30 and 42-253.01-824 (see fig. 24.1). The illustration shows the position with the winding lever 42-253.01-371 pulled in the transport direction. Tighten the nut 42-253.01-31 with the spanner 42-253.01-31 W3, and seal with lacquer when all adjustments are completed.

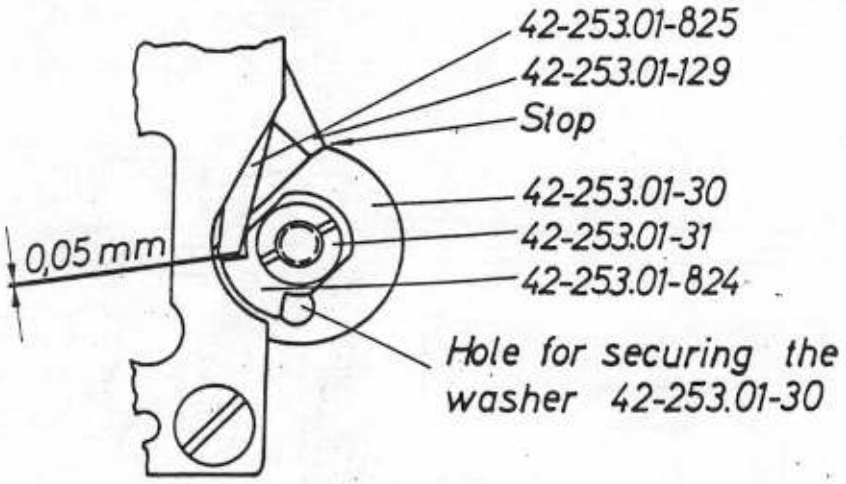

Fig. 24.1

Insert the coupling wheel 42-253.01-355 with the coupling shaft 42-253.01-368 in such a way that the shutter runs down on releasing when the coupling wheel 42-253.01-355 is pressed to the left or right. Screw in the two screws M 1.4 x 2.2 DIN 63 with the 2.5 mm. dia. screw driver.

Refit the housing (see sheets 3 and 4)

Refit the cover plate (see sheets 1 and 2)

Check the camera operation.

Setting the Film Transport Shaft

Continued from sheet 20

Unscrew the nut 01-31 with the spanner 42-253.01-31 W3. Unscrew the screw 15-10.21-8 with the 2.8 mm dia. screw driver, and lift off the locking pawl 01-684, the spring 15-12.03-12/1, and the washer 15-12.02-15/1.

In the case of an incorrect reading - for instance if the pointer of the gauge indicates 2 1 on the scale - lift the cog wheel 01-33 out of engagement with the pinion 01-28, and then turn the film transport shaft 01-16 to the left through the distance of two sprocket teeth. Replace the gauge 42-253.01-Z1-A89 in the picture aperture, and engage the cog wheel 01-33 with the pinion 01-28 in such a position that the gauge gives the correct reading.

Replace the locking pawl 01-684, the spring 15-12.03-12/1, and the washer 15-12.02-15/1, and screw down the screw 15-12.21-8/1 with the 2.8 mm dia. screw driver.

The arresting lever 01-129 must engage one of the three notches of the cog wheel on the driving shaft 01-135, while the limiting positions of the lever 01-825 and of the arresting lever 01-129 are fixed with the positioning washers 01-30 and 01-824 (see fig. 30.2). The illustration shows the position with the winding lever 01-371 pulled in the transport direction. Tighten the nut 01-31 with the spanner 42-253.01-31 W3, and seal with protective lacquer when all adjustments are completed.

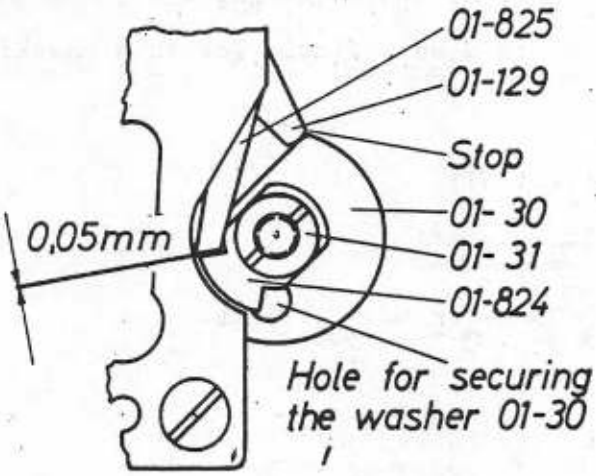

Fig. 30.2

Insert the coupling wheel 01-355 with the coupling shaft 01-368 in such a way that the shutter runs down on releasing when the coupling wheel 01-355 is pressed to the left or to the right. Screw in the two screws M 1.4 x 2.2 DIN 63 with the 2.5 mm dia. screw driver.

Refit the self-timer mechanism 16-1, and fix the two screws 15-10.20-10 with the 2.5 mm dia. screw driver.

Refit the housing (see sheets 3 and 4).

Refit the cover plate (see sheets 1 and 2).

Set the self-timer mechanism (see sheets 8 and 9).

Check the operations of the camera.

Checking the Synchronization

Sheets 22 to 25

Testing Instruments, Accessories, and Tools

1. Contact test meter	42 531 -Z1 W13
2. Synchro test unit	42-253.01-Z1 W98
3. Template	42-253.01-Z1 W51 U50.01
4. Template	42-253.01-Z1 W51 U60
5. Bending tool	42-253.01-U443 W5
6. Bending tool	42-253.01-U443 W6
7. Spanner	42-253.01-76 W2
8. Cable with probing points	103.25.18
9. MOONZ lead	42-253.04
10. Screw driver, 2.5 mm dia.	

Notes

This checking procedure assumes that the shutter speeds have been tested in accordance with the Servicing Instructions for the Leica M 3 (sheets 14 to 16).

Before releasing the shutter of the Leica, make sure that the indicator lamp of the synchro test unit 42-253.01-Z1 W98 lights up to show that the instrument is ready for use.

Always operate the discharge key on the contact test meter 42 531-Z1 W13 after moving the lever between the positions "D", "J", and "L".

The synchro test unit 42-253.01-Z1 W66 is also suitable for this checking procedure.

Sequence of Operations

1. With the contact test meter 42 531-Z1 W13

Checking the M-contact (outlet socket).

1.1 Measuring the insulation resistance:

1.11 Set the switch on the contact test meter to 500 volts.
Fit the plug in the M-socket (outlet).
Set the lever to "J".
Do not tension the Leica shutter.

1.12 Press down the release button on the Leica, and turn the shutter speed dial from 1/1000 second to B:
The pointer must not register nor the indicator lamp light up.

1.13 Possible causes of failure on testing the insulation resistance:
Short circuit due to faulty insulation.
The contact spring 01-466 touches the housing 01-330.
The setting lever 01-289 touches the soldering point of the M-socket (outlet) when the shutter speed dial is set to B.

Other causes failure not mentioned above must be traced by checking the leads and contacts with the probing points 103.25.18.

1.2 Measuring the line resistance:

1.21 Set the lever to "D".
Tension the Leica shutter.
Set the shutter speed dial to B.

1.22 Hold the first shutter blind, and press the release button. Let the shutter blind run down slowly; after it has travelled 5 mm. the pointer of the contact test meter must give a scale reading between 60 and 100.

Checking the Synchronization

Sheets 22 to 25

Testing Instruments, Accessories, and Tools

1. Contact test meter	42 531 -Z1 W13
2. Synchro test unit	42-253.01-Z1 W98
3. Template	42-253.01-Z1 A96
4. Template	42-253.01-Z1 A97
5. Bending tool	42-253.01-U443 W5
6. Bending tool	42-253.01-U443 W6
7. Spanner	42-253.01-76 W2
8. Cable with probing points	103.25.18
9. MOONZ lead	42-253.04
10. Screw driver, 2.5 mm dia.	

Notes

This checking procedure assumes that the shutter speeds have been tested in accordance with the Servicing Instructions for the Leica M 3 (sheets 14 to 16).

Before releasing the shutter of the Leica, make sure that the indicator lamp of the synchro test unit 42-253.01-Z1 W98 lights up to show that the instrument is ready for use.

Always operate the discharge key on the contact test meter 42 531-Z1 W13 after moving the lever between the positions "D", "J", and "L".

The synchro test unit 42-253.01-Z1 W66 is also suitable for this checking procedure.

Sequence of Operations

1. With the contact test meter 42 531-Z1 W13

Checking the M-contact (outlet socket 🔍).

1.1 Measuring the insulation resistance:

1.11 Set the switch on the contact test meter to 500 volts.
Fit the plug in the M-socket (outlet 🔍).
Set the lever to "J".
Do not tension the Leica shutter.

1.12 Press down the release button on the Leica, and turn the shutter speed dial from 1/1000 second to B:
The pointer must not register nor the indicator lamp light up.

1.13 Possible causes of failure on testing the insulation resistance:
Short circuit due to faulty insulation.
The contact spring 01-466 touches the housing 01-330.
The setting lever 01-289 touches the soldering point of the M-socket (outlet 🔍) when the shutter speed dial is set to B.

Other causes failure not mentioned above must be traced by checking the leads and contacts with the probing points 103.25.18.

1.2 Measuring the line resistance:

1.21 Set the lever to "D".
Tension the Leica shutter.
Set the shutter speed dial to B.

1.22 Hold the first shutter blind, and press the release button. Let the shutter blind run down slowly, after it has travelled 5 mm. the pointer of the contact test meter must give a scale reading between 60 and 100.

Checking the Synchronization

Continued from sheet 22

1.23 Possible causes of failure on measuring the line resistance:
Dirty outlet socket.
Poor connection between socket and plug.
Poor or broken soldering connection.
Contact springs fused together.

Other causes of failure not mentioned above must be traced by checking the leads and contacts with the probing points 103.25.18.

1.3 Checking the closing of the contact at all speeds from B to 1/1000 second:

1.31 Set the lever to "L".
Set the shutter speed dial to B.
Tension the Leica shutter.

1.32 Press the release button;
The green indicator lamp must light up to show that the contacts close.
Repeat the check for all settings from B to 1/1000 second, and from 1/1000 second to B.

1.33 For possible causes of failure on checking the closing of the contacts see 1.23.

Checking the X-contact (outlet socket ⚡).

1.4 Measuring the insulation resistance:

1.41 Set the switch on the contact test meter to 1000 volts.
Set the lever to "J", and the shutter speed dial to B.
Tension the Leica shutter.
Hold the first shutter blind.

1.42 Press the shutter release button;
The pointer must not register, nor the indicator lamp light up.
Let the shutter run down.

1.43 Press the release button, and pull the winding lever as far as it will go. Let go of the release button. The shutter blinds must still be in their starting position when the winding lever is moved to a point where the release button cannot be depressed.

1.44 Press the shutter release button:
The indicator lamp must not light up.

1.45 For possible causes of failure see 1.13.

1.5 Measuring the line resistance:

1.51 Set the lever to "D".
Tension the Leica shutter.
Set the shutter speed dial to B.

1.52 Press the shutter release button:
The pointer must give a scale reading between 60 and 100.

1.53 For possible causes of failure see 1.23.

Checking the Synchronization

Continued from sheets 22 and 23

2. With the synchro test unit 42-253.01-Z1 W98:

Remove the back of the Leica for testing.

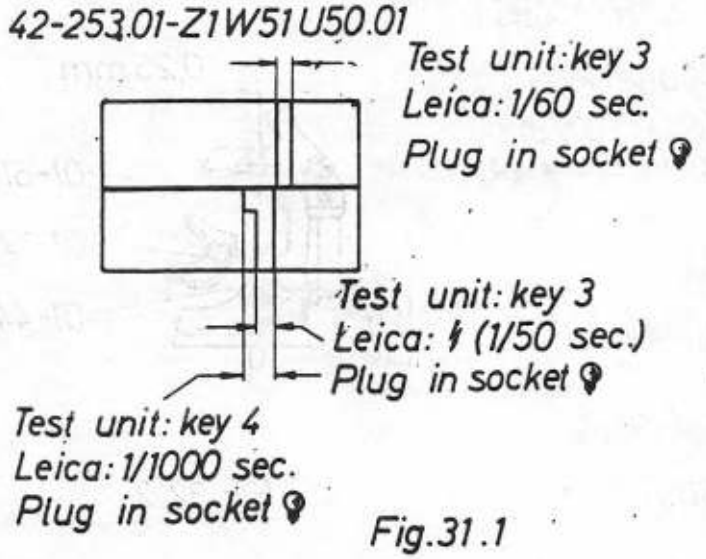

Fig.31.1

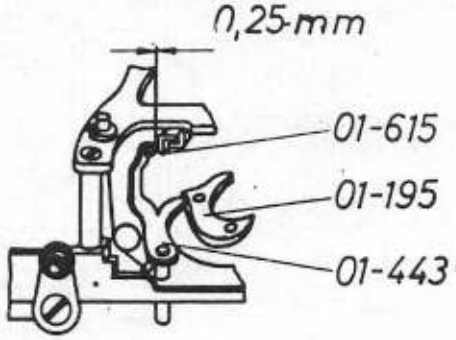

Fig. 32.1

Checking the M-contact (outlet socket)

2.1 Checking the correct contact position for flash bulbs:

2.11 Fit the plug into the M-socket (outlet).
Press the key 4.
Insert the template 42-253.01-Z1 W51 U50.01 in the film aperture of the camera.
Set the shutter speed dial to 1/1000 second.
Tension the Leica shutter.
Mount the Leica with the front aperture on the synchro test unit.

2.12 Press the shutter release button:
The reading must be within the limits indicated on the template 42-253.01-Z1 W51 U50.01 (see fig. 31.1).

2.13 Repeat step 2.12 with the key 3 depressed and the shutter speed dial set to 1/50 second (set to 1/60 on Leica models from No. 854 001 onwards).

2.14 In the case of a faulty reading at the 1/1000 second setting of the shutter speed dial check wether the separation between the contacts of the flash setting lever 01-615 and the flash contact bar 01-443 is 0.25 mm. (see fig. 32.1). If necessary bend the contact on the flash contact bar 01-443 into the required position with the bending tool 42-253.01-U443 W5.

2.15 In the case of an incorrect reading at the 1/50 second setting (set to 1/60 on Leica models from No. 854 001 onwards) of the shutter speed dial remove the cover plate (see sheets 1 and 2) and the rangefinder (see sheet 5). Bend the arm of the flash contact bar 01-443 bearing against the cam 01-195, using the bending tool 42-253.01-U443 W6 (see fig. 32.1). If the contact is made too late, bend this arm to the left; if the contact is too early, bend to the right.
Check that the separation between the contacts of the flash setting lever 01-615 and the flash contact bar 01-443 is at least 0.25 mm. when the shutter speed dial is set to 1/1000 second.

Checking the Synchronization

Continued from sheets 22 and 23

2. With the synchro test unit 42-253.01-Z1 W98:

Remove the back of the Leica for testing.

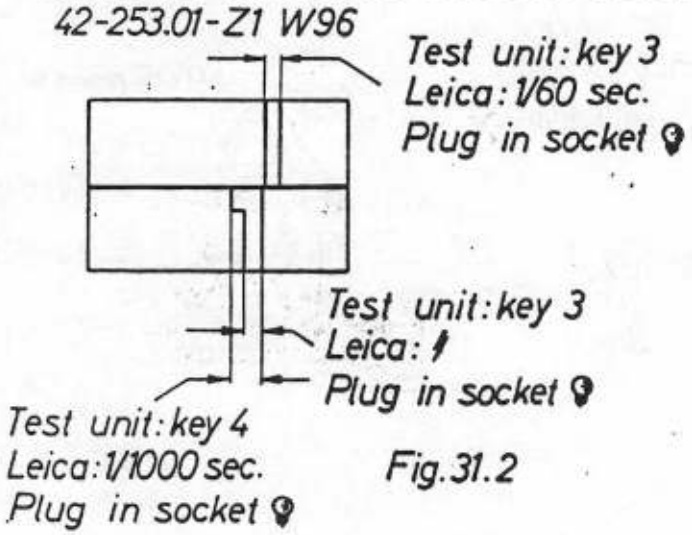

Fig. 31.2

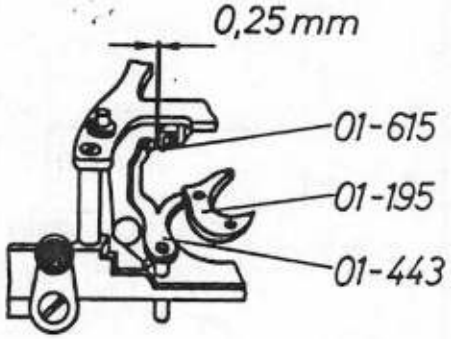

Fig. 32.2

Checking the M-contact (outlet socket)

2.1 Checking the correct contact position for flash bulbs:

2.11 Fit the plug into the M-socket (outlet).
Press the key 4.
Insert the template 42-253.01-Z1 W96 in the film aperture of the camera.
Set the shutter speed dial to 1/1000 second.
Tension the Leica shutter.
Mount the Leica with the front aperture on the synchro test unit.

2.12 Press the shutter release button:
The reading must be within the limits indicated on the template 42-253.01-Z1 W96 (see fig. 31.2).

2.13 Repeat step 2.12 with the key 3 depressed and the shutter speed dial set to 1/60 second.

2.14 In the case of a faulty reading at the 1/1000 second setting of the shutter speed dial check wether the separation between the contacts of the flash setting lever 01-615 and the flash contact bar 01-443 is 0.25 mm. (see fig. 32.2). If necessary bend the contact on the flash contact bar 01-443 into the required position with the bending tool 42-253.01-U443 W5.

2.15 In the case of an incorrect reading at the 1/60 second setting of the shutter speed dial remove the cover plate (see sheets 1 and 2) and the rangefinder (see sheet 5). Bend the arm of the flash contact bar 01-443 bearing against the cam 01-195, using the bending tool 42-253.01-U443 W6 (see fig. 32.2). If the contact is made too late, bend this arm to the left; if the contact is too early, bend this arm to the left; if the contact is too early, bend to the right.
Check that the separation between the contacts of the flash setting lever 01-615 and the flash contact bar 01-443 is at least 0.25 mm. when the shutter speed dial is set to 1/1000 second.

Checking the Synchronization

Continued from sheets 22, 23, and 24

Checking the X-contact (outlet socket ϟ)

2.2 Checking the correct position for electronic flash:

2.21 Fit the plug into the X-socket (outlet ϟ).
Insert the template 42-253.01-Z1 W51 U60 in the picture aperture of the camera.

42-253.01-Z1 W51 U60

Test unit: key 6
Leica: ϟ
Plug in socket

Fig. 33.1

Set the shutter speed dial of the Leica to 1/50 second (on Leica models from No. 854 001 onwards to ϟ).
Depress key 6 on the synchro test unit.
Tension the Leica shutter.
Mount the Leica with the front aperture on the synchro test unit.

2.22 Press the shutter release button:
The two slots of the template must be illuminated at each side (see fig. 33.1). On Leica models below No. 782 000 (with Novotext brake) 1 mm of the left-hand slot must still be obscured by the first shutter blind; on Leica models above No. 782 000 (with aluminium brake) only 0.5 mm. The second shutter blind must not yet appear in the picture aperture of the camera.

2.23 If the end position of the first shutter blind is incorrect, unscrew the two screws M 1.7 x 3.5 LN 120 25 and the screw 15-10.174-7 (see fig. 34.1) with the 2.5 mm dia. screw driver. Remove the cover plate 01-90 and the locking plate 01-78. Use the spanner 42-253.01-76 W2 to turn the nut 15-11.175-5 to the left or right until the end position of the first shutter blind corresponds to that specified in step 2.22. If the right-hand slot of the template indicates that the second shutter blind already appears in the picture area of the camera, re-check first of all the shutter speed at the 1/50 second setting (on cameras above No. 854 000 at the ϟ setting). See sheets 14 to 16 of the Servicing Instructions.

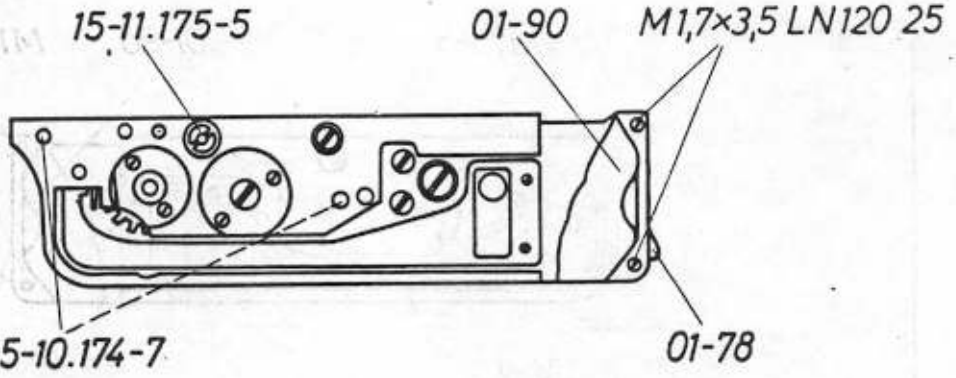

Fig. 34.1

Checking the Synchronization

Continued from sheets 22, 23, and 24

Checking the X-contact (outlet socket ϟ)

2.2 Checking the correct position for electronic flash:

2.21 Fit the plug into the X-socket (outlet ϟ).
Insert the template 42-253.01-Z1 W97 in the picture aperture of the camera.

42-253.01-Z1 W97

Test unit: key 6
Leica: ϟ
Plug in socket ϟ

Fig. 33.2

Set the shutter speed dial of the Leica to ϟ.
Depress key 6 on the synchro test unit.
Tension the Leica shutter.
Mount the Leica with the front aperture on the synchro test unit.

2.22 Press the shutter release button:
The two slots of the template must be illuminated at each side. 0,5 mm of the left-hand slot must still be obscured by the first blind (see fig. 33.2). The second shutter blind must not yet appear in the picture aperture of the camera.

2.23 If the end position of the first shutter blind is incorrect, unscrew the two screws M 1.7 x 3.5 LN 120 25 and the screw 15-10.174-7 (see fig. 34.2) with the 2.5 mm dia. screw driver. Remove the cover plate 01-90 and the locking plate 01-78. Use the spanner 42-253.01-76 W2 to turn the nut 15-11.175-5 to the left or right until the end position of the first shutter blind corresponds to that specified in step 2.22. If the right-hand slot of the template indicates that the second shutter blind already appears in the picture area of the camera, re-check first of all the shutter speed at the ϟ setting. See sheets 14 to 16 of the Servicing Instructions.

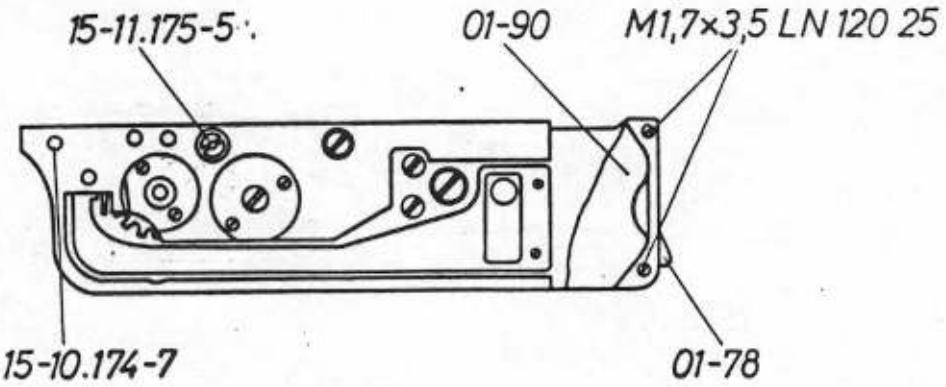

Fig. 34.2

Repairs to the Winding and Release Mechanism

Sheet 50

State of the Camera

The Leica cannot be wound, nor the shutter released. The shutter blinds are closed, but their edges are visible in the picture aperture (see fig. 70.1).

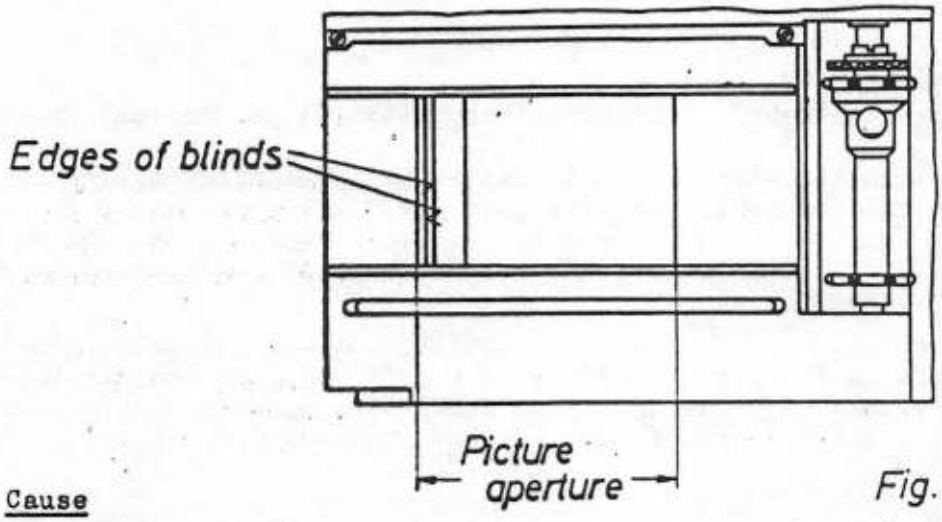

Fig. 70.1

Cause

A violent knock (due to banging or dropping the Leica) from the direction of the cover plate has flung the lever 01-445 off its contact cam 01-195 and jammed it against the release cam 01-194 (see fig. 71.1).

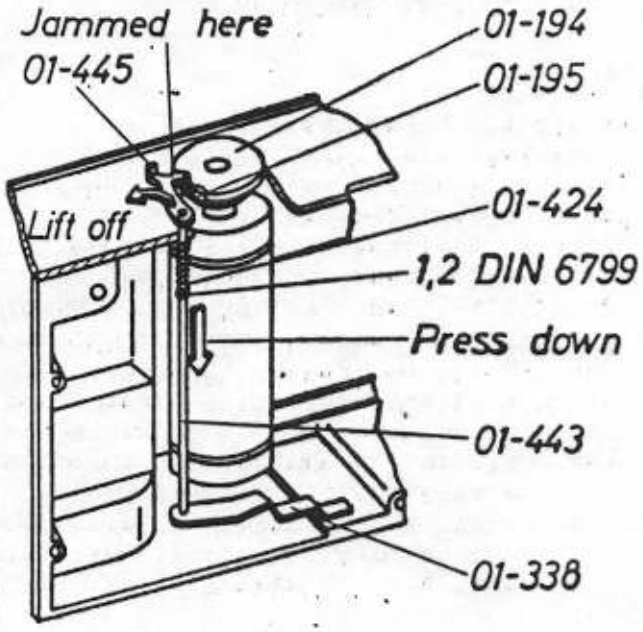

Fig. 71.1

Repair

Remove the cover plate and the housing (see sheets 1 to 4), grip the lever 01-445 with a pair of tweezers, lift it off the release cam 01-194, and push downwards. Check that the shaft bearing of the flash shaft 01-443 is properly in place in the hole of the brake support 01-338. The Leica can now be wound and released.

Pull off the locking washer 1.2 DIN 6799 from the flash shaft 01-443, and stretch the spring 01-424 to about 10-11 mm with two pairs of tweezers. Press the locking washer 1.2 DIN 6799 in place in the notch of the shaft.

Check the operation of the lever 01-445.

Re-check: Rangefinder (see sheets 10 to 13)
Bayonet ring (see sheet 18).

Repairs to the Winding and Release Mechanism

Sheet 51

Tool

Spanner 42-253.01-597 W2

State of the Camera (a) and (b)

(a) The Leica cannot be wound, nor the shutter released; the release button is depressed.
On tensioning the self-timer in this state, the tensioning lever does not engage in the tensioned position (see fig. 72.1), and has to be held in place. With the self-timer lever held in position, wind the Leica and turn it upside down. Let the self-timer run down with the camera inverted; this leads to state (b).

(b) On winding the Leica upside down, the shutter runs down without pressing the release button. This can be repeated indefinitely as long as the camera is inverted. On pressing the release button gently during winding, the button engages, bringing the camera back to state (a) above.

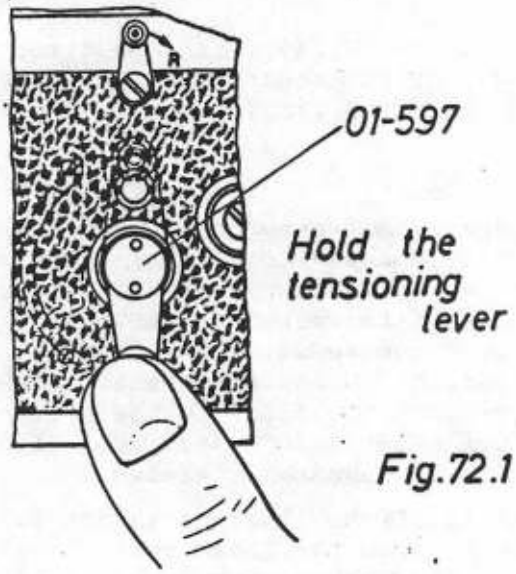

Fig.72.1

Cause

The tensioning lever of the self-timer is out of position.

Spanner 42-253.01-597 W2

Repair

Bring the Leica to state (a) as described above. The self-timer tensioning lever is in the "run down" position (see fig. 72.1).
Unscrew the screw 01-597 (this has a left-hand thread) with the spanner 42-253.01-597 W2 (see fig. 72.1) until the self-timer mechanism starts to run down. Place the finger lightly on the release button; when this button jumps up, tighten the screw 01-597 with the spanner. Wind the Leica, set the shutter speed dial to B, tension the self-timer, and release it. On releasing the Leica the first shutter blind must run down, and the second blind close the picture aperture shortly before the self-timer is fully run down. When this setting of the self-timer mechanism is correct, the self-timer lever also engages again in the tensioned position.

For setting the self-timer see also sheets 8 and 9.

Repairs to the Winding and Release Mechanism

Sheets 52 and 53

Tools and Spare Parts

1. Soldering iron
2. Screw driver, 2.8 mm dia.
3. Guide bracket 42-253.01-95

State of the Camera

The Leica is wound, but the release button is blocked. Nor do the shutter blinds run down on operating the self-timer.

Cause

On running down, the edge of the first shutter blind 01-273 has finished up alongside the light trap fitted to the second shutter blind 01-265 (see fig. 74.1) instead of running into the trap (see fig. 73.1). On winding the camera the winding mechanism jams prematurely before unblocking the release button.

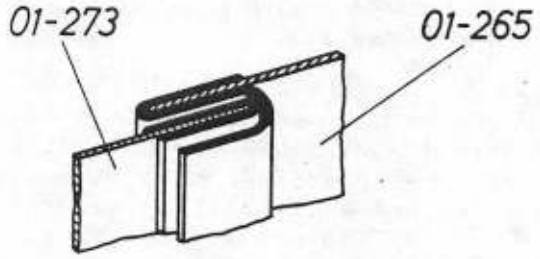

Fig. 73.1

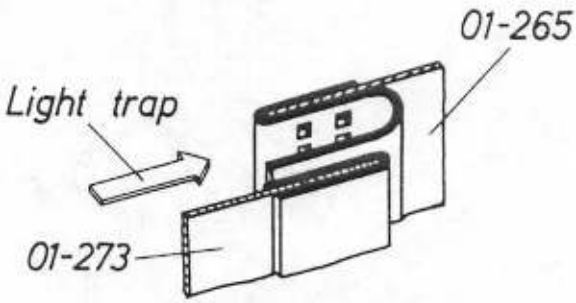

Fig. 74.1

Repair

Wind the Leica by a firm jerk on the winding lever 01-34 (see fig. 1.1). The release button can now be depressed. With some Leicas the release has to be depressed and the shutter released by careful tugging at the shutter blind. Wind the Leica again, set the shutter speed dial to B, and press the release button to let the first shutter blind run down. Look into the camera from the front, and check that the adge of the first shutter blind has not gone more than 1 to 2 mm past the adge of the picture aperture (see fig. 75.1).

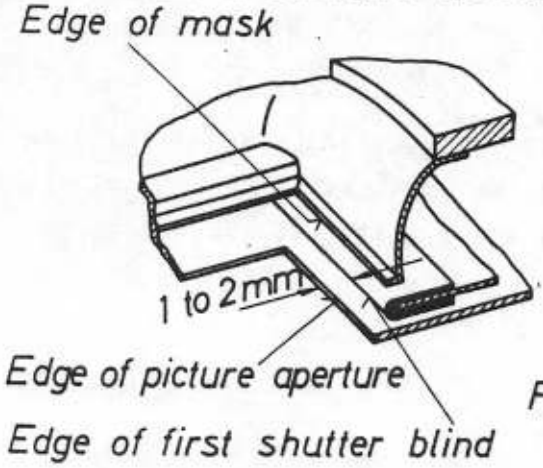

Fig. 75.1

If the edge of the shutter blind has gone too far, re-set the brake of the first shutter blind (see sheets 6 and 7). If necessary bend the light trap at the edge of the second shutter blind (see fig. 74.1) to shape.

The above trouble is most likely to arise at the 1/250 second setting, and the camera should be checked at this speed.

Repairs to the Winding and Release Mechanism

Continued from sheet 52

To eliminate this defect altogether, a modified guide bracket 01-95 should be fitted to the Leica being serviced.

Sequence of Operations

Remove the cover plate (see sheets 1 and 2).

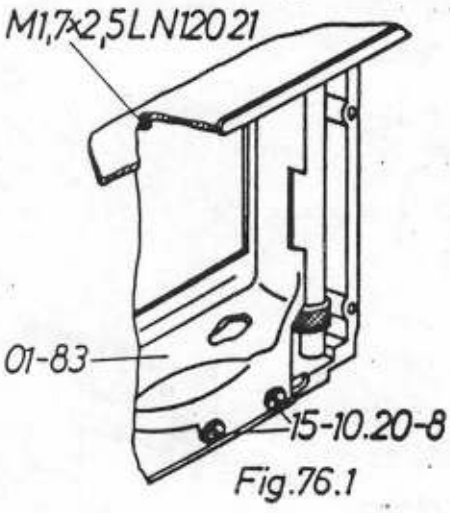

Fig.76.1

Remove the housing (see sheets 3 and 4).

Remove the rangefinder (see sheet 5).

Unscrew the two screws 15-10.20-8 and the screw M 1.7 x 2.5 LN 120 21 (see fig. 76.1) with the 2.8 mm dia. screw driver. Lift the mask 01-83 out of the camera body.

Unsolder the earth connection on the guide bracket 01-95 (see fig. 77.1), unscrew the hexagonal nut M 2 x 1.6 DIN 934, and remove the guide bracket 01-95.

Fit the modified guide bracket 01-95 in place of the one taken out, and screw down with the hexagonal nut M 2 x 1.6 DIN 934 (see fig. 78.1). Insert the guide bracket so that it guides the edge of the second shutter blind smoothly as the latter runs down. The guide bracket must on no account pinch the edge of the blind.

Re-solder the earth connection to the guide bracket.

Check the clearance between the edge of the first shutter blind and the picture aperture (see fig. 75.1) and adjust if necessary (see sheets 6 and 7). Insert the mask 01-83, and screw down with the two screws 15-10.20-8.

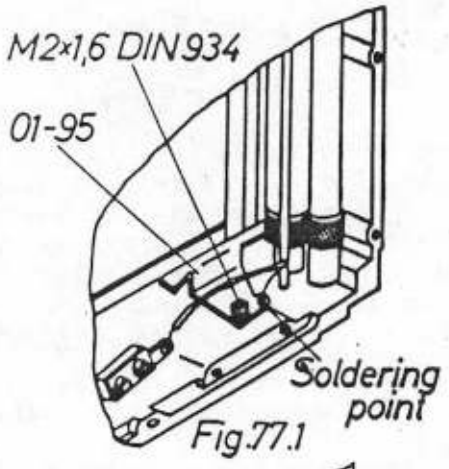

Fig.77.1

Refit the rangefinder (see sheet 5).

Refit the housing (see sheets 3 and 4).

Check the spacing between the bayonet ring and the film track (see sheet 18).

Adjust the rangefinder (see sheets 10 to 13).

Set the self-timer (see sheets 8 and 9).

Refit the cover plate (see sheets 1 and 2).

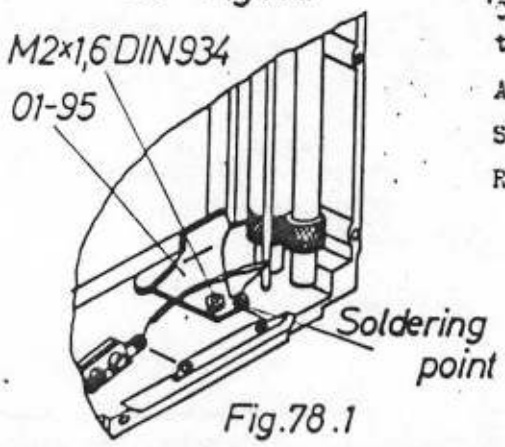

Fig.78.1

Eliminating Light Leakage Caused by the Chico Flash Gun

Sheet 54

Tools

1. Metal hook (see Fig. 79.1)
2. Screw driver, 2.3 mm dia.
3. Teroson fluid

With a large flash bulb used in the Chico flash gun and protruding beyond the edge of the reflector, some light can occasionally be reflected onto the film plane. The light from the flash bulb passes through the ground glass screen of the window in the cover plate, reaches the edge of the lens barrel between the bayonet ring 01-535 and the spring washer 01-608, and is reflected from there onto the film.

Eliminating the Light Leakage

This fault is cured by cementing a soft black woollen thread, about 1.5 to 2 mm thick and 24 mm long, into the light channel. Coat the surface of the thread with Teroson fluid, then push it into the channel between the bayonet ring 01-535 and the spring washer 01-608 (see fig. 80.1) with a bent metal hook (see fig. 79.1). Be sure to stick both ends of the thread well into the corners of the channel (see fig. 81.1).

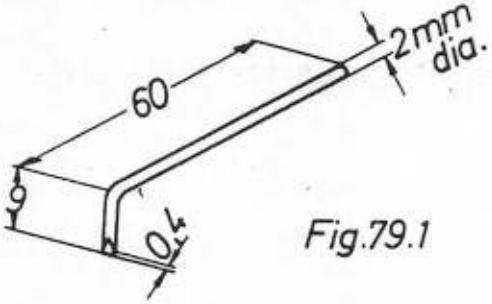

Fig.79.1

Once the cement is dry (after about 1 hour) insert a piece of film or fast sensitive paper into the Leica. Cover the lens - mounted as for shooting - with the lens cap. Fire a flash at the front of the ground glass window obliquely from above and from about 20 cm (8 inches) away.

If the job was properly carried out, the Leica should now be completely light-tight.

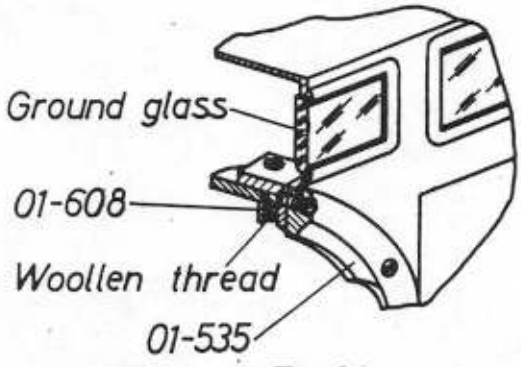

Fig.80.1

Press thread well into corners of channel

Fig.81.1

Daniel D. Teoli Jr.
Archival Collection

Curing Scratches on the Back of the Film

Sheet 55

The pressure plate behind the film track is made of black glass with a special surface finish.

If this glass surface becomes dirty, scratched, or chipped by knocks, the back of the film may show longitudinal scratches. An abrasion test with a piece of film will show up the state of the glass plate. First clean the surface of the glass plate thoroughly to remove any adhering dust and dirt. A linen rag moistened with petrol is ideal for the purpose.

Press the back of the piece of film moderately firmly against the glass plate with one finger, and rub it round with a circular movement. Be sure to rub over every portion of the glass plate.

If after this the back of the film shows circular scratches, the pressure plate needs replacing.

For removing and refitting the pressure plate see sheet 19.1.

Replacing the Shutter Blinds

Sheets 56 to 58

Tools, Gauges, and Spare Parts

1. Spring tension gauge	42 216 -Z1 W42
2. Blind advance gauge	42-253.01-Z1 A14
3. Spanner	42-253.01-257 W3
4. Spanner	42-253.01-338 W2
5. Screw driver, 2.8 mm dia.	
6. Screw driver, 3.2 mm dia.	
7. Teroson fluid	
8. Thinner D	
9. Shutter blind	42-253.01-265
10. Shutter blind	42-253.01-273

Note

If both blinds are damaged, start by replacing the second blind 01-265.

Special care is required in cleaning the cementing surfaces. Only the surface to be cleaned must come into contact with the thinner D.

Sequence of Operations

Remove the cover plate (see sheets 1 and 2).
Remove the housing (see sheets 3 and 4).

Unscrew the two screws 15-10.20-8 and the screw M 1.7 x 2.5 LN 120 21 on the mask 01-83 with the 3.2 mm dia. screw driver. Remove the mask 01-83.

Remove the cover plate 01-90 (see sheet 5, fig. 5.1).
Unscrew the two screws 15-10.20-10 on the self-timer 16-1 with the 2.8 mm dia. screw driver. Take off the self-timer.

Replacing the Second Blind (42-253.01-265)

Detach the damaged blind 01-265 from the points where cemented and remove. Carefully clean the cementing surfaces with thinner D. Place the tapes of the new blind 01-265 under the tape rollers of the spring roller 01-232, and pull through behind the small blind roller 01-246. Coat the tapes over a length of 28 mm with Teroson fluid, and cement to the small blind roller 01-246. Tension the spring of the small roller with the 2.8 mm dia. screw driver until the light trap is right against the ledge of the blind 01-273.

Check that both ledges are parallel.
Pull the blind 01-265 through behind the large blind roller 01-192 (the large roller 01-997 on Leica model Nos. 700 001 to 782 000). Let the Leica shutter run down completely and tension it again. (This is important to ensure correct engagement of the coupling wheel 01-355.)
Let the shutter run down. Turn the roller upwards as far as it will go. Wind the shutter through a distance of about 10 mm. Cover a 35 mm length of the blind 01-265 with an even thin layer of Teroson fluid, and cement it to the large blind roller 01-192 (01-997). Pull the ledge of the blind 01-265 to within 0.5 mm of the ledge of the blind 01-273. Check that the ledges are parallel, and the light trap evenly spaced at both ends from the masking strips.

Replacing the Shutter Blinds

Sheets 56 to 58

Tools, Gauges, and Spare Parts

1. Spring tension gauge	42 216 -Z1 W42
2. Blind advance gauge	42-253.01-Z1 A92
3. Spanner	42-253.01-257 W 3
4. Spanner	42-253.01-338 W 2
5. Screw driver, 2.8 mm dia.	
6. Screw driver, 3.2 mm dia.	
7. Teroson fluid	
8. Thinner D	
9. Shutter blind	42-253.01-265
10. Shutter blind	42-253.01-273

Note

If both blinds are damaged, start by replacing the second blind 01-265. Special care is required in cleaning the cementing surfaces. Only the surface to be cleaned must come into contact with the thinner D.

Sequence of Operations

Remove the cover plate (see sheets 1 and 2).
Remove the housing (see sheets 3 and 4).

Unscrew the two screws 15-10.20-8 and the screw M 1.7 x 2.5 LN 120 21 on the mask 01-83 with the 3.2 mm dia. screw driver. Remove the mask 01-83.

Remove the cover plate 01-90 (see sheet 5, fig. 5.1).
Unscrew the two screws 15-10.20-10 on the self-timer 16-1 with the 2.8 mm dia. screw driver. Take off the self-timer.

Replacing the Second Blind (42-253.01-265)

Detach the damaged blind 01-265 from the points where cemented and remove. Carefully clean the cementing surfaces with thinner D. Place the tapes of the new blind 01-265 under the tape rollers of the spring roller 01-232, and pull through behind the small blind roller 01-246. Coat the tapes over a length of 28 mm with Teroson fluid, and cement to the small blind roller 01-246. Tension the spring of the small roller with the 2.8 mm dia. screw driver until the light trap is right against the ledge of the blind 01-273.

Check that both ledges are parallel.
Pull the blind 01-265 through behind the large blind roller 01-192. Let the Leica shutter run down completely and tension it again. (This is important to ensure correct engagement of the coupling wheel 01-355.)

Let the shutter run down. Turn the roller upwards as far as it will go. Wind the shutter through a distance of about 10 mm. Cover a 35 mm length of the blind 01-265 with an even thin layer of Teroson fluid, and cement it to the large blind roller 01-192. Pull the ledge of the blind 01-265 to within 0.5 mm of the ledge of the blind 01-273. Check that the ledges are parallel, and the light trap evenly spaced at both ends from the masking strips.

Replacing the Shutter Blinds

Sheets 56 to 58

Tools, Gauges, and Spare Parts

1. Spring tension gauge	42 216 -Z1 W42
2. Blind advance gauge	42-253.01-Z1 A92
3. Spanner	42-253.01-257 W 3
4. Spanner	42-253.01-338 W 2
5. Screw driver, 2.8 mm dia.	
6. Screw driver, 3.2 mm dia.	
7. Teroson fluid special	
8. Terokal thinner D	
9. Shutter blind	42-253.01-923
10. Shutter blind	42-253.01-273

Note

If both blinds are damaged, start by replacing the second blind 01-923.

Special care is required in cleaning the cementing surfaces. Only the surface to the cleaned must come into contact with the Terokal thinner D.

Sequence of Operations

Remove the cover plate (see sheets 1 and 2).
Remove the housing (see sheets 3 and 4).

Unscrew the two screws 15-10.20-8 and the screw M 1.7 x 2.5 LN 120 21 on the mask 01-83 with the 3.2 mm dia. screw driver. Remove the mask 01-83.

Remove the cover plate 01-90 (see sheet 5, fig. 5.1).
Unscrew the two screws 15-10.20-10 on the self-timer 16-1 with the 2.8 mm dia. screw driver. Take off the self-timer.

Replacing the Second Blind (42-253.01-923)

Detach the damaged blind 01-923 from the points where cemented and remove. Carefully clean the cementing surfaces with Terokal thinner D. Place the tapes of the new blind 01-923 under the tape rollers of the spring roller 01-232, and pull through behind the small blind roller 01-246. Coat the tapes over a length of 28 mm with Teroson fluid, and cement to the small blind roller 01-246. Tension the spring of the small roller with the 2.8 mm dia. screw driver until the light trap is right against the ledge of the blind 01-273.
Check that both ledges are parallel.
Pull the blind 01-923 through behind the large blind roller 42-582.01-199. Let the Leica shutter run down completely and tension it again. (This is important to ensure correct engagement of the coupling wheel 01-355.)
Let the shutter run down. Turn the roller upwards as far as it will go. Wind the shutter through a distance of about 10 mm. Cover a 35 mm length of the blind 01-923 with an even thin layer of Teroson fluid, and cement it to the large blind roller 42-582.01-189. (When using main roller 42-582-199 the shutter is not glued to the main roller but clamped to it by means of the clamping ledge 01-918.) Pull the ledge of the blind 01-923 to within 0.5 mm of the ledge of the blind 01-273. Check that the ledges are parallel, and the light trap evenly spaced at both ends from the masking strips.

Replacing the Shutter Blinds

Continued from sheet 56

Tension the shutter of the Leica, set the shutter speed dial to B, and let the first blind run down. Immediately check with the gauge 42-253.01-Z1 A14 that the leading edge of the ledge of the second shutter blind is 2.7 to 3.2 mm outside the edge of the picture aperture.
Tension the shutter again.
Check with the spring tension gauge 42 216-Z1 W42 whether the scale reading remains at 19 to 20 when the spring tension of the spring tension gauge drops.
Make sure that the ledge is properly in position in the light trap.

Important Note:
After cementing decrease the spring tension on the roller 01-246 to the point where the blind tapes are just taut. Leave to dry for 12 hours.

Tension the blind roller and test as described above.

Check the camera operations, especially the shutter speeds (see sheets 14 to 16).

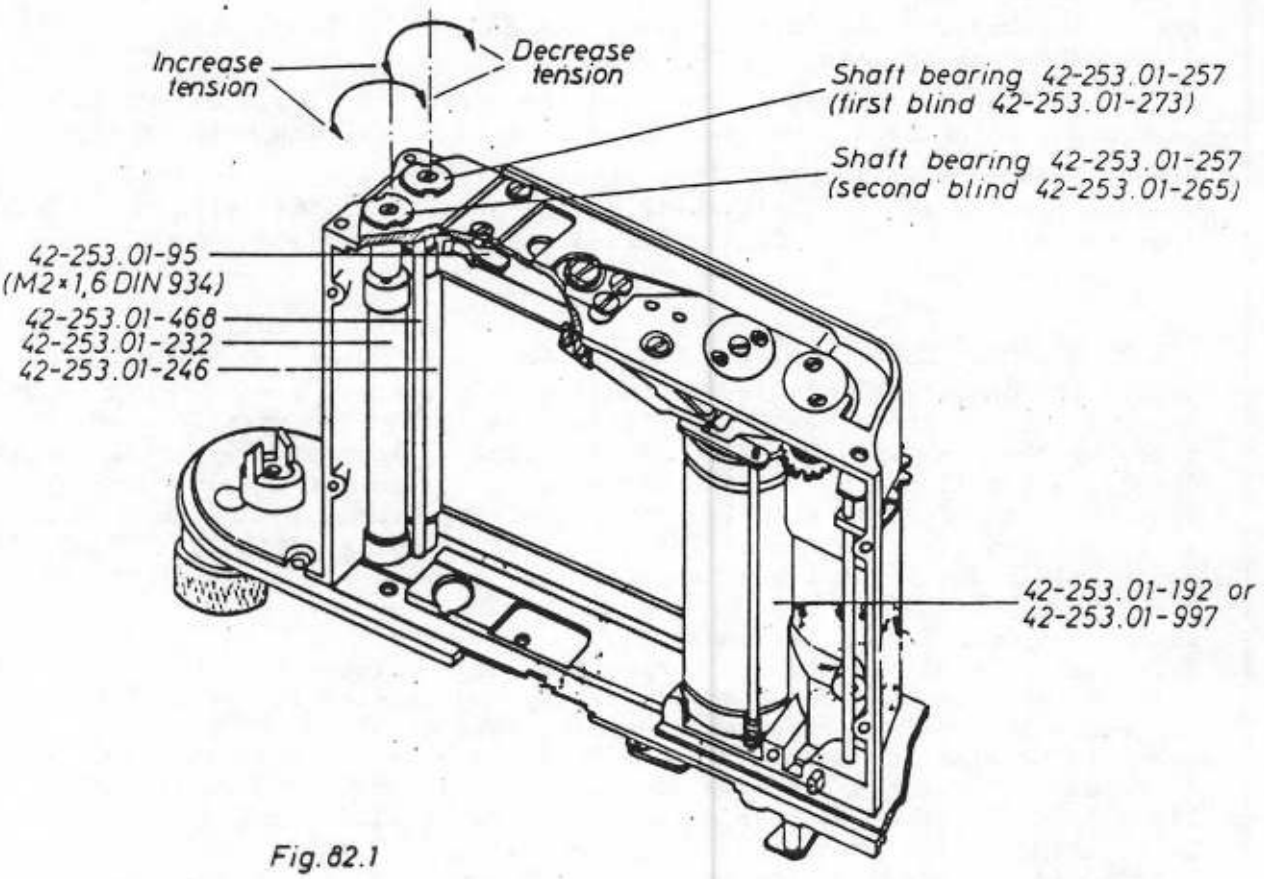

Fig. 82.1

Replacing the Shutter Blinds

Continued from sheet 56

Tension the shutter of the Leica, set the shutter speed dial to B, and let the first blind run down. Immediately check with the gauge 42-253.01-Z1 A92 that the leading edge of the ledge of the second shutter blind is 3.05 to 3.55mm outside the edge of the picture aperture.
Tension the shutter again.
Check with the spring tension gauge 42 216-Z1 W42 whether the scale reading remains at 19 to 20 when the spring tension of the spring tension gauge drops.
Make sure that the ledge is properly in position in the light trap.

Important Note:

After cementing decrease the spring tension on the roller 01-246 to the point where the blind tapes are just taut. Leave to dry for 12 hours.

Tension the blind roller and test as described above.

Check the camera operations, especially the shutter speeds (see sheets 14 to 16).

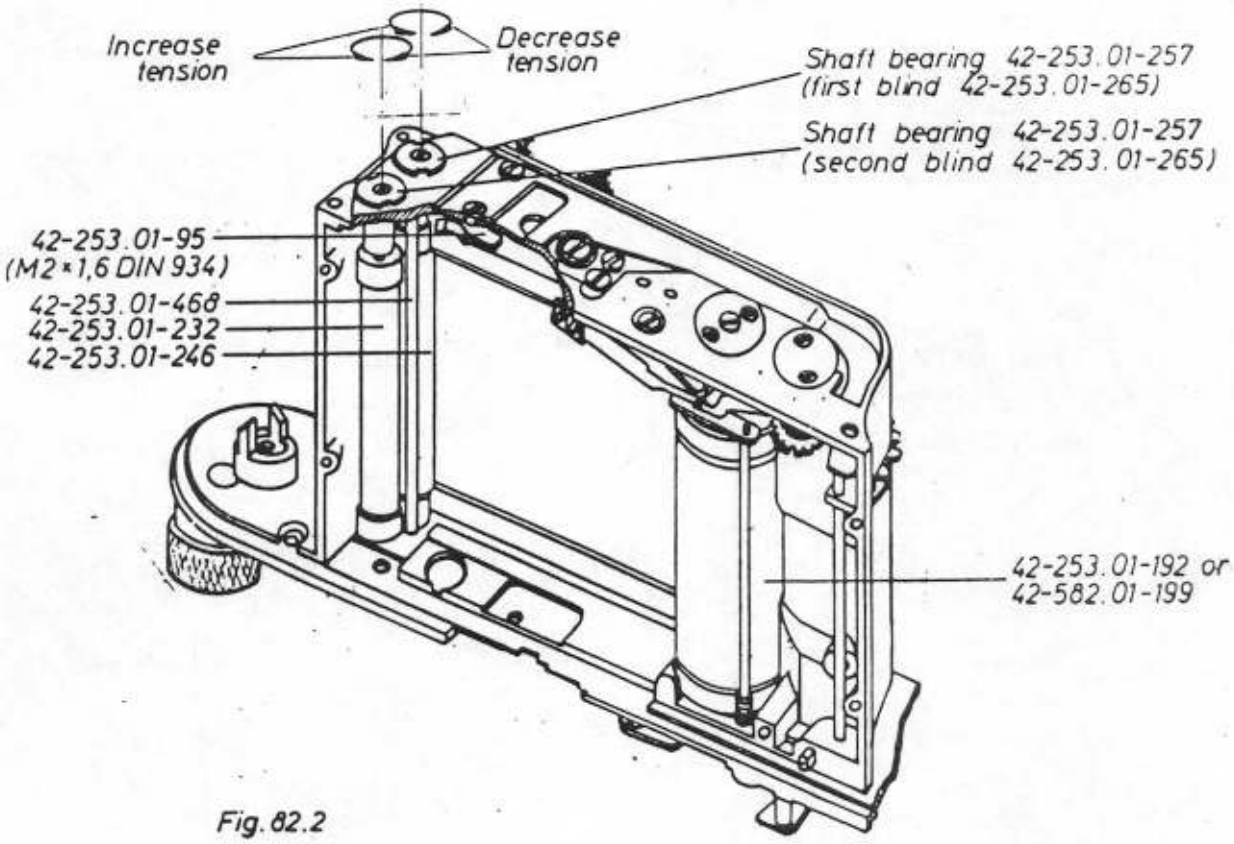

Fig. 82.2

Replacing the Shutter Blinds

Continued from sheet 56

Tension the shutter of the Leica, set the shutter speed dial to B, and let the first blind run down. Immediately check with the gauge 42-253.01-Z1 A92 that the leading edge of the ledge of the second shutter blind is 3.05 to 3.55 mm outside the edge of the picture aperture.
Tension the shutter again.
Check with the spring tension gauge 42 216-Z1 W42 whether the scale reading remains at 19 to 20 when the spring tension of the spring tension gauge drops.
Make sure that the ledge is properly in position in the light trap.

Important Note:

After cementing decrease the spring tension on the roller 01-246 to the point where the blind tapes are just taut. Leave to dry for 12 hours.

Tension the blind roller and test as described above.

Check the camera operations, especially the shutter speeds (see sheets 14 to 16).

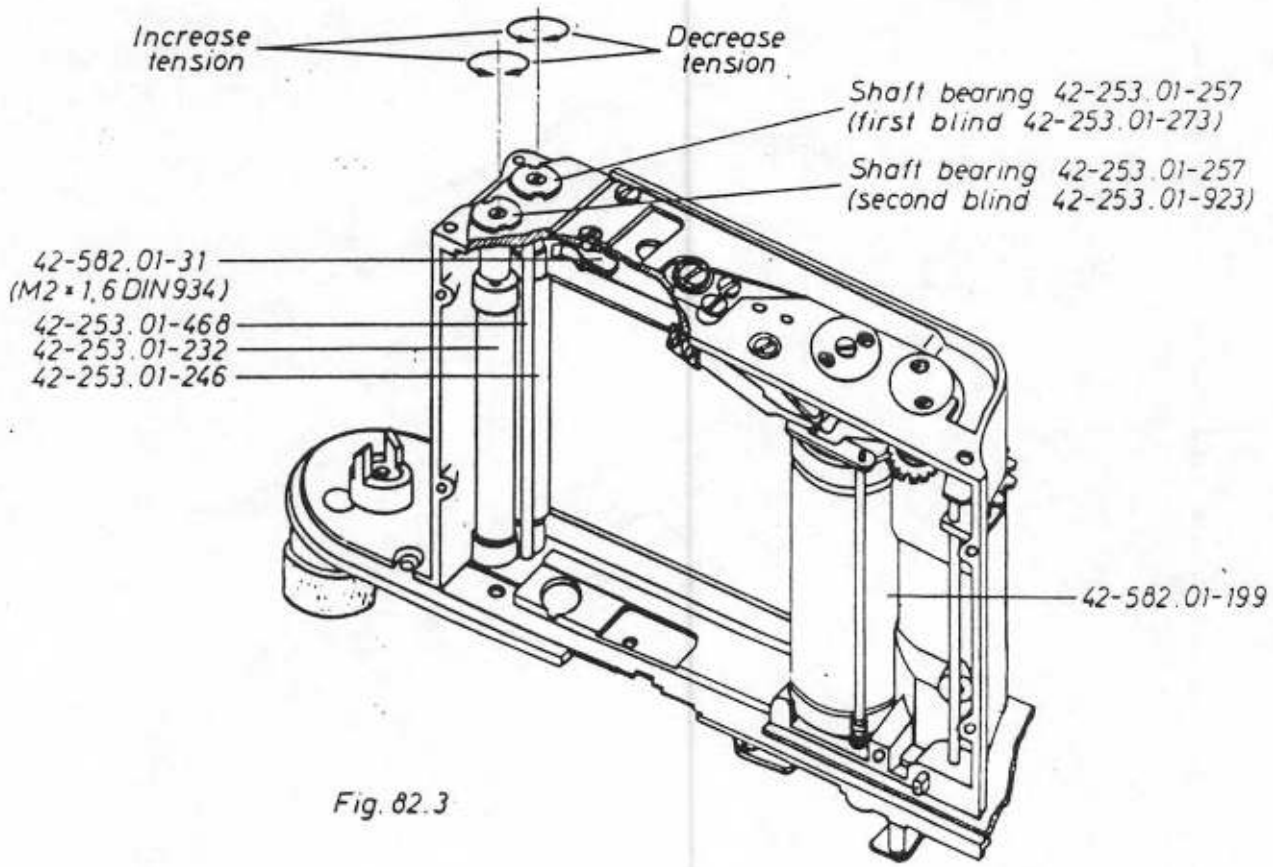

Fig. 82.3

Replacing the Shutter Blinds

Continued from sheets 56 and 57

Replacing the First Blind (42-253.01-273)

Carefully lift the tube 01-468 out of the hole in the main body. Remove the nut M 2 x 1.6 DIN 934 with the spanner 42-253.01-338 W2, and lift out the guide bracket 01-95 (see fig. 82.1).
Unscrew the shaft bearing 01-257 with the spanner 42-253.01-257 W3. Detach the blind 01-273 from the points where cemented and remove. Carefully clean the cementing surfaces with thinner D. Coat a 22 mm length of the blind 01-273 evenly with a thin film of Teroson fluid, and cement to the blind roller 01-232.

Place the blind roller 01-232 on top of the tapes of the second blind (01-265) and insert in the bearing holes in the main body. Check that the tape rollers lie against the tapes. Screw in the shaft bearing 01-257 with the spanner 42-253.01-257 W3.

Insert the ledge of the blind 01-273 underneath the tapes of the blind 01-265 and into the light trap. Pull the tapes of the blind 01-273 through behind the large roller 01-192 (01-997), coat evenly with a thin layer of Teroson fluid over a length of 45 mm, and cement to the two tape rollers of the large blind roller.
Press the release button and check for the correct overlap between the two ledges (see fig. 83.1); also check both ledges are parallel.

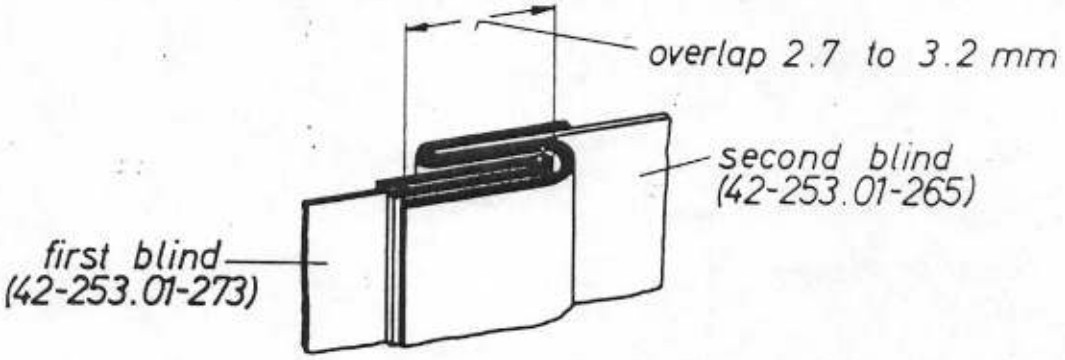

Fig.83.1

Replace the tube 01-468. Check that the wiring has not been damaged.

Release the tension of the shutter to the point where the blind tapes are still taut. Leave to dry for 12 hours.
Tension the shutter of the Leica.
Tension the spring of the blind roller with the 2.8 mm dia. screw driver.
Check with the spring tension gauge 42 216-Z1 W42 whether the reading remains at 17 to 18 on the scale when the spring tension drops.

Refit the cover plate 01-90 (see fig. 5.1 on sheet 5).
Replace the self-timer mechanism 16-1. Screw in the two screws 15-10.20-10 with the 2.8 mm dia. screw driver.

Refit the housing (see sheets 3 and 4).

Refit the cover plate (see sheets 1 and 2).

Replacing the Shutter Blinds

Continued from sheets 56 and 57

Replacing the First Blind (42-253.01-273)

Carefully lift the tube 01-468 out of the hole in the main body. Remove the nut M 2 x 1.6 DIN 934 with the spanner 42-253.01-338 W2, and lift out the guide bracket 01-95 (above No. 963 001 part 42-582.01-31) (see fig. 82.1).

Unscrew the shaft bearing 01-257 with the spanner 42-253.01-257 W3. Detach the blind 01-273 from the points where cemented and remove. Carefully clean the cementing surfaces with Terokal thinner D. Coat a 22 mm length of the blind 01-273 evenly with a thin film of Teroson fluid, and cement to the blind roller 01-232.

Place the blind roller 01-232 on top of the tapes of the second blind (01-265) and insert in the bearing holes in the main body. Check that the tape rollers lie against the tapes. Screw in the shaft bearing 01-257 with the spanner 42-253.01-257 W3.

Insert the ledge of the blind 01-273 underneath the tapes of the blind 01-265 and into the light trap. Pull the tapes of the blind 01-273 through behind the large roller, coat evenly with a thin layer of Teroson fluid over a length of 45 mm, and cement to the two tape rollers of the large blind roller.

Press the release button and check for the correct overlap between the two ledges (see fig. 83.2); also check both ledges are parallel.

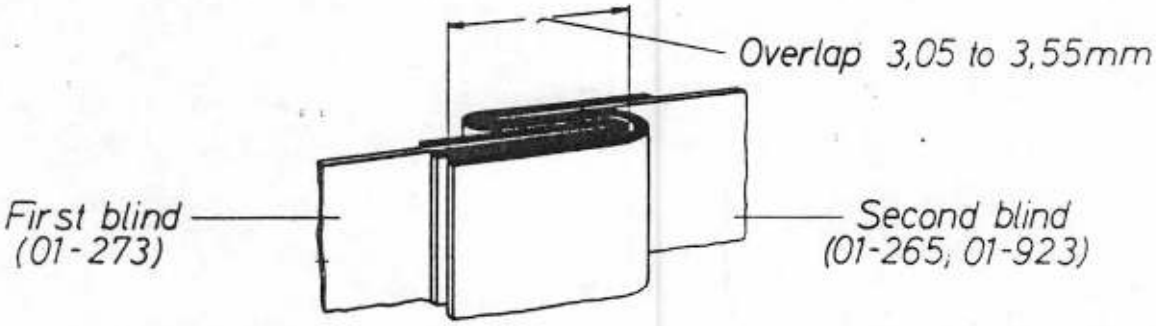

Fig. 83.2

Replace the tube 01-468. Check that the wiring has not been damaged.

Release the tension of the shutter to the point where the blind tapes are still taut. Leave to dry for 12 hours.
Tension the shutter of the Leica.
Tension the spring of the blind roller with the 2.8 mm dia. screw driver.
Check with the spring tension gauge 42 216-Z1 W42 whether the reading remains at 17 to 18 on the scale when the spring tension drops.

Refit the cover plate 01-90 (see fig. 5.1 on sheet 5).
Replace the self-timer mechanism 16-1. Screw in the two screws 15-10.20-10 with the 2.8 mm dia. screw driver.

Refit the housing (see sheets 3 and 4).

Refit the cover plate (see sheets 1 and 2).

Eliminating Light Leakage on the Leica Shutter

Sheets 59 to 60

Appliances, Materials, and Spare Parts

1. Locking pin — 42-253.01-Z1 W84
2. Cementing template — 42-253.01-8 W208
3. Araldit 121 S cement
   Hardener 951
4. Screw driver, 2.8 mm dia.
5. Flat needle file
6. Black matt lacquer
7. 2 masking strips — 42-253.01-10

Sequence of Operations

Remove the housing (see sheets 3 and 4).

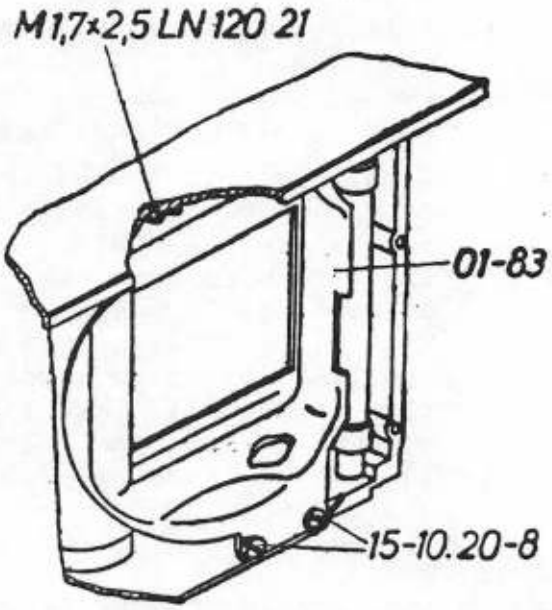

Fig. 84.1

Unscrew the two screws 15-10.20-8 and the screw M 1.7 x 2.5 LN 120 21 with the 2.8 mm dia. screw driver. Remove the mask 01-83 (see fig. 84.1).

Tension the shutter of the Leica. Set the shutter speed dial to B, and press the release button to let the first shutter blind run down. Keep the release button depressed with the aid of the locking pin 42-253.01-Z1 W84.

Prepare the Araldit 121 S (see instructions for the use of adhesives, sheet 3.1).

Coat the seating surface of the two masking strips 42-253.01-10 with Araldit 121 S, and position the masking strips on the main body as shown in fig. 85.1. Take special care not to let the blind tapes come into contact with the adhesive.

Press down the masking strips with a small wooden stick, and slide them about to distribute the cement evenly and expel any air bubbles.
Place the cementing template 42-253.01-8 W208 over the masking strips so that the proud ledges are positioned in the grooves of the cementing template. Place the blind tapes over the cementing template. Push the masking strips flush with the cementing template at the end facing the large blind roller. This sets the distances marked in fig. 85.1.

Let the Araldit 121 S harden thoroughly (see instructions for the use of adhesives, sheet 3.1).

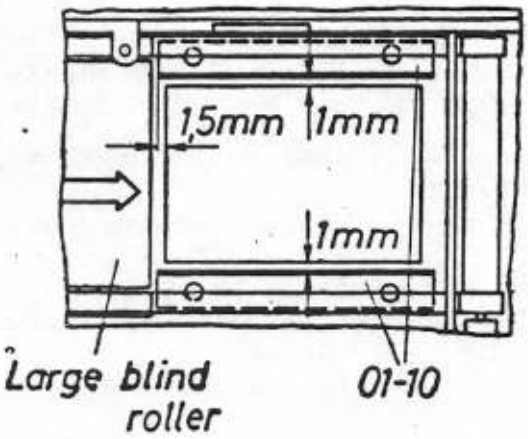

Fig. 85.1

Eliminating Light Leakage on the Leica Shutter

Continued from sheet 59

When the adhesive has set, remove the cementing template. Make sure that the proud ledges of the masking strips are free from all traces of Araldit.

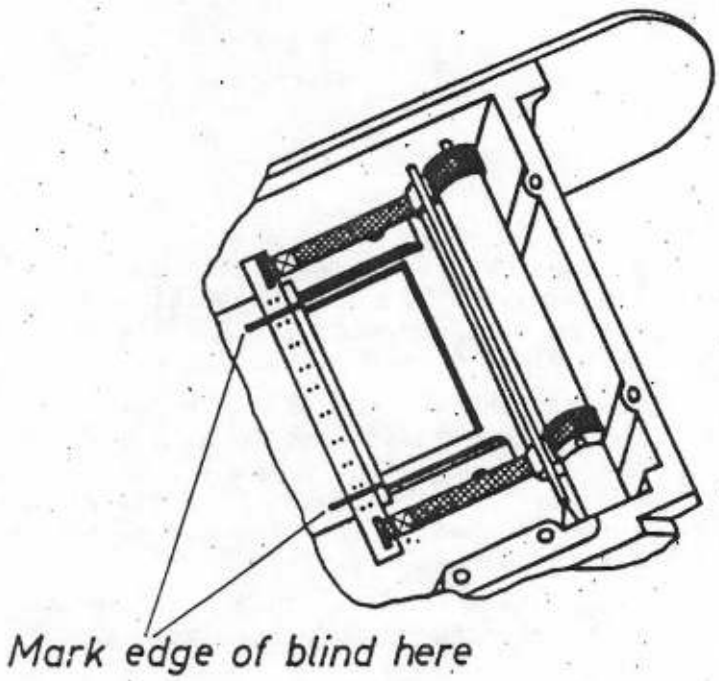

Fig. 86.1

Unscrew the locking pin 42-253.01-Z1 W84 from the release button and let the second shutter blind run down.

Turn the large blind roller in the direction of the arrow (see fig. 85.1) to bring the leading edge of the second shutter blind into the picture aperture so that the light trapping strip can be marked next to the masking strips (see fig. 86.1).

Carefully pull the marked edge of the blind out of the main body, and support it - with the light trap on top - over a strip of wood laid across the Leica. File off the marked portions of the light trapping strip with a flat needle file (see fig. 87.1). Do not cut into the portions of the edge that are inside the picture aperture.

Carefully remove all filings.
Coat the filed edges with matt black lacquer.

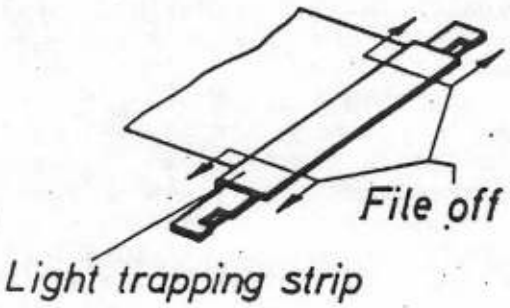

Fig. 87.1

When the shutter runs down, the filed off blind edge must not touch the masking strips.

Two strips of velvet are glued to the mask 01-83. The pile of the velvet should protrude 0.5 to 1 mm beyond the metal frame.

Trim the pile to this length with a pair of sharp scissors.
Refit the mask 01-83 with two screws 15-10.20-8 and one screw M 1.7 x 2.5 LN 120 21 using the 2.8 mm dia. screw driver. The edges of both shutter blinds must run freely between the mask and the masking strips. If necessary, bend the supporting points of the mask 01-83 accordingly.

Refit the housing (see sheets 3 and 4).

Set the self-timer mechanism (see sheets 8 and 9).

Check the shutter speeds (see sheets 14 to 16).

Repairs to the Winding and Release Mechanism

Sheet 61

State of the Camera

The Leica cannot be wound. The edges of both shutter blinds are visible in the picture aperture.

Cause

In moist climates the brake of the first shutter blind may block.

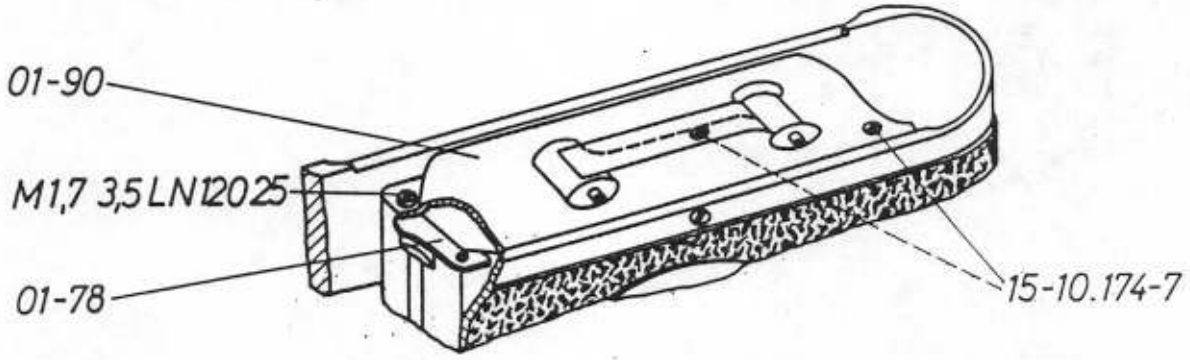

Fig. 88.1

Cure

Unscrew the two screws M 1.7 x 3.5 LN 120 25 and the two screws 15-10.174-7 with the 2.5 mm dia. screw driver. Remove the cover plate 01-90 and the locking plate 01-78. Then pull the second shutter blind carefully out of the light trap of the first blind. Turn the setting screw for the brake of the first shutter blind (see fig. 7.1 on sheet 6), and carefully push the edge of the first shutter blind behind the edge of the picture aperture. The shutter can now be tensioned and released. To set the brake of the first shutter blind, proceed as described on sheet 6.

Fitting the Finder Frame Selector

Sheet 62 to 65

Appliances, Tools, and Materials

1. Milling jig	42-253.01- 8 W215
2. Countersink bit	42-253.01-U555 W 52
3. Drilling and countersinking rear support	42-253.01-U555 W 53
4. Supplementary drilling jig	42-253.01-U555 W 54
5. Spanner	42-253.01- 635 W 2
6. Spanner	42-253.01- 637 W 5
7. End milling cutter	A 3.7 x 3 LN 148 21 SS 40 mm long
8. Moltopren foam rubber sheet	5 x 50 x 85 mm
9. Lubricant No. 830	
10. Twist drill, 6.4 mm dia.	
11. Screw tap M 7 x 0.5	
12. Screw driver, 2.5 mm dia.	
13. Screw driver, 3.5 mm dia.	
14. Tweezers	

Spare Parts

15. Slider bar, upper	42-253.01-626
16. Slider bar, lower	42-253.01-627
17. Spring	42-253.01-630
18. Bush	42-253.01-634
19. Guide sleeve	42-253.01-635
20. Cam shaft	42-253.01-636
21. Lever	42-253.01-641
22. Light trapping strip	42-253.01-507
23. Screw	15-10.170-12
24. Screw (2 required)	15-10.171- 6
25. Screw (2 required)	15-12.02 -11
26. angle (1 required)	42-253.01-632

Fitting the Finder Frame Selector

Continued from sheet 62

Sequence of Operations

Remove the housing (see sheets 3 and 4).

Unscrew the screws 15-10.171-8 and 15-10.171-9 from the housing with the 3.5 mm dia. screw driver. Lift off the slider bar 01-542, the spring 01-546, and the spring pin 01-545 (see fig. 89.1).

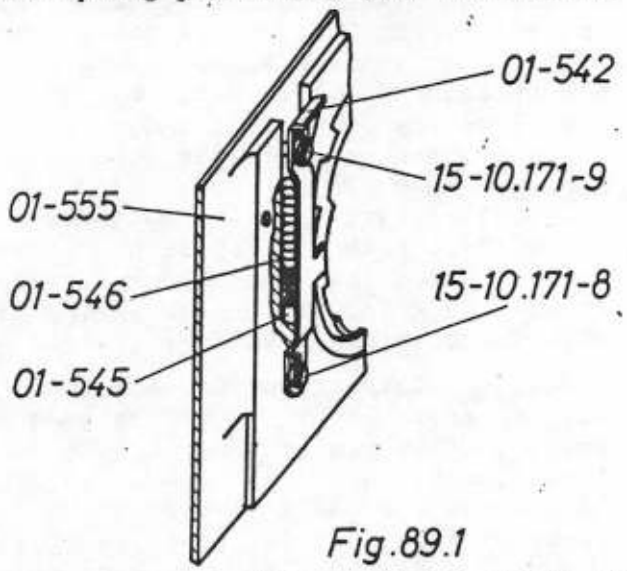

Fig.89.1

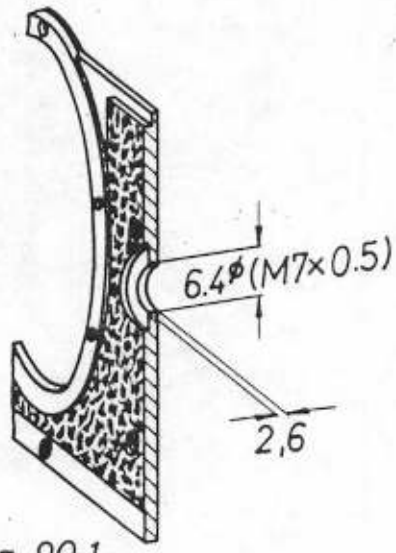

Fig.90.1

1. Place the drilling jig 42-253.01-U555 W54 on the housing and push both over the drilling and countersinking rear support 42-253.01-U555 W53, and drill through with the 6.4 mm dia. twist drill. Countersink with the countersink bit 42-253.01-U555 W52 on the drilling and countersinking rear support 42-253.01-U555 W53 (see fig. 90.1). Tap with the screw tap M 7 x 0.5.

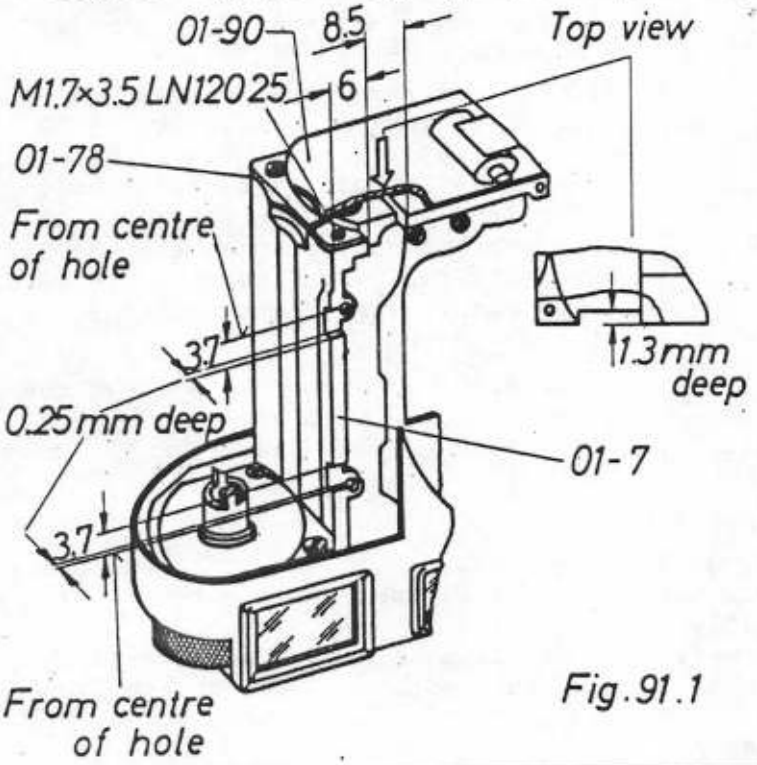

Fig.91.1

2. Unscrew the two screws M 1.7 x 3.5 LN 120 25 and the two screws 15-10.174-7 from the main body 01-7 with the 2.5 mm dia. screw driver. Remove the cover plate 01-90 and the locking plate 01-78 (see fig. 5.1 on sheet 5).

   Carefully seal off the whole of the front of the main body with sponge rubber. Use the milling jig 42-253.01-8 W215 to grind down the main body at three points (see fig. 91.1) with the end milling cutter A 3.7 x 3 LN 148 21 SS. Preferably remove the millings with a vacuum cleaner; the size of the nozzle required will depend on its suction power (see figs. 94.1, 95.1, and 96.1).

Fitting the Finder Frame Selector

Continued from sheets 62 and 63

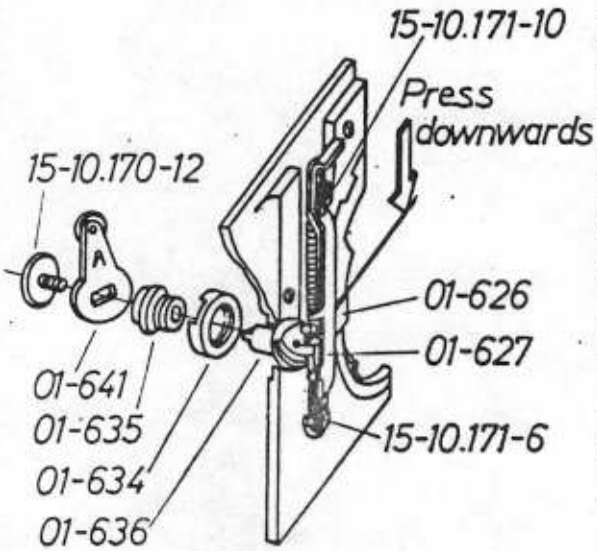

Fig.92.1

Assembly

Insert the spring 01-546 and the spring pin 01-545 in the guide channel of the housing (see fig. 89.1). Grease the upper and lower surfaces along the slots of the slider bars 01-626 and 01-627 (see fig. 92.1). Place the slider bar 01-626 over the spring 01-546, and place a washer 15-12.02-11 on top of each slot. Place the slider bar 01-627 on top of 01-626, and press both against the housing in the direction of the spring 01-546. First fit the top screw 15-10.171-6, and then the bottom screw 15-10.171-6 with the 3.5 mm dia. screw driver. Check that the slider bars move freely. Hook in the tension spring 01-630 with the tweezers (see fig. 92.1).

Grease the bearing surface and the cam of the cam shaft 01-636 with lubricant No.830. Press the lower slider bar 01-626 in the direction of the arrow (see fig. 92.1), insert the cam shaft 01-636 between the two clamping lugs, and let go of the slider bar. Insert the bush 01-634 in the countersunk space, push the guide sleeve 01-635 onto the cam shaft 01-636, and tighten with the spanner 42-253.01-635 W2. The cut-out in the bush 01-634 must be centred accurately on top (see fig. 93.1). Mount the lever 01-641, and fit the screw 15-10.170-12 with the spanner 42-253.01-637 W5.

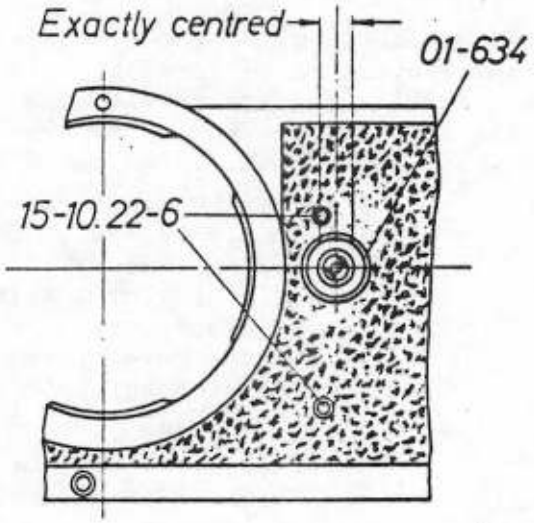

Fig.93.1

Fit the housing (see sheets 3 and 4). Before screwing in the screws 15-10.22-6 (see fig. 93.1) insert the light trapping strip 01-507 from the cassette side of the Leica into the slots provided in the main body for the purpose (see fig. 91.1). Make sure that the closed section of the light trapping strip faces towards the open side of the camera.

Screw down the cover plate 01-90 and the locking plate 01-78 with two screws M 1.7 x 3.5 LN 120 25 and two screws 15-10.174-7. Use the 2.5 mm dia. screw driver.

Testing

Fit a 5 cm lens in the camera. Pushing the lever to the right should make the image frame of the 9 cm lens appear in the finder; pushing to the left should make the 13.5 cm frame visible.
Check also that the corresponding finder frame appears in the viewfinder on inserting a 9 cm Elmar or a 13.5 cm Hektor lens. See also the section on finder masks on sheet 12.
Set the self-timer (see sheets 8 and 9).
Check the spacing between the bayonet ring and the film track (see sheet 18).

Fitting the Finder Frame Selector

Continued from sheets 62, 63, and 64

Instructions for the milling jig 42-253.01-8 W215

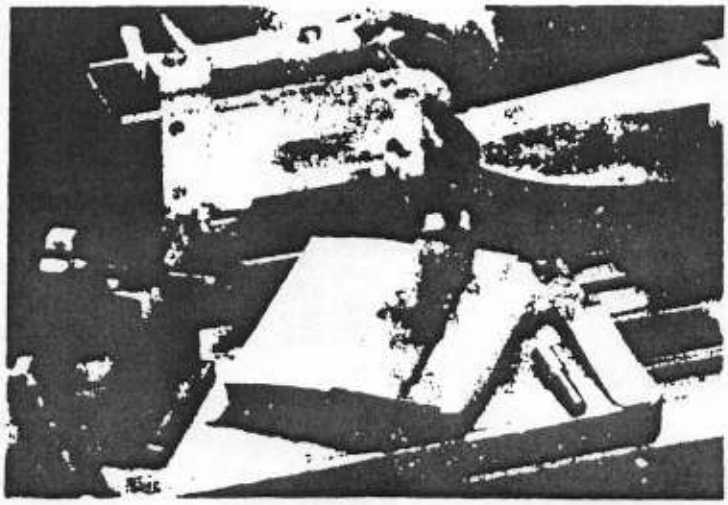

Milling jig
42-253.01-8 W215

The nozzle of the vacuum cleaner is visible at the right of the picture.

Fig.94.1

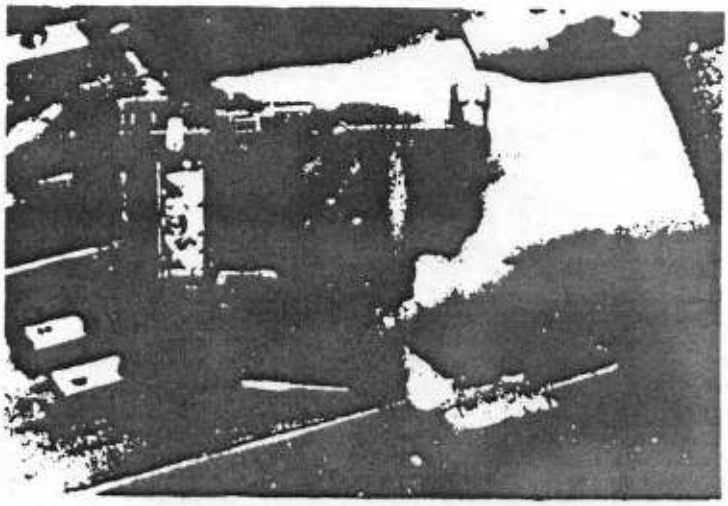

Carefully seal off the mask and film transport shaft with foam rubber.

Fig.95.1

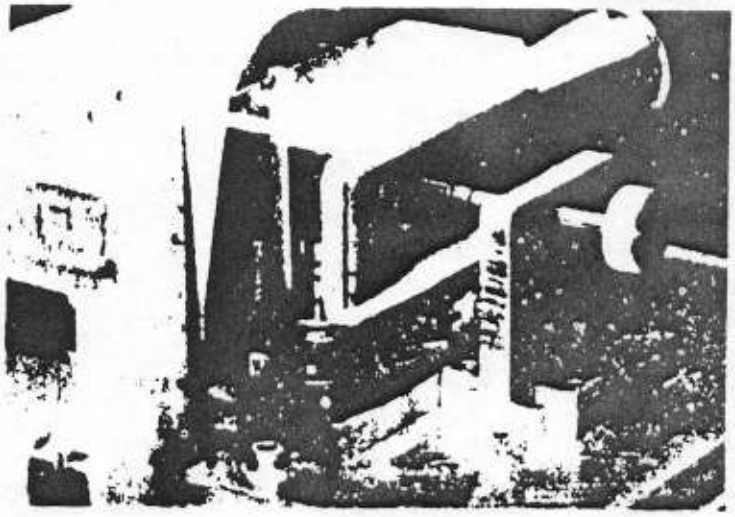

Milling jig with main body mounted ready for milling.

Fig.96.1

Repairs to the Rewind Mechanism

Sheets 66 and 67

Note

With cameras up to No. 700 800 the drilling jig 42-253.01-8 W195, the countersinking jig 42-253.01-8 W196, the 4 mm dia. twist drill, and the 5.8 mm dia. milling cutter are required. The same parts, as listed below, are fitted in every case.

Tools and Appliances

1. Spanner	42-253.01-80 W 8
2. Spanner	42-253.01-79 W 4
3. Drilling jig	42-253.01- 8 W195
4. Countersinking jig	42-253.01- 8 W196
5. Screw driver, 2.5 mm dia.	
6. Screw driver, 3.5 mm dia.	
7. Twist drill, 4 mm dia.	
8. Milling cutter, 5.8 mm dia.	
9. Lead pliers	

Spare Parts

10. Bearing	42-253.01-375
11. Driver	42-253.01-377
12. Sliding sleeve	42-253.01-383
13. Spring washer	42-253.01-386
14. Shaft	42-253.01-389

State of the Camera

(a) The rewind knob does not rewind the film; the knob and sliding sleeve can be pulled off the camera.

(b) Without a film in the camera, the rewind knob grinds or jams on turning.

Cause

(a) Breakage of the threaded shaft of the driver.

(b) Teeth stripped on one of the cog wheels.

Repair

Remove the cover plate (see sheets 1 and 2).

Remove the rangefinder (see sheet 5).

Pull the sleeve 01-376 and the sealing washer off the bearing 01-375. Unscrew the three screws M 2 x 2.6 LN 120 21 with the 3.5 mm dia. screw driver, and lift off the bearing 01-375 (see fig. 97.1).

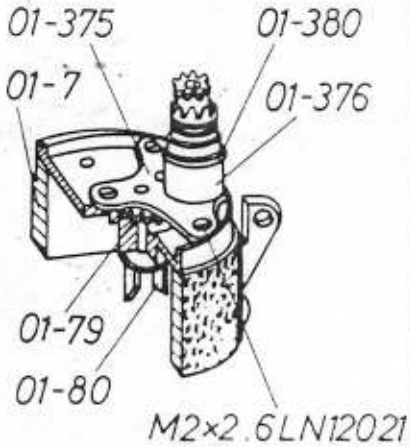

Fig. 97.1

Repairs to the Rewind Mechanism

Continued from sheet 66

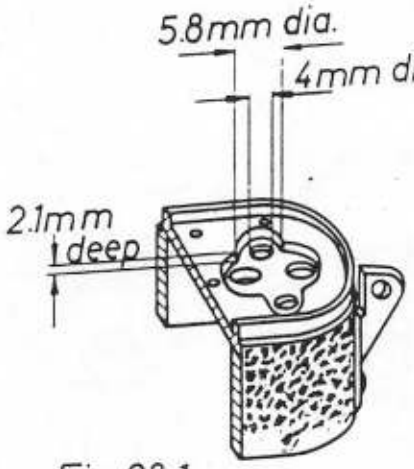

Fig.98.1

For Leica Nos. 700 001 to 700 800

** Hold the rewind shaft 01-80 with the spanner 42-253.01-80 W8, and unscrew the gear wheel 01-79 with the spanner 42-253.01-79 W4.

Mount the drilling jig 42-253.01-8 W195 on the main body 01-7, and drill through with the 4 mm dia. twist drill.
Fit the countersinking jig 42-253.01-8 W196, and mill down to a depth of 2.1 mm with the 5.8 mm dia. milling cutter (see fig. 98.1).

Carefully remove all millings!

Hold the rewind shaft 01-80 with the spanner 42-253.01-80 W8, and screw the gear wheel 01-79 to it with the spanner 42-253.01-79 W4. Mount the new bearing 01-375 on the main body 01-7, and screw down with three screws M2 x 2.6 LN 120 21. Use the 3.5 mm dia. screw driver for the purpose.

In case (a)
Pull out the shaft 01-389 from the bearing 01-375 (before refitting the latter on the main body), remove the spring washer 15-12.03-15 (see fig. 99.1) and place this into the recess of the bearing 01-375. Insert a new shaft 01-389 into the bearing 01-375, screw a new driver 01-377 into the shaft 01-389 by hand, hold with the lead pliers, and screw down tight with the 2.5 mm dia. screw driver.

In case (b)
1. Teeth stripped on gear wheel 01-79: replace the gear wheel 01-79 by a new one. Proceed as described at ** above.
2. Teeth stripped on the coupling wheel of the bearing 01-375: fit a new bearing 01-375, and assemble as described under (a) above.
3. Teeth stripped on the shaft 01-389: replace the shaft 01-389 as described under (a) above.

Mount the assembled bearing 01-375 on the main body 01-7, and screw down with three screws M 2 x 2.6 LN 120 21, using the 3.5 mm dia. screw driver. Push the sleeve 01-376 and the sealing washer 01-380 over the bearing.

After assembly put a cassette and spool with film into the camera, and check the operation of the rewind mechanism.

Refit the rangefinder (see sheet 5).

Refit the cover plate (see sheets 1 and 2).

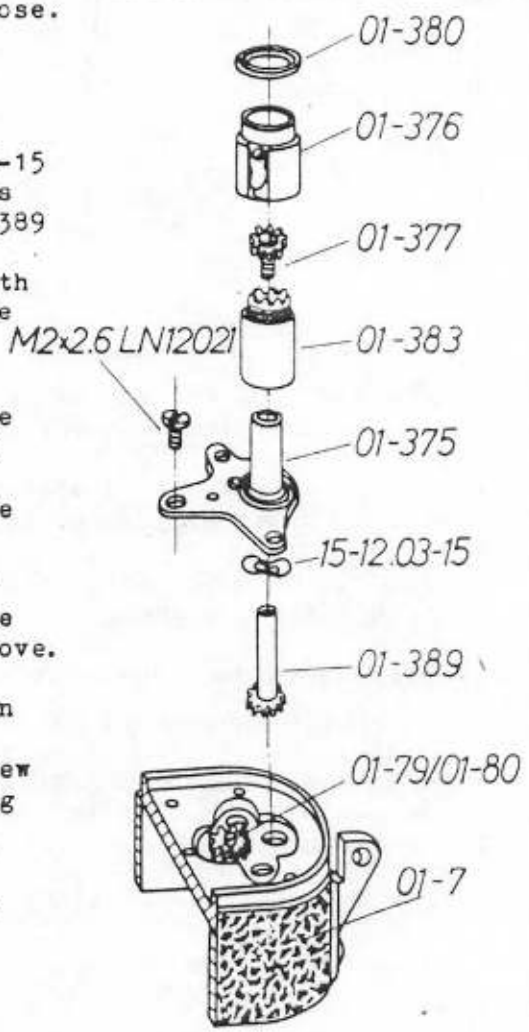

Fig.99.1

Additional Work when Fitting a New Blind Roller 42-253.01-192

Sheet 68

If the large blind roller 01-192 is replaced on Leica model Nos. between 782 001 and 801 500, the end of the catch on the slow speed escapement 15-1 needs filing down (see fig. 100.1).

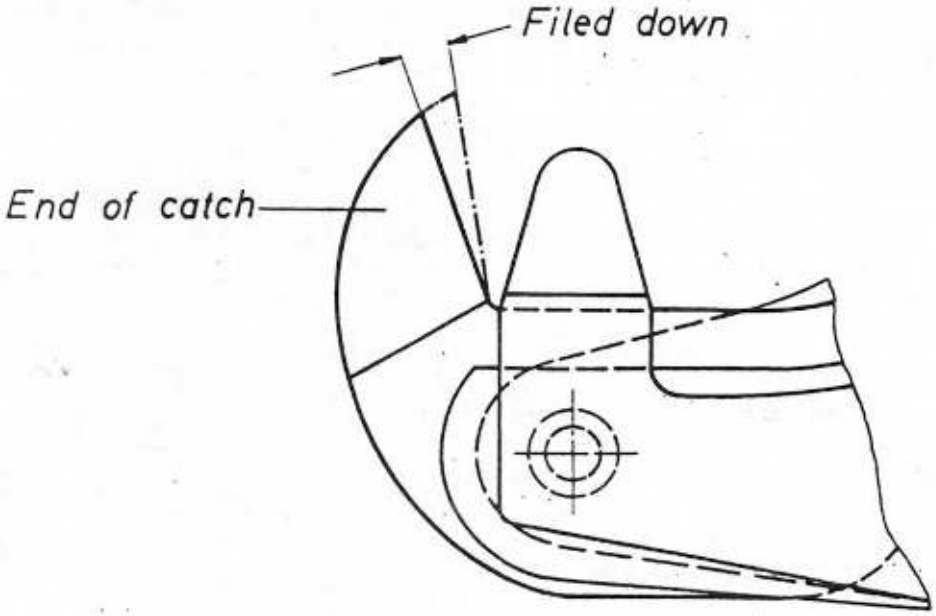

Fig. 100.1

The more the end of the catch is filed down, the shorter will be the exposure at the 1-second setting.

If the slow speed escapement 15-1 is replaced at the same time as the large blind roller 01-192, no filing down is necessary.

With Leica model Nos. from 801 501 onwards the large blind roller can be fitted without change.

This adjustment does not affect Leica model Nos. below 782 000.

Clean the escapement in a mixture of 1 part oil 491 to 30 parts of lead-free petrol. Tension and release the escapement mechanism repeatedly in this bath. Keep the bath scrupulously clean. Afterwards lubricate the two bearings of the ratchet wheel with just a trace of oil 491. This is best done with the OBAMA oil injector (scale setting 10).

For removal and refitting of the escapement mechanism see sheet 17.

After completion of the work check all camera operations.

Fitting a Driving Shaft for Single-Stroke Film Winding

Sheets 69 and 70

Tools

1. Screw driver, 3.5 mm dia.
2. Screw driver, 2.8 mm dia.

Note

The driving shaft 01-855 can be fitted to all Leica M3 cameras from serial No. 700 001. The following points need attention:

On models with serial Nos. from 700 001 to 782 000 unscrew the retaining ring 01-134 from the driving shaft, and insert the sealing washer 01-148 in the groove underneath the retaining ring (see fig. 101.1).

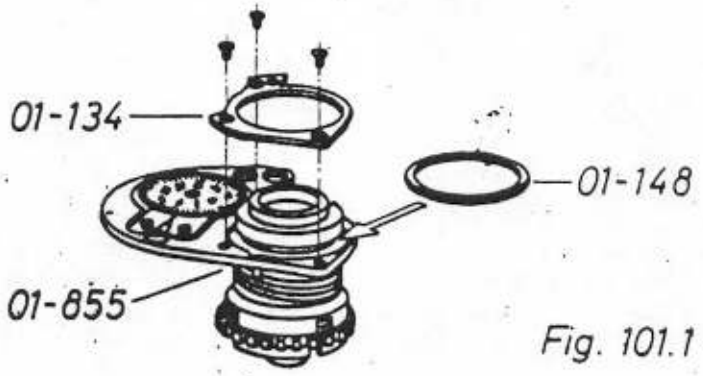

Fig. 101.1

On models with serial Nos. from 700 001 to 854 000 the plate 01-309 must be machined down as shown in fig. 102.1 below.

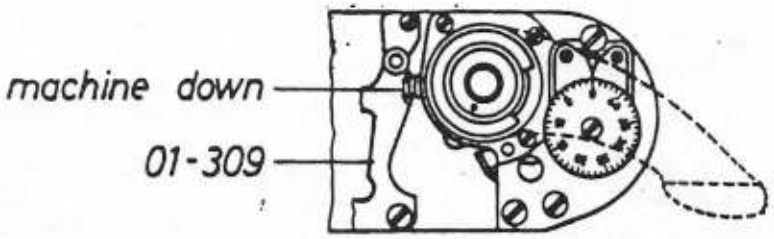

Fig. 102.1

On models with serial Nos. from 700 001 to 919 250 the lever 01-34 must be replaced by the lever 01-371 (see Spare Parts List, sheet 2).

On models with serial Nos. from 700 001 to 963 000 the following parts are discarded:
Release button 01-35, sleeve 01-38, and washer 15-12.07-7/1.
These are replaced by the release button 42-582.01-28 and the sleeve 42-582.01-39.

Fitting a Drive Shaft for Single-stroke Film Winding

Continued from sheet 69

Sequence of operations

Tension the shutter of the Leica.

Remove the cover plate (see sheets 1 and 2).

Unscrew the three screws M 2 x 3 LN 120 21 with the 3.5 mm dia. screw driver. Remove the drive shaft 01-135 or 01-994 (double-stroke wind).

Before fitting the drive shaft 01-855 (single-stroke wind) watch the position of the gear wheel on the drive shaft 01-855. As shown in fig. 103.1, the left-hand edge of one of the three cut-outs of the gear wheel should be in line with the outer left-hand edge of the hole for the release pin, and with the screw.

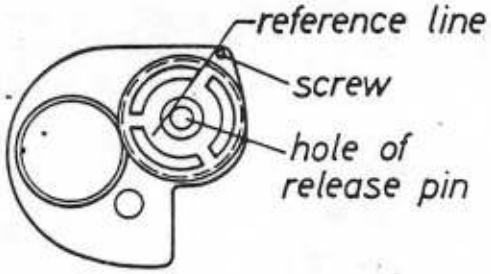

Fig. 103.1

In addition the position of the plate on the winding shaft 01-512, visible in the spood chamber, is important. The cut-out in the plate should point directly at the hole drilled in the main body, so that the projections of the sides of the cut-out are both tangential to the drill hole (see fig. 104.1).

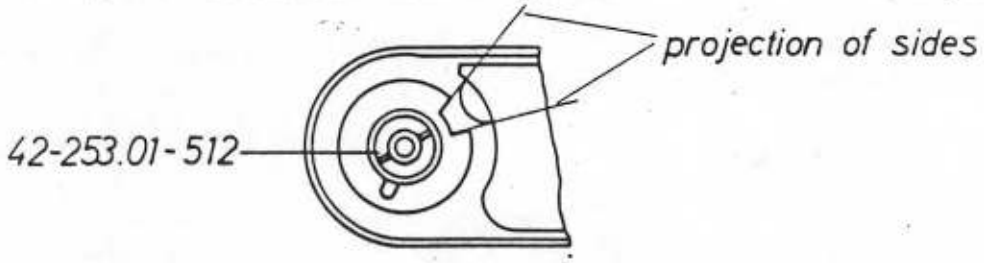

Fig. 104.1

Carefully place the drive shaft 01-855 in position. Move the stop lever 01-129 away from the positioning washer 01-30 while doing this, so that the stop lever 01-129 can engage the recess of the gear wheel on the drive shaft.

Screw the drive shaft in place with one screw M 2 x 3 LN 120 21. Release the shutter of the Leica from the release shaft 01-406. Tension the shutter by turning the film transport shaft from the open back of the camera. Check that the stop lever 01-129 has engaged the recess of the gear wheel, but keep the stop lever 01-129 and the lever 01-825 in their correct position against the positioning washers 01-30 and 01-824 (see sheet 21, fig. 30).

Fix the drive shaft with two further screws M 2 x 3 LN 120 21.
Check the operation with the lever 01-371 (tension and release several times).

Refit the cover plate (see sheets 1 and 2).

Check the operations of the camera.

Cleaning and Lubricating the Escapement

Sheet 71

Note

Dirt in the escapement mechanism can result in increased exposure times. The escapement must be cleaned in perfectly pure cleaning petrol, and lubricated only with the lubricants listed below.

Cleaners and Lubricants

1. Lead-free cleaning petrol
2. Medium No. 100
3. Lubricant No. 601 (△△△)
4. Lubricant No. 602 (◉◉◉)
5. Lubricant No. 704 (●●●)
6. Brush

Sequence of operations

Remove the escapement mechanism from the camera (see sheet 17).

Place the escapement mechanism for 15 minutes in a bath of cleaning petrol. Wind up the escapement several times while in this bath, and let it run down with the escapement anchor engaged.
Let the escapement mechanism dry out.
Apply the medium No. 100 drop by drop with a brush to all bearings and let it dry thoroughly.

Apply lubricant No. 602 to the two cups of the ratchet wheel bearings (see fig. 105.1).
Lubricate all other bearings lightly with lubricant No. 601.
The use of an OSAMA oil injector (scale setting 10) is recommended for this purpose.
Coat the contact rivet of the drive segment and the bent-down edge of the sliding member with lubricant No. 704 (see fig. 105.1).

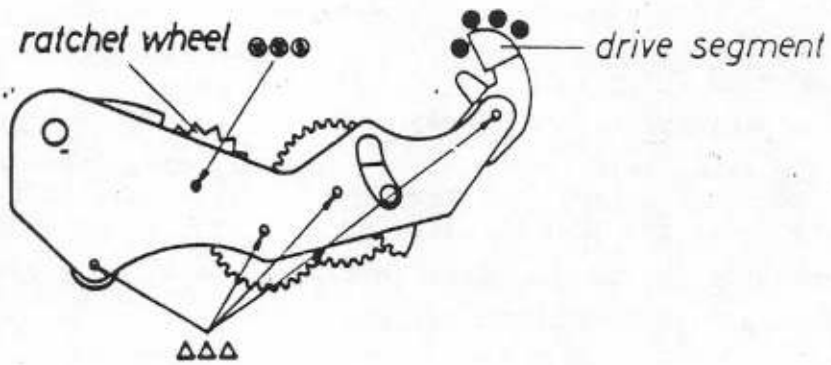

Fig. 105.1

Refit the escapement mechanism (see sheet 17).

Eliminating the Entrance of Stray Light into the Housing

Sheet 72

Tools and sundry requirements

1. Tweezers
2. Adhesive EC 880*
3. Strip of felt (2 x) 42-253.01-904

Note

These instructions are solely applicable to Leica cameras with hinged metal back.

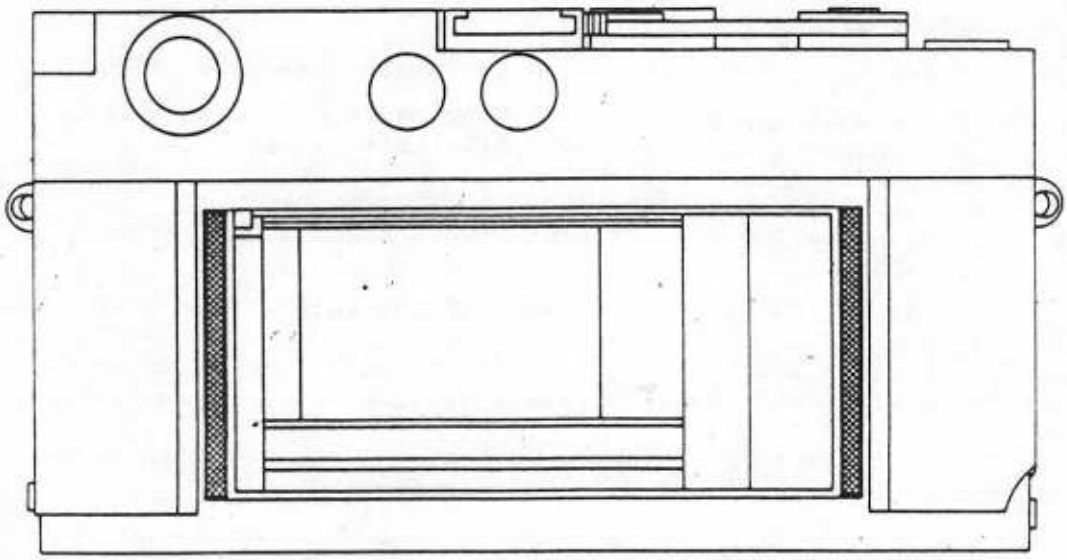

Fig. 106.1

Sequence of Operations

Take off baseplate and hinged back.

Place housing with lens mount on to a support. Stick in two strips of felt with adhesive EC 880 (see Fig. 106.1). Take care that the strips of felt fit snugly along the cast shoulder of the rectangular opening of the housing.

After hardening of the adhesive remove superfluous remnants of the adhesive.

Replace hinged back and baseplate.

*See instructions for using adhesives, sheet 5.1, Spare Parts List for the Leica M2.

Ernst Leitz G m b H Wetzlar	Servicing Instructions for the Leica M3 No. 700 001 to ...	42-253 Sheet 73.1

Main body / Light strip	Housing	Remarks
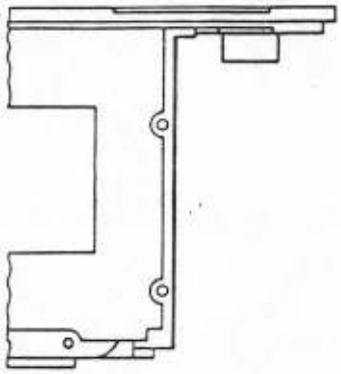	42-253.01-999 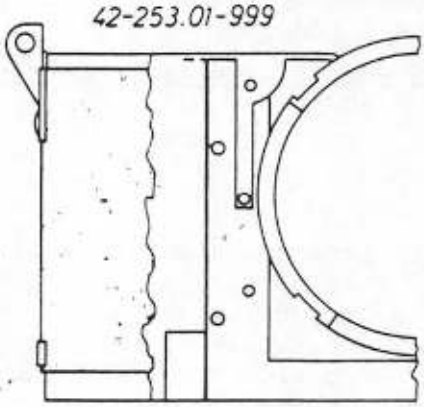	Main body can only be used with housing 42-253.01-999. Without light strip.
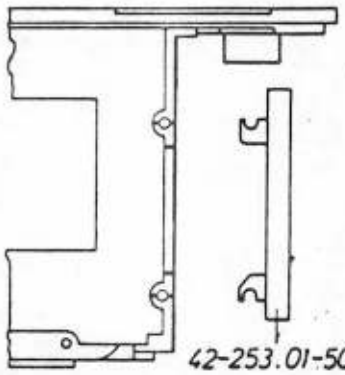 42-253.01-507	42-253.01-555* 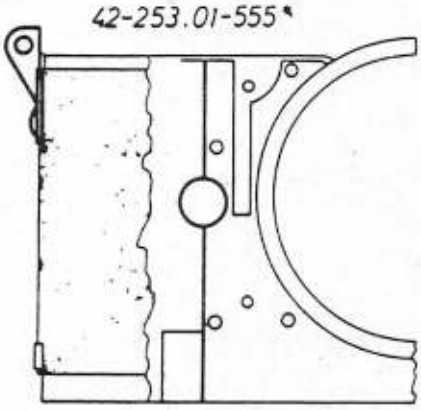	Main body with light strip 42-253.01-507 can also be used with housing 42-253.01-555. Main body with light strip 42-253.01-911 can also be used with housing 42-253.01-898.
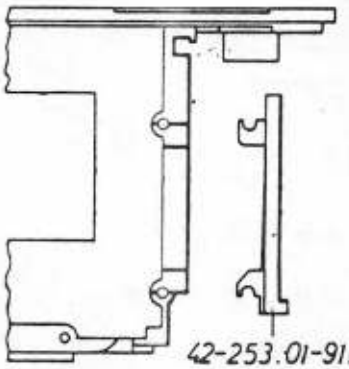 42-253.01-911	42-253.01-555 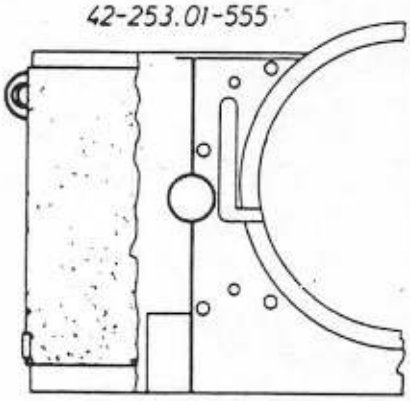	Main body with light strip 42-253.01-911 can also be used with housing 42-253.01-555* and 42-253.01-898.
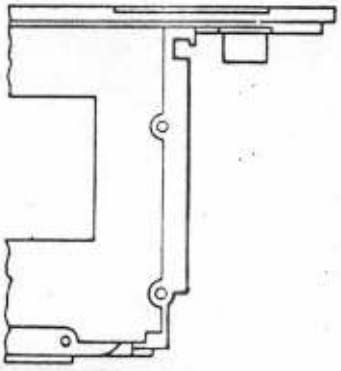	42-253.01-898 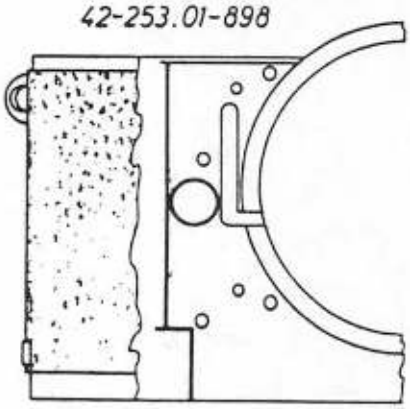	Main body can only be used with housing 42-253.01-898. Without light strip.

1.12.1961			

Alteration of housing 42-582.01-440 and 42-582.01-328 for use with cameras below serial No. 787 000

sheet 74

In order to simplify production and stock-keeping the housing 42-582.01-440 or 42-582.01-328 only is available from now on.
The main body for cameras below serial No. 787 000 has a protuberance in the casting which was used formerly for fastening the housing.
In case the housing 42-582.01-440 or 42-582.01-328 is to be used for these cameras, the following is necessary:

Drill hole according to Fig. 107.1 using a 1.6 mm spiral drill, bevel the hole and cut M2-thread.

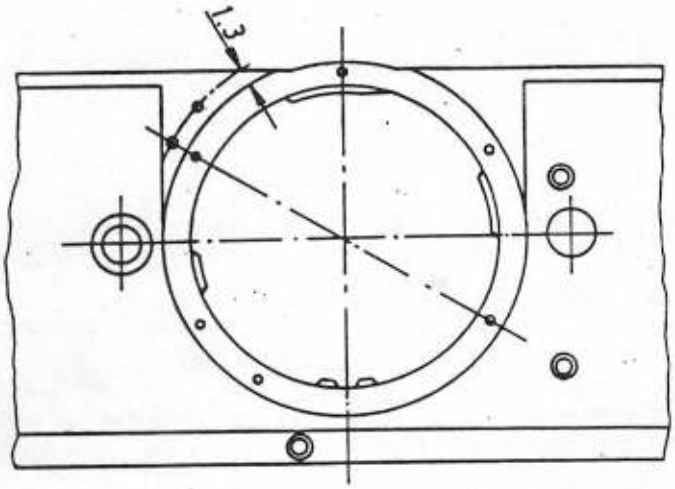

Fig. 107.1

Unscrew the screw 42-253.01-940 which is above the new thread hole and screw into new hole.
Close the old drill hole by screwing-in a thread pin M 2 x 2,5 DIN 551 and secure it with lacquer.

TECHNISCHER KUNDENDIENST

.66

Daniel D. Teoli Jr. Archival Collection