University of South-Eastern Norway

Faculty of Technology, Natural Sciences and Maritime Sciences

IIA4117 Model Predictive Control

Master

Author:
Bjørn Erik Ulveraker IIA;

12th March 2026

Table of Contents

1 Introduction **3**

2 Problem Definition **3**

2.1 Research Questions 4

3 Kladd **4**

4 Literature Review **5**

4.1 Serial Hybrid DC Shipboard Power System Architecture 5

4.1.1 Constraints 7

4.2 Hierarchical Control and Marine Power Management 7

4.3 State of the Art EMS 9

4.4 Objectives of EMS 9

4.5 Objectives 10

4.6 Diesel–Battery Interaction 10

4.7 Maritime rules and regulations 11

4.8 Rule-based Control Logic 11

4.8.1 Safety 13

4.9 Optimization 13

4.10 Types of otpimization 14

4.11 d 14

5 System Description **15**

5.1 Battery 15

5.2 Generators 15

5.3 Electrical Loads 16

5.4 DC-link architecture 16

5.5 Power Management System 17

5.6 Energy Management System 17

6 Methods and Implementation **18**

6.1 Data processing 18

6.2 Rule-Based Control Logic 18

6.2.1 Generator stasrt/stop 18

6.3 Modeling 19

6.4 Objective function 19

6.4.1 Power balance 19
6.4.2 Generator model 19
6.4.3 Battery Storage System 21
6.5 Optimization 22

7 Heuristical logic **23**

8 Modeling **23**
8.1 Optimization 23
8.2 Generators 23
8.3 Battery 23
8.4 Controller 23

9 Discussion **24**
9.1 Modeling 24

10 Conclusion **25**

Bibliography **25**

A Battery Datasheet **26**

B Generator Dataset **30**

1 Introduction

Stricter emission regulations and rising fuel costs have increased pressure to improve the energy efficiency of maritime vessels. In small and medium-sized work vessels, which often operate under highly variable load conditions, hybrid-electric power system have emerged as a practical solution to reduce fuel consumption and emissions[7].

Battery energy storage systems (BESS) have become more widely used in marine applications in recent years, mainly due to reduced costs and improved performance of lithium-ion batteries. These batteries offer several properties that are well suited for hybrid-electric power systems, including high efficiency, high energy density, and sufficient lifetime. In hybrid-electric vessels, BESS can supply or absorb rapid power fluctuations, allowing diesel generators to operate at more stable and efficient load levels. This load-smoothing capability is one of the main ways in which BESS can contribute to improved fuel efficiency[7]. In addition to the emission benefits, the use of BESS can also enable reduced engine operation during certain vessel modes. This might lead to improved onboard working conditions, such as lower noise level. However, these aspects are not considered in the scope of this work.

While hybrid diesel-electric power systems offer a more flexible and capable architecture compared to traditional diesel vessels, they are often operated using simple rule-based logic or direct operator control. These control strategies are typically designed with expert knowledge, to be robust, reliable and easy to understand [6]. Flere kilder?

However, even though these approaches are proven reliable, these approaches do not necessarily make the most efficient use of the available energy resources[6]. The interaction between generators and battery systems is commonly governed by fixed rules and thresholds, which are typically not derived from a systematic performance evaluation. As a result, it is difficult to clearly assess system performance or to determine whether alternative operating strategies could improve fuel consumption or generator usage. Flere kilder?

Optimization-based energy management strategies have been widely studied in hybrid energy systems, such as microgrids and hybrid electric power systems. These approaches often use multi-period optimization models to describe how generator operation and battery state of charge are coupled over time. By accounting for future system behavior through forecasts, these models are often used as reference solutions that represent how the system could be operated under ideal information [1].

The purpose of this thesis is not to replace rule-based control with optimization. Instead, the aim is to develop and formalize heuristic supervisory control rules for a hybrid-electric work vessel, and to study their behavior by comparing them with a multi-period optimization model under the same system constraints.

By comparing heuristic control strategies with an optimization-based reference, this work seeks to improve understanding of how commonly used control rules perform, where their main limitations lie, and how insights from optimization can be used to guide the design and tuning of practical supervisory control strategies.

2 Problem Definition

Diesel-electric serial hybrid service vessels that operates continuously over extended periods without reliance on frequent shore charging increasingly employ battery energy storage systems to enable flexible generator operation. In many practical installations, energy management is implemented using fixed, rule-based supervisory logic that prioritizes feasibility and robustness rather than performance optimization.

This thesis investigates the design and evaluation of a supervisory energy management strategy for a diesel-electric serial hybrid service vessel. The focus is placed on generator start/stop decisions and generator power setpoint control at the supervisory level. The primary objective is to improve

fuel efficiency relative to a baseline rule-based EMS, while respecting operational constraints on battery state of charge, power balance, and generator operating limits.

The proposed EMS is a heuristic, rule-based supervisory strategy. A multi-period optimization model is formulated offline and used as a reference to benchmark achievable performance under idealized information assumptions. This reference is not intended for real-time implementation but serves to evaluate the effectiveness and limitations of practical rule-based control strategies.

The scope of the study is limited to supervisory energy management and does not include real-time optimization, model predictive control, or component-level dynamic control. The EMS is evaluated for a single vessel architecture under predefined operational profiles.

2.1 Research Questions

This thesis addresses the following research questions:

1. How does the fuel consumption of a heuristic, rule-based supervisory energy management system compare to that of a multi-period optimization-based reference under identical operational constraints and load profiles?
2. Which generator start/stop and generator power setpoint control rules have the greatest influence on fuel efficiency in a diesel-electric serial hybrid vessel?
3. To what extent can insights from an optimization-based reference be used to improve the design and tuning of practical rule-based supervisory control strategies?

3 Kladd

Veldig veldig viktig del av beskrivelse er å unngå chatter/høyfrekvent start/stop av generator. Veldig viktig å predikere nær fremtidig bruk av kraft. Detta må verr sentral del av problemformulering

Cars is about simple thresholds for battery SOC and power consumption, with hysteresis. Vessels by comparison are: - Startup delay is long relative to disturbance timescale

4 Literature Review

Kanskje få inn noe på machine learning

The citation 16 gives a overview of DC architectures, and is heavily used in this study, but note that most research is done on larger classed vessels (trenge kilde) Få med kontrast: Paper 4 viser til ferje med repeterbar/forutsigbar rute. Forskjell på båt som er ute over lengre tid. Få med: Ganske mange nyvinninger innenfor power systems med Ultra capacitors, fuel cells etc. Mest utbredte er likevell batteriteknologi og generatorer implementert i DC arkitektur. BRa kilde her e 13 Må vise til power electronic converters(invertere, rectifiers) Få med at batteri er en passiv enhet Kanskej få med kontrast mellom optimisering av design og operasjon

This chapter presents a overview of relevant literauture for understanding a shipboard energy management system. This thesis aims at designing such a optimal control problem, so therefor it is important to understand the concept of shipboard integrated power systems(IPS), shipboard microgrids, the most important aspecs of the control problem, and how scheduling and optimization can be used to solve this.

The first part of the literature reivew is about common shipboard microgrid architectures. Then the next chapter is about these systems control system in different time domains. Then a overview of state of the art EMS is presented. Then optimization... etc etc

Framing: Få frem at PMS står for sikker og trygg operasjon, EMS står for ytelsesforbedring

4.1 Serial Hybrid DC Shipboard Power System Architecture

Your subsection should follow this logical progression:

1.Conventional AC IPS – structural constraints.

2. Emergence of DC-linked systems – architectural change.

3. Serial hybrid topology – electrical-only propulsion path.

4. Contrast with parallel and series-parallel hybrids.

5. Architectural implications for supervisory control.

6. High-level mention of reliability and certification constraints.

OR defend these:

AC IPS structurally couples generator speed to bus frequency.

DC systems remove frequency-based load-sharing constraints.

Serial hybrid topology eliminates mechanical propulsion coupling.

Power electronics introduce controllability but also converter limits.

Architectural decoupling changes supervisory scheduling possibilities.

Then ensure every paragraph supports one claim.

Få frem: Hybride systemer mye mer flexible enn konvensjonelle propulsion systemer Få frem: Propulsion motor absolutt største load) Må få frem at det absolutt mest utbredte er AC systemer Typical ESS: including battery, ultra-capacitor (UC), flywheel, and superconductors. Få frem: At DC distrobution er mer effektivt enn AC system(trenger kilder), DC system enables av fremskritt i power electronics, spesielt power electronic converters Kan få frem vinkling: DC distrobution mer effektivt enn AC, og pga fornybare energikilder som ofte er DC så blir det mye implementert i dag. Kanskje gi en oversikt over viktigste komponenter i systemet: Batteri, generator, inverter, motorer, propulsion motor, load

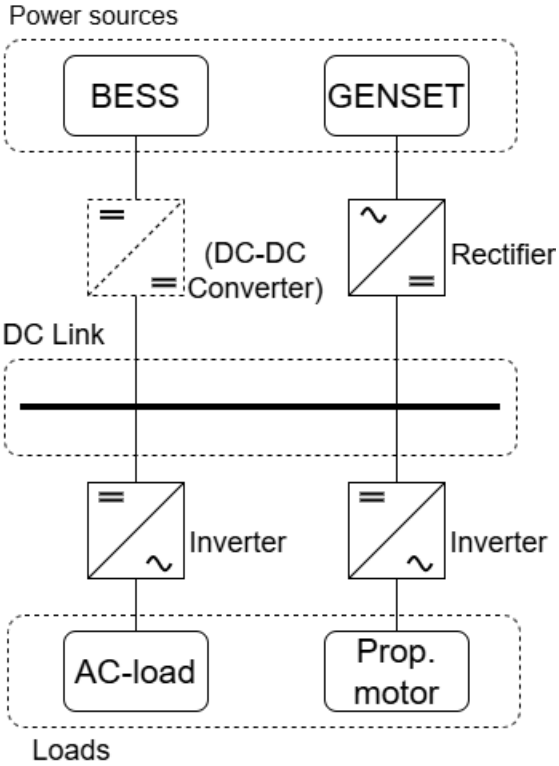

Figure 1: A simple illustration of the main components of a serial hybrid DC shipboard microgrid

Conventional shipboard integrated power systems (IPS) have used AC distribution, where diesel generators are directly connected to a common AC bus and operating at a fixed frequency(50/60Hz). In such systems, the generator speed is coupled to frequency, and generator and frequency regulation are important for stable operation, and synchronization is required before connecting generators to the AC network, [5, 13]. As a result generator control i constrained by requirement for frequency stability and load-sharing mechanisms, rather than optimization of engine operating points.

Muligens lag figur av enkel AC distrobution

By comparison, modern DC shippboard microgrids (DC-SMGs) use a commen DC distribution bus bar to connect power sources and consumers through power electronic converters. In these architectures diesel generators are connected to the bus through rectifiers, which decouples the generators from the frequency and phase constraints that has a dominant role in AC distrobution IPS[13], kanskje ([7]). Få med: Serie hybrid, floating DC link

Two main types of DC distrobution systems exist for hybrid vessel. Parallell hhybrids and serial hybrids, and a third combination serial parallell hybirds. Where in contrast to serial hybrids, the parallell hybrids has diesel generators that are mechanically coupled to a propulsion shaft, instead all propulsion and auxilliary loads are supplied electrically via the DC link [7].

In serial hybrid DC shipboard microgrids, Generators are decoupled from propulsion shaft speed and electrical phase synchronization constraints [7, 13]. This decoupling allows operation across a wider speed range, and allows the engine to be run well with its fuel oil consumption characteristics (SFOC)[5].

A simple illustration of what makes out such a serial hybrid DC shipboard microgrid is shown in Figure 1. Muligens lag figur på parallell distrobution for sammenlikning

For supervisory energy management, this leads to two fundamental differences compared to conventional AC-based systems, or parallell DC systems.

- Generator speed is not constrained by grid frequency, or shaft rotation, and may be controlled based on efficiency or operational factors.
- Generator connection to the bus does not require phase or frequency synchronization

The resulting generator control can then be formulated around energy balance, mechanical ramp-rate limits, and fuel efficiency objectives, rather than being constrained by frequency stability requirements.

Floating DC Link and Battery-Dominated Voltage Control

—

However, in recent times, due to new environmental regulations, and development in power electronics and energy storage solutions, DC-based architectures have become increasingly popular . DC shipboard microgrid architectures offers several benefits compared to AC ones.

This vessel has a hybrid DC shipboard integrated power system. From a systems perspective it can be named hybrid DC shipboard microgrid due to its multiple distributed energy sources and supervisory control structure. This is differing from traditional AC-based integrated power systems which allows

Skal bridges inn med neste kapittel.. Consequently, the supervisory control problem in serial hybrid DC shipboard systems can be formulated as an energy management problem governed by power balance, operational constraints, and efficiency considerations rather than frequency stability.

Få med: unipolar DC architecture Zonal vs radial architecture

4.1.1 Constraints

Må snakka om safety constraints, type batteri skal tåle at fremdriftsmotot tripper

Detta ska vekk:

The system level power balance of a serial hybrid DC link is fully electrical and can be expressed as:

$$P_{\text{gen}} + P_{\text{batt}} = P_{\text{load}}, \tag{1}$$

where P_{gen} denotes aggregated generator output, P_{batt} battery charge/discharge power, and P_{load} total vessel demand.

4.2 Hierarchical Control and Marine Power Management

Må få med: However, specific characteristics and challenges exist for SPSs, such as the presence of high dynamic loads (planned or unexpected pulse loads, large share of propulsion loads, fluctuated loads from the sea), the requirement of economical and environmental power sharing between the onboard gensets and ESSs, the various operating scenarios (regular cruising, full-speed sailing, docking, loading/unloading, and anchoring, etc.), and limited ship space for energy facilities installation

Shipboard power systems are often divided into a hierarchical structure, separating fast acting low-level power dynamics, from higher level supervisory decision making. In a converter-dominated DC shipboard systemsMå beskrive converters under hierarchy delkapittel, low-level controllers in the converter controls current, voltage and machine dynamics, ensuring stability and safe operation[5].

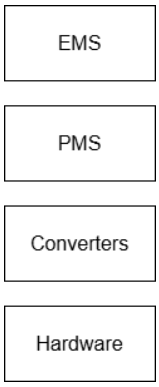

Figure 2: Caption

At the layer above, supervisory control manages the operation of generators and batteries. In the literature, this functionality is often referred to as a Power Management System (PMS), responsible for allocating power production among parallel sources so that the vessel's electrical demand is met, maintaining sufficient available generation and reserve capacity to prevent loss of power (blackout), monitoring system status, and issuing generator start and stop commands[5]. The PMS ensures secure and reliable coordination of the onboard power sources under varying load conditions.

The supervisory layer can be extended to include a Energy Management System (EMS), that introduces a optimization based longer term decision layer on top of the PMS. While the PMS focuses on operational reliability, the EMS determines the overall operating strategy of the available energy sources, with the aim of optimizing system performance with regards to component lifetime or energy efficiency [5].

Har egentlig ikje forklart optimization og EMS her. Et alternativ: Forklar primary-secondary her, og senere under "system description", eller annet sted forklar EMS - PMS arkitektur og sammenlikne med primary/secondary Kanskje finn ut: Om det finnes andre sources som backe optimisering som burde inn her

A similar hierarchical architecture is descriped in shipboard microgrid literature using terminology such as primary, secondary, and teriary control levels. Where the primary control is the lower level control, and tertiery control is the highest level, contorlling power dispatch and system-level coordination [3]. Even though terminology varies, a common principle is a layered structure where control authority and decision time scale increase with hierarchy level. Få med at primary secondary er ekstremt vanlig å bruke i power systems/microgrids

Based on this, hybrid marine dc systems can be understood as consisting of: Kan kanskje fjerna det her

1. A physical power system
2. Low-level converter and machine control
3. Supervisory power management
4. Higher-level energy optimization functions

Muligens lage figur med både primary secondary, og PMS/Converter.

Figure 2 shows the control hierarchy.

Må lage figur

Kan muligens heller bruke standard inndeling i kraftsystem, hvis det finnes: "initial response", "primary control", "tertiary control" etc..

The proposed EMS operates at the supervisory control level, but can implement elements from the scheduling/operational monitoring domain(implementeres det elementer fra scheduling/operational planning?)

4.3 State of the Art EMS

EMS can be said to operate at the supervisory control level, while implementing elements from the scheduling/operational plamnning level. A lot of literature has been conducted on this topic, a recent review gives a good overview [6]. As stated previously the purpose of the EMS is to provide a more optimal performance in regards to some defined objective.

There are generally three main categories of such a EMS-system [6]. The first and most common is a rule based EMS. Where thresholds and binary decisions are derived from expert knowledge and heuristics. A rule-based EMS can again be divided into deterministic logic and fuzzy logic. Where the deterministic logic is very simple control logic such as binary decisions based on thresholds, and fuzzy logic is slightly more advanced, with weighted decision makeing Need better explenation

In recent times algorithmic EMS such as optimization based control systems, and learning-based control systems has also become increasingly published, but with rarare implementations in a real system because of computational complexity, and non-deterministic solutions which might conflict with safety constrants and operational robustness (Need source).

Improving fuel efficiency while while maintaining a economic efficiency and operational safety will be the key goal of this EMS system.

Kopi fra artikkel: Consequently, enhancing economic efficiency and reducing emissions while achieving the safe operation of hybrid ships have emerged as central themes in this research area.

There are two main classes of EMS systems: 1. rule-based EMS and 2. Algorithmic controllers.

Two main approaches: System-level design (propulsion topology, energy storage sizing, capacity configuration), and

Operational EMS (real-time or supervisory control deciding generator loading, battery usage, power split).

Snakk om objectives: Emission reduction, maintenance/wear reduction, economi reduction, performance

Rule-based, optimization based, learning based. Rule-based, two main types: deterministic and fuzzy. Deterministic control logic is simple and robust, but these simple rules in a highly diverse shipboard system might provide poor optimization performance and a non-optimal solution.

Battery defining power budget: Only applicable if the total load is lower than the battery power budget

Kan inkludere EMS fra: Båter, microgrid, biler

4.4 Objectives of EMS

Forslag: Fuel efficiency, economic efficiency, operational safety, wear and tear reduction

Også få med: Forskjell på short path route planning for fartøy med repeterende driftsmønster

Explanation of SFOC: Specific Fuel Oil consumption (SFOC) expressess fuel mass per unit electrical energy output, and varies with generator load. Typically gensets are less efficient at lower loads. There is typically also a higher mechanical wear at lower loads. Husk kilder.

4.5 Objectives

Increased fuel efficiency, reduced component wear,

4.6 Diesel–Battery Interaction

Må få frem: Generator start/stop og chattering er et av hovedproblemene (muligens paper 21 har en statement på dette, inkludert bruk av startup cost

In serial hybrid DC shipboard power systems, diesel generators and BESSs are coupled through a common DC link, and their physical charateristics fundamentally shape supervisory control formulation. In DC distrobution systems, synchronization between generator frequency and bus frequency is not required. This removes the fixed frequency constraints that exists in conventional AC systems and allows the diesel generator to operate at more flexible speeds [4]. Several studies describe this as an important advantage of DC hybrid architectures. Kanskje legg inn ein kilde på akkuratt denna uttalelsen?

Diesel generator efficiency in literature is often represented using load-dependent specific fuel oil consumption(SFOC) or specific fuel consumption (SFC) curves [4, 9]. These curves show that fuel consumption per kWh increases at low load levels (Mitt SFOC plot vise at høyere generatorpådrag også er ueffektivt.). For this reason, hybrid systems often use the BESS to handle low power demand or fast load variations, so that the diesel generators can operate closer to more efficient load regions [4]. Because SFC curves are nonlinear, optimization-based energy management strategies commonly approximate them using linear or piecewise linear models (kanskje fjerna?)[9].

In addition to efficiency considerations, practical implementations must prevent excessive generator start/stop cycling. Frequent speed variation or repeated start/stop actions may increase mechanical wear and reduce lifetime [14]. Therefore, optimization-based formulations typically include generator operation time and start-up constraints to avoid unrealistic commitment chattering [12].

Even though DC systems allow more flexible generator speed operation, supervisory control studies still represent diesel generators with practical operating constraints. Optimization-based power and energy management formulations include generator commitment decisions and loading limits to ensure realistic operation [9, 12]. This shows that generator behaviour cannot be adjusted freely and must respect physical and operational boundaries.

BESS introduces another different type of constraint. The SoC changes over time depending on charging and discharging actions and must remain within defined limits [9]. A hybrid ferry study shows that the battery can smooth load fluctuations and improve overall fuel efficiency by reducing inefficient diesel operation[4]. Because SoC depends on previous decisions, supervisory control problems are often formulated over multiple time steps rather than as single-step power allocation problems (hmm knaksje litt tidlig å begynna å se optimization problem her?[12].

The interaction between diesel efficiency characteristics, DC frequency decoupling, and battery SoC dynamics creates the main coordination problem addressed in hybrid ship energy management research [9, 12, 13](Detta e ein litt sterk statement, nødt te å mjuka ann opp ELLER flytta ann te oppgavebeskrivelse). In the literature, this interaction is treated as a constrained scheduling problem where generator loading, commitment, and battery power must be coordinated to improve fuel efficiency while maintaining feasible operation[9, 12]. Må gå over kildene her pgså, kanskje jeg kan klare å finne sterkere kilder.

Variable Speed Generator Wear

Diesel generator efficiency and durability are highly dependent on the on the operating torque/speed region. Conventional fixed-speed gneerators are typically designed to operate newar nominal conditions, and several studies report that diesel engined achieve their highest efficiency when supplying

approximately 70-80& of rated load. Low load operation is associated with lower fuel efficiency and increased risk of engine degradation[8].

Variable-speed operation enables adjustment of engine speed in order to maintain operation at a more optimal fuel efficiency region, and a study shows that the lowest SFOC is occouring around 70% of nominal torque, with speed adjusted to satisfy power demand [10](Finn ut om detta stemme for Volvo D13 generator). However, measurements also show that reducing engine speed into lower RPM ranges may increase vibration levels due to structural resonance, which can introduce additional mechanical stress[10].

Spørsmål: Hvor mye øker hurtig økning av generator load / turtall / speed slitasje. Hvor mye kan man spare med fixed load? Undersøk i literaturen Få med: Batterier får økt slitasje av store og hurtige energisvingninger (må finne kilde)

Få med: Battery eats higher frequency power oscillations (peak shaving)

4.7 Maritime rules and regulations

Kan snakke om: Blackout prevention som er viktig historisk sett. Nyere versjon som blir blackout prevention i henhold til batteriene.

4.8 Rule-based Control Logic

Hmm kanskje putte inn: Hvis batteri når 20%, og generator ikke produserer nok for å lade batteri og bruke propulsion, da må propulsion effekt økes. Men da burde det være en varsling i HMI om at en kjører ueffektivt.

Detta kapittelet e egentlig objectives tror eg

Få med tydelig: Dette handler ikke om droop basert spenning/strøm styring. Dette er supervisory layer

Det som e skreve mest om her e egentlig objectives of EMS

Må snakke om deterministic rule based logic vs fuzzy logic

Kanskje skriv: Focusing too hard on the optimization on one energy source, can increase the degradation and decrease the performance of another

Existing PMS/EMS strategies for shipboard power systems are generally categorized into rule-based and optimization-based approaches [12]. Rule-based strategies rely on predefined operational logic and expert knowledge and are characterized by limited computational requirements and straightforward implementation [12]. In contrast, optimization-based approaches formulate the energy management problem as a constrained optimization problem and aim to minimize fuel consumption or operating cost [9].

There is no official survey on this, but it is assumed that most systems in industry are rule-based, and derived from expert knowledge(Ein bra kilde her e faktisk 13, 28 e også bra kilde på detta). Because of simple implementation and robustness Legg inn kilde.

Rule-based methods are not as exciting in research and there is no consensus on the best practice of such rules Trenge eg kilde??. Not many studies formalizes such simple threshold based rule-based logic Trenge kilde?. There does exist some papers which formalizes and describes such simple threshold based rule-based logic for EMS on ships like Xians work in [9] Hmmm tror detta e feil paper, ska verr paper 4.

Battery constraints

Er også andre måter å hjelpe å beskytte batterier på, som å begrense strøm/effekt. Men disse er mer avanserte enn SoC begrensing og vil komme i direkte konflikt med generator optimalisering/bruk av batteri. Dette er noe som kan diskuteres

Hmm med tanke på batterihelse. Nåværende strategi er maks effekt på begge generatorer. En alternativ strategi kan være å feks kjøre en stk generator, for å minske batteri power ut. Kan muligens øke levetid på batteri? Må isåfall finne kilde og måte å få kvantifisert på

One important part of the ships EMS is conserving the components. For batteries the state of charge (SoC) lever is an important variable to maintain, in order to preserve health and longevity of the batteries, as too high or too low SoC can negatively affect the cell chemistry [6]. There is therefore often defined SoC limits as shown in Equation 2, that defines the operational SoC threshold of the batteries [4, 6]. Kanskje formulera detta på ein annen måte, spør chatten

$$SoC_{min} \quad \bigwedge \quad SoC_{max} \tag{2}$$

Typical values are $SoC_{min} = 20\% - 40\%$ and $SoC_{max} = 80\% - 90\%$ (trenge kilde, artikkel 13 seie 30%-90%SoC.).

Another potential battery conservation strategy is to minimize the transient power needs/oscillations and also to minimize the peak current/power output(trenger i så fall kilde på dette). This might be conflicting with generator conservation

Generator conservation

As described in 4.6, the optimal generator power is $P_{gen} = 70\% - 80\%$ (Hva er optimal speed og torque ut i fra dette?, both in terms of fuel efficiency and minimizing generator wear.

Kan me nevna hysterese eller start/stop cost her. Er det noen som har håndtert generator chatter i literaturen?

Generator fuel efficiency

The optimal fuel efficiency from Datasheet has been reported at 310kWe, with a speed of 1400rpm.

Run generators at optimal fuel efficiency

Kan si: Fra artikkel 5: The SFC/SFOC i a higly complex nonlinear function, with a big variation from low to high load. Hidden variables, vendor secrets(harkje kilder på det sista her). Can be hard to estimate.

Fra chaptgpt: -288 and 310 kWe have identical reported minimum SFOC at 1400 rpm in the datasheet. - 310 kWe is selected as the nominal stretpoint to maximize available generation headroom at the same SFOC point, reducing the probability that the battery must cover short peaks when gensets are online. -This is a heuristic; the net fuel impact depends on duty cycle and on/off cycling.

Ein veldig bra thesis focus: lavere effekt på 286kW, eller høyere effekt på 310kW. Høy effekt fører til flere charge/discharge cycles. Hva er best? Eventuelt: Variabel effekt vs statisk effekt. Type effekt som tilsvarer generatorbruk.

Ekstra generator regel

Når batteri ¿90%, men load over det som batteri kan levere (egentlig aldri lol? Med mindre batteristrenger detter ut?) Ok faktisk, hvis load er høy nok, over nok tid. Bør en da starte opp generatorer?

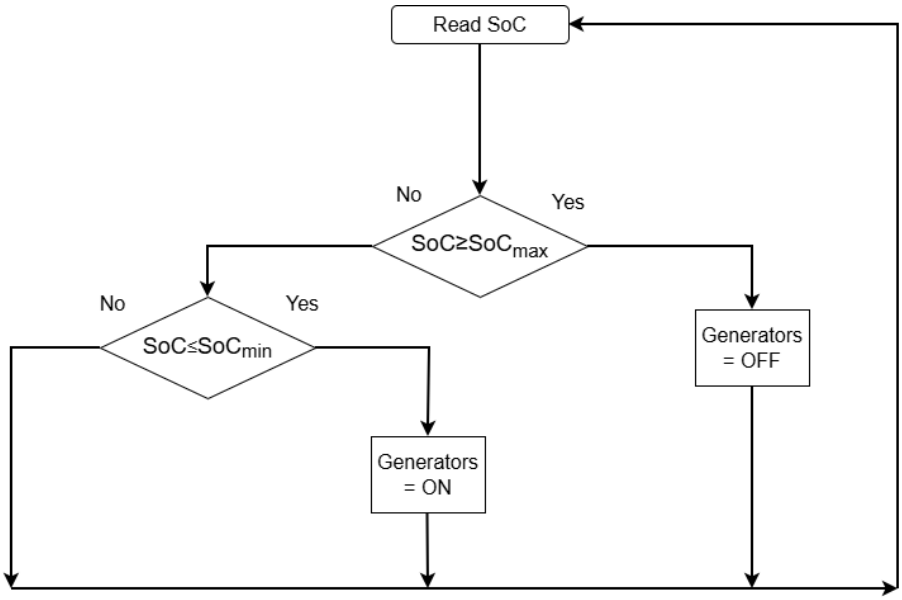

Figure 3: Caption

For å minske tid av batteri degredation. Hvis ikke så må ihvertfall dette justifies Ok annen case: Hva hvis batteri ¡30% og prupulsion drar mer enn generator klarer å levere -¿ . -¿ Detta e faktisk ganske viktig. Ein mulig approach e Eco modus: Reduser totalt kraftbudsjett med en viss prosent. Slik at batteri får et kraftoverskudd. Kan eventuel også ha en performance modus: Der generator øke kraftbudsjett fra optimalt punkt og opp til maks.

Ship performance

It is important that the ship system is corresponding to ship performance requirements. Like that the generated power equals the demanded load $P_{gen} + P_{batt} = P_{load}$ Source?.

Nevne blackout events? kanskje si at dette vvar mye fokus på i AC systemer. Men at nå er det viktigere å skjerme batteriene ved svikt.

Tror eg bør skriva om path planning. Antall km til x, antall kilometer til y. Forsøke å nå Havn med tomt batteri, og arbeid med fullt batteri

4.8.1 Safety

Power budgets etc, kanskje egentlig håndtert av PMS og ikke relevant for EMS?

Her kan en referere til artikkel 4, A. Rule-based (RB) strategy. A difference to the approach here is that the intended ship does not have [4]

Redusere oppvarmings tid hvis generator er varm, dette er key

4.9 Optimization

Få med at slike metoder ofte ikke er implementert, pga determinisme, og computational demands, kan kreve ekstern datamasking. Men at det i dette tilfellet så er det fullt realiserbart.

Kan skrive at fokus kan våre både design, rute optimalisering og real time optimalisering(control)

4.10 Types of otpimization

Linear Programming

MILP

4.11 d

5 System Description

Må gi en oversikt over type vessel. Driftsmønster. 24/7 operation. Etc.

The vessel is a 24 meter (? må finna ut) service vessel, used to service fishfarms. It is designed to be deployed all over norway for longer periods of time, and to be able to offer 24/7 operation. And in contrast to smaller vessels(røkterbåt in the industry, the routes are long and non predictable. This rules out path planning, and optimizing charging from shore.

Series hybrid type

5.1 Battery

Få med: Batteri er på 144A max discharge, og 115A max charge

Få tydelig med: Flytende DC bus, ingen inverter mellom bus og batteri. Skiller seg ut fra majoriteten av literaturen (?)

The vessel is equipped with ten high-voltage lithium-ion battery packs supplied by Akasol (GEN 3 series). Each battery pack has a nominal energy capacity of 94kWh and a nominal DC voltage of 655V, with an operating voltage range from 560V to 756V. The batteries are rated for maximum 144A continous discharge current and 115A continous charging current. The batteries are liquid cooled and designed for high continuous power operation.

At the physical level, the vessel is equipped with ten identical battery packs arranged in two identical groups of five packs, each group connected in parallel to the DC link. However, from the supervisory control perspective, the battery installation is treated as a single aggregated energy storage system. Each battery string is protected by a 125 A fuse between the pack and the DC link, and each 5-string battery group feeder is protected by a 600 A fuse. The two physical groups are operated in parallel and are not dispatched independently. Consequently, the battery system is modeled using a single state of charge and aggregated power and energy limits.

Directly connected to dc link, Floating DC-link, purely passive component Få med noe ala: "We do not directly control battery current; battery current results from bus voltage dynamics. The supervisory controller must keep operation within battery and protection limits; fuses provide last-resort hardware protection."

Table 1: Battery system specifications

Parameter	Value
Nominal energy	940 kWh
Nominal voltage	655 V
Operating voltage range	560–756 V
Continuous charge current	1150A battery limit
Continuous discharge current	1440A battery limit, 1200A system limit

5.2 Generators

Spørsmål, trenger generatorer mye ramp up/down tid?

The vessel is equipped with two variable-speed diesel generator sets supplying electrical power to the DC-link. Each generator set consists of a diesel engine mechanically coupled to a permanent-magnet synchronous generator, with electrical power interfaced to the DC bus through an inverter.

The generator set operates over a wide engine speed range, approximately 600–1800 rpm. Electrical frequency is fully decoupled from engine speed by the converter, allowing the engine operating point to be selected based on load demand and fuel efficiency rather than fixed-speed operation.

At the supervisory control level considered in this work, the generator set is commanded through electrical power setpoints. Internal control systems regulate engine speed and torque to achieve the requested power output. Detailed electrical, electromagnetic, and engine dynamics are assumed to be significantly faster than the supervisory time scale and are therefore neglected.

The generator set is modeled as a controllable electrical power source subject to minimum and maximum power limits and a nonlinear fuel consumption characteristic. Prolonged operation at low load levels is avoided due to reduced efficiency and engine wear considerations. Fast power transients are assumed to be handled primarily by the battery system.

Husk å skrive inn 40% minstegrense fra Prated, referer til datasheet

Prøv å få info på: Start/stop cost (emissions, maintenance) Start/stop time More detailed SFOC

Table 2: Diesel generator set parameters used for system-level modeling

Parameter	**Symbol**	**Value / Description**
Electrical rated power	$P_{\mathrm{DG}}^{\max}$	385 $\mathrm{kW_e}$
Minimum recommended load	$P_{\mathrm{DG}}^{\min}$	0.3–0.4 $P_{\mathrm{DG}}^{\max}$
Engine speed range	n	600–1800 rpm
Control variable (supervisory level)	–	Electrical power setpoint
Peak efficiency (indicative)	–	$\approx$ 190 g/kWh
Generator efficiency	η_{gen}	0.95–0.97 (PM machine) (likely not needed)
Ramp-rate limits	–	Not explicitly modeled

5.3 Electrical Loads

The electrical consumers consist of propulsion motors, auxiliary machinery, hotel load, and shore connection. For modeling and supervisory control purposes, these loads are treated as power demands imposed on the DC-link.

The main propulsion system consists of port and starboard propulsion motors, each rated at approximately 350 kW. These loads represent the dominant continuous power demand during vessel transit and are commanded by operator thrust requests.

Auxiliary loads include bow and stern thrusters rated at approximately 130 kW each, as well as two hydraulic power unit (HPU) motors rated at 64 kW each. These loads are characterized by intermittent operation and high peak power demand, and may cause significant short-term variations in DC-link power balance.

A dedicated inverter supplies a hotel load of approximately 50 kW, representing general service and accommodation loads. In addition, the system includes a shore connection rated at approximately 85 kW, which enables battery charging when the vessel is connected to shore power while in port.

5.4 DC-link architecture

The vessel power system is structured around a common DC-link that interconnects all power sources and consumers. The diesel generator sets, battery energy storage system, propulsion drives, auxiliary loads, hotel load, and shore connection are all interfaced to this DC bus through power electronic converters. This architecture enables flexible power flow between components and decouples generator operation from instantaneous load variations.

The DC-link acts as the electrical coupling point of the system. In practice, making sure the power produced corresponds to the load demand.

As discussed in the sections about the battery and the generator there two main ways to control the power balance, where the first is ramping of the generators. In this system this is a slow response. The other way is the batteries passively adjusting for any power deviation, either absorbing excess

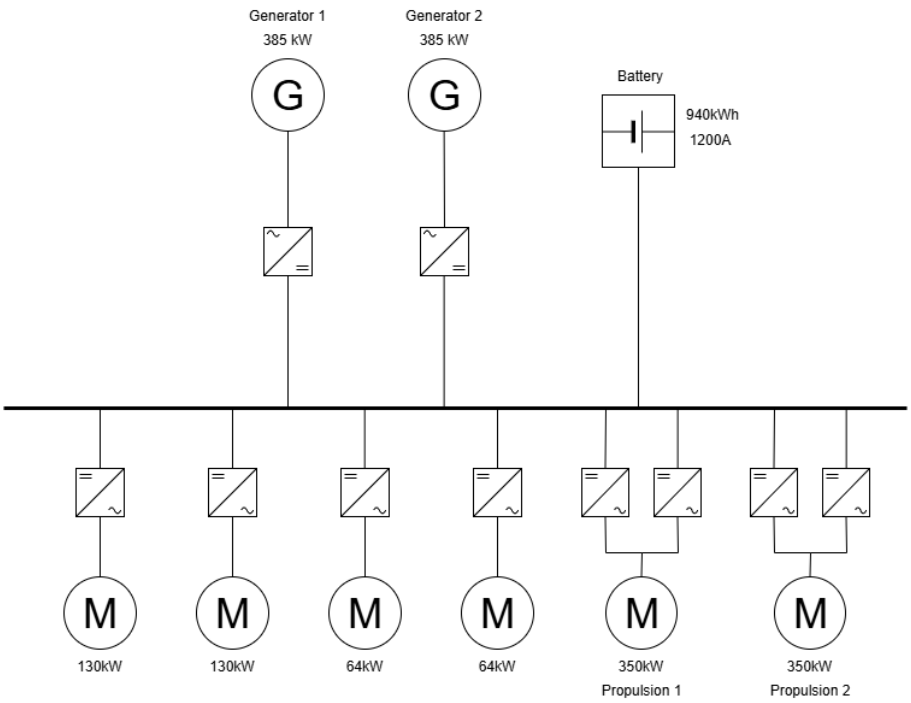

Figure 4: System Diagram

power or dispatching power deificits. Effectively enabling peak shaving, and allowing more smooth control of the generators, at the optimal setpoint.

From a system-level perspective, the DC-link therefore defines the domain in which power flows, constraints, and losses are evaluated.

A system diagram is shown in Figure 4. Note that battery power rating = 10*146A*650V/1000 = 949kW

Må få frem SERIE hybrid, ikke parallell

5.5 Power Management System

The Power Management System (PMS) ensures safe and reliable operation of the DC-linked power system by enforcing power balance and predefined power limits on all connected sources and loads. For a given operating mode, the PMS continuously ensures that propulsion and auxiliary loads do not exceed their assigned power budgets, and by that preventing violations of system and equipment constraints.

5.6 Energy Management System

In the current vessel implementation, the Energy Management System (EMS) is a supervisory, operator-driven layer responsible for selecting predefined operating modes. Each operating mode corresponds to a fixed configuration of power budgets that prioritizes different consumers.

For example, in transit mode a larger share of the available power budget is allocated to propulsion, whereas in work mode propulsion power is limited in favor of auxiliary or mission-critical equipment. The EMS does not perform real-time power allocation or optimization, but solely determines which predefined budget configuration is active.

EMS handler egentlig om hvor vi henter power, generator eller batteri

6 Methods and Implementation

This chapter presents the methods implemented in order to produce the results shown in chpt ..

Må snakke om rute optimisering, ikke det vi driver med her.

Ok bør faktisk sammenlikne kraftbudsjett. Om propulsion effekt bør samsvare med det som genereres av DGs eller ikke. Dette blir definert i power constraint. Må så jævli sammenlikna med paper 4

6.1 Data processing

6.2 Rule-Based Control Logic

FOr detta systemet som e ganske balansert: Trenge egentlig bare Soc constraint, power budget = batteri budget og generator setpoint. MEN detta vil bli ugyldig med ein gong me miste ein batteristreng for då vil power budget bli for lavt, OG me vil kje ha blackout safety. MEN denna her veldig enkle e faktisk mvp.

Kan formulere det slik: In a well balanced system, where the batteries has large enough capacity to supply the propulsion motors a simple system with battery constraints, power budget and generator operation would actually be sufficient. However this breaks once you lose one or more battery strings, both regarding operational quality AND security constraints. In not so well balanced systems, where the propulsion motors might be larger than the battery capacity, this is also not good enough.

This subsection covers the dervived control logic.

Battery constraints

A SoC constraint according to what has been described in 4.8 has been implemented.

$$SoC_{min} \leq SoC \leq SoC_{max}$$

Where $SoC_{min} = 30\%$ and $SoC_{max} = 90\%$.

Power budget

The power budget has been set to the nominal battery power $P_{max} = 655V * 115A \approx 750kW$. This makes sure that if the propultion motor should fail. Then the battery can handle the current without ruining contactor boxes. Trenge kanskje kje å ha detta med med mindre det blir god tid.

Kanskje skriv om blackout safety her Hvis eg ska ha dynamisk power budget mtp. antall strings. Så er jeg nødt til å tegne antall string inn i system description

Generator setpoint

In order to maintain a good balance between fuel efficiency and generator wear, and considering that it is very hard to determine the exact balance. It has been determined to run the generator at its peak efficiency of 310kWe and 1400rpm, which is peak efficiency according to the datasheet shown in B.

6.2.1 Generator stasrt/stop

The generator starts at lower soc limit and stops at higher soc limit

Regler for å starte generator 1, og generator 2? Tror egenlig ikke vi trenger. Siden vi ønsker max effekt for å lade opp batteri Regler for å rotere på generatorer?

When supplied power is not enough

Fuck I also need to actually limit propulsion if battery SoC ¡30% AND propulsion¿ 620kW (2 generators max capacity)

Dette er tydlig konflikt mellom SFOC og operasjon

6.3 Modeling

6.4 Objective function

TBA

6.4.1 Power balance

Batterier trekker overskuddstrøm, "Batteries is a passive component".

Model heavily inspired by the works of 29 and 5(?)

At each time step k, the total generated and discharged power must satisfy the vessel load and any battery charging power. The power balance is written as Sjekk at notasjon e consistent. Kan kanskje fjerne separat charge og discharge variabel for batteri

$$\sum_{i \in \mathcal{G}} P_{G,i,k} + P_k^{dis} = P_{L,k} + P_k^{ch}, \qquad \forall k$$

where $P_{G,i,k}$ [kW] is the power produced by generator i, P_k^{dis} [kW] is the battery discharging power, P_k^{ch} [kW] is the battery charging power, and $P_{L,k}$ [kW] is the total load demand at time step k.

This constraint ensures that the electrical demand is satisfied at every time step. If the generated power exceeds the load demand, the surplus power can be absorbed by the battery through charging. Conversely, if the generated power is insufficient to meet the load, the battery may discharge to supply the deficit (Hmm, detta burde kanskje stå beskreve under battery? usikker). Legg inn kilde, tippe 5 og 29 ska verr bra

For simplicity, converter and distribution losses are neglected, such that the balance is enforced on the system power level.

6.4.2 Generator model

En for for generator wear model, penalty for å kjøre på rare turtal/torque. Må eventuel ha med turtall og torque som en del av optimaliseringsmodellen

Eventuelle ting å legge til i generator model: Min up/down - time,
generator ramp limits,
start/stop variable (includes start up cost etc)
Litt dyrere bruk av den ene generatoren enn den andre.

Fuel Consumption model

The fuel consumption of each diesel generator is modeled using a piecewise-linear approximation of the specific fuel oil consumption (SFOC) curve based on manufacturer data. The available operating points are shown in Fig. 5. Since the SFOC curve is nonlinear, it cannot be directly used in a mixed-integer linear programming MILP formulation. Therefore, a piecewise-linear representation is implemented, which is often used in optimization-based energy management systems for hybrid ship power systems [9].

Let $i \in \mathcal{I} = \{1, \ldots, I\}$ denote the index of the SFOC breakpoints derived from the manufacturer data. Each breakpoint is defined by the pair $(P_i^{\mathrm{bp}}, \mathrm{SFOC}_i)$(Må forklara), where P_i^{bp} [kW] is the generator power and SFOC_i [g/kWh] is the corresponding specific fuel oil consumption. The fuel mass flow at each breakpoint is calculated as E det rett å regna ut fuel flow direkte te å begynna med?

$$\dot{m}_i^{\mathrm{bp}} = \frac{P_i^{\mathrm{bp}} \, \mathrm{SFOC}_i}{1000}. \tag{3}$$

The generator operating point is expressed using convex-combination weights $\lambda_{g,i}$:

$$\sum_{i \in \mathcal{I}} \lambda_{g,i} = u_g, \tag{4}$$

$$P_g = \sum_{i \in \mathcal{I}} P_i^{\mathrm{bp}} \lambda_{g,i}, \tag{5}$$

$$\dot{m}_g = \sum_{i \in \mathcal{I}} \dot{m}_i^{\mathrm{bp}} \lambda_{g,i}, \tag{6}$$

where $u_g \in \{0, 1\}$ is the unit commitment variable for generator g. When $u_g = 0$, the generator is off and both power output and fuel consumption are zero. When $u_g = 1$, the operating point lies on the piecewise-linear approximation of the SFOC curve.

To ensure that interpolation occurs only between adjacent breakpoints, the convex-combination weights are defined as a Special Ordered Set of type 2 (SOS2). An SOS2 constraint restricts an ordered set of variables such that at most two adjacent variables may take non-zero values, thereby ensuring that the generator operating point lies on a single segment of the piecewise-linear SFOC approximation [11, Sec. 9.3].

Generator Commitment Variable

Hmm e detta feil overskrift å bruka?

Bruk u som on/off variable The on/off status of each generator is modeled using a binary decision variable. Let

$$z_{i,k} \in \{0, 1\}$$

represent the operational state of generator i at time step k. If $z_{i,k} = 1$, the generator is running, while $z_{i,k} = 0$ means that the generator is turned off. (Hmm kanskje mulig å forenkle forklaringen, jaja kan se på dette senere)

This variable links the generator power output to its operating state. When the generator is on, the power output must remain within its minimum and maximum limits. When the generator is

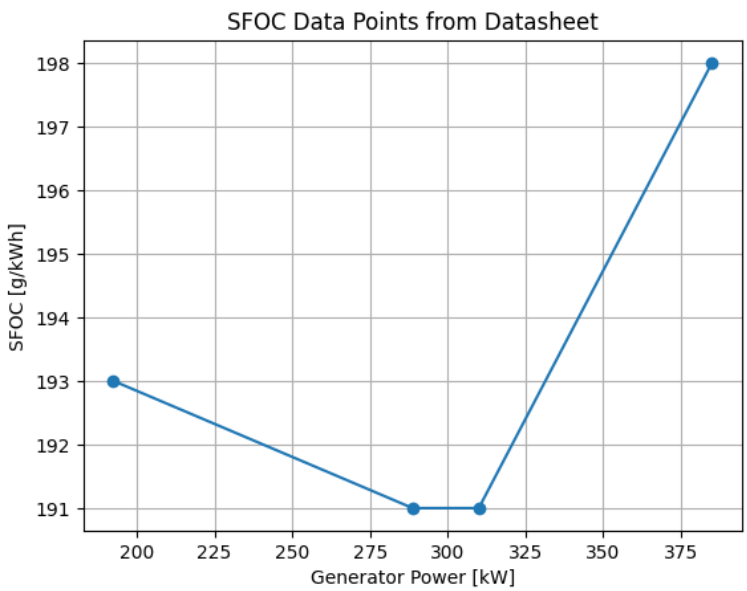

Figure 5: Husk å legge inn referanse i teksten

off, the power output must be zero. This is enforced using the following constraints:

$$P_{G,i,k} \leq P_{G,i}^{\max} z_{i,k}, \qquad \forall i, k$$
$$P_{G,i,k} \geq P_{G,i}^{\min} z_{i,k}, \qquad \forall i, k$$

where $P_{G,i,k}$ is the power produced by generator i at time step k, and $P_{G,i}^{\min}$ and $P_{G,i}^{\max}$ are the minimum and maximum power limits of the generator.

These constraints ensure that the generator can only produce power when it is turned on. Similar binary commitment variables are commonly used in mixed-integer optimization models for generator scheduling and power management systems. [2] Ska eg sei similar?

6.4.3 Battery Storage System

The battery energy storage system (BESS) is modeled using a linear energy balance and charging/discharging power constraints within a mixed-integer linear programming (MILP) framework, similar to formulations commonly used in shipboard energy management studies [2, 9].

The stored energy of the battery at time step k is denoted by E_k [kWh]. Charging and discharging power are represented by the decision variables P_k^{ch} [kW] and P_k^{dis} [kW], respectively. A binary decision variable u_k is introduced to represent the operating mode of the battery.

The stored energy is constrained by the minimum and maximum energy limits (Må endra notasjon her)

$$\underline{E} \leq E_k \leq \bar{E}, \quad \forall k \tag{7}$$

where $\underline{E}$ and $\bar{E}$ denote the minimum and maximum allowable stored energy of the battery.

The charging power is limited by the maximum charging capability Detta kan kanskje fjernas

$$0 \leq P_k^{ch} \leq \bar{P}^{ch} u_k, \quad \forall k \tag{8}$$

and the discharging power is constrained by

$$0 \leq P_k^{dis} \leq \bar{P}^{dis}(1 - u_k), \quad \forall k \tag{9}$$

where $\bar{P}^{ch}$ and $\bar{P}^{dis}$ denote the maximum charging and discharging power limits of the battery.

The evolution of the stored energy is described by the energy balance equation (MÅ legga inn link)

$$E_{k+1} = E_k + \Delta t \left(\eta^{ch} P_k^{ch} - \frac{1}{\eta^{dis}} P_k^{dis} \right), \quad \forall k \tag{10}$$

where η^{ch} and η^{dis} denote the charging and discharging efficiencies of the battery and Δt represents the duration of each time step.

The binary decision variable

$$u_k \in \{0, 1\} \tag{11}$$

ensures that the battery cannot charge and discharge simultaneously within the same time step.

Kan kanskje fjerne binary decision variabel her. Muligens

Finally, the initial stored energy is defined as

$$E_1 = E_0 \tag{12}$$

where E_0 represents the initial energy level of the battery.

6.5 Optimization

Julia using JumP

Solved with HiGHS solver

7 Heuristical logic

Are you designing:

A) Fixed-speed, load-following genset? B) Fixed-speed, constant-power genset with battery buffering? C) Variable-speed, optimized per operating point?

8 Modeling

Building a model is easy. Building a meaningful model is harder, but still trivial. Building a meaningful and solvable model is hard.

These vessels do not have repeatable operating profiles

we do not model differential electrical dynamics explicitly because their effect on the supervisory layer is captured through constraint envelopes.

Unless the ships are actually short travel, and able to charge at port. Implementing batteries on ships are making the ships greener only by making the generator run more efficiently

MILP defines an upper bound on what any implementable PMS can achieve.

8.1 Optimization

"Start/stopp gir økt slitasje, men dette er ikke kvantifisert av produsent" - ¿ kan bruke: minimum on/off-tid eller liten heuristisk start-penalty (sensitivitetsanalyse)

8.2 Generators

The generrators are of type jaddajadda. Because this are rated 'kWe', the supplier has provided with the electrical energy at a given fuel consumptuon/SFOC. Therefore we do not need to include mechanical losses of the generator.

We run fixed rpm at 1500/1800. Only choose output from kW

8.3 Battery

Faen me m å jo faktisk lada opp batteriene også, kossen ska detta formuleras inn. akk nå så bare minimere me fuel. Kass objektiv kan me legga inn for å få lada batteriene optimalt?

Current limit for batteries is given in Amps, not power. Do we need to consider the batteries current limit?

The battery is modeled as a "passive" component, that will eat up the power difference between produces generator power and the total ship load.

$P_{batt} = P_{load} - \sum P_{gen}$

Necessary with constraint on pattery power $-> C_{batt,p=I_lim*V}$

Maybe need to actually model the battery voltage?

8.4 Controller

receding-horizon scheduler

9 Discussion

9.1 Modeling

Coult have implemented other generator constraints: Ramp limits, minimum up/down time

Battery model: Could have implemented battery degredation model, or ramp limit constraint

Er det mulig å få diskutert de to overstående punktene?

10 Conclusion

Bibliography

[1] Rona George Allwyn, Amer Al-Hinai and Vijaya Margaret. 'Comprehensive Review on Energy Management Strategy in Microgrids'. In: *Energy Reports* 9 (Aug. 2023). DOI: 10.1016/j.egyr.2023.04.360.

[2] F. D'Agostino et al. 'A Security-Constrained Optimal Power Management Algorithm for Shipboard Microgrids with Battery Energy Storage System'. In: *2023 IEEE International Conference on Electrical Systems for Aircraft, Railway, Ship Propulsion and Road Vehicles & International Transportation Electrification Conference (ESARS-ITEC)*. 2023, pp. 1–6. DOI: 10.1109/ESARS-ITEC57127.2023.10114833.

[3] Monaaf D. A. Al-Falahi et al. 'AC Ship Microgrids: Control and Power Management Optimization'. In: *Energies* 11.6 (2018). ISSN: 1996-1073. DOI: 10.3390/en11061458. URL: https://www.mdpi.com/1996-1073/11/6/1458.

[4] Monaaf D.A. Al-Falahi et al. 'Power management optimization of hybrid power systems in electric ferries'. In: *Energy Conversion and Management* 172 (2018), pp. 50–66. ISSN: 0196-8904. DOI: 10.1016/j.enconman.2018.07.012. URL: https://www.sciencedirect.com/science/article/pii/S0196890418307362.

[5] Pramod Ghimire et al. 'Shipboard Electric Power Conversion: System Architecture, Applications, Control, and Challenges [Technology Leaders]'. In: *IEEE Electrification Magazine* 7.4 (2019), pp. 6–20. DOI: 10.1109/MELE.2019.2943948.

[6] Xiaodong Guo et al. 'Energy management system for hybrid ship: Status and perspectives'. In: *Ocean Engineering* 310 (2024), p. 118638. ISSN: 0029-8018. DOI: 10.1016/j.oceaneng.2024.118638. URL: https://www.sciencedirect.com/science/article/pii/S0029801824019760.

[7] Omer Berkehan Inal, Jean-Frédéric Charpentier and Cengiz Deniz. 'Hybrid power and propulsion systems for ships: Current status and future challenges'. In: *Renewable and Sustainable Energy Reviews* 156 (2022), p. 111965. ISSN: 1364-0321. DOI: 10.1016/j.rser.2021.111965. URL: https://www.sciencedirect.com/science/article/pii/S1364032121012302.

[8] Mohammadjavad Mobarra, Miloud Rezkallah and Adrian Ilinca. 'Variable Speed Diesel Generators: Performance and Characteristic Comparison'. In: *Energies* 15.2 (2022). ISSN: 1996-1073. DOI: 10.3390/en15020592. URL: https://www.mdpi.com/1996-1073/15/2/592.

[9] Daeseong Park et al. 'An Optimal Energy Management System for Marine Hybrid Power Systems'. In: *2021 IEEE 22nd Workshop on Control and Modelling of Power Electronics (COMPEL)*. 2021, pp. 1–8. DOI: 10.1109/COMPEL52922.2021.9645951.

[10] Quang Dao Vuong et al. 'Study on the Variable Speed Diesel Generator and Effects on Structure Vibration Behavior in the DC Grid'. In: *Applied Sciences* 11.24 (2021). ISSN: 2076-3417. DOI: 10.3390/app112412049. URL: https://www.mdpi.com/2076-3417/11/24/12049.

[11] H. Paul Williams. *Model Building in Mathematical Programming*. 5th ed. Wiley, 2013.

[12] Peilin Xie et al. 'Optimization-Based Power and Energy Management System in Shipboard Microgrid: A Review'. In: *IEEE Systems Journal* 16.1 (2022), pp. 578–590. DOI: 10.1109/JSYST.2020.3047673.

[13] Luona Xu et al. 'A Review of DC Shipboard Microgrids—Part I: Power Architectures, Energy Storage, and Power Converters'. In: *IEEE Transactions on Power Electronics* 37.5 (2022), pp. 5155–5172. DOI: 10.1109/TPEL.2021.3128417.

[14] Luona Xu et al. 'Coordinated Control of Diesel Generators and Batteries in DC Hybrid Electric Shipboard Power System'. In: *Energies* 14.19 (2021). ISSN: 1996-1073. DOI: 10.3390/en14196246. URL: https://www.mdpi.com/1996-1073/14/19/6246.

A Battery Datasheet

Datasheet Akasol/Volvo GEN 3 Batteries

Technical specification	AS 9 AKM 144 CYC
Weight (with brackets)	609.5 kg
Size(with brackets)	1890x728x310
Modules in series	9s1p
Module configuration	20s30p
Short circuit current	5 kA
Precharge resistor	Vishay PTCEL17R501TBE in 1S19P (500ohms each)
	The battery is specified to disconnect loads up to 27 µH
Fuse	Fuse Mersen MEV100A150-4
Contactor	Gigavac GV241 CAX
Nominal Voltage	655V
Fully charged Voltage	756V
Cut-off voltage	560V
Nominal Capacity	94 kWh
Max Discharge current	150A
Max Charge current(10s)	144A
Cont. Discharge current	144A
Cont. Charge current	115A
Grav.Energy density	167kWh/kg
Vol. Energy density	252 Wh/l
Power density	190 W/kg

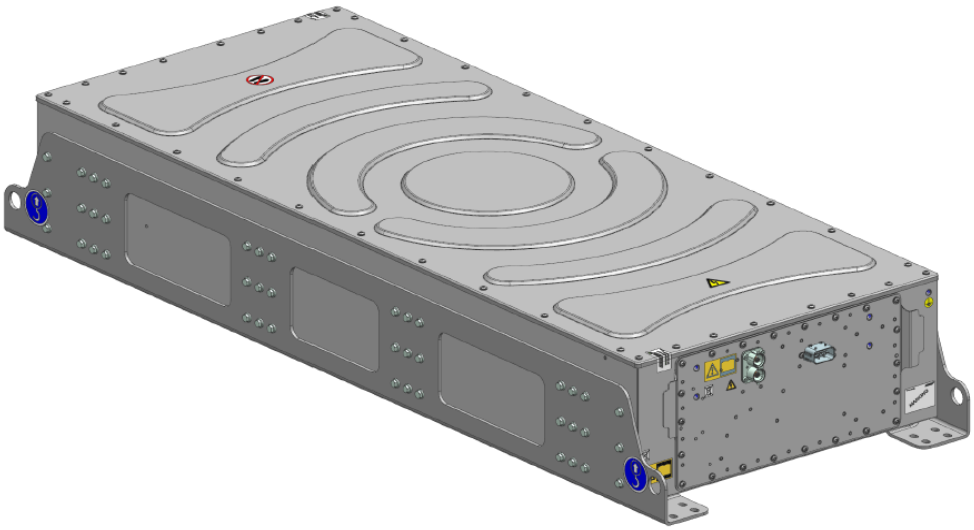

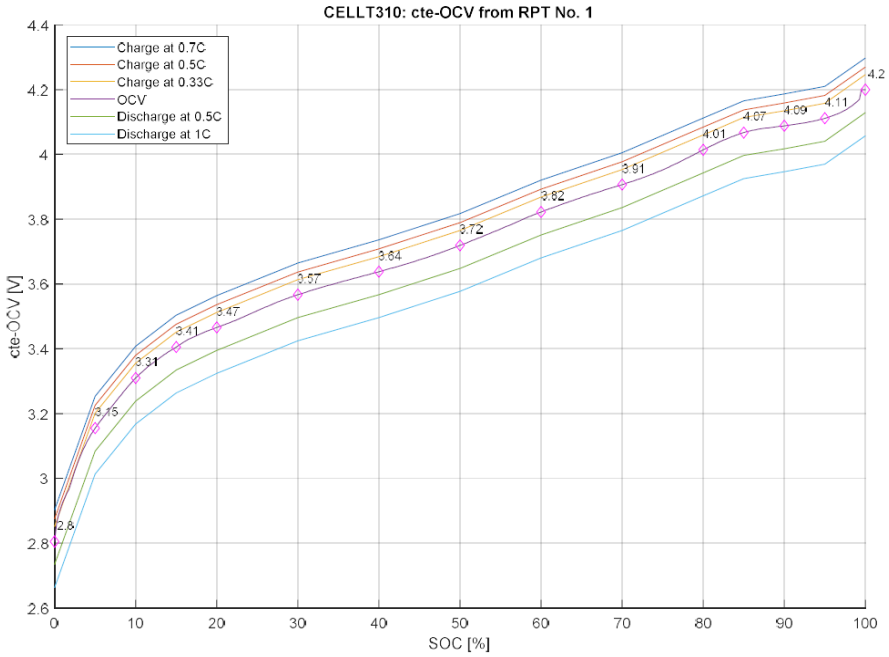

Table 4: Power Characteristics

Parameter	Value		
Peak Current (10s)	Charge direction	10% SOC @25°C	144A
		50% SOC @25°C	126A
		90% SOC @25°C	27A
	Discharge direction	10% SOC @25°C	90A
		50% SOC @25°C	150A
		90% SOC @25°C	150A
Continuous Current	Charge direction	10% SOC @25°C	115A
		50% SOC @25°C	115A
		90% SOC @25°C	27A
	Discharge direction	10% SOC @25°C	60A
		50% SOC @25°C	144A
		90% SOC @25°C	144A

Table 2: Coolant system information

Parameter	Value
Flow Rate (nominal)	600 l/h per System
Coolant Type	Any type fulfilling Volvo standard STD 418-0001 (recommended: VCS 85108900, mixed with 40 % clean water or already mixed as VCS 85108913)
Pressure max.	2.5 bar overpressure (non pulsating)
Pressure Drop in/out at nom. Flow	229mbar (± 45mbar)
Coolant Volume inside Battery	763ml
Structure of Coolant System	Single inlet, single outlet

B Generator Dataset

VOLVO PENTA **MARINE VARIABLE SPEED GENSET**

D13-MH (VG)

12.78 liter, in-line 6 cylinder
257 — 385 kWe

Technical Data

Engine designation	D13 MH (VG)		
No. of cylinders and configuration	in-line 6		
Method of operation	4-stroke, direct-injected, turbocharged diesel engine with charge air cooler		
Bore / stroke, mm	131 / 158		
Displacement, l (in³)	12.78 (779.7)		
Compression ratio	18.5:1		
Engine	D13 MH 400	D13 MH 500	D13 MH 600
Crankshaft Power HE/KC Cooling, kWm	294	368	441
Rating	1	1	2
Electrical Power, kWe @ rpm	257 @ 1800	277 @ 1800	385 @ 1900
Emission compliance	IMO II, IMO III, China 2, EU NRMM Stage V	IMO II, IMO III, China 2	IMO II, IMO III, China 2
Electrical Power, kWe @ rpm	257 @ 1800	277 @ 1800	385 @ 1850
Emission compliance	US EPA Tier 3	US EPA Tier 3	US EPA Tier 3
Specific fuel consumption HE/KC, g/kWh at kWe & rpm (IMO III)			
Peak efficiency	191 (240 kWe / 1400 rpm)	191 (240 kWe / 1400 rpm)	191 (310 kWe / 1400 rpm)
50%	200 (128 kWe / 1300 rpm)	195 (138 kWe / 1300 rpm)	193 (192 kWe / 1300 rpm)
75%	192 (192 kWe / 1300 rpm)	191 (207 kWe / 1400 rpm)	191 (288 kWe / 1400 rpm)
Rated power / rated speed	199 (257 kWe / 1800 rpm)	198 (277 kWe / 1800 rpm)	198 (385 kWe / 1900 rpm)
Recommended fuel to conform to	ASTM-D975 1-D & 2-D, EN 590 or JIS KK 2204		

Fuel temperature 40°C (104°F). Technical data according to ISO 3046 Fuel Stop Power with a tolerance ±4%. Fuel with a lower calorific value of 42700 kJ/kg and density of 840 g/liter at 15°C (60°F). Merchant fuel may differ from this specification which will influence engine power output and fuel consumption. The engine is certified according to IMO Tier III for diesel electric propulsion.

D13-MH (VG)

12.78 liter, in-line 6 cylinder

Technical description

Complete Variable speed Genset
- High system efficiency
- Possible to operate at multiple fix speeds or full variable speeds
- Light and compact Generator set
- Engine coupled to generator via flexible coupling
- Flexible mountings included
- Synchronization not needed
- Possibility to mix engine sizes
- Generator could be ordered with Marine classification according to DNV, LR, BV, RINA and ABS.

Generator
- Permanent magnet generator technology
- Small, robust, light and efficient
- Water cooled
- Insulation Class H, Temperature rise Class F
- Double bearing
- IP65 as standard

Standard EM-PMI540-T1500 and T2000
- Foot mounting (+FM1)
- Low voltage connections done with connection box (with 3xM25 and 4xM16 cable glands) and terminal strip (+LVB1)
- Anti-condensation heater, 230 VAC/130 W (+HEAT1)
- PT100 in bearing (+BTMP1)
- Redundat temperature surveillance of windings, PT100 (+TEMP5)
- Insulated bearing in N-end (+BIN)
- Rotating sensor, in-built non contact resolver, 8-pole pair, needed for non Danfoss inverters (+RES1)

Standard EM-PMI540-T2000
- Double phase connections, extended connection boxes (with 2x M32 cable glands per phase) (+CE1)

Engine and block
- Cylinder block and cylinder head made of cast iron
- One-piece cast-iron cylinder head
- Ladder frame fitted to engine block
- Replaceable wet cylinder liners and valve seats/guides
- Drop forged crankshaft with induction hardened bearing surfaces and fillets with seven main bearings
- Four valve per cylinder layout with overhead camshaft
- Each cylinder features crossflow inlet and exhaust ducts
- Gallery oil cooled forged aluminum pistons, three piston rings (keystone top ring)
- Rear-end transmission
- Closed crankcase ventilation

Lubrication system
- Freshwater-cooled oil cooler integrated in cylinder block
- Twin full flow oil filter of spin-on type and single by-pass filter

Fuel system
- Electronic Unit Injectors
- Gear-driven fuel pump, driven by timing gear
- Electronically controlled injection timing
- 5-hole high pressure injector nozzles
- Twin engine-mounted spin-on fine fuel filters with change over valve

Air inlet and exhaust system
- Mid-positioned twin entry turbocharger with aftercooler
- Air filter with replaceable inserts
- Wet exhaust elbow (option)
- Loss of sea water alarm

Cooling system

1. Heat Exchanger cooled system (HE)
- For seawater- and central-cooled Gensets
- Engine-mounted plate heat exchanger with expansion tank
- Belt-driven centrifugal freshwater pump
- Belt-driven rubber impeller raw water pump

2. Keel cooled system (KC)
- 2-circuit cooling system
- Belt-driven centrifugal cooling water pump in HT circuit
- Engine mounted expansion tank in HT circuit
- Gear driven rubber impeller cooling water pump in CAC LT circuit

Control system

Two options available:
1. MCC (Marine Commercial Control) an open system that is type approved, including separate safety shutdown system.
2. Open CAN Interface, engine delivered without control system. Different options with or without shut down senders and switches.

Optional equipment

Engine
- Exhaust temperature indication
- Engine heater

Exhaust aftertreatment system
- SCR (Selective Catalytic Reduction)
- Aqueous UREA solution 32.5% or 40%
- Complete system – developed, certified, and serviced by one company.
- Fully integrated capabilities
- SCR unit reduces noise by up to 35 dBA
- Wide range of installation options available

D13-MH (VG)

12.78 liter, in-line 6 cylinder

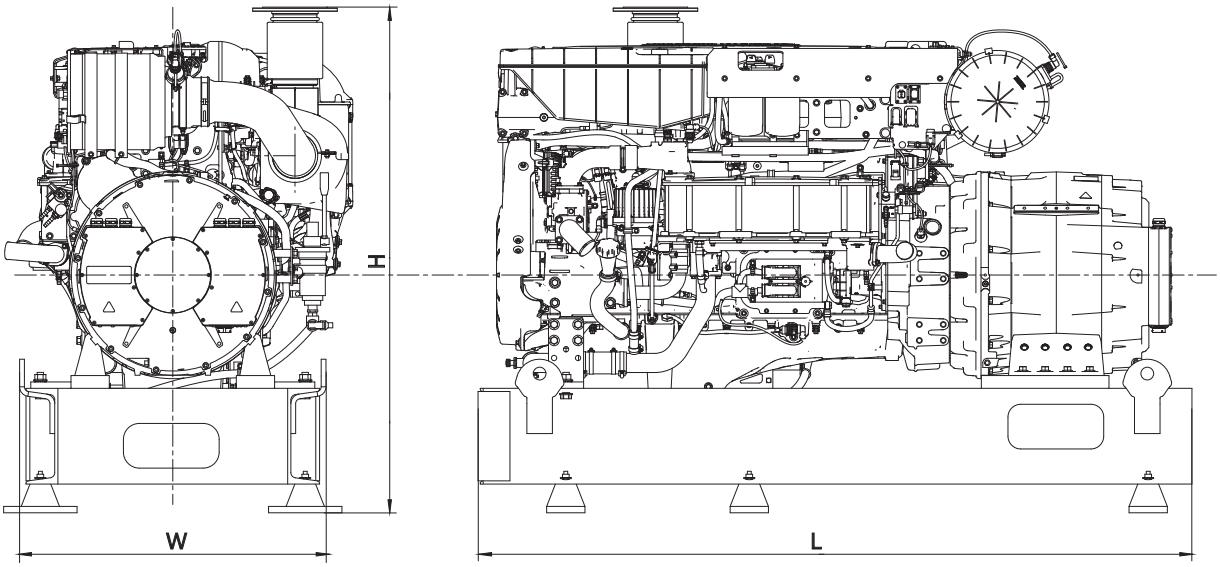

Technical Data HE/KC Genset (Class F)

Power output at 1800 rpm 466 VAC, kWe
D13 MH 400 / EM-PMI540 T1500-1800-DUAL 257

Power output at 1800 rpm 466 VAC, kWe
D13 MH 500 / EM-PMI540 T1500-1800-DUAL 277

Power output at 1900 rpm 469 VAC, kWe *
D13 MH 600 / EM-PMI540-T2000-2100-DUAL 385

Power output at 1850 rpm 420 VAC, kWe **
D13 MH 600 / EM-PMI540-T2000-2100-DUAL 385

* IMO II, IMO III, China 2
** US EPA Tier 3

Inverter requirement
Nominal inverter switching frequency . . . . . 8 kHz

Minimal inverter switching frequency . . . . . 4 kHz
(with limited speed 1,4 times nominal speed)

Fuel temperature 40°C (104°F). Technical data according to ISO 3046 Fuel Stop Power and ISO 8665. Fuel with a lower calorific value of 42700 kJ/kg and density of 840 g/liter at 15°C (60°F). Merchant fuel may differ from this specification which will influence engine power output and fuel consumption.

Dimensions L x W x H_1 (mm), not for installation
D13 MH / EM-PMI540 T1500/T2000. . 2237 x 960 x 1581

Weight HE, kg
D13 MH / EM-PMI540-T1500-1800-DUAL 2387
D13 MH / EM-PMI540-T2000-2100-DUAL. 2487
Weight KC, kg
D13 MH / EM-PMI540-T1500-1800-DUAL 2347
D13 MH / EM-PMI540-T2000-2100-DUAL. 2447

H1 = Height including exhaust compensator

Not all models, standard equipment and accessories are available in all countries. All specifications are subject to change without notice. The engine illustrated may not be entirely identical to production standard engines.

Contact your local Volvo Penta dealer for more information regarding Volvo Penta engines and optional equipment/ accessories or visit www.volvopenta.com

AB Volvo Penta
SE-405 08 Göteborg, Sweden
www.volvopenta.com

English 06-2024 © 2024 AB Volvo Penta.