Digital System Design

AI Accelerator Architecture: Block Diagram & Recursive Structure

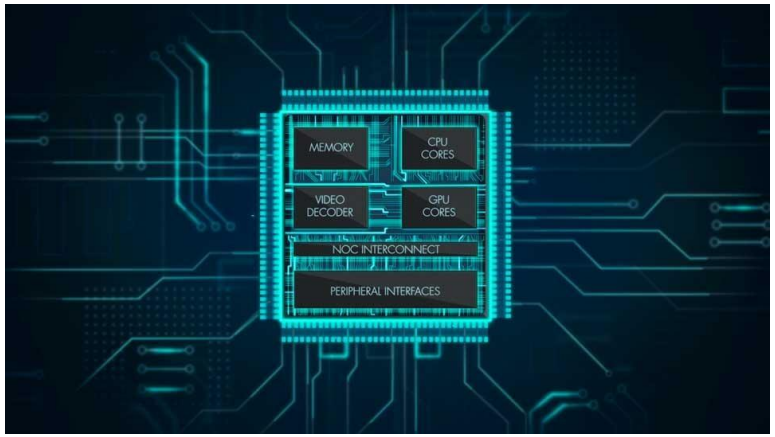

Date : 2026. 03. 26.

Instructor : **Prof. Hyun Kim**

Lecture Note : eclass.seoultech.ac.kr

Office : Mirae Hall #526

Web : idsl.seoultech.ac.kr

Contact : hyunkim@seoultech.ac.kr / 010-9600-5427

Contents

- Simple Block Diagram
- Recursive Structure

Contents

- Simple Block Diagram
- Recursive Structure

Simple Block Diagram

Block Diagram

- Block diagrams are designed to help you understand the role of each module and the flow of signals.
- Depending on the design you implement, you represent **the modules**(*e.g.*, processing unit, buffer) with **blocks**.
- **Arrows** can represent the **flow of signals and data**.

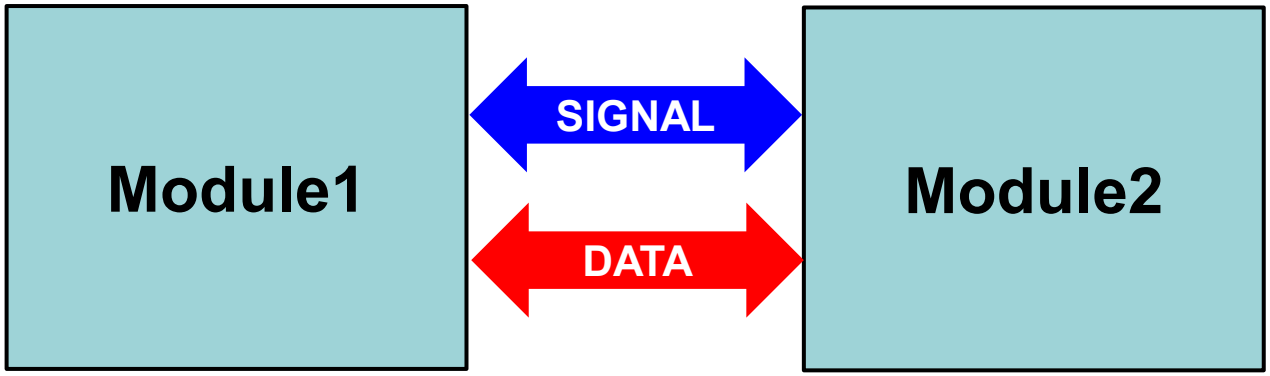

Simple Block Diagram

- Example Architecture
  - Consists of **processing unit**, **buffer** and **global controller**.

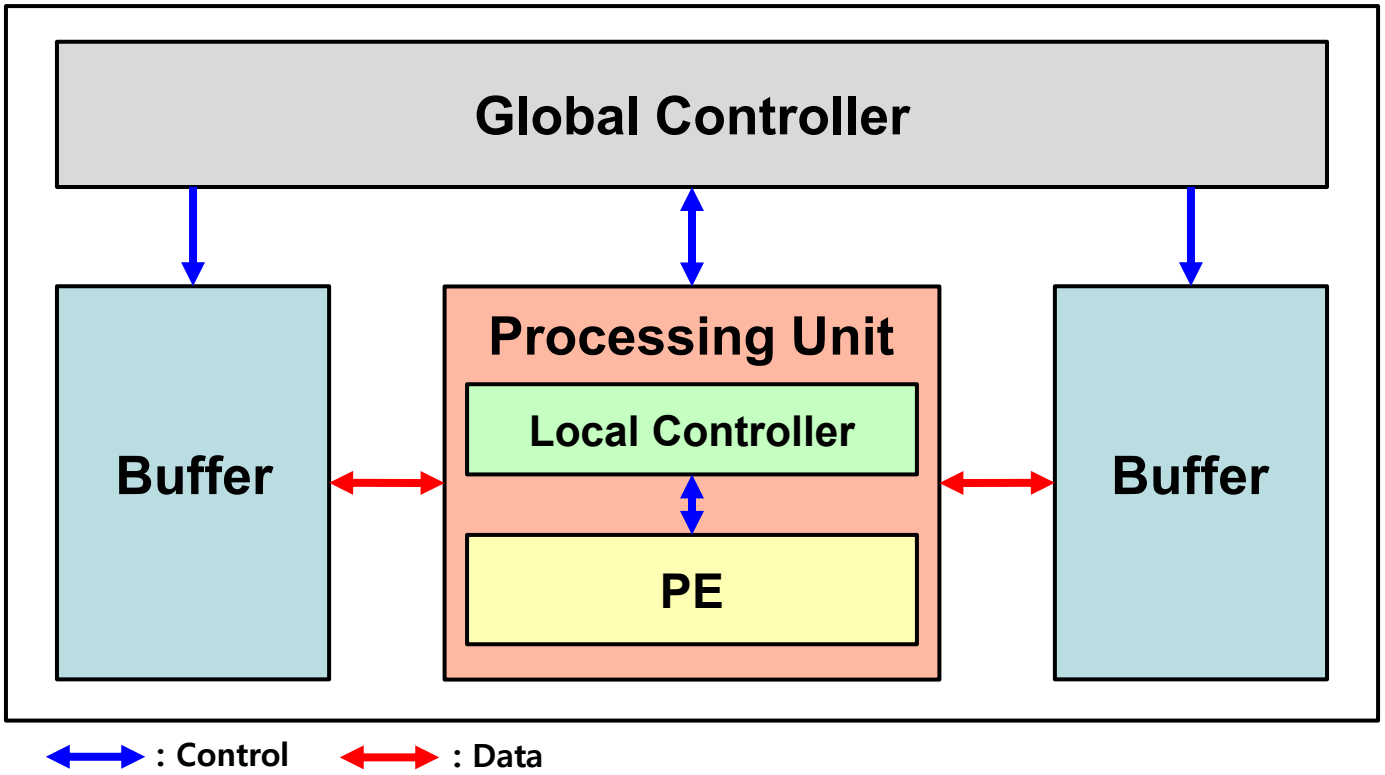

Simple Block Diagram

- Processing Unit
  - Consists of **local controller** and **processing element (PE)** to handle arithmetic operations (*e.g.*, Matrix multiplication).
  - Local controller is controlled by global controller and **feeds PE control signals for data multiplication**. (Optional)

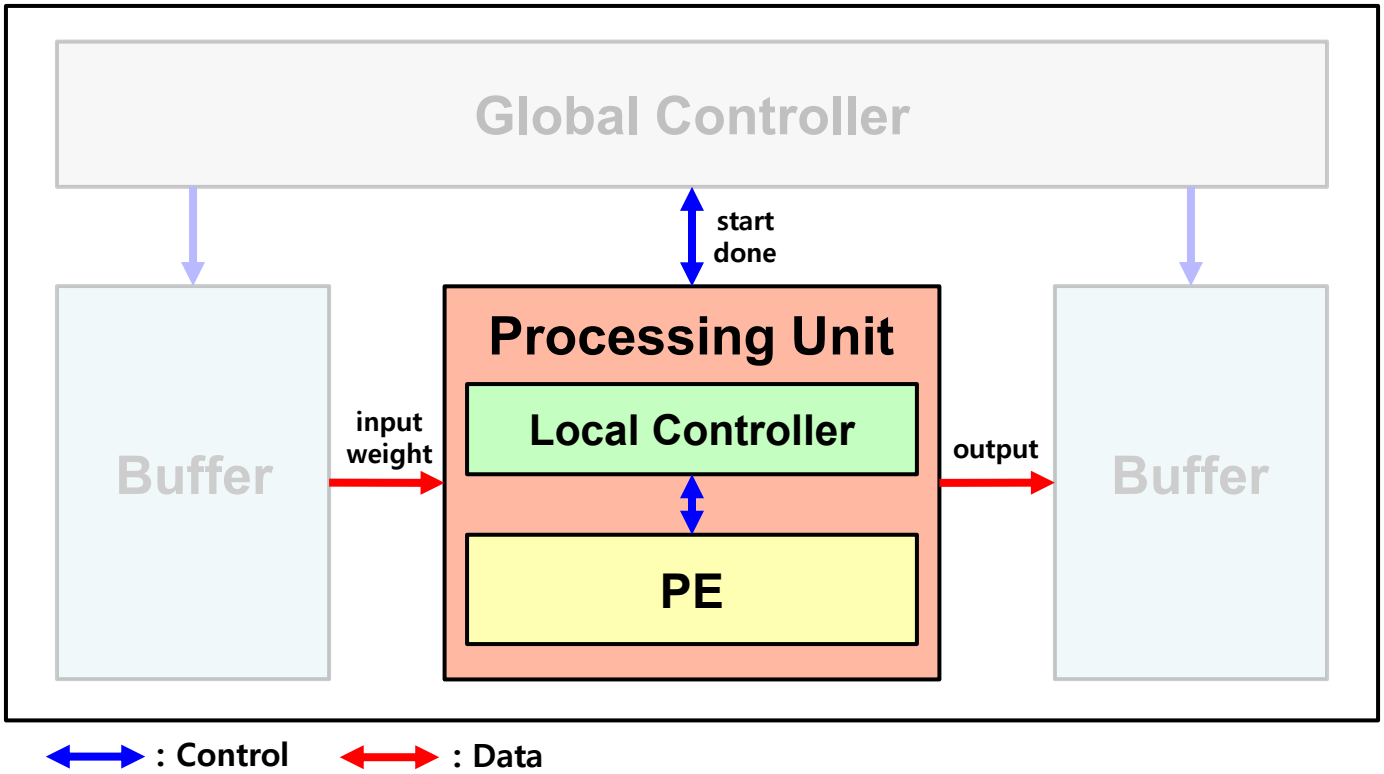

Simple Block Diagram

- Buffer
  - Most basic design for buffers is to use two buffers, one for **input** and the other for **output**.
  - The role of buffer is decided by global controller.
  - Can use multiple buffers for data reuse and parallel execution.

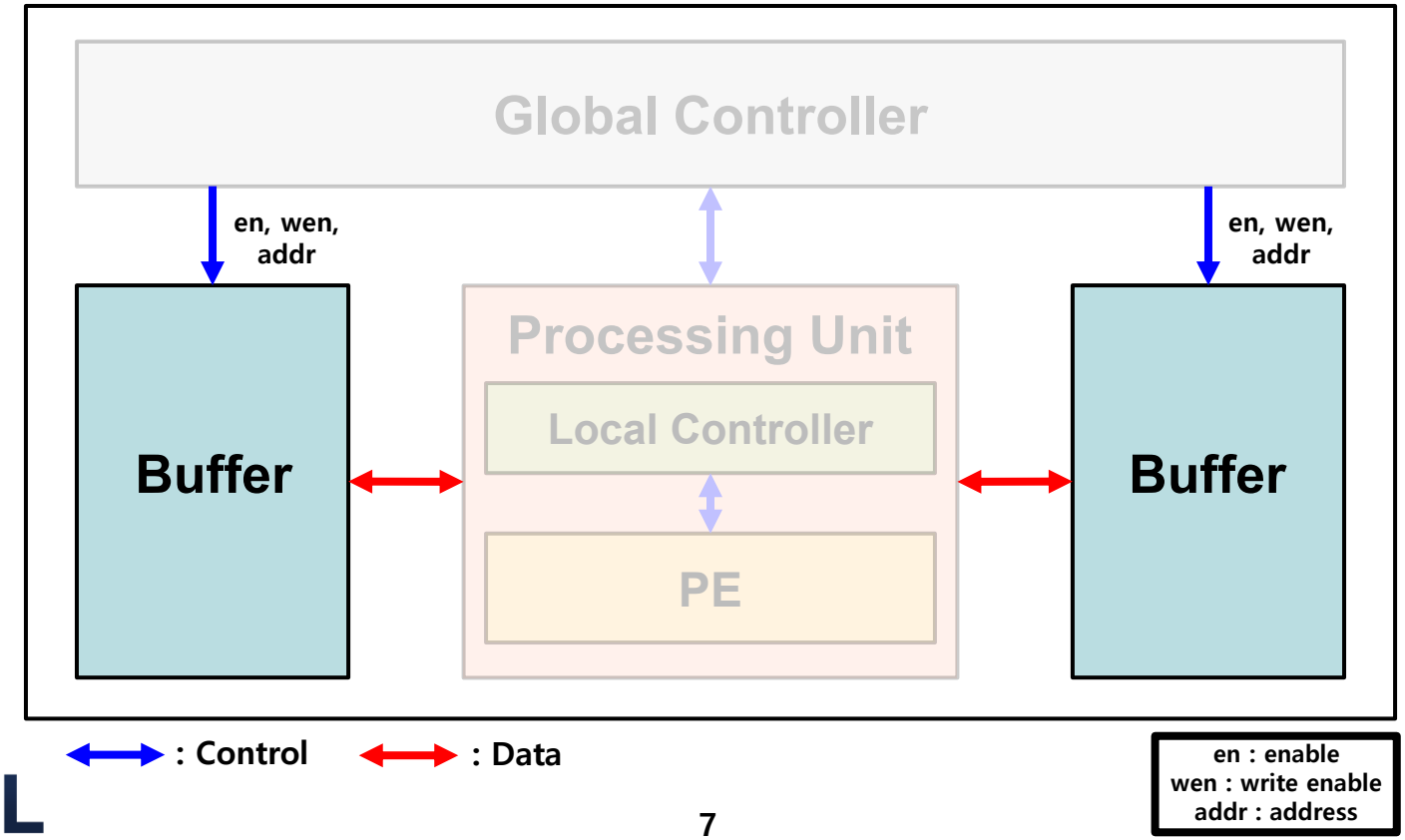

Simple Block Diagram

- Global Controller
  - Control the overall functionality of modules.
  - **Controller manages how data moves within the module.**
  - Initiated by a host processor (e.g., CPU), it uses control signals to coordinate buffers and processing units.

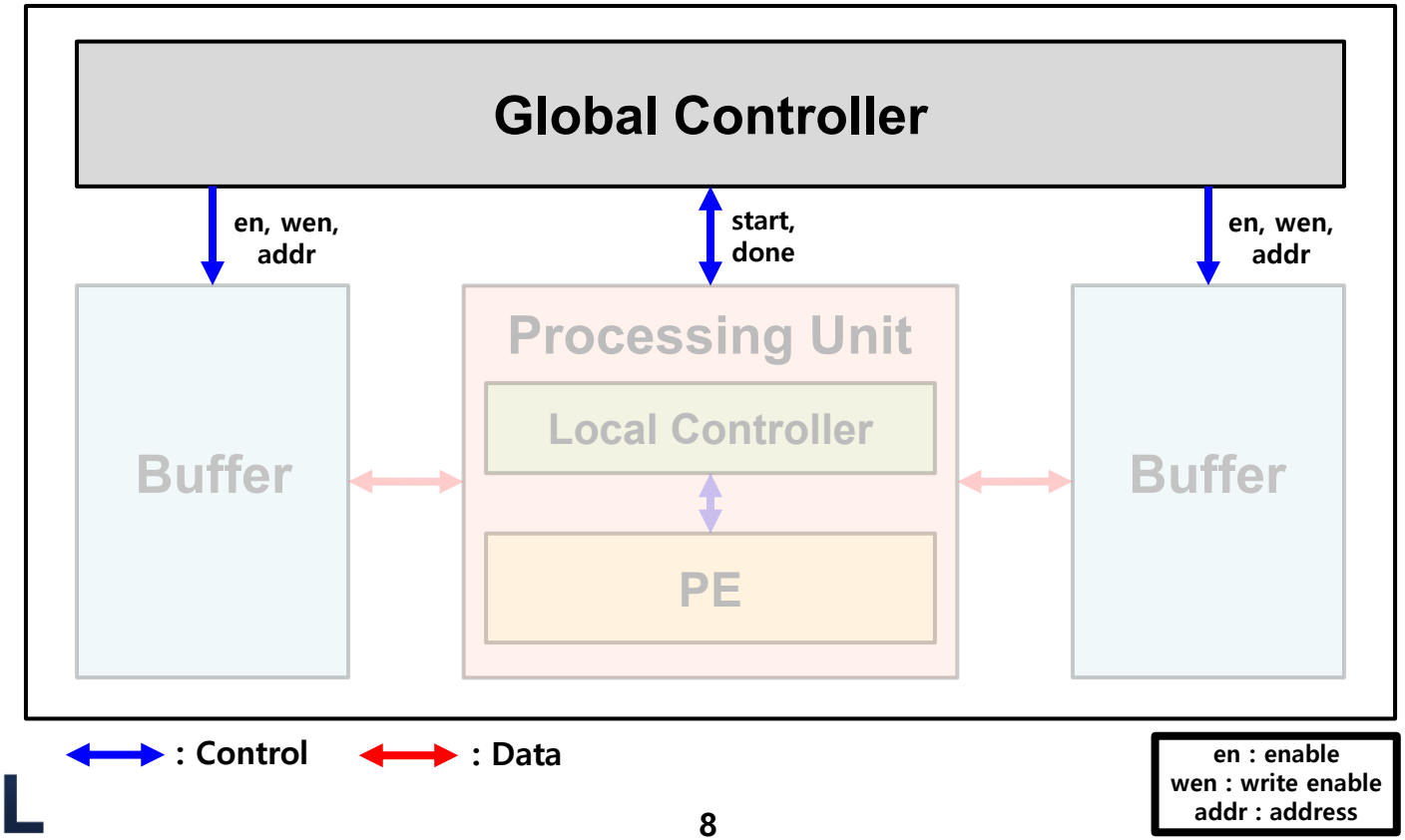

Contents

- Simple Block Diagram
- Recursive Structure

Recursive Structure

- Controller
  - Generates **control signals** for modules.
  - Determines **dataflow of the overall design**.
- Finite State Machine (FSM)
  - There are two types of FSM, Mealy and Moore machines.
  - Present state (and input) makes the output of the state.

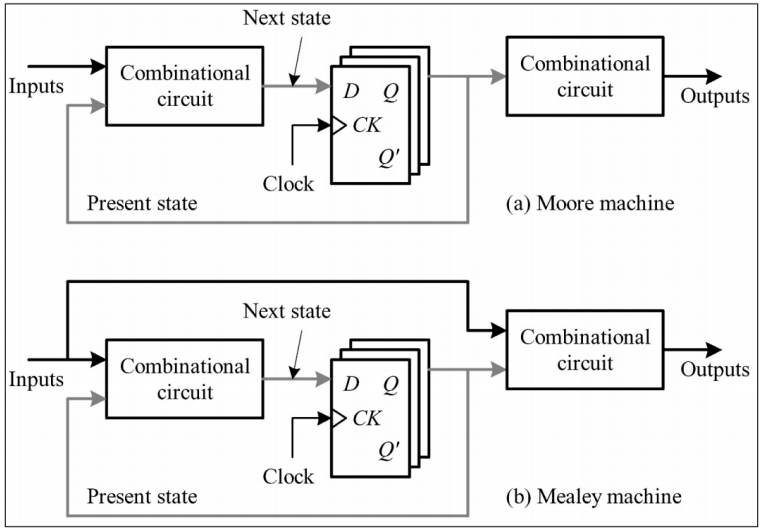

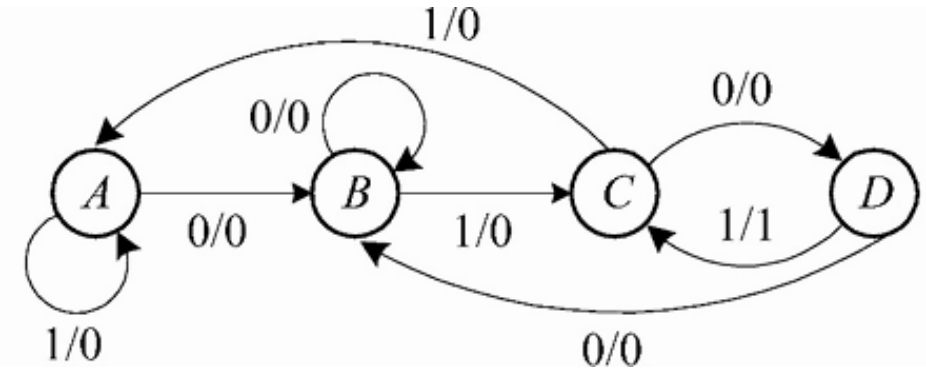

Recursive Structure

Accelerator Controller

- The controller is an **FSM-based unit** that controls the states needed to perform a specific task (*e.g.*, convolution, matrix multiplication).
- It is essential for defining the module's dataflow in accelerator design.
- **More complex algorithms** generally require **more control states**.

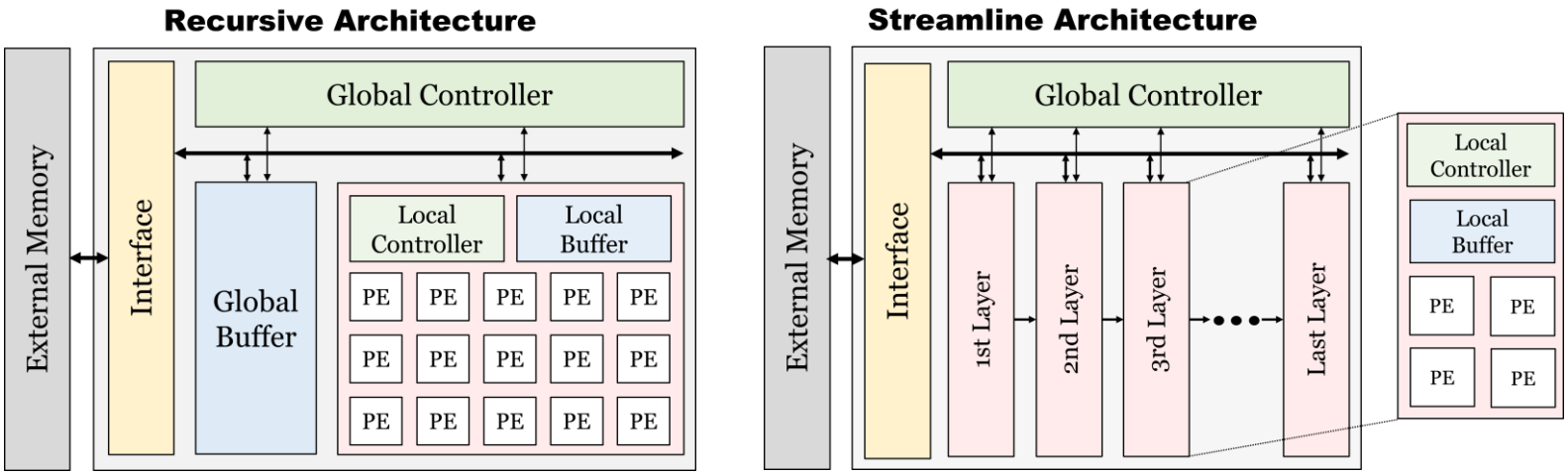

Recursive Structure

AI Accelerator Architecture: Recursive Structure

- Recursive architecture consists of a small number of **PEs that are reused across multiple layers.**
- Instead of assigning dedicated hardware to each layer, the same hardware resources are shared, so the layers are processed **sequentially.**

Advantages

- It is suitable for **resource-constrained designs** because it can be implemented with a small hardware area.
- By reusing the same PEs and buffers across layers, **it reduces overall hardware cost and power consumption.**

Disadvantage

- It requires **frequent access to external memory.**
- Because all layers are processed sequentially, **throughput decreases as the network becomes deeper and larger.**

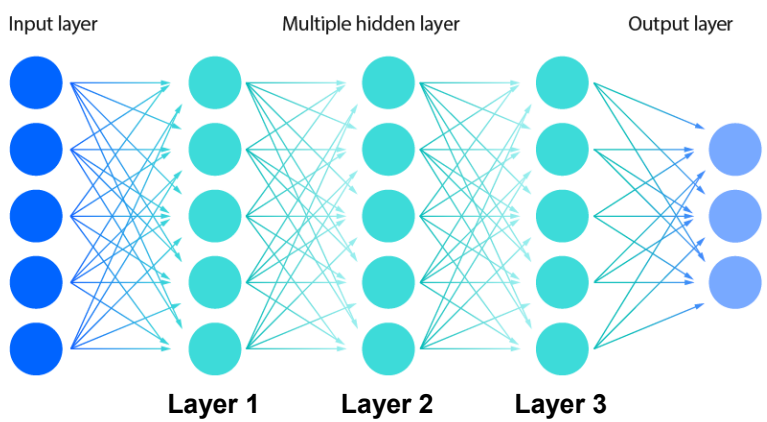

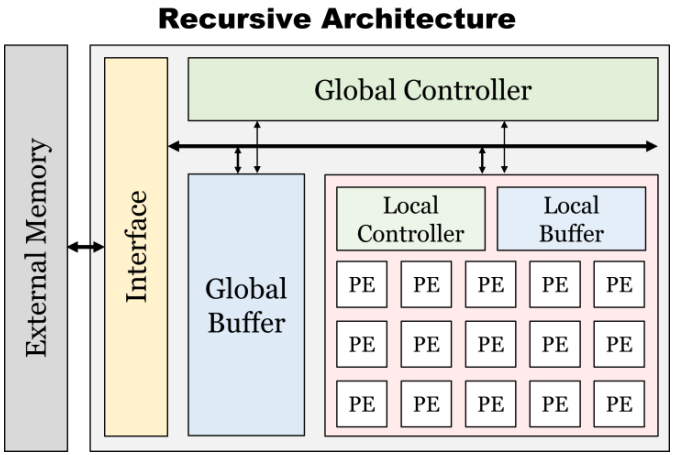

Recursive Structure

- Recursive Accelerator Controller
  - The FSM in the global controller controls **the modules and their local controllers**.

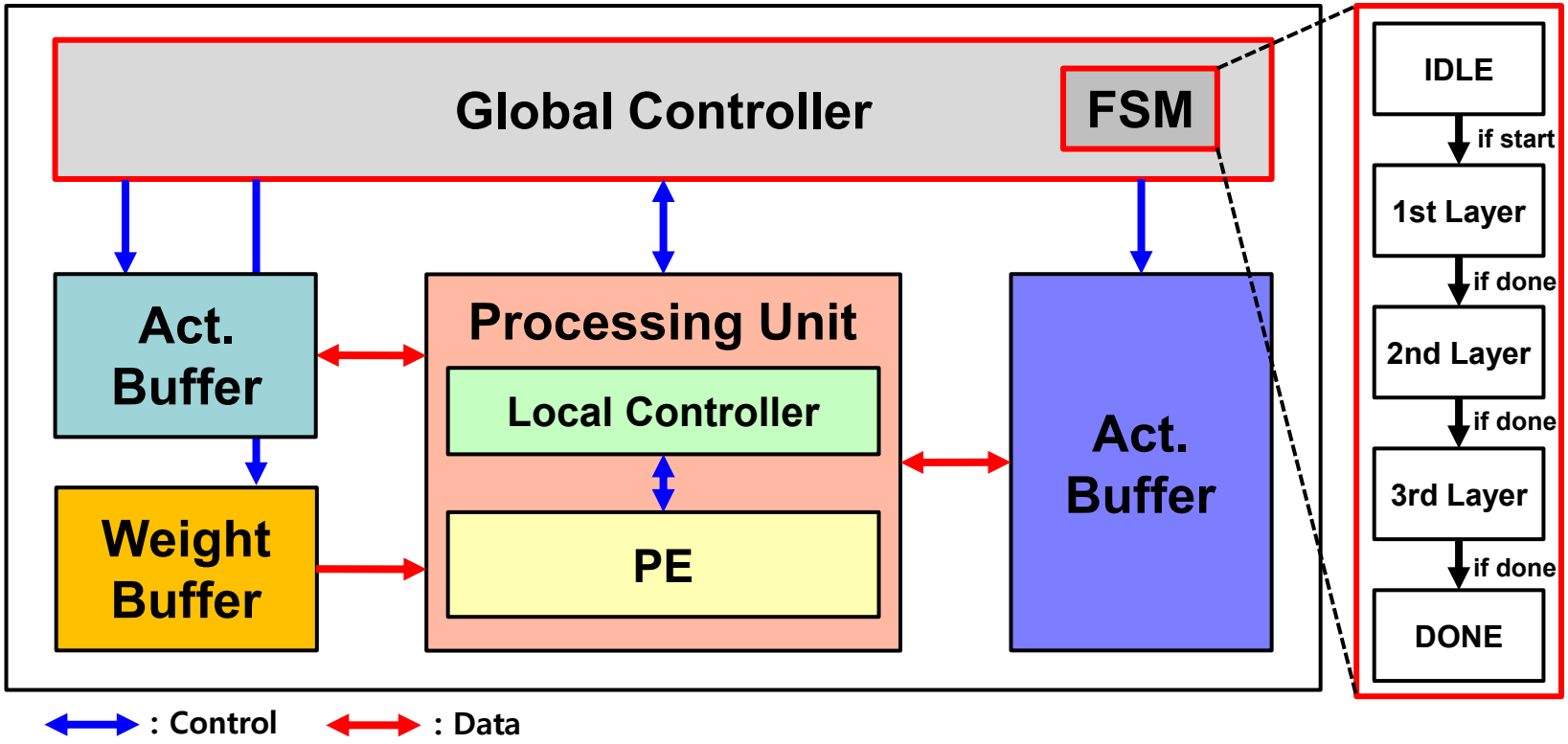

Recursive Structure

- Recursive Accelerator Processing
  - IDLE

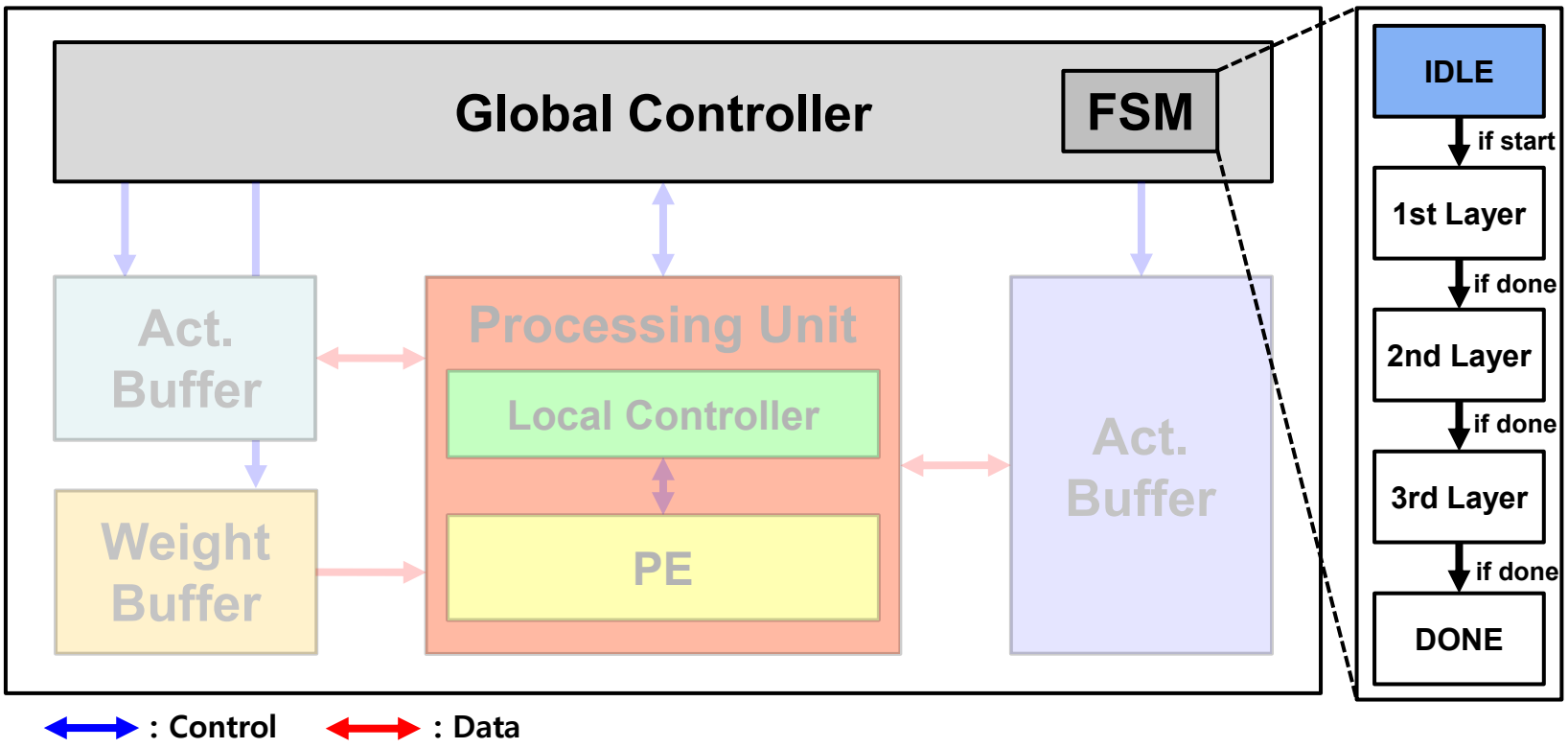

Recursive Structure

- Recursive Accelerator Processing
  - First layer

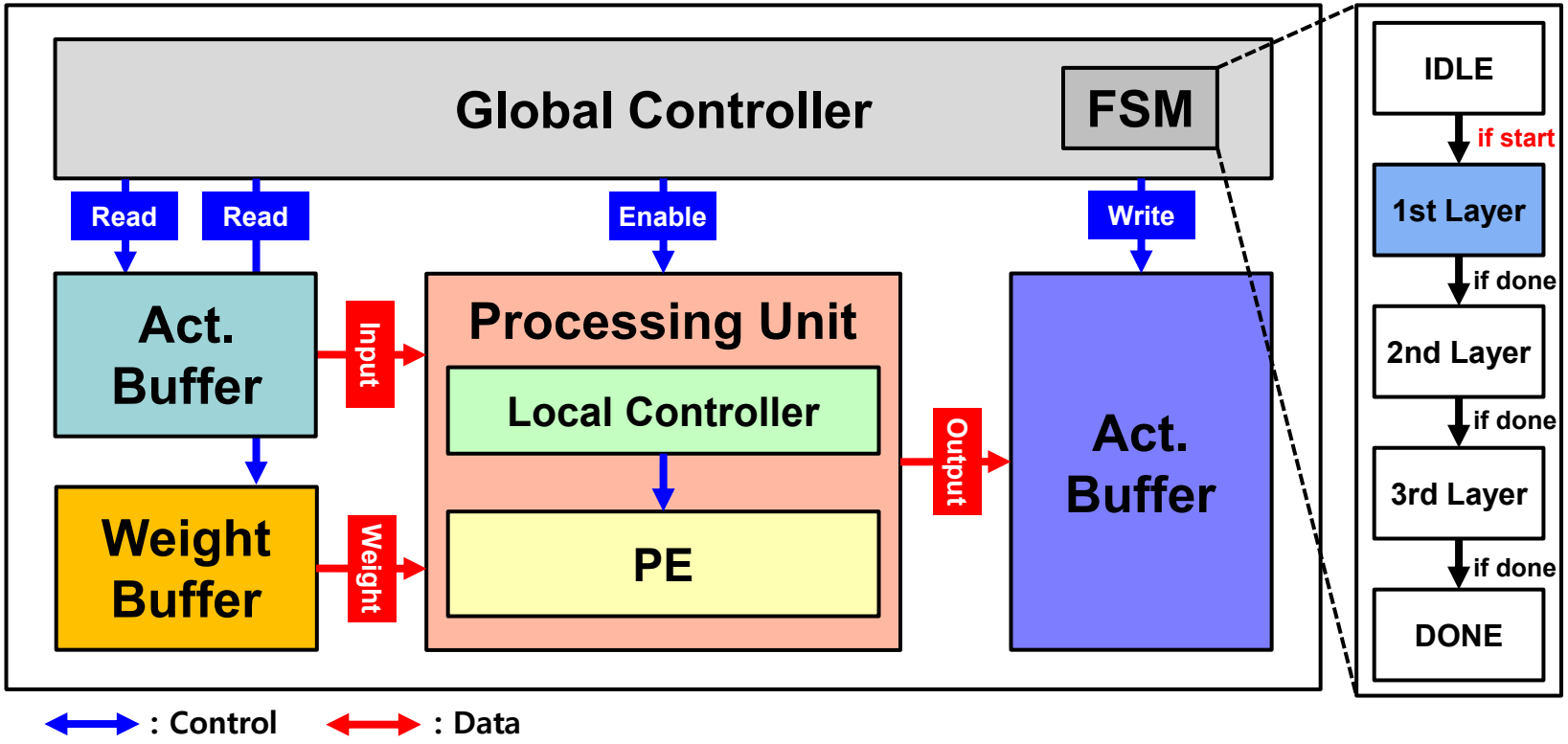

Recursive Structure

- Recursive Accelerator Processing
  - Second layer

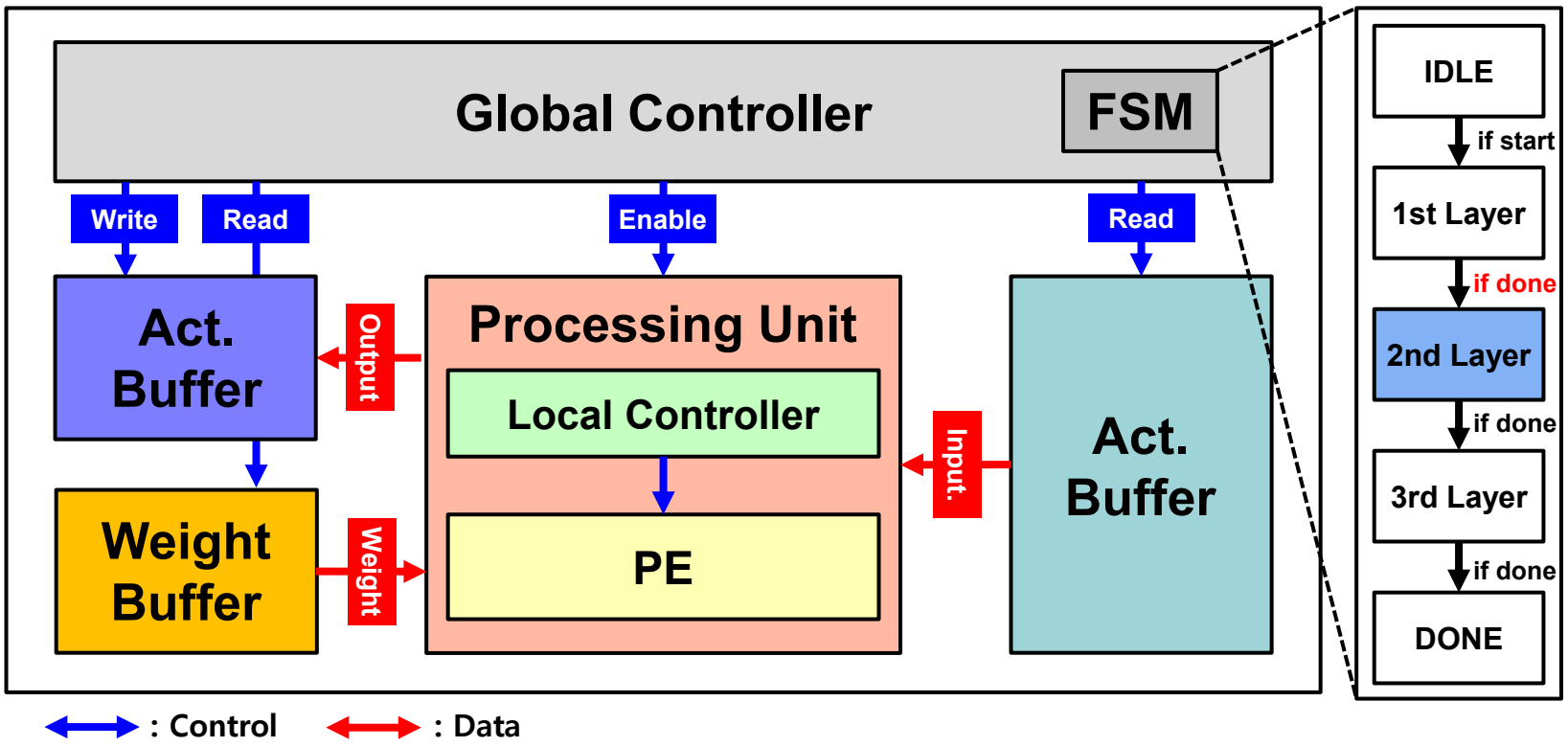

Recursive Structure

- Recursive Accelerator Processing
  - Third layer

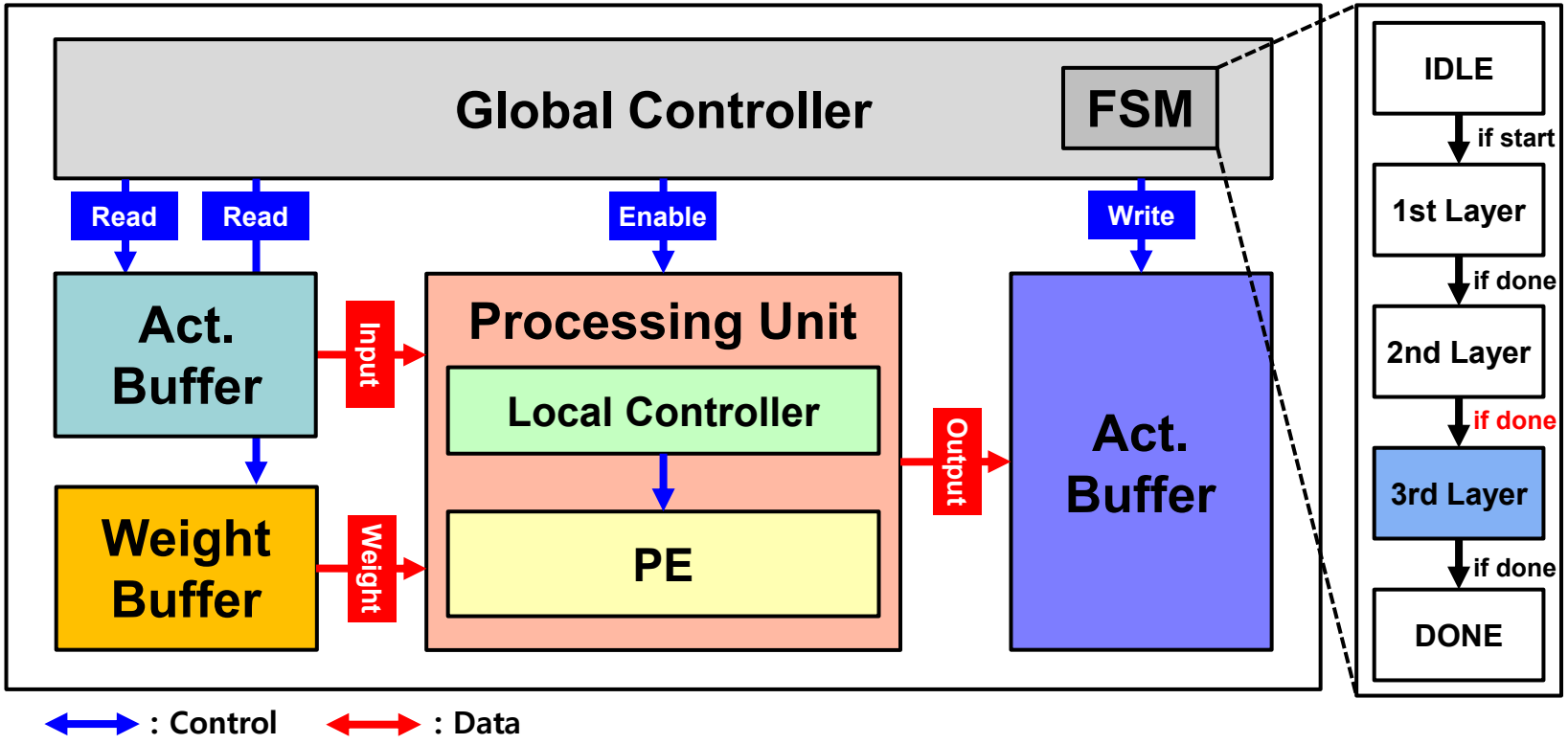

Recursive Structure

- Recursive Accelerator Processing
  - Done

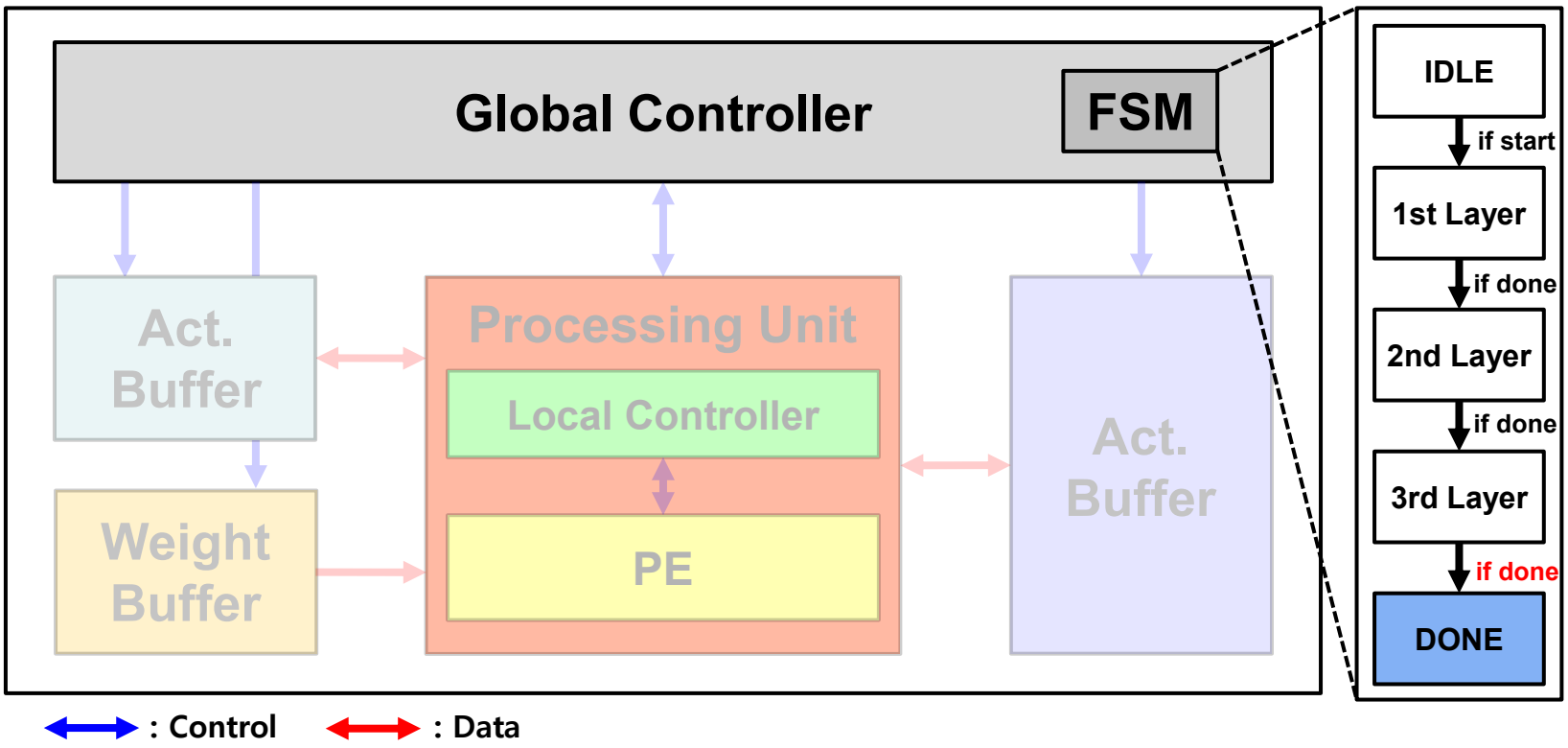

Recursive Structure

End-to-End Processing Flow

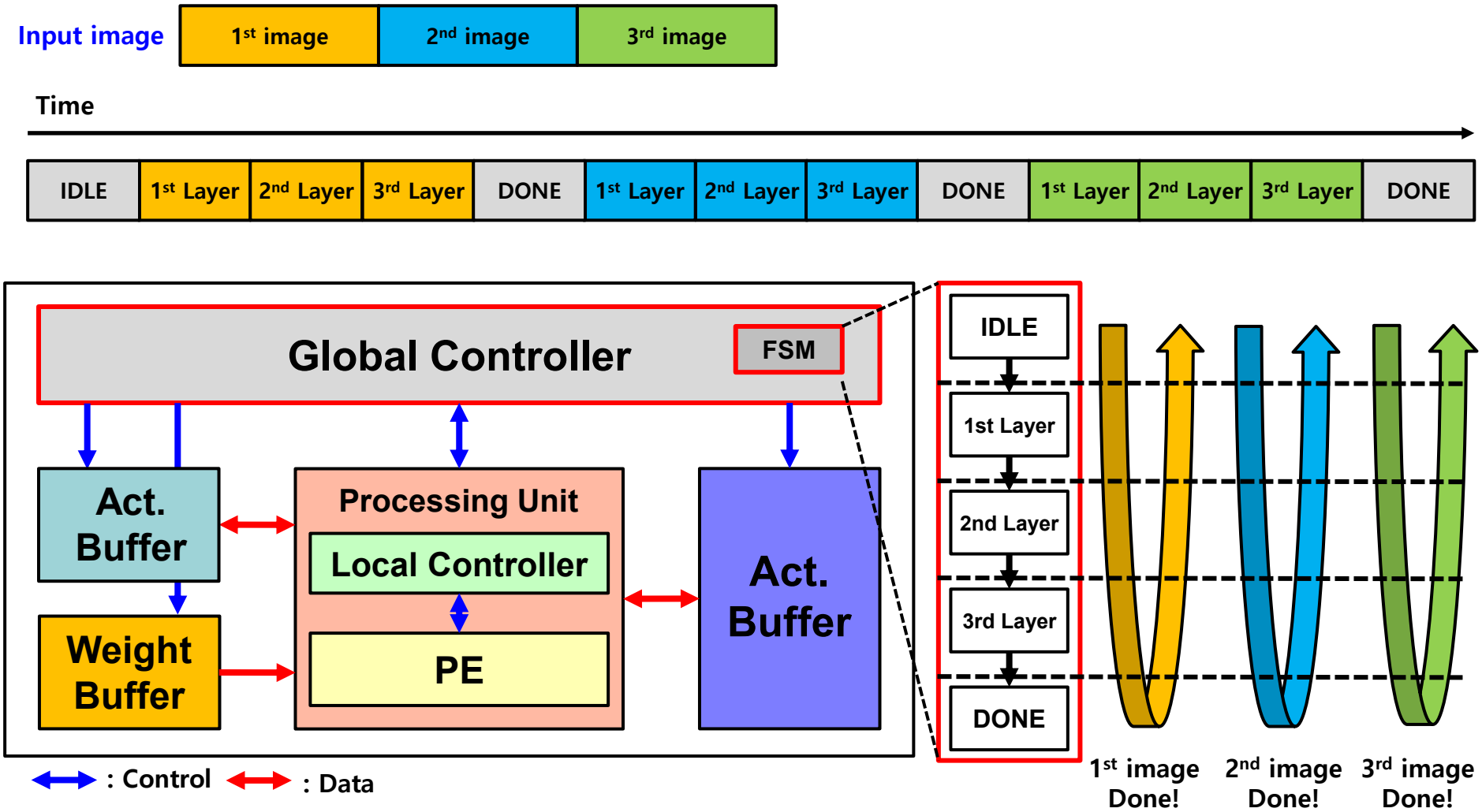

Thank You!