Digital System Design

AI Accelerator Architecture: Streamline Architecture

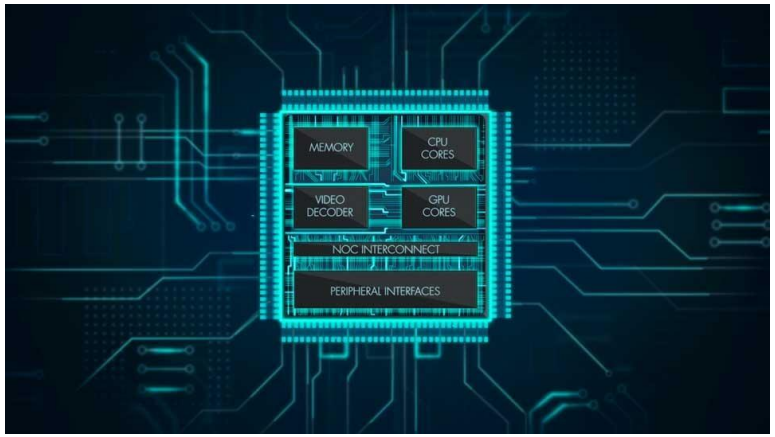

Date :	2026. 04. 02.
Instructor :	**Prof. Hyun Kim**
Lecture Note :	eclass.seoultech.ac.kr
Office :	Mirae Hall #526
Web :	idsl.seoultech.ac.kr
Contact :	hyunkim@seoultech.ac.kr / 010-9600-5427

Contents

- Recursive Architecture (Remind)
- Streamline Architecture

Contents

- Recursive Architecture (Remind)
- Streamline Architecture

Recursive Architecture

AI Accelerator Architecture: Recursive Architecture

- Recursive architecture uses a small number of **PEs reused across multiple layers.**
- Layers are **processed sequentially** using shared hardware.

Advantages

- It is suitable for **resource-constrained designs** due to its small hardware area.
- PE and buffer reuse **reduces cost and power.**

Disadvantage

- It often **requires frequent access to external memory.**
- Sequential processing **lowers throughput** in deep networks.

Recursive Architecture

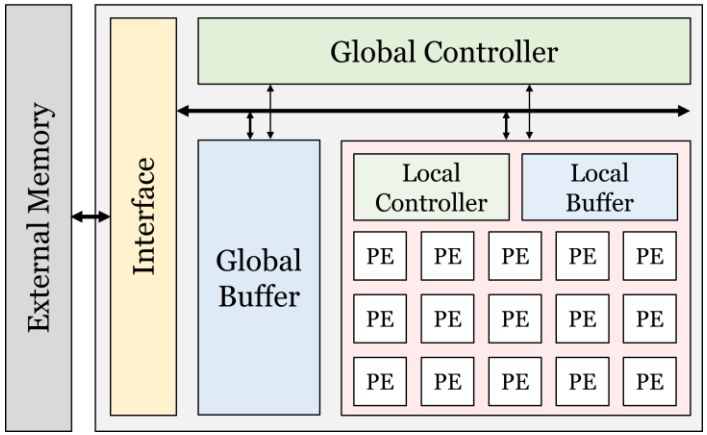

IDSL
Intelligent Digital Systems Design Lab.
SEOULTECH

Recursive End-to-End Flow

End-to-End Processing Flow

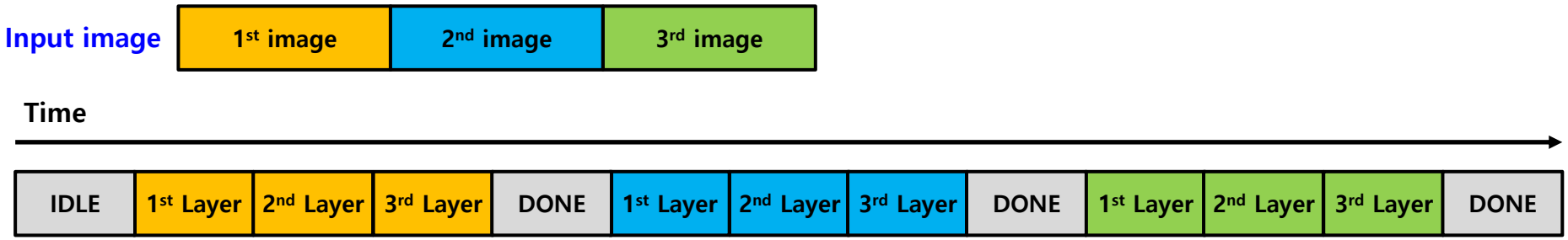

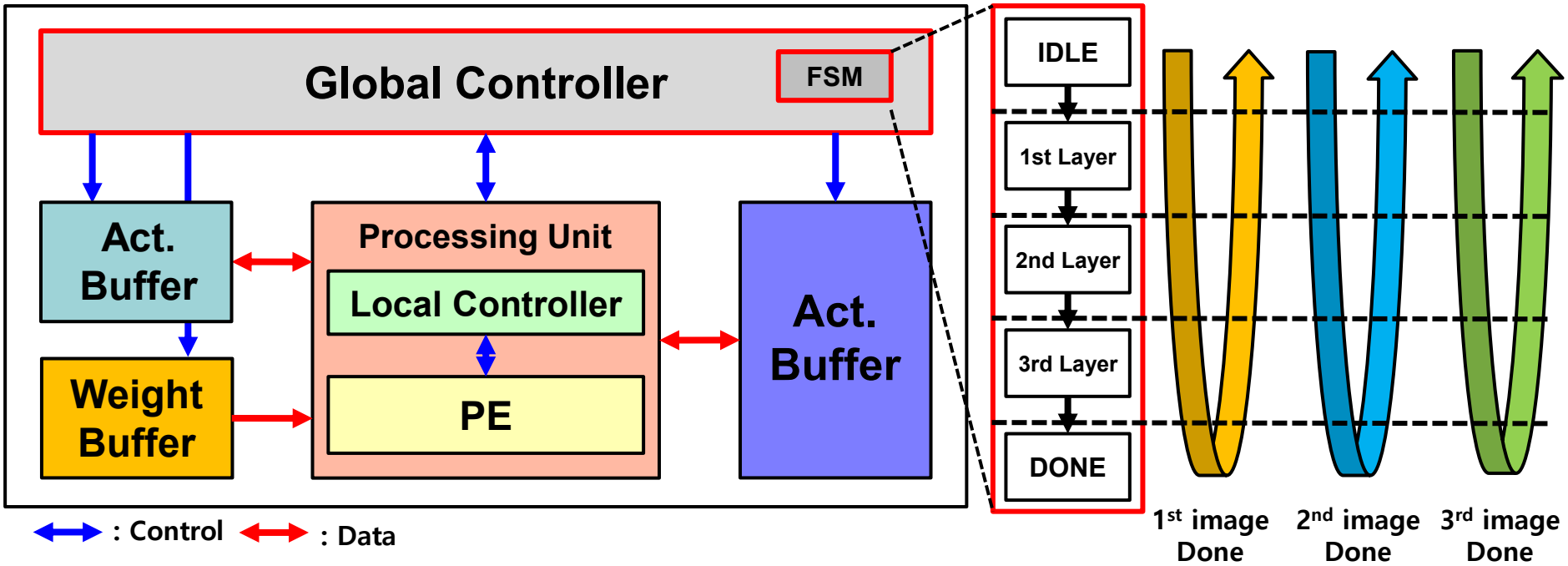

Contents

- Recursive Architecture (Remind)

- Streamline Architecture

Streamline Architecture

AI Accelerator Architecture: Streamline Architecture

- Streamline architecture uses **dedicated PEs for each layer.**
- Inputs are **streamed through the dataflow**, so layers are **processed in parallel.**

Advantages

- It provides **high throughput** through parallel layer processing.
- Memory access optimization can **improve power efficiency.**

Disadvantage

- It requires a **larger hardware area** and a more complex design.
- Frequent external memory access can significantly reduce performance.

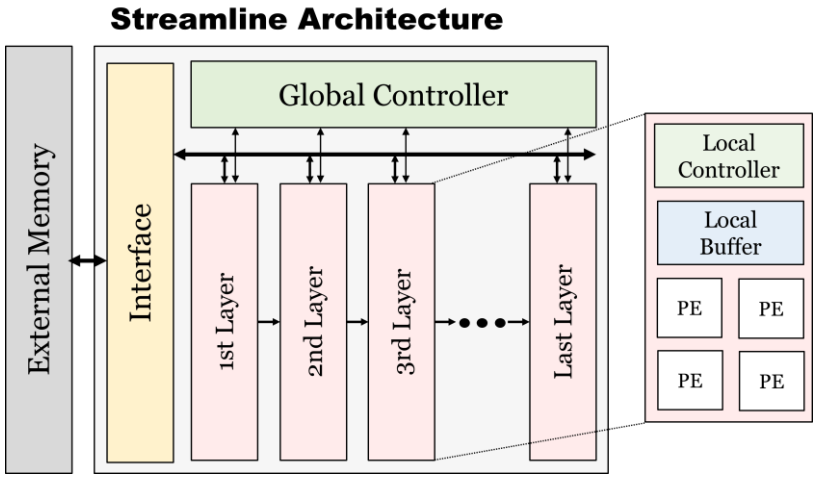

IDSL
Intelligent Digital Systems Design Lab.
SEOULTECH

Streamline Controller

Streamline Accelerator Controller

- Due to large fan-out and the difficulty of managing all processing units (PUs) centrally, **each layer has its own controller**.

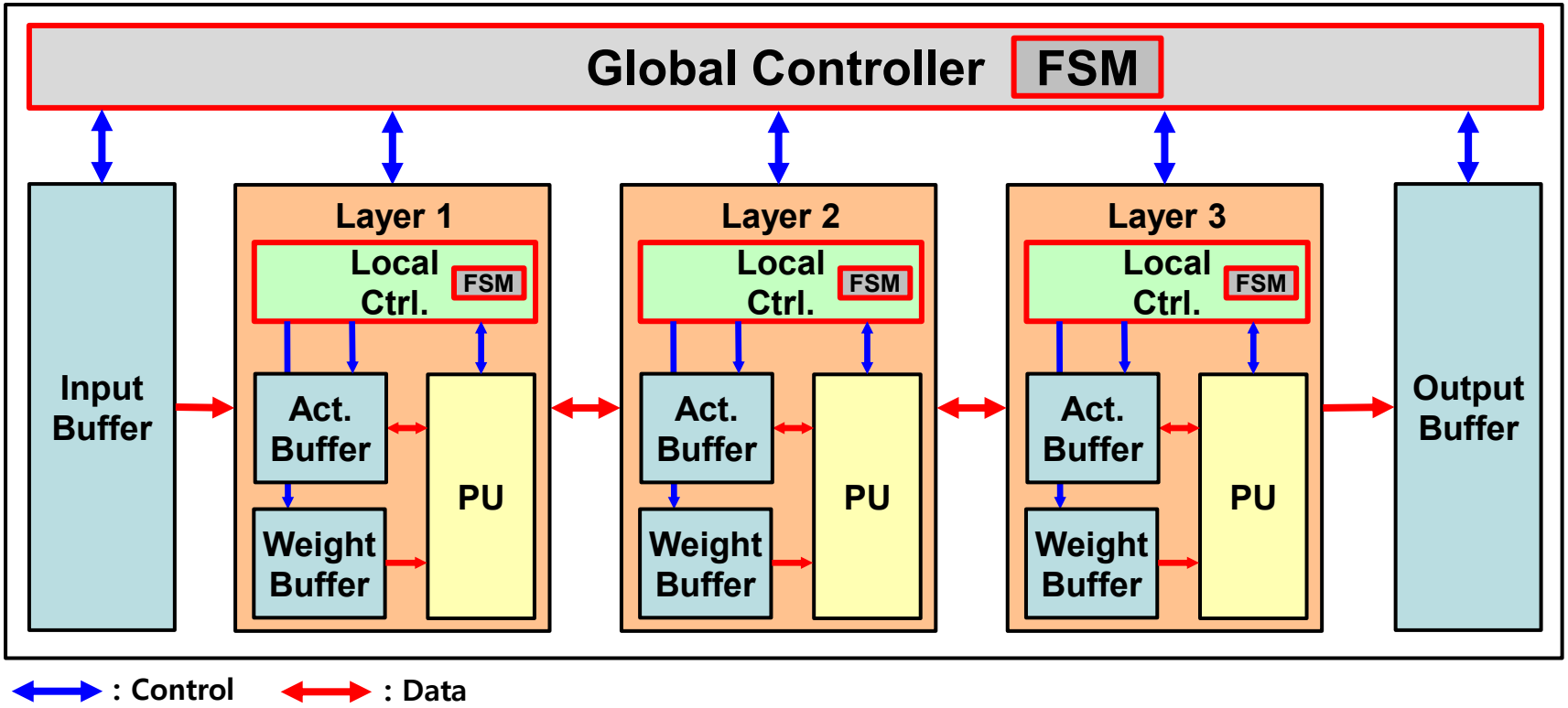

Streamline Processing

Streamline Accelerator Processing

- Input data **is streamed through multiple layers in sequence.**
- Overlapped layer execution improves **throughput, not latency.**

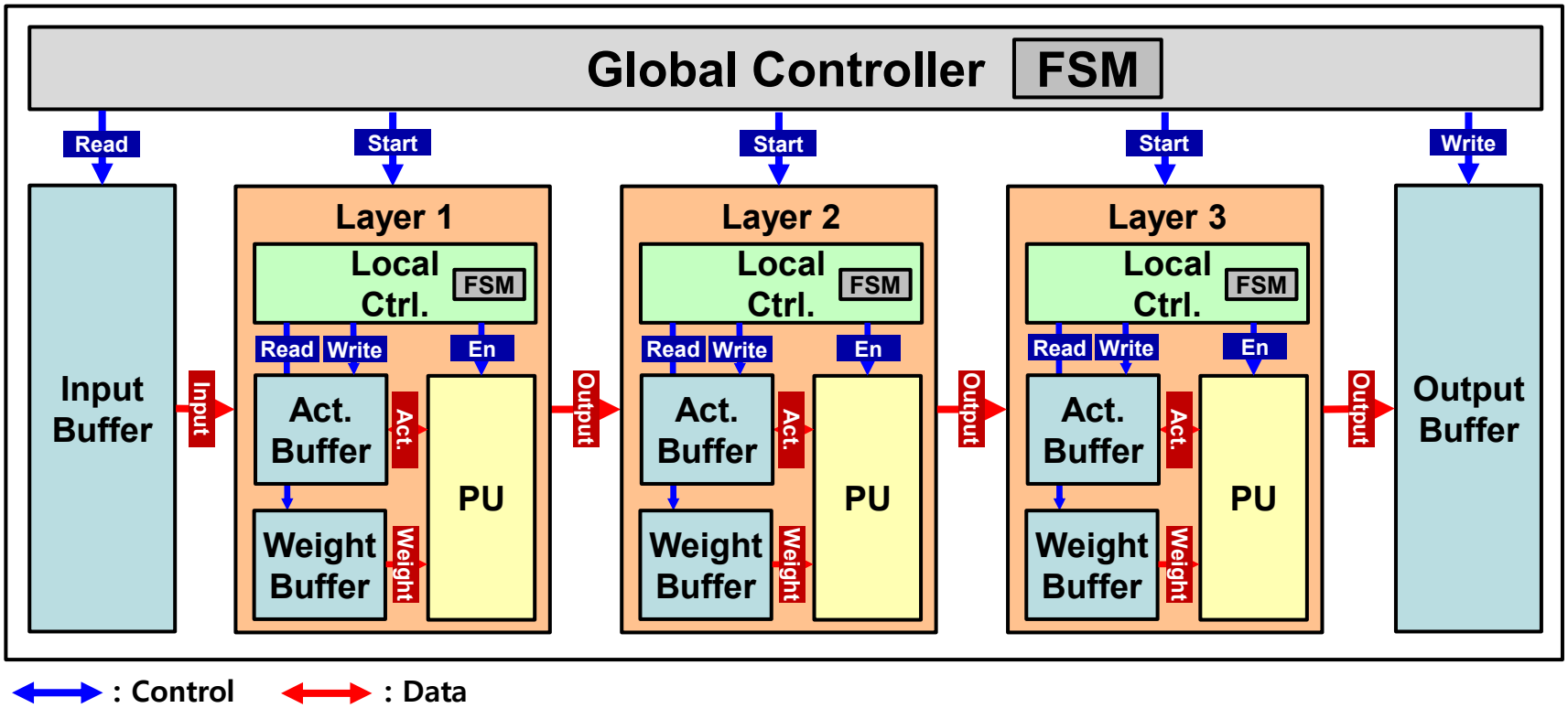

Streamline End-to-End Flow (1)

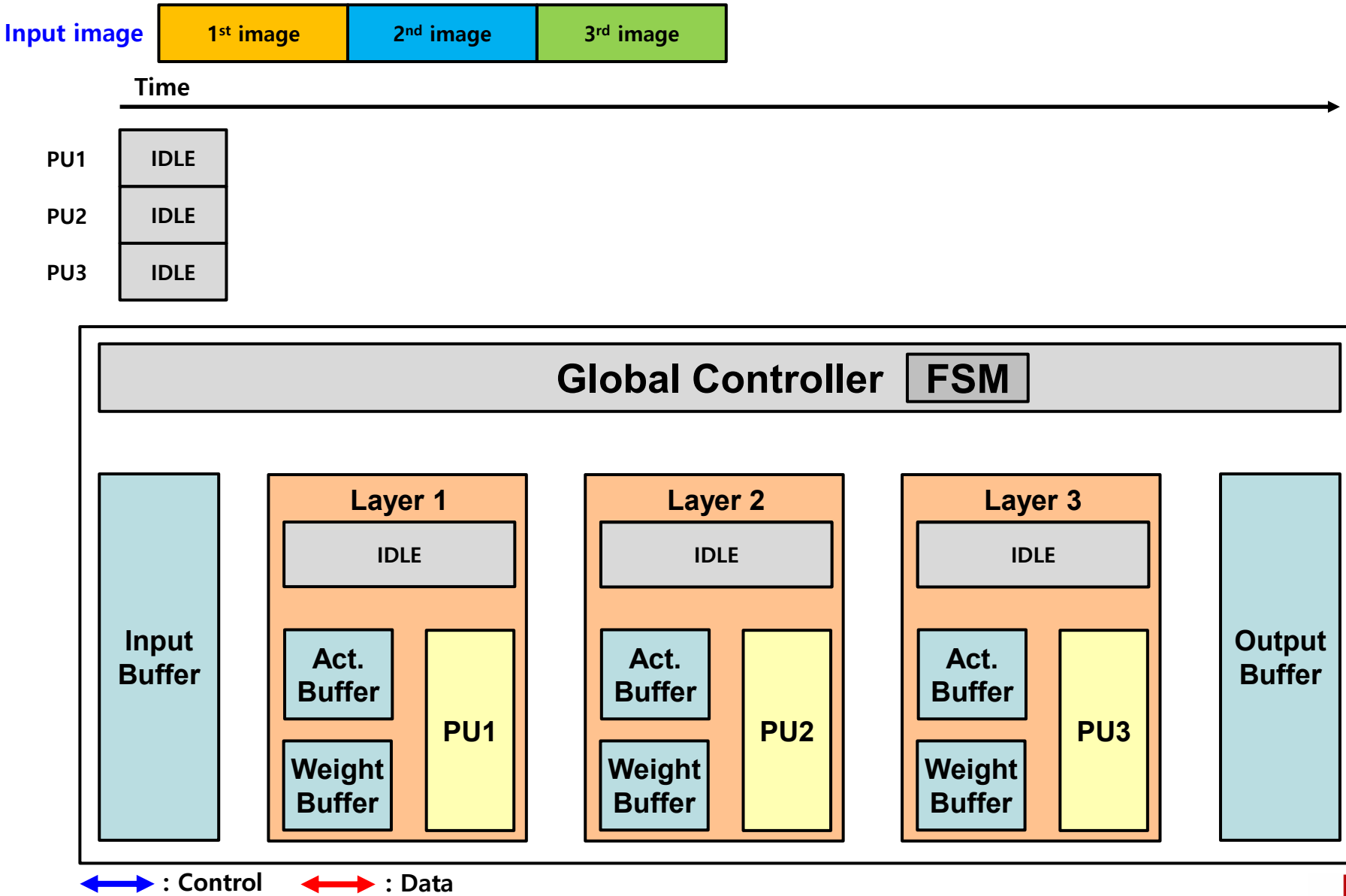

Streamline End-to-End Flow (2)

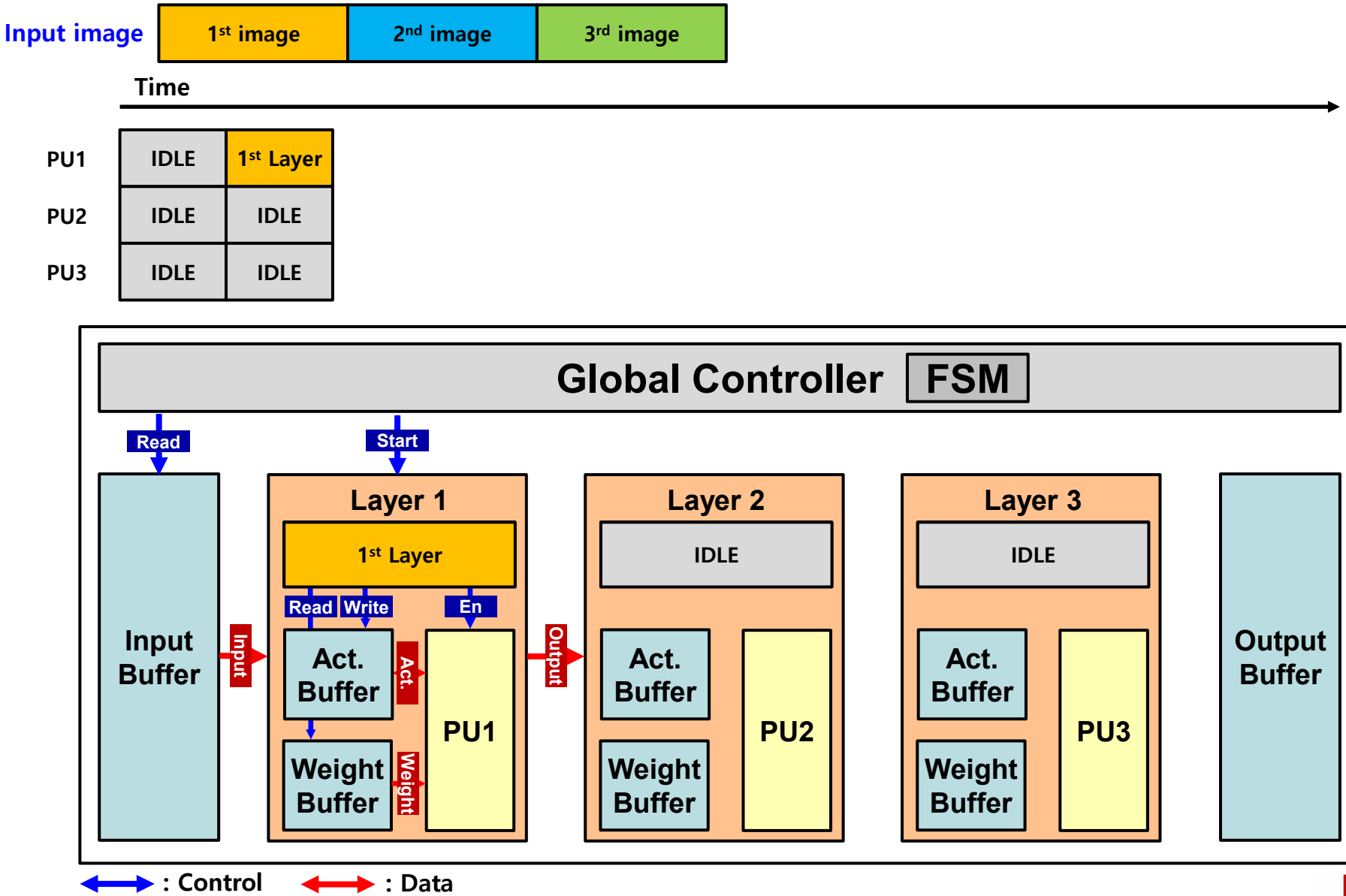

Streamline End-to-End Flow (3)

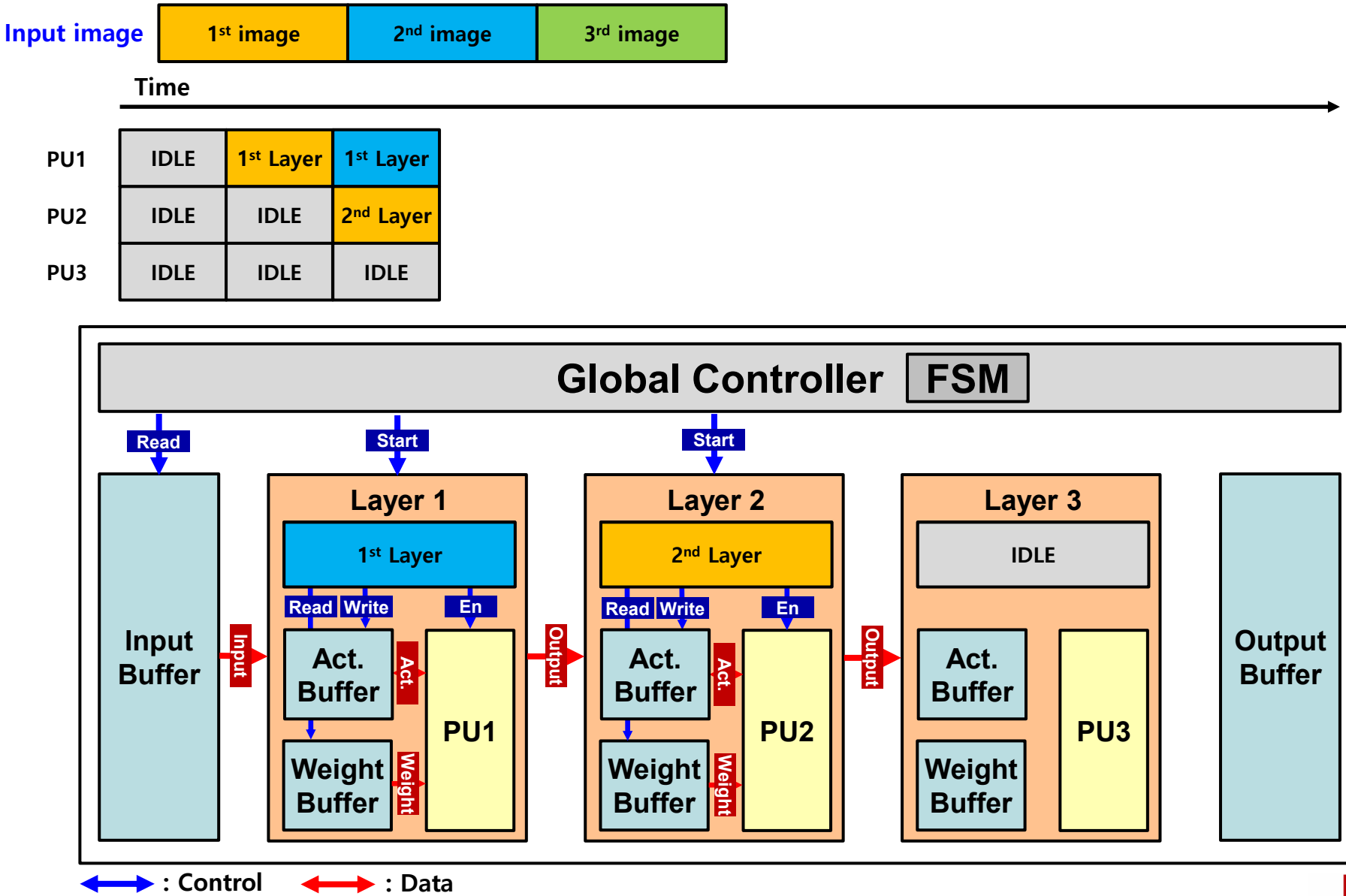

Streamline End-to-End Flow (4)

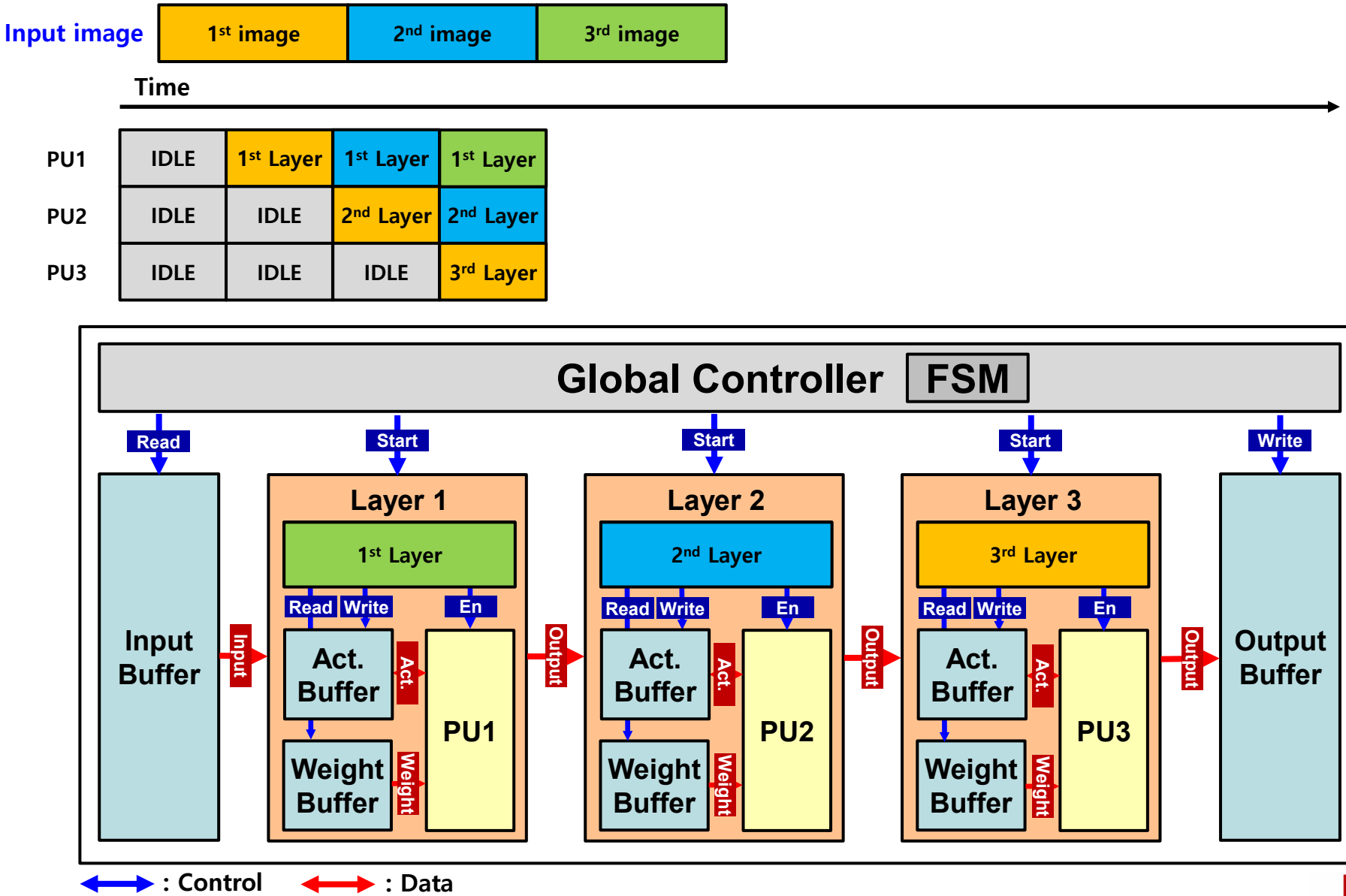

Streamline End-to-End Flow (5)

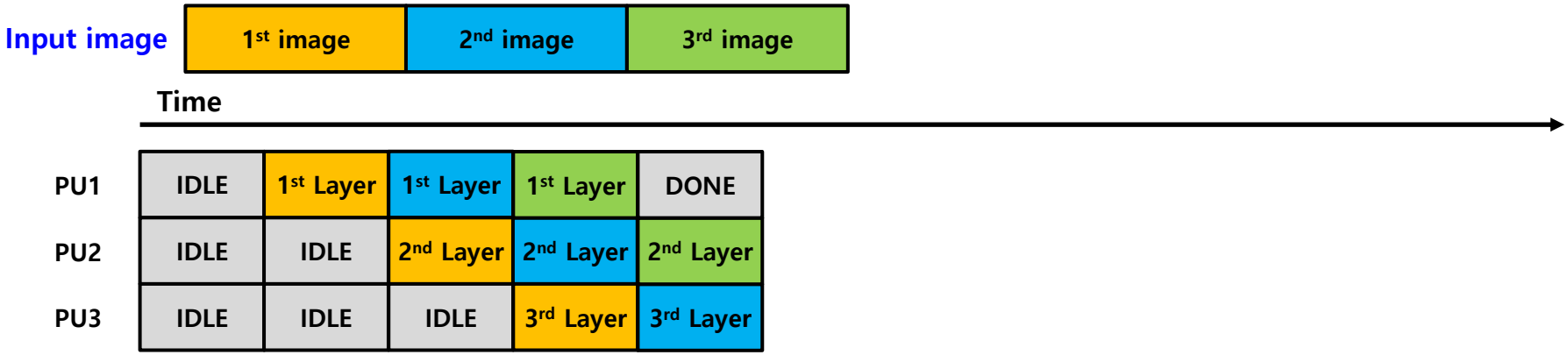

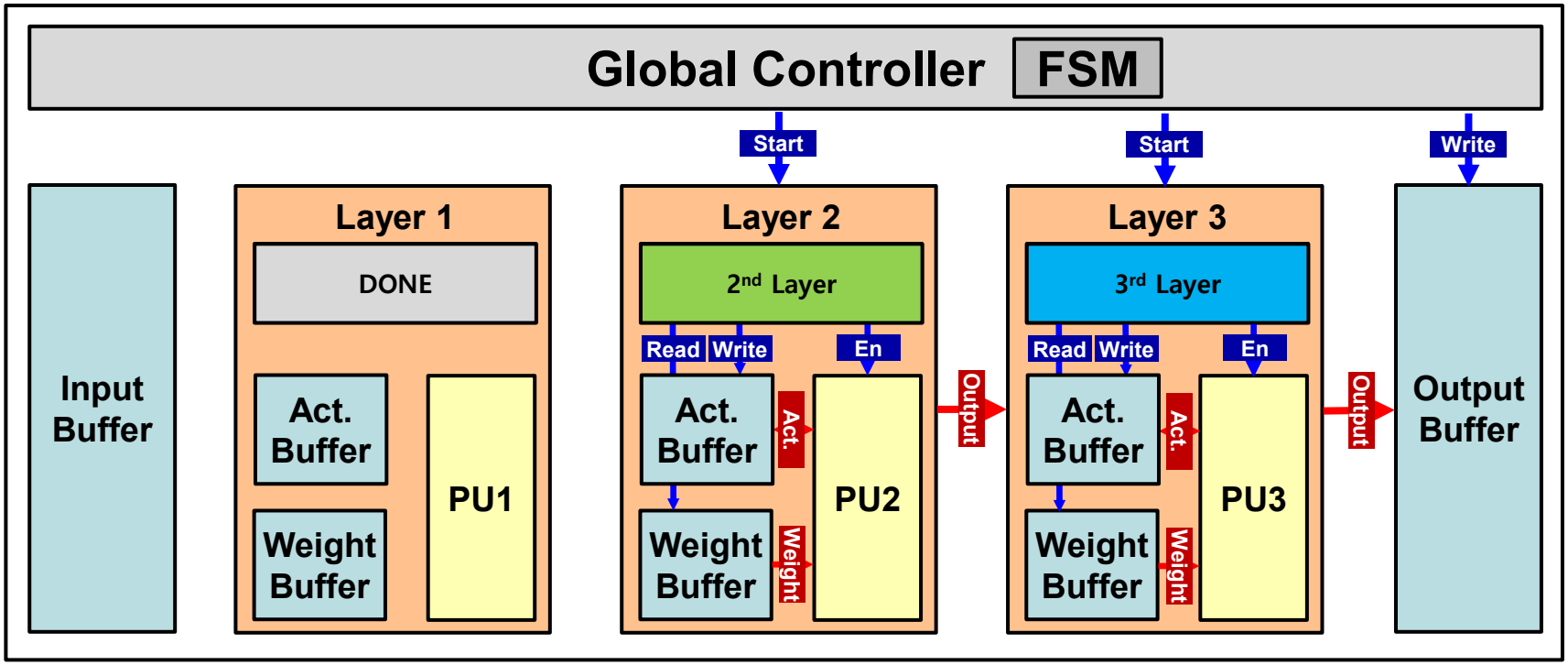

Streamline End-to-End Flow (6)

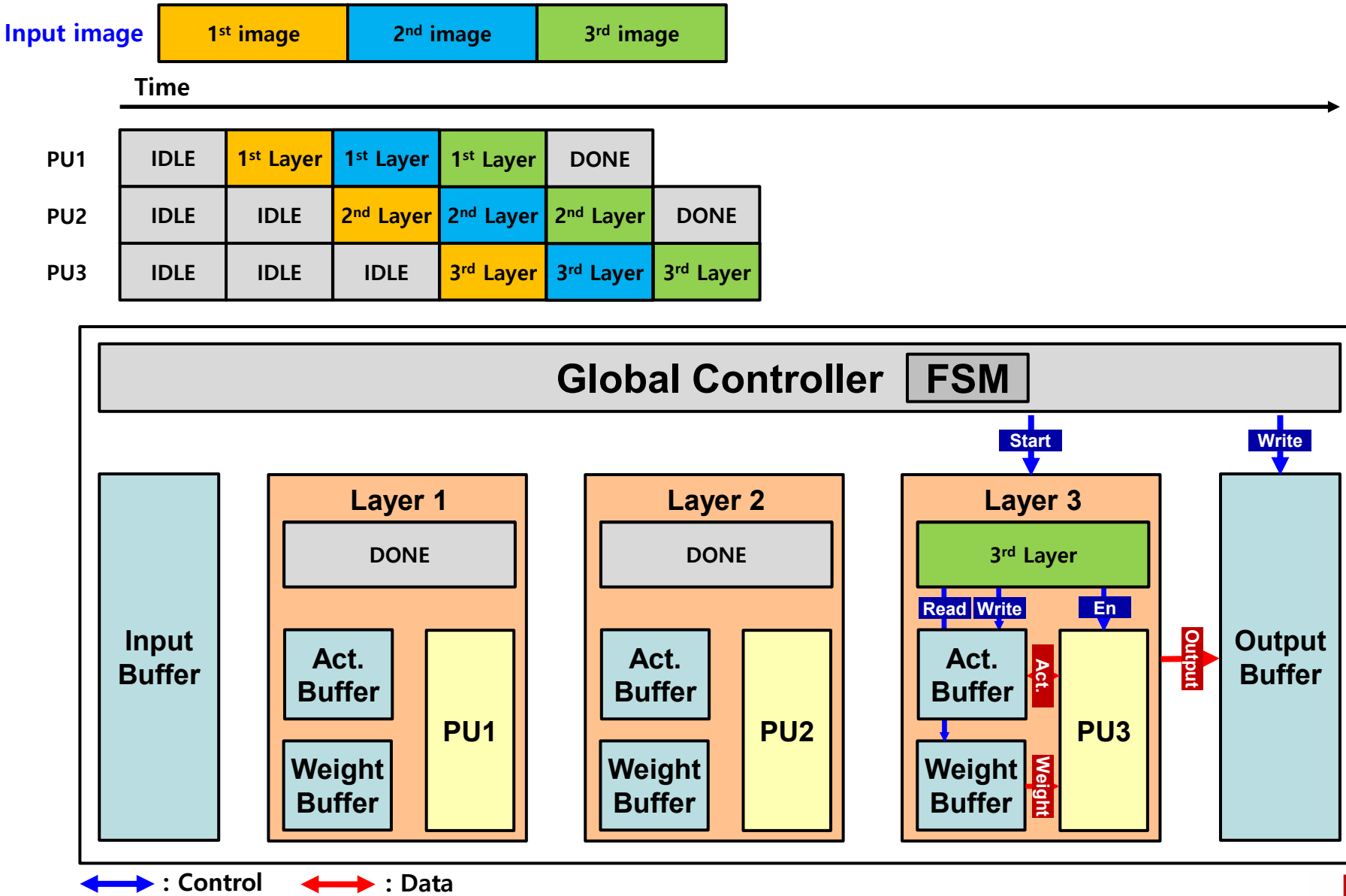

Streamline End-to-End Flow (7)

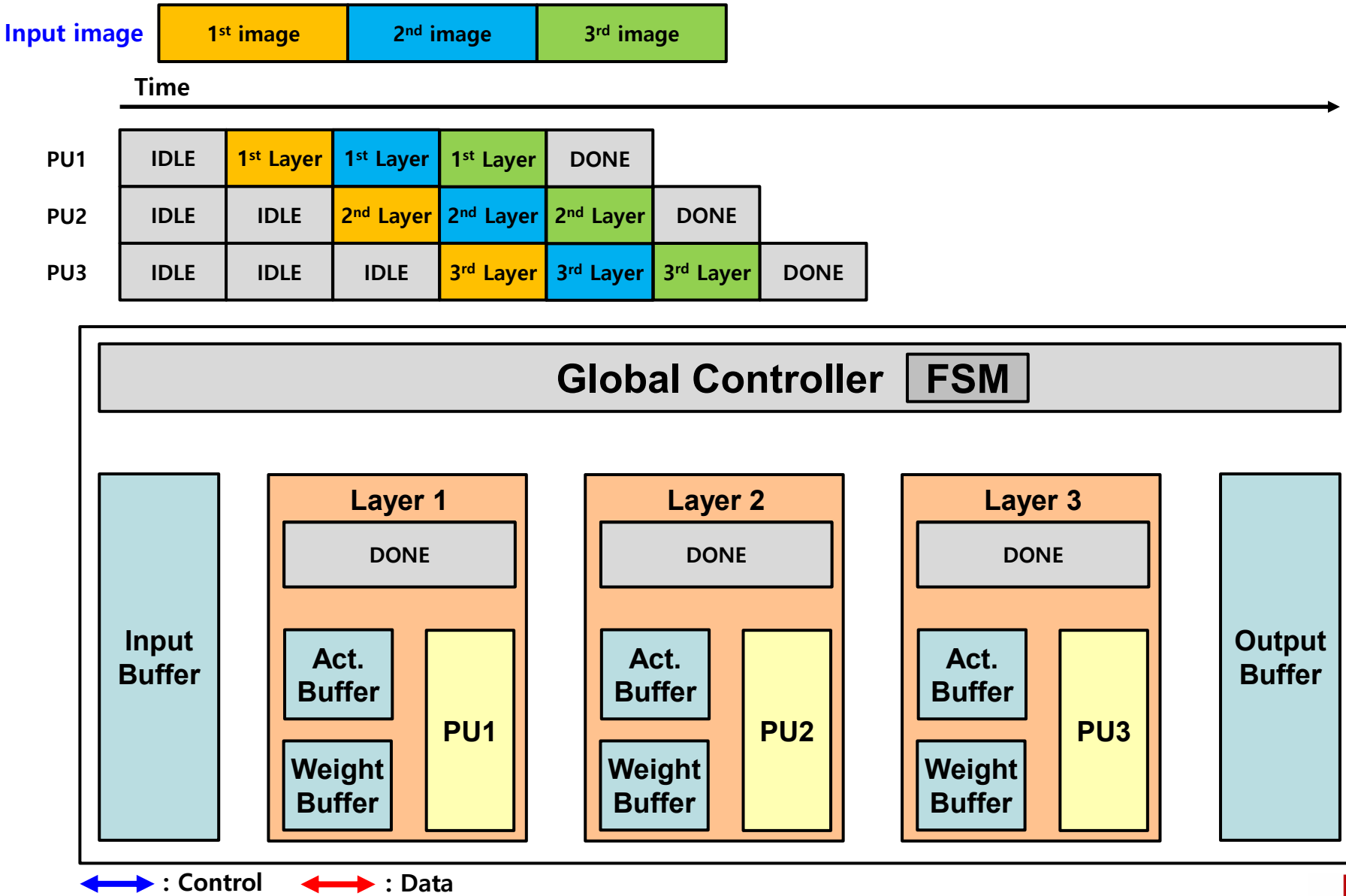

Thank You!