Raspberry Pi 3 Model B+

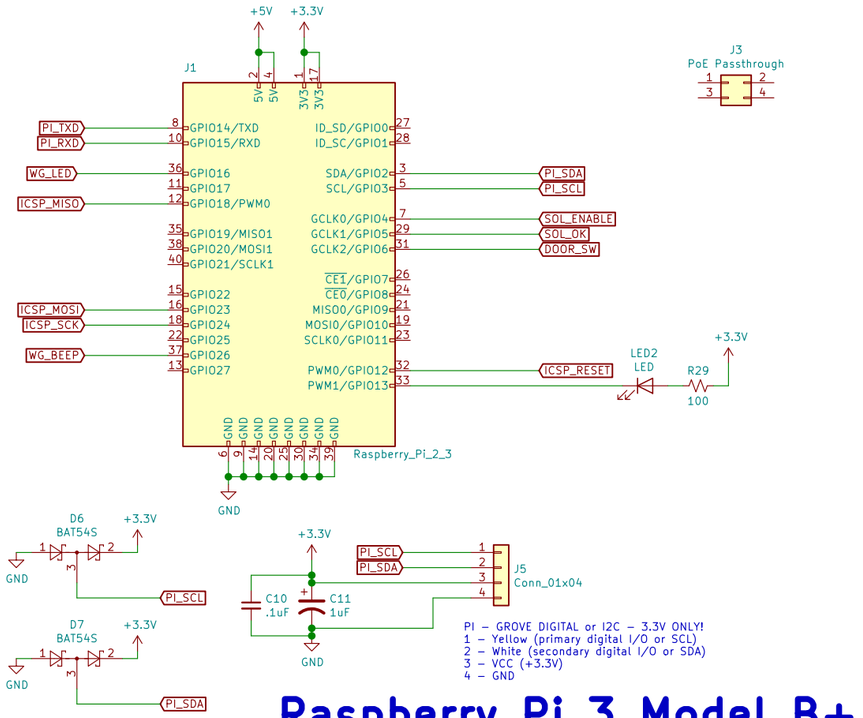

Isolated PWM Solenoid Driver

PWM FREQ – Value of R14 (R_FREQ)
==========
100kHz ... 47.5k ***
50kHz ... 100k
25kHz ... 205k
10kHz ... 523k
5kHz ... 1.07M
500Hz ... 11.3M

PWM DUTY CYCLE (at 100kHz) – Value of R13 (R_PWM)
==========
5% 16.9k
10% 19.1k
20% 22.6k
30% 26.1k
40% 29.4k
50% 33.2k
60% 37.4k
70% 40.2k
80% 44.2k
90% 47.5k
95% 49.9k

DELAY (Initial on @ 100% Duty) – Value of C1 (C_DELAY)
==========
1µs ... Pin 2 Tied to +5V
18µs ... Pin 2 Open
110µs ... 100pF
1.1ms ... 1nF
11ms ... 10nF
110ms ... 100nF
1.1s ... 1µF ***
11s ... 10µF

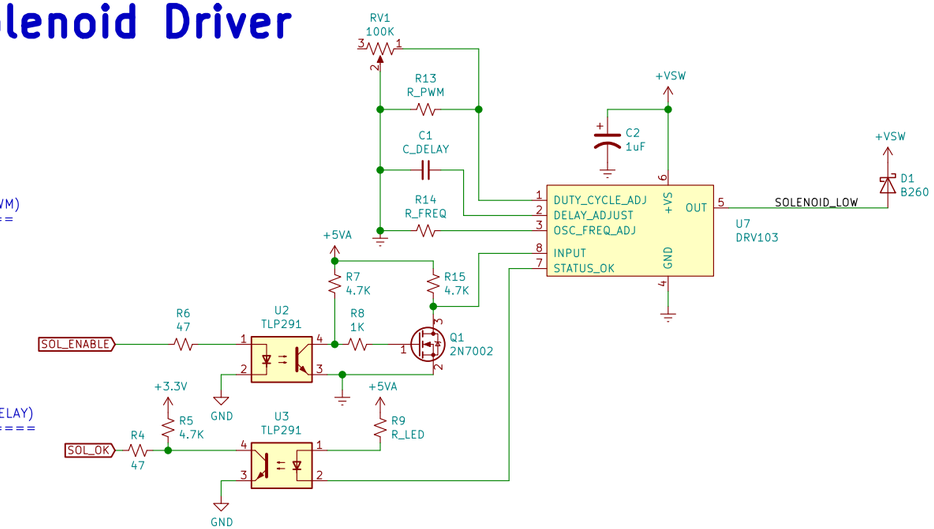

Isolated I/O & Power Supply

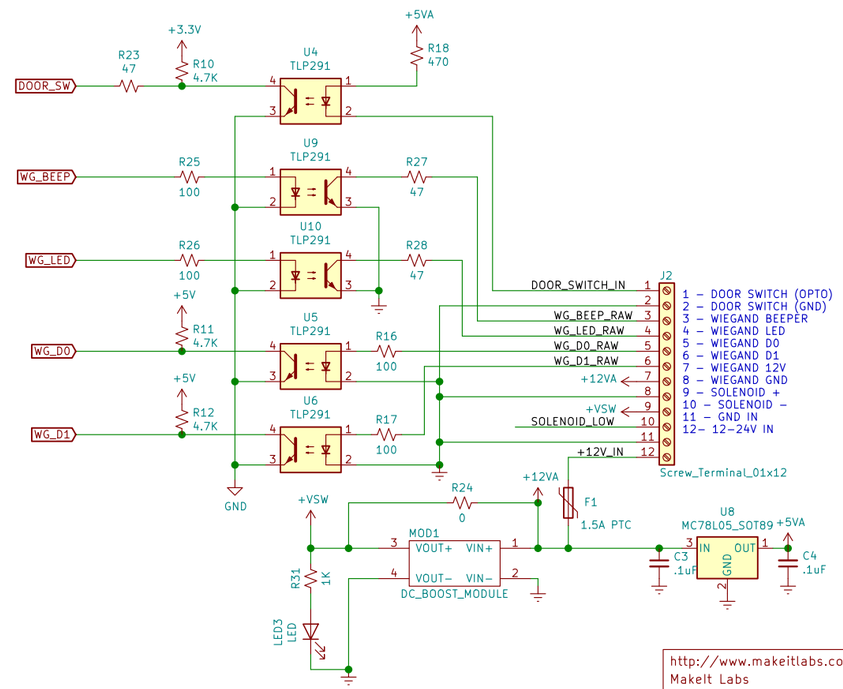

Misc.

Atmega 328P

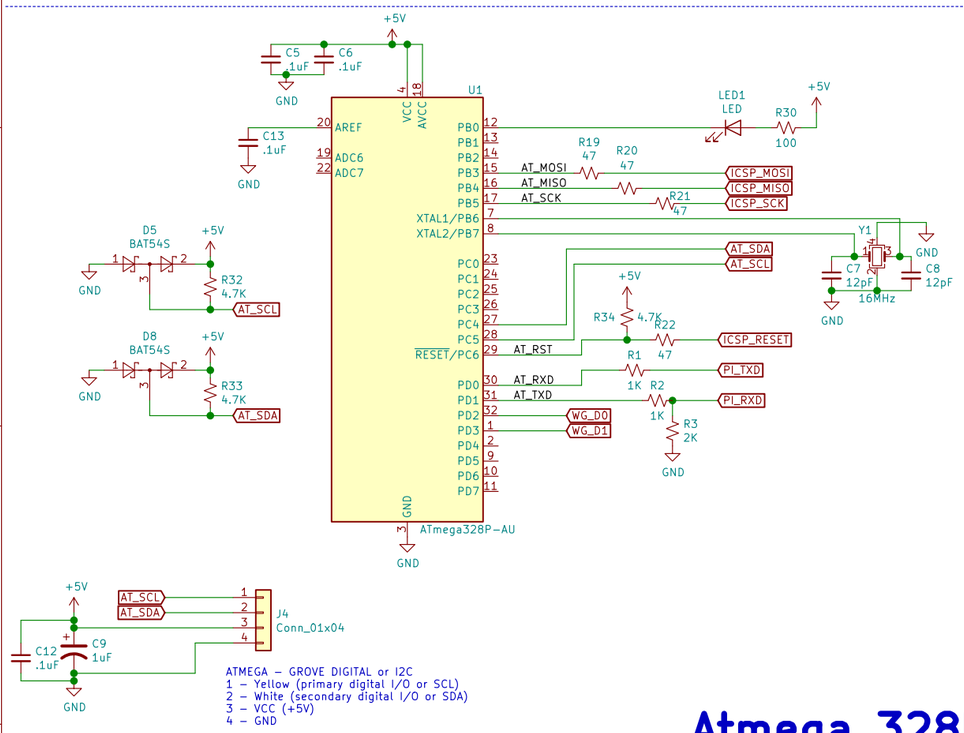

http://www.makeitlabs.com/
MakeIt Labs
25 Crown Street
Nashua, NH 03060-6340
MakeIt Labs – New Hampshire's First & Largest Makerspace

Sheet: /
File: doorbot.sch

Title: MakeIt Labs – RATT/Doorbot

Size: USLedger	Date:	Rev: REV0
KiCad E.D.A. kicad (5.1.0)-1		Id: 1/1

https://learn.adafruit.com/program-an-avr-or-arduino-using-raspberry-pi-gpio-pins/overview