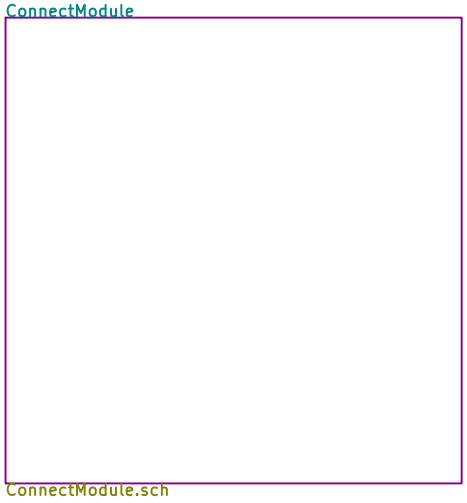

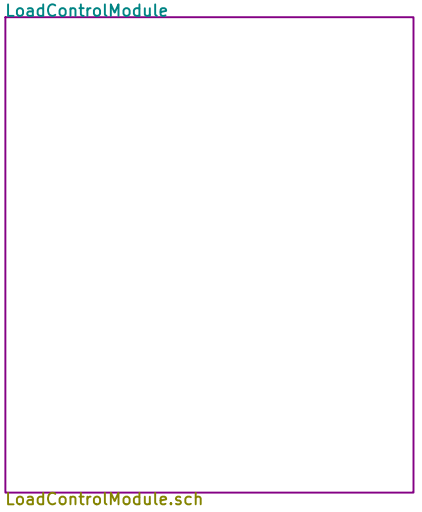

farmerkeith

Sheet: /
File: XL4016X2.sch

Title: XL4016X2

Size: A4	Date: 2018-01-11	**Rev:**
KiCad E.D.A. kicad 4.0.7		Id: 1/4

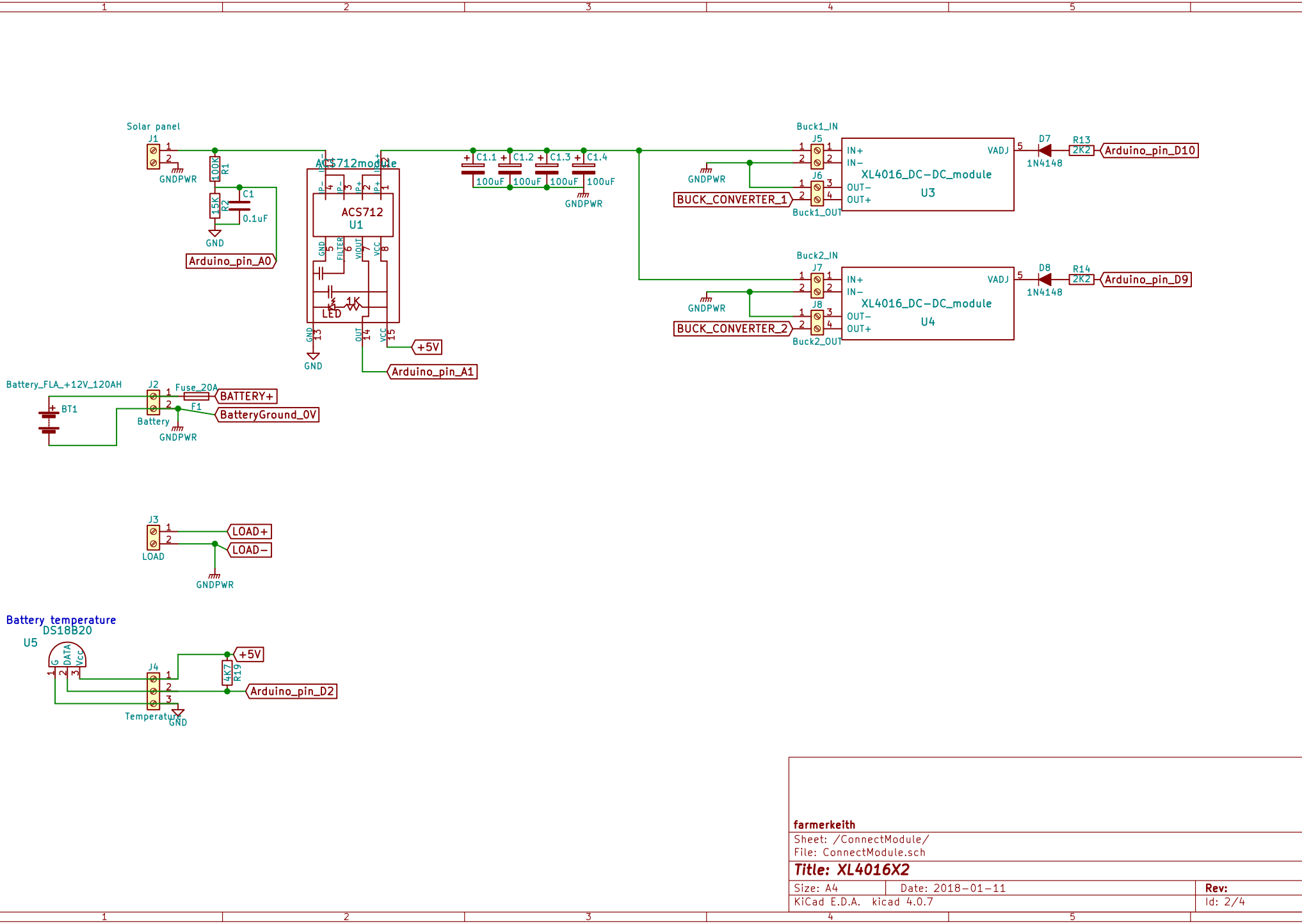
Solar panel
J1
GNDPWR
100K
R1
15K
R2
C1
0.1uF
GND
Arduino_pin_A0
ACS712module
ACS712
U1
LED
1K
GND
+5V
Arduino_pin_A1
C1.1
C1.2
C1.3
C1.4
100uF
GNDPWR
Buck1_IN
J5
J6
IN+
IN−
OUT−
OUT+
VADJ
XL4016_DC−DC_module
U3
BUCK_CONVERTER_1
Buck1_OUT
D7
1N4148
R13
2K2
Arduino_pin_D10
Buck2_IN
J7
J8
U4
BUCK_CONVERTER_2
Buck2_OUT
D8
R14
Arduino_pin_D9
Battery_FLA_+12V_120AH
BT1
J2
Fuse_20A
F1
BATTERY+
BatteryGround_0V
Battery
J3
LOAD
LOAD+
LOAD−
Battery temperature
DS18B20
U5
J4
4K7
R19
Arduino_pin_D2
Temperature
farmerkeith
Sheet: /ConnectModule/
File: ConnectModule.sch
Title: XL4016X2
Size: A4
Date: 2018−01−11
Rev:
KiCad E.D.A. kicad 4.0.7
Id: 2/4

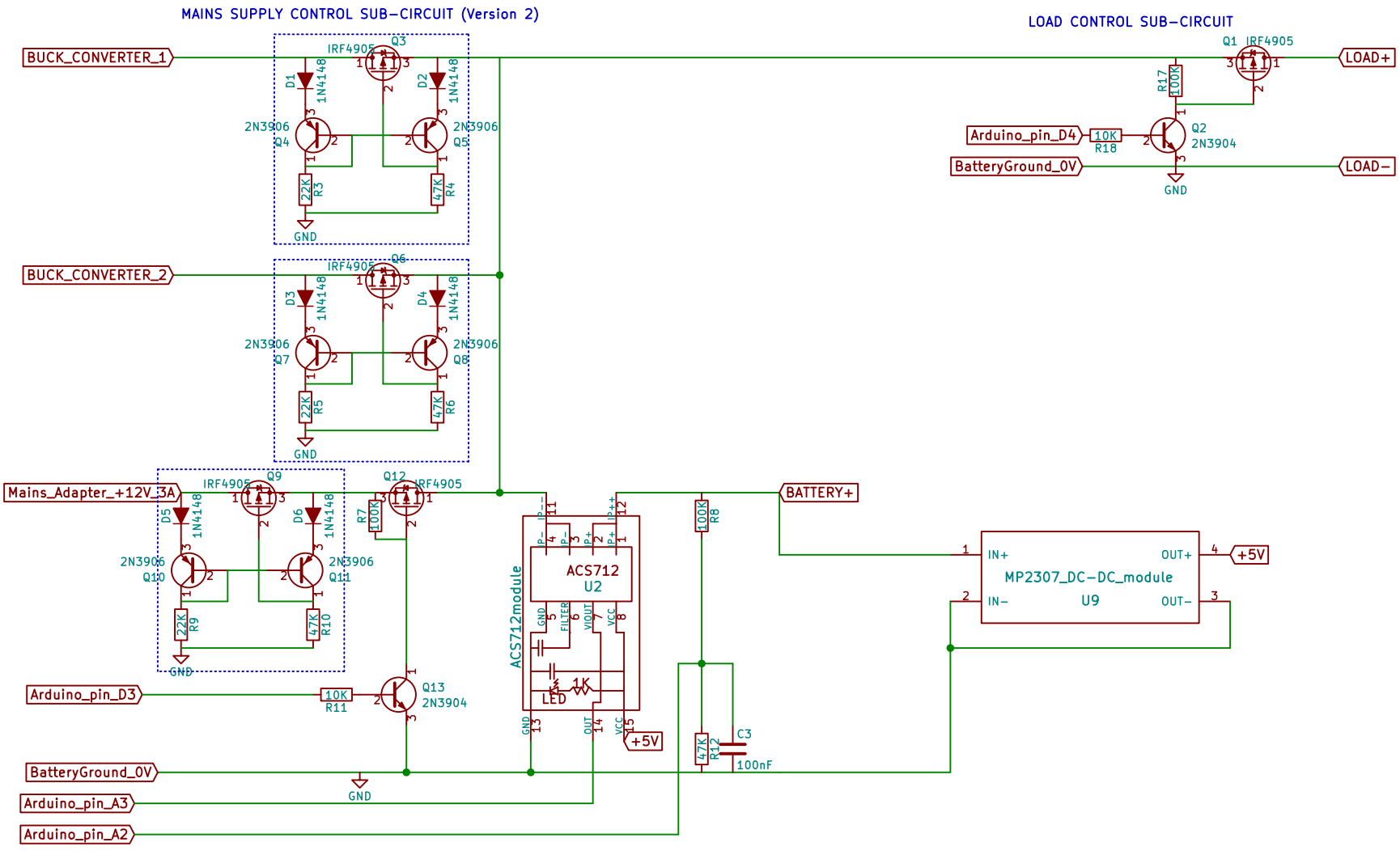

farmerkeith

Sheet: /LoadControlModule/

File: LoadControlModule.sch

Title: XL4016X2

Size: A4	Date: 2018-04-06	**Rev: V3**
KiCad E.D.A. kicad 4.0.7		Id: 3/4

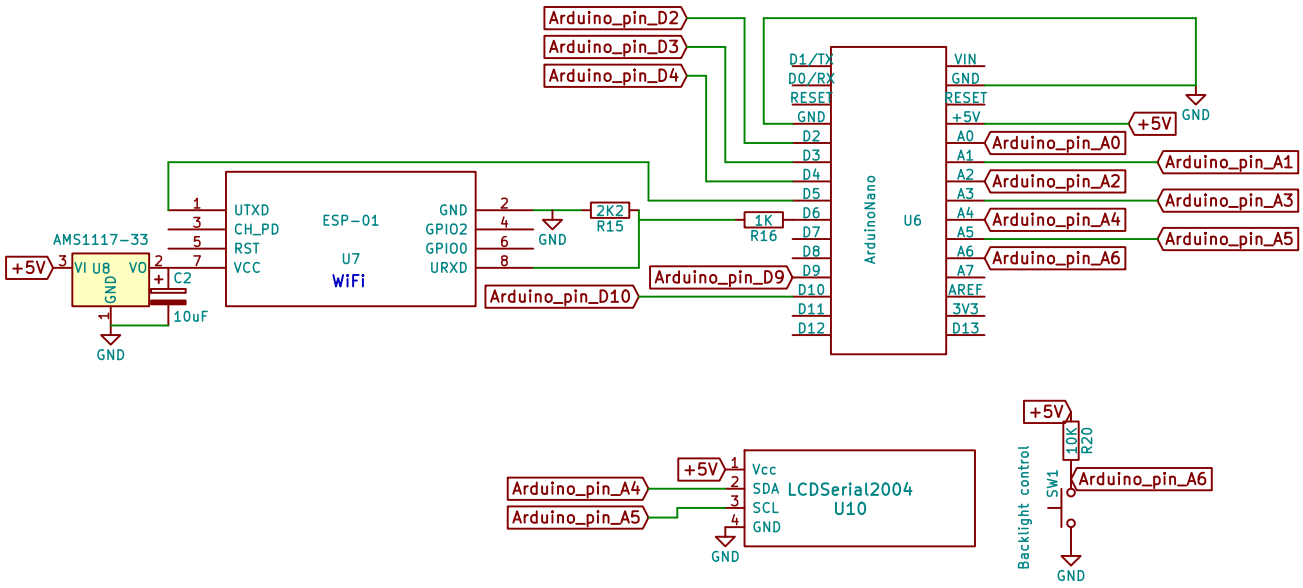

farmerkeith

Sheet: /ControlModule/
File: ControlModule.sch

Title: XL4016X2

Size: A4	Date: 2018-01-11	**Rev:**
KiCad E.D.A. kicad 4.0.7		Id: 4/4