PROPRIETARY AND CONFIDENTIAL
THE INFORMATION CONTAINED IN THIS DRAWING IS THE SOLE PROPERTY OF VECTOR ELECTRONICS & TECH., INC. ANY REPRODUCTION IN PART OR AS A WHOLE WITHOUT THE WRITTEN PERMISSION OF VECTOR ELECTRONICS & TECH., INC. IS PROHIBITED.

REVISIONS

ZONE	REV	DESCRIPTION	DATE	APPROVED
ALL	A	INITIAL RELEASE	05/16/24	

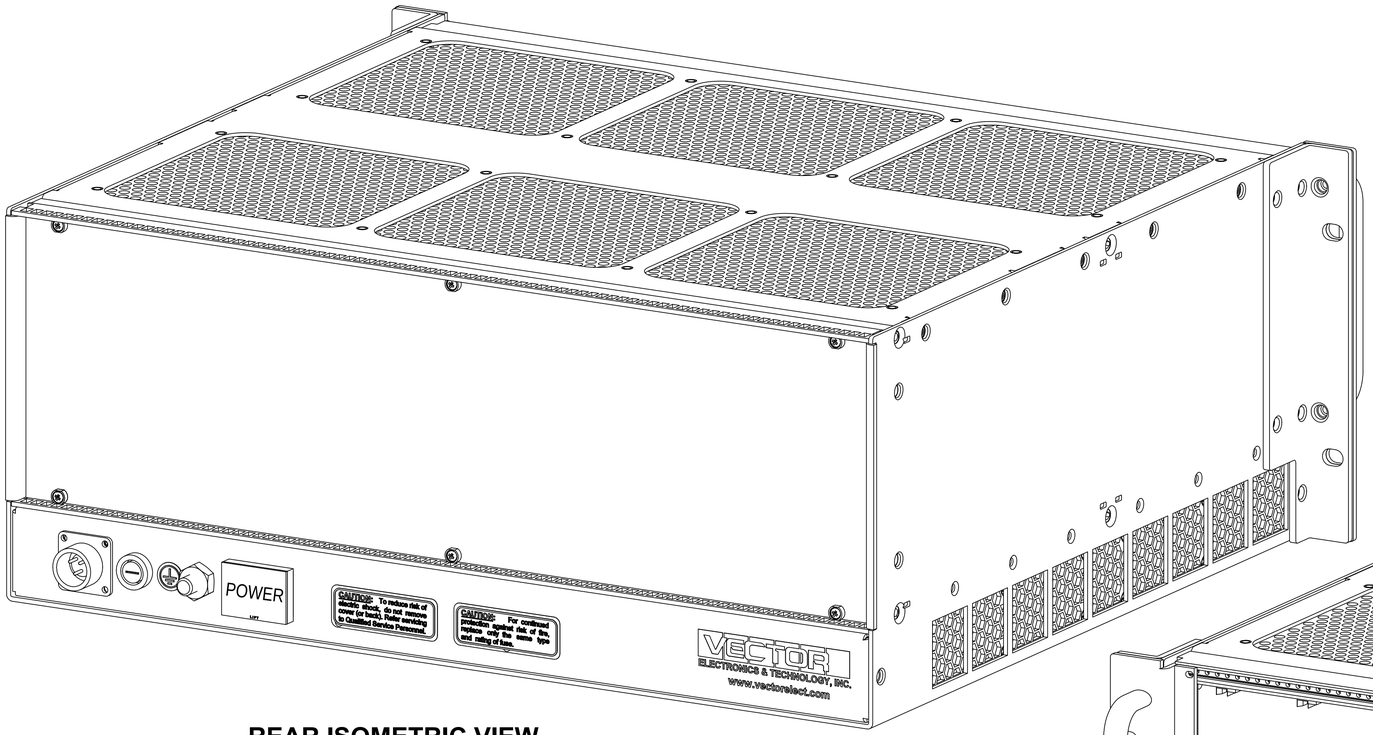

REAR ISOMETRIC VIEW

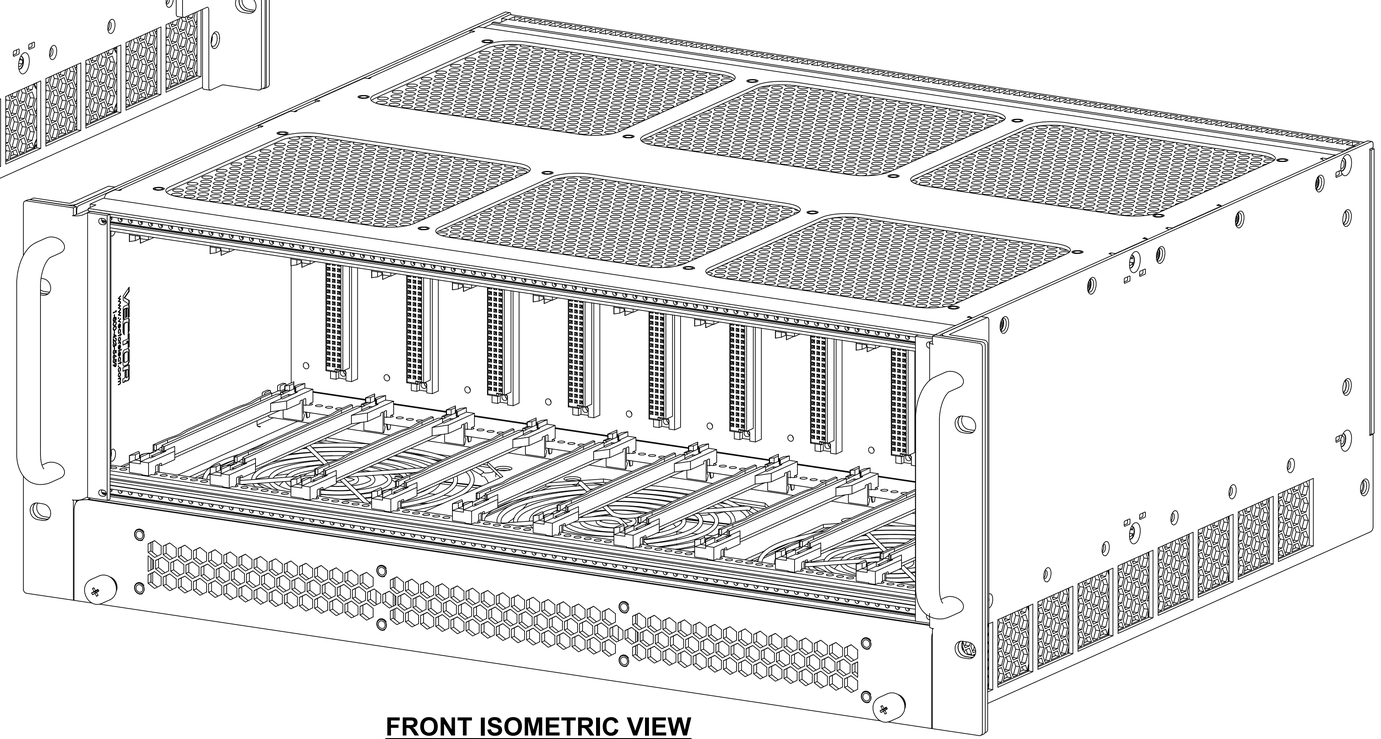

FRONT ISOMETRIC VIEW

6. FINISH FOR STEEL PARTS (BEFORE PAINT)
ZINC PLATE PER ASTM-B-633, TYPE III

5. FINISH FOR ALUMINUM PARTS (BEFORE PAINT)
CLEAR CHEM FILM, IAW MIL-DTL-5541, CLASS 3, TYPE II

4. CARD CAGE COMPLIANT TO IEEE1101.1

3. INTERNAL WIRING NOT SHOWN

2. ALL DIMENSIONS ARE NOMINAL, APPLY BEFORE PAINT

1. CHASSIS PAINT SCHEME (FRONT ONLY) : REFLEX BLUE, RAL 5010

NOTES : UNLESS OTHERWISE SPECIFIED

UNLESS OTHERWISE SPECIFIED
DIMENSIONS ARE IN INCHES
TOLERANCES:
DEC X.X ±0.1
DEC X.XX ±0.03
DEC X.XXX ±0.010
FRACTIONS ±0.050
ANGLES ±1°
GD & T : ASME Y14.5-2009

APPROVALS	NAME	DATE
DRAWN	TRUSHAR	05/16/24
CHECKED		
ENGINEER		
QA		

THIRD ANGLE PROJECTION

VECTOR ELECTRONICS & TECHNOLOGY, INC.
11115 VANOWEN ST., NORTH HOLLYWOOD, CA 91605
www.vectorelect.com

4U VERTICAL STYLE CHASSIS

SIZE	DWG. NO.	REV
D	2345L-0036	A

SCALE: NONE | CAGE CODE: 82893 | SHEET 1 OF 5

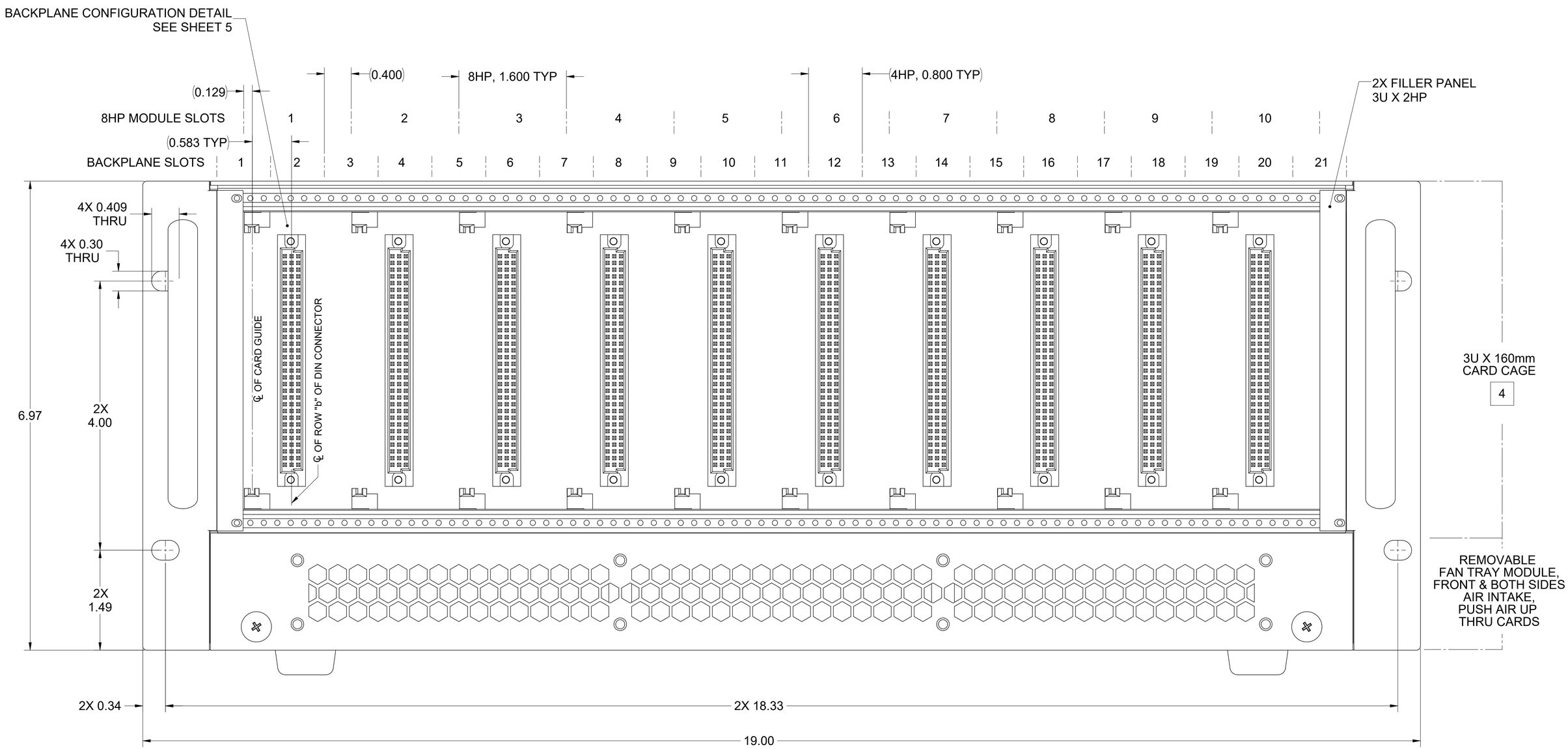

FRONT VIEW

VECTOR ELECTRONICS & TECHNOLOGY, INC.
11115 VANOWEN ST.,
NORTH HOLLYWOOD,
CA 91605
www.vectorelect.com

4U VERTICAL STYLE CHASSIS

SIZE	DWG. NO.	REV
D	2345L-0036	A
SCALE: NONE	CAGE CODE: 82893	SHEET 2 OF 5

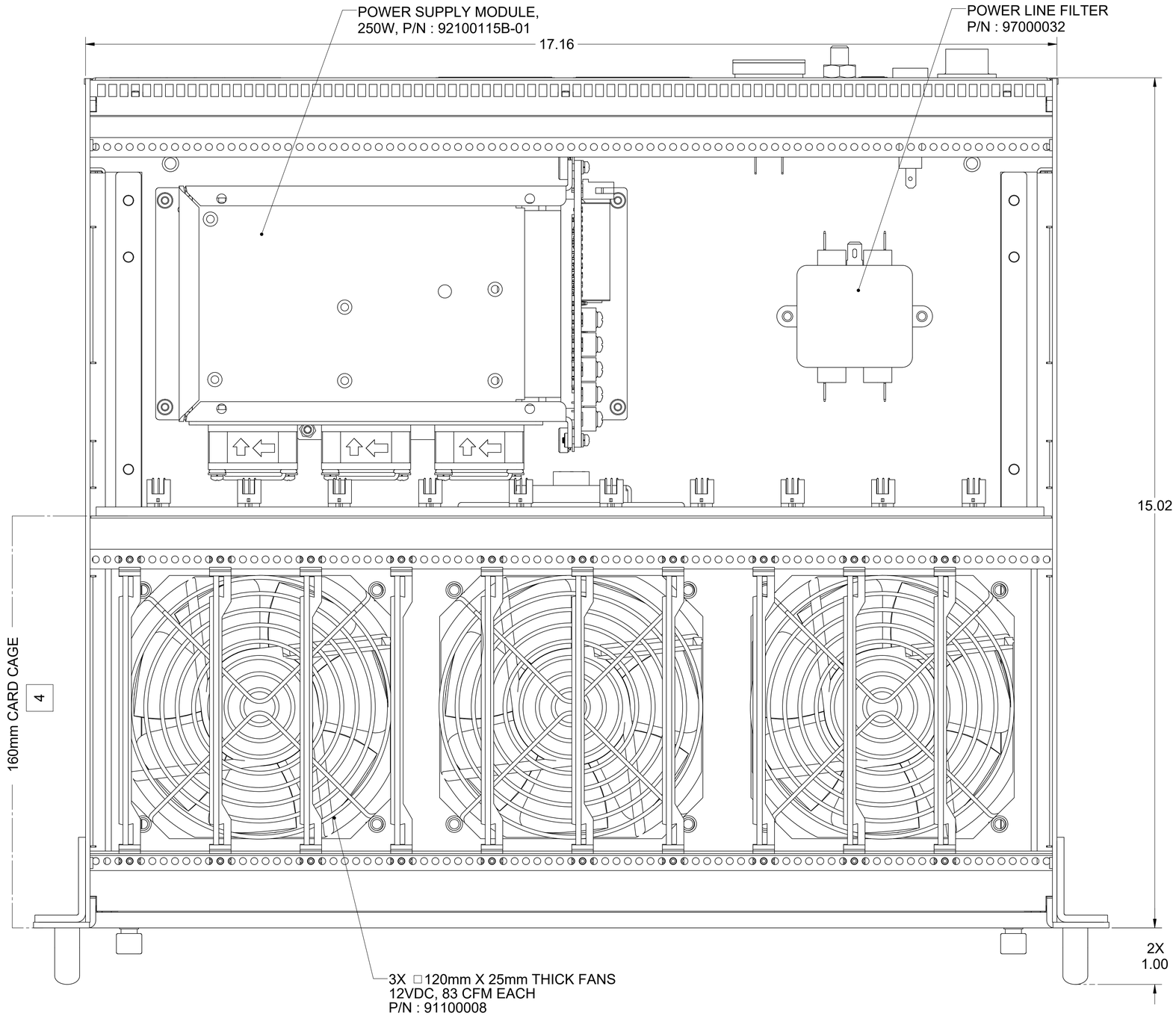

TOP VIEW COVER REMOVED

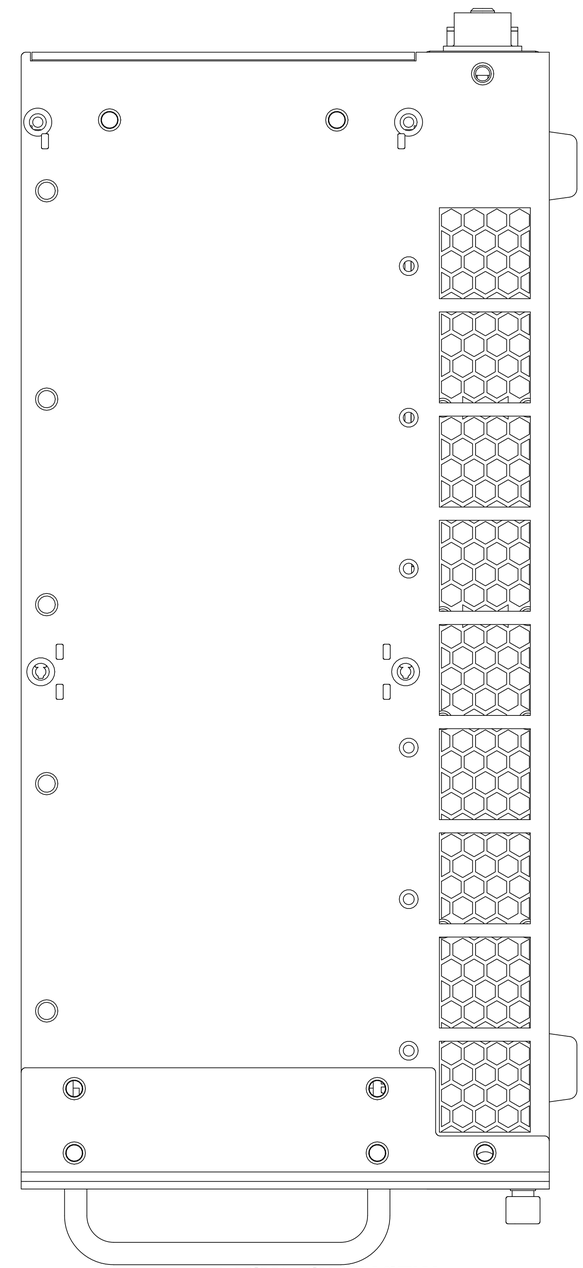

RIGHT SIDE VIEW

VECTOR ELECTRONICS & TECHNOLOGY, INC.
11115 VANOWEN ST.,
NORTH HOLLYWOOD,
CA 91605
www.vectorelect.com

4U VERTICAL STYLE CHASSIS

SIZE	DWG. NO.	REV
D	2345L-0036	A
SCALE: NONE	CAGE CODE: 82893	SHEET 3 OF 5

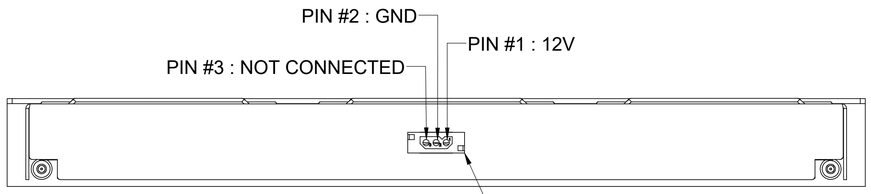

FAN TRAY MODULE REAR VIEW

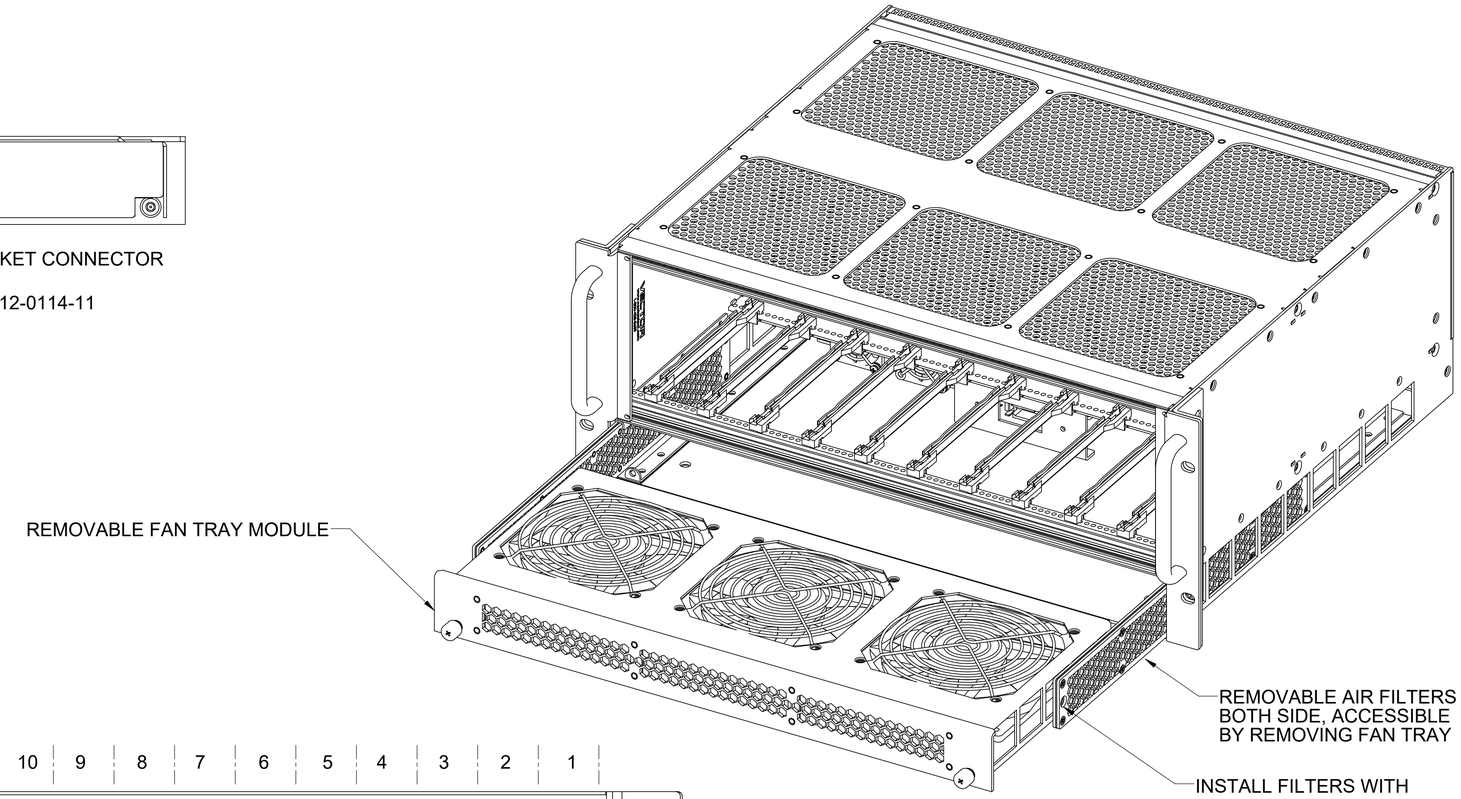

EXPLODED VIEW

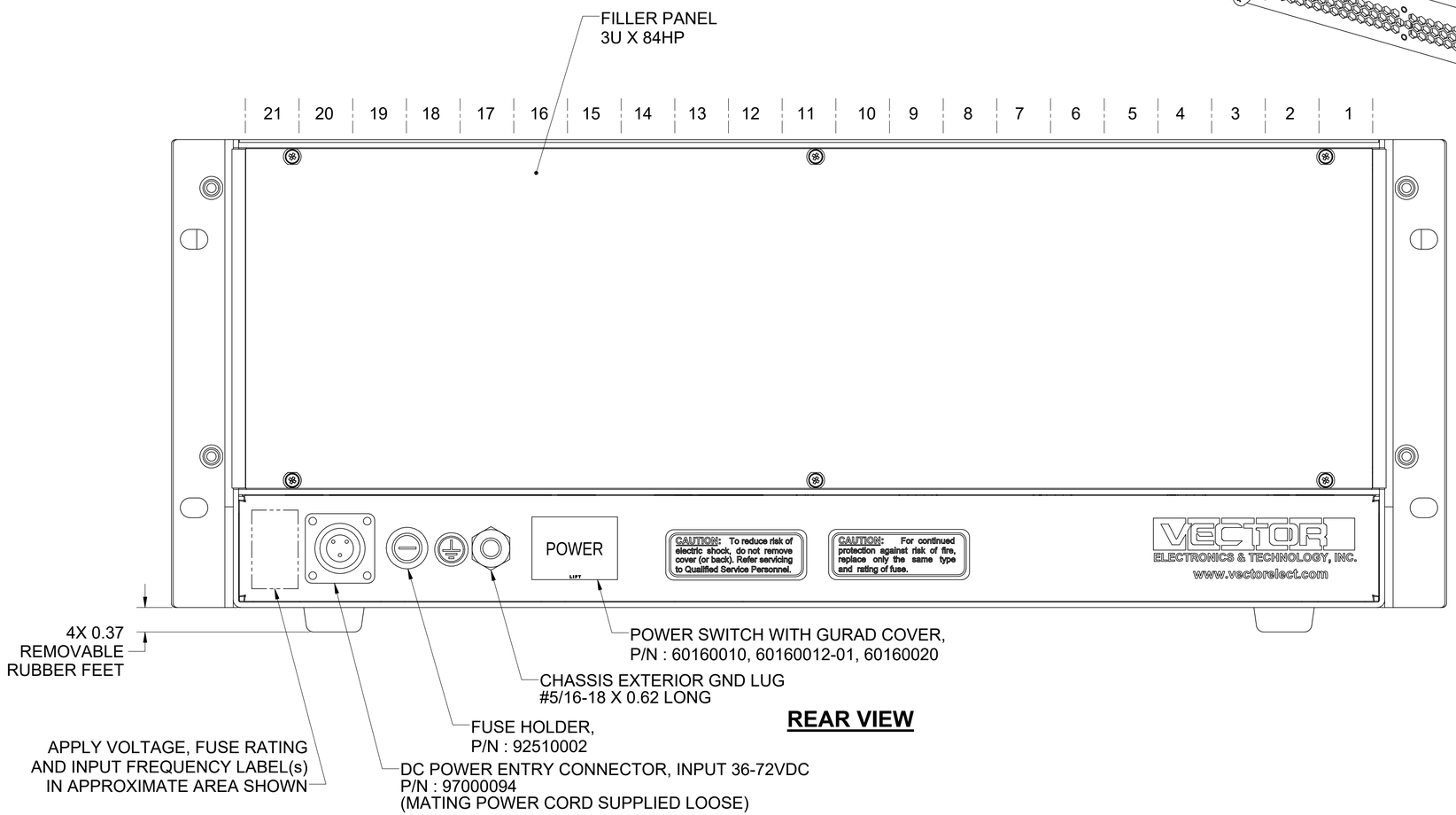

REAR VIEW

VECTOR ELECTRONICS & TECHNOLOGY, INC.
11115 VANOWEN ST.,
NORTH HOLLYWOOD,
CA 91605
www.vectorelect.com

4U VERTICAL STYLE CHASSIS

SIZE	DWG. NO.	REV
D	2345L-0036	A
SCALE: NONE	CAGE CODE: 82893	SHEET 4 OF 5

3U X 21 SLOTS VME J1 BACKPLANE ASSY,
ELCTRONIC BUS GRANT (EBG),
DECOUPLING CAPACITORS.
NO ONBOARD TERMINATION RESISTORS,
SLOTS 2,4,6,8,10,12,14,16,18,20 POPULATED
P/N : (TBD)

(BACKPLANE PCB)

(DIN CONNECTORS, 96 POSITIONS
10 PLACES, PRESS-FIT TYPE)

FRONT VIEW

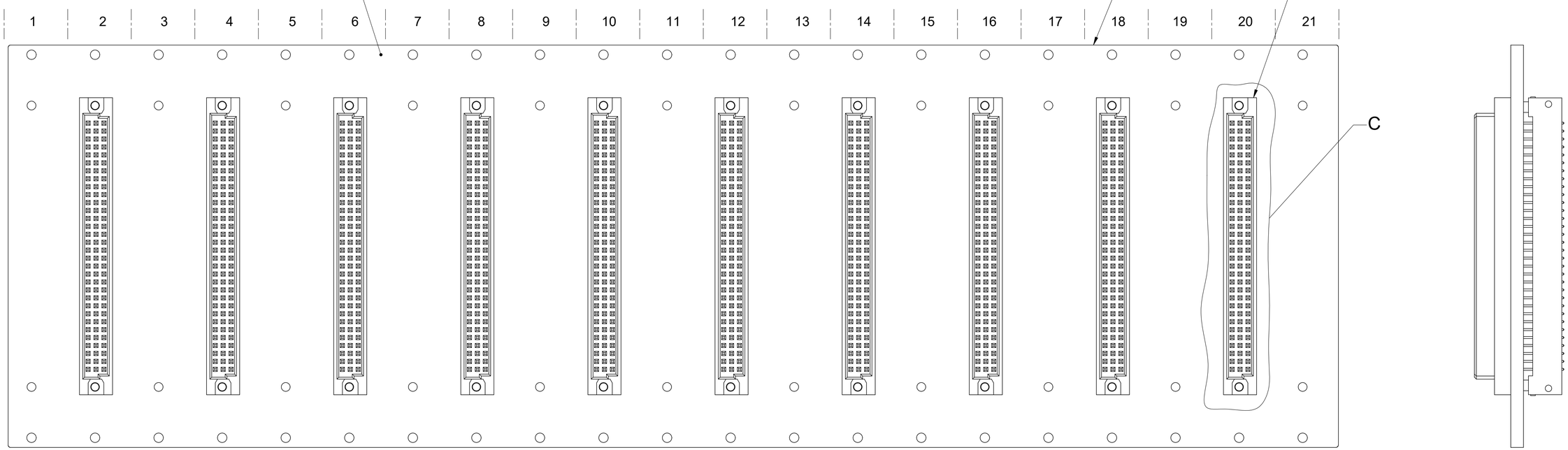

SLOT 2
C16
C17
C18
C19
C20
C21
C22

SLOT 4
C15
C17
C18
C19
C20
C21
C22

SLOT6
C15
C16
C18
C19
C20
C21
C22

SLOT 8
C15
C16
C17
C19
C20
C21
C22

SLOT 10
C15
C16
C17
C18
C20
C21
C22

SLOT 12
C15
C16
C17
C18
C19
C21
C22

SLOT 14
C15
C16
C17
C18
C19
C20
C22

SLOT 16
C15
C16
C17
C18
C19
C20
C21

REMOVED NOTED PINS IN ABOVE TABLE FROM EACH DIN CONNECTORS PRIOR TO PRESS-FITTING CONNECTORS ONTO BACKPLANE PCB

DETAIL C
SCALE 2 : 1
10 PLACES
(DIN CONNECTOR
PIN ASSIGNMENT)

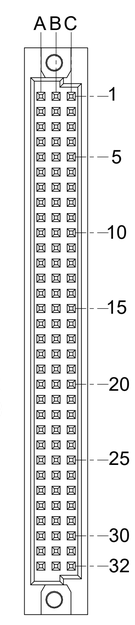

VECTOR ELECTRONICS & TECHNOLOGY, INC.
11115 VANOWEN ST.,
NORTH HOLLYWOOD,
CA 91605
www.vectorelect.com

4U VERTICAL STYLE CHASSIS

SIZE	DWG. NO.	REV
D	2345L-0036	A
SCALE: NONE	CAGE CODE: 82893	SHEET 5 OF 5