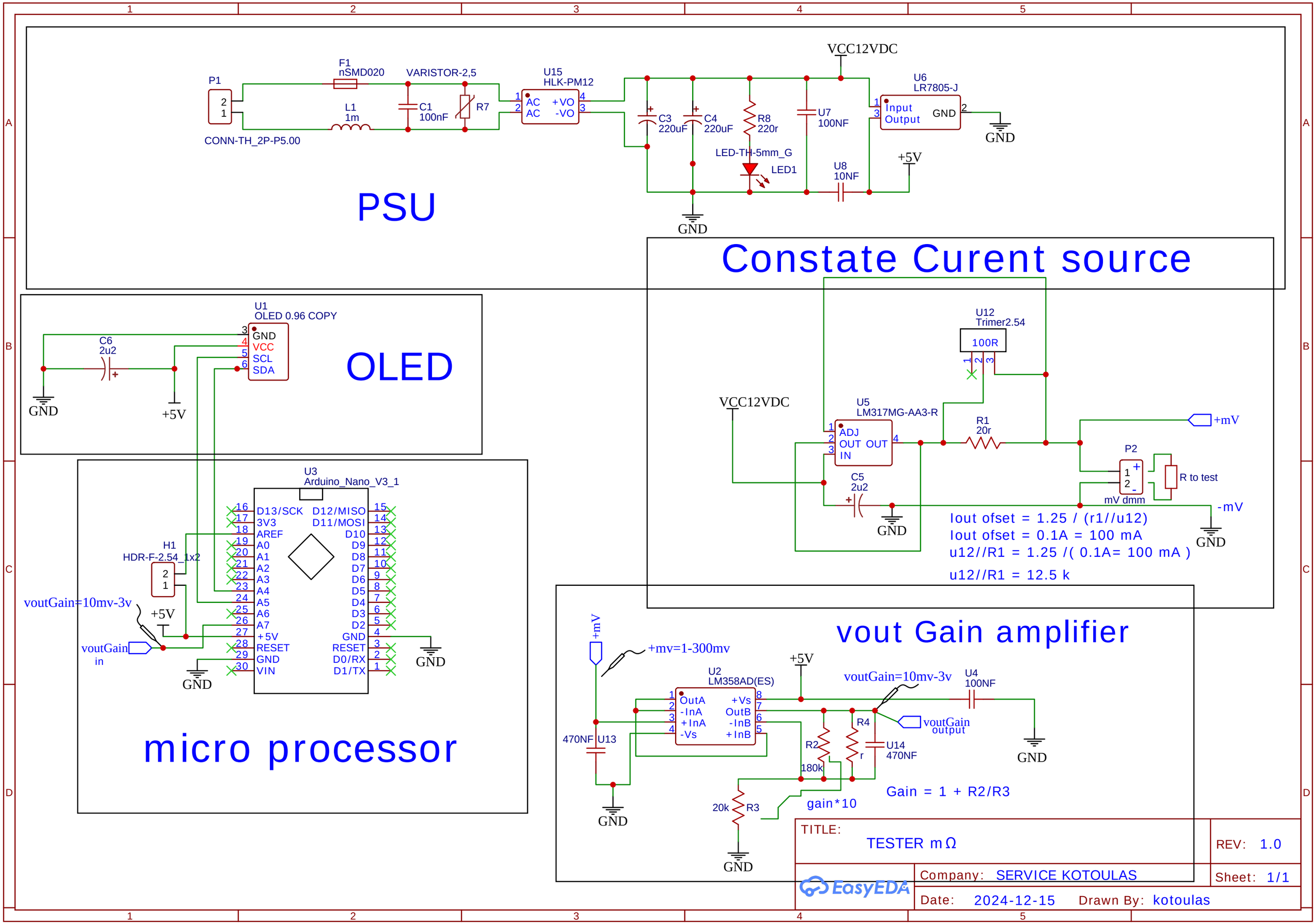
PSU
P1
CONN-TH_2P-P5.00
F1
nSMD020
L1
1m
VARISTOR-2,5
C1
100nF
R7
U15
HLK-PM12
AC
AC
+VO
-VO
C3
220uF
C4
220uF
R8
220r
LED-TH-5mm_G
LED1
U7
100NF
U8
10NF
VCC12VDC
U6
LR7805-J
Input
Output
GND
+5V
GND
Constate Curent source
U12
Trimer2.54
100R
U5
LM317MG-AA3-R
ADJ
OUT
OUT
IN
R1
20r
C5
2u2
+mV
-mV
P2
mV dmm
R to test
Iout ofset = 1.25 / (r1//u12)
Iout ofset = 0.1A = 100 mA
u12//R1 = 1.25 /(0.1A= 100 mA)
u12//R1 = 12.5 k
OLED
U1
OLED 0.96 COPY
GND
VCC
SCL
SDA
C6
2u2
+5V
micro processor
U3
Arduino_Nano_V3_1
D13/SCK
3V3
AREF
A0
A1
A2
A3
A4
A5
A6
A7
+5V
RESET
GND
VIN
D12/MISO
D11/MOSI
D10
D9
D8
D7
D6
D5
D4
D3
D2
GND
RESET
D0/RX
D1/TX
H1
HDR-F-2.54_1x2
voutGain=10mv-3v
voutGain
in
vout Gain amplifier
+mV
+mv=1-300mv
U2
LM358AD(ES)
OutA
-InA
+InA
-Vs
+Vs
OutB
-InB
+InB
470NF U13
voutGain=10mv-3v
U4
100NF
voutGain
output
R2
180k
R4
r
U14
470NF
20k
R3
gain*10
Gain = 1 + R2/R3
TITLE:
TESTER mΩ
REV: 1.0
Company: SERVICE KOTOULAS
Sheet: 1/1
Date: 2024-12-15
Drawn By: kotoulas
EasyEDA