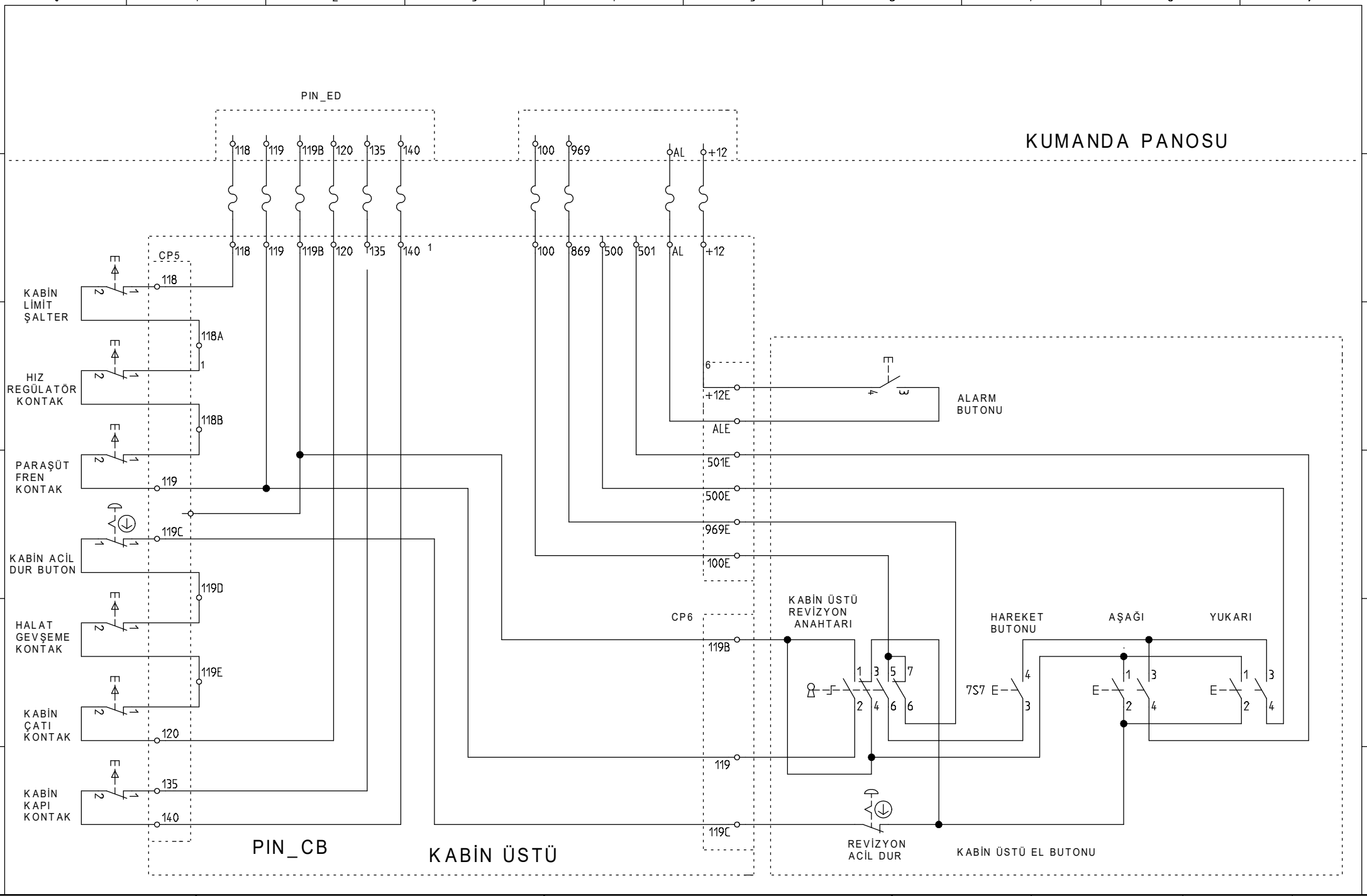

MEKCEN ELEKTRONİK		KABİN ÜSTÜ EMNİYET DEVRESİ REVİZYON VE ALARM BUTON BAĞLANTILATI	Proj. no.: mc__054-81-20	Drawing no.:	Rev.: 22.4.2018	Created by: M.KIVRAK
			Date: 22.4.2018	Function: =	Location: +	Page: 7