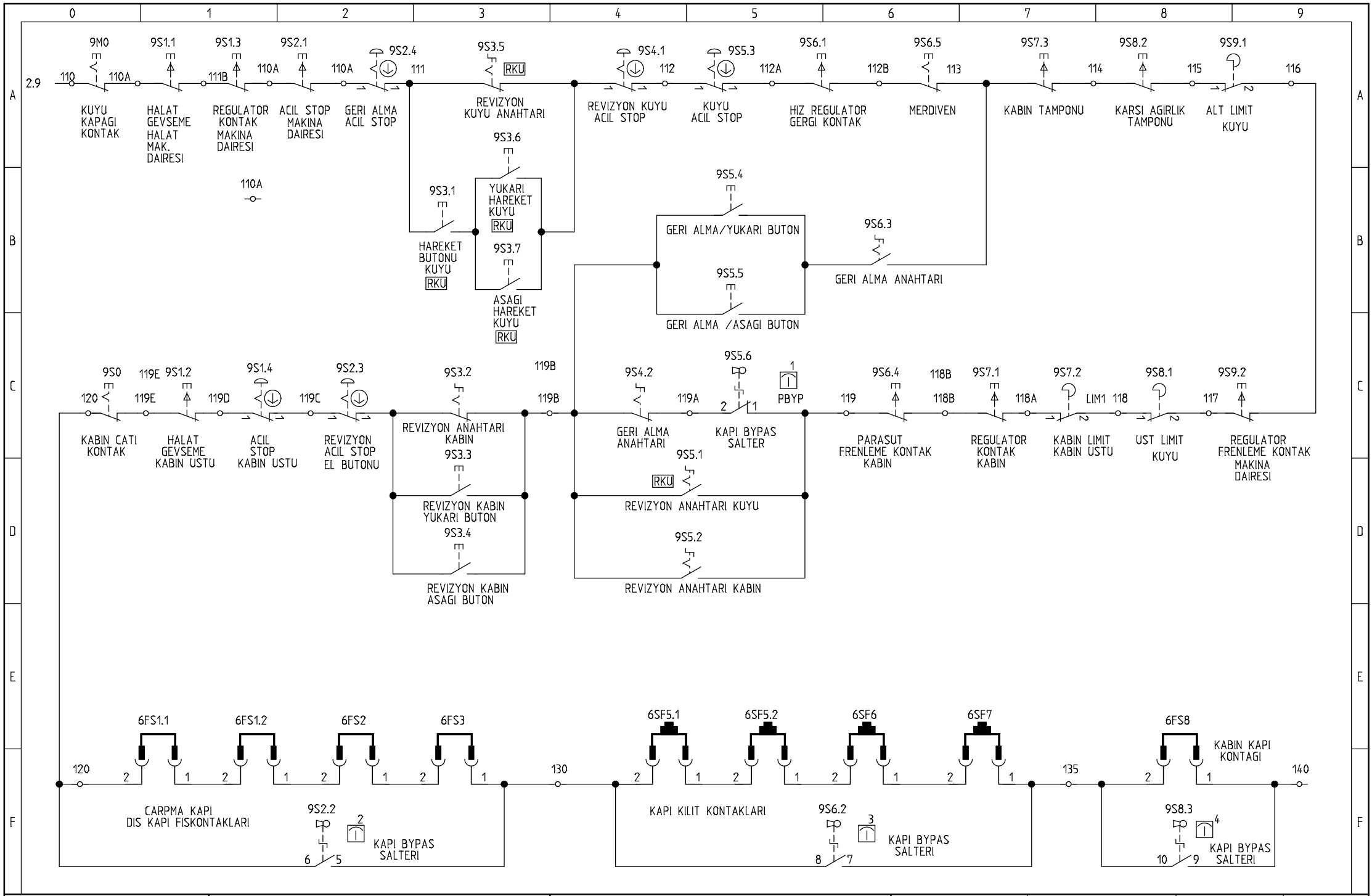

		TUM EMNIYET DEVRELERI	Proj. no.: mc__054-81-20	Drawing no.:	Rev.: 29.4.2018	Created by:
			Date: 29.4.2018	Function: =	Location: +	Page: 9