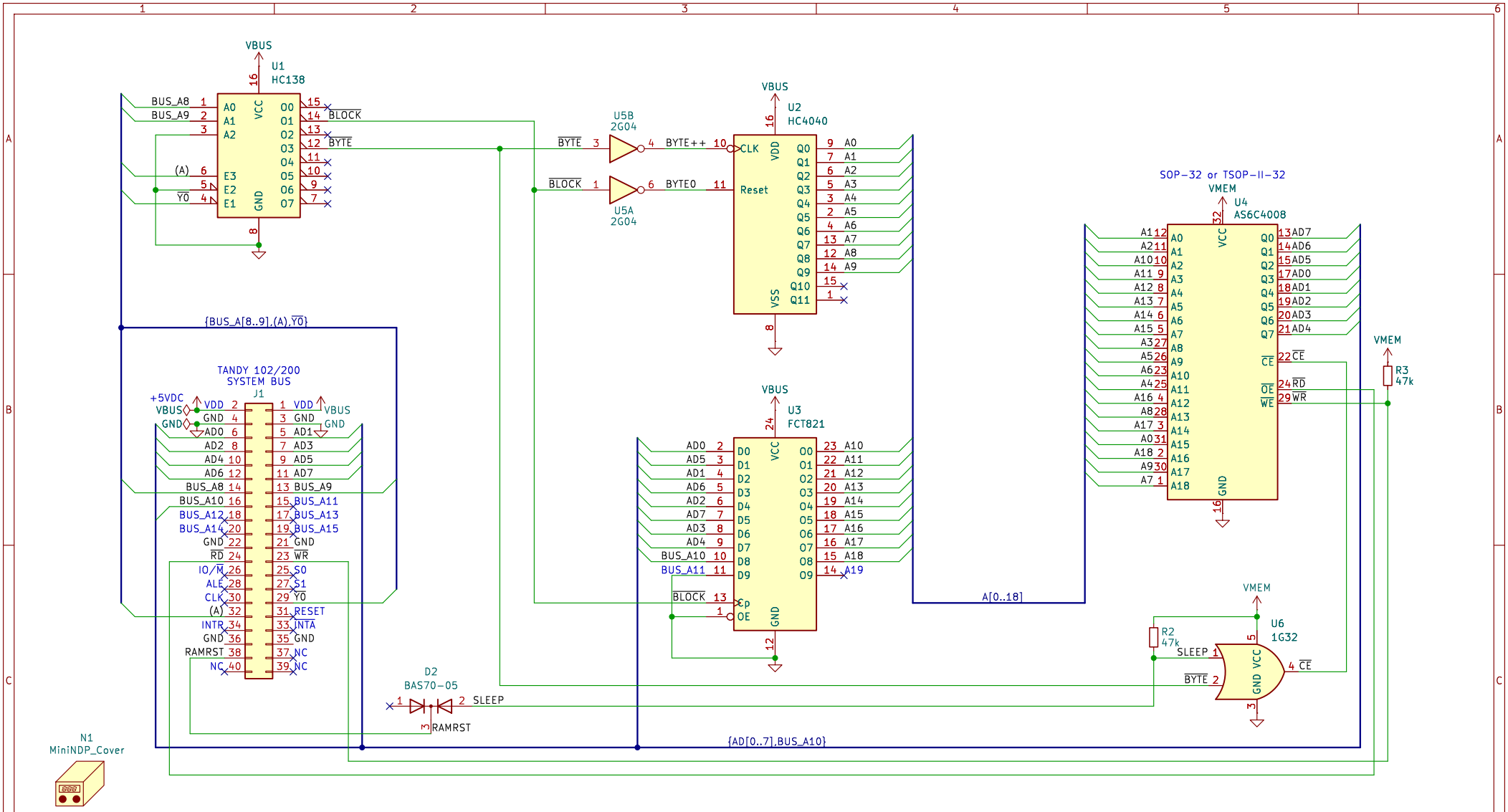

TANDY 100/102/200 BUS -> Effect

(A)	YO	A8	A9	A10	->	BLOCK	BYTE	Function
L	X	X	X	X		X	X	
X	H	X	X	X		X	X	
X	X	L	X	X		X	X	
H	L	H	L	L	->	L	H	Select BLOCK # from BANK 0
H	L	H	L	H	->	L	H	Select BLOCK # from BANK 1
H	L	H	H	X	->	H	L	Read or Write BYTE

BLOCK
L: sets A0-A9 to 0, updates A10-A18 from AD0-AD7 & BUS_A10
H: latches A10-A18

BYTE
L: enables SRAM for read or write
H: disables SRAM, increments A0-A9 by 1

Work-alike of NODE Systems DATAPAC / RAMPAC
Use with RAM100.CO or RAM200.CO
github.com/bkw777/NODE_DATAPAC
Brian K. White - b.kenyon.w@gmail.com

Sheet: /
File: MiniNDP_512_D.kicad_sch

Title: MiniNDP 512

Size: A4	Date: 2024-11-19	Rev: D02
KiCad E.D.A. 8.0.6		Id: 1/1