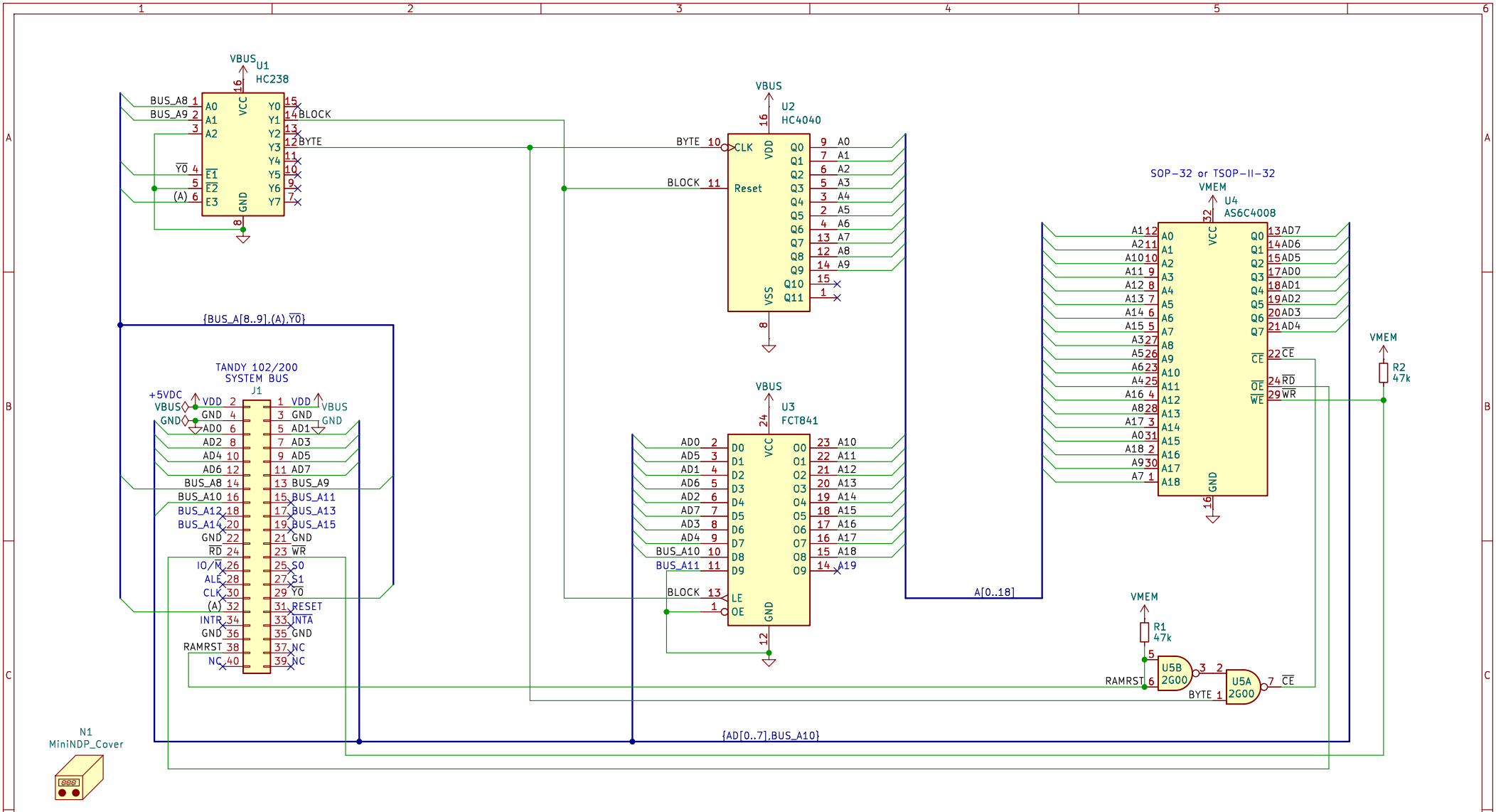

	BUS	BUS	BUS				
(A)	Y0	_A8	_A9	_A10	-> BLOCK	BYTE	Function
L	X	X	X	X	X	X	
X	H	X	X	X	X	X	
X	X	L	X	X	X	X	
H	L	H	L	L	-> H	L	Select BLOCK # from BANK 0
H	L	H	L	H	-> H	L	Select BLOCK # from BANK 1
H	L	H	H	X	-> L	H	Read or Write BYTE

BLOCK
H: sets A0-A9 to 0, updates A10-A18 from AD0-AD7 & BUS_A10
L: latches A10-A18

BYTE
H: enables SRAM for read or write
L: disables SRAM, increments A0-A9 by 1

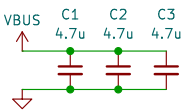

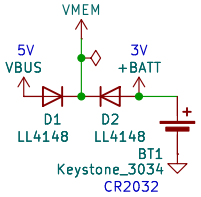

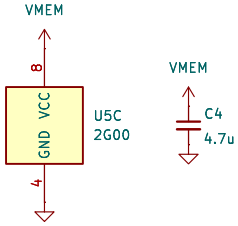

Work-alike of NODE Systems DATAPAC / RAMPAC
Use with RAM100.CO or RAM200.CO
github.com/bkw777/NODE_DATAPAC
Brian K. White - b.kenyon.w@gmail.com

NOT TESTED
512K with fewer parts

Sheet: /
File: MiniNDP_512_F.kicad_sch

Title: MiniNDP 512

Size: A4	Date: 2024-11-22	**Rev: F01**
KiCad E.D.A. 8.0.6		Id: 1/1