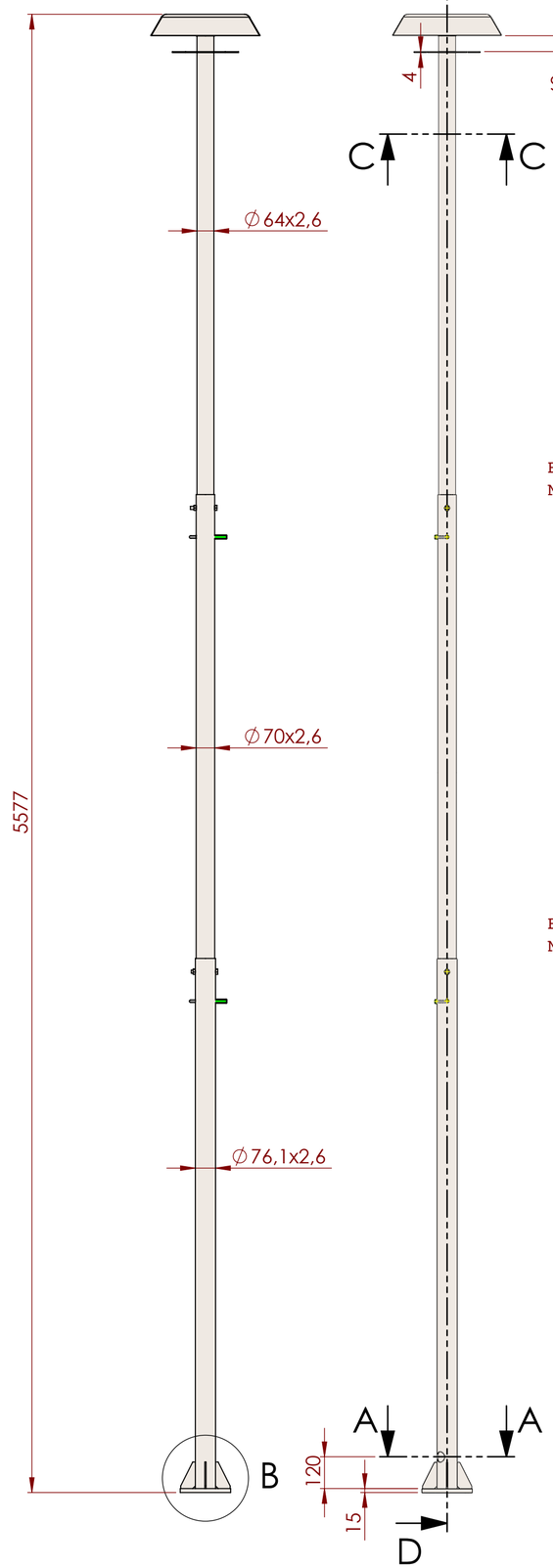

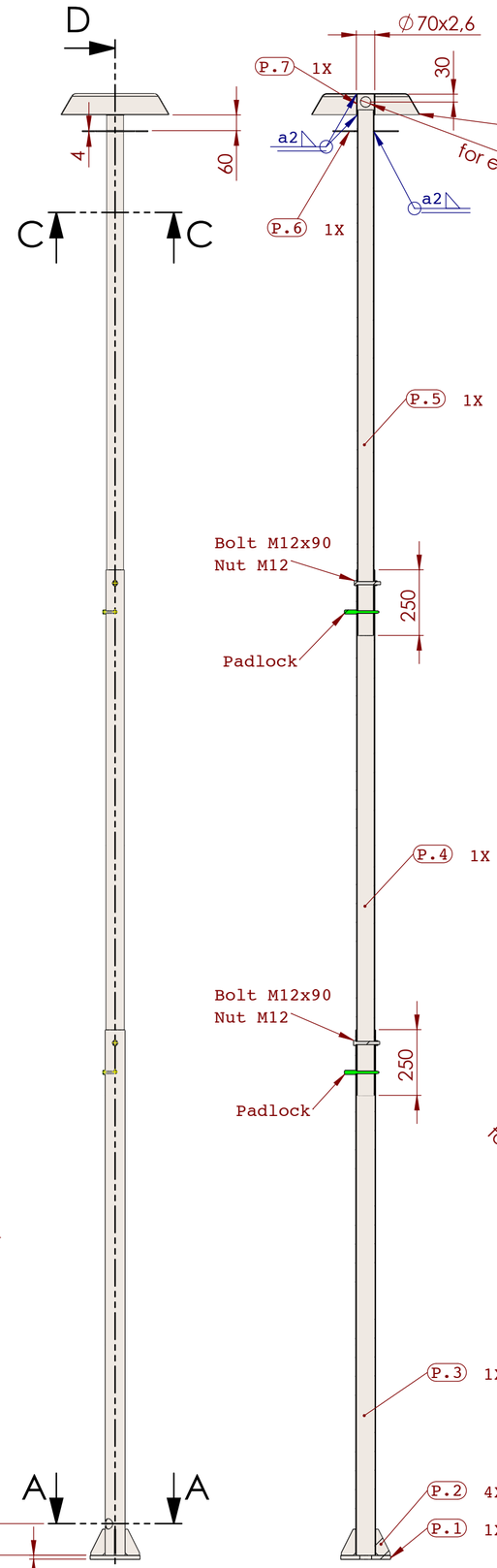

SECTION D-D

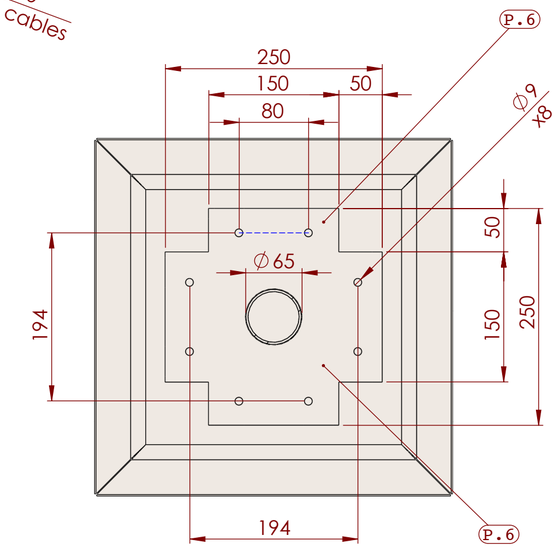

SECTION C-C

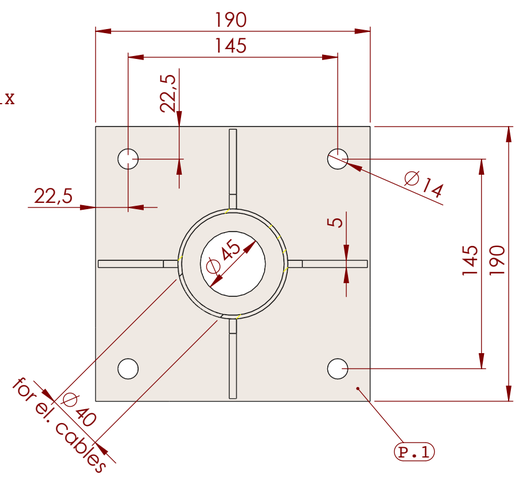

SECTION A-A

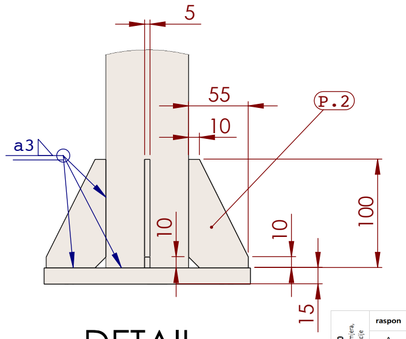

DETAIL B

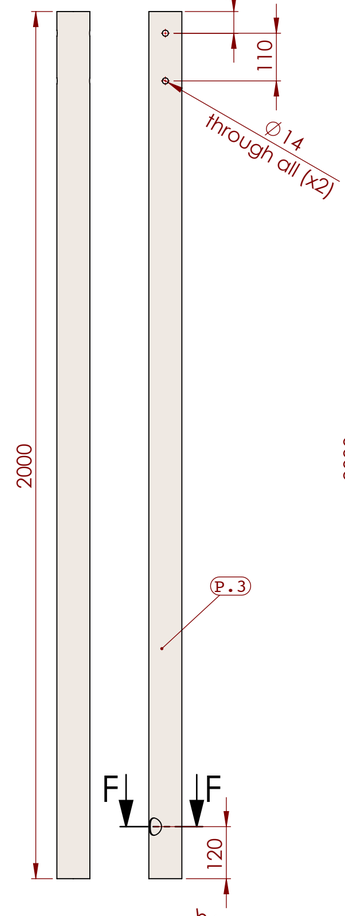

SECTION F-F

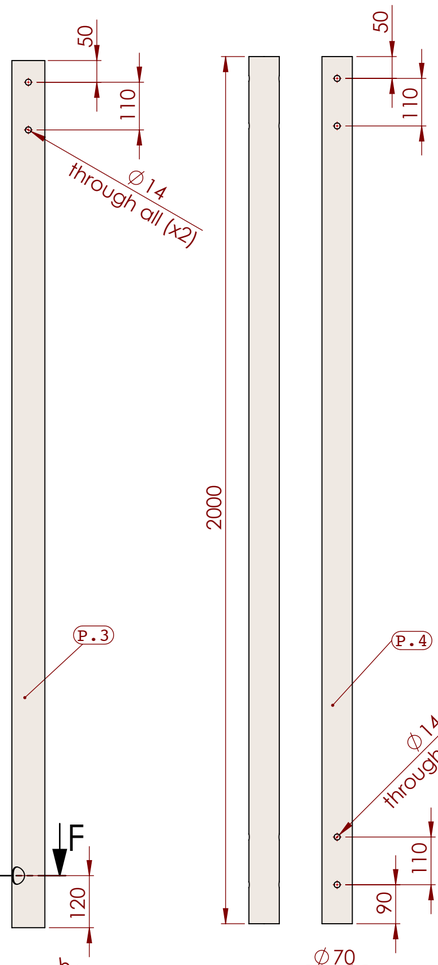

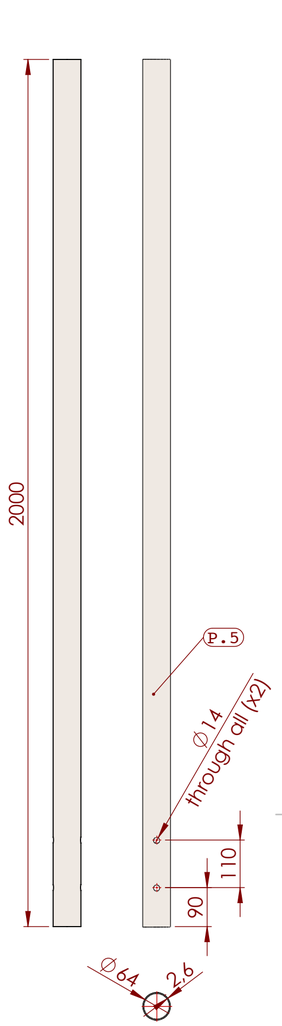

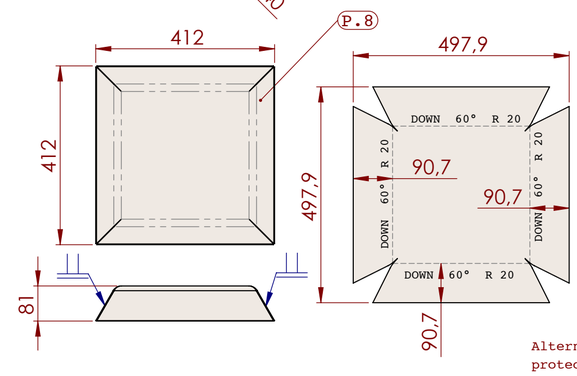

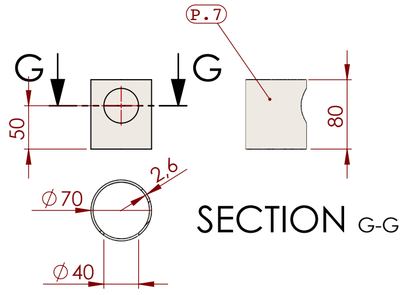

SECTION G-G

Alternatively structural steel can be used but surface protection is required like hot dip galvanising or painting

ISO 2768		raspon	f	m	c	v
tolerancije bez navođenja, maksimalni dozvoljeni poprimu		0,5	±0,05	±0,1	±0,2	-
		3	±0,05	±0,1	±0,3	±0,5
		6	±0,1	±0,2	±0,5	±1,0
		30	±0,15	±0,3	±0,8	±1,5
		120	±0,2	±0,5	±1,2	±2,5
		400	±0,3	±0,8	±2,0	±4,0
		1000	±0,5	±1,2	±3,0	±6,0
		2000	-	±2,0	±4,0	±8,0

ISO 13920		raspon	2	30	120	400	1000	2000	4000	8000	12000	16000	20000
tolerancije izvođenja mjera, zavarene konstrukcije			30	120	400	1000	2000	4000	8000	12000	16000	20000	...
		A	±1	±1,0	±1,0	±2,0	±3,0	±4,0	±5,0	±6,0	±7,0	±8,0	±9,0
		B		±2,0	±2,0	±3,0	±4,0	±6,0	±8,0	±10,0	±12,0	±14,0	±16,0
		C		±3,0	±4,0	±6,0	±8,0	±11,0	±14,0	±18,0	±21,0	±24,0	±27,0
		D		±4,0	±7,0	±9,0	±12,0	±16,0	±21,0	±27,0	±32,0	±36,0	±40,0

Obrada: ISO 1302 (c, e, g)

= bez obrade

#	c	e	g
Ra	12,5	3,2	0,8
Rz	63	16	6,3

Površinska zaštita: "n" - povrsine koje se ne farbaju

ISO 5817 - B nivo kvaliteta zavara

ISO 9692 priprema zljebova

	Ime i prezime:	Datum:
Izradio:	AJ	10.1.2024
Kontrolisao	AJ	10.1.2024
Odobrio:	AJ	10.1.2024

Standardi:
ISO 286-1
ISO 2553
ISO 2768 mK
ISO 13920 AE
ISO 9013-2

Tip projekcije:

Revizija: 00

Naziv dijela: **Camera pillar**

Masa: (kg) **37.20**

Materijal: **1.4301 (X5CrNi18-10)**

Projekat:

Razmjera: 1:x

Zabranjeno je bez dozvole Mašinskog fakulteta u Zenici distribuirati i kopirati kompletan ili dijelove crteza.