REV.	ECN NO.	DATE	APP'D.
A	REL	7/26/78	JW

910144-000 A

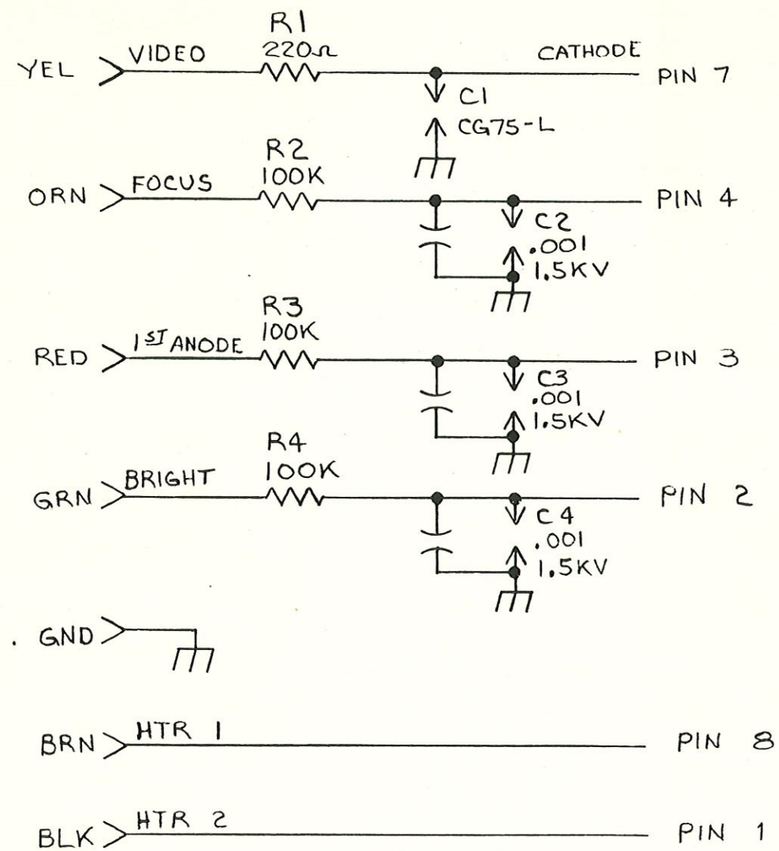

NEXT ASS'Y	USED ON	UNLESS OTHERWISE SPECIFIED DIMENSIONS ARE IN INCHES	APPROVED		CPT CORPORATION — CPT CORPORATION, 1001 2nd ST. SO., HOPKINS, MINN. 55343
MATERIAL		TOLERANCES: DECIMALS XX± ~, XXX± ~, XXXX± ~; FRACTIONS ± ~; ANGLES ± ~	ENGINEER		TITLE CRT SOCKET BOARD-
FINISH		THIS PRINT IS THE PROPERTY OF CPT CORPORATION, AND IS LOANED TO THE RECIPIENT SUBJECT TO RETURN ON DEMAND. ITS CONTENTS ARE CONFIDENTIAL AND MUST NOT BE COPIED OR SUBMITTED TO OUTSIDE PARTIES FOR USE OR EXAMINATION.	CHECKED		
			DRAWN Bahner	7-20-78	B — DRAWING NO. 910144-000 — REV. A
					SCALE ~ — SHEET OF

REV.	ECN NO.	DATE	APP'D.
A	REL	8/15/77	

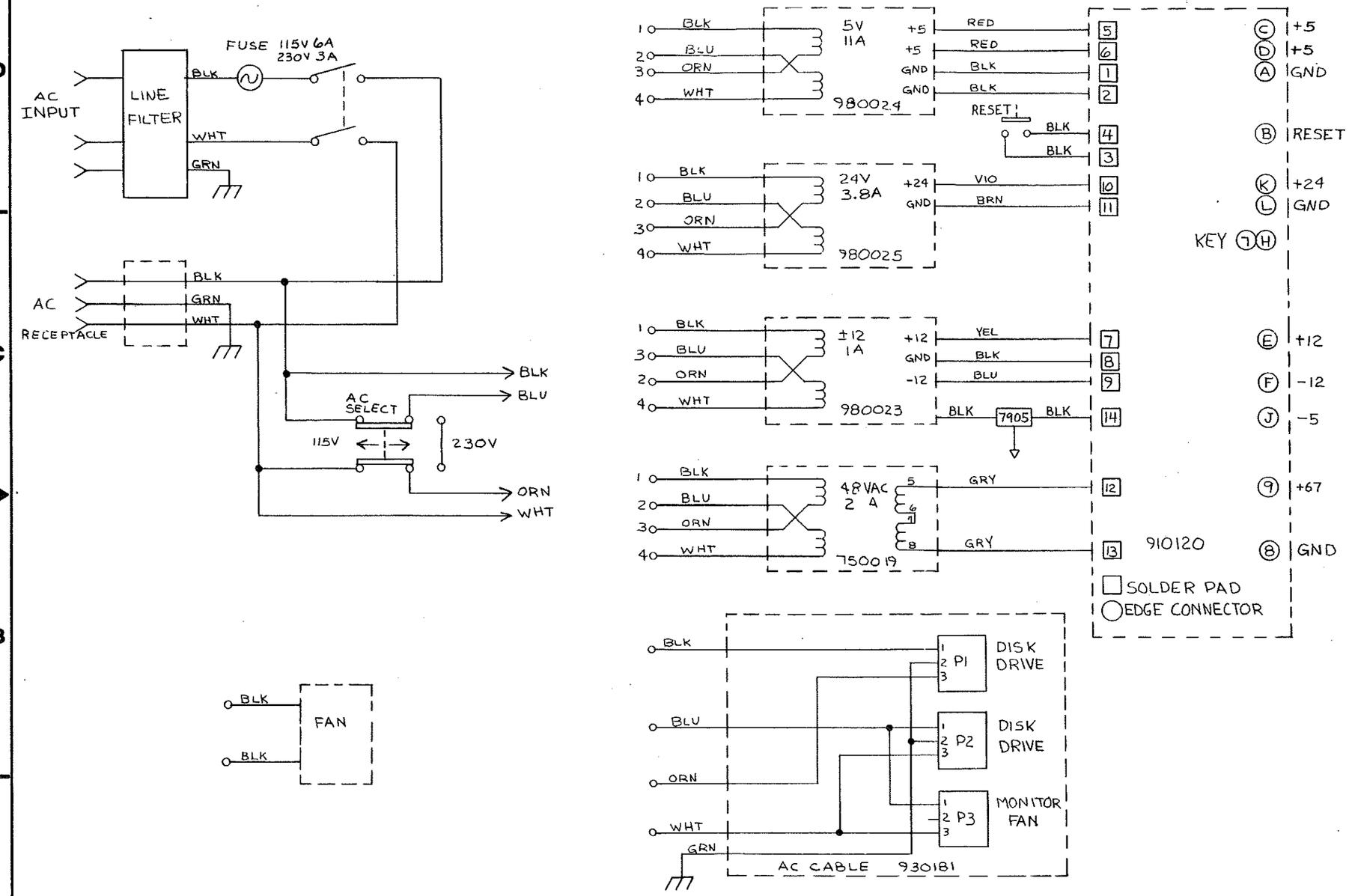

NEXT ASS'Y	USED ON	MODEL 080
MATERIAL		
FINISH		

UNLESS OTHERWISE SPECIFIED DIMENSIONS ARE IN INCHES
TOLERANCES
DECIMALS XX± XXX± XXXX±
FRACTIONS ±
ANGLES ±

THIS PRINT IS THE PROPERTY OF CPT CORPORATION, AND IS LOANED TO THE RECIPIENT SUBJECT TO RETURN ON DEMAND. ITS CONTENTS ARE CONFIDENTIAL AND MUST NOT BE COPIED OR SUBMITTED TO OUTSIDE PARTIES FOR USE OR EXAMINATION.

APPROVED		12/19/77
ENGINEER	F. Velarde	12-13-7
CHECKED		
DRAWN	C. HOWE	8/15/77

SHEET 1 IS "D" SIZE

CPT CORPORATION
CPT CORPORATION
1001 2nd ST. SO.
HOPKINS, MINN. 55343

TITLE MAIN P.S. ASS'Y 8000

C | DRAWING NO. 930180-00X | REV. D

SCALE | SHEET 2 OF 2

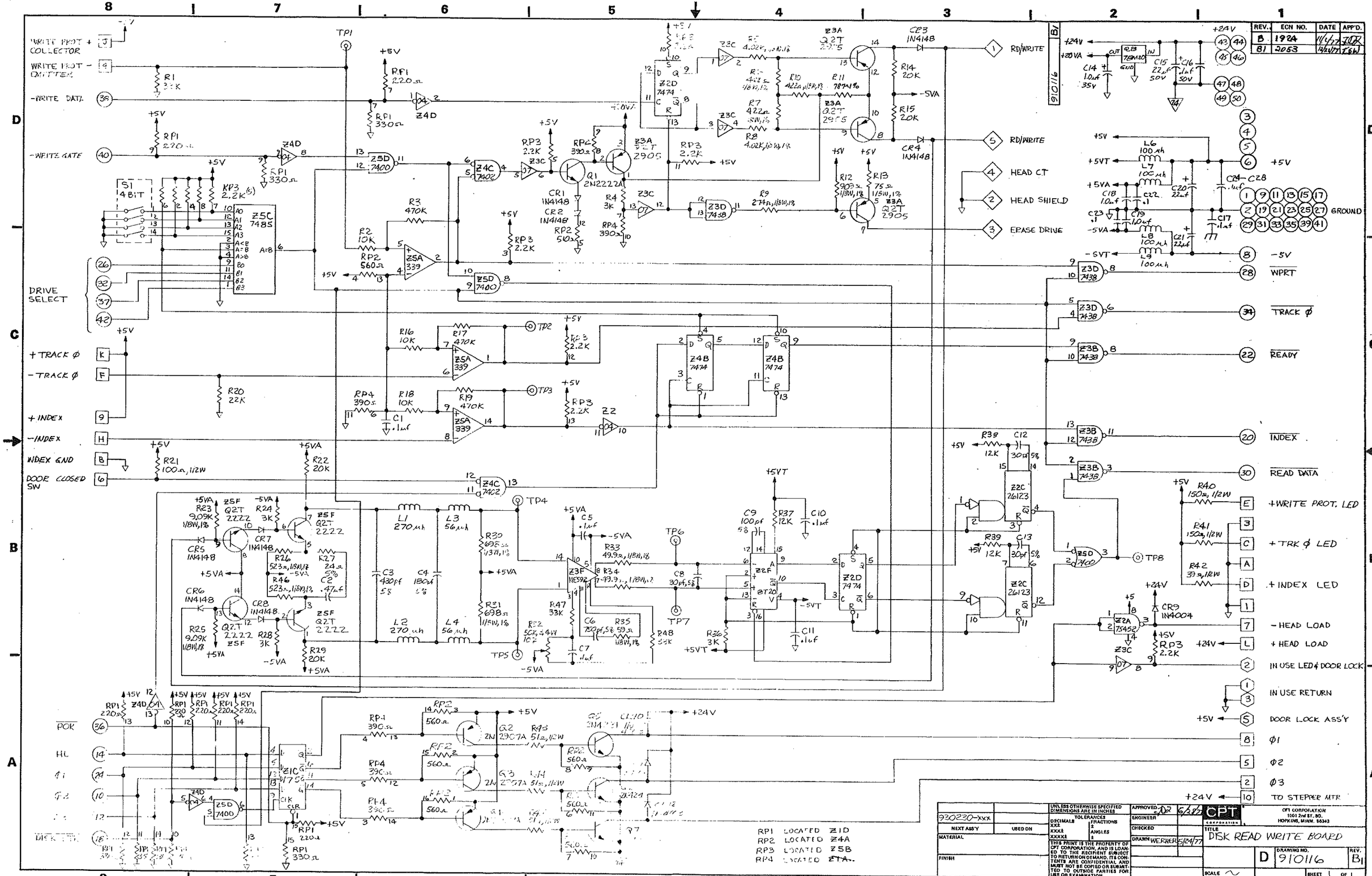

REV.	ECN NO.	DATE	APP'D.
B	1924	11/4/77	JDR
B1	2053	12/21/77	JGH

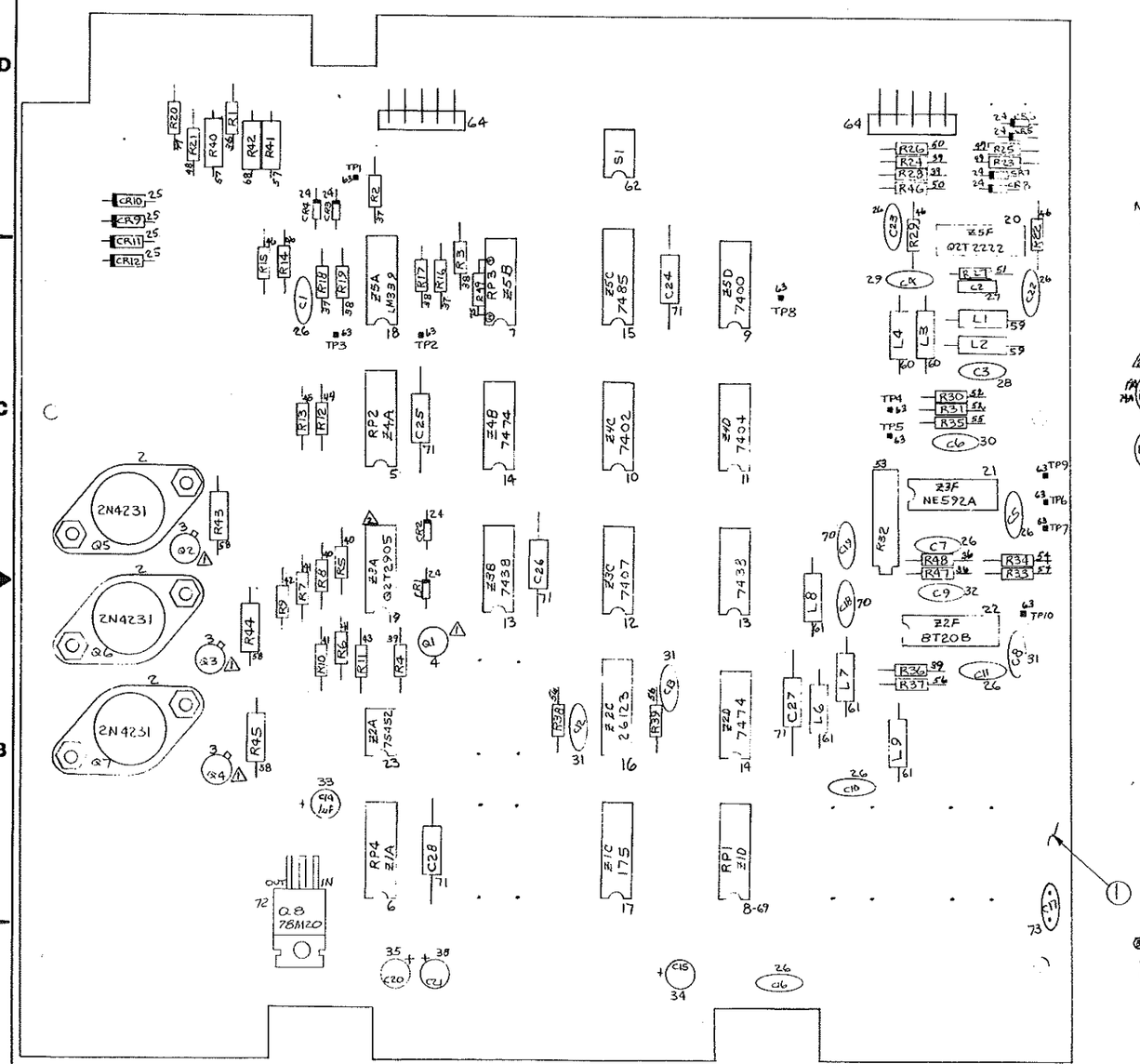
2N4231
Q5
Q6
Q7
Q8
78M20
Q1
Q2T2222
Q2T2905
Z5A
LM339
Z5B
Z5C
7485
Z5D
7400
Z4A
Z4B
7474
Z4C
7402
Z4D
7404
Z3A
Q2T2905
Z3B
7438
Z3C
7407
7438
Z3F
NE592A
Z2F
8T20B
Z2A
75452
Z2B
26123
Z2D
7474
Z1C
175
Z1D
RP1
RP2
RP3
RP4
TP1
TP2
TP3
TP5
TP6
TP7
TP8
TP9
TP10
S1
L1
L2
L3
L4
L7
L8
L9
C1
C2
C3
C4
C6
C7
C9
C10
C11
C16
C17
C19
C20
C21
C24
C25
C26
C27
C28
CR9
CR10
CR11
CR12
R20
R21
R40
R42
R41
R43
R44
R45
R2
R3
R12
R13
R14
R15
R16
R17
R18
R19
R5
R6
R7
R8
R10
R11
R4
R26
R27
R28
R29
R30
R31
R35
R36
R37
R38
R39
R48
R47
R34
R33
R32
R22
R23
R25
R46
R24
R1
R9
R25
R22
R23
R26
R27
R28
R29

REV.	ECN NO.	DATE	APP'D.
D	2102	1-24-78	TSW
D1	2148	2-28-78	TSW
D2	2190	4-4-78	TSW
D3	2220	4-25-78	TSW
D4	2322	6-9-78	TSW

910117-000 D4

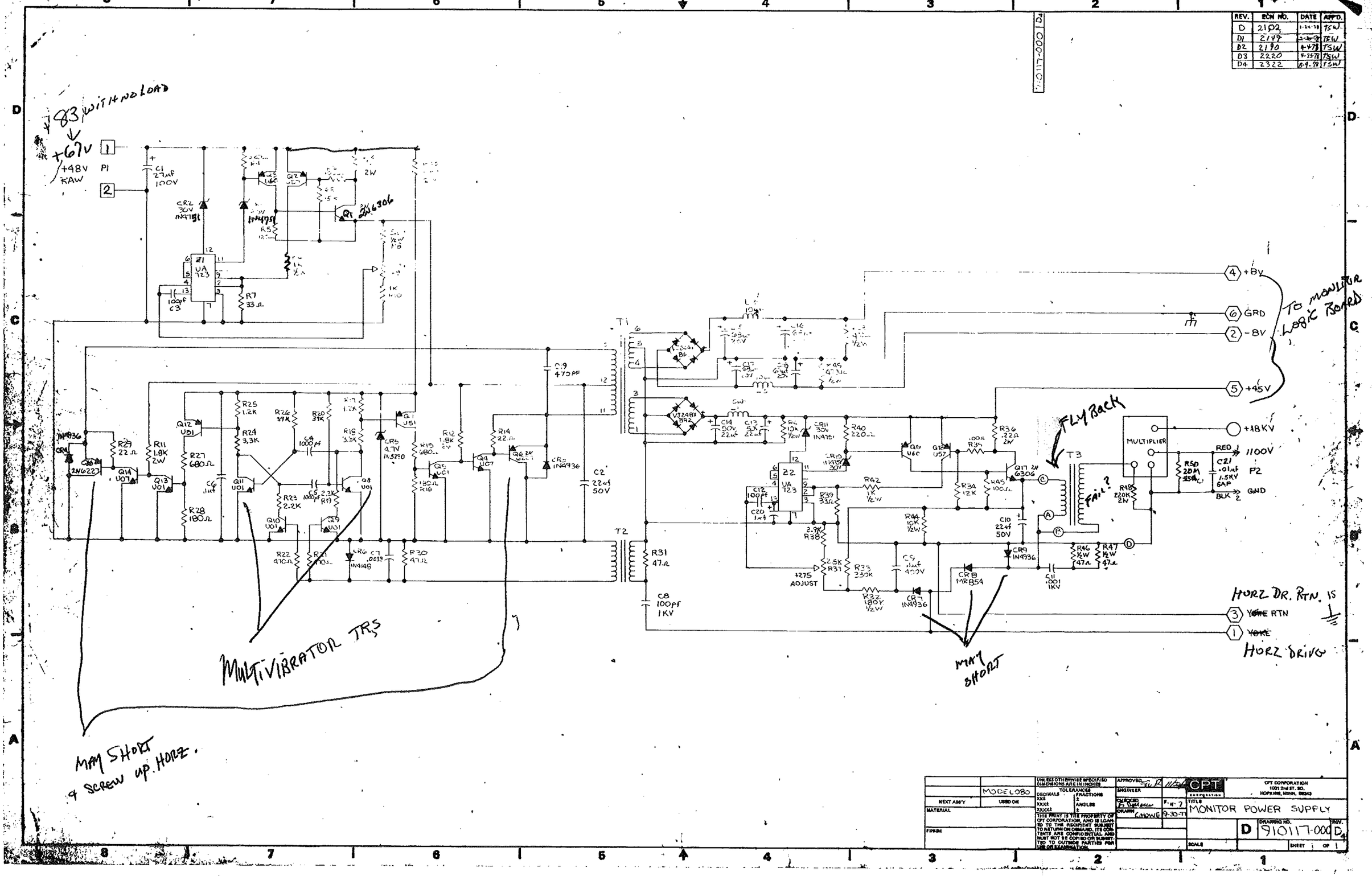

NEXT ASSY	MODEL 080 USED ON	UNLESS OTHERWISE SPECIFIED DIMENSIONS ARE IN INCHES TOLERANCES DECIMALS .XX .XXX .XXXX; FRACTIONS ±; ANGLES ±	APPROVED / ENGINEER / CHECKED / DRAWN C. HOWE 7-30-77
MATERIAL		THIS PRINT IS THE PROPERTY OF CPT CORPORATION, AND IS LOANED TO THE RECIPIENT SUBJECT TO RETURN ON DEMAND. ITS CONTENTS ARE CONFIDENTIAL AND MUST NOT BE COPIED OR SUBMITTED TO OUTSIDE PARTIES FOR USE OR EXAMINATION.	
FINISH			

CPT CORPORATION
1001 2nd ST. SO.
HOPKINS, MINN. 55343

TITLE: MONITOR POWER SUPPLY

D — DRAWING NO. 910117-000 — REV. D4

SCALE — SHEET 1 OF 1

REV.	ECN NO.	DATE	APP'D.
B	1887	10/3/77	
B1	2069	1/5/78	TSW
B2	2282	7/13/78	

910120 B2

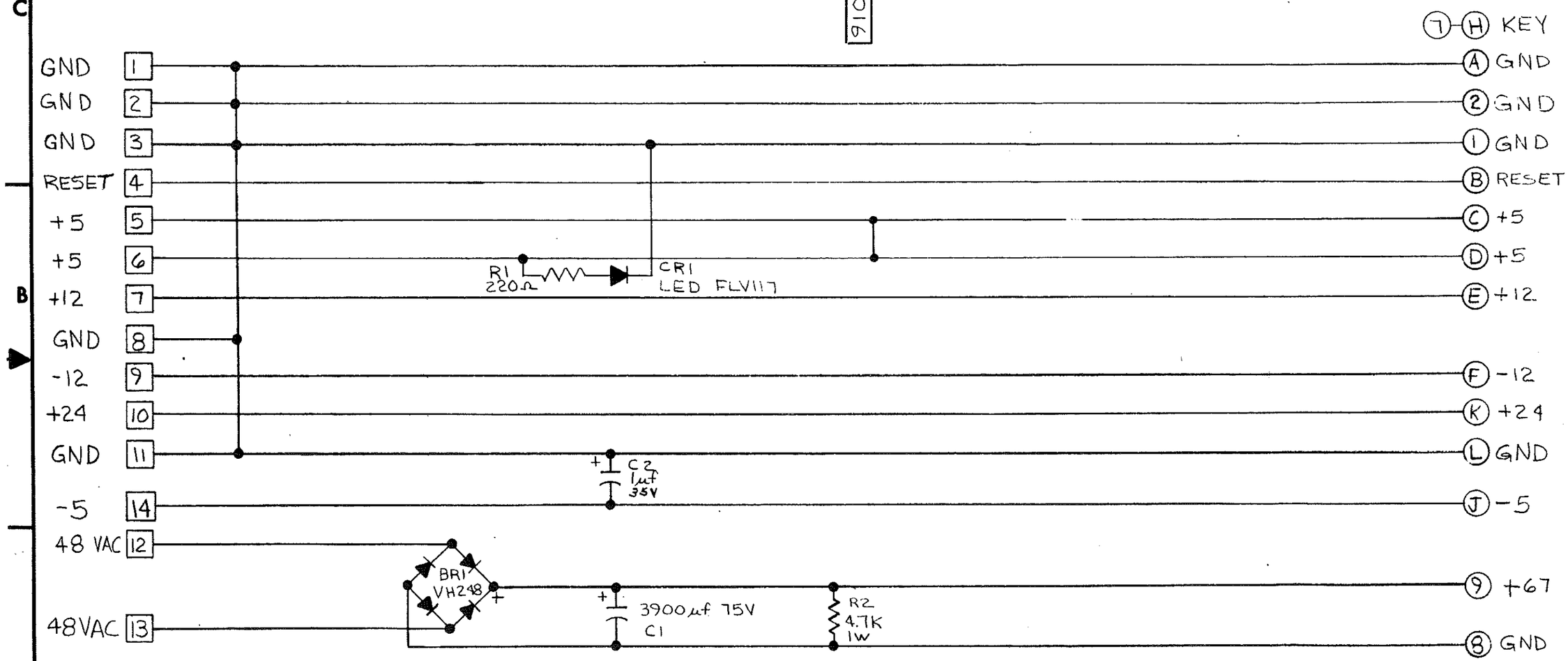

○ - EDGE CONN.
□ - SOLDER PADS

930180	MODEL 080
NEXT ASS'Y	USED ON
MATERIAL	
FINISH	

UNLESS OTHERWISE SPECIFIED DIMENSIONS ARE IN INCHES

TOLERANCES
DECIMALS XX± XXX± XXXX±
FRACTIONS ±
ANGLES ±

THIS PRINT IS THE PROPERTY OF CPT CORPORATION, AND IS LOANED TO THE RECIPIENT SUBJECT TO RETURN ON DEMAND. ITS CONTENTS ARE CONFIDENTIAL AND MUST NOT BE COPIED OR SUBMITTED TO OUTSIDE PARTIES FOR USE OR EXAMINATION.

APPROVED	.102	8/9/77
ENGINEER		
CHECKED	E. DeMarco	11-8-7
DRAWN	C. HOWE	7/20/77

CPT CORPORATION

CPT CORPORATION
1001 2nd ST. SO.
HOPKINS, MINN. 55343

TITLE P.S. CONNECTION BOARD

B | DRAWING NO. 910120-000 | REV. B2

SCALE ~ | SHEET 1 OF 1

REV.	ECN NO.	DATE	APP'D.
B	1887	12-13-77	[illegible]
B1	2069	1/5/78	TSW
	2174	3/15/78	TSW
B2	2282	7/13/78	TSW

910120-000 B2

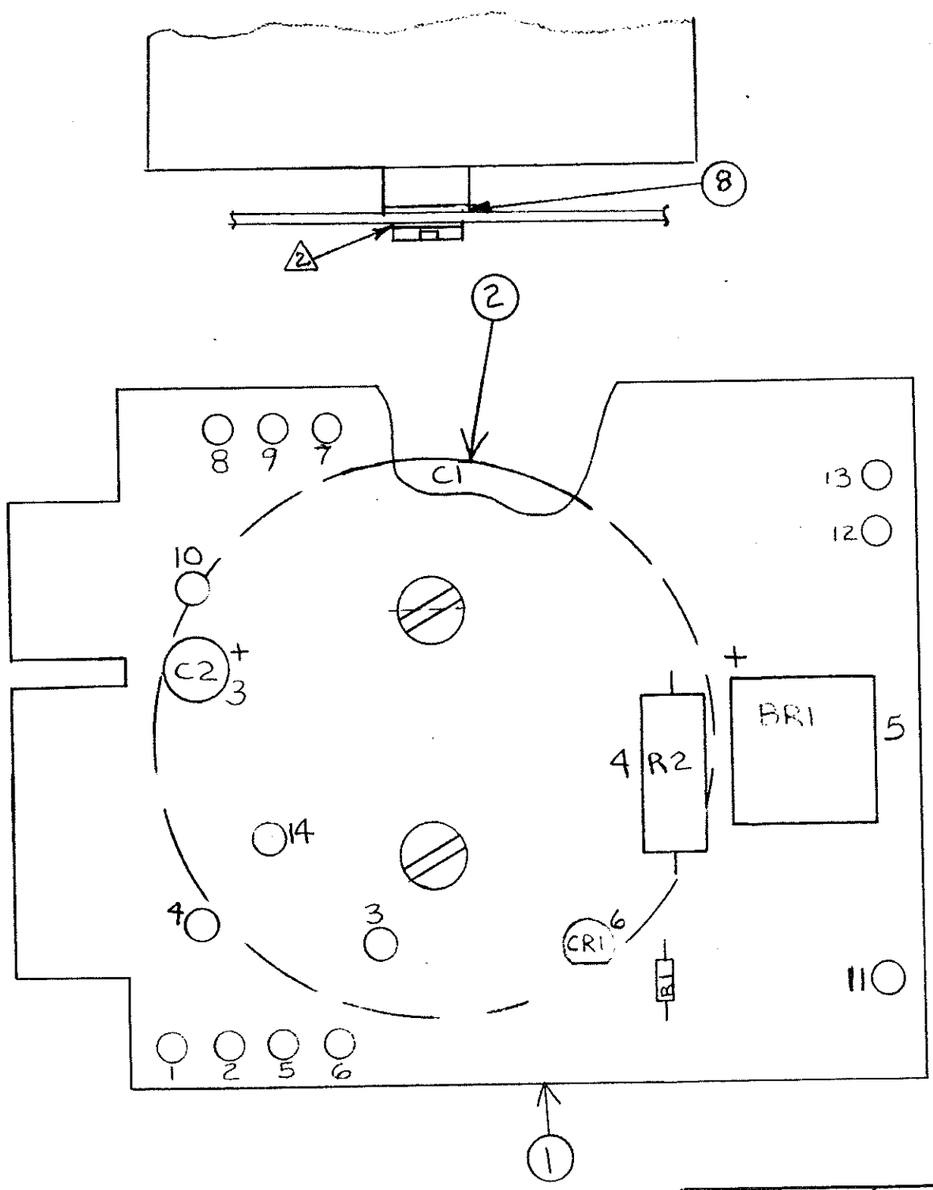

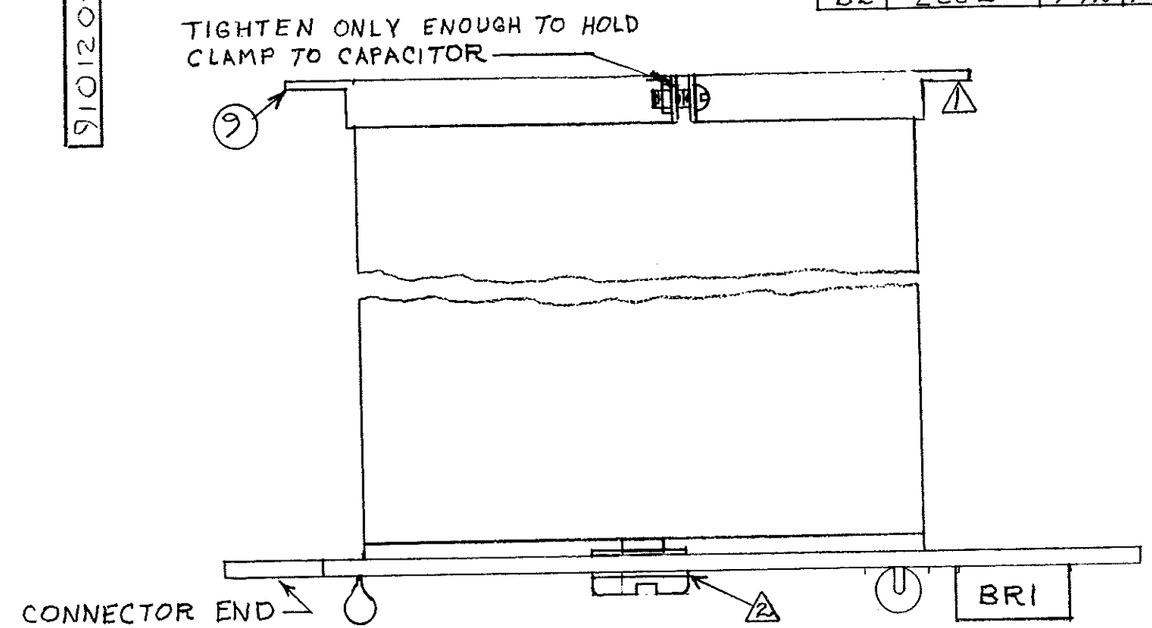

F/N	PART NO.	REQ QTY	EDIT QTY	DESCRIPTION	MFGR IDENT	TOT QTY
②⚠ 9	740097-002	1		CAPACITOR MTG. CLAMP		
① 8	320007-010	2		WASHER INT. TOOTH #10		
7	650001-221	1		RES-1/4W 220Ω	R1	
6	560004-000	1		LED-FLV117	CR1	
5	560008-002	1		BRIDGE-VH248	BR1	
4	650021-472	1		RES-1W 4.7K	R2	
3	620187-105	1		CAP-1uf 35V	C2	
2	642980-398	1		CAP-3900uf 75V	C1	
1	270120-000	1		CIRCUIT CARD		

⚠2 WASHER ON THIS SIDE ONLY WHEN NON-REMOVABLE FROM SCREW SUPPLIED.

②⚠ F/N9 TO BE ATTACHED AS SHOWN.

NOTES:

NEXT ASS'Y	USED ON
930180	MODEL 983

MATERIAL

FINISH

UNLESS OTHERWISE SPECIFIED DIMENSIONS ARE IN INCHES

TOLERANCES

DECIMALS: XX± XXX± XXXX±

FRACTIONS ±

ANGLES ±

THIS PRINT IS THE PROPERTY OF CPT CORPORATION, AND IS LOANED TO THE RECIPIENT SUBJECT TO RETURN ON DEMAND. ITS CONTENTS ARE CONFIDENTIAL AND MUST NOT BE COPIED OR SUBMITTED TO OUTSIDE PARTIES FOR USE OR EXAMINATION.

APPROVED	[illegible]	7/20/77
ENGINEER		
CHECKED		
DRAWN	C. HOWE	7/20/77

CPT CORPORATION
CPT CORPORATION
1001 2nd ST. SO.
HOPKINS, MINN. 55343

TITLE P.C. BOARD POWER SUPPLY CONNECTION

SCALE 2/1

B

DRAWING NO. 910120-000

REV. B2

SHEET 1 OF 1

NOTES

1. REMOVE PIN #45 FROM F/N8 (P2, P3) (BEFORE) INSTALLING ON BOARD NOTE PIN SEQUENCE.
2. REMOVE PIN #4 FROM F/N7 (P1) (BEFORE) INSTALLING ON BOARD. NOTE PIN SEQUENCE.
3. REMOVE PIN #9 FROM F/N7 (P6) (BEFORE) INSTALLING ON BOARD. NOTE PIN SEQUENCE.
4. ALL IC'S LS UNLESS OTHERWISE NOTED.
5. REMOVE PIN #6 FROM F/N7 (P5) (BEFORE) INSTALLING ON BOARD. NOTE PIN SEQUENCE.

910138-000 A

REV.	ECN NO.	DATE	APP'D.
A	REL	7-21-78	JSW

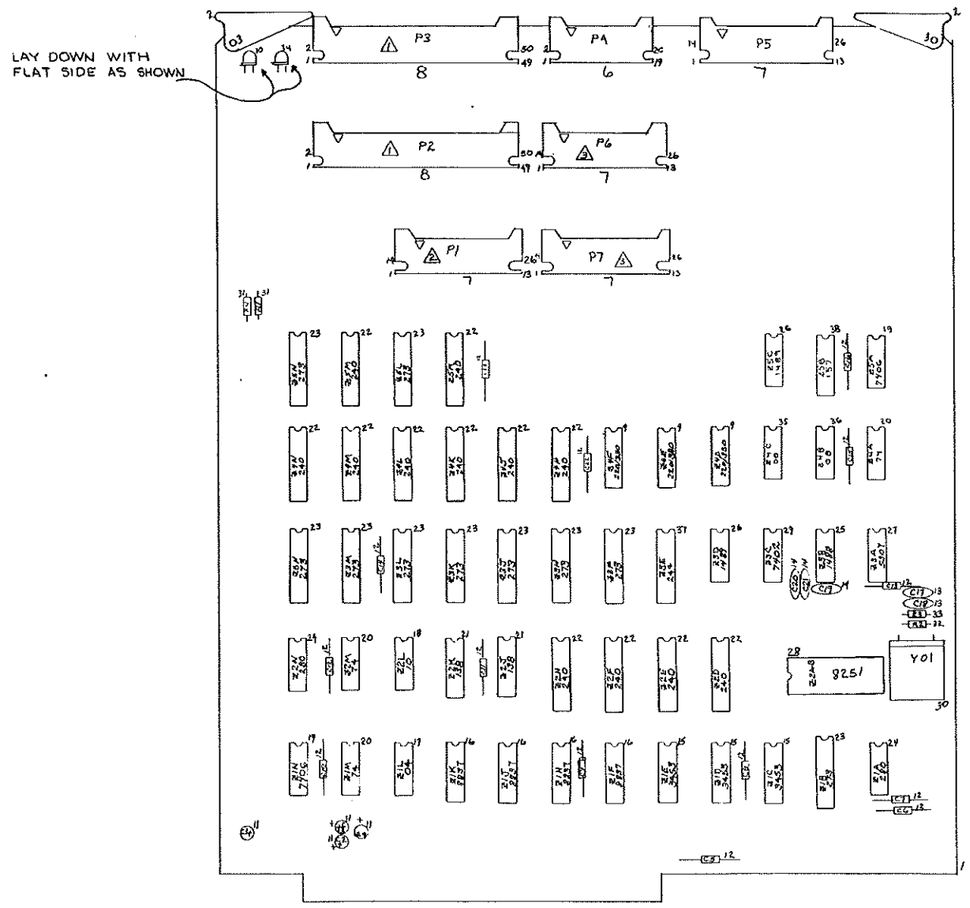

F/N	PART NUMBER	REQ QTY	EDIT QTY	DESCRIPTION	MFGR IDENT	TOT QTY
38	530374-157	1		IC 74LS157	Z5B	
37	530374-244	1		IC 74LS244	Z3E	
36	530374-008	1		IC 74LS08	Z4B	
35	530374-000	1		IC 74LS00	Z4C	
34	560004-002	1		LED FLV 310 (GREEN)	CR2	
33	650001-106	1		RESISTOR 10M ~ ¼W	R3	
32	650001-332	1		RESISTOR 3.3K ~ ¼W	R2	
31	650001-221	2		RESISTOR 220 ~ ¼W	R1, R4	
30	730017-000	1		CRYSTAL 921.6 KHz	Y01	
29	530074-002	1		IC 7402	Z3C	
28	538251-000	1		IC 8251	Z2A-B	
27	535307-000	1		IC 5307	Z3A	
26	531489-000	2		IC MC 1489	Z3D, Z5C	
25	531488-000	1		IC MC 1488	Z3B	
24	530374-280	2		IC 74LS280	Z1A, B2N	
23	530374-273	10		IC 74LS273	Z3H, 3J, 3L, 2-1B, 2F, 2H, 2J, 2H, 3L	
22	530374-240	12		IC 74LS240	Z3K, 3L, 4A, 4B, 4C, 4D, 2H, 2J, 2K, 2E, 2B, 2A, 4E	
21	530374-138	2		IC 74LS138	Z2J, 2K	
20	530374-074	3		IC 74LS74	Z1A, 2M, 4A	
19	530074-006	2		IC 7406	Z1N, Z5A	
18	530374-010	1		IC 74LS10	Z2L	
17	530374-004	1		IC 74LS04	Z1L	
16	538837-000	4		IC 8837 or 8737	Z1F, 1H, 1J, 1K	
15	533453-000	3		IC 3453	Z1C, 1D, 1E	
14	608450-331	3		CAPACITOR 390 PF 1KV	C19, 20, 21	
13	603450-390	2		CAPACITOR 33pF 1KV	C17, 18	
12	599885-104	14		CAPACITOR .1uF 50V	C5 THRU C16-C22, 23	
11	620192-226	4		CAPACITOR 22uF 16V	C1 THRU C4	
10	560004-001	1		LED FLV 410 (yellow)	CR1	
9	520030-002	3		TERM. PACK 220/330	Z4D, Z4E, Z4F	
8	780075-050	2		HEADER SOLDER TAIL	P2, P3	
7	780075-026	4		HEADER SOLDER TAIL	P1, P5, P7, P6	
6	780075-020	1		HEADER SOLDER TAIL	P4	
5	780078-000	1		PLUG ASSY 50 POS.		
4	740067-000	2		SCREW LOCK ASSY		
3	330015-304	2		ROLL PIN		
2	210006-000	2		CARD EJECTOR		
1	270138-000	1		BOARD BLANK		

NEXT ASS'Y	MODEL 080	UNLESS OTHERWISE SPECIFIED DIMENSIONS ARE IN INCHES	APPROVED JW 8/9/78
	USED ON	TOLERANCES: DECIMALS X.X ± / X.XX ± / X.XXX ± / X.XXXX ±; FRACTIONS ±; ANGLES ±	ENGINEER
MATERIAL			CHECKED
			DRAWN GEW
FINISH			

THIS PRINT IS THE PROPERTY OF CPT CORPORATION, AND IS LOANED TO THE RECIPIENT SUBJECT TO RETURN ON DEMAND. ITS CONTENTS ARE CONFIDENTIAL AND MUST NOT BE COPIED OR SUBMITTED TO OUTSIDE PARTIES FOR USE OR EXAMINATION.

CPT CORPORATION

CPT CORPORATION
1001 2nd ST. SO.
HOPKINS, MINN. 55343

TITLE: 8000 COMM I/O

D — DRAWING NO. 910138-000 — REV. A

SCALE 1/1 — SHEET 1 OF 1

REV.	ECN NO.	DATE	APP'D.
B	REL	7/26/78	JW
B1	2368	9/14/78	JSW

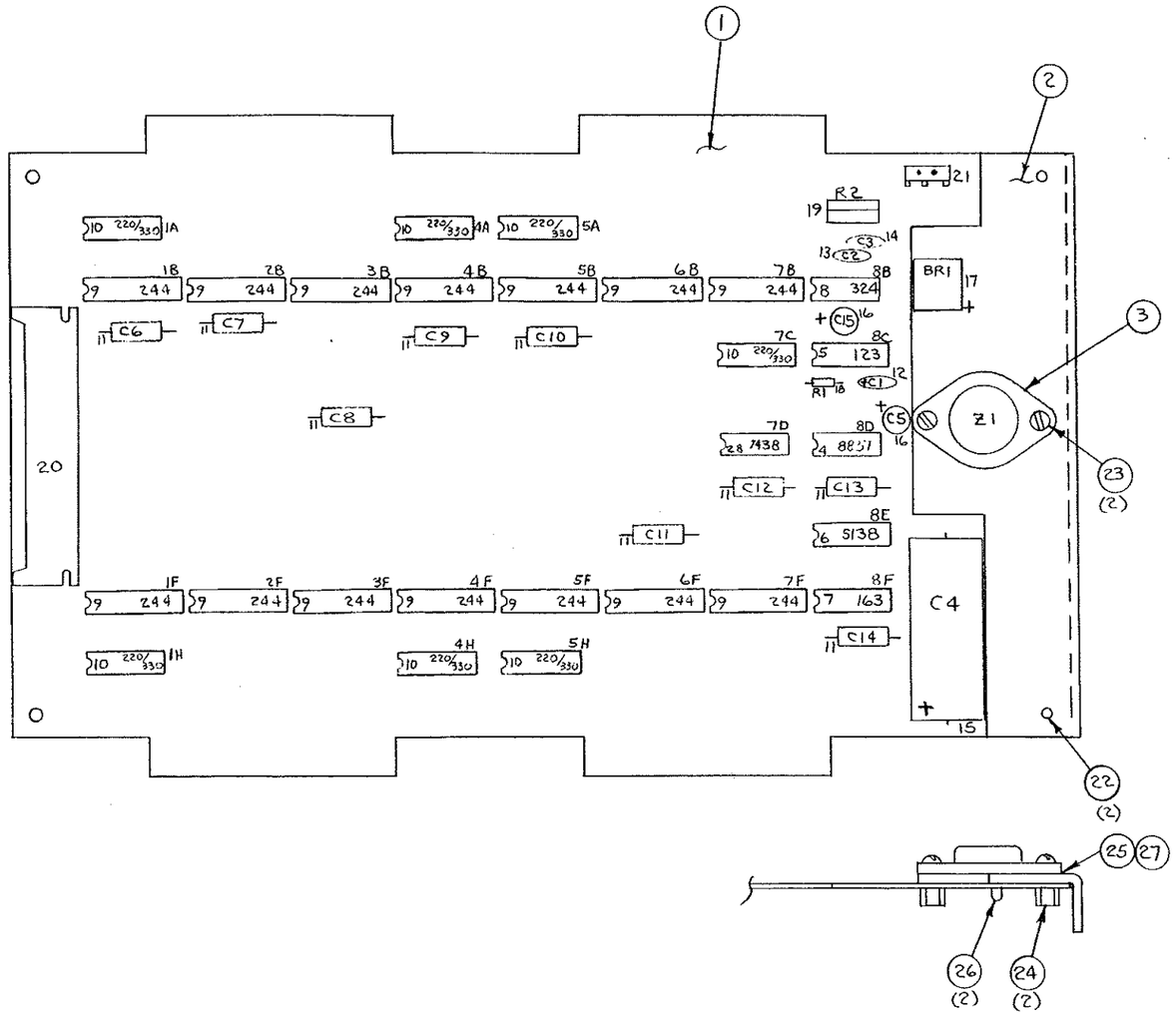

F/N	PART NO.	REQ QTY	EDIT QTY	DESCRIPTION	MFGR IDENT	TOT QTY
29						
28	530074-038	1		IC - 7438	7D	
27	T08030-000	A/R		THERMAL COMP.		
26	780064-000	2		SOCKET - COMP.		
25	740030-001	1		MICA INSULATOR - TO-3		
24	320031-603	2		STANDOFF - SWAGE #6-32 x 3/16 LG		
23	300609-200	2		SCREW - B.H. #6-32 x 9/16 LG		
22	300604-200	2		SCREW - B.H. #6-32 x 1/4 LG		
21	780080-002	1		CONN - 2 PIN MOLEX		
20	780075-050	1		CONN - 50 PIN		
19	720004-102	1		RES - POT 1K	R2	
18	650001-104	1		RES - 1/4 W 100K	R1	
17	560009-000	1		RECTIFIER BRIDGE - VJ048	BR1	
16	620387-105	2		CAP - 1 µf / 35V	C5, C15	
15	641992-307	1		CAP - 3,000 / 16V	C4	
14	609577-104	1		CAP - .1 µf	C3	
13	603450-100	1		CAP - 10 pf	C2	
12	620192-226	1		CAP - 22 µf	C1	
11	599885-104	9		CAP - .1 / 50V	C6 - C14	
10	520030-002	7		IC - TERMINATOR - 220/330	1A, 4A, 5A, 1H, 4H, 5H, 7C	
9	530374-244	14		IC - 74LS244	1B - 7B, 1F - 7F	
8	530374-324	1		IC - 74LS324	8B	
7	530374-163	1		IC - 74LS163	8F	
6	530374-138	1		IC - 74LS138	8E	
5	530374-123	1		IC - 74LS123	8C	
4	538837-000	1		IC - 8837	8D	
3	530005-000	1		REGULATOR - LM323K	Z1	
2	110248-000	1		HEAT SINK -		
1	270140-000	1		CIRCUIT CARD		

930321-000	MODEL 081
NEXT ASS'Y	USED ON
MATERIAL	
FINISH	

UNLESS OTHERWISE SPECIFIED DIMENSIONS ARE IN INCHES

TOLERANCES

DECIMALS XX± XXX± XXXX±

FRACTIONS ±

ANGLES ±

THIS PRINT IS THE PROPERTY OF CPT CORPORATION, AND IS LOANED TO THE RECIPIENT SUBJECT TO RETURN ON DEMAND. ITS CONTENTS ARE CONFIDENTIAL AND MUST NOT BE COPIED OR SUBMITTED TO OUTSIDE PARTIES FOR USE OR EXAMINATION.

APPROVED	
ENGINEER	
CHECKED	
DRAWN Bolivar	4-13-78

CPT CORPORATION

CPT CORPORATION
1001 2nd ST. SO.
HOPKINS, MINN. 55343

TITLE MULTI 8000/QUME INTERFACE

C | DRAWING NO. 910140-000 | REV. B1

SCALE 1/1 | SHEET 1 OF 1