CPT CORPORATION
1001 2nd ST. SO.
HOPKINS, MINN. 55343
DISPLAY BD. 8000
9100 94-XXX
D
E2
SHEET 1 OF 2
REV. ECN NO. DATE APP'D.
E 2204 9/18/78 TSW
E1 2339 8/21/79 TSW
E2 2373 9/18/79 TSW
9100 94-XXXE2
UNLESS OTHERWISE SPECIFIED DIMENSIONS ARE IN INCHES
TOLERANCES
DECIMALS .XX ±
.XXX ±
.XXXX ±
FRACTIONS ±
ANGLES ±
THIS PRINT IS THE PROPERTY OF CPT CORPORATION, AND IS LOANED TO THE RECIPIENT SUBJECT TO RETURN ON DEMAND. ITS CONTENTS ARE CONFIDENTIAL AND MUST NOT BE COPIED OR SUBMITTED TO OUTSIDE PARTIES FOR USE OR EXAMINATION.
NEXT ASS'Y
USED ON
MATERIAL
FINISH
APPROVED
ENGINEER
CHECKED
DRAWN
SCALE
VIDEO
VRET
SHLD
OE
CLK
NWLN SYNC
EOF
START
NWLN
1.2 MS START
V SYNC
H SYNC
ADD 80
REVID
LM1
LD SP
NESC
DATA BUS
WRTLM
MCLK
WRTNE
MCLK + BUSY
Ø FOR VERT RETRACE
CHARACTER ROWS
Ty Sockets
Displays 8x8 Char. Regs.
Displays 5x7 Char. Regs.
Displays 1 Line Regs.
Displays Sync Regs.
Displays Text Space
Displays Text Space
Displays Text Space

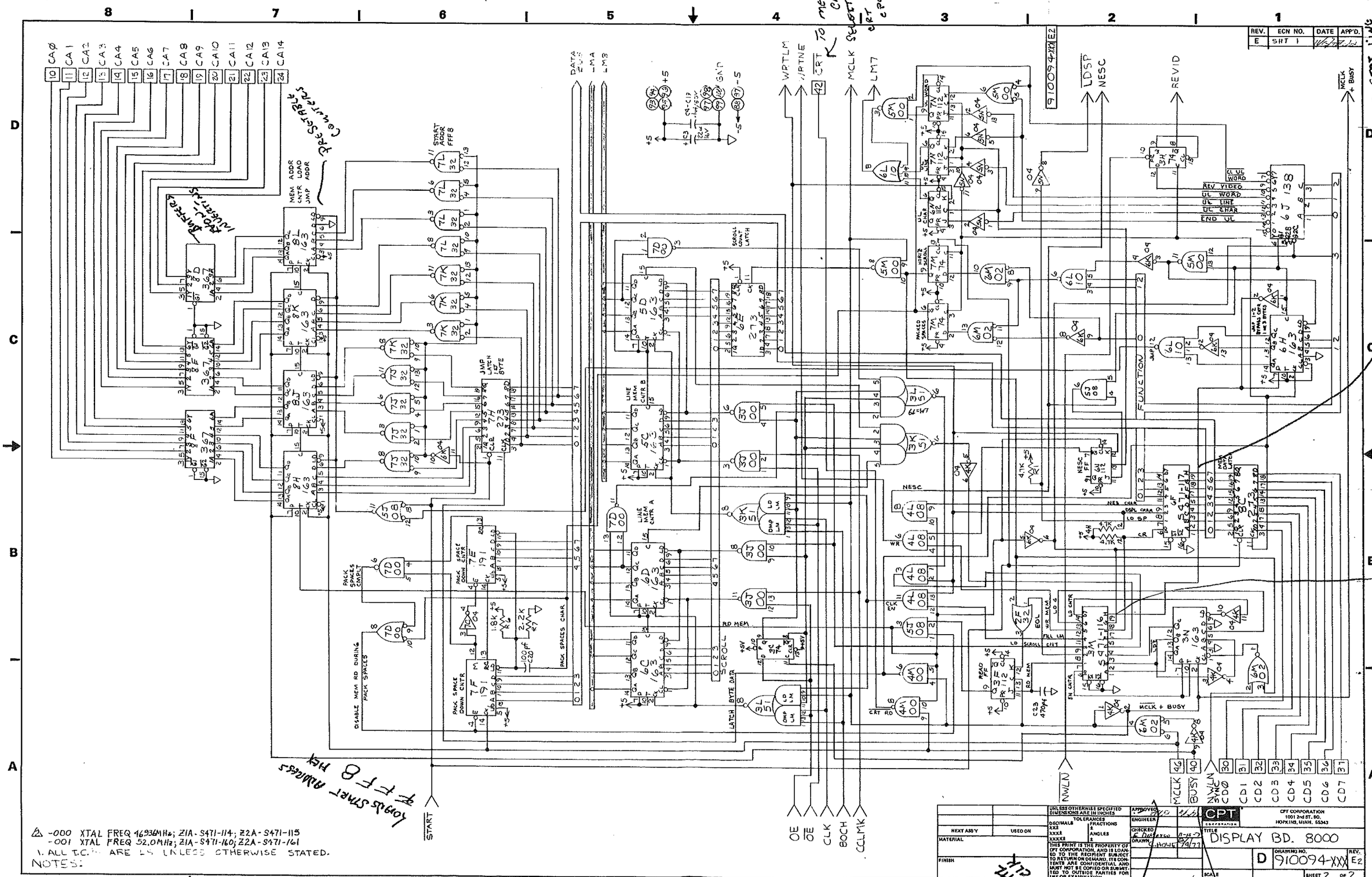

NOTES:
1. ALL I.C.'S ARE LS UNLESS OTHERWISE STATED.
△ -000 XTAL FREQ 16.934MHz; Z1A-S471-114; Z2A-S471-115
-001 XTAL FREQ 52.0MHz; Z1A-S471-160; Z2A-S471-161

Looks Start Address of FF8 Hex

Sync's perhaps to 2 MHz MCLK

Never used by CPU! Inhibits Display

116 Disconnect CR Start Lines (Disappears Screen) Defective Not Properly Displaying

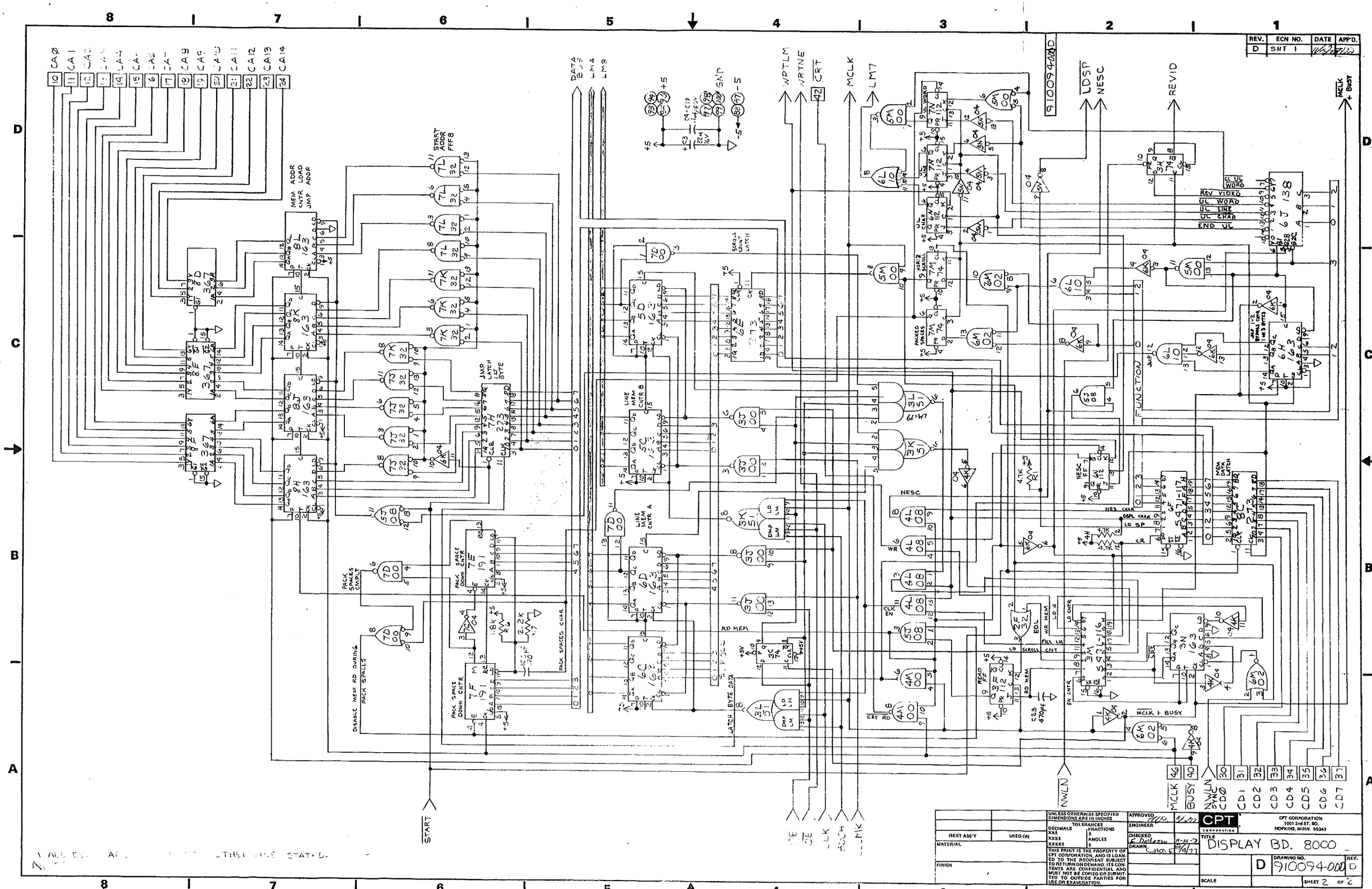
REV. | ECN NO. | DATE | APP'D.
D | SHT 1
910094-000
CA0 CA1 CA2 CA3 CA4 CA5 CA6 CA7 CA8 CA9 CA10 CA11 CA12 CA13 CA14
DATA BUS
LM8
WPTLM
WRTNE
CRT
MCLK
LM7
LDSP
NESC
REVID
MCLK + BUSY
START ADDR FFF8
MEM ADDR CNTR LOAD ADDR
JMP LATCH 1st BYTE
PACK SPACES CHAR
PACK SPACE DOWN CNTR
DISABLE MEM RD DURING PACK SPACES
LINE MEM CNTR A
LINE MEM CNTR B
SCROLL COUNT LATCH
RD MEM
LATCH BYTE DATA
FUNCTION
REV VIDEO
UL WORD
UL LINE
UL CHAR
END UL
NESC
EOL
MCLK + BUSY
START
NWLN
SYNC
CD0 CD1 CD2 CD3 CD4 CD5 CD6 CD7
UNLESS OTHERWISE SPECIFIED DIMENSIONS ARE IN INCHES
TOLERANCES
DECIMALS .XX± .XXX± .XXXX±
FRACTIONS ±
ANGLES ±
NEXT ASS'Y
USED ON
MATERIAL
FINISH
THIS PRINT IS THE PROPERTY OF CPT CORPORATION, AND IS LOANED TO THE RECIPIENT SUBJECT TO RETURN ON DEMAND. ITS CONTENTS ARE CONFIDENTIAL AND MUST NOT BE COPIED OR SUBMITTED TO OUTSIDE PARTIES FOR USE OR EXAMINATION.
APPROVED
ENGINEER
CHECKED
DRAWN
CPT CORPORATION
CPT CORPORATION 1001 2nd ST. SO. HOPKINS, MINN. 55343
TITLE DISPLAY BD. 8000
DRAWING NO. 910094-000
REV. D
SCALE
SHEET 2 OF 2

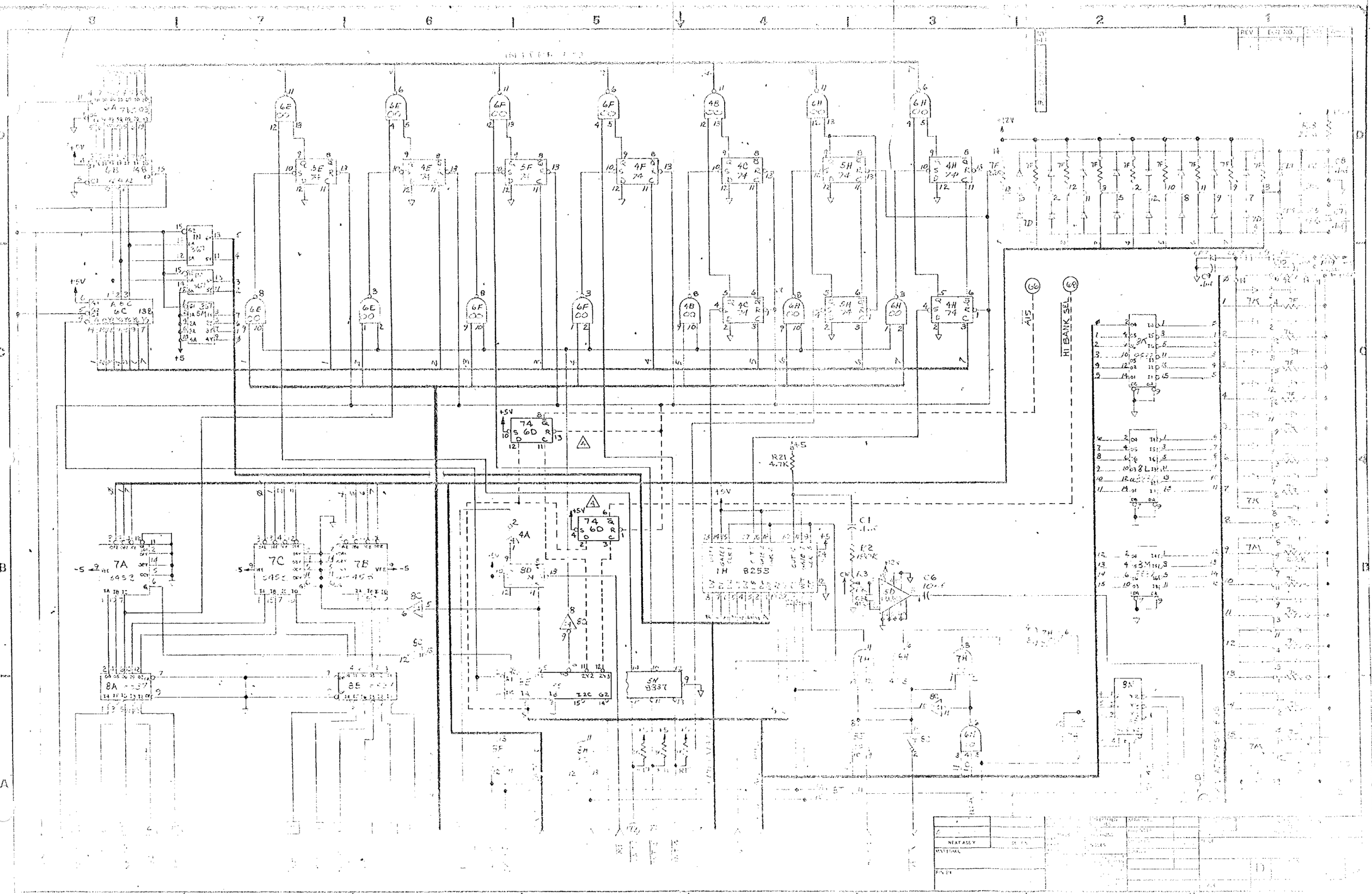
HI BANK SEL
A15
+5V
+5
+12V
-5
R21
4.7K
C1
C6
C9
1H
8255
5H
8237
7A
7B
7C
8A
8B
8K
7K
7M
NEXT ASSY
MATERIAL

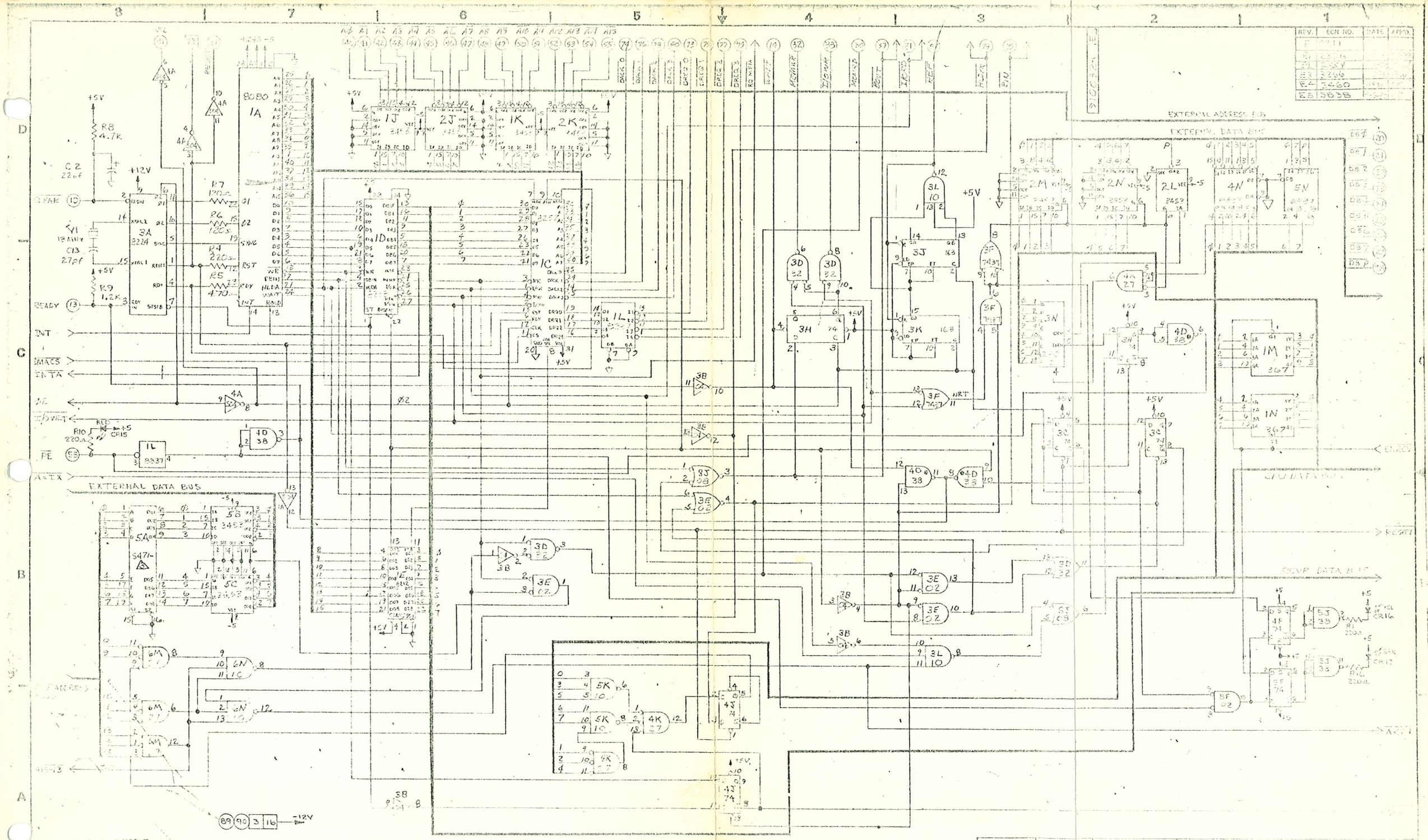
8080
1A
3A
8224
1J
2J
1K
2K
1D
1C
1L
8237
3H
3K
3L
3J
3F
7437
2M
2N
2L
4N
5N
1M
1N
4D
38
3D
32
3E
02
5J
38
5K
4K
4J
74
5A
5B
5C
6M
6N
EXTERNAL ADDRESS BUS
EXTERNAL DATA BUS
CPU DATA BUS
RCVR DATA BUS
CLEAR
READY
INT
INTA
PE
A=TX
RESET
+5V
+12V
-12V
-5V
CIRCUIT IN DASHED LINES APPLY TO -002 ONLY; -002 HAS A -122 PROM AT 5A.

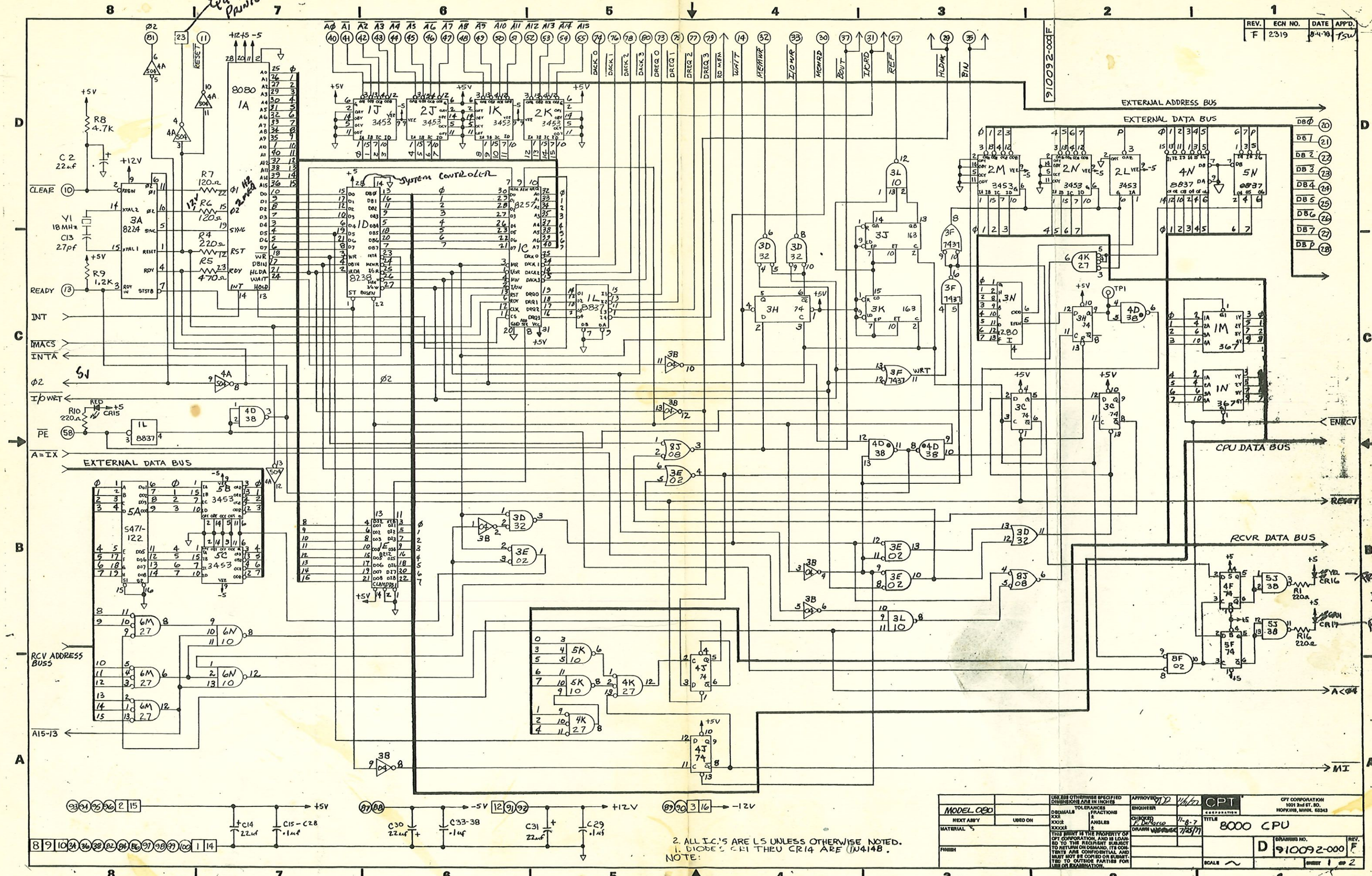

REV.	ECN NO.	DATE	APP'D.
F	2319	8-4-78	TSW

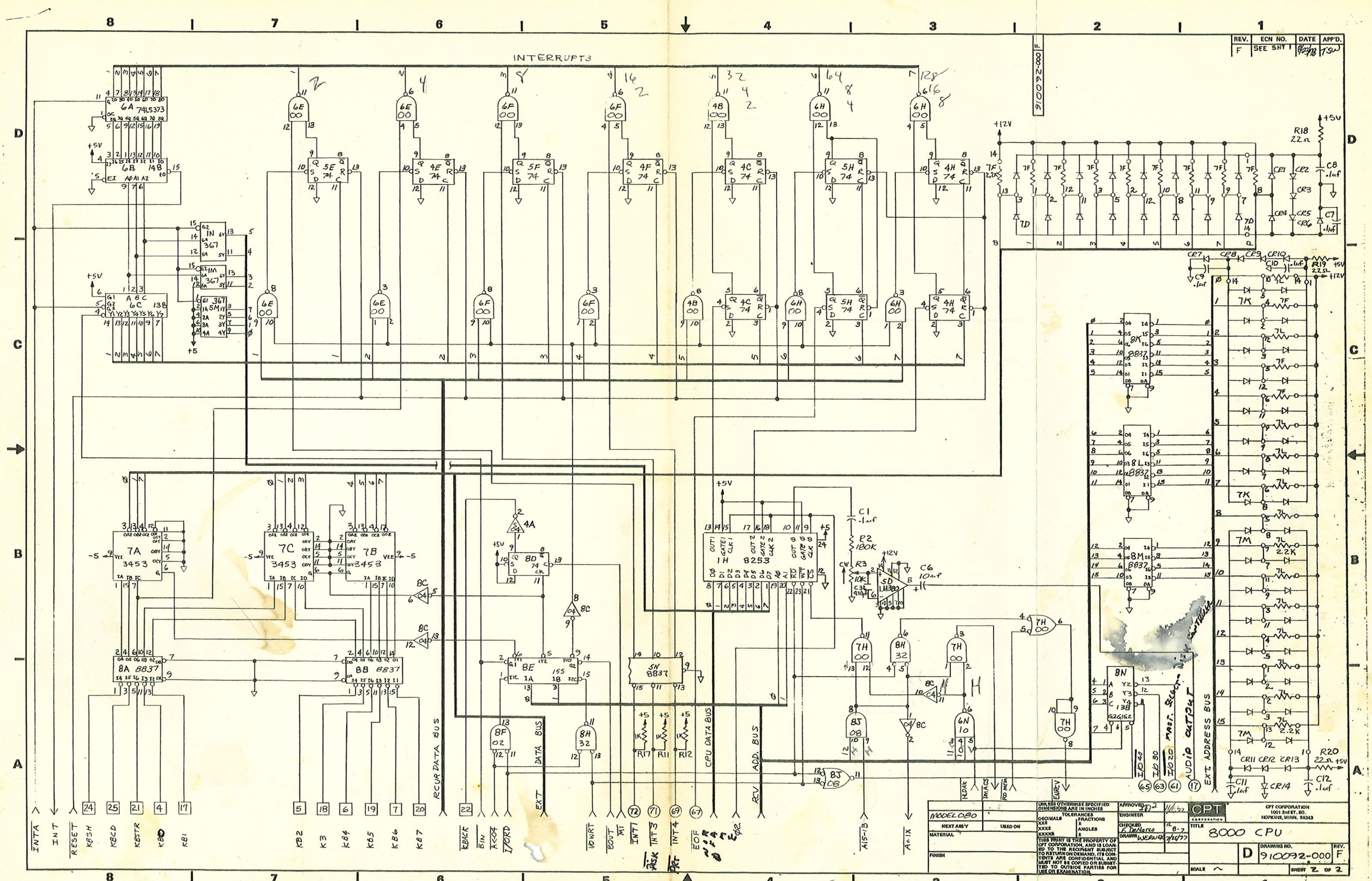
INTERRUPTS
6A 74LS373
6B 148
6C 138
5E 74
4F 74
5F 74
4F 74
4C 74
5H 74
4H 74
6H 00
6E 00
6F 00
4B 00
1N 367
1M 367
7A 3453
7C 3453
7B 3453
8A 8837
8B 8837
8D 74
8E 155
5H 8837
1H 8253
5D LM380
8K 8837
8L 8837
8M 8837
8N 138
7K
7L
7M
7H 00
8H 32
8J 08
6N 10
8C
4A
8F 02
8H 32
R18 22Ω
R19 22Ω
R20 22Ω
C8 .1uf
C7 .1uf
C9 .1uf
C10 .1uf
C11 .1uf
C12 .1uf
C1 .1uf
C6 10uf
R2 180K
R3 10K
R17
R11
R12
CR1
CR2
CR3
CR4
CR5
CR6
CR7
CR8
CR9
CR10
CR11
CR12
CR13
CR14
INTA
INT
RESET
KBSH
KBCD
KBSTR
KB0
KB1
KB2
KB3
KB4
KB5
KB6
KB7
RCVR DATA BUS
EXT DATA BUS
CPU DATA BUS
ADD. BUS
EXT ADDRESS BUS
AUDIO OUTPUT
MASS. SELECT
IO40
IO30
IO20
A15-13
A0-1X
MODEL 080
NEXT ASSY
USED ON
MATERIAL
FINISH
UNLESS OTHERWISE SPECIFIED DIMENSIONS ARE IN INCHES
TOLERANCES
THIS PRINT IS THE PROPERTY OF CPT CORPORATION, AND IS LOANED TO THE RECIPIENT SUBJECT TO RETURN ON DEMAND. ITS CONTENTS ARE CONFIDENTIAL AND MUST NOT BE COPIED OR SUBMITTED TO OUTSIDE PARTIES FOR USE OR EXAMINATION.
APPROVED
ENGINEER
CHECKED
DRAWN
CPT CORPORATION
1001 2nd ST. SO.
HOPKINS, MINN. 55343
TITLE 8000 CPU
DRAWING NO. 910092-000
REV. F
SCALE
SHEET 2 OF 2
REV. F
ECN NO. SEE SHT 1
DATE
APP'D.