REV.	ECN NO.	DATE	APP'D.
B	REL	7/16/78	[illegible]
B1	2368	9/14/78	[illegible]

910140-000 B1

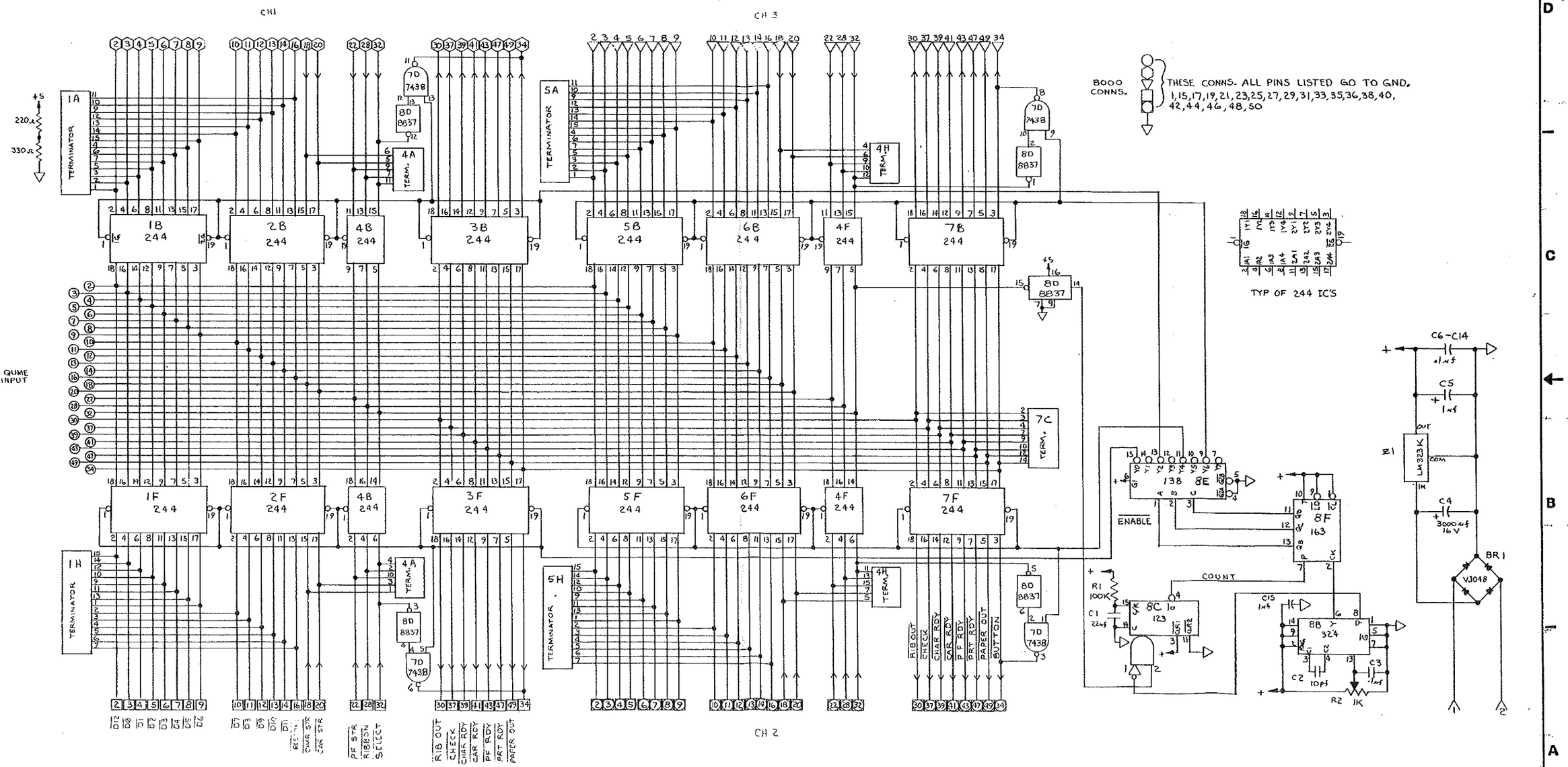

1- ALL IC CHIPS ARE LS TYPL UNLESS OTHERWISE SPECIFIED.

NEXT ASS'Y	MODEL 081	USED ON	
MATERIAL			
FINISH			

UNLESS OTHERWISE SPECIFIED DIMENSIONS ARE IN INCHES
TOLERANCES
DECIMALS .XX± .XXX± .XXXX± FRACTIONS ± ANGLES ±

THIS PRINT IS THE PROPERTY OF CPT CORPORATION, AND IS LOANED TO THE RECIPIENT SUBJECT TO RETURN ON DEMAND. ITS CONTENTS ARE CONFIDENTIAL AND MUST NOT BE COPIED OR SUBMITTED TO OUTSIDE PARTIES FOR USE OR EXAMINATION.

APPROVED		
ENGINEER		
CHECKED		
DRAWN	[illegible]	2-13-78

CPT CORPORATION
1001 2nd ST. SO.
HOPKINS, MINN. 55343

TITLE MULTI 8000/QUME INTERFACE

SCALE ~

D | DRAWING NO. 910140-000 | REV. B1

SHEET 1 OF 1

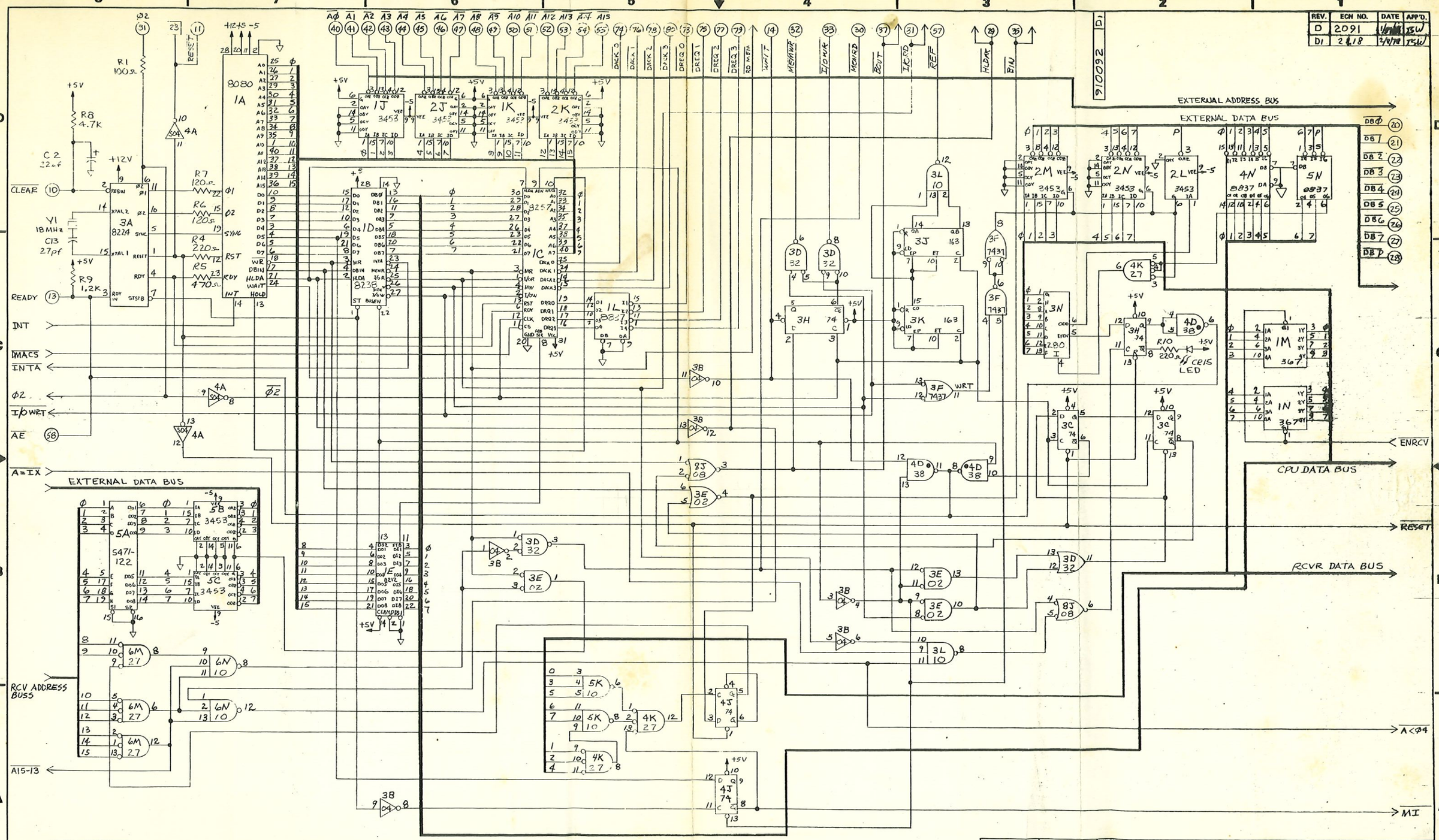

REV.	ECN NO.	DATE	APP'D.
D	2091	[illegible]	JSW
D1	2[illegible]18	2/[illegible]	JSW

910092 D1

MODEL C80

NEXT ASS'Y | USED ON

MATERIAL

FINISH

UNLESS OTHERWISE SPECIFIED DIMENSIONS ARE IN INCHES

TOLERANCES: DECIMALS XX± XXX± XXXX± ; FRACTIONS ± ; ANGLES ±

THIS PRINT IS THE PROPERTY OF CPT CORPORATION, AND IS LOANED TO THE RECIPIENT SUBJECT TO RETURN ON DEMAND. ITS CONTENTS ARE CONFIDENTIAL AND MUST NOT BE COPIED OR SUBMITTED TO OUTSIDE PARTIES FOR USE OR EXAMINATION.

APPROVED [illegible] 11/8/77
ENGINEER
CHECKED F. DeBlasco 11-8-77
DRAWN [illegible] 7/25/77

CPT CORPORATION
CPT CORPORATION 1001 2nd ST. SO. HOPKINS, MINN. 55343

TITLE 8000 CPU

DRAWING NO. 910092 REV. D1

SCALE ~ SHEET 1 OF 2

NOTE
2. ALL I.C.'S ARE LS UNLESS OTHERWISE NOTED.
[illegible] CR14 ARE 1N4148.

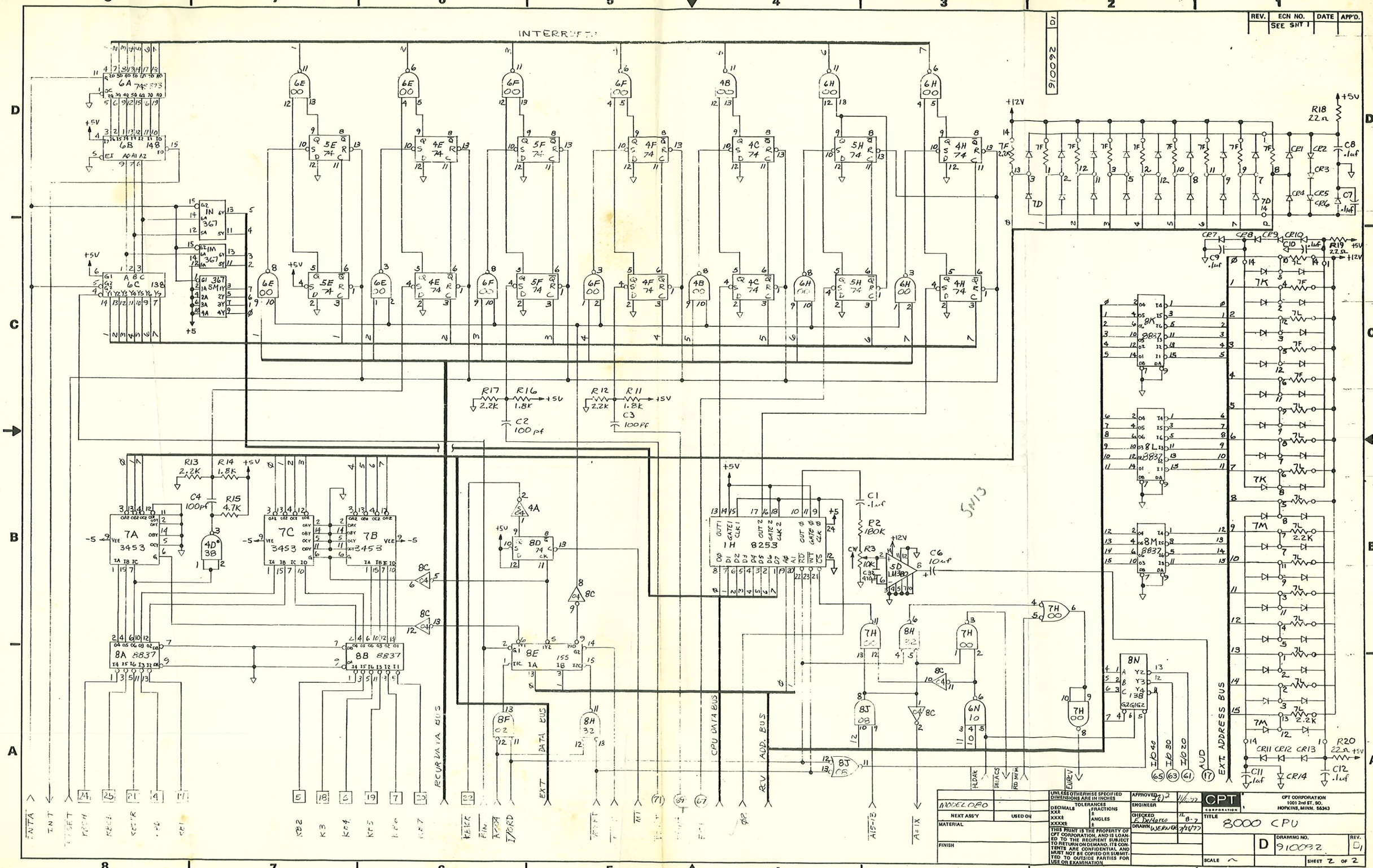
INTERRUPT
6A 74S373
6B 148
6C 138
367
5E 74
4E 74
5F 74
4F 74
4C 74
5H 74
4H 74
6E 00
6F 00
4B 00
6H 00
7A 3453
7C 3453
7B 3453
8A 8837
8B 8837
8D 74
8E 155
8F C2
8H 32
8J 08
8J C5
7H 00
7H C2
8H 32
6N 10
8J 08
8J C5
1H 8253
5D LM380
8N 138
8K 8837
8L 8837
8M 8837
7K
7L
7M
R17 2.2K
R16 1.8K
R12 2.2K
R11 1.8K
R13 2.2K
R14 1.8K
R15 4.7K
R2 180K
R3 10K
R18 22Ω
R19 22Ω
R20 22Ω
C1 .1uf
C2 100pf
C3 100pf
C4 100pf
C6 10uf
C7 .1uf
C8 .1uf
C9 .1uf
C10 .1uf
C11 .1uf
C12 .1uf
CR1 CR2 CR3 CR4 CR5 CR6 CR7 CR8 CR9 CR10 CR11 CR12 CR13 CR14
+5V
+12V
-5V
RCVR DATA BUS
CPU DATA BUS
ADD. BUS
EXT. ADDRESS BUS
DATA BUS
EXT
INTA
INT
RESET
KB2
KB3
KB4
KB5
KB6
KB7
KBCK
PIN
ADDR
IORD
A15-13
A=IX
HLDAK
RMACS
RD MEM
WREV
H0 40
H0 30
H0 20
AUD
REV. | ECN NO. | DATE | APP'D.
SEE SHT 1
01
910092
MODELORO
NEXT ASS'Y
USED ON
MATERIAL
FINISH
UNLESS OTHERWISE SPECIFIED DIMENSIONS ARE IN INCHES
TOLERANCES
DECIMALS XX± XXX± XXXX±
FRACTIONS ±
ANGLES ±
THIS PRINT IS THE PROPERTY OF CPT CORPORATION, AND IS LOANED TO THE RECIPIENT SUBJECT TO RETURN ON DEMAND. ITS CONTENTS ARE CONFIDENTIAL AND MUST NOT BE COPIED OR SUBMITTED TO OUTSIDE PARTIES FOR USE OR EXAMINATION.
APPROVED
ENGINEER
CHECKED E. DeMarco 8-7
DRAWN W. EPNER 7/26/77
CPT CORPORATION
CPT CORPORATION 1001 2nd ST. SO. HOPKINS, MINN. 55343
TITLE 8000 CPU
D
DRAWING NO. 910092
REV. D1
SCALE
SHEET 2 OF 2

OPERATION NUMBER	FIND NO.	GAUGE REF	COLOR REF	LENGTH APP.	ORIGIN		ACCESS FIND NO.	DESTINATION		ACCESS FIND NO.	REMARKS
1	34	18	BLK	2¾	XF1	L	32	XF1	1	3	
2	34		BLK	4	XF1	2	3	SW1	4	7-54	
3	43		WHT	4	LF1	N	32	SW1	3	7-54	
4	34		BLK	5	SW1	2	7-54				
5	34		↓	9	SW2	4	8				
6	34		↓	4½	RECEPT		4	WN2		30	
7	34		BLK	10	PS1 △1	1	10				OP. # 18
8	43		WHT	5½	SW1	1	7-54				
9	43		WHT	9½	SW2	1	8				
10				3½	RECEPT	WHT	4	WN1		30	
11	43		WHT	12	PS1 △1	4	10				OP. # 35
12	39		GRN	5	LF1	G	32				
13				5	RECPT	GRN	4	POINT C		8-31	
14	37		ORN	12½	SW2	2	8	PS1 △1	3	10	OP. # 29
15	40		BLU	12	SW2	5	8	PS1 △1	2	10	OP. # 24
16	△2		(BARE)	½	SW2	3	8	SW2	6	8	
17											
18	34		BLK	7	PS1	1	10	PS2 △1	1	11	OP. # 19
19	34			13	PS 2	1	11				
20	44		↓	5½	F1	1	12	T1	1	6	
21	34		BLK	13	PS 3 △1	1	9				OP. # 22
22					AC CABLE	BLK	28	PS 3	1	9	
23											
24	40		BLU	7½	PS 1	2	10	PS 2 △1	2	11	OP. # 25
25	40		↓	13	PS 2	2	11	T1 △1	2	6	OP. # 26
26	40		BLU	12½	T1	2	6	PS 3 △1	3	9	OP. # 27
27					AC CABLE	BLU	28	PS 3	3	9	
28											
29	37		ORN	8	PS 1	3	10	PS 2 △1	3	11	OP. # 30
30	37		ORN	14	PS 2	3	11				
31	44		BLK	5½	F1	2	12	T 1	3	6	
32	37		ORN	11	PS 3 △1	2	9				OP. # 33
33					AC CABLE	ORN	28	PS 3	2	9	
34											
35	43		WHT	8½	PS 1	4	10	PS 2 △1	4	11	OP. # 36
36	43		↓	14½	PS 2	4	11	T1 △1	4	6	OP. # 37
37	43		WHT	10½	T1	4	6	PS3 △1	4	9	OP. # 38
38					AC CABLE	WHT	28	PS 3	4	9	
39	△2		(BARE)	1	T1	6	6	T1	7	6	
40	42		GRY	6	T1	5	6	PCB	12	33	
41	42	↓	GRY	6½	T1	8	6	PCB	13	33	
42	35	18	BRN	4½	PS2	–	11-56	PCB	11	33	

OPERATION NUMBER	FIND NO.	GAUGE REF.	COLOR REF.	LENGTH APP.	ORIGIN		ACCESS FIND NO.	DESTINATION		ACCESS FIND NO.	REMARKS
43	41	18	VIO	7½	PS 2	+	11-56	PCB	10	33	
44	34		BLK	6½	PS 1	–	10-56	PCB	1	33	
45	34		BLK	6½	PS 1	–	10-56	PCB	2	33	
46	36		RED	5	PS 1	+	10-56	PCB	5	33	
47	36		RED	5	PS 1	+	10-56	PCB	6	33	
48	33		YEL	5	PS 3	+	9	PCB	7	33	
49	34	↓	BLK	5	PS 3	COM	9	PCB	8	33	
50	40	18	BLU	5½	PS 3	–	9	PCB	9	33	
51	44	22	BLK	11	SW3	1	29	PCB	3	33	
52	44			11	SW3	2	29	PCB	4	33	
53	44			5	R1	1	46	Z1	3	47	
54	44			1½	Z1	1	47	C1	+	9	
55	44	↓	↓	9½	Z1	2	47	PCB	14	33	
56	44	22	BLK	3	R1	2	46	C1	–	9	

NOTES:

△1 THIS END TO BE LEFT LOOSE UNTIL OPERATION NO. FOUND IN REMARKS COLUMN.

△2 COMPONENT LEADS MAY BE USED.

△3 SW2 TO BE ORIENTED WITH ⓑ 220V POLES AT THIS END.

△4 ⓒ FOR -001 POWER SUPPLY REWORK POWER SUPPLY PER FIELD KIT # 900040-000.

930180-00X D

REV.	ECN NO.	DATE	APP'D.
A	REL	11-22-77	[illegible]
B	2001	12-2-77	TSW
C	2239	5/9/78	TSW
D	2375	9/19/78	TSW

Sygery to Disc
Tough to Use
2"x3"s 127 Per Foot
1 Section of Cpm and Last
For Auto Saver in Mag
Bench Cards
Free Wheel

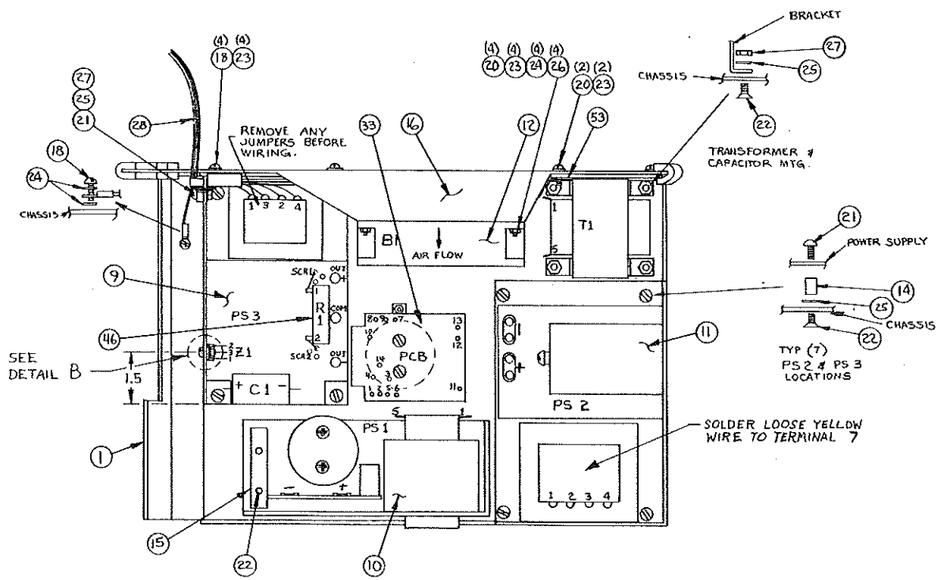

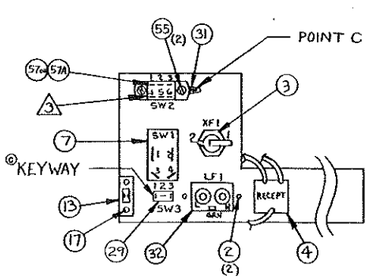

VIEW A-A

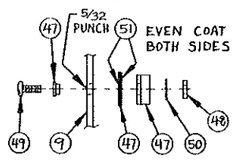

DETAIL B

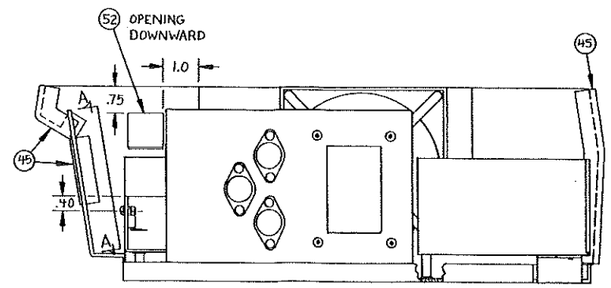

ⓑ△4	58	900040-000	1		50 HZ FIELD KIT	-001 ONLY	
ⓑ	57A	880031-000	(1)		SWITCH - SLIDE, DUAL POWER	SW2	
	57	880030-000	(1)		SLIDE SWITCH, DPDT	SW2	
	56	740016-006	6		TERMINAL RING		
	55	300403-200	2		SCREW-BND HD 4-40×3/16		
	54	740015-000	4		TERMINAL LUG		
	53	360058-000	1		INSULATOR, WIREGUARD		
	52	800021-000	1		CABLE CLAMP		
	51	TL-8030	A/R		THERMAL COMPOUND		
	50	320008-004	1		WASHER-LOCK #4 EXT		
	49	300405-200	1		SCREW-BND HD #4-40×5/16		
	48	310000-004	1		NUT-#4-40		
	47	520042-005	1		REGULATOR 7905		
	46	670007-100	1		RESISTOR, WIREWOUND 10Ω 20W		
	45	360057-000	9"		FOAM STRIP ¼"×1.0"		
	44	813022-000	52"		WIRE-STRANDED 22 GA	BLACK	
	43	813018-999	65"		WIRE-STRANDED 18GA	WHITE	
	42	813018-888	13"		WIRE-STRANDED 18GA	GRAY	
	41	813018-777	8"		WIRE-STRANDED 18GA	VIOLET	
	40	813018-666	52"		WIRE-STRANDED 18GA	BLUE	
	39	813018-555	5"		WIRE-STRANDED 18GA	GREEN	
	38	813018-444	5"		WIRE-STRANDED 18GA	YELLOW	
	37	813018-333	46"		WIRE-STRANDED 18GA	ORANGE	
	36	813018-222	10"		WIRE-STRANDED 18GA	RED	
	35	813018-111	5"		WIRE-STRANDED 18GA	BROWN	
	34	813018-000	87"		WIRE-STRANDED 18GA	BLACK	
	33	910120-000	1		CIRCUIT CARD ASS'Y	PCB	
	32	740077-006	1		LINE FILTER	LF1	
	31	740023-004	1		TERMINAL LUG		
	30	740011-003	2		WIRE NUT (NOT SHOWN)	WN1, WN2	
ⓒ	29	740040-000	1		SWITCH, PUSHBUTTON SPDT	SW3	
	28	930181-000	1		AC-CABLE		
	27	310000-008	18		NUT-#8-32		
	26	310000-006	4		NUT-#6-32		
	25	320008-008	15		WASHER-LOCK #8 EXT		
	24	320008-006	11		WASHER-LOCK #6 EXT		
	23	320009-006	10		WASHER-FLAT #6		
	22	300806-300	18		SCREW-FL HD #8-32×3/8 LG		
	21	300806-200	9		SCREW-BND HD #8-32×3/8 LG		
	20	300609-200	6		SCREW-BND HD #6-32×3/8 LG		
	19						
	18	300604-200	5		SCREW-BND HD #6-32×1/4 LG		
	17	330000-104	2		POP RIVET		
	16	200042-000	1		FAN SHROUD		
	15	110197-000	2		NUT BAR		
	14	320003-809	8		THD SPACER-5/8 LG		
	13	330041-000	1		RECEPTACLE-¼ TURN		
	12	730023-001	1		FAN	B1	
	11	980025-000	1		POWER SUPPLY 24V, 3.8A	PS2	
	10	980024-000	1		POWER SUPPLY 5V, 11A	PS1	
	9	980023-000	1		POWER SUPPLY +12V, -12V, 1A	PS 3	
	8		1				
	7	880029-000	1		POWER SWITCH	SW1	
	6	750011-000	1		TRANSFORMER-F-219U	T1	
	5	740073-000	1		POWER CORD		
	4	740006-000	1		RECEPTACLE		
	3	740002-000	1		FUSE HOLDER	XF1	
	2	330022-204	2		SCREW-ALLEN HD BLK X ¼ LG		
	1	110175-000	1		CHASSIS-MAIN P.S.		
F/N	PART NO.	REQ QTY	EDIT QTY	DESCRIPTION	MFGR. IDENT	DIST QTY	

	MODEL 080	NEXT ASS'Y	USED ON
MATERIAL			

UNLESS OTHERWISE SPECIFIED DIMENSIONS ARE IN INCHES. TOLERANCES: DECIMALS .XX ±.03, .XXX ±.010, .XXXX ±.005; FRACTIONS ±; ANGLES ±. THIS PRINT IS THE PROPERTY OF CPT CORPORATION, AND IS LOANED TO THE RECIPIENT SUBJECT TO RETURN ON DEMAND. ITS CONTENTS ARE CONFIDENTIAL AND MUST NOT BE COPIED OR SUBMITTED TO PREJUDICE PARTIES FOR USE OTHER THAN

APPROVED	[illegible]	11/29/77
ENGINEER		
CHECKED	F. [illegible]	11-23-77
DRAWN	[illegible]	9-6-77

CPT CORPORATION
1001 2nd ST. SO.
HOPKINS, MINN. 55343

TITLE POWER SUPPLY-8000

SIZE D | DRAWING NO. 930180-00X △4 | REV. D

SHEET 2 | 15" C SIZE | SCALE ~ | SHEET 1 OF 2

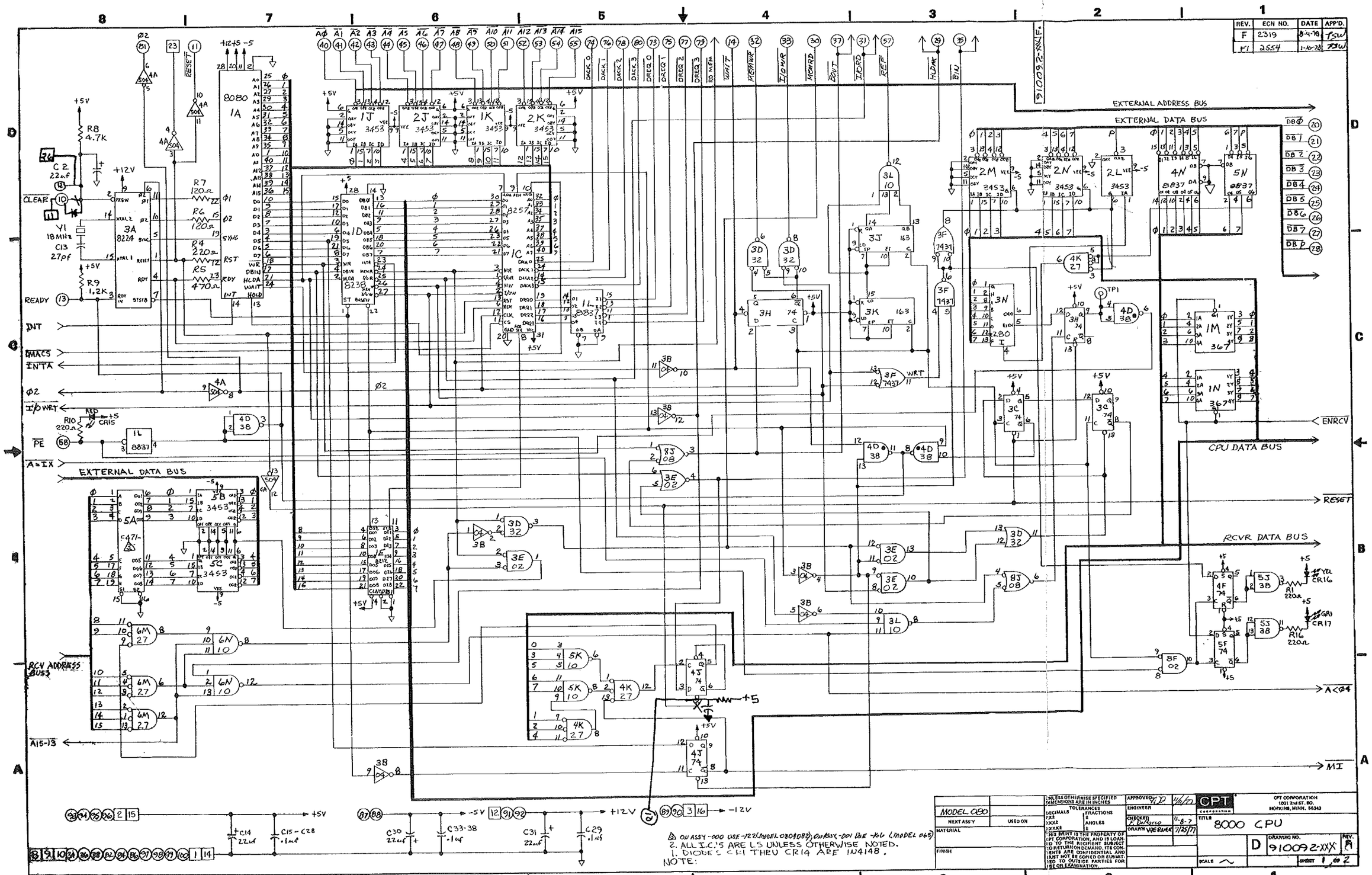
EXTERNAL ADDRESS BUS
EXTERNAL DATA BUS
CPU DATA BUS
RCVR DATA BUS
RCV ADDRESS BUS
8080 1A
8224 3A
8228 1D
8257 1C
8837 1L
3453 1J 2J 1K 2K 2M 2N 4N 5N 5A 5B 5C
2L 3453
2B80 1I
367 1M 1N
CLMP20
CRIS
CR16
CR17
MODEL 080
NEXT ASS'Y
USED ON
MATERIAL
FINISH
UNLESS OTHERWISE SPECIFIED DIMENSIONS ARE IN INCHES
TOLERANCES
DECIMALS .XX ±.03 .XXX ±.010 .XXXX ±.005
FRACTIONS ±1/32
ANGLES ±1°
THIS PRINT IS THE PROPERTY OF CPT CORPORATION, AND IS LOANED TO THE RECIPIENT SUBJECT TO RETURN ON DEMAND. ITS CONTENTS ARE CONFIDENTIAL AND MUST NOT BE COPIED OR SUBMITTED TO OUTSIDE PARTIES FOR USE OR EXAMINATION.
APPROVED
ENGINEER
CHECKED F. DeMarco 11-8-7
DRAWN W. REVER 7/25/77
CPT corporation
CPT CORPORATION 1001 2nd ST. SO. HOPKINS, MINN. 55343
TITLE 8000 CPU
SCALE
D
DRAWING NO. 91009 2-XXX
REV. A
SHEET 1 OF 2
NOTE:
1. DIODES CR1 THRU CR14 ARE 1N4148.
2. ALL I.C.'S ARE LS UNLESS OTHERWISE NOTED.
3. ON ASSY-000 USE -122 (MODEL 080 & 080B); ON ASSY-001 USE -166 (MODEL 065)

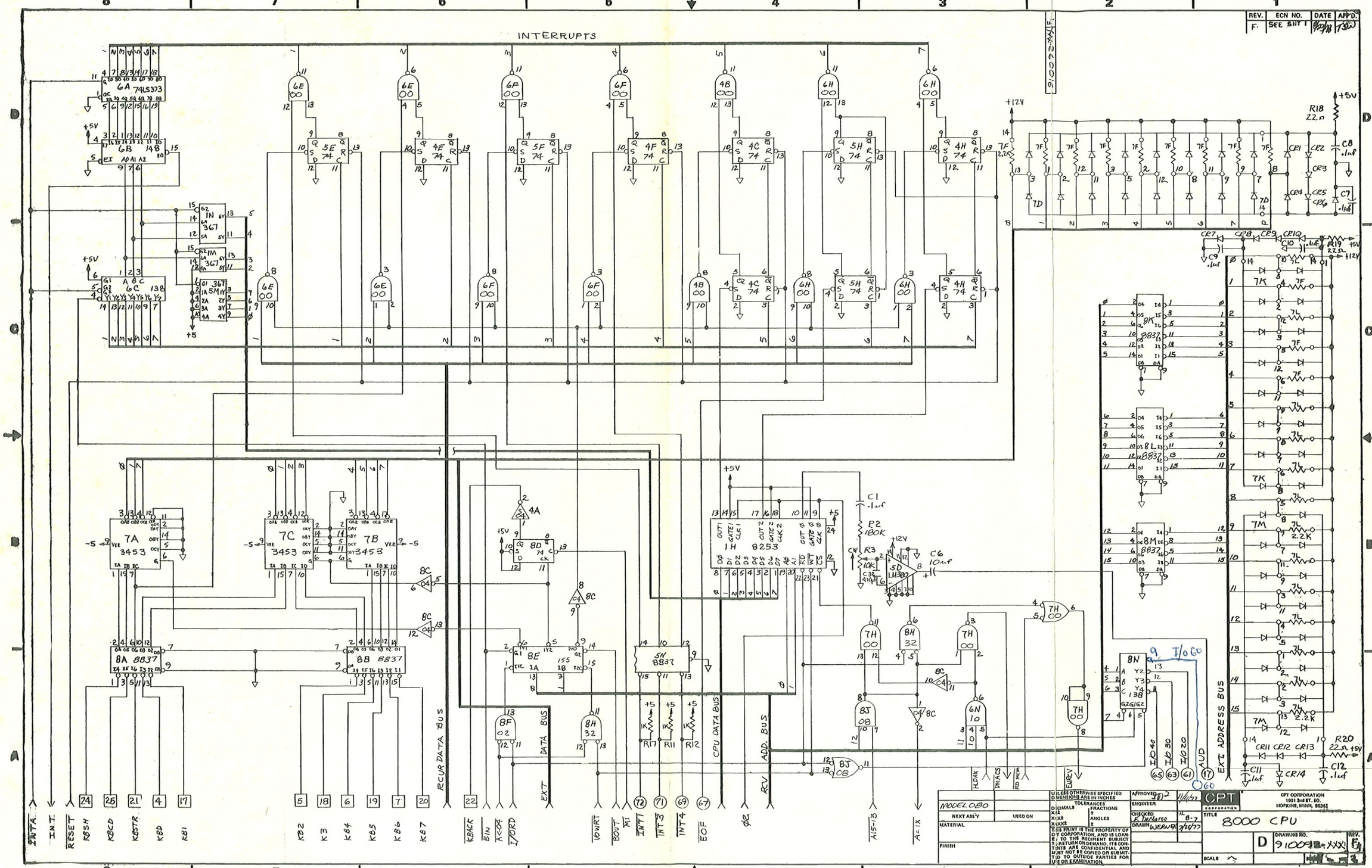
INTERRUPTS
6A 74LS373
6B 74S
6C 138
1N 367
1M 367
5M 367
5E 74
4E 74
5F 74
4F 74
4C 74
5H 74
4H 74
7A 3453
7C 3453
7B 3453
8A 8837
8B 8837
8D 74
8E 155
1H 8253
5K 8837
8K 8837
8L 8837
8M 8837
8N 138
5D LM339
7H 00
8H 32
8J 08
6N 10
8F 02
R18 22Ω
R19 22Ω
R20 22Ω
R2 180K
R3 10K
C1 .1uf
C6 10uf
C8 .1uf
C7 .1uf
C9 .1uf
C10 .1uf
C11 .1uf
C12 .1uf
CR11 CR12 CR13
CR14
INTA
INT
RESET
KBSH
KBCD
KBSTR
KBD
KB1
KB2
K3
KB4
KB5
KB6
KB7
KBACK
BIN
ACK
IORD
IOWRT
BOUT
INT1
INT3
INT4
EOF
Ø2
A15-13
A-1X
RCVR DATA BUS
DATA BUS
EXT
CPU DATA BUS
ADD. BUS
RCV
EXT. ADDRESS BUS
HLDAK
DMACS
RD MEM
EXREV
IO40
IO30
IO20
AUD
9. I/O 60
NODEL 080
NEXT ASS'Y
USED ON
MATERIAL
FINISH
UNLESS OTHERWISE SPECIFIED DIMENSIONS ARE IN INCHES
TOLERANCES
DECIMALS X.X± X.XX± X.XXX±
FRACTIONS ±
ANGLES ±
THIS PRINT IS THE PROPERTY OF CPT CORPORATION, AND IS LOANED TO THE RECIPIENT SUBJECT TO RETURN ON DEMAND. ITS CONTENTS ARE CONFIDENTIAL AND MUST NOT BE COPIED OR SUBMITTED TO OUTSIDE PARTIES FOR USE OR EXAMINATION.
APPROVED
ENGINEER
CHECKED E. DeMarco
DRAWN
CPT CORPORATION
CPT CORPORATION 1001 2nd ST. SO. HOPKINS, MINN. 55343
TITLE 8000 CPU
D
DRAWING NO. 910099-XXX
REV. F
SCALE

REV.	ECN NO.	DATE	APP'D.
B	2097	1/9/78	TSW
B1	2169	3/4/78	TSW

910093 B1

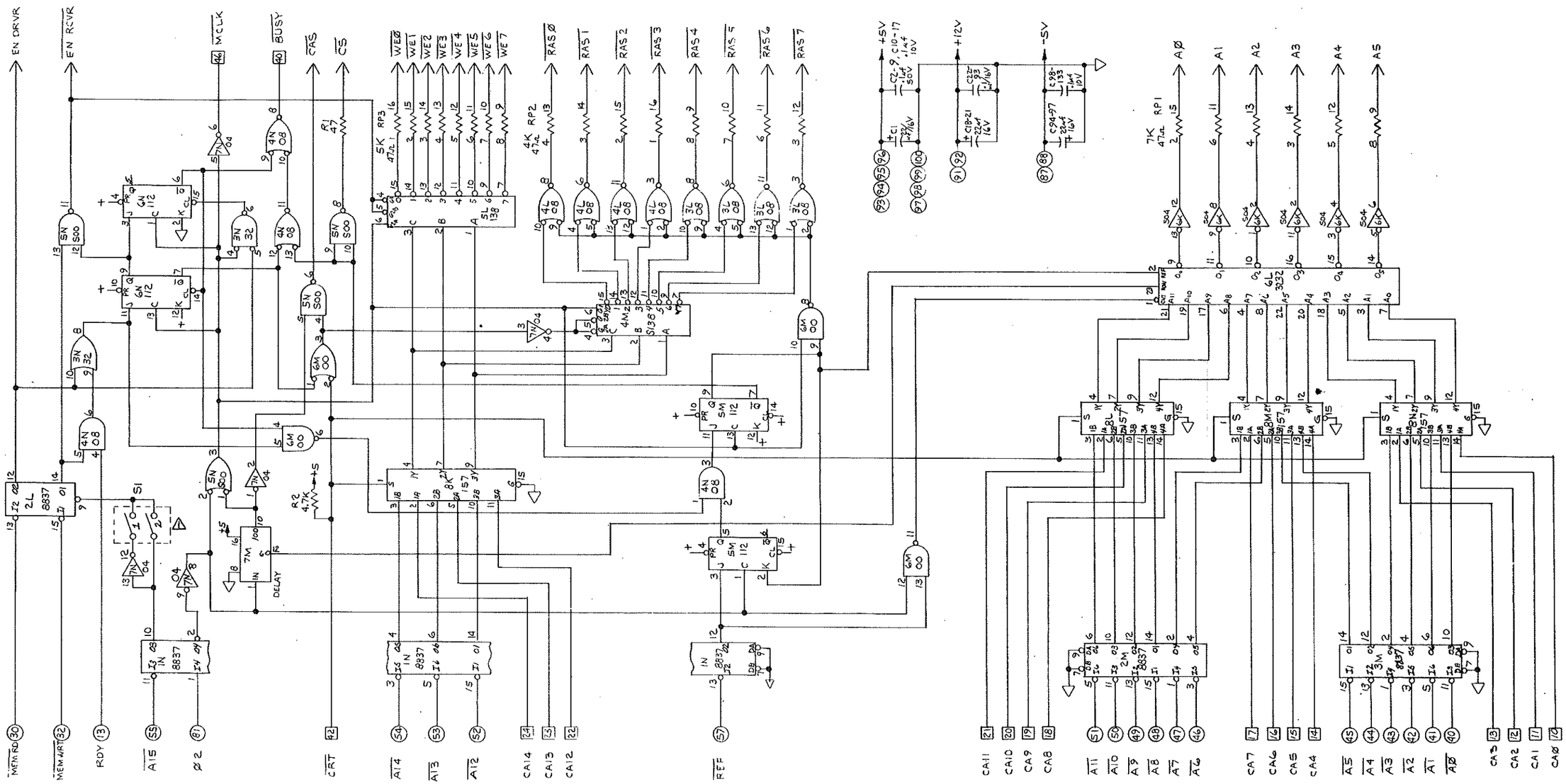

△ All IC's are LS unless otherwise stated

△ FOR MEMORY HIGH SET S1-1 ON; S1-2 OFF

FOR MEMORY LOW SET S1-1 OFF; S1-2 ON

NOTE

NEXT ASS'Y	USED ON	
MATERIAL		
FINISH		

UNLESS OTHERWISE SPECIFIED DIMENSIONS ARE IN INCHES

TOLERANCES: DECIMALS .XX ±, .XXX ±, .XXXX ±; FRACTIONS ±; ANGLES ±

THIS PRINT IS THE PROPERTY OF CPT CORPORATION, AND IS LOANED TO THE RECIPIENT SUBJECT TO RETURN ON DEMAND. ITS CONTENTS ARE CONFIDENTIAL AND MUST NOT BE COPIED OR SUBMITTED TO OUTSIDE PARTIES FOR USE OR EXAMINATION.

APPROVED 6/1/78 ENGINEER CHECKED 8-7 DRAWN 8-5-77

CPT CORPORATION
1001 2nd ST. SO.
HOPKINS, MINN. 55343

TITLE MEMORY BD - 8000

DRAWING NO. 910093 REV. B1

SCALE ~ SHEET 1 OF 2

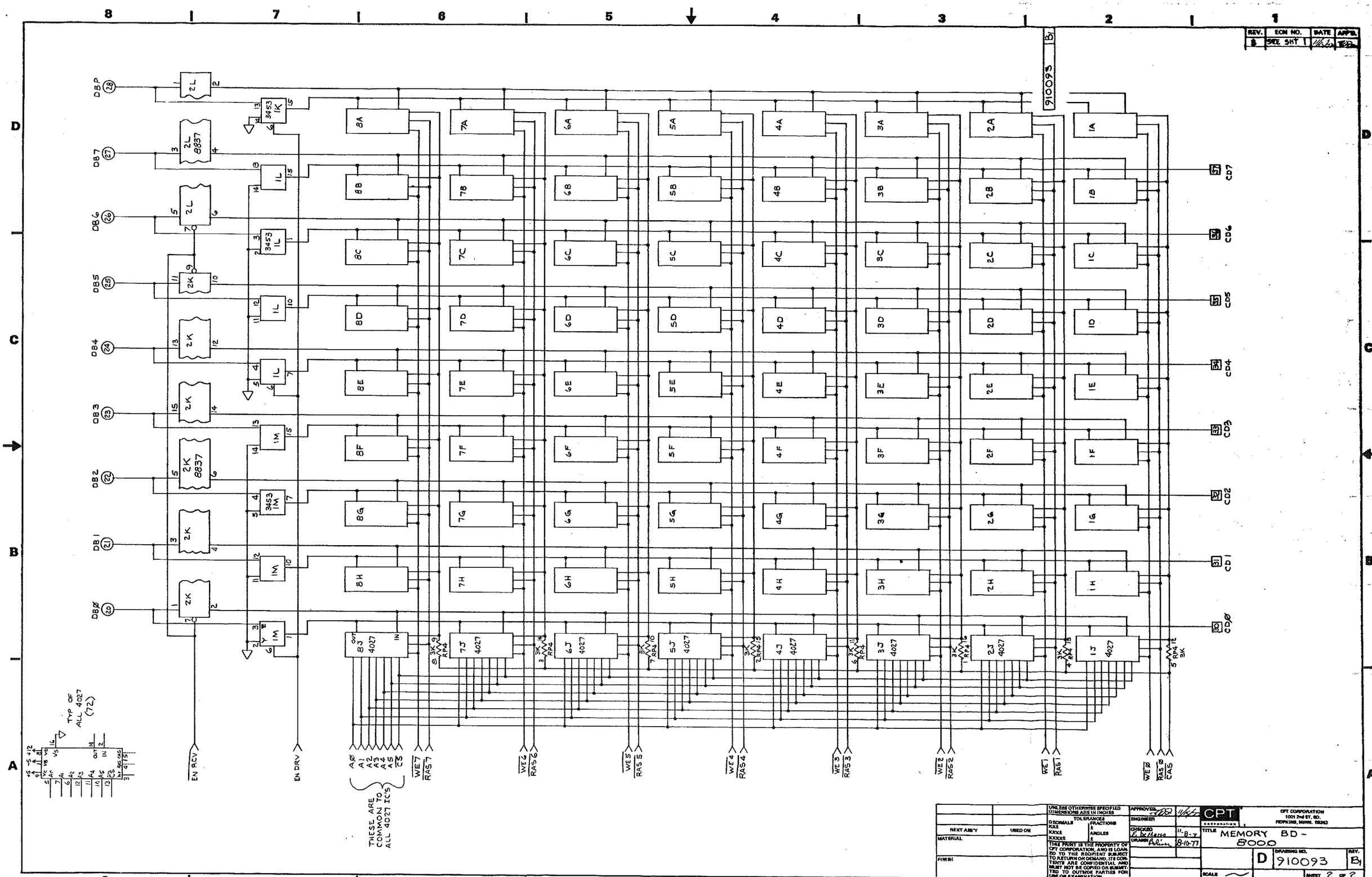
REV. | ECN NO. | DATE | APPR.
B | SEE SHT 1
910093 B1
DBP
DB7
DB6
DB5
DB4
DB3
DB2
DB1
DBØ
CD7
CD6
CD5
CD4
CD3
CD2
CD1
CDØ
EN RCV
EN DRV
AØ A1 A2 A3 A4 A5 CS
THESE ARE COMMON TO ALL 4027 IC'S
WE7 RAS7
WE6 RAS6
WE5 RAS5
WE4 RAS4
WE3 RAS3
WE2 RAS2
WE1 RAS1
WEØ RASØ CASØ
TYP OF ALL 4027 (72)
NEXT ASS'Y
USED ON
MATERIAL
FINISH
UNLESS OTHERWISE SPECIFIED DIMENSIONS ARE IN INCHES
TOLERANCES
DECIMALS XX± XXX± XXXX±
FRACTIONS ±
ANGLES ±
THIS PRINT IS THE PROPERTY OF CPT CORPORATION, AND IS LOANED TO THE RECIPIENT SUBJECT TO RETURN ON DEMAND. ITS CONTENTS ARE CONFIDENTIAL AND MUST NOT BE COPIED OR SUBMITTED TO OUTSIDE PARTIES FOR USE OR EXAMINATION.
APPROVED
ENGINEER
CHECKED 11-8-77
DRAWN 8-10-77
CPT CORPORATION
CPT CORPORATION 1001 2nd ST. NO. HOPKINS, MINN. 55343
TITLE MEMORY BD - 8000
D
DRAWING NO. 910093
REV. B1
SCALE
SHEET 2 OF 2

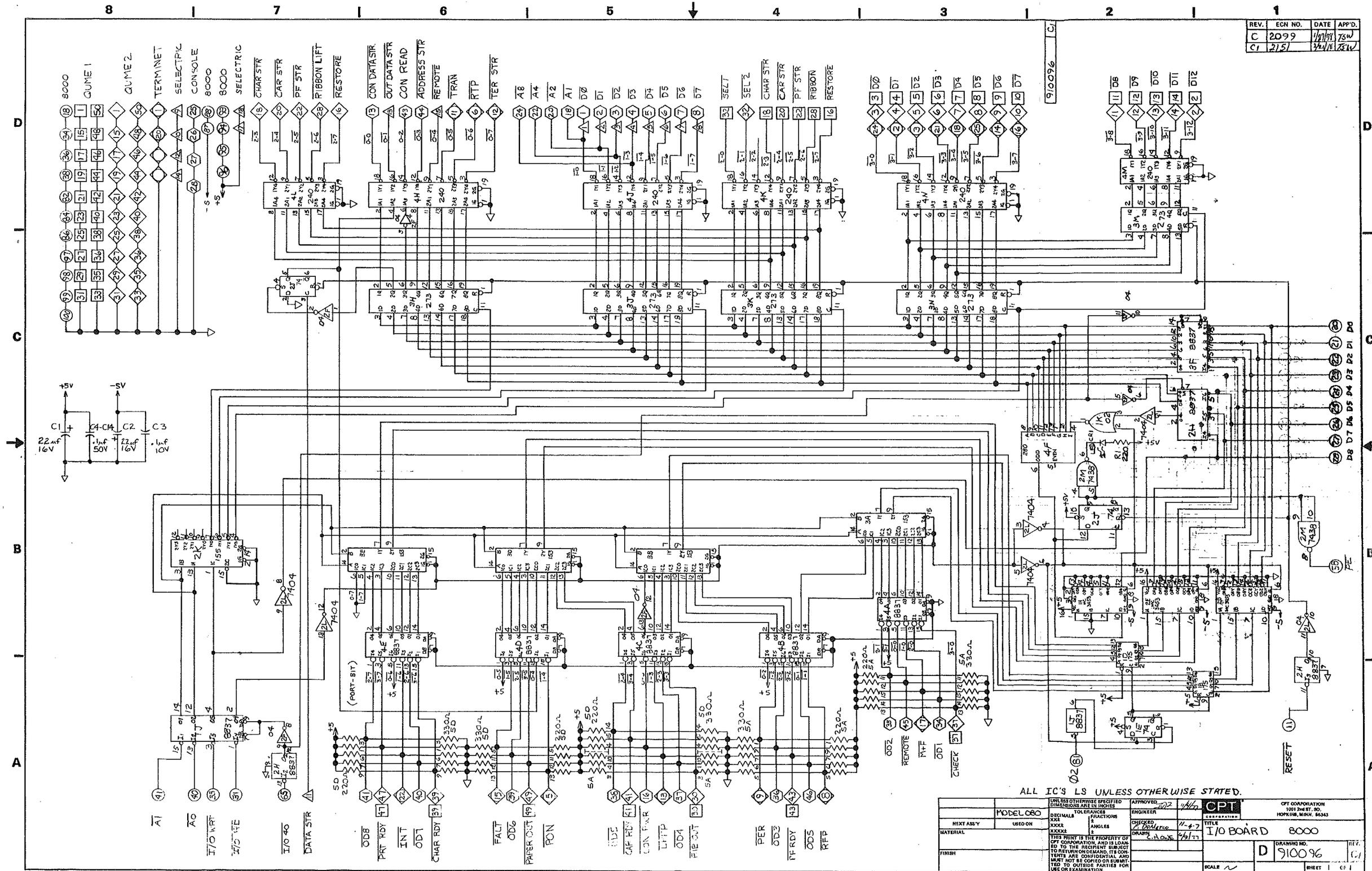
REV. | ECN NO. | DATE | APP'D.
C | 2099 | 1/27/78 | TSW
C1 | 2151 | 4/4/78 | TSW
910096
QUME 1
QUME 2
TERMINET
SELECTRIC
CONSOLE
8000
CHAR STR
CAR STR
PF STR
RIBBON LIFT
RESTORE
CON DATA STR.
OUT DATA STR
CON READ
ADDRESS STR
REMOTE
TRAN
RTP
TER STR
SELECT
SEL 2
RIBBON
(PORT-BIT)
ALL IC'S LS UNLESS OTHERWISE STATED.
MODEL 080
NEXT ASS'Y
USED ON
MATERIAL
FINISH
UNLESS OTHERWISE SPECIFIED DIMENSIONS ARE IN INCHES
TOLERANCES
DECIMALS
FRACTIONS
ANGLES
THIS PRINT IS THE PROPERTY OF CPT CORPORATION, AND IS LOANED TO THE RECIPIENT SUBJECT TO RETURN ON DEMAND. ITS CONTENTS ARE CONFIDENTIAL AND MUST NOT BE COPIED OR SUBMITTED TO OUTSIDE PARTIES FOR USE OR EXAMINATION.
APPROVED
ENGINEER
CHECKED
DRAWN
CPT CORPORATION
CPT CORPORATION
1001 2nd ST. SO.
HOPKINS, MINN. 55343
TITLE
I/O BOARD 8000
DRAWING NO.
910096
REV.
C1
SCALE
SHEET 1 OF 1

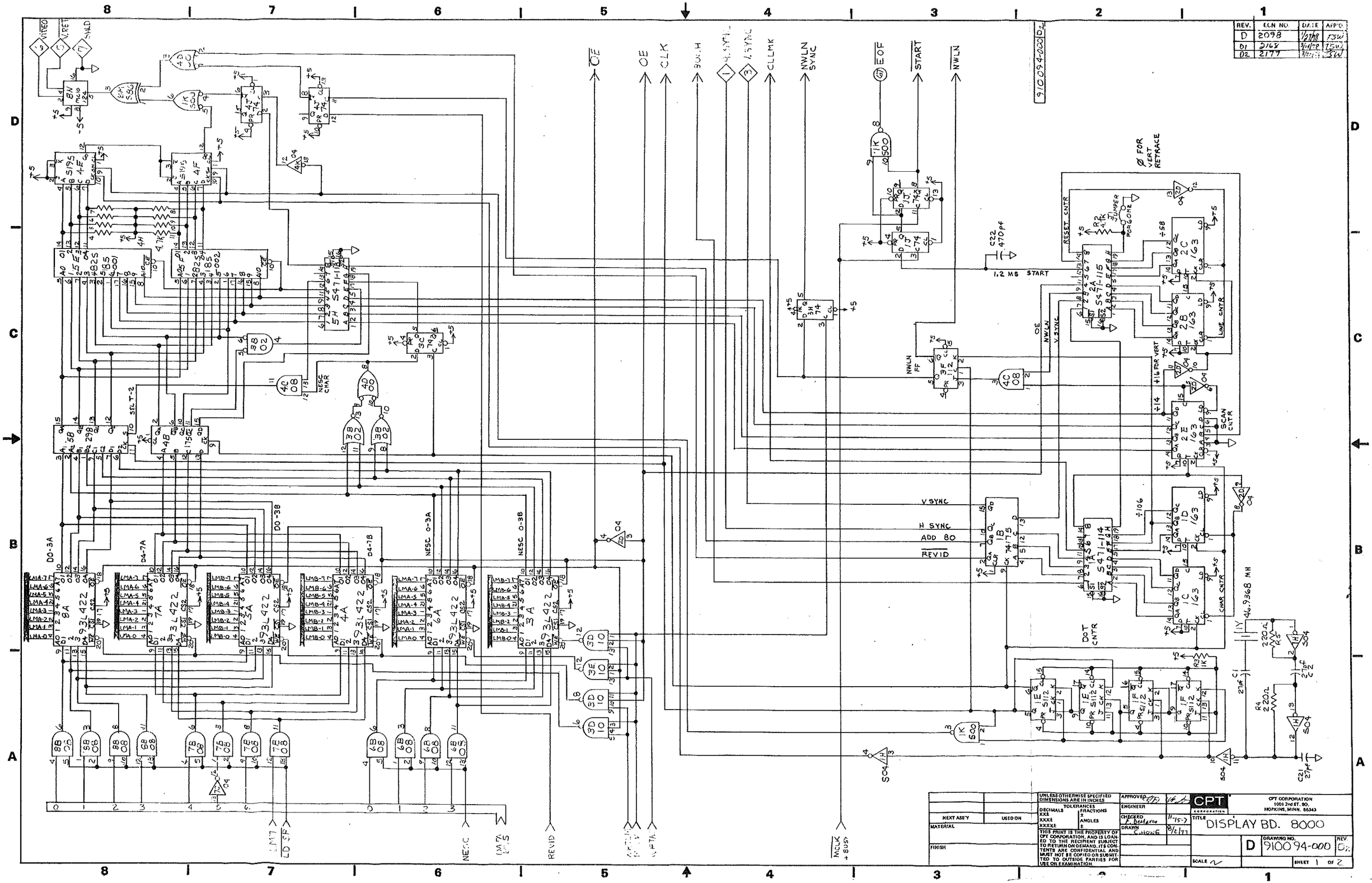

REV.	ECN NO.	DATE	APP'D
D	2098	1/27/78	TSW
D1	2148	3/14/78	TSW
D2	2177	3/[illegible]	TSW

9100 94-000 D2

UNLESS OTHERWISE SPECIFIED DIMENSIONS ARE IN INCHES
TOLERANCES
DECIMALS .XX ± .XXX ± .XXXX ±
FRACTIONS ±
ANGLES ±

THIS PRINT IS THE PROPERTY OF CPT CORPORATION, AND IS LOANED TO THE RECIPIENT SUBJECT TO RETURN ON DEMAND. ITS CONTENTS ARE CONFIDENTIAL AND MUST NOT BE COPIED OR SUBMITTED TO OUTSIDE PARTIES FOR USE OR EXAMINATION.

NEXT ASS'Y | USED ON
MATERIAL
FINISH

APPROVED
ENGINEER
CHECKED 11-15-77
DRAWN 8/2/77

CPT CORPORATION
1001 2nd ST. SO.
HOPKINS, MINN. 55343

TITLE DISPLAY BD. 8000

DRAWING NO. 9100 94-000 D REV. D2

SCALE ~ SHEET 1 OF 2