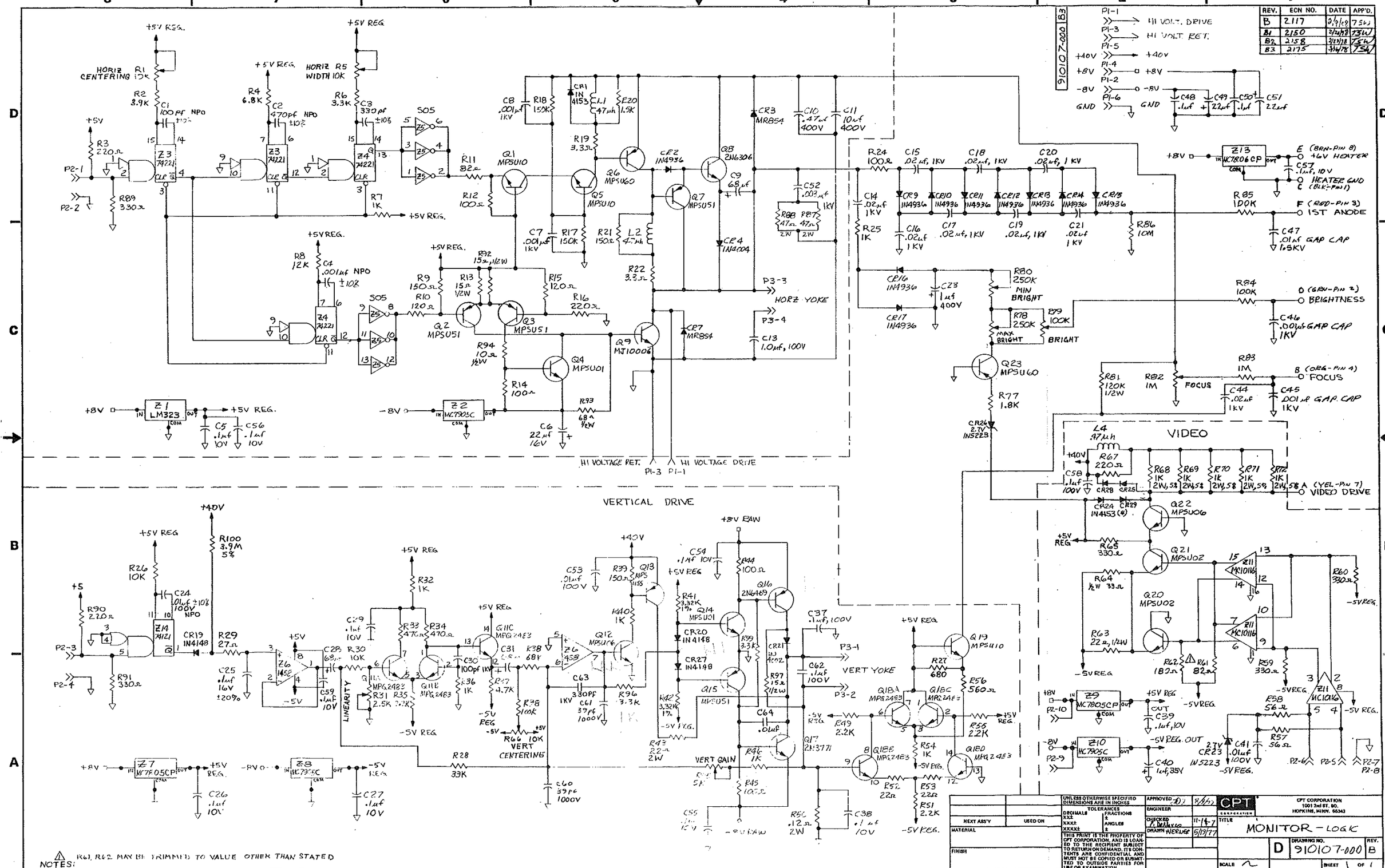

REV.	ECN NO.	DATE	APP'D.
B	2117	2/9/77	TSW
B1	2150	2/24/77	TSW
B2	2158	3/31/78	TSW
B3	2175	3/14/78	TSW

REV.	ECN NO.	DATE	APPD.
D	2102	1-24-78	TEW
D1	2179	2-20-78	TEW

910117

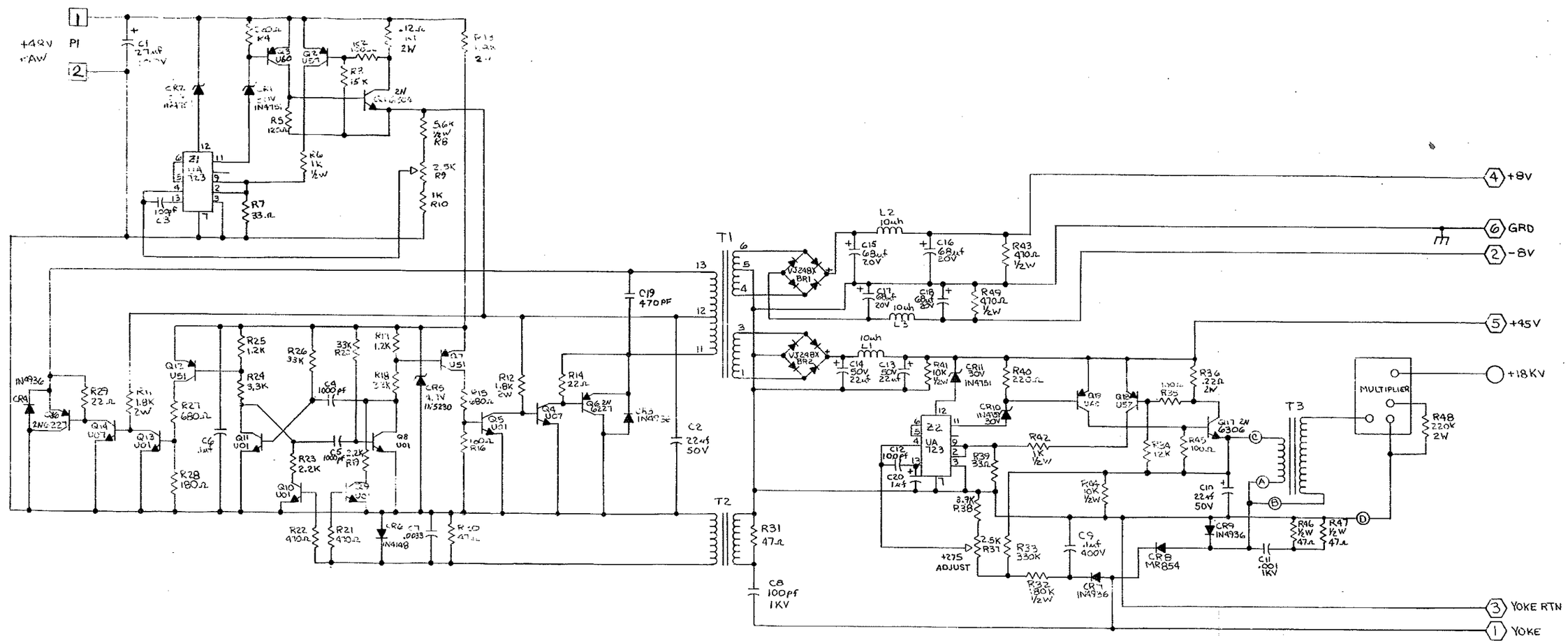

NEXT ASS'Y	MODELORO	USED ON	
MATERIAL			
FINISH			

UNLESS OTHERWISE SPECIFIED DIMENSIONS ARE IN INCHES
TOLERANCES
DECIMALS XX± XXX± XXXX±
FRACTIONS ±
ANGLES ±

THIS PRINT IS THE PROPERTY OF CPT CORPORATION, AND IS LOANED TO THE RECIPIENT SUBJECT TO RETURN ON DEMAND. ITS CONTENTS ARE CONFIDENTIAL AND MUST NOT BE COPIED OR SUBMITTED TO OUTSIDE PARTIES FOR USE OR EXAMINATION.

APPROVED
ENGINEER
CHECKED
DRAWN L.HOWE 7-30-77

CPT CORPORATION
CPT CORPORATION
1001 2nd ST. SO.
HOPKINS, MINN. 55343

TITLE MONITOR POWER SUPPLY

D | DRAWING NO. 910117 | REV. D1

SCALE | SHEET OF

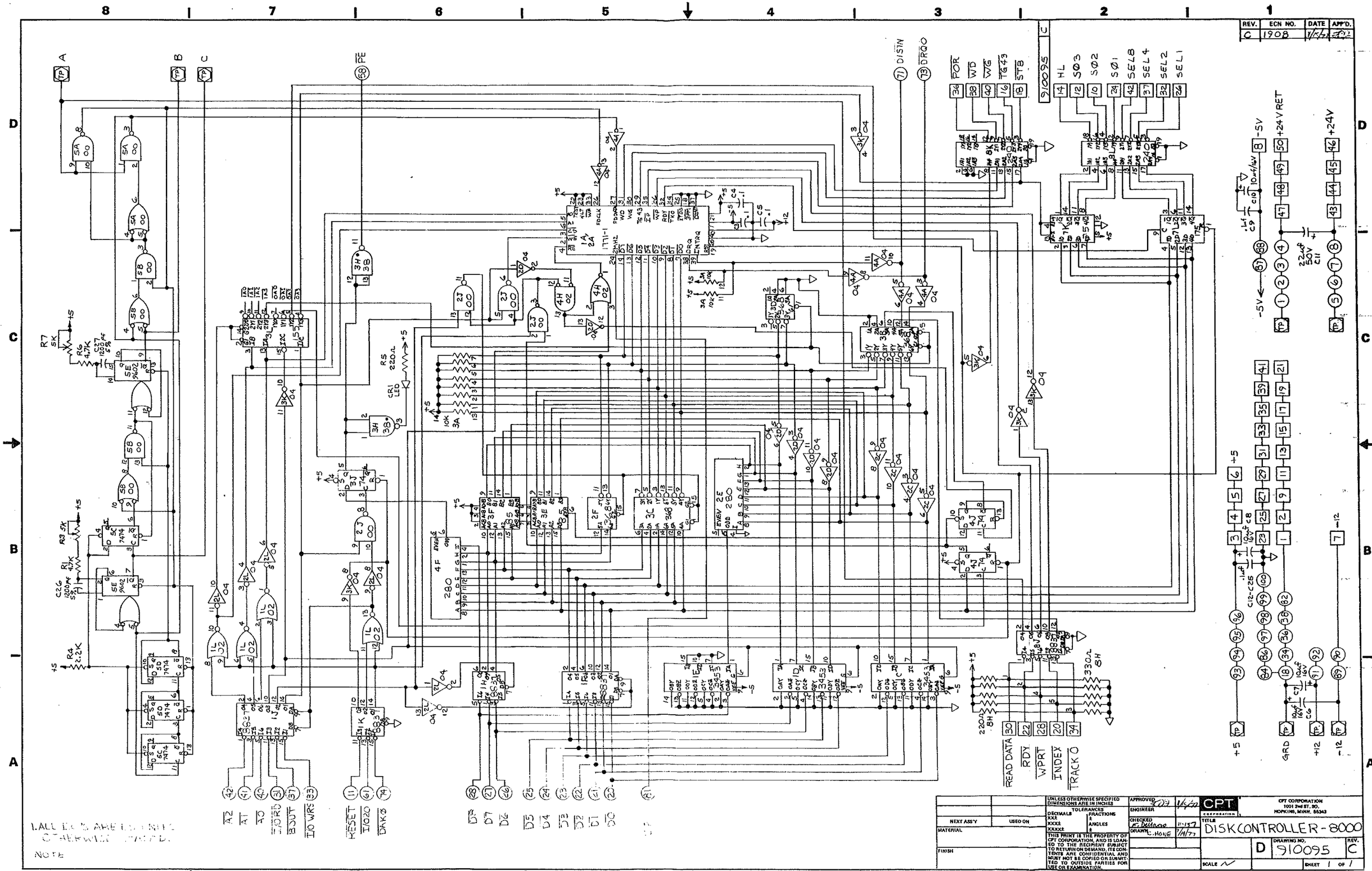
REV. | ECN NO. | DATE | APP'D.
C | 1908
910095
A
B
C
PE
DISIN
DRQO
POR
WD
WG
TG43
STB
HL
SØ3
SØ2
SØ1
SEL8
SEL4
SEL2
SEL1
+24V RET
+24V
-5V
+5
GRD
+12
-12
READ DATA
RDY
WPRT
INDEX
TRACK 0
A2
A1
A0
EJORD
BOUT
IO WRS
RESET
IOCO
DAK0
D3
D7
D6
D5
D4
D3
D2
D1
D0
NOTE
1. ALL R'S ARE 1/4W UNLESS OTHERWISE SPECIFIED
NEXT ASS'Y
USED ON
MATERIAL
FINISH
UNLESS OTHERWISE SPECIFIED DIMENSIONS ARE IN INCHES
TOLERANCES
DECIMALS .XX ±
.XXX ±
.XXXX ±
FRACTIONS ±
ANGLES ±
THIS PRINT IS THE PROPERTY OF CPT CORPORATION, AND IS LOANED TO THE RECIPIENT SUBJECT TO RETURN ON DEMAND. ITS CONTENTS ARE CONFIDENTIAL AND MUST NOT BE COPIED OR SUBMITTED TO OUTSIDE PARTIES FOR USE OR EXAMINATION.
APPROVED
ENGINEER
CHECKED E. DeLuca 11-15-77
DRAWN C. HONE 1/4/77
CPT CORPORATION
CPT CORPORATION
1001 2nd ST. NO.
HOPKINS, MINN. 55343
TITLE
DISKCONTROLLER-8000
D
DRAWING NO. 910095
REV. C
SCALE
SHEET 1 OF 1

REV.	ECN NO.	DATE	APP'D.
A	REL	8/15/77	

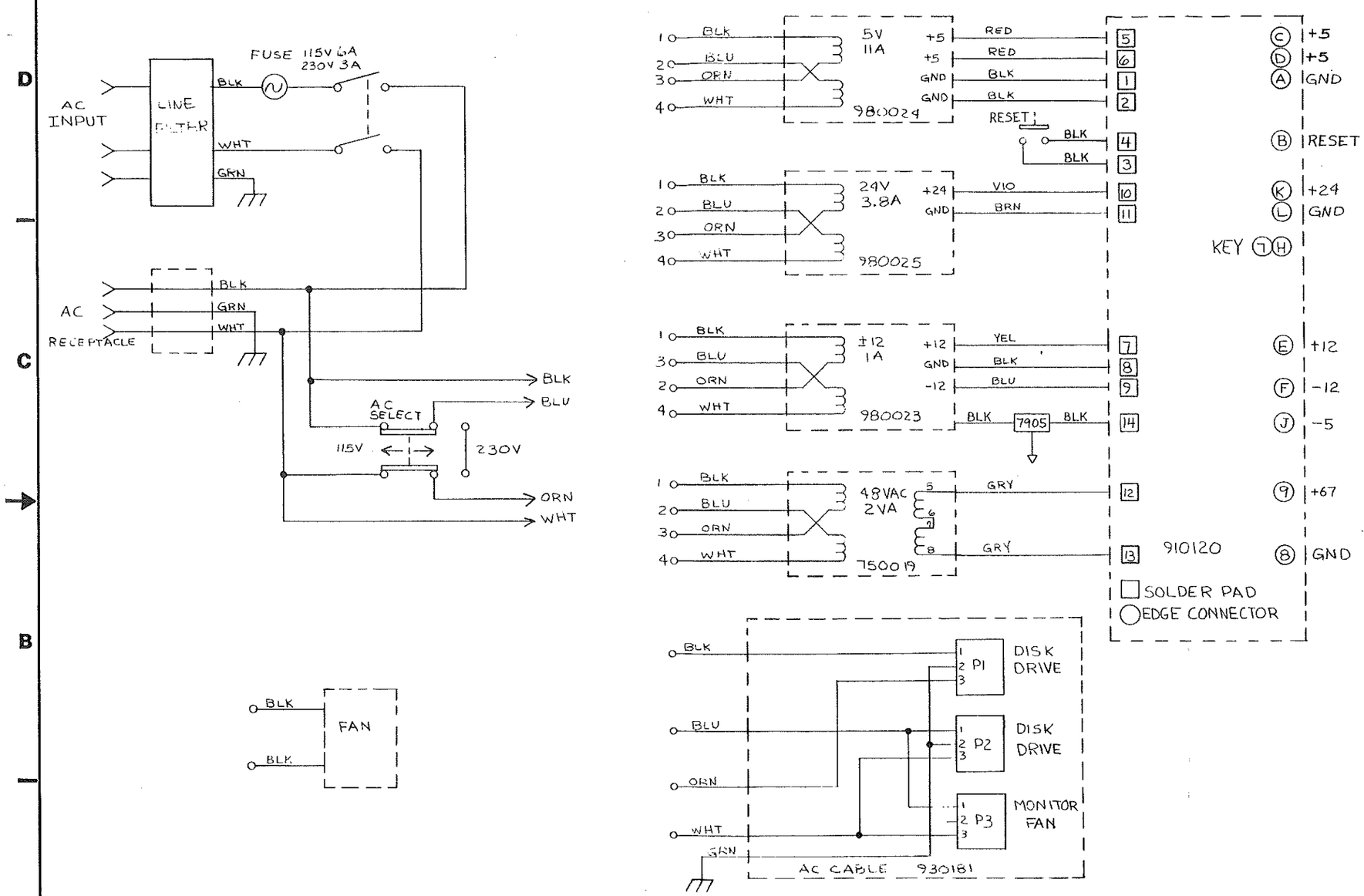

930180 A

NEXT ASS'Y	USED ON	UNLESS OTHERWISE SPECIFIED DIMENSIONS ARE IN INCHES	APPROVED
MATERIAL		TOLERANCES DECIMALS XX± XXX± XXXX± FRACTIONS ± ANGLES ±	ENGINEER E. DeHarco 12-13-7
FINISH		THIS PRINT IS THE PROPERTY OF CPT CORPORATION, AND IS LOANED TO THE RECIPIENT SUBJECT TO RETURN ON DEMAND. ITS CONTENTS ARE CONFIDENTIAL AND MUST NOT BE COPIED OR SUBMITTED TO OUTSIDE PARTIES FOR USE OR EXAMINATION.	CHECKED
			DRAWN 9/15/77

CPT CORPORATION
CPT CORPORATION
1001 2nd ST. SO.
HOPKINS, MINN. 55343

TITLE MAIN P.S. ASS'Y 8000

C | DRAWING NO. 930180 | REV. A

SCALE | SHEET 1 OF 1