N82S184,N82S185 – 8192 Bit Field Programmable Bipolar Prom

GENERAL DESCRIPTION

The 82S184 and 82S185 are field programmable, which means that custom patterns are immediately available by following the fusing procedure given in this data sheet. The standard 82S184 and 82S185 are supplied with all outputs at logical low. Outputs are programmed to a logic high level at any specified address by fusing a Ni-Cr link matrix.

These devices include on-chip decoding and 1 chip enable input for ease of memory expansion. They feature either open collector or tri-state outputs for optimization of word expansion in bused organizations.

Both 82S184 and 82S185 devices are available in the commercial and military temperature ranges. For the commercial temperature range (0°C to +75°C specify N82S184/185, I, and for the military temperature range (–55°C to +125°C) specify S82S184/185, I.

FEATURES

- Low power dissipation: 50μW/bit typ
- Address access time:
  N82S184/185: 100ns max
  S82S184/185: 150ns max
- Input loading:
  N82S184/185: –100μA max
  S82S184/185: –150μA max
- On-chip address decoding
- Output options:
  82S184: Open collector
  82S185: Tri-state
- No separate fusing pins
- Unprogrammed outputs are low level
- Fully TTL compatible

REFERENCE TABLE

TYPE NO.	STOCK NO	OUTLINE DRWG. NO.
N82S184F	56320R	21
N82S185F	56321G	21

CONNECTION DIAGRAM

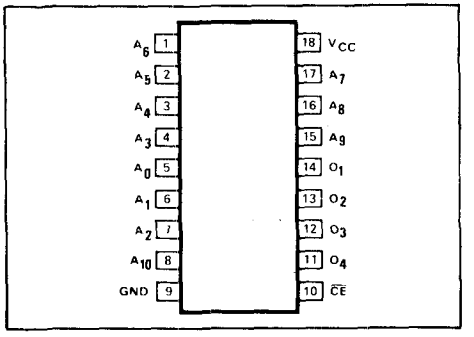

MAXIMUM RATINGS

PARAMETER		RATING	UNIT
V_{CC}	Supply voltage	+7	Vdc
V_{IN}	Input voltage	+5.5	Vdc
	Output voltage		Vdc
V_{OH}	High (82S184)	+5.5	
V_O	Off-state (82S185)	+5.5	
	Temperature range		°C
T_A	Operating		
	N82S184/185	0 to +75	
	S82S184/185	–55 to +125	
T_{STG}	Storage	–65 to +150	

BLOCK DIAGRAM

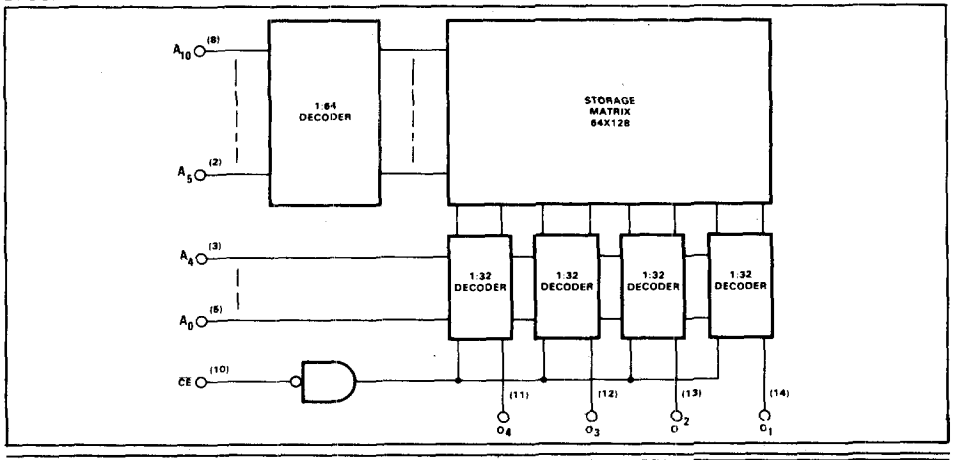

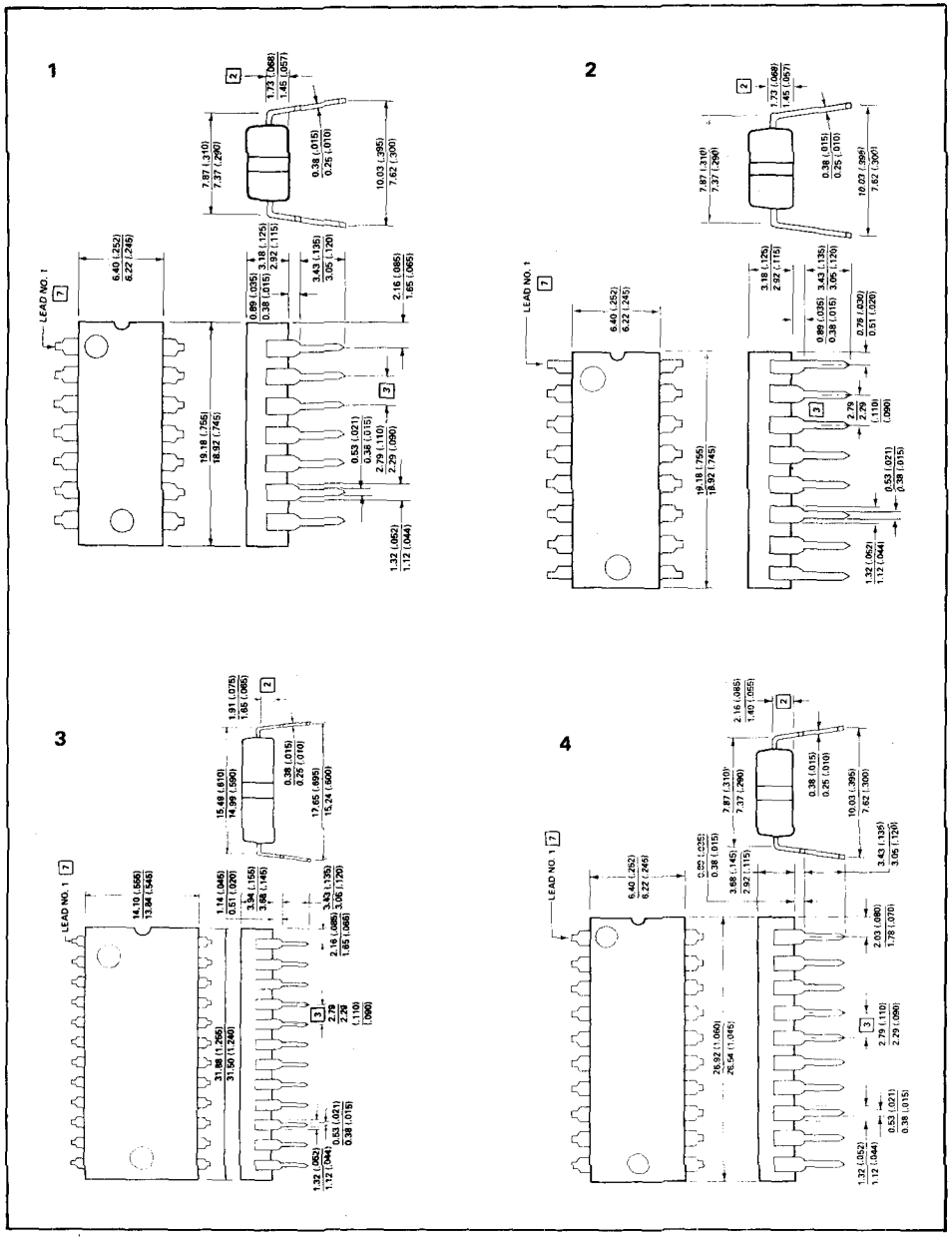

PLEASE QUOTE STOCK NO.
AND MANUFACTURERS PART NO. WHEN ORDERING

ITT GEMINI

5

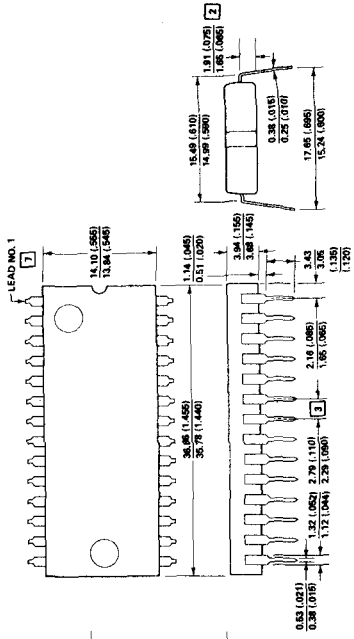
LEAD NO. 1
7
2
3
1.91 (.075)
1.65 (.065)
15.49 (.610)
14.99 (.590)
0.38 (.015)
0.25 (.010)
17.65 (.695)
15.24 (.600)
14.10 (.555)
13.84 (.545)
1.14 (.045)
0.51 (.020)
3.94 (.155)
3.68 (.145)
3.43
3.06
(.135)
(.120)
2.16 (.085)
1.65 (.065)
36.85 (1.450)
35.79 (1.440)
2.79 (.110)
2.29 (.090)
1.32 (.052)
1.12 (.044)
0.53 (.021)
0.38 (.015)

6

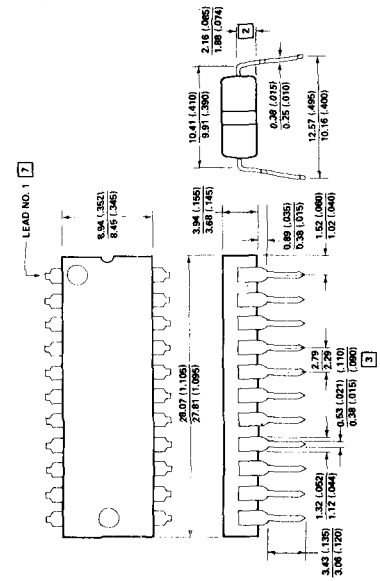
LEAD NO. 1
7
2
3
2.16 (.085)
1.88 (.074)
10.41 (.410)
9.91 (.390)
0.38 (.015)
0.25 (.010)
12.57 (.495)
10.16 (.400)
8.94 (.352)
8.46 (.345)
3.94 (.155)
3.68 (.145)
0.89 (.035)
0.38 (.015)
1.52 (.060)
1.02 (.040)
2.79
2.29
(.110)
(.090)
0.53 (.021)
0.38 (.015)
29.07 (1.145)
27.81 (1.095)
1.32 (.052)
1.12 (.044)
3.43 (.135)
3.06 (.120)

7

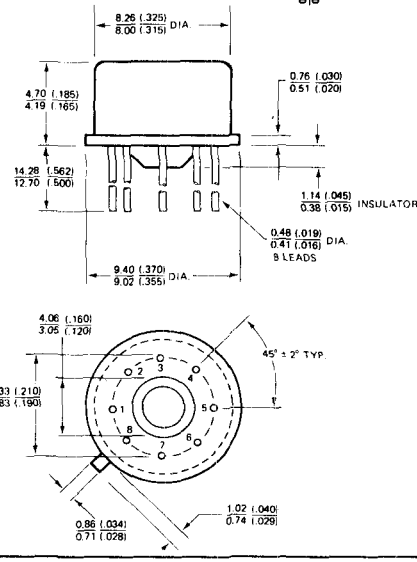
8.26 (.325)
8.00 (.315) DIA.
4.70 (.185)
4.19 (.165)
0.76 (.030)
0.51 (.020)
14.28 (.562)
12.70 (.500)
1.14 (.045)
0.38 (.015) INSULATOR
0.48 (.019)
0.41 (.016) DIA.
8 LEADS
9.40 (.370)
9.02 (.355) DIA.
4.06 (.160)
3.05 (.120)
45° ± 2° TYP.
5.33 (.210)
4.83 (.190)
1
2
3
4
5
6
7
8
0.86 (.034)
0.71 (.028)
1.02 (.040)
0.74 (.029)

8

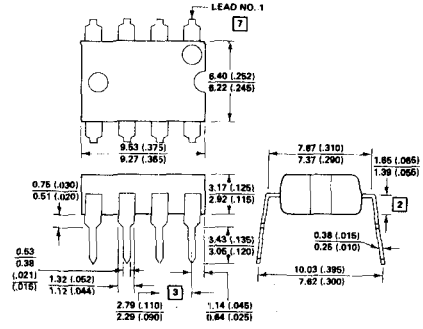
LEAD NO. 1
7
6.40 (.252)
6.22 (.245)
9.53 (.375)
9.27 (.365)
7.87 (.310)
7.37 (.290)
1.85 (.065)
1.39 (.055)
0.75 (.030)
0.51 (.020)
3.17 (.125)
2.92 (.115)
2
0.38 (.015)
0.25 (.010)
0.53
0.38
(.021)
(.015)
3.43 (.135)
3.06 (.120)
1.32 (.052)
1.12 (.044)
10.03 (.395)
7.62 (.300)
3
2.79 (.110)
2.29 (.090)
1.14 (.045)
0.64 (.025)

9

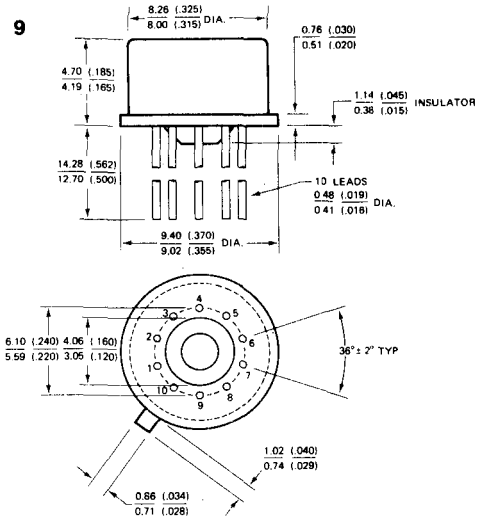

10

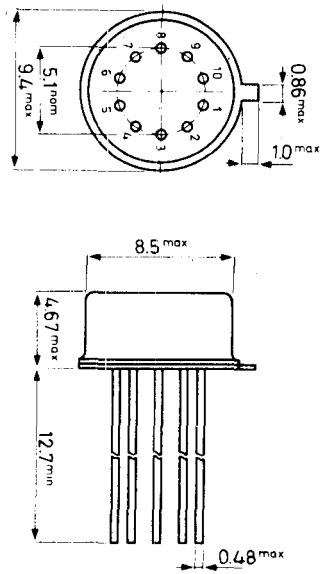

11

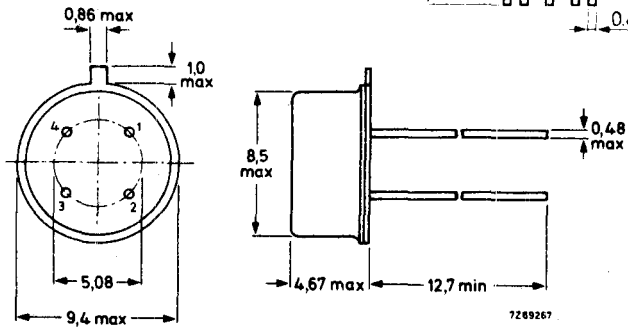

12

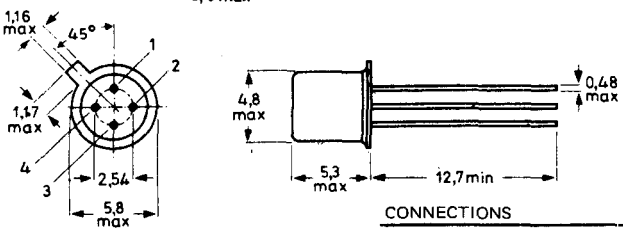

pin 4 connected to case

CONNECTIONS

DRWG NO.	1	2	3	4	
12.1	V_O	V_P	V_i	V_N	
12.2	d	g_2	g_1	S	Substrate connected to envelope
12.3	s	d	g	*	

PLEASE QUOTE STOCK NO.
AND MANUFACTURERS PART NO. WHEN ORDERING

ITT GEMINI

13

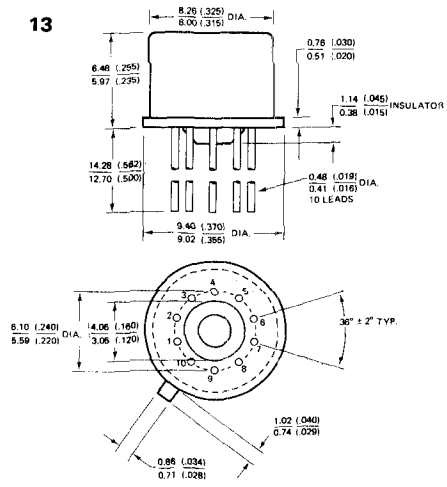
8.26 (.325)
8.00 (.315) DIA.
0.78 (.030)
0.51 (.020)
6.48 (.255)
5.97 (.235)
1.14 (.045)
0.38 (.015) INSULATOR
14.28 (.562)
12.70 (.500)
0.48 (.019)
0.41 (.016) DIA.
10 LEADS
9.40 (.370)
9.02 (.355) DIA.
6.10 (.240)
5.59 (.220) DIA.
4.06 (.160)
3.06 (.120)
36° ± 2° TYP.
1.02 (.040)
0.74 (.029)
0.86 (.034)
0.71 (.028)

15

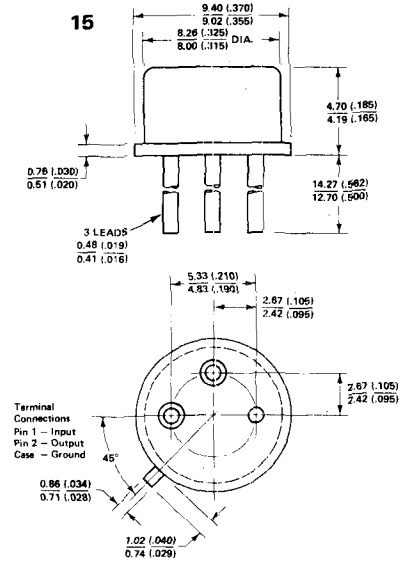
9.40 (.370)
9.02 (.355)
8.26 (.325)
8.00 (.315) DIA.
4.70 (.185)
4.19 (.165)
0.78 (.030)
0.51 (.020)
14.27 (.562)
12.70 (.500)
3 LEADS
0.48 (.019)
0.41 (.016)
5.33 (.210)
4.83 (.190)
2.67 (.105)
2.42 (.095)
2.67 (.105)
2.42 (.095)
Terminal
Connections
Pin 1 – Input
Pin 2 – Output
Case – Ground
45°
0.86 (.034)
0.71 (.028)
1.02 (.040)
0.74 (.029)

14

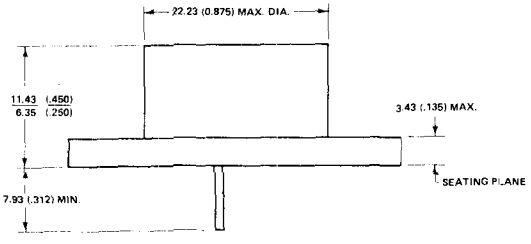
22.23 (0.875) MAX. DIA.
11.43 (.450)
6.35 (.250)
3.43 (.135) MAX.
SEATING PLANE
7.93 (.312) MIN.

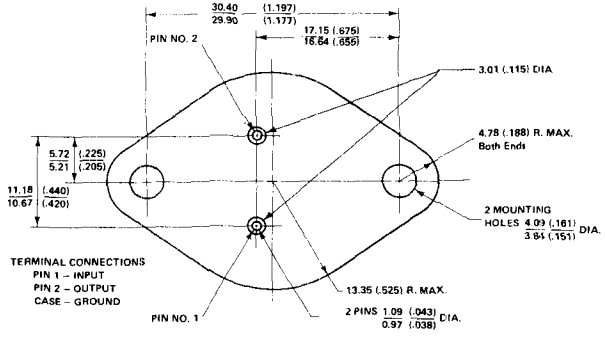
30.40
29.90
(1.197)
(1.177)
17.15 (.675)
16.64 (.655)
PIN NO. 2
3.01 (.115) DIA
4.78 (.188) R. MAX.
Both Ends
5.72
5.21
(.225)
(.205)
11.18
10.67
(.440)
(.420)
2 MOUNTING
HOLES 4.03 (.161)
3.84 (.151) DIA.
TERMINAL CONNECTIONS
PIN 1 – INPUT
PIN 2 – OUTPUT
CASE – GROUND
13.35 (.525) R. MAX.
PIN NO. 1
2 PINS 1.09 (.043)
0.97 (.038) DIA.

16

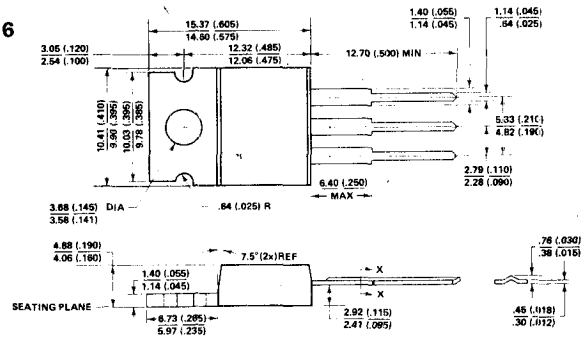
15.37 (.605)
14.80 (.575)
12.32 (.485)
12.06 (.475)
3.05 (.120)
2.54 (.100)
12.70 (.500) MIN
1.40 (.055)
1.14 (.045)
1.14 (.045)
.64 (.025)
10.41 (.410)
9.90 (.395)
10.03 (.395)
9.78 (.385)
5.33 (.210)
4.82 (.190)
2.79 (.110)
2.28 (.090)
6.40 (.250)
MAX
3.68 (.145) DIA
3.56 (.141)
.64 (.025) R
4.88 (.190)
4.06 (.160)
7.5°(2x)REF
1.40 (.055)
1.14 (.045)
SEATING PLANE
6.73 (.265)
5.97 (.235)
2.92 (.115)
2.41 (.095)
.76 (.030)
.38 (.015)
.46 (.018)
.30 (.012)

17

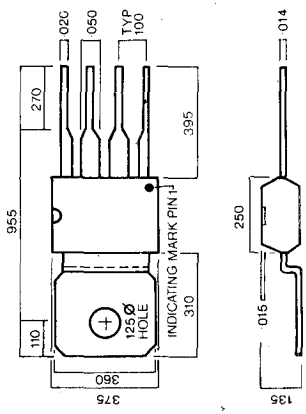
020
050
TYP
100
014
270
395
955
250
INDICATING MARK PIN 1
125 Ø
HOLE
310
110
015
360
375
135

19

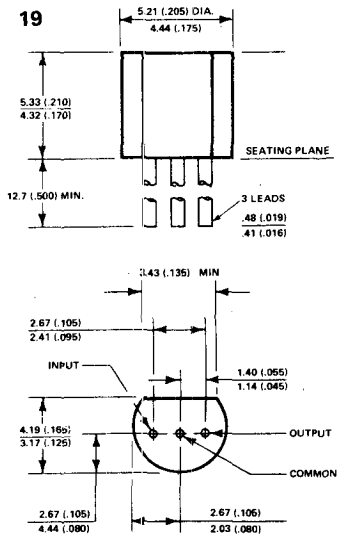
5.21 (.205) DIA.
4.44 (.175)
5.33 (.210)
4.32 (.170)
SEATING PLANE
12.7 (.500) MIN.
3 LEADS
.48 (.019)
.41 (.016)
3.43 (.135) MIN
2.67 (.105)
2.41 (.095)
INPUT
1.40 (.055)
1.14 (.045)
4.19 (.165)
3.17 (.125)
OUTPUT
COMMON
2.67 (.105)
4.44 (.080)
2.67 (.105)
2.03 (.080)

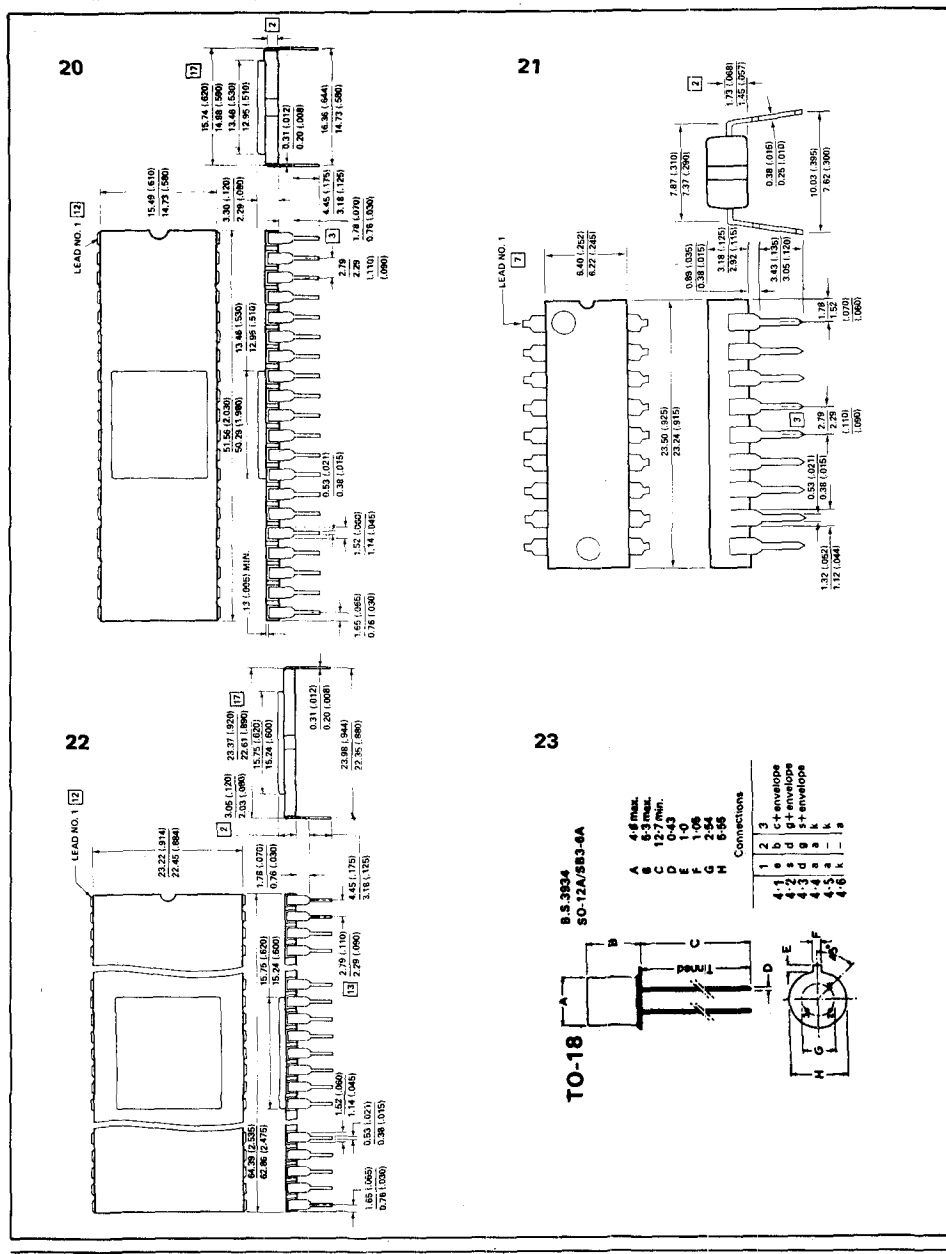
20
21
22
23
LEAD NO. 1
13 (.065) MIN.
TO-18
B.S.3934
SO-12A/SB3-4A
A 4·6 max.
B 6·3 max.
C 12·7 min.
D 0·43
E 1·0
F 1·06
G 2·54
H 5·55
Connections
1 2 3
4·1 e b c+ envelope
4·2 s d g+ envelope
4·3 d g s+ envelope
4·4 a a k
4·5 a – k
4·6 k – a