United States Patent [19]

Straub

[11] **3,753,179**

[45] **Aug. 14, 1973**

[54] **REED SWITCH**

[75] Inventor: **Emil R. C. Straub,** Cozad, Nebr.

[73] Assignee: **Vectronix, Inc.,** Cozad, Nebr.

[22] Filed: **May 18, 1972**

[21] Appl. No.: **254,724**

[52] **U.S. Cl.** **335/207,** 335/206
[51] **Int. Cl.** **H01h 13/14**
[58] **Field of Search** 335/205, 206, 207

[56] **References Cited**

UNITED STATES PATENTS

3,488,613	1/1970	Marchetti	335/207
3,243,544	3/1966	Mayer	335/207 X

Primary Examiner—Roy N. Envall, Jr.
Attorney—David A. Vogel

[57] **ABSTRACT**

A plunger is slidably mounted in a housing so as to move along a predetermined path. A pair of laterally spaced apart magnets is operatively engaged by the plunger so as to be movable parallel to the predetermined path. A pair of magnetically-responsive contacts is disposed between the paths of the magnets, which contacts are switched from one condition to the other in response to movement of the magnets in one direction and is then switched back to the original condition by movement of the magnets in the other direction.

21 Claims, 5 Drawing Figures

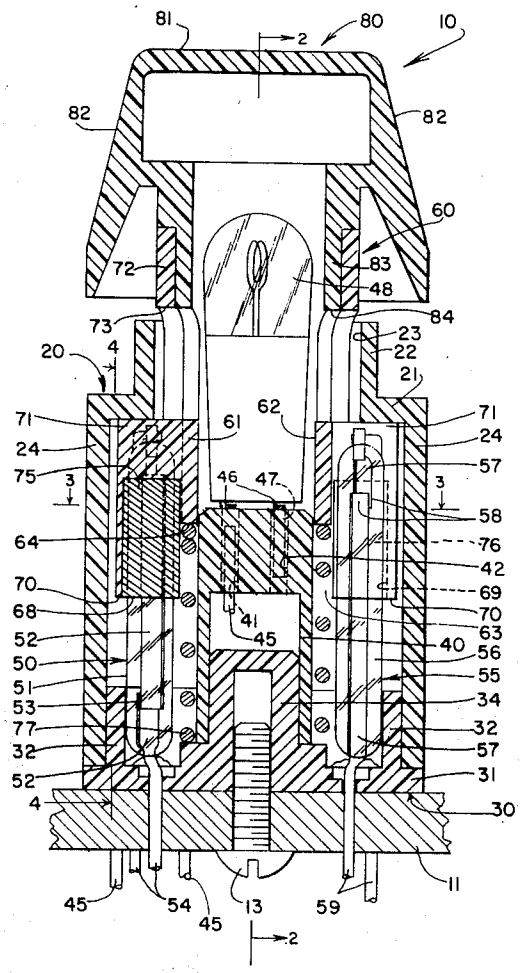

3 Sheets-Sheet 1

FIG. 1

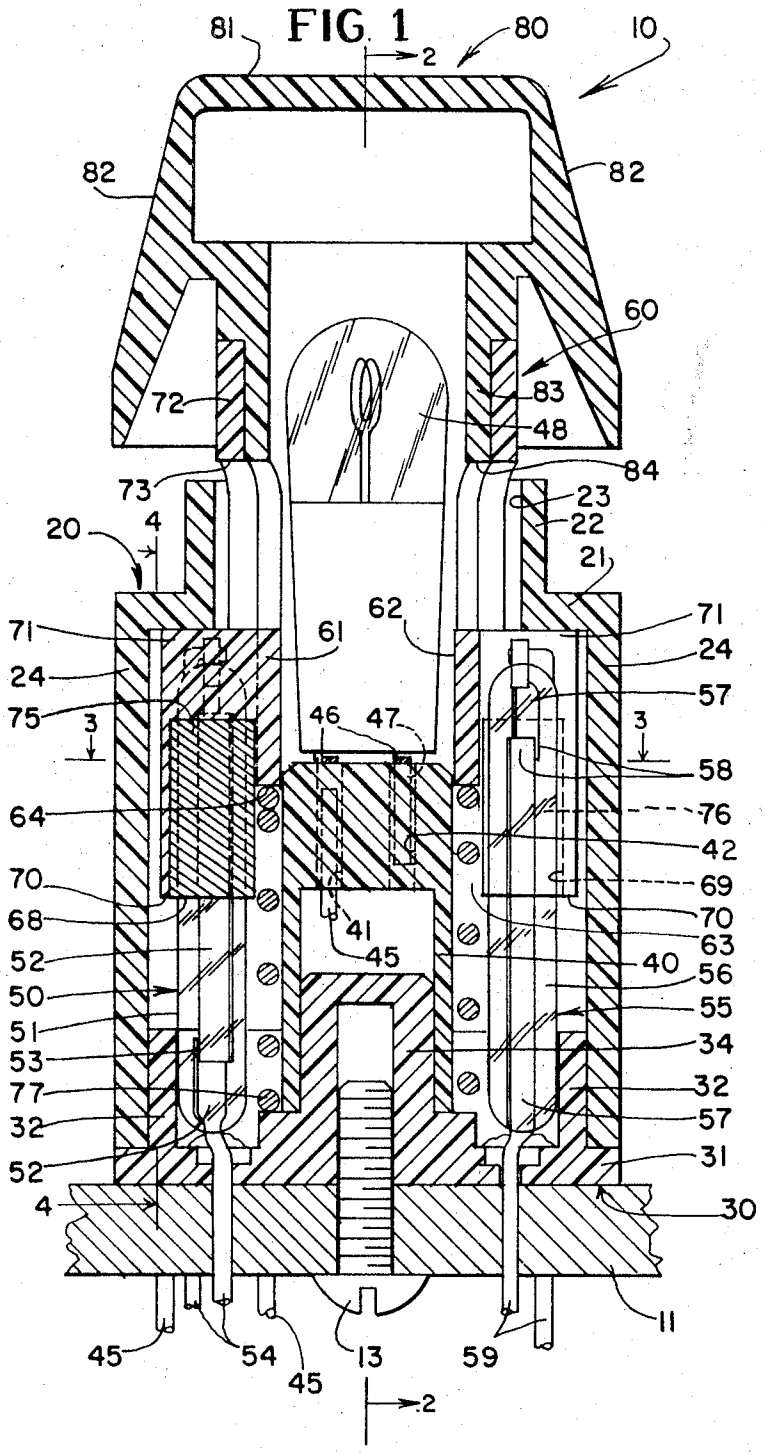

FIG. 2

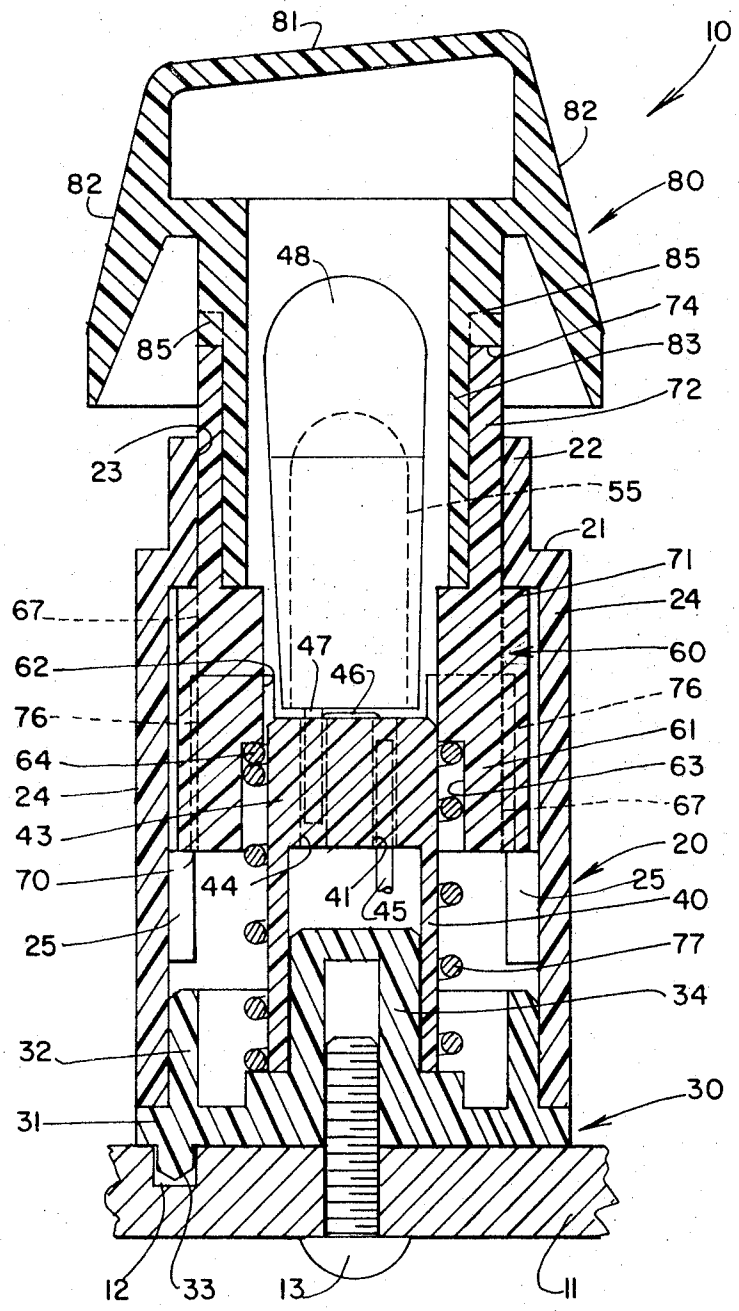
81
10
82
82
80
48
85
74
85
83
72
23
22
55
21
71
67
24
47
60
62
46
76
76
61
64
63
24
67
43
20
70
44
41
45
25
40
25
77
34
32
30
31
12
33
13
11

FIG. 3

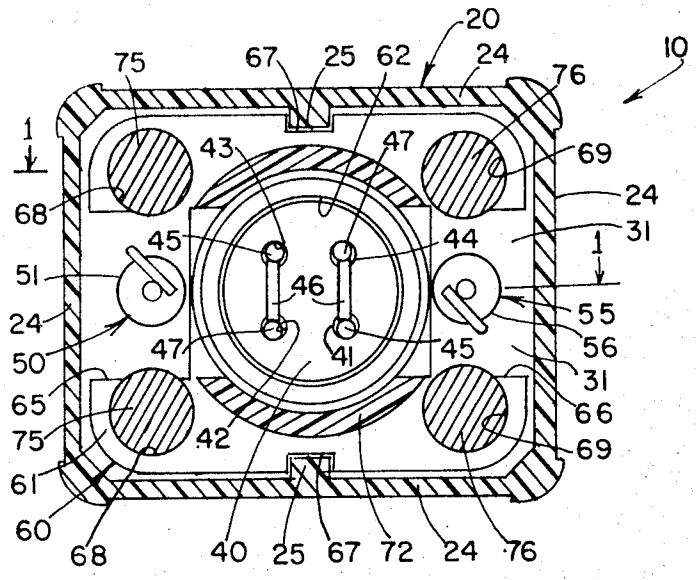

FIG. 4

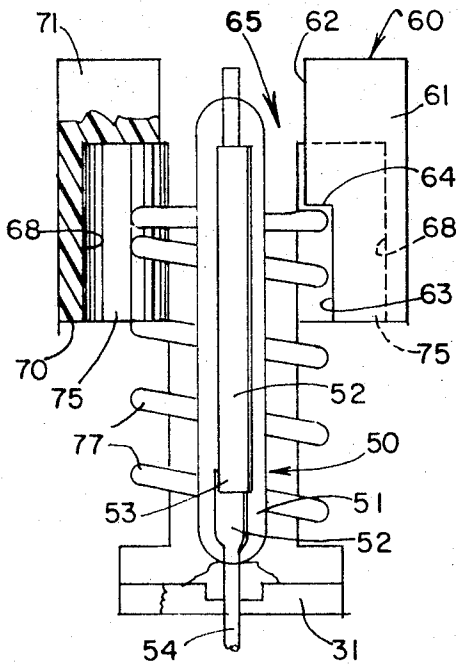

FIG. 5

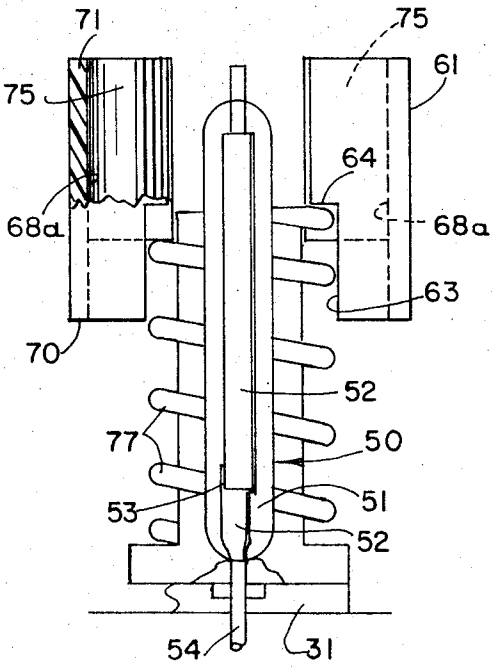

REED SWITCH

This invention is directed to a switch utilizing magnetically-responsive contacts which are actuated by a magnetic field.

An object of this invention is to provide a push-button reed switch which is switched from one condition to another by depressing the button, and which is switched back to the original condition when the button is released, such that the distance between the switching points is reduced.

A further object is to provide a reed switch having two pairs of contacts respectively operated by associated pairs of magnets, wherein the effect of one pair of magnets on the opposite pair of contacts is minimized.

A still further object is to provide a reed switch usable in conjunction with a number of other similar reed switches on a keyboard, wherein the magnets in one switch have a minimum effect on the contacts in other switches.

A yet further object is to provide a reed switch which has space for a lamp therein.

Further objects, advantages, and details of the invention will be apparent as the description proceeds, reference being had to the accompanying drawings wherein preferred forms of the invention are shown. It will be understood, however, that the description and drawings are illustrative only, and that the scope of the invention is to be measured by the appended claims.

FIG. 1 is a view in longitudinal cross section of a reed switch incorporating the features of the present invention;

FIG. 2 is a view in longitudinal cross section taken along the line 2—2 of FIG. 1, without the leads to the reed switching elements being shown;

FIG. 3 is a view in transverse cross section of the reed switch of FIG. 1 taken along the line 3—3 thereof;

FIG. 4 is a view in longitudinal cross section of the reed switch of FIG. 1 taken along the line 4—4 thereof; and

FIG. 5 is a view like FIG. 4, illustrating another embodiment of the present invention.

Referring now to the drawings, there is shown a reed switch **10** incorporating therein the features of the present invention. The reed switch finds particular use on a keyboard such as that employed in a computer input device or in a calculator. The reed switch **10** is of the push-button variety, that is, the switch includes an outwardly-biased button which can be operated to close and/or open an electrical circuit or circuits. The reed switch **10** is shown as being mounted on such a keyboard **11**, the keyboard **11** having a hole **12** to accommodate a projection on the reed switch **10** as will be described. A threaded bolt **13** is provided which passes through an opening in the keyboard **11** for threaded engagement with the reed switch **10** so as to hold same in a selected location.

The reed switch **10** comprises a housing **20** which is rectangular in transverse cross section and, in the form shown, is constructed of plastic. The housing **20** has an abutment or wall **21** adjacent to one end thereof, a neck **22** being provided on the wall **21** and protruding outwardly therefrom. An opening **23** extends through the wall **21** and the neck **22**, with the opposite end of the housing **20** being open. The housing **20** is defined by a set of four side walls **24**. There is provided a pair of laterally aligned and longitudinally extending guides or rails **25** (FIG. 3) on two of the walls **24**, which rails

25 extend generally parallel to each other in the longitudinal direction of the housing **20**. There is also provided a base **30** having a rectangular bottom wall **31** and four side walls **32**, which side walls fit into and frictionally engage respectively the inside of the side walls **24** of the housing **20**. Formed on the bottom wall **31** and protruding outwardly therefrom is a projection **33** which fits into the hole **12** formed in the keyboard **11**, thereby to prevent turning of the reed switch **10** as it is secured to the board **11** by means of the bolt **13**. Protruding inwardly in the same direction as the side walls **32** is a cylindrical lug **34**. After the parts are properly located within the housing **20**, the base **30** is force fitted into the open end of the housing **20**. In addition to the frictional engagement, it is preferable to use cement to insure a long lasting connection.

There is also provided a hollow post **40** which is press fitted onto the lug **34** so as to project upwardly therefrom. In the upper end of the post **40** there are provided four holes **41, 42, 43,** and **44** (FIG. 3 specifically) which are arranged in the form of a square. A pair of leads **45** passes through the post **40** into the holes **41** and **43**, the other ends of the leads **45** passing through the base **30** and protruding therefrom. A U-shaped wire **46** has the legs thereof located respectively in the holes **41** and **44**; and another U-shaped wire **46** has its legs located respectively in the holes **42** and **43**. The holes **42** and **44** therefore define a socket to receive the leads **47** of a lamp **48**. The lamp **48** may be used in a number of ways, such as to indicate that the reed switch **10** should be actuated, or the lamp **48** may be always on, so that the operator can see the switch. Such lamp **48**, however, is not necessary to the instant invention.

Mounted on the base **30** and extending upwardly therefrom is a pair of reed switching elements **50** and **55**. The switching element **50** consists of an elongated glass envelope **51** which is hermetically sealed and contains an inert gas. Encased in the envelope **51** is a pair of beams **52** which are very thin, narrow metal strips that are directed toward one another and extend in a direction substantially parallel to the longitudinal axis of the housing **20**. Respectively at the ends of the beams **52** are contacts **53** which are spaced from each other; that is, the contacts **53** are normally open. The lower beam **52** is shorter than the upper beam **52**, whereby the contacts **53** are located near the lower end of the envelope **51**. The beams **52** respectively penetrate the ends of the envelope **51** and are connected to terminals **54** which pass through the base **30** and protrude outwardly therefrom. When the contacts **53** are oppositely magnetically poled so as to be attracted to each other, they will close. This occurs when they are exposed to a magnetic field with sufficient magnitude to overcome the rigidity of the beams **52**. The beams **52** are constructed to possess the characteristic of a leaf spring, so that, when their mechanical stiffness is overcome by the strength of magnetic attraction, the contacts **53** close.

The other switching element **55** consists of an elongated glass envelope **56** which is hermetically sealed and contains an inert gas. Encased in the envelope **56** is a pair of beams **57** which are in the form of very thin, narrow, metal strips that are directed toward one another and extend in a direction substantially parallel to the longitudinal axis of the housing **20**. Respectively at the ends of the beams **57** are contacts **58** which contact each other; that is, the contacts **58** are normally closed.

The lower beam **57** is longer than the upper beam **57**, whereby the contacts **58** are located near the upper end of the envelope **56**. The beams **57** respectively penetrate the ends of the envelope **56** and are connected to terminals **59** which extend through the base **30** and protrude outwardly therefrom. When the contacts **58** are oppositely magnetically poled so as to be attracted to each other, they will close. This occurs when they are exposed to a magnetic field with sufficient magnitude to overcome the rigidity of the beams **57**. The beams **57** are constructed to possess the characteristic of a leaf spring, so that, when their mechanical stiffness is overcome by the strength of the magnetic attraction, the contacts **58** close.

Actually, the switching elements **50** and **55** may be identical, with one being inverted with respect to the other. The switching elements **50** and **55** are mounted within the housing **20** adjacent opposite ones of the side walls **24**, each being arranged generally centrally with respect to its associated side wall.

The reed switch **10** further comprises a plunger **60** which includes a block-like body **61** having a central bore **62** extending therethrough, which bore **62** has an increased diameter portion **63** at its lower end. The juncture between the increased diameter portion **63** and the rest of the bore **62** defines a laterally-extending abutment surface **64**. Formed respectively in the shorter sides of the body **61** are longitudinally-extending channels **65** and **66**. Formed in the longer sides of the block-like body **61** are longitudinally-extending grooves **67**. Formed in the corners of the body **61** on both sides of the channel **65** is a pair of laterally-spaced-apart, longitudinally-extending bores **68**. Similarly, there is formed in the opposite corners of the body **61** on both sides of the channel **66** a pair of laterally-spaced-apart, longitudinally-extending bores **69**. The body **61** finally has a laterally-extending surface **70** at its lower end.

The upper end of the body **61** defines a shoulder **71** and carries an upwardly-directed sleeve **72** having a diameter slightly less than the diameter of the opening **23** in the neck **22** of the housing **20**. In the base of the sleeve at diametrically-opposed areas thereon are generally-rectangular openings **73**. There is provided a pair of notches **74** at diametrically-opposite areas on the outer end of the sleeve **72**.

The reed switch **10** further comprises two pairs of magnets **75** and **76**, each of which is a solid cylinder and is axially magnetized so as to have north and south poles at opposite ends. The diameter of each magnet **75** is approximately equal to the diameter of the bores **68** and is frictionally engaged therein. Similarly each magnet **76** has a diameter approximately equal to the diameter of the bore **69** and is frictionally held therein. The length of each magnet **75** and **76** is approximately equal to the length of the respective bores **68** and **69**, so that the outer end of each magnet is approximately flush with the surface **70** of the body **61**.

The reed switch **10** also includes a spring **77** which encircles the post **40** and the lamp **48** thereon. One end of the spring **77** rests against the bottom wall **31** of the base **30**, and the other end fits within the increased diameter bore portion **63** of the plunger **60** and rests against the abutment surface **64**. The channel **65** is aligned with the switching element **50**, and the channel **66** is aligned with the switching element **55**. Thus, when the plunger **60** is depressed or moved toward the base **30**, the switching elements **50** and **55** respectively ride in the channels **65** and **66**. The neck **22** of the housing **20** slidably receives the sleeve **72** of the plunger **60**. The spring **77** urges the plunger **60** away from the base **30** so that the shoulders **71** are resiliently urged against the wall **21** of the housing **20**. Thus, the upper limit of the plunger **60** is achieved when the shoulder **71** is against the wall **21**. The lower limit of the plunger **60** results from the surface **70** of the plunger **60** engaging the top surfaces of the side walls **32** on the base **30**.

Lastly, the reed switch comprises a cap **80** which has a top wall **81** with four depending, slightly inclined side walls **82**. On the interior of the top wall **81** is a depending tube **83** having a diameter approximately equal to the inner diameter of the sleeve **72**. A pair of slots **84** is formed in diametrically opposed sides of the tube **83**, and a pair of projections **85** is formed in the tube **83** nearest the top **81**.

In assembling the cap **80**, the tube **83** is inserted in the sleeve **72** which is frictionally engaged thereby. The projections **85** are fitted into the notches **74** on the sleeve **72**. The slots **84** in the tube **83** are respectively aligned with the openings **73**, in the sleeve **72** to permit air flow in the area of the lamp **48** for cooling the same. The cap **80** in the form shown in translucent, so that light emanating from the lamp **48** is visible.

In use, the reed switch is mounted on a keyboard **11**, as previously explained, with the sets of terminals **54** and **59** being electrically connected to their respective circuits. When it is desired to operate such circuits, the user depresses the cap **80** which moves the plunger **60** downwardly, that is, toward the base **30**, which, in turn, carries the magnets **75** and **76** downwardly against the action of the spring **77**.

When the magnets **75** are at their at-rest position, they are sufficiently removed from the contacts **53** that they are open. When the magnets **76** are in their at-rest condition, they are in such close proximity to the contacts **58** that they are closed. Thus the contacts **53** are normally open and the contacts **58** are normally closed. When the cap **80** is depressed, the magnets **75** approach the contacts **58**. When the magnets **75** have traversed a predetermined distance, the magnetic field presented to the contacts **53** will be sufficient to cause them to close. When the plunger **60** is depressed slightly further, the magnets **76** will be sufficiently removed from the contacts **58** to cause them to close, while the contacts **53** are still maintained closed by the magnets **75**. When the cap **80** is released, the magnets **75** and **76** approach their original position, and the contacts **58** first close, followed by opening of the contacts **53**.

An important advantage achieved by the instant invention is that the total mass of the two magnets used to operate a reed-switching element is less than that required of a single magnet, without any deterioration in performance. For example, whereas a magnet previously used was a cylinder having a diameter of one-fourth inch and a height of one-fourth inch, the instant invention requires two cylinders each having a diameter of one-eighth inch and a height of one-fourth inch. The mass of two such ⅛ inch diameter magnets is exactly one-half the mass of a ¼ inch diameter magnet. Although it is not fully understood exactly why two magnets, each having one-fourth the total mass of a single magnet, will perform comparably to the single magnet, it is believed that because the magnets are on op-

posite sides of the contacts they reinforce each other to compensate for the lower mass. While the magnets reinforce each other with respect to the contacts disposed therebetween, neither magnet has any increased effect with respect to the other pair of contacts in each switch.

A further advantage of the construction described relates to the use of the reed switch in a keyboard. Because the total mass of each pair of magnets used to operate the associated reed switching element is substantially less than the mass heretofore required, such pair of magnets has a reduced effect on the contacts in other ones of the reed switches. It may be seen therefore that the improved construction of the reed switch reduces magnetic interaction among the reed switches on a keyboard.

Another advantage resides in the specific construction of the reed switch **10**. By constructing such switch to have the magnets located around the periphery of the plunger, the center of the plunger **60** and the housing **20** are available for other uses. Specifically in this instance, the plunger **60** is cut out centrally thereof, so that a lamp and associated socket may be provided.

One further advantage appears to be an improvement in what may be referred to as the "switching differential." When the reed switch **10** is actuated by depressing the cap **80**, the plunger **60** and the magnets **75** and **76** carried thereby must reach a certain point before the contacts switch from one condition to the other. When the cap **80** is released, and the plunger **60** and the magnets **75** and **76** carried thereby return toward their at-rest position, the contacts will revert to their original position at a different point. The distance between these two points may be referred to as the "switching differential." It has been found that the "switching differential" has been desirably reduced from that which occurred when a single magnet was used to actuate the reed switching element.

Turning now to FIG. **5**, an alternative embodiment of the present invention is illustrated. Specifically, the plunger **60** includes two bores **68***a* each of which corresponds to the bore **68** in the first embodiment (a pair of bores not shown). The bores **68***a* extend through the body **61** of the plunger **60** and are therefore longer than the magnets **75** and **76**, to enable adjustment of the longitudinal position of the magnets **75** and **76**. In such case, the reed switching elements **50** and **55** may be identical and have contacts **53** and **58** disposed in the middle. The magnets **75** and **76** would be moved to a selected location to achieve the operation previously described of closing one pair of contacts before the other pair of contacts is closed.

While there have been described what are at present considered to be the preferred embodiments of the invention, it will be understood that various modifications may be made therein, and it is intended to cover in the appended claims all such modifications as fall within the true spirit and scope of the invention.

What is claimed is:

1. A reed switch comprising a housing, a plunger slidably carried by said housing and longitudinally movable along a predetermined path, a pair of laterally spaced-apart magnets operatively engaged by said plunger to be movable therewith between first and second limits along paths parallel to said predetermined path, a pair of magnetically-responsive contacts in said housing disposed laterally between said magnet paths and substantially parallel thereto and having open and closed conditions, said contacts being switched to one of the conditions thereof in response to movement of said magnets toward said second limit, said contacts thereafter being switched to the other condition thereof in response to movement of said magnets toward said first limit.

2. The reed switch set forth in claim **1**, wherein said housing is generally rectangular in transverse cross section.

3. The reed switch set forth in claim **1**, wherein each of said magnets is permanently magnetized.

4. The reed switch set forth in claim **1**, wherein each of said magnets is a cylinder having a length on the order of one-fourth inch and a diameter on the order of one-eighth inch.

5. The reed switch set forth in claim **1**, wherein both of said magnets are mounted on and carried by said plunger.

6. The reed switch set forth in claim **1**, wherein each of said magnets is a cylinder having an axis parallel to said predetermined path.

7. The reed switch set forth in claim **1**, wherein said contacts are disposed in a hermetically sealed glass envelope.

8. The reed switch set forth in claim **1**, wherein said contacts are midway between said magnet paths.

9. The reed switch set forth in claim **1**, wherein the distance between said first and second limits is on the order of 0.187 inches.

10. A reed switch comprising a housing, a plunger slidably carried by said housing and longitudinally movable along a predetermined path, a pair of laterally spaced-apart magnets mounted on said plunger to be movable therewith between first and second limits along paths parallel to said predetermined path, spring biasing means operatively engaging said plunger and resiliently urging said magnets to said first limit, a pair of magnetically-responsive contacts in said housing disposed laterally between said magnet paths and substantially parallel thereto and having open and closed conditions, said contacts being switched to one of the conditions thereof in response to movement of said magnets against said spring biasing means toward said second limit, said contacts thereafter being switched to the other condition thereof in response to release of said plunger to cause said magnets to return toward said first limit.

11. A reed switch comprising a housing, a plunger slidably carried by said housing and longitudinally movable along a predetermined path, said plunger having a pair of laterally spaced apart and longitudinally-extending bores therein and a channel laterally between said bores, a pair of magnets respectively in said bores of said plunger to be movable between first and second limits along paths parallel to said predetermined path, a pair of magnetically-responsive contacts in said housing and aligned with said channel and substantially parallel to said magnet paths and having open and closed conditions, said contacts being switched to one of the conditions thereof in response to movement of said magnets toward said second limit, said contacts thereafter being switched to the other condition thereof in response to movement of said magnets toward said first limit.

12. The reed switch set forth in claim **11**, wherein the length of each of said bores is greater than the length

of each of said magnets, whereby said magnets may be selectively located in said bores at a desired longitudinal position.

13. A reed switch comprising a housing, a plunger slidably carried by said housing and longitudinally movable along a predetermined path, a first pair of laterally spaced-apart magnets operatively engaged by said plunger to be movable therewith between first and second limits along paths parallel to said predetermined path, a first pair of magnetically-responsive contacts in said housing disposed laterally between said magnet paths and substantially parallel thereto and having open and closed conditions, said first pair of contacts being switched to one of the conditions thereof in response to movement of said first pair of magnets toward said second limit, said first pair of contacts thereafter being switched to the other condition thereof in response to movement of said first pair of magnets toward said first limit, a second pair of laterally-spaced apart magnets operatively engaged by said plunger to be movable therewith between first and second limits along paths parallel to said predetermined path, a second pair of magnetically-responsive contacts in said housing disposed laterally between said magnet paths and substantially parallel thereto and having open and closed conditions, said second pair of contacts being switched to one of the conditions thereof in response to movement of said second pair of magnets toward said second limit, said second pair of contacts thereafter being switched to the other condition thereof in response to movement of said second pair of magnets toward said first limit.

14. The reed switch set forth in claim **13**, wherein said first and second pairs of contacts are longitudinally spaced from each other.

15. The reed switch set forth in claim **13**, wherein one of said pairs of contacts is normally open and the other of said pair of contacts is normally closed.

16. The reed switch set forth in claim **14**, wherein said magnets are in the same longitudinal position relative to one another.

17. The reed switch set forth in claim **13**, wherein each of said magnets is mounted on and carried by said plunger.

18. The reed switch set forth in claim **13**, wherein said magnets are cylinders having longitudinal axes parallel to one another and said predetermined path.

19. A reed switch comprising a housing, a plunger slidably carried by said housing and longitudinally movable along a predetermined path, said plunger having a pair of laterally-spaced-apart and longitudinally-extending bores therein and a channel laterally between said bores, a pair of magnets respectively in said bores to be movable with said plunger between first and second limits along paths parallel to said predetermined path, a pair of magnetically-responsive contacts in said housing and aligned with said channel and substantially parallel thereto and having open and closed conditions, said contacts being switched to one of the conditions thereof in response to movement of said magnets toward said second limit, said contacts thereafter being switched to the other condition thereof in response to movement of said magnets toward said first limit.

20. A reed switch comprising a housing, a plunger slidably carried by said housing and longitudinally movable along a predetermined path, said plunger having first and second pairs of laterally-spaced-apart and longitudinally-extending magnet-receiving bores, said plunger having a longitudinally-extending first channel disposed laterally between said first pair of magnet-receiving bores and a longitudinally-extending second channel laterally between said second pair of magnet-receiving bores, a first pair of magnets respectively in said first pair of magnet-receiving bores to be movable with said plunger between first and second limits along paths parallel to said predetermined path, a first pair of magnetically-responsive contacts in said housing and aligned with said first channel and substantially parallel to the paths of said first pair of magnets and having open and closed conditions, said first pair of contacts being switched to one of the conditions thereof in response to movement of said first pair of magnets toward said second limit, said first pair of contacts thereafter being switched to the other condition thereof in response to movement of said first pair of magnets toward said first limit, a second pair of magnets respectively in said second pair of magnet-receiving bores to be movable with said plunger between said first and second limits along paths parallel to said predetermined path, a second pair of magnetically-responsive contacts in said housing and substantially parallel to the paths of said second pair of magnets and aligned with said second channel and having open and closed conditions, said second pair of contacts being switched to one of the conditions thereof in response to movement of said second pair of magnets toward said second limit, said second pair of contacts thereafter being switched to the other condition thereof in response to movement of said second pair of magnets toward said first limit.

21. A reed switch comprising a housing, a plunger slidably carried by said housing and longitudinally movable along a predetermined path, said plunger having a longitudinally extending central bore and first and second pairs of laterally-spaced-apart and longitudinally-extending magnet-receiving bores, said plunger having a longitudinally-extending first channel disposed laterally between said first pair of magnet-receiving bores and a longitudinally-extending second channel laterally between said second pair of magnet-receiving bores, a first pair of magnets respectively in said first pair of magnet-receiving bores to be movable with said plunger between first and second limits along paths parallel to said predetermined path, a first pair of magnetically-responsive contacts in said housing and aligned with said first channel and substantially parallel to the paths of said first pair of magnets and having open and closed conditions, said first pair of contacts being switched to one of the conditions thereof in response to movement of said first pair of magnets toward said second limit, said first pair of contacts thereafter being switched to the other condition thereof in response to movement of said first pair of magnets toward said first limit, a second pair of magnets respectively in said second pair of magnet-receiving bores to be movable with said plunger between said first and second limits along paths parallel to said predetermined path, a second pair of magnetically-responsive contacts in said housing and aligned with said second channel and substantially parallel to the paths of said second pair of magnets and having open and closed conditions, said second pair of contacts being switched to one of the conditions thereof in response to movement of said second pair of magnets toward said second limit, said second pair of contacts thereafter being switched to the other condition thereof in response to movement of said second pair of magnets toward said first limit, and a socket in said housing for a lamp and aligned with said central bore.

* * * * *