United States Patent [19]

Spence et al.

[11] **3,911,489**

[45] **Oct. 7, 1975**

[54] **SEARCH FEATURE FOR AN AUTOMATED TYPING SYSTEM**

[75] Inventors: **Gary W. Spence**, Loretto; **James L. Wienhold; Larry E. Kveberg**, both of Minneapolis, all of Minn.

[73] Assignee: **CPT Corporation**, Hopkins, Minn.

[22] Filed: **Dec. 26, 1973**

[21] Appl. No.: **427,925**

[52] **U.S. Cl.** **360/72**

[51] **Int. Cl.** **G11b 15/18**

[58] **Field of Search** ..... 235/92 MP; 340/172.5; 360/49, 72, 4; 197/19, 20

[56] **References Cited**

UNITED STATES PATENTS

2,827,623	3/1958	Ainsworth	340/172.5
3,403,225	9/1968	Mislan	340/172.5
3,413,624	11/1968	Murdoch et al.	340/172.5
3,490,004	1/1970	Ross	340/172.5
3,501,747	3/1970	Bungard et al.	340/172.5
3,528,063	9/1970	Kolpek	340/172.5
3,675,207	7/1972	Schlickener	340/172.5

Primary Examiner—Vincent P. Canney
Attorney, Agent, or Firm—Drosey, Marquart, Windhorst, West and Halladay

[57] **ABSTRACT**

A search feature for an automated typing system for use with cassette tapes and other magnetically operated typing systems. This feature permits the operator of the machine to reach any position on a cassette tape where desired information is located and identified by a reference code. The reference code is entered into the system by holding a designated key on the typing system down such as the margin release key, while entering a single or multiple decimal digit numeric reference code. Then by depressing a SEARCH switch on the console, with RECORD on, the code is recorded onto the tape as a plurality of pulses which can be read and decoded in either direction of tape movement and at any speed. Thereafter, when the operator wishes to move to a particular location on the tape, the desired two digit numeric reference code is entered by depressing the designated switch, such as the margin release button on the typewriter keyboard, along with the applicable two digit reference code and then depressing SEARCH. RECORD is off for this sequence. The two digit reference code is displayed on the console by two light emitting diode readouts. Electronic circuitry implementing the search feature integrates operation with additional features of system as well as providing means for moving forward or backward on the tape without reference to address coding.

14 Claims, 16 Drawing Figures

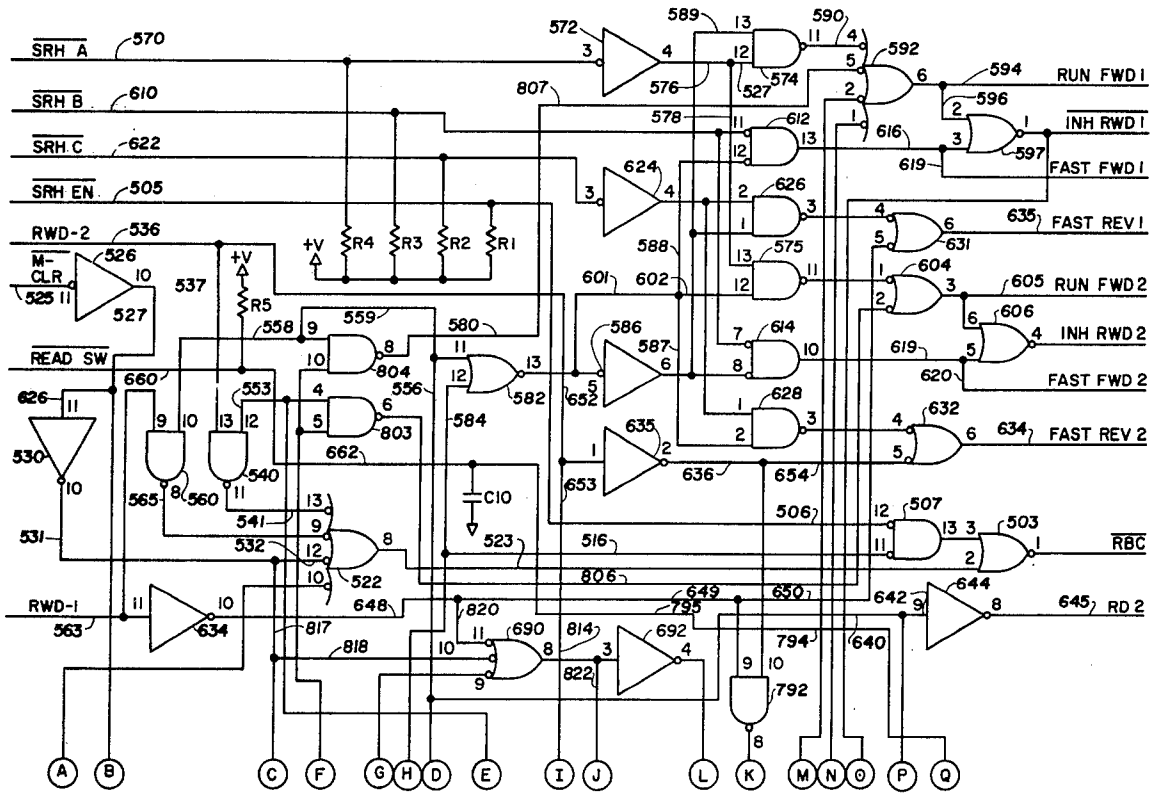

Fig. 1

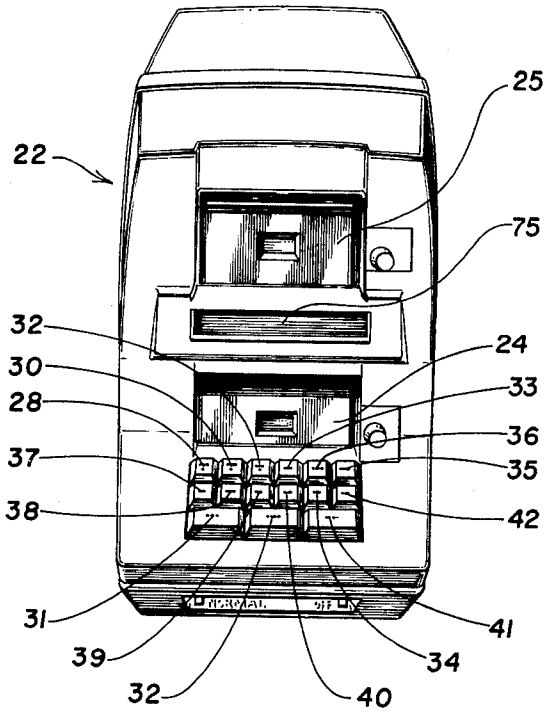

Fig. 2

Fig. 2a
Fig. 2b
Fig. 2c
Fig. 2d

Fig. 3

Fig. 3a	Fig. 3d	Fig. 3g
Fig. 3b	Fig. 3e	Fig. 3h
Fig. 3c	Fig. 3f	Fig. 3i

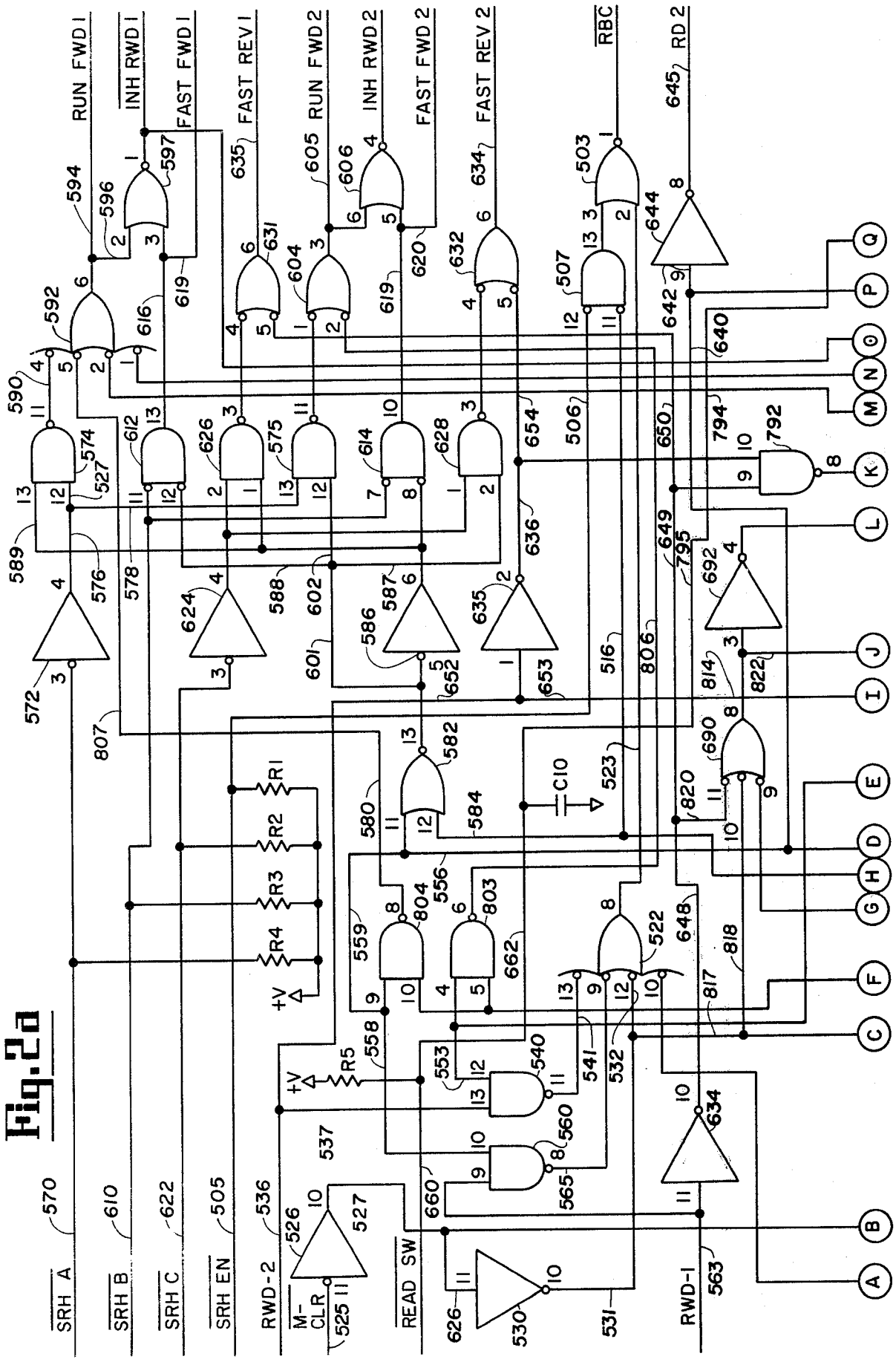
RUN FWD I
INH RWD I
FAST FWD I
FAST REV I
RUN FWD 2
INH RWD 2
FAST FWD 2
FAST REV 2
RBC
RD 2
SRH A
SRH B
SRH C
SRH EN
RWD-2
M-CLR
READ SW
RWD-I
+V
R1
R2
R3
R4
R5
C10

Fig. 2a

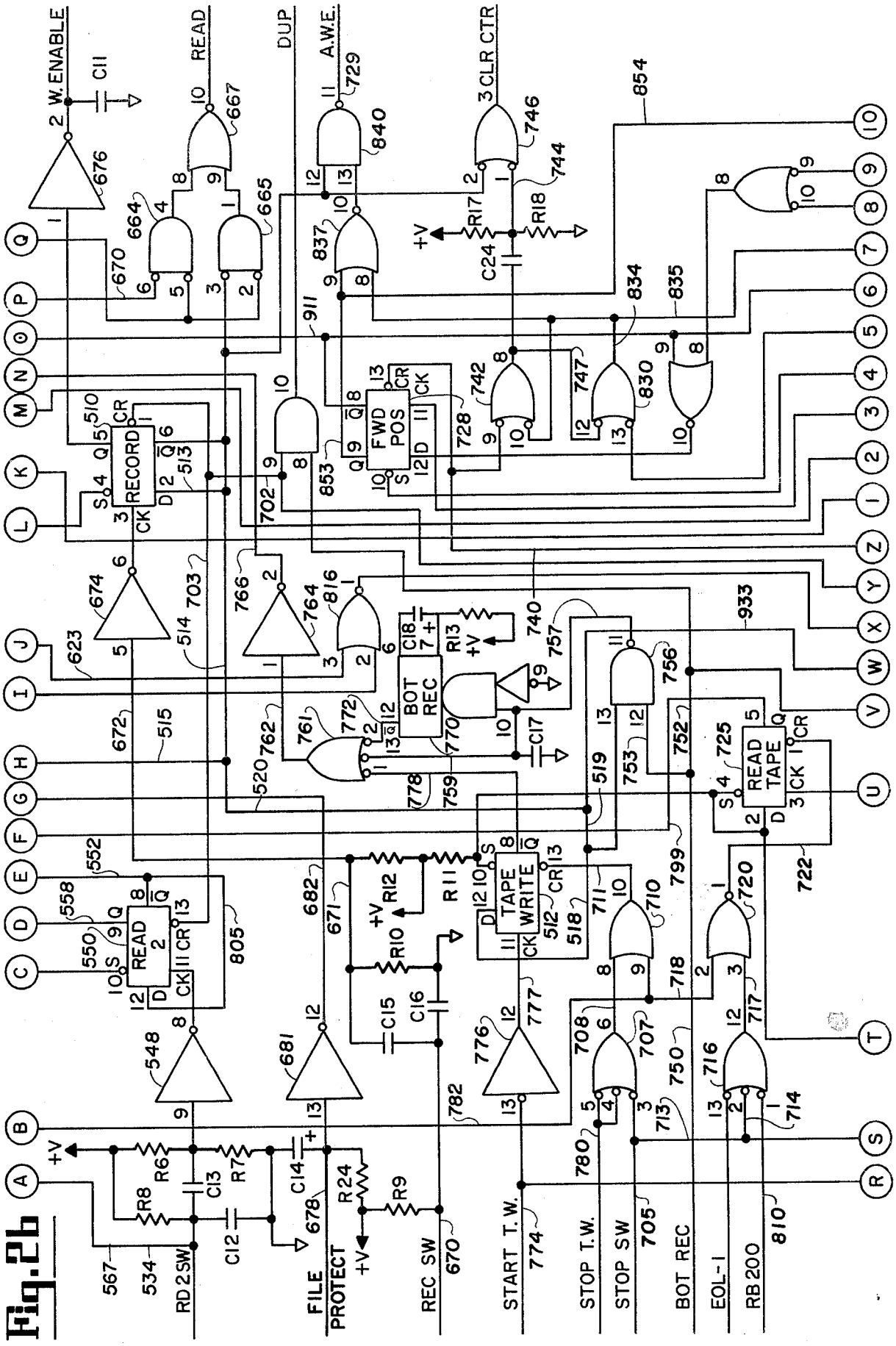
2 W.ENABLE
READ
DUP
A.W.E.
3 CLR CTR
RECORD
FWD POS
BOT REC
TAPE WRITE
READ 2
READ TAPE
RD 2 SW
FILE PROTECT
REC SW
START T.W.
STOP T.W.
STOP SW
BOT REC
EOL-1
RB 200

Fig. 2b

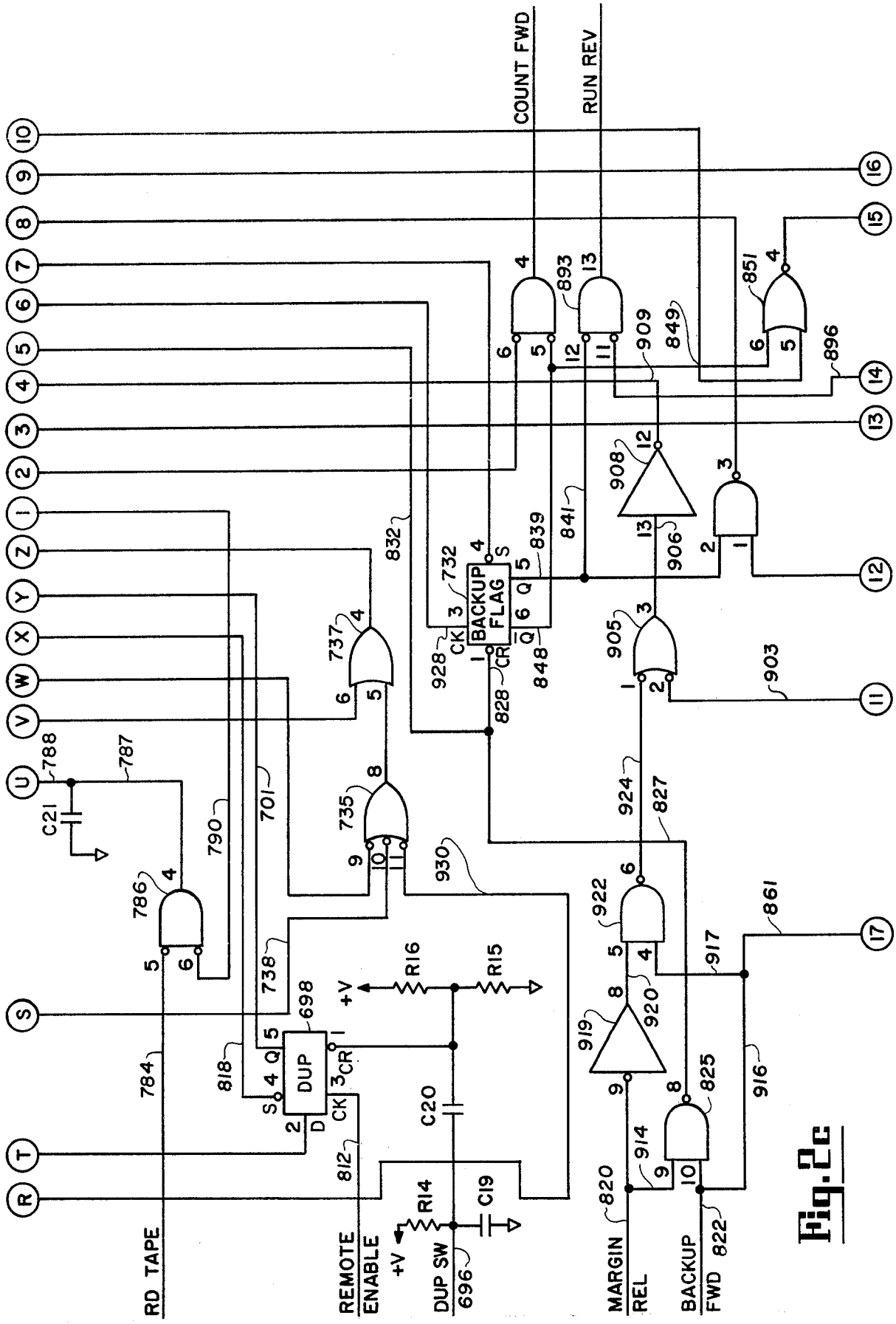
COUNT FWD
RUN REV
BACKUP FLAG
DUP
RD TAPE
REMOTE ENABLE
DUP SW
MARGIN REL
BACKUP FWD
+V
R14
R15
R16
C19
C20
C21

Fig. 2c

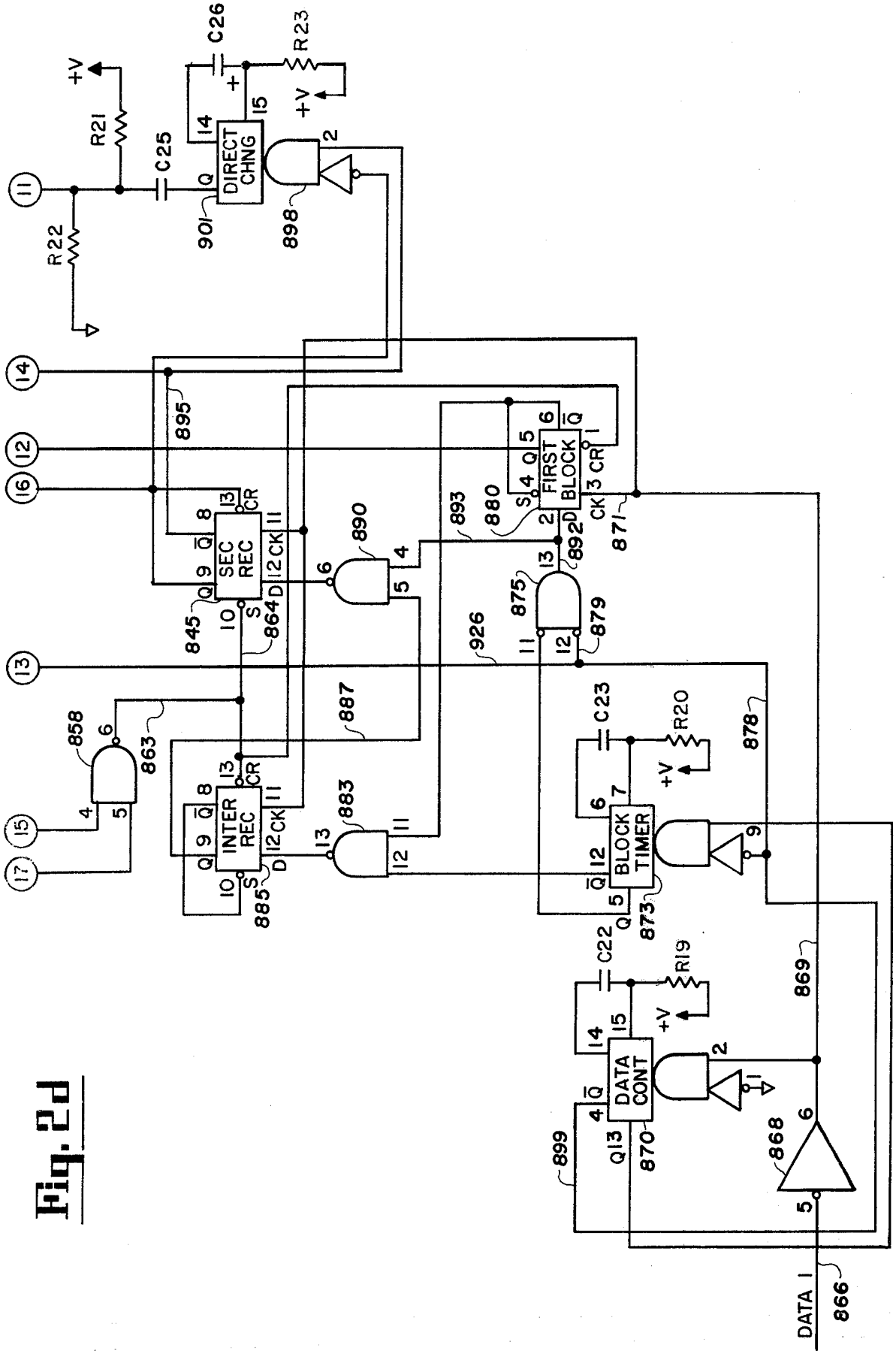
DIRECT CHNG
SEC REC
INTER REC
FIRST BLOCK
BLOCK TIMER
DATA CONT
DATA I
+V
R21
R22
R23
R20
R19
C25
C26
C23
C22
901
898
895
845
864
890
893
880
892
875
879
926
887
863
858
883
885
878
873
869
899
870
868
866
871

Fig. 2d

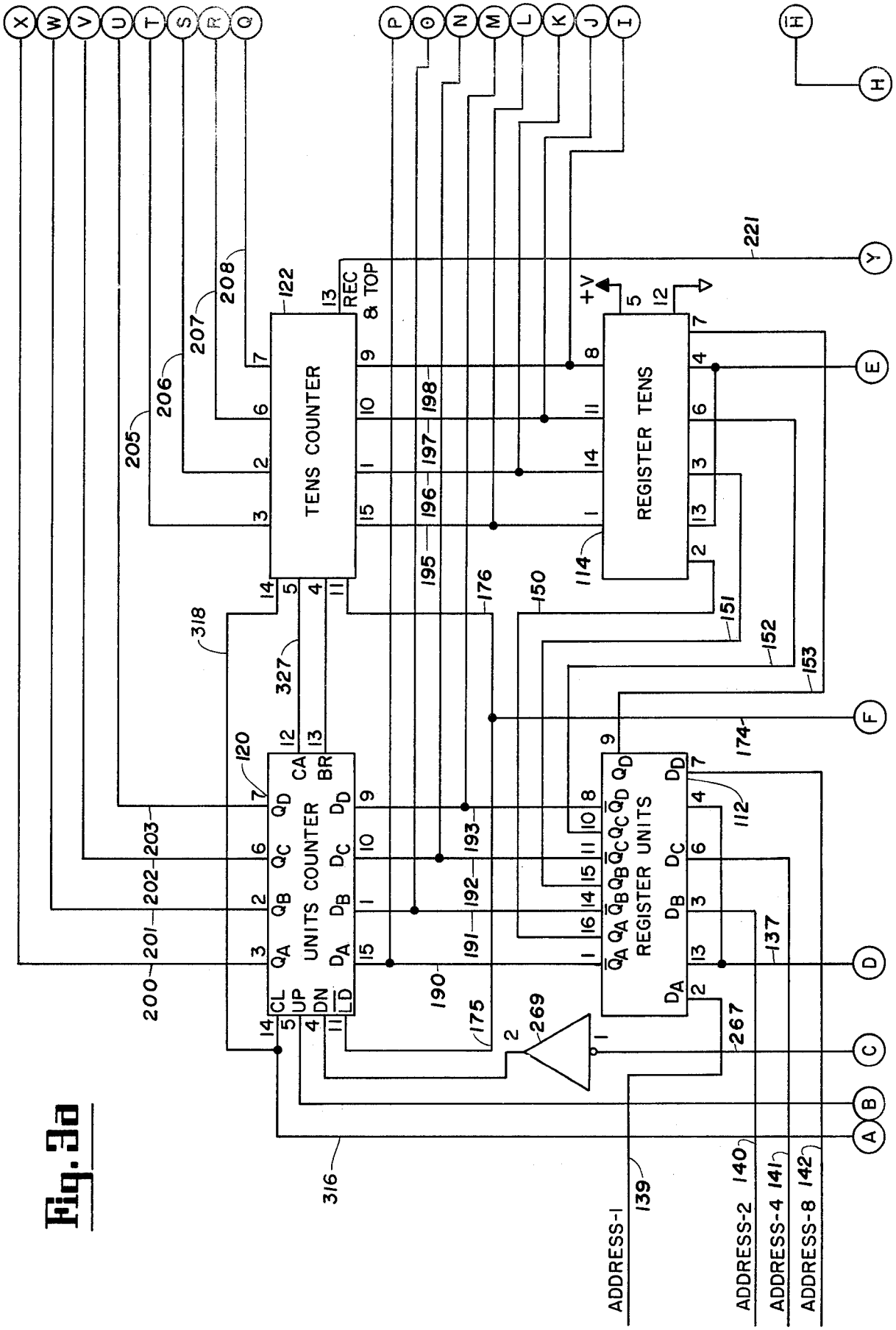
TENS COUNTER
REGISTER TENS
UNITS COUNTER
REGISTER UNITS
REC & TOP
+V
ADDRESS-1
ADDRESS-2
ADDRESS-4
ADDRESS-8

Fig. 3a

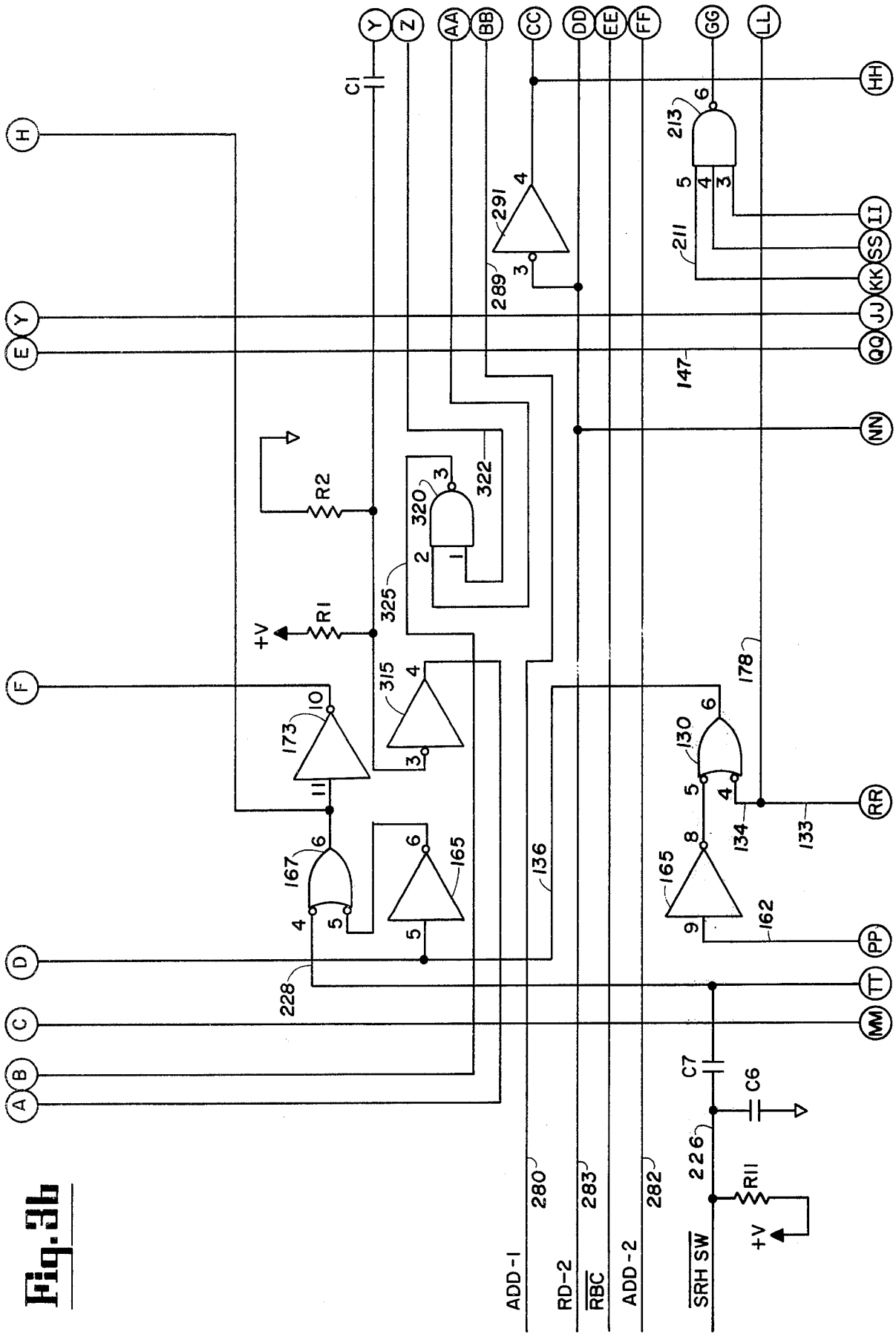
Y
Z
AA
BB
CC
DD
EE
FF
GG
LL
HH
II
SS
KK
JJ
QQ
NN
RR
PP
TT
MM
H
Y
E
F
D
C
B
A
C1
R2
R1
+V
291
289
213
211
147
322
320
325
315
173
167
165
136
228
178
130
134
133
162
280
283
282
226
C7
C6
R11
ADD-1
RD-2
RBC
ADD-2
SRH SW

Fig. 3b

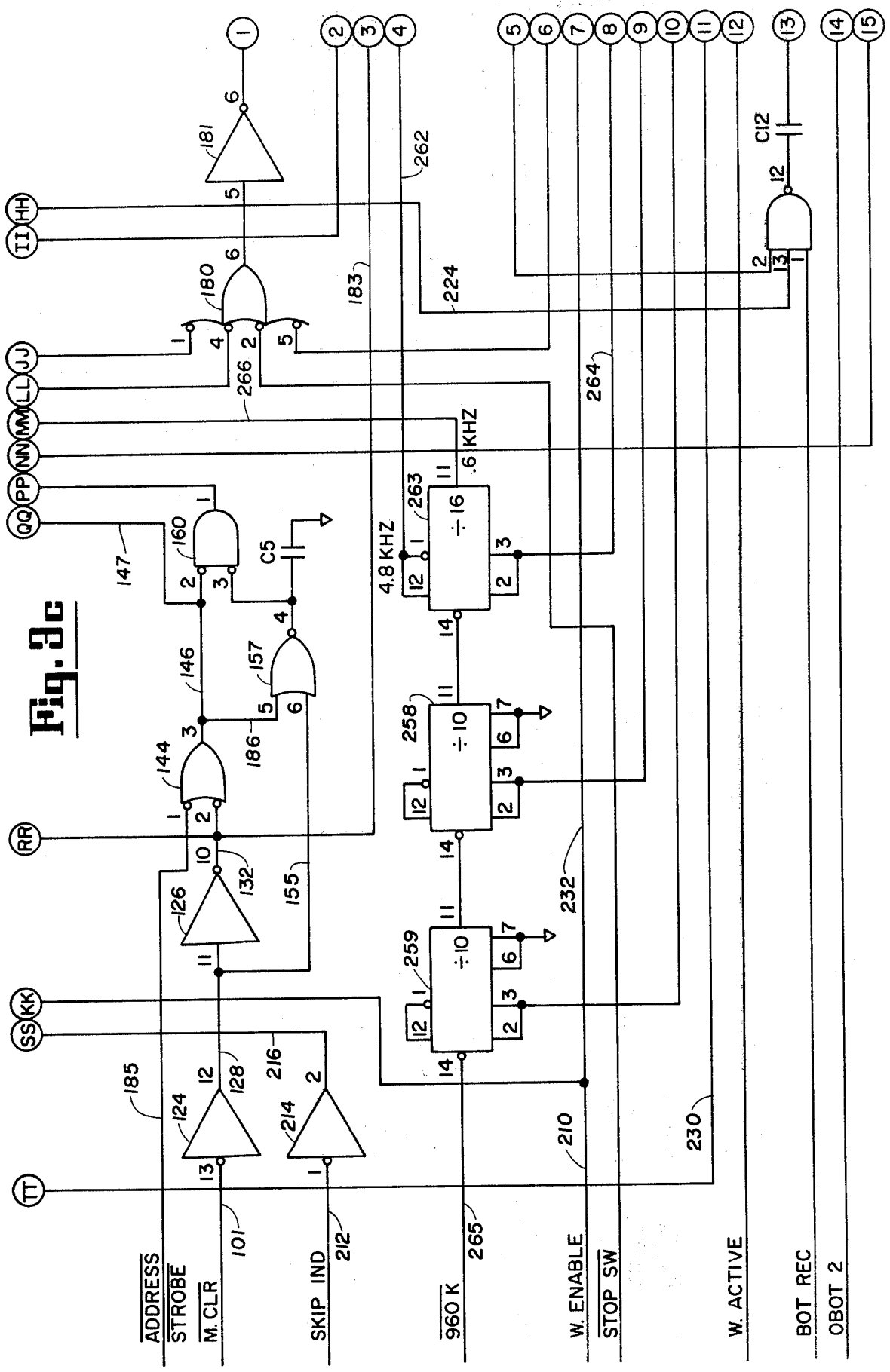
ADDRESS
STROBE
M.CLR
SKIP IND
960 K
W. ENABLE
STOP SW
W. ACTIVE
BOT REC
OBOT 2
4.8 KHZ
.6 KHZ
÷16
÷10
÷10
C5
C12

Fig. 9c

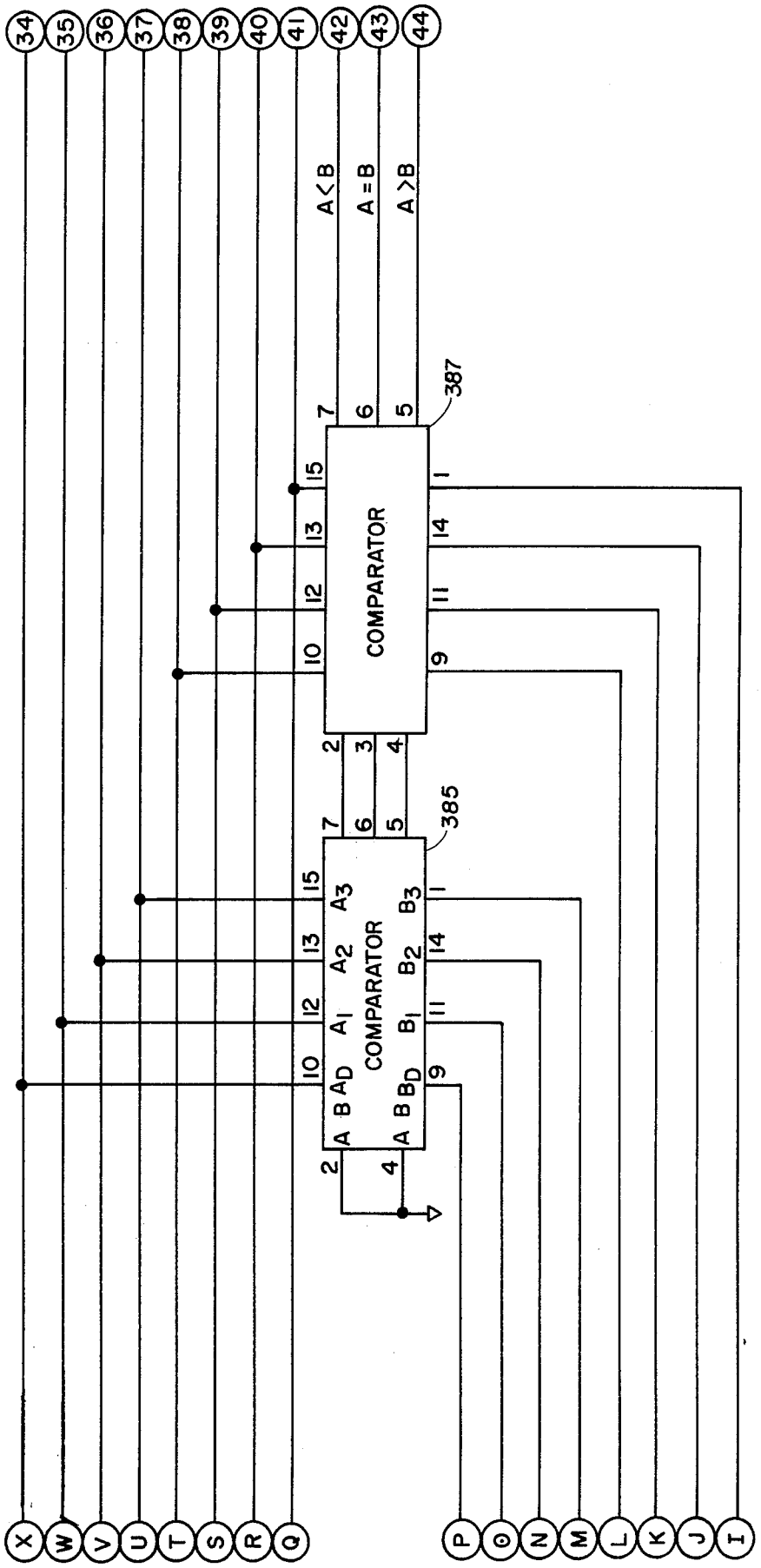
34
35
36
37
38
39
40
41
42
43
44
A<B
A=B
A>B
387
COMPARATOR
385
COMPARATOR
A3
A2
A1
AD
B3
B2
B1
BD
X
W
V
U
T
S
R
Q
P
O
N
M
L
K
J
I

Fig. 3d

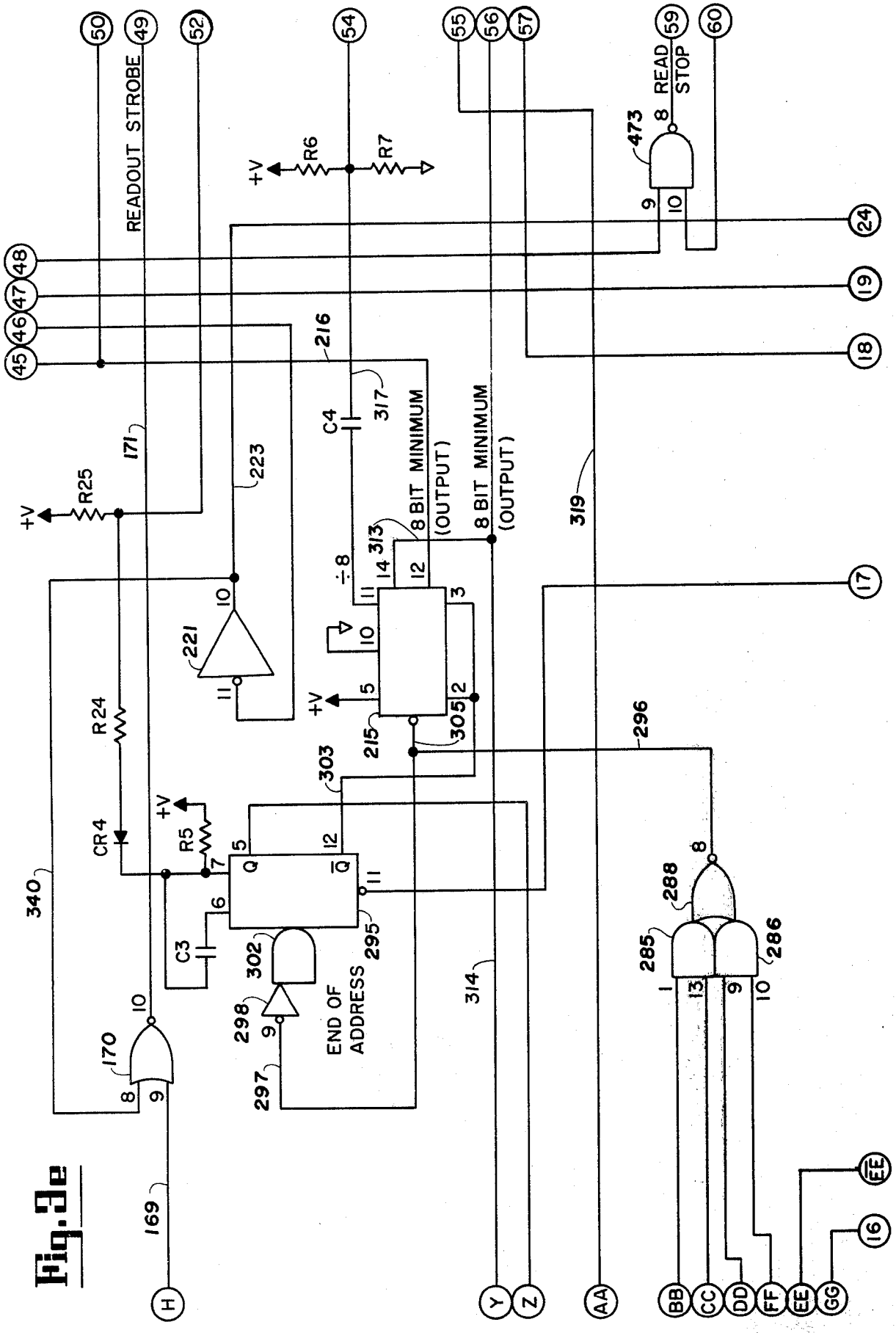
READOUT STROBE
READ
STOP
8 BIT MINIMUM
(OUTPUT)
8 BIT MINIMUM
(OUTPUT)
END OF
ADDRESS
÷8
+V
R6
R7
R25
R24
R5
C3
C4
CR4
Q
Q̄
50
49
52
54
55
56
57
59
60
48
47
46
45
24
19
18
17
16
EE
H
Y
Z
AA
BB
CC
DD
FF
EE
GG
473
216
317
171
223
221
313
215
305
303
296
319
340
295
302
298
297
314
288
285
286
170
169

Fig. 3e

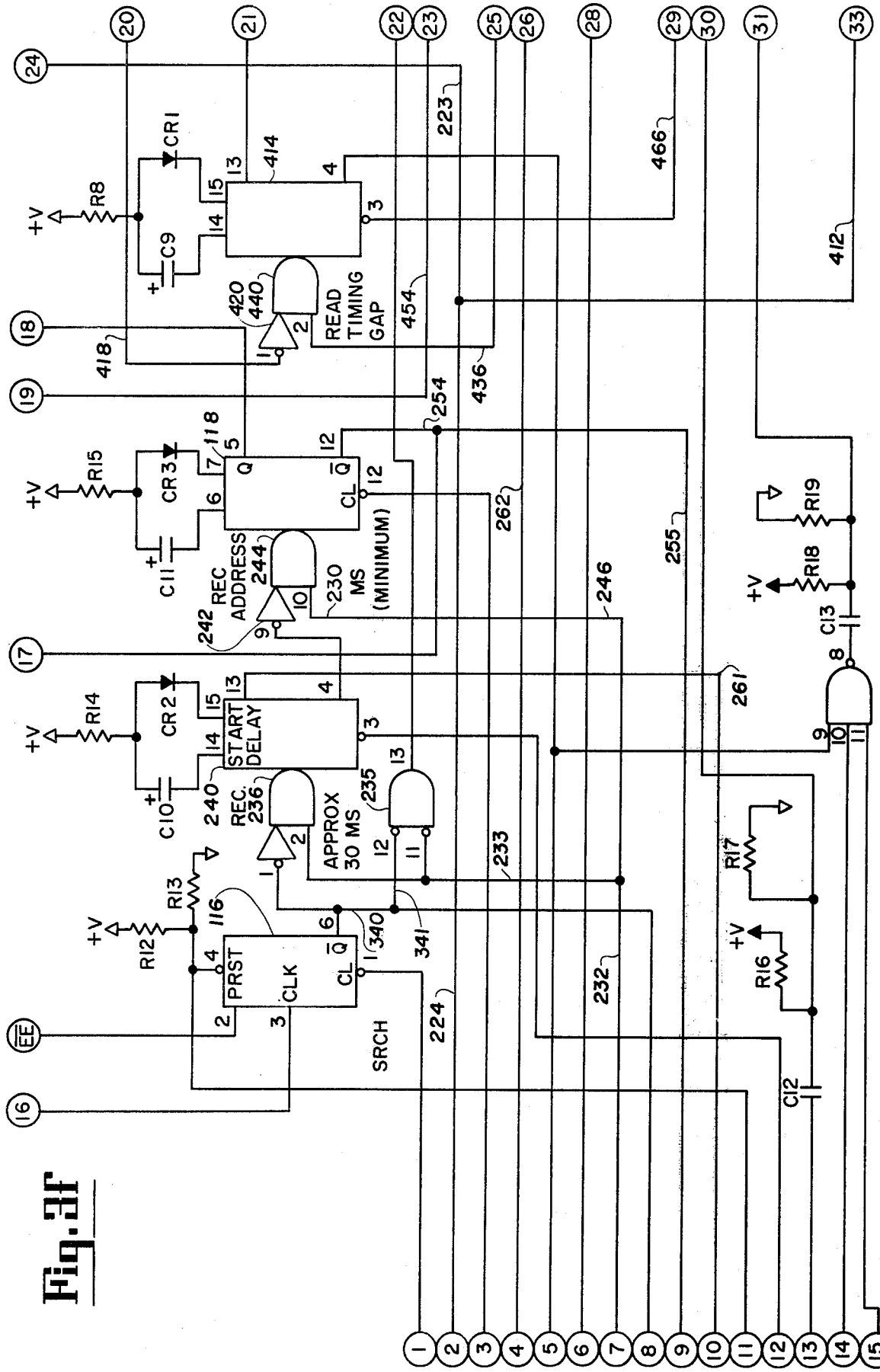
+V
R8
CR1
C9
414
420
440
READ
TIMING
GAP
418
223
466
412
454
436
254
R15
CR3
C11
118
REC
ADDRESS
244
230
MS
(MINIMUM)
242
262
255
246
R19
R18
C13
261
R14
CR2
C10
START
DELAY
240
REC.
236
APPROX
30 MS
235
233
R13
R12
116
PRST
CLK
CL
340
341
SRCH
224
232
R17
R16
C12
EE

Fig. 3F

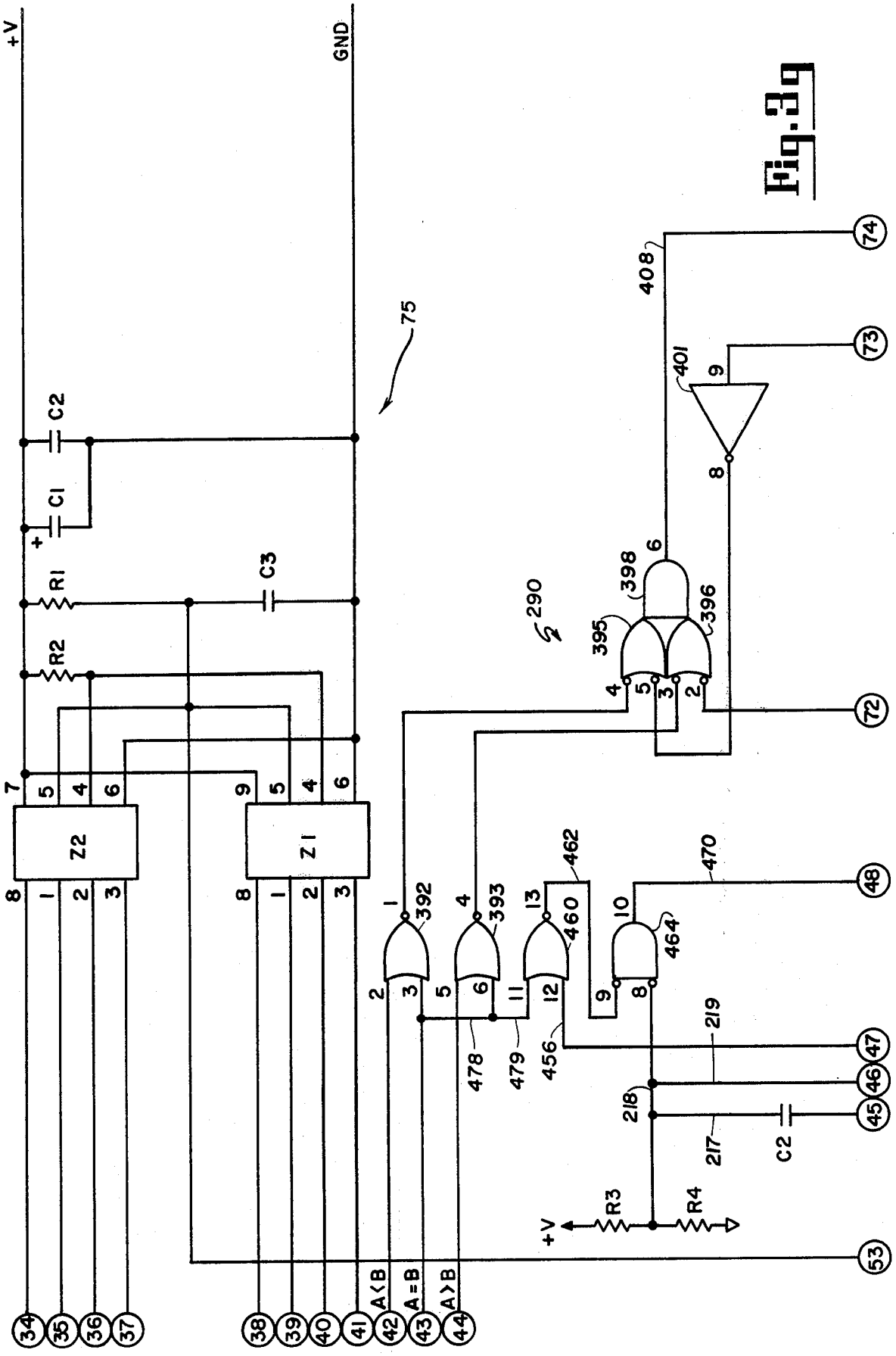
+V
GND
75
C2
C1
R1
C3
R2
Z2
Z1
290
398
396
395
408
401
392
393
460
462
464
470
478
479
456
219
218
217
C2
R3
R4
A<B
A=B
A>B
34
35
36
37
38
39
40
41
42
43
44
45
46
47
48
53
72
73
74

Fig. 3g

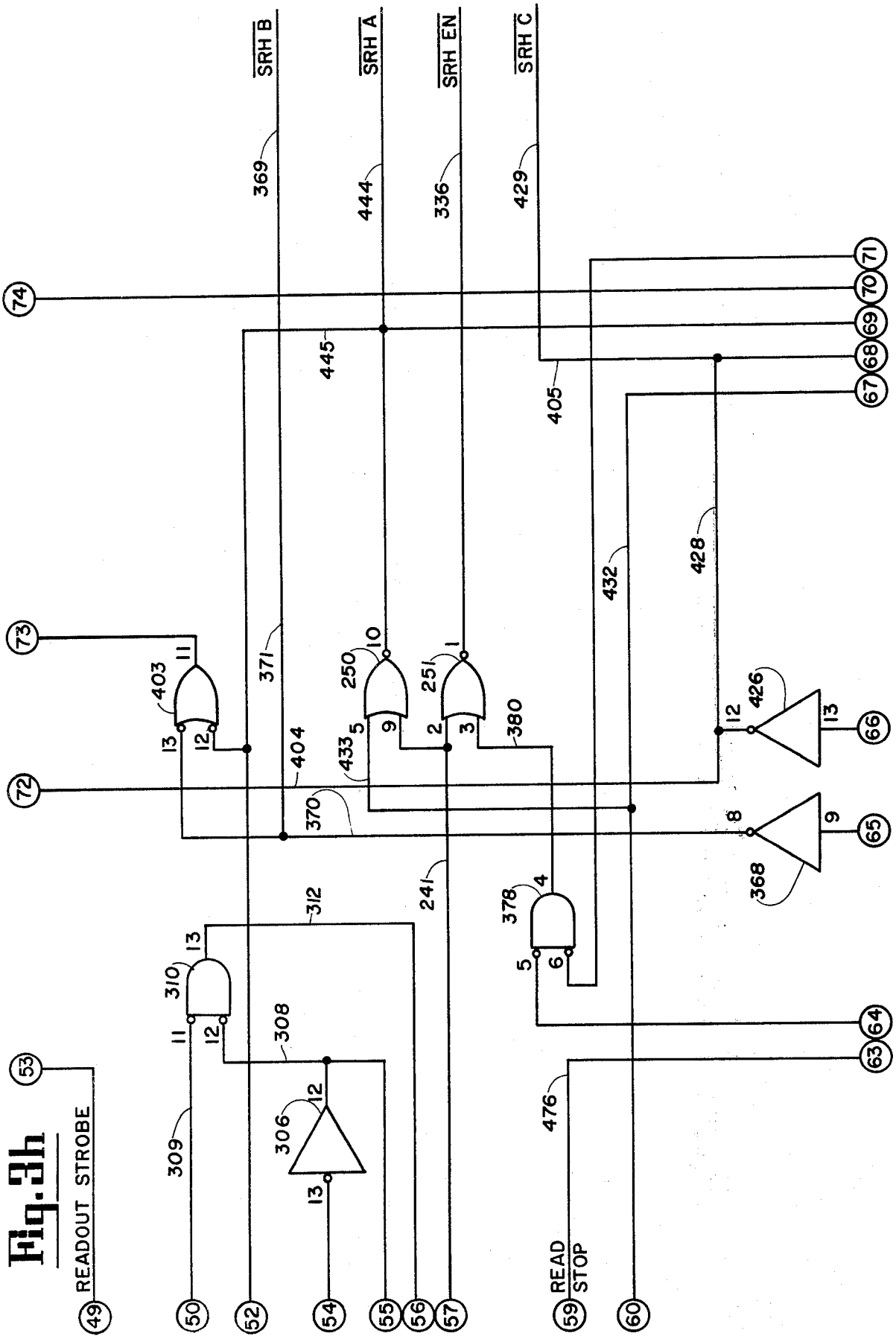
SRH B
SRH A
SRH EN
SRH C
READOUT STROBE
READ STOP
369
444
336
429
445
405
428
432
371
404
370
241
312
308
309
476
403
250
251
380
433
426
368
378
310
306
74
73
72
71
70
69
68
67
66
65
64
63
53
49
50
52
54
55
56
57
59
60

Fig. 3h

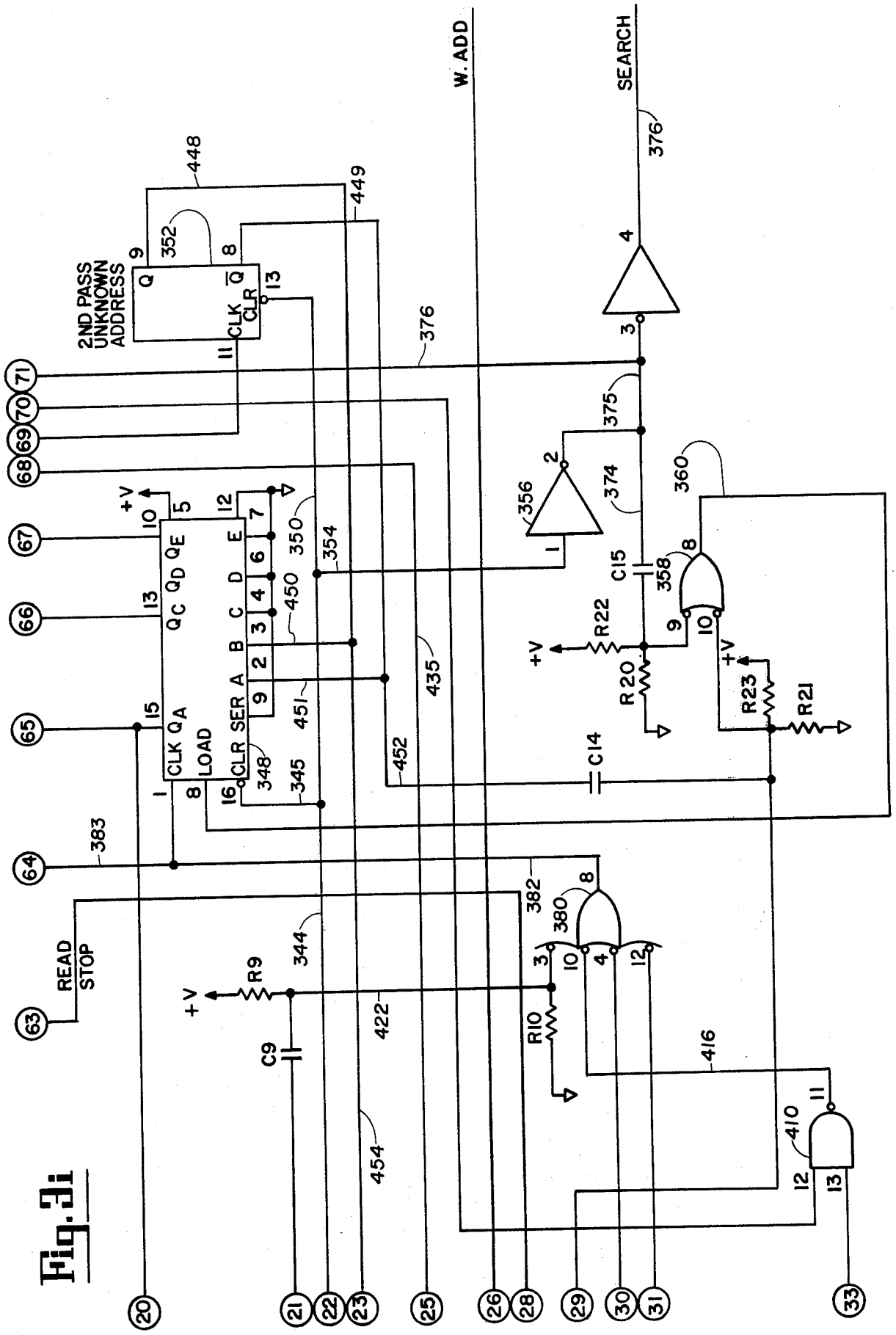
2ND PASS
UNKNOWN
ADDRESS
Q
CLK
CLR
W. ADD
SEARCH
READ
STOP
CLK
LOAD
CLR
SER
A
B
C
D
E
Q_A
Q_B
Q_C
Q_D
Q_E
+V
R9
R10
R20
R21
R22
R23
C9
C14
C15
356
358
360
374
375
376
380
382
383
344
345
348
350
354
410
416
422
435
448
449
450
451
452
454

Fig. 3i

SEARCH FEATURE FOR AN AUTOMATED TYPING SYSTEM

BACKGROUND OF THE INVENTION

The invention is designed to be utilized on an automated typing system which consists primarily of two functional units: (1) a console which contains two magnetic tape transports, logic, power supply, and operator function keys; and (2) a typewriter which is modified with an electronic keyboard, selected heavy duty parts and additional operator function keys. Such a typewriter is described in copending U.S. Patent Application Ser. No. 336,240 filed Feb. 27, 1973 entitled "Typewriter With Magnetic Memory."

An automated typing system of the class described performs the following operational functions. Information can be printed on hard copy and recorded simultaneously on magnetic tape. Information recorded on magnetic tape can be read and printed out on hard copy. Information recorded on magnetic tape can be duplicated onto a second tape in either a print or a nonprint mode. Tape reading, skipping, or duplicating can be stopped automatically on a word, line, paragraph or page and unwanted information recorded on magnetic tape can be skipped over when the tape is being read or duplicated.

The feature which is the subject of this invention adds an additional function to those described above, it allows information recorded on magnetic tape to be searched for selective printing or duplicating.

Certain variations of coding on tape for search purposes are currently being utilized and a number of other variations have been suggested in the prior art. At least one system uses binary coding printed in sequential pulses or bursts of pulses on a tape. However, binary cannot be read except at synchronous capstan speed. This must be synced so that the no pulse or zero image can be read at the proper position.

Another standard search system in use uses single marks and sequential counting. Therefore, each tape must be started at the beginning of the tape while searching. If the machine is turned on in the middle of a tape it starts reading marks at the 01 position and thus does not truly relate the correct position on the tape.

Another system suggested or in use uses a mark or code at the end of each letter or document typed, referred to as an End Of Message (EOM) code. The system in a fast forward speed sequentially steps through a tape and stops every time it reaches an EOM code. Consequently, the operator of such a system must know precisely how many letters or "messages" are located in a tape and must keep track of how many times the system has stopped, thus indicating the number of "messages" skipped.

Another system suggested by the prior art utilizes specific addresses typed along with other information on the information channel of a two channel tape. Such a system uses a discontinuity in a clock pulse imposed on the other channel of the two channel tape and a comparator whereby the absence of clock pulses on the clock channel is used as a "mark." After every mark, the address entered on the data channel is read and compared with the address desired, which has been previously entered into a register. This procedure is continued until the desired address has been located.

SUMMARY OF THE INVENTION

The current invention is a highly improved search feature for an automated typing system which utilizes pulses which are coded on an address channel of a two channel tape which are absolute numbers and which are therefore readable in either direction. The correct address is read no matter where the tape is started and at any speed. With the circuitry to be discussed below the apparatus takes the code number, for example 02, and multiplies it by 8 and adds 4, thus yielding an absolute indicator of 20 pulses $[(2 \times 8) + 4]$. This series of pulses plus or minus 4 is to give a margin of error whereby the effect of random noise pulses and the like on a tape are eliminated. To read an address the system must show at least 8 pulses for the first position and multiples of 8 for later positions.

Specifically the circuitry operates in the following manner. For recording, the operator uses numbers on the input keyboard of the typing system and a designated key such as the margin release key. The designated input key produces an address strobe to enter the address into registers of the system. The first number of a two digit search or address code is initially entered into a units register on the first address strobe. On the second address strobe, which is generated by entry of a second digit, the code in the units register is transfered to the tens register on the leading edge of the address strobe. On the trailing edge of the pulse the unit address is loaded into the units register. Therefore this part of the system operates like a right/left shift register. Also on the trailing edge of the address strobe, numbers are loaded into a counter and into readout circuitry which provide a digital display of the numbers.

When the registers have been loaded a search switch is pressed on the operating console. This starts a timer which is referred to as a "start delay" timer which starts the tape moving and allows the tape to move up to speed (6 ips) before the address is recorded.

To search for an address, the registers are loaded as above. A shift register is utilized to create a normal running condition for the tape to accomplish the objects of the invention. After data has been entered and the search switch depressed, the shift register is initially loaded and the tape moves in a fast forward mode. This continues until data appears from the selected tape deck of the two deck system. The presence of data starts an "end of address" timer. This initiates a counter which counts data bits divided by 8. A second counter, initially cleared, counts the output of the first counter. This continues until the end of the block of data is received. At the end of the receipt of data the end of address timer times out and yields a pulse to compare the second counter with the registers into which the desired number has been entered. This is done in a comparator. The output indicating the "end of address" timer also loads the visual readout from the counter.

The condition of the comparator, whether or not it is greater than less than or equal to the number in the counter, determines whether or not the tape will continue in the fast forward mode. If the number in the counter is less than the number in the registers, it continues. If the number is greater than or equal to the number in the registers, the tape stops and a read timing gap timer is initiated.

When the read timing gap timer times out the tape is moved to a fast reverse mode. It moves backwards and performs the same comparitive operation as above. This continues until the number in the counter is less than or equal to the number in the registers. At this time the tape again stops and the read timing gap timer is again initiated and times out.

As should be obvious the purpose of the read timing gap timer is to assure that the tape is not jerked from one direction of movement to the reverse direction of movement. When the read timing gap timer times out, the condition mode shift register advances to a "run forward" mode which is the normal slow forward speed. The above process is then repeated again, i.e., the apparatus looks at the data, loads the registers in the counter and compares. This continues until the number in the counter is greater than or equal to the number in the registers. If the number is equal to the number in the registers, the tape then stops and the coded position has been located. However, if the number in the counter is greater than the number in the registers then the mode condition shift register is reset to wait prior to converting to a fast reverse speed. The read timing gap timer is initiated until it times out and a second pass flag is set on a second pass counter. The device runs the tape in fast reverse until the number in the counter is less than or equal to the number in the registers. It waits and then runs forward again and rechecks, stops and displays that number.

Therefore, if a search number is missing such as address 05, the apparatus operates in fast forward until it reaches 6, converts to fast reverse and goes back to 4, operates in run forward until it hits 6, and then operates in fast reverse until it hits 4 and then runs forward to 4 and stops, as the address number 05 cannot be found. With this method of reading tape, addresses must be in ascending order, i.e., 1, 2, 3, 12, 14, but need not be a continuous or consecutive sequence. Any time an address is passed when reading, skipping or duplicating, that address is displayed.

To record the address of the search code, the registers, counters, and readout are loaded as above. A search switch is pressed to set a flip-flop which enables a start delay timer and a record address timer. The start delay timer allows the tape to reach a speed of 6 ips. (run forward). The data is then written on the tape. Digits are subtracted from the digit counter at one-eighth the rate that they are written on the tape. Four pulses after the digit counter is equal to zero −4 a signal clears the original flip-flop set. When this is cleared it stops the data output and thus no more data is entered on the tape. The apparatus then waits until the record address timer clears which stops the tape motion. The record address timer provides a uniform record length making it possible to enter a 99 in place of a smaller number without disturbing other data.

Additional features as more fully described below are utilized to coordinate and make the invention a truly efficient system. For example, logical design enables tapes to be duplicated with address codes or allows information to be selectively produced with the use of a "skip" key. Another important feature permits the operator to move forward or backward one block of data to make corrections or alterations without erasing previously recorded information.

BRIEF DESCRIPTION OF THE DRAWINGS

FIG. **1** is a perspective view of the console showing both tape deck stations, the visual search code readout and designated Operator Function Keys;

FIG. **2** including FIGS. *2a–2d*, is a schematic diagram of logical gating which is associated with and responsive to the circuitry in FIG. **3** to produce the various modes of tape operation; and

FIGURE **3** including FIGS. *3a–3i*, is a schematic diagram of the logical gating which allows the search codes to be entered on the tape, to be read, to be duplicated and to be searched to obtain a code position desired.

DESCRIPTION OF THE PREFERRED EMBODIMENT

FIG. **1** shows a console **22** which houses two tape stations **24, 25** referred to as deck **1** and deck **2**, respectively, each of which is suitable for cassette tapes. The tape is preferably driven at an average speed of **6** inches per second by tape capstans in a conventional manner and at an average speed of 90 ips per second by reel motors for search and rewind. The console also has a keyboard of fifteen keys or switches, **28** through **42.** One or more of these keys are used for controlling recording and playback.

Indicia subscribed on each key designates the function that the system will perform when that key is depressed. For example, the rewind **1** key (RWD-**1**) **28** rewinds the tape in station **1.** Rewind **2** (RWD-2) **29** rewinds the tape in station **2.** Depressing the read key (READ) **30** activates read circuitry in station **1** or **2.** Read **2** (READ **2**) **31** enables the system to read from station **2.** The skip key (SKIP) **32** is depressed to skip words, lines, paragraphs or pages. The duplicate key (DUP) **33** activates a transfer of recorded information from tape to tape. The adjust key (ADJ) **34** activates a right-hand margin adjust feature. The record key (REC) **35** enables the system to record information on a cassette tape in station **1.** The code key (CODE) **36** plus various keys on the typewriter associated with the console records special control codes on the tape. The word key (WORD) **37** enables the system to read, or skip by word. The line key (LINE) **38** enables the system to read, skip, or duplicate by line. The paragraph key (PARA) **39** enables the system to read, skip, or duplicate by paragraph. The page key (PAGE) **40** enables the system to read, skip, or duplicate by page. The stop key (STOP) **41** when depressed, stops tape motion and all other activity. The search key (SEARCH) **42,** when depressed, records search codes in the record mode and activates the search in the read mode.

The console **22** may be attached to any compatible typewriter (not shown) with appropriate modifications. Such a modified typewriter is described on copending U.S. Patent Application Ser. No. 336,240 filed Feb. 27, **1973** entitled "Typewriter With Magnetic Memory."

As indicated above, the search feature is capable of recording numbers on tape, reading numbers previously recorded on tape, and searching the tape to read numbers which were previously recorded thereon. In addition, logical circuitry which is a part of this invention also functions to establish the running conditions during the search mode of the operation.

Entering Numbers Into The Counters, Registers, and Indicator Prior to Recording or Searching

Referring now to FIG. 3, particularly FIG. 3*c*, when the unit is energized by turning on the power, a master clear signal is generated on input line **101.** This functions to clear both the units register **112** and the tens register **114,** to clear a search flip-flop **116** to be discussed below, and to clear a record address timer **118** also discussed below. In addition, the master clear will clear both a units and a tens counter, **120, 122,** respectively, and the visual readout indicator **75** which is shown on the console **22** in FIG. **1** between the decks **24, 25.**

The master clear is a low going pulse. The pulse is inverted with inverter **124** and then is reinverted to a low going pulse with inverter **126** along line **128.** This is fed to input pin **4** of a positive input NAND gate **130** along lines **132, 133** and **134.**

Since the positive input NAND gate **130** is being utilized in the logical circuit to perform an alternative function, that is to operate if either the input to pin **4** or the input to pin **5** is low, its representation on the schematic is that of an NOR gate which responds to low inputs represented by the circular inversion signal at the pins. This representation is used throughout the schematic diagraming to indicate not only the nature of the element but the function which it will perform. In these situations the gate will be referred to as a negative input NOR gate. When the input to negative input NOR gate **130** goes low the output on pin **6** is a high going pulse which clears the units register, the high pulse output being fed along lines **136** and **137** to input pins **4** and **13** of the units register. Since no alphanumeric code has been entered, the input to the register **112** on lines **139, 140, 141, 142** will be zero. This zero indication is loaded into the units register **112** when input pins **4** and **13** are clocked.

The high going pulse is also fed to input pin **2** of a second negative input NOR gate **144,** the high going output of which on pin **3** is fed along lines **146** and **147** to clock input pins **4** andd **13** of the tens register **114.** Since the input to the tens register **114** is the output of the units register **112,** fed along lines **150, 151, 152,** and **153,** the tens register **112** will also be cleared.

The units and tens counters, **120** and **122** respectively, are also cleared by the high signal from output pin **6** of NOR gate **130.** This signal is fed along line **136,** inverted with inverter **165** and fed to negative input NOR gate **167,** the high output of which is inverted with inverter **173** and connected with line **174** and lines **175** and **176** to input pins **11** of the units and tens counters **120, 122,** which clears the counters **120, 122** by loading the zeros contained in the registers **112, 114** into the counters **120, 122.**

As will be explained later, when the first digit of a number is entered into the system, the number in the units register will be loaded into the tens register and consequently if only a single digit number is entered, the zero presently in the units register will be transferred to the tens register which will give a correct readout and operation of the system. The low pulse obtained from inverter **126** is also fed along lines **133, 178** through negative input NOR gate **180,** input pin **4,** inverted with inverter **181** and is utilized to clear a search flip-flop **116,** to be discussed below. That same output is also fed along line **183** to clear a record address timer **118,** also to be discussed below.

After the power is on and the system is cleared and ready for operation, a number may be entered on the typewriter keyboard.

As each number is entered through the numeric characters of the keyboard with a designated key such as margin release depressed, it is converted with a BCD converter (not shown) to binary coded decimal representation. After the number is converted with the decimal to binary coded decimal converter to a four bit binary number, the least significant digit is present on line **139,** the most significant digit is present on line **142,** and the remaining significant digits on lines **140** and **141** in descending order, respectively. As each numeric key is depressed an approximate two microsecond low going pulse is produced on the system input line **185,** designated ADDRESS STROBE. This low going pulse on line **185** is detected by negative input NOR gate **144** at pin **1** and this produces a high output on pin **3** of the NOR gate **144.** This opens up the gate on the tens register **114,** pins **4** and **13,** which loads the number from the units register **112** into the tens register **114.** The number from the units register **112** is present on pins **16, 14, 10** and **9** of the units register **112** and is fed to the input of the tens register **114** along lines **150, 151, 152, 153** to pins **2, 3, 6** and **7,** respectively. If this is the first digit being entered, the previously cleared units register **112** will again clear the tens register **114.**

When the address strobe goes away after about a 2 microsecond pulse it will close negative input NOR gate **144** and the output at pin **3** will go low. Thus, a low signal will be present on pin **2** of negative input NAND gate **160.** However, the second input on pin **3** of the negative input NAND gate **160** will not go low instantaneously because the output of pin **3** of negative input NOR gate **144** is fed along line **186** to pin **5** of a NOR gate **157,** the output of which is connected to a delay capacitor, C5. Therefore, the output of the negative input NAND gate **160** will be about a 2 microsecond pulse as well. This output is fed along line **162** inverted by the inverter **165** through negative input NOR gate **130,** pin **5** to pin **6,** along line **136** and loads the units register **112** by opening the gates through input pins **4** and **13** so that the number currently on lines **139, 140,** 141, and **142** is loaded into the units register **112.** In the same manner, the output is inverted with inverter **165** and the low output is fed through a negative input NOR gate **167,** pin **5** to pin **6,** is again inverted with inverter **173** and loads into the units counter **120** and the tens counter **122** the numbers in the registers **112, 114.** This is accomplished along line **174** and lines **175** and **176,** respectively, which are connected to pin **11** on each of the counters **120, 122** to load those counters **120, 122.**

The numbers in the registers **112, 114** are loaded into the counters **120, 122** along lines **190, 191, 192** and **193,** respectively, for the units counter **120** and lines **195, 196, 197** and **198,** respectively, for the tens counter **122.**

Also, the high output from the negative input NOR gate **167,** pin **6,** is fed along line **174** to NOR gate **170,** pin **9** to **10,** and is fed along line **171** to load visual indicators **75** in the readout circuit, pin **5.** The numbers in the counters **120, 122** are also fed to the indicators **75,** the units counter **120** being fed to the unit readout device **75** from output pins **3, 2, 6,** and **7,** respectively,

along lines **200, 201, 202** and **203** to input pins **8, 1, 2** and **3**, and the contents of the tens counter **122** from output pins **3, 2, 6** and **7** being fed along lines **205, 206,** 207 and **208** to input pins **8, 1, 2** and **3** of the tens visual indicator **75.**

If, for example, the number **21** is the desired address, the number **2** has now been entered into te system and the registers **112, 114,** counters **120, 122** and visual readout **75** all indicate an 02 in the system. The next stip is to enter a **1** and going through the same pulsing sequence, the **2** will be removed to the tens register **114,** the 1 will be entered in the units register **112,** the registers **112, 114** will be loaded into the counters **120,** 122 and the number in the counters **120, 122** will be loaded into the storage register and readout devices **75.** The number **21** will then be present in the system.

After the register **112, 114,** counters **120, 122** and readout device **75** are loaded with the number desired, two procedures can take place. The number can either be recorded on the tape or the tape can be searched to look for the number.

Recording Numbers on Tape

If a number is going to be recorded on tape, the record switch **35** is depressed which produces a record enable or write enable on input line **210.** That enable is fed along lines **210, 211** to input pin **5** of a NAND gate **213.** Since the system is not in the skip mode of operation, a low signal is present on skip input line **212** which is inverted by an inverter **214,** pin **1** to **2,** and fed along line **216** to enable pin **4** of the NAND gate **213.** Input pin **3** of the NAND gate **213** is enabled because the system is not reading data at the time. The input to pin **3** originates from the read output counter **215,** pin **12,** is fed along lines **216, 217, 218** and **219,** is differentiated with C2, R3 and R4 and then inverted by inverter **221,** fed along lines **223** and **224** to the input pin **3** of the NAND gate **213.**

The search switch **42,** which is also a contact closure upon depression of the search button **42,** gives a low going signal on input line **226.** This is differentiated with resistors R12 and R13 and capacitor C7, R11 and C6 being debounce components. This gives a differentiated pulse which is fed along line **228** to negative input NOR gate **167,** the output of which in the manner described above loads the number presently in the register **112, 114** into the counters **120, 122.** The high output of negative input NOR gate **167,** pin **6,** is also fed along line **169** to NOR gate **170** to indicate the number being recorded on the readout device **75** along line **171.**

The differentiated pulse is also fed along line **230** to preset the search flip-flop **116,** pin **4.** Since the write enable input is also being fed along lines **210, 232** and **233** to pin **11** of a negative input NAND gate **235** and to pin **2** of an integral AND gate **236** on a start delay timer **240** as a high signal, it disables negative input NAND gate **235** and it enables the AND gate **235** which initiates the tape write sequence. That initiates the start delay timer **240.**

When that timer **240** starts, the low output which appears on pin **4** of the start delay timer **240** is inverted with an integral inverter **242** in a record address timer **118,** which enables an integral AND gate **244** to initiate the record address timer **118.** The second enable on the integral AND gate **244** is the write enable signal which is fed to pin **10** of that gate **244** along lines **210, 232** and **246.** The record address timer **118** is set for approximately **240** to **250** milliseconds with a **230** millisecond time minimum. When it is initiated, pin **5** goes high and is fed along line **247** to the inputs, pins **2** and **9,** respectively, of two NOR gates **250, 251.** The outputs of each are utilized as will be explained below with reference to FIG. **2** to start the tape at a run forward (6 ips) speed.

It takes a certain amount of time for the tape to get to recording speed and thus the start delay timer **240,** which was fired as explained above, is utilized to delay recordation of data until that timer **240,** which is a shorter time of approximately 30 milliseconds, times out. This is accomplished in the following manner.

Because a record sequence has been initiated the record address timer **118** is active and the low output of the timer **118,** pin **12,** is fed from output pin **12** along lines **254, 255** to enable a divide by **10** counter **258** through input pins **2** and **3.** The fact that the start delay timer **240** is active prevents the first divide by ten counter **259** from going active as the high output on pin **13** of the start delay timer **240** is fed along line **261** to the input pins **2** and **3** of that divide by ten counter **259.** When the start delay timer **240** times out this will activate, along the same line **261,** pins **2** and **3** of the counter **259** and that counter **259** will be active as well. The third counter **263,** which is a divide by 16 counter, is activated along line **264** when the search enable flop **116** is set. When all three divide by counters **258, 259,** 263 have been activated, the input signal of 960 kilohertz on input line **265** will be divided by the counters **258, 259, 263** so that 4.8 kilohertz will appear at output pin **12** and input pin **1** of the divide by 16 counter **263** and 0.6 kilohertz will appear at pin **11** of the divide by 16 counter **263.**

The 4.8 kilohertz signal from pin **12** of the divide by 16 counter is fed along line **262** to an amplifier board which records those pulses on the tape in a conventional manner. The output signal is a conventional square wave signal which is recorded with conventional equipment (not shown). The output of pin **11,** which is 0.6 kilohertz, obviously emits 1 pulse every time 8 pulses are emitted on output pin **12** to be stored on the tape. This output is fed along lines **266, 267,** is inverted by inverter **269** and is utilized to count down the number in the units counter **120** with input pin **4.** Consequently, every time 8 pulses are recorded on the tape, the number in the counters **120, 122** is reduced by 1.

As is conventional with counters, the number in the units counter **120** will be counted down to zero, a borrow pulse will appear on pin **13** of the units counter **120** which will reduce the number in the tens counter **122** by a factor of 1 and will fully load the units counter **120.** This will continue until no numbers are left in either the tens counter **122** or the units counter **120** and then a borrow pulse will appear on pin **13** of the tens counter **122.**

Since the output of divide by sixteen counter, pin **16,** is at one-eighth the rate of the initial output, pin **12,** the aforementioned formula of eight times the address in the units counter **120** plus four ($8N + 4$) is recorded on the tape. This is accomplished in the following manner.

The output from pin **11** of the divide by 16 counter **263** is high for the period of four pulses emitted on output pin **12,** and then is low for four pulses emitted from the output pin **12.** Each time it goes low, it is fed along lines **266, 267** to inverter **269** which clocks the units

counter **120** down one additional number. Consequently, since the low point signal does not come until after the first four pulses have been emitted on output pin **12**, the units counter **120** and consequently the tens counter **122** is not clocked until four additional pulses have been emitted from the last time that the interval of eight pulses were emitted. In other words, the units counter will not emit a borrow pulse until the next time the clock goes high, but the clock does not go high until four pulses after the initiation of a series of eight pulses. When the clock does go high, the borrow signal is emitted on pin **13** of the tens counter **122** which is fed to negative input NOR gate **180** along line **271.** The high output on pin **6** of the NOR gate **271** is inverted with an inverter **181** and that low output is utilized to clear the search flip-flop **116** which initiated the process. When that flip-flop **116** is cleared pin **6** goes high and is fed along line **264** to disable the divide by 16 counter **263** on input pins **2** and **3.**

Note the other two timers **240, 118** are still enabled until they time out. The balance of the timing mechanism is for the purpose of a fixed length record. Therefore, the tape is run a certain length during the period of time that the record address timer **118** has been activated. This means that if recording is initiated and only twelve pulses are to be placed on the tape even though the pulsing, circuitry will be active for only a fairly short amount of time, the length of time the tape runs will be the same. By this design, utilizing variable data time, but fixed length record time, an operator of the system may accidentally record a one in an address location, later come back to that address location, and put the number **99** in the same position without using any additional length of tape.

Recording may also be done in another sequence. This is in the duplicating sequence in which tape from one deck, deck **2,** is read and recorded on tape in deck **1.** In this sequence any time an address is read on deck **2** it is recorded on deck **1.** This is accomplished much in the same manner as above with the following modifications. The system is still in a record sequence of operation and thus the write enable input on input line **210** is still present as explained above. When an address is read, which is explained more fully below, the presence of address data and the absence of address data is detected by a data counter **215.** A low going signal will appear on output pin **12** of the counter **215** when address information is no longer being read from the tape. This is differentiated with C2, R3 and R4 and fed along lines **216, 217, 218** and **219** to the input of inverter **221** and the high going pulse that appears on pin **10** of the inverter **221** is fed along line **224** to input pin **3** of the NAND gate **213.** As explained above, pins **4** and **5** are high and when **3** goes high, a pulse is emitted from pin **6** of the NAND gate **213** which clocks the search flip-flop on through pin **3** to initiate the record sequence as explained above.

As will be explained during the read sequence following, the number in the counter will be the number which is read from the tape in the deck **2** station and accordingly, the number recorded on the tape in deck **1** will be a multiple 8 plus 4 of that address.

Read Sequence for Duplicating or Locating a Specific Address

When the system is activated to read addresses from one of the tapes for either duplicating or locating a specific address the following inpul signals will exist. When locating a specific address input data read from tape **1** will appear on input line **280** designated address **1.** Input data from the second tape or deck **2** will appear on input line **282.** In addition a signal may or may not appear on the "read **2**" input line **283.** This signal is conditioned by the operator of the console. If information is desired from deck **2** the "read **2**" button **31** will be depressed and an input signal will appear on input line **283** indicating that deck **2** will be read. In the event that the read **2** button **31** is not depressed then no signal will appear at the read **2** input and, as explained below, data will be read from tape **1.** Since in the preferred embodiment duplication only occurs from deck **2** to deck **1,** the read **2** enable will always be active when duplicating and data will only be read from that tape deck. It should be understood, however, that with minor modifications either deck could be duplicated to the other and these embodiments are within the intendment of the invention.

The data on tape **1** is fed from input line **280** to pin **1** of a positive input AND gate **285.** The AND gate **285** may or may not be enabled depending on whether or not an enable signal appears on the read **2** input line **283.** The information from deck **2** will be fed along the line **282** to pin **10** of another positive input AND gate **286.** The output of both AND gates **285, 286** are fed to a NOR gate **288** and the selected data will appear at the output pin **8** of that NOR gate **288.** If "read **2**" is enabled the high signal is fed along line **283** to input pin **9** of positive input AND gate **286** to become the second enable signal for that AND gate **286.** In addition, the other positive input AND gate **285** is disabled in that the high signal from line **283** is fed along line **289** to inverter **291,** pins **3** to **4,** to disable pin **13** of positive input AND gate **285.** Conversely, if read **2** switch has not been enabled the low input appearing on line **283** will be inverted by inverter **291** to a high signal to enable pin **13** of positive input AND gate **285** so that the output of the AND gate **285** will be the data read from the tape in deck **1** along the address **1,** line **280.** In any event, whichever address is enabled by virtue of the read **2** enable that output will be fed to NOR gate **288** and will appear as the output of pin **8** thereof.

Therefore, the pulses which were previously recorded on the selected tape will appear as the output of pin **8** every time the tape passes those numbers. When pulses first appear at the output of pin **8** they are fed to the input of a retriggerable one shot **295** along lines **296, 297** through inverter **298** and AND gate **302** which are integral parts of the timer **295.** As long as the pulses come in close enough succession the one shot **295** will not clear. If the one shot **295** does not clear it holds pins **2** and **3** of a data counter **215** through line **303** to enable the counter **215.**

The output of NOR gate **288,** pin **8,** is also fed along lines **296** and **305** to the input of the counter **215** at pin **1.** The counter **215** is a divide by 16 counter. After four input pulses pin **11** goes high and after four additional pulses have been counted, output pin **11** goes low. The low going edge is differentiated by C4, R6 and R7 and the pulse is inverted by inverter **306** and fed along line **308** to the input, pin **12** of a negative input NAND gate **310.** The output on pin **13** of the NAND gate **310** is fed along lines **312, 313** to clock the last section of the divide by 16 counter **215,** input pin **14.** When this register **215** is clocked it indicates that there has been at

least an eight bit minimum input. When that last section has been clocked an output signal appears on pin **12** of counter **215** and creates a DC hold. This is fed along lines **216, 309** to input pin **11** to disable negative input NAND gate **310** so that the register cannot be clocked more than once. In addition, the output pulse from NAND gate **310** is differentiated with C1, R1 and R2 and the low going pulse is fed along lines **312** and **314,** inverted with inverter **315** and utilized to clear the counters **120, 122** at input pins **14** thereof along lines **316** and **318.** Therefore, after eight pulses have been counted, a sufficient data has appeared on the tape to indicate that an address is being read. It should be understood that if there is random noise on the tape such as one or two pulses there will be no output from the divide by 16 counter **215** and thus the circuitry will not be activated.

As pulses continue to appear on the input the retriggerable one shot **295** will continue to stay latched as long as there is signal input. Therefore, every time the signal on pin **11** of the divide by 16 counter **215** goes low, signifying that eight additional data pulses have been counted, the low going signal is differentiated with C4, R6 and R7 and fed along line **317** to inverter **306,** pin **13** to **12** which is fed along line **319** to positive input NAND gate **320,** pin **2.** NAND gate **320** is enabled through pin **3** by the output of the retriggerable one shot **295** from output pin **5** along line **322.** As long as this one shot **295** remains high because continuous pulses are being received the circuit will continue to count the number of pulses on the tape divided by eight. This is done in the following manner.

The output of positive input NAND gate **320,** pin **3,** will be pulses equivalent to the number of pulses on the tape divided by eight. These pulses are fed along line **325** to the units counter **120,** input pin **5** which is an up/down counter and along output pin **12** of the units counter **120** along line **327** to input pin **5** of the tens counter **122** when pulses increase above decimal nine. The units and tens counters **120, 122** will continue to count pulses until the data disappears from the tape. That will be the end of the address that was written on the tape. When the data disappears the retriggerable one shot timer **295** will time out which will remove the enable from both the divide by 16 counter **215** and positive input NAND gate **320.**

When the divide by 16 counter **215** is disabled this will clear the eight bit minimum output signal appearing on pin **12** and when this signal goes low it will produce a differentiated pulse through capacitor C2 and resistors R3 and R4 which is fed along lines **218** and **219** through inverter **221,** pin **11** to pin **10.** This pulse is fed along line **340** through NOR gate **170** to load the address read in the readout device **75** along line **171.** The readout indicators **75** obtain the number from the units counter **120** along lines **200** through **203** and from the tens counter **122** along lines **205** through **208.**

Searching for a Number

In order to search for an address on either deck **1** or deck **2** the initial conditions are as follows. In accordance with the procedures to load a number into the registers and counters and readout registers, the number is loaded as described above. Since a normal search is being performed the circuitry is not in a record sequence of operation and thus the write enable signal on input line **210** is low. At this point the operator pushes the search switch **42.** This loads the number into the registers **112, 114** into the counters **120, 122** and the readout **75** as described previously. This is accomplished from the signal through the search switch **42** being differentiated with R12, R13 and C7, that low going signal being fed along line **228** to the input pin **4** of negative input NOR gate **167,** the high output of which on pin **6** is fed along line **174** to NOR gate **170** and along line **171** to the readout register. In addition, the high going signal from negative input NOR gate **167** is inverted with inverter **173** and the low output on pin **10** is fed along lines **174, 175** and **176** to the units counter **120** and the tens counter **122,** respectively.

At the same time the differentiated signal is fed along line **230** to enable the search flop **116** on input pin **4** in the same manner as if the circuitry was in the record sequence of operation. However, the input signal to pin **2** of the start/delay timer **238** utilized in recording is low due to the low write enable signal on line **210** and thus, the record sequence is not initiated. Alternatively, the input to negative input NAND gate **235,** pin **11,** will be low to initiate the read sequence. The second input on pin **12** of negative input NAND gate **235** will naturally be low due to presetting the search flip flop **116,** yielding a low output on pin **6** of that flop **116,** which is fed to input pin **12** along lines **340** and **341.**

As the output of the negative input NAND gate **235** goes high, that signal is fed along lines **344, 345** to remove the clear from a mode register **348,** input pin **16.** It also is fed along line **350** to input pin **13** of a second pass flip-flop **352** which removes the clear, and is used as an unknown address counter. The outputs of second pass flip-flop **352** are also utilized to condition the mode register **348** at input pins **2** and **3** thereof. The low signal on pin **9** of flop **352** is connected to input pin **3** of mode register **348** along lines **448** and **450** and the high signal on pin **8** of flop **352** is connected to input pin **2** of the mode register **348** along lines **449** and **451.**

Finally, the high signal is fed along line **354** to inverter **356,** the low output of which is differentiated with C15, R22 and R20 and the differentiated pulse is fed to input pin **9** of negative input NOR gate **358,** the output of which, on pin **8,** is fed along line **360** to load the mode register **348** at input pin **8.** This mode register **348** was set and conditioned as explained above so that when the load pulse appears on pin **8,** the mode register **348** is initiated on position A, the first designated position.

The output of position A starts the tape moving at a fast forward speed by creating output signals on output lines **371, 366** designated "search B" and "search enable." This is accomplished in the following manner.

The output from pin **15,** QA, is inverted with inverter **368** and fed along line **370** to the output line **371** which is designated search B. In addition, search enable has been enabled from the inverted output on pin **2** of inverter **356** being fed along lines **374, 375** and **376** to input pin **6** of negative input NAND gate **378,** the output of which is fed along line **380** to NOR gate **251** to create the enable on output pin **1.** The second input of negative input NAND gate **378** on pin **5** is enabled by the low signal which appears on the output of negative input NOR gate **380** along lines **382** and **383.** As will be explained below, a high output will appear on the output pin **8** of the negative input NOR gate **380** to disable that NAND gate **378** when certain conditions

occur such as reaching the end of a tape prior to reversing direction.

The tape moves forward at a fast high speed and addresses are read as they appear on the tape as explained above. Also as explained above, a desired address, or the address which is being searched for, has been entered into the units and tens register **112, 114** and the addresses which are being read are being entered into the units and tens counters **120, 122** as explained above. The output of each of the registers **112, 114** and counters **120, 122** are connected to comparators **385,** 387 referred to as the units comparator **385** and the tens comparator **387.** The counter **120, 122** outputs are connected to the comparators from output pins **3, 2, 6** and **7** of the counters **120, 122** to input pins **10, 12, 13** and **15** of the comparators **385, 387.** Similarly, the **1,** 14, 11 and **8** output pins of the registers are connected to the **9, 11, 14** and **1** input pins of the comparators **385, 387,** respectively.

The comparators **385, 387** have three outputs appearing on pins **5, 6** and **7.** A high signal will appear on output pin **5** if the desired address is greater than the address being read, a high signal will appear on output pin **6** if the desired address is equal to the address being read and a high output will appear on pin **7** if the desired address is less than the address being read. These outputs are connected to positive input NOR gates **392** and **393,** having output pins **1** and **4.**

Since the output signal signifying that the desired address is equal to the address being read is connected to both NOR gates **392, 393** at pins **3** and **6** thereof, the logical significance of the outputs of the NOR gates **392, 393,** at pins **1** and **4,** respectively, will be that the signal on pin **1** will go low when A is less than or equal to B and the signal on pin **4** will go low when A is greater than or equal to B.

The output of these NOR gates are connected to a select gate **290** comprising two negative input NOR gates **395, 396** and an AND gate **398** which is controlled by whether or not the tape is moving in the forward or reverse direction.

If the tape is moving in the forward direction, the select gate **290** is enabled to look for an address on the tape which is greater than or equal to the desired address. If the tape is moving in the reverse direction the select gate **290** is enabled to look for an address which is less than or equal to the desired address. This is accomplished with input pins **2** and **5** of the select gate **290.**

Input pin **5** is connected through an inverter **401** and negative input NOR gate **403** to the signal designated search A and search B, which, as will be explained below, cause the tape to run forward at a normal recording speed or to run forward at a fast speed, respectively. Input pin **2** of the select gate **290** is connected directly through lines **404** and **405** to the signal designated "search C" which, as will also be explained below, causes the tape to move in a fast reverse mode of operation. The output indicating that the address being read is greater than or equal to the desired address or less than or equal to the desired address is fed from output pin **6** along line **408** to a positive input NAND gate **410,** pin **12.** The second input to the positive input NAND gate **410,** pin **13,** is obtained along lines **412, 414** from the output of an inverter **221** which, as explained previously, indicates that an address with at least eight bits is being read. Consequently, the NAND gate **410** will be enabled when the address being read is greater than or equal to the desired address when the tape is moving in a fast forward direction.

When that occurs, an output pulse will appear at output pin **11.** This is fed along line **416** to input pin **10** of the negative input NOR gate **380,** the output of which, on pin **8,** is fed along line **383** to clock the mode register **348.** This moves the mode register **348** to its second position, designated position B, appearing on output pin **3** which is a rest position. Two rest positions are utilized at various times throughout the search sequence so that the tape is not jerked from one mode of operation to another mode of operation. This is accomplished with read timing gap timer **414** which is initially clocked because the mode register **348** has moved away from position A. Consequently, a low signal will appear on output pin **15** which is fed along line **418** to input pin **1** of the read timing gap timer which is shown as an inverter **420** which provides the second enabling signal to initiate that timer **414.** This timer **414** takes approximately **140** milliseconds to time out and consequently the tape motion must come to a halt within that allocated time.

When the read timing gap timer **414** expires the output is differentiated from pin **13** with C9, R9 and R10 and the differentiated pulse is fed along line **422** to pin **13** of negative input NOR gate **380.** This clock pulse appears on output pin **8** and if fed along line **382** to clock the mode register **348** from position B to position C. The output of position C, output pin **13,** is inverted with inverter **426** and fed along lines **428** and **429** to output pin **12** designated search C. As explained above, search C will cause the tape motion to be controlled in the fast reverse mode of operation.

As above, addresses will be read in the reverse direction but because the tape is moving in the fast reverse mode of operation rather than the fast forward, it causes the select gate **290** mentioned previously to look for an address less than or equal to the desired address. When an address appears that is less than or equal to the desired address, output pin **6** of the select gate **290** again goes high which is fed to input pin **12** of the NAND gate **410** to produce a pulse which shifts the mode register **348** into position D to start the rest timer **414** again.

The read timing gap timer **414** is initiated in this instance off the output of the inverter **426** which is fed along lines **428, 435, 436** to the second enabling input of the AND gate **440** on the read timing gap timer **414.** Consequently, when the mode register moves from position C to position D, the low output on pin **13** is inverted to a high output on pin **12.** This high output is fed along those lines to the NAND gate **440** to enable it. After a wait of 140 milliseconds, in the same manner, the mode register **348** is shifted into position E, the output of which, on output pin **10,** is connected with lines **432** and **433** to input pin **8** of NOR gate **250,** the output of which initiates the search A mode of operation. As explained below, this will cause the tape to run forward in a normal or slow speed.

As the tape moves forward at a slow speed the addresses are read in the same manner as described above and if the address is located the output of pin **6** of the comparator **387** will indicate that the address being read is equal to the desired address. As will be explained below this will clear the system and the tape will be stopped in the proper position.

Assume, however, that the number on the tape is misread or does not exist. The system is designed to check twice for each and every number. Consequently, if an address greater than the desired address is read it will be indicated on output pin **5** of the comparator register **387** and will be fed along through positive input NOR gate **393** to select gate **290.** The output signal appearing on pin **6** of the select gate **290** is fed along line **408** through positive input NAND gate **410,** line **416,** to negative input NOR gate **380** and along lines **382, 383** to again clock the mode register **348** out of the run forward mode of operation.

When the mode register **348** shifts the absence of the high signal from output pin **10** of the mode register **348** is detected along lines **432, 433** by the positive input NOR gate **250** creating a high output on pin **10** of the NOR gate **250** which is fed along lines **444, 445** to clock the second pass, unknown address flip-flop **352,** input pin **11.** When the second pass flip-flop **352** is clocked, the output signals from pin **9** and pin **8** are fed along lines **448, 450** and **449, 451,** respectively, to input pins **2** and **3** of the mode register **348.** Consequently, instead of initiating the system during the second pass in the fast forward position which is governed by input pin **2** of the mode register, the system is initiated in the rest position which is input pin B. In addition, the low signal from output pin **8** of the flip-flop is fed along line **449** and **452** through a differentiator comprising C14, R21 and R23 to the input of negative input NOR gate **358.** The output pulse which is emitted therefrom is fed along line **360** to load the mode register in mode B.

The high output from output pin **9** of the second pass flip-flop **352** is also fed along lines **448, 454** and **456** to the input of positive input NOR gate **460,** the output of which is fed along line **462** to input pin **9** of negative input NAND gate **464** which partially enables that NAND gate indicating that the system is making a second pass.

Finally, the pulse generated by the differentiator comprising C14, R21 and R23 is also fed along line **466** to clock the read timing gap timer **414** with input pin **3** thereof. When the read timing gap timer times out the signal from output pin **13** is differentiated with differentiator C9, R9 and R10, is fed to negative input NOR gate **380,** the output of which taken from output pin **8** and is fed along lines **382, 383** to clock the mode register **348** to the fast reverse mode of operation, position C.

The tape runs in the fast reverse mode of operation until a signal is generated from output pin **6** of the select gate **290** indicating that a number has been read which is less than or equal to the desired address. Since an address was not detected in the fast forward or run forward modes of operation initially that was equal to the desired address, it is unlikely that an address will now be read which would be equal to the desired number. Consequently, the first indication emanating from that gate **290** will be that an address has been read which is less than the desired address. When that occurs, the mode register **348** will again be clocked to the rest position, position D, and after the timer **414** times out, the mode register **348** will again be clocked to position E which is run forward.

As explained above, there is a second pass signal on pin **12** of positive input NOR gate **460,** the output of which on pin **13** is fed along line **462** to input pin **9** of negative input NAND gate **464.** Consequently, at the termination of the next sequential address which is read with counter **215,** output pin **12,** the output will go low, the trailing edge of the end of the data will be differentiated with differentiator C2, R3 and R4 and will produce a low going pulse at input pin **8** of negative input NAND gate **464.** This will produce a high going pulse on output pin **10** of the negative input NAND gate which is fed along line **470** to input pin **9** of positive input NAND gate **473.** Since the system is operating in the run forward direction and speed, the output from pin **10** of the mode register **348** will be high and this signal is fed along line **432** to the second input, input pin **10** of the positive input NAND gate **473.** A low pulse will therefore appear at the output of pin **8** of the positive input NAND gate **473.** That pulse is fed along line **476** to negative input NOR gate **180,** input pin **5,** the output of which on pin **6** is utilized as explained above to clear the search sequence.

If at any time the desired address is located this will produce an output pulse emanating from output pin **6** of the comparator **387** and is fed along lines **478** and **479** to input pin **11** of positive input NOR gate **460** which will, in the same manner as explained immediately above, produce an output pulse on pin **8** to stop and clear the system.

Tape Motion Controls, Search Sequence

As explained above, when a tape motion mode of operation is initiated with the logic circuitry shown in FIG. **3,** it generates an input signal to the tape motion control circuitry shown in FIG. **2** designated "search A," "search B," "search C," plus a "search enable" signal. In addition, tape motion is controlled by the various push button switches described in relation to FIG. **1,** such as the read switch **30,** the read two switch **31,** the record switch **35,** the dup switch **33,** the stop switch **41,** and the like.

The search enable signal generated by the circuitry shown in FIG. **3** is primarily utilized as one of the enabling signals to clear a buffer (not shown) designated a read buffer which stores information which is to be duplicated from one tape deck to the other tape deck or to be typed from one tape deck onto hard copy. The read buffer is cleared any time a sequence or mode of operation is changed so that information remaining in the buffer will not appear at the beginning of the next operation. For example, if one-half of a letter is typed with the automated typing system and the tape is then rewound to begin typing a new letter, information currently stored in the buffer would be cleared so it does not appear on the beginning of the next letter.

Referring now to FIG. **2,** the search enable signal clears the read buffer with a read buffer clear signal emanating from output pin **1** of a positive input NOR gate **503.** This is initiated from the search enable signal which appears as a low going signal on the input line **505** and is fed along line **506** to input pin **12,** of a negative input NAND gate **507.** The second enabling input on input pin **11** originates from either of two alternate action flip-flops **510, 512** indicating that the system is either recording or in a tape write sequence of operation.

As shown in FIG. **2,** the condition of the record flip-flop **510** is fed from pin **2** along lines **513, 514, 515** and **516** to pin **11** of the negative input NAND gate **507** and the condition of the tape write flip-flop **512** is fed from

pin 12 along lines 518, 519, 520, 515 and 516 to the same input pin 11 of the negative input NAND gate 507. The negative input NAND gate 507 is then conditioned to be cleared any time a search enable signal is received. The output of the NAND gate 507 is fed to the input pin 3 of the NOR gate 503 to clear the read buffer.

In addition, certain other operating conditions will initiate a read buffer clear signal through the NOR gate 503. These are all connected to the read buffer clear signal (RBC) with a negative input NOR gate 522, the output of which is fed from output pin 8 along line 523 to the input of the NOR gate 503 to initiate the read buffer clear signal. As an example, when the master clear signal occurs, that signal appears as a low going signal on input line 525, is inverted with inverter 526 and fed along lines 527, 528 to a second inverter 530 which reinverts it to a low going signal, that low going signal is fed along lines 531 and 532 to input pin 12 of the aforementioned negative input NOR gate 522.

A second example would be when an operator stops reading the deck two tape and wishes to rewind it to start at the beginning of the tape or to begin a new tape. In this instance, a "read two" signal will be present and when the operator depresses the rewind two switch 29, a rewind two signal will be present. The read two switch 31 creates a signal on input line 534 while the rewind two switch 29 will initiate a signal on input line 536. The rewind two signal is fed along lines 536 and 537 to input pin 13 of NAND gate 540, the output of which is fed along line 541 to the input pin 13 of the negative input NOR gate 522. Depression of the read two switch creates a high going signal on line 534 which is differentiated as shown in FIG. 2 and inverted with inverter 548, the output of which clocks the read two flip-flop 550 to change its state.

In a similar manner, if the system is reading the first tape deck 24 and the rewind button 28 is depressed for that tape deck, a read buffer clear signal will be generated. This is accomplished as follows. If the read two flip-flop 550 is set to indicate that the system is in the read two sequence of operation, the alternate output taken from output pin 9 indicates that the system is not in read one. similarly, if the read two switch 31 has not been depressed, the read two flip-flop 550 will indicate that it is not in the read two sequence of operation. Consequently, the output from pin 9 indicates that the system is operating in the read one condition or in other words, is reading deck one 24. This signal is fed along lines 555, 556, 557 and 558 to the input pin 10 of NAND gate 560. The second input to the NAND gate 560 is obtained from the rewind one line 563 along line 565. Consequently, if the system is operating from tape deck one and the operator pushes the rewind one button 28, a low going signal will appear on the output pin 8 of that NAND gate 560 and is fed into the input pin 9 of the negative input NOR gate 522, the output of which, as described above, will clear the read buffer.

Finally, simple depression of the read two switch 31 at any time clears the read buffer as it is fed along line 567 to the last input, pin 10, of the negative input NOR gate 522.

As indicated in the prior discussions, the signal designated "search A" is utilized to drive the tape drive in a run forward speed which is a normal speed. The search A signal is conditioned with the use of tape deck designation signals. This is accomplished as follows. The search A signal, which is a low going signal on line 570, is inverted with inverter 572 and is fed to the input pins 12 and 13, of two NAND gates 574, 575, along lines 576, 577 and 578, respectively. One of these NAND gates 574 or 575 will be enabled and the other will not. Pin 13 of NAND gate 574 is enabled in a not read two or read one operating condition. Pin 12 of NAND gate 575 is enabled in the read two operating condition. This is accomplished in the following manner.

As explained above, output pin 9 of the read two flip-flop 550 will yield a low output indicating that the system is not in read two or is in read one. The high output, accordingly, would be read on the output pin 8 of that flip-flop 550. The low output is fed along lines 555, 556 and 580 to the input of a negative input NAND gate 582, input pin 11. The second enabling signal on input pin 12 of that negative input NAND gate 582 is obtained from the tape write flip-flop 512 and the record flip-flop 510 indicating that the operator is neither writing on tape nor recording at the time. These signals are fed from pin 2 of the record flip-flop along lines 513, 514, 515 and 584 to input pin 12 and from the tape write flip-flop 512 from output pin 12, lines 518, 519, 515 and 584 to input pin 12 of the negative input NAND gate 582. This will fully enable the NAND gate causing tape deck two to run forward at a normal speed as will be explained below.

However, if output pin 9 of the read two flip-flop 550 is high, this indicates that the operator desires to read tape 1. This signal is fed along lines 555, 556 and 580 to the negative input NAND gate 582. Since the input is high to input pin 11, a low output will appear on output pin 13, is inverted with inverter 586 and fed along lines 587, 588 and 589 to the input pin 13 of the NAND gate 574. The low output from the NAND gate 574 from pin 11 is fed along line 590 to one of the inputs, pin 4, of negative input NOR gate 592, the output of which is fed along line 594 to the run forward control. In addition, to interlock the tape from one direction to another, that signal is also fed with line 596 to input pin 2 of a NOR gate 597 which prevents or inhibits the rewind control from being activated.

Conversely, if the initial condition exists wherein the read two flip-flop 550 is clocked to indicate that the operator wishes to read tape deck two, a low output appearing on output pin 9 indicating that the system is not in the read one operation will be fed along line 555, 556, 580 to input pin 11 as described above. Since both inputs will now be low to that NAND gate 582, output pin 13 will go high and this is fed along lines 601 and 602 to NAND gate 575, described above, the low output of which on pin 11 is fed through a negative input NOR gate 604 to run the second tape deck forward at a normal slow speed and to again inhibit a rewind of that tape deck with the use of input pin 6 of NOR gate 606.

In the same manner as above, a signal appearing at input line 610, designated search B, causes either tape deck one 24 or tape deck two 25 to run forward at a very fast speed, designated fast forward. Again, the search B input signal is fed to input pins 11 and 9, respectively, of negative input NAND gates 612, 614 and the signal from the read two flip-flop 550 indicating whether the operator is operating deck one or deck two is fed to the input pins 12 and 8 of those NAND gates 612, 614, respectively. The outputs of each NAND

gate are fed along lines **616** and **617**, and **619** and **620**, respectively, to cause the tape motion to run forward in fast forward speed on tape one or tape two. In addition, the signals are fed to the second inputs of the positive input NOR gates **597** and **606** to inhibit a rewind of those tapes while they are traveling in a fast forward direction.

Finally, the search C signal on input line **622** is utilized in the same manner as above to cause the tape to run in a fast reverse mode of operation. As with the other two modes, the low going input is inverted with inverter **624** and is fed to the input of two NAND gates **626** and **628**, the other inputs of which are enabled in one case and disabled in the other case by the read two or not read two signal generated by the read flip-flop **550**. The outputs of each are fed to negative input NOR gates **631, 632** to cause the tape deck to move in a fast reverse direction. The second inputs to the negative input NOR gates **631, 632** are tied to the rewind one and rewind two enable circuitry along lines **563, 536,** through inverters **634** for rewind one and **635** for rewind two so that if the operator depresses a rewind switch **28** or **29** to create the enables, the tape decks will automatically go to a rewind mode of operation unless the inhibit rewind signals are present as described above.

Tape Motion Controls, Standard Sequences

In addition to the tape motion which is controlled electronically during the search procedure, the operator of the system can also control motion of the tape with the push buttons indicated in FIG. **1**. For example, the system only records on deck one, **24**. In normal operation if that deck is going to be duplicated, after information is recorded on deck one, **24**, the tape is removed from deck one, **24**, and inserted in deck two, **25**, and a new tape is inserted into deck one. Recording then takes place in the deck one station. Consequently, if the record switch **35** has been depressed it automatically moves deck one. This is accomplished primarily with the read two flip-flop **550** and the overriding record flip-flop **510**. The output of the read two flip-flop **550**, pin **9**, is fed along lines **555, 556** and **580** to input pin **11** of a NOR gate **582**. The output, pin **6**, of the record flip-flop **510** is fed along lines **514, 515** and **584** to input pin **12** of the NOR gate **582**. Both of these inputs must be low before a high output will appear on pin **13** of the NOR gate **582** which is necessary in order to go into the run forward two mode of operation. As described above, the output of the NOR gate **582** is fed along lines **601, 602**, NAND gate **575**, negative input NOR gate **604** to output line **605** to cause tape deck two to move at a run forward speed. All other conditions of the input of NOR gate **582** create a partial enable for the deck one circuitry as described above to move it at the run forward speed.

In addition, other logical gating energizes lights (not shown) on the switchboard indicating in which mode of operation the system is operating. For example, the output of pin **9** from the read two flip-flop **550** is fed along lines **555, 640** and **642** to inverter **644**, the output of which, pin **8**, energizes a read two light in push button **31** shown in FIG. **1**.

Other operator selected modes of operation are the rewind controls on input lines **503, 536**. These enable signals are fed directly through the logical gating shown in FIG. **2** to the tape motion controls. For example, rewind one is fed along line **563** through inverter **634** along lines **648, 649** and **650** to input pin **5** of negative input NOR gate **631** to the fast reverse one output line **633**. The rewind two input signal is fed along lines **536**, 652, 653 through inverter **635**, line **654** to input pin **5** of negative input NOR gate **632** to the fast reverse two control on line **634**. As explained earlier, under certain conditions a rewind or fast reverse will not occur due to the inhibit rewind signals connected to a power supply board not shown. Therefore, if an operator is running in a fast forward or slow forward speed, depression of either rewind switch **28** or **29** will be ignored unless a stop condition is initiated.

A read switch **30** is provided, the input signal from which is fed along lines **660** and **662** to two negative input NAND gates **664, 665** and a NOR gate **667**. The second enable of which is originated from the read two flip-flop **550** discussed earlier. The output of the read two flip-flop **550** on pin **9** is fed along lines **555, 640** and **670** to negative input pin **6** of the first negative input NAND gate **664**. If read two is enabled, the output pin **4** of NAND gate **664** will go high and is fed through NOR gate **667** to initiate the read sequence in the search circuitry discussed earlier. The other negative input NAND gate **665** is fully enabled when the outputs of the record flip-flop pin **2** and tape write flip-flop pin **12** indicate that the system is not in the record sequence of operation.

A write enable or record signal is entered from the input keyboard, switch **35** shown in FIG. **1**, into the tape motion control board on input line **670**. A debouce capacitor **C16** is provided along with a differentiator comprising **C15** and **R10, R12**. That signal is fed along lines **671, 672** through inverter **674** to the input of the record flip-flop **510**, input pin **3**. As with the read two flip-flop **550** the record flip-flop **510** is also an alternate action flip-flop. Output pin **5** is utilized with inverter **676** to energize the record light on the keyboard, switch **35**.

A file protect input to the tape motion control board is on line **678**. This comprises a small tab on the bottom of the tape cassette utilized in deck one. If the tab has been broken out this is detected with a sensor (not shown) to produce a signal on the file protect input so that any record signal will be ignored. This is accomplished with the use of inverter **681**, the output of pin **12** of which is fed along line **682** to negative input NOR gate **690**, pin **9**. The output of NOR gate **690** is inverted with inverter **692** and utilized to inhibit the record flip-flop **510** at input pin **4** thereof.

To duplicate information from deck two onto the tape in deck one, the only recording deck, a dup switch **33** is provided shown in FIG. **1**, the input of which on line **696** sets a dup flip-flop **698**. This automatically puts the system in the record sequence of operation. This is accomplished from output pin **5** of the dup flop **698** which is connected along lines **701** and **702** to input pin **1** of the record flip-flop **510**, which sets that flip-flop **510** to automatically put the system in record. In addition, output pin **5** is also connected along lines **701, 702** and **703** to input pin **13** of the read two flip-flop **550** which automatically sets that flop to read deck two. Consequently, duplication occurs only in one direction; from deck two to deck one wherein deck one is the recording deck.

As shown in FIG. **1**, a stop switch **41** is provided which provides an emergency stop for the operator.

That signal is initiated on input line **705** of the system and is fed connected to input pin **3** of the negative input NOR gate **707** and along line **708** through NOR gate **710**, line **711** to the tape write flip-flop **512**, pin **13**. It is also fed along lines **705**, **713**, **714**, negative input NOR gate **716**, line **718**, NOR gate **720**, line **722** to the input of the read tape flip-flop **725**.

As described below the stop switch **41** signal is also used to inhibit a forward positioner flip-flop **728**, and to clear the visual indicator counter **75**. The forward positioner flip-flop **728** is utilized in a backup/forward sequence to be discussed below.

To inhibit the forward positioner flip-flop **728** the signal is fed along lines **705**, **713**, **733** to negative input NOR gate **735**, input pin **10**, NOR gate **737**, along line **740** to the forward positioner flip-flop **728**. This signal is also fed to negative input NOR gate **742**, the output of which is differentiated with C24, R17 and R18, that pulse being fed along line **744** to negative input NOR gate **746**, input pin **1**, to clear the visual counter **75**.

The signal designated BOT record on input line **750** is a high going signal on input line **750** of the system. This occurs on the clear leader portion of a tape. That high signal is connected along lines **752** and **753** to input pin **12** of a NAND gate **755**. When the record enable has been energized as explained above, pin **13** will also be high. Thus, output pin **11** will go low. This is fed along lines **757** and **759** to input pin **13** of a negative input NOR gate **761** and along line **763** through inverter **764** and along line **766** to negative input NOR gate **592**, line **594** to run the tape forward at a normal recording speed. When the tape has moved past the clear leader, the BOT signal line **750** goes low. Consequently, output pin **11** of the NAND gate **755** goes high which initiates the beginning of the tape record timer **770** at pin **10**. The timer has a duration of approximately 40 milliseconds and during that period of time the output on pin **12** is also fed along line **772** to the input of negative input NOR gate **761** which, through the circuitry traced above, continues tape motion for the duration of the time or for about 40 milliseconds. This is to assure that the first line is not written on the clear leader of the tape.

When the circuitry initiates a command which indicates that a tape is going to be written, that will produce a signal at the start tape write input, input line **774**. That signal is inverted with inverter **776**, the output of which clocks the tape write flip-flop **512**. In addition, input pin **12** of the tape write flip-flop **512** is high, that input being connected to the record flip-flop **510**. Consequently, when the tape write flip-flop **512** is clocked output pin **8** will go low. This output is connected with line **778** to negative input NOR gate **761**, pin **1**, the third input to the negative input NOR gate **761** discussed above, to move the tape in the run forward direction. The tape will continue to move until either the stop switch **41** is depressed for an emergency stop or a stop write signal from the control circuitry appears on input line **780**. This input is also fed along line **780** to input pins **4** and **5** of the negative input NOR gate **707** along line **708** to input pin **8** of the NOR gate **710** and along line **711** of the tape write flip-flop **512**. The third terminating signal is the master clear signal on input line **525** which is inverted with inverter **526** and fed along lines **527** and **782** to input pin **9** of the NOR gate **710** and along line **711** to the tape write flip-flop **512**.

In a similar manner, logical circuitry to control tape motion is initiated when a read enable signal is activated. That signal appears on system input line **784** and is fed to input pin **5** of a negative input NAND gate **786** which is fed along lines **787** and **788** to the read tape flip-flop **725**, input pin **3**. The negative input NAND gate **786** is a disabling gate. This is accomplished through input pin **6** which is connected along line **790** to the output of a NAND gate **792**. The inputs to that NAND gate **792** are connected with lines **794** and **795** to the rewind input signals on input lines **563** and **536**, respectively. The input to pin **9** of that NAND gate **792** is connected along lines **795** and **694** through inverter **634** to input line **563** and input pin **10** of NAND gate **792** is connected with lines **794**, **636**, inverter **635**, lines **653**, **652** and **636** to the rewind two signal. Consequently, if the system is not rewinding either the first tape deck or the second tape deck, both of those signals will be high, the output consequently will be low which will provide the second enable to the read tape flip-flop **725**.

As explained above, three conditions will inhibit reading tape, each of which are connected to input pin **1** of the read tape flip-flop **725**. Master clear which is fed through the inverter **526** along lines **782**, **797**, through NOR gate **720**, along line **722** to input **1** and the stop switch, which is fed along lines **705**, **713** and **714** to input pin **2** of negative input NOR gate line **716** to input pin **3** of NOR gate **720**, the output of which is connected with line **722** to input pin **1**.

Assuming that neither of those conditions exist when the read tape flip-flop **725** is clocked, output pin **5** will go high and is connected with line **799** to input pins **5** and **10** of NAND gates **803**, **804**, respectively. The second enabling inputs to those NAND gates **803** and **804** are connected to the read two flip-flop **550** indicating that the system has been conditioned to operate either in deck one or deck two. As explained above, if the system is reading deck two, pin **12** of the read two flip-flop **550** is high and this is connected with lines **805** and **552** to input pin **4** of NAND gate **803**. Alternatively, if output pin **9** of the read two flip-flop **550** is high indicating that the system is not in read two, or is reading deck one, this high output is connected with lines **555**, **556** and **557** to input pin **9** of NAND gate **804**. The output of NAND gate **803**, output pin **6**, is connected with line **806** to negative input NOR gate **604** to run deck two in the forward direction. Similarly, the output of NAND gate **804**, output pin **8**, is connected with line **807** to input pin **5** of negative input NOR gate **592** which is connected to the run forward control for the deck one capstan.

Two occurrences can stop the system from reading tape. The normal occurrence is on the EOL signal on system input line **808** which indicates that a recognition code at the end of a block of data such as the end of a line has been reached and that is all that is desired from that portion of the tape. The second occurrence is rarely utilized. It originates in a read buffer counter (not shown) designated RB200. This counter counts the characters taken off the tape and if it counts up to 200 characters it stops the tape read in that the read buffer (not shown) only contains room for **200** characters. Each of these signals are fed along lines **808** and **810**, respectively, to input pins **1** and **13** of a negative input NOR gate **716**, which is fed along line **718** to NOR gate **720**, the output of which on pin **1** is fed along

line **722** to the inhibit input of the read tape flip-flop **725**, pin **1**. As explained above, that will stop tape motion by causing output pin **5** to go low, thus removing the enable from NAND gates **803** and **804**. These are the normal controls for reading the tape in a forward direction.

Remote enable is an interlock command which is fed to the dup flip-flop **698** which resets at the end of information preselected by the operator, such as word, line or paragraph, the end of the dup sequence of operation. The operator makes the selection with switches **37** through **40** shown on FIG. **1**, designated word **37**, line **38**, paragraph **39** or page **40**. When the end of the selected block of information is reached, the signal on line **812**, the remote enable input, will go high which will clock the dup flip-flop **698** to terminate the duping operation. As with the other flip-flops discussed additional signals to disable the dup flip-flop **698** are depression of rewind one or rewind two switches **28**, **29**, a master clear, or the file protect input on line **678** as discussed above. These stopping signals are connected from their originating point as follows.

The rewind two signal is connected with line **536**, 652, 814 to input pin **2** of a NOR gate **816**. The master clear signal is inverted with inverter **526** and reinverted with inverter **530** and fed along lines **531**, **817** and **818** to input **10** of the negative input NOR gate **690**. The rewind one signal is fed along line **563**, inverted with inverter **634**, and fed with lines **648** and **820** to input pin **11** of negative input NOR gate **690**. The file protect switch is inverted with inverter **681** and connected with line **682** to input pin **9** of negative input NOR gate **690**. The output, output pin **8**, of that negative input NOR gate **690** is connected with lines **822** and **823** to the other input, input pin **3**, of NOR gate **816**. The output of NOR gate **816** is fed with line **818** to the inhibit input, input pin **4**, of the dup flip-flop **698**. The aforementioned is basically the tape motion control for all tape motion other than line backup.

Line Backup Sequence

The system also has a block of logical circuitry which permits an operator of the system to go back and correct a previously typed block of data in which the operator has made a mistake. In each instance that a block of data or "record" is to be typed, it is initiated with a start tape write signal. As explained previously, this creates a predetermined length of tape which is caused by the 90 millisecond delay from the tape write timer to allow the capstan to get up to speed. This gap on the tape, referred to as preamble, contains a written signal of 4.8 kilocycles prior to the record to synchronize the clock. At the end of any block of information, there is a gap on the tape. This is created by the stop tape write input. At the point that the stop tape write signal stops the tape, a negative flux is created in the recording head which is an erase current. Naturally the tape takes a certain amount of time to stop due to the time it takes the solenoid to deenergize to stop the tape capstans. This creates approximately a 4/10 inch blank negative flux tape with no data. This is referred to as the "basic interrecord gap." The total interrecord gap is from the point that the tape goes blank to where a recognition code appears after the preamble. However, the full extent of no data on the tape occurs only during the period between the initiation of the stop tape write signal and the time the tape actually stops moving.

By using data on the tape in conjunction with the basic interrecord gap the system is designed so that the operator can back up to where an error was created and then go forward. This occurs one record at a time. Two input keys are utilized for this procedure, the margin release switch and the backup/forward switch. These two signals are connected to the circuitry shown in FIG. **2** on system input lines **820**, **822**, respectively. Only the backup/forward switch is utilized to go back records and the backup/forward switch in conjunction with the margin release switch will allow the system to move forward one record at a time. To move the tape back one record at a time, the backup/forward switch is depressed. The backup/forward signal is a high going signal while the margin release signal is a low going signal.

The backup/forward signal is fed to input pin **10** of a NAND gate **825**, the other input to which is the normally high margin release signal. Consequently, the low going output of the NAND gate **825** sets a backup flag **732** along lines **827** and **828** to input pin **1** thereof. It disables the write enable to the amplifier. This is accomplished with a DC set/reset flip-flop constructed of two negative input NOR gates **742** and **830**. The low going output from NAND gate **825** is fed along lines **827** and **832** to input pin **13** of the first negative input NOR gate **830** which disables the amplifier write enable along lines **834**, **835** to NOR gate **837**, the low output of which is fed to input pin **13** of a NAND gate **840** leading to the amplifier write enable. The other input to that NAND gate **840** is the original write enable signal. By disabling the amplifier write enable this assures that when the tape is moving in the reverse direction it will not be erased.

When the backup flag **732** is DC set, the output on pin **6** will be high and the output on pin **5** will be low. The low output from pin **5** is fed along lines **839** and **841** to negative input NAND gate **843**, input pin **12**. Input pin **11** of NAND gate **843** is also low because a second record flip-flop **845** has been cleared. Consequently, the output on pin **13** will go high to run the tape in the reverse direction.

The second record flip-flop **845** is cleared upon initiation of the backup/forward signal on line **822**. Prior to the DC set of the backup flag **732**, output pin **6** would be low. This is fed along lines **848** and **849** to the input of NOR gate **851**, input pin **6**. Input pin **5** to that NOR gate **851** originates at output pin **9** of the forward positioner flip-flop **728** which is not enabled until the margin release switch is depressed which will be explained below. Consequently, the output of pin **9** thereof is fed along lines **853** and **854** to input pin **5** of NOR gate **851**. Since both inputs are low, the output on pin **4** will be high enabling the NAND gate **858**. Depression of the backup/forward switch therefore sends a second high going signal along lines **822** and **861** to input pin **5** of the NAND gate causing a low output on pin **6** which is fed along lines **863** and **864** to clear the second record flip-flop **845**. The low output on that flip-flop **845** assures that the tape runs in the reverse direction. Data from the tape is fed into the system on system input line **866**. This is the data from deck one in that the backup/forward feature is to be operated from the first deck **24** in the console **22**. The low going data signal is inverted with inverter **868** and is utilized to enable a data continuity timer **870**. It is a reset, retriggerable timer which is provided to prevent the system from

operating on isolated noise pulses. When it first triggers, the output on pin **13** goes high which sets a block timer **873.** The duration of the block timer **873** is substantially larger than the short duration data continuity timer **870.**

If only a noise pulse is registered on the tape the high signal from inverter **868** will set the data continuity timer **870,** output pin **13** will go high which will set the block timer **873** through input pin **10,** output pin **5** will go high. When the timer **873** times out, output pin **11** will go low, partially enabling negative input NAND gate **875.** However, since no more data appears on the tape, the output of inverter **868** will be low. Therefore, the data continuity timer **870** will have a low output on **13** and a high output on **4.** Output pin **4** is connected along lines **877, 878** and **879** to input pin **12** of negative input NAND gate **875** disabling that gate. Therefore, a first block flip-flop **880** will not be set thereby indicating that a first block of data was not read.

On the other hand, if a continuous stream of data is being read on system input line **866** the output of inverter **868,** output pin **6,** will remain high and the data continuity timer **870** output, pin **4,** will remain low. This indicates that a block of data is being read. The low output being fed to input pin **12** of the negative input NAND gate **875** will cause output pin **13** to go high which will enable the first block flip-flop **880** on input pin **2** thereof. The next data will set the first block flip-flop **880** from inverter **868** along lines **869, 871** to input pin **3** of the first block flip-flop **880.** This indicates that a first block of data is being read.

When the first block flip-flop **880** is set, output pin **5** will go high and output pin **6** will go low. The low output on pin **6** is fed to input pin **11** of a negative input NAND gate **883.** The second input to that negative input NAND gate **883,** input pin **12,** originates fromn output pin **12** of the block timer **873.** After the block timer **873** times out indicating that data was read, it will not be initiated again until after the data has gone away, after the interrecord gap has been passed, and until another block of data appears on input line **866,** again initiating the data continuity timer **870** and the block timer **873.** At that time output pin **5** will go high and output pin **12** of the block timer **870** will go low fully enabling negative input NAND gate **883** on pin **13** to enable the interrecord gap flip-flop **885** on pin **12** thereof. The interrecord flip-flop **885** is clocked in the same manner as the first block flip-flop **880** discussed above with data input. When the interrecord flip-flop **885** has been set, that indicates that the interrecord gap has been passed. Output pin **9** of the interrecord gap flip-flop **885** will go high and is fed with line **887** to input pin **5** of a NAND gate **890.**

When the block timer **873** times out again output pin **5** of the block timer **873** will go low partially enabling negative input NAND gate **875** and if data is continually being read from the data input **866** the data continuity timer **870** will be set yielding a low output on output pin **4,** this being fed along lines **877, 878, 879** to input pin **12** of the negative input NAND gate **875** creating a high output on pin **13** thereof. This high output is fed along lines **892** and **893** to the second input, input pin **4,** of the NAND gate **890.** This will create a low output on pin **6** thereof which is utilized to enable the second record flip-flop **845** which is clocked in the same manner as the first block flip-flop **880** indicating the system is monitoring the second record in reverse.

At this point the tape has passed one record backward and is beginning to enter a second block of data. At this point the system is set to pause and stop the run reverse. When the second record flip-flop **845** is set output pin **8** goes high and output pin **9** goes low. The high output from output pin **8** of the second record flip-flop **845** is fed along lines **895** and **896** to disable negative input NAND gate **843.** When that negative input NAND gate **843** is disabled, the tape no longer runs in a reverse direction. The low output from output pin **9** is inverted with an inverter **898** and creates the second high signal to initiate a direction change timer **901** of approximately **140** milliseconds. When that timer **901** times out the trailing edge of the high signal on pin **13** is differentiated with **C25, R21** and **R22** to create a low going pulse which is fed along line **903** to negative input NOR gate **905,** the high output of which on pin **3** is connected with line **906** to inverter **908** to create a low signal on output pin **12** of the inverter **908** which is connected with line **909** to the forward positioner flip-flop **782.** When that flip-flop **782** is set output pin **9** goes high and output pin **8** goes low. The low output from pin **8** being fed along line **911** to input pin **1** of the negative input NOR gate **592** connected to the run forward control to start the tape in a forward direction. The high output on pin **9** is connected with line **912** to the NOR gate **853** to continue to inhibit the write enable amplifier so that nothing is erased on the tape and, in addition, is fed with line **854** to NOR gate **851,** the output of which is connected to NAND gate **858** which is utilized to inhibit the second record, interrecord gap, and the first block flip-flops **845, 885** and **880,** respectively, until such time as the system is in use again.

As mentioned earlier, the tape can move forward with the backup/ forward circuitry in two instances, one of which, as explained above, is when the system has moved backward one record. The second situation, as explained earlier, is when both the backup/forward key and the margin release key are depressed signifying that the operator wants to move only in the forward direction. This is accomplished as follows.

When the margin release key and the backup/forward key are both depressed simultaneously, the low going signal on the margin release key is connected with lines **820** and **914** to input pin **9** of NAND gate **825.** The high signal from the backup/forward is also connected to input pin **10** of that NAND gate **825.** However, the low going signal disables that NAND gate **825** and thus the high output will not set the backup flag **732.** The high output from the backup/forward is also connected with lines **916** and **917** to input pin **4** of NAND gate **922** while the low going signal from the margin release key is inverted with inverter **919** and connected with line **920** to input pin **5** of that NAND gate **922.**

The low going output on pin **6** thereof is connected with line **924** of the negative input NOR gate **905** mentioned earlier. As indicated, the high going output on pin **3** thereof is connected to input pin **10** of the forward positioner flip-flop **728** to set the forward positioner flip-flop **728** in the manner discussed above. Consequently, whether or not the system has been utilized to back up one record the initial conditions for the forward motion are identical and the sequence proceeds in the same manner.

As indicated earlier pin **9** of the forward positioner flip-flop **728** is connected through NOR gate **837** and

NAND gate **840** to assure that when moving forward, the amplifier write enable is deenergized and therefore no information on the tape will be erased. Also, as indicated earlier at the termination of the backup phase the reading head was reading a second block of data. Since data is present the data continuity timer **870** will be set and output pin **4** will be low and will remain low until the data has passed. That low output is connected with lines **877, 878, 926** to input pin **11** of the forward positioner flip-flop **728.** Immediately upon the termination of the data that output will go high which will clock the forward positioner flip-flop **728** causing output pin **8** to go high, thus terminating the run forward signal and the tape capstan will coast to a stop in the same manner as if the operator were recording on the tape. Consequently, the tape will be positioned at approximately the same point as where the record begins so that the information or error can be corrected on the tape.

Pin **8** of the forward positioner flip-flop **728** going high also is connected along line **928** to clock the backup/forward flag **732** so that the system is in precisely the condition it was prior to initiating the backup/forward sequence of operation with the exception of the amplifier write enable on line **729.** The set/reset flop comprised of the negative input NOR gates **742, 830** has not been cleared so that no noise will be recorded on the tape when it is moving either in the rearward or forward direction. The flip-flop **742, 830** will be cleared in the event the stop switch **41** is depressed, the record switch **35** is depressed or if another similar sequence is initiated. This is accomplished in the following manner.

Both the start tape write signal and the stop switch signal **705** are connected to negative input NOR gate **735.** The start tape write signal being connected along lines **774** and **930** to input pin **11** and the stop switch being connected along lines **705, 713** and **733** to input pin **10** of the NOR gate **735.** In addition, the record enable from pin **6** of the record flip-flop **510** is connected to the third negative input of the negative input NOR gate **735** along lines **514, 520, 933** to input pin **9.** If either of these events occur, the high output is fed through NOR gate **735** along line **935** to clear the inhibit through input pin **9** of the negative input NOR gate **742** comprising half of write enable flip-flop.

In this manner the system is returned to normal start up conditions and may be reinitiated by depression of the margin release and backup/forward switches.

In general, while we have described a specific embodiment of our invention, it is to be understood that this is for purposes of illustration only and that many various modifications can be made within the scope of the invention. For example, designation of the tape decks as deck one and deck two is one of choice only. Also, either or both decks may be operated in any of the modes or sequences described with appropriate modification. It should also be obvious that each digit of an address number may be recorded on tape and decoded in accordance with the teachings of our specification and that all such modifications are within the intendment of our invention.

We claim as our invention:

1. In an automated typing system of the type having information storage means for storing information to be typed comprising magnetic tape and tape drive means;

recording means for recording information on the information storage means; and

typing means for reproducing all or selected portions of the information stored on the information storage means;

the improvement comprising

means for registering address numbers of one or more digits to be recorded on the information storage means which designate the specific location of information to be typed by the typing means from the information storage means; and

means for converting each address number contained in the registering means to a plurality of pulses to be recorded by the recording means on the information storage means which are at least a multiple of the corresponding address number whereby when the pulses are recorded on the tape by the recording means the converted address numbers are readable in either direction of tape drive and extraneous noise pulses do not provide a false indication of recorded information.

2. The improvement of claim **1** wherein the plurality of pulses for each address number is greater than a multiple of the corresponding address number.

3. The improvement of claim **2** wherein the plurality of pulses is equal to eight times the address number plus four additional pulses.

4. The improvement of claim **1** wherein each address number contains one or more digits and wherein the converting means converts each digit to a plurality of pulses which is at least a multiple of the corresponding digit.

5. The improvement of claim **1** wherein the plurality of pulses is recorded on the information storage means with the recording means and further comprising reading means for reading the plurality of pulses from the tape and decoding means for converting the plurality of pulses into the address number originally contained in the registering means.

6. The improvement of claim **5** wherein an address to be located is entered into the registering means and further comprising comparative means for comparing the address number in the registering means and the address number in the decoding means to determine whether or not they are equivalent.

7. The improvement of claim **6** wherein the tape drive means control the direction and speed of tape drive and wherein the tape drive means can be controlled to stop the tape precisely at the address location equivalent to the address contained in the registering means.

8. The improvement of claim **6** further comprising mode control means electrically connected to the tape drive means, the reading means and the comparative means for controlling the tape drive means wherein if the comparative means indicates that the number read from the tape is not equivalent to the number entered into the registering means, the tape will be driven inn the reverse direction and addresses will be read and compared in the reverse direction.

9. The improvement of claim **8** wherein if the address is read in the reverse direction and it is equivalent to the number in the registering means, the mode control means operates to drive the tape in the forward direction at a slow speed to position the tape precisely at the address location equivalent to the address in the registering means.

10. The improvement of claim **8** wherein if the address to be located is not read in the reverse direction, the mode control means operates to stop the tape at the next preceding address location.

11. In an automated typing system of the type having

information storing means for storing information to be typed comprising magnetic tape;

recording means for recording information to be typed on the information storage means wherein information is stored in blocks of information; and

typing means for reproducing stored information on tape;

the improvement comprising

means for moving the tape one of the blocks of information at a time without additional coding on the tape of any kind.

12. The improvement of claim **11** wherein the means for moving the tape moves the tape backwards one block of information at a time.

13. The improvement of claim **11** wherein the means for moving the tape moves the tape forward one block of information at a time.

14. The improvement of claim **11** wherein the means for moving the tape moves the tape in either direction one block of information at a time.

* * * * *