United States Patent [19]

Spence et al.

BEST AVAILABLE COPY

[11] **3,915,278**

[45] **Oct. 28, 1975**

[54] **RIGHT HAND MARGIN ADJUSTMENT FEATURE FOR AN AUTOMATED TYPING SYSTEM**

[75] Inventors: **Gary W. Spence**, Loretto; **James L. Wienhold; Larry E. Kveberg**, both of Minneapolis, all of Minn.

[73] Assignee: **CPT Corporation**, Hopkins, Minn.

[22] Filed: **Mar. 21, 1974**

[21] Appl. No.: **453,363**

[52] **U.S. Cl.** **197/19**; 340/172.5

[51] **Int. Cl.**[2] **B41J 5/30**

[58] **Field of Search** ..... 95/4.5; 197/19, 20, 84 A; 340/172.5, 174.1; 235/61.9, 167

[56] **References Cited**

UNITED STATES PATENTS

3,260,340	7/1966	Locklar et al.	197/19
3,297,124	1/1967	Sims	197/19
3,439,341	4/1969	Dolby et al.	340/172.5
3,490,004	1/1970	Ross	340/172.5
3,579,193	5/1971	Bernier	340/172.5
3,674,125	7/1972	Kolpek	340/174.1 RX
3,757,921	9/1973	Bishop	197/84 AX
3,837,459	9/1974	Martin	197/19

Primary Examiner—Clifford D. Crowder
Assistant Examiner—R. T. Rader
Attorney, Agent, or Firm—Dorsey, Marquart, Windhorst, West and Halladay

[57] **ABSTRACT**

A right hand margin adjust feature for an automated typing system for use with cassette tapes and other typing or display systems. This feature enables an automatic typing system of the class described to automatically reformat pre-recorded information according to changed margin settings of a typewriter or printing device or to compensate for words inserted or deleted in previously recorded copy. It is responsive to, and functions to edit, sentence ending punctuation, spaces, tab, hyphens, carrier returns and line returns. Carrier returns and spaces will be added or deleted automatically as dictated by their position in the original copy and by the margin settings. Carrier returns in the original material are deleted and replaced by an appropriate number of spaces until a variable character right hand margin adjust zone is reached. The feature functions at the beginning of the right hand margin zone to analyze and evaluate the remaining characters in the line. The last available interword space in the zone is deleted and replaced with a carrier return if possible. If a word extends through and beyond the variable right hand margin adjust zone, the system will stop, permitting the typist to read by character to the proper position for a hyphen. After the hyphen is typed and the carrier returned the system will continue to read and type in the automatic right hand margin adjust mode. The system will also stop for any previously recorded tab, permitting the typist to insert the tab if it is required or continue to read. Carrier returns at the end of a title, salutations, or a short line, and tabs and hyphens that will always be required may be kept by depressing a "keep" key at the same time as the appropriate character key and thereafter will not be edited by the right hand margin adjust feature.

20 Claims, 16 Drawing Figures

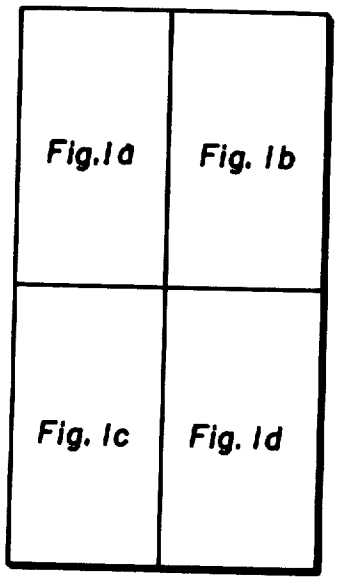

Fig. 2

Fig.2a	Fig.2b	Fig.2c
Fig.2d	Fig.2e	Fig.2f

Fig. 1

Fig.1a	Fig. 1b
Fig. 1c	Fig. 1d

Fig. 3

Fig.3a	Fig.3b
Fig.3c	Fig.3d
Fig.3e	Fig.3f

Fig. 1a

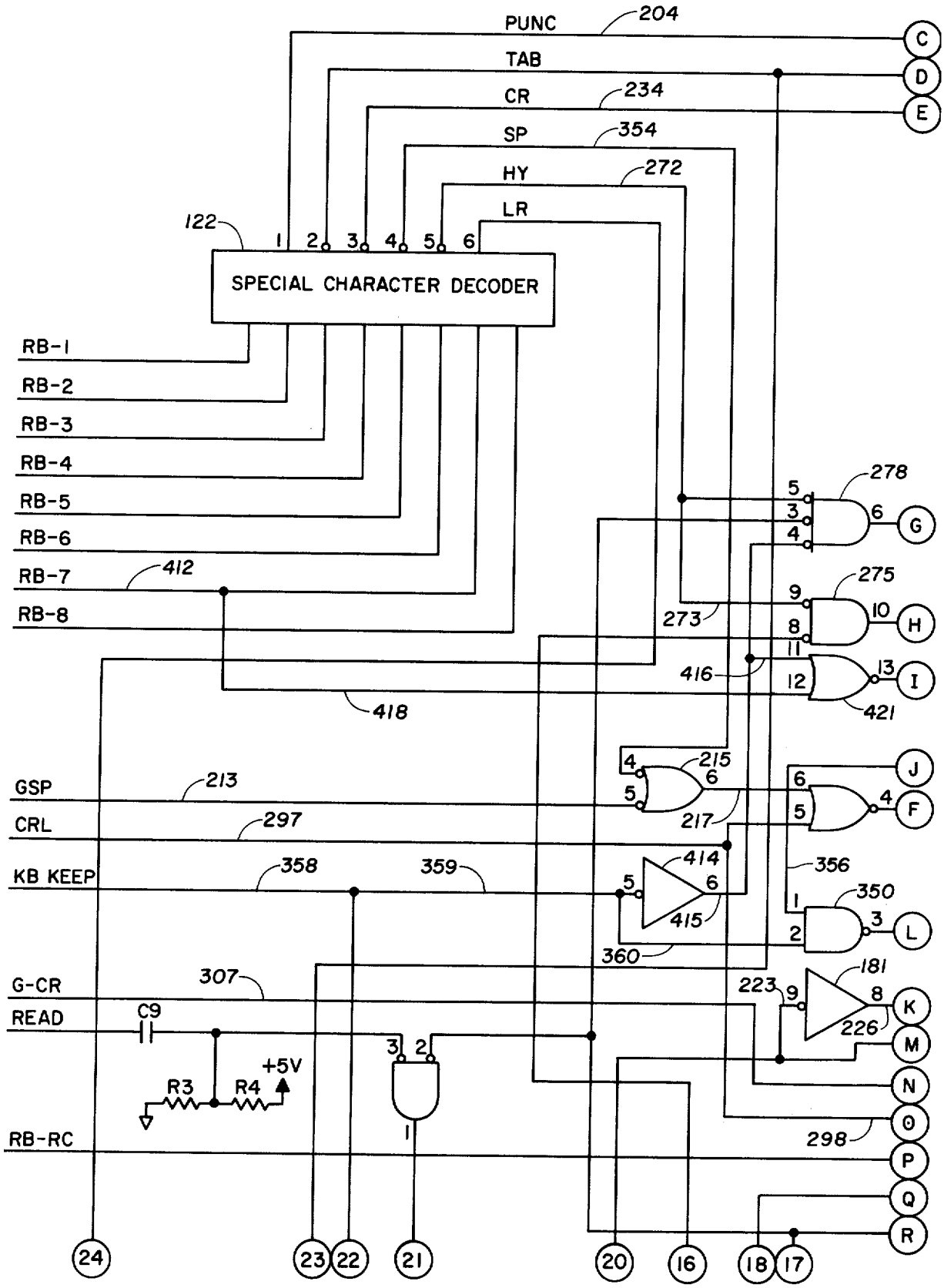
PUNC
204
TAB
CR
234
SP
354
HY
272
LR
122
SPECIAL CHARACTER DECODER
RB-1
RB-2
RB-3
RB-4
RB-5
RB-6
RB-7
412
RB-8
278
275
273
416
421
418
215
217
GSP
213
CRL
297
KB KEEP
358
359
414
415
356
350
360
G-CR
307
181
223
226
READ
C9
+5V
R3
R4
298
RB-RC
C
D
E
G
H
I
J
F
L
K
M
N
O
P
Q
R
24
23
22
21
20
16
18
17

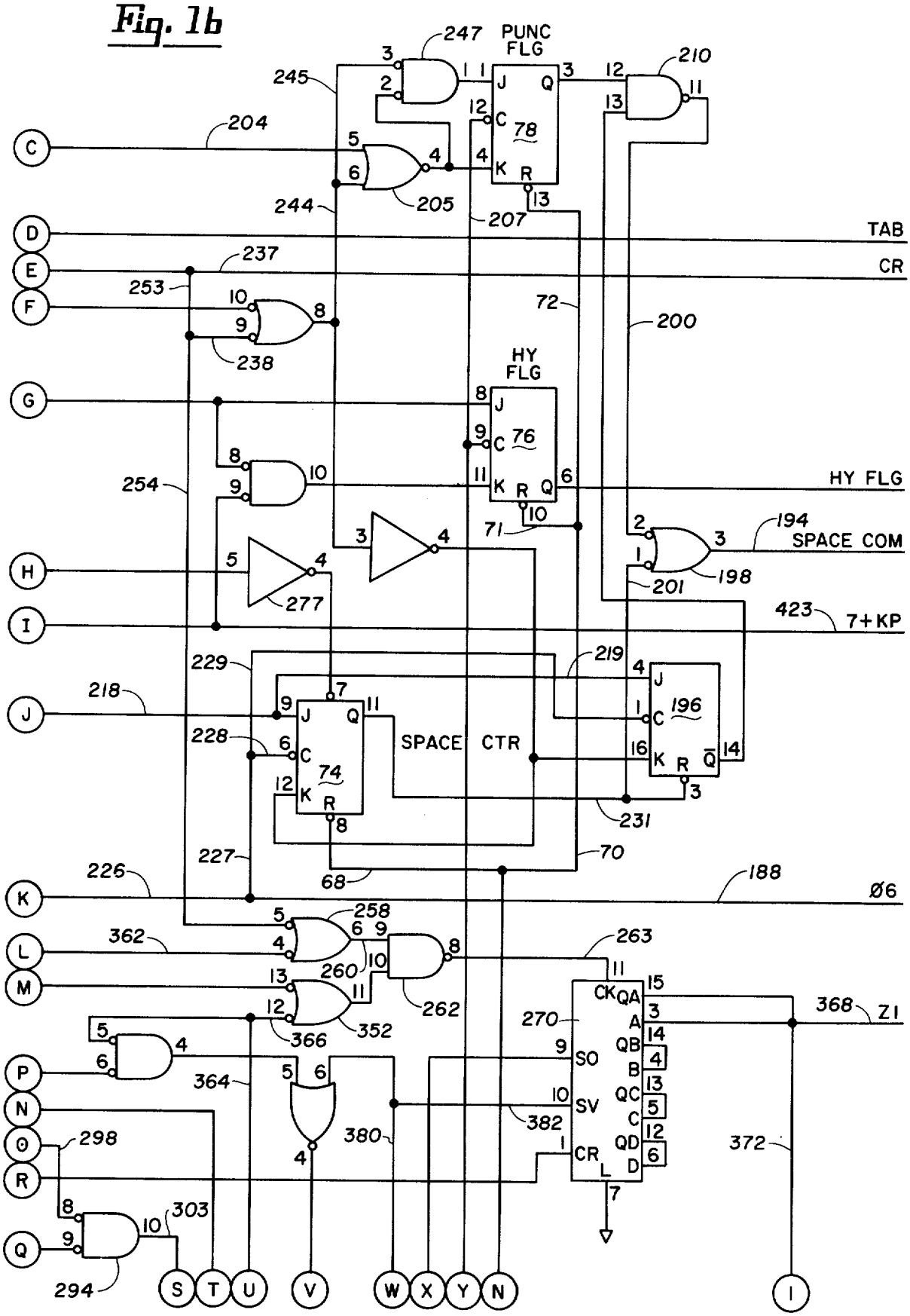
Fig. 1b
PUNC FLG
HY FLG
SPACE CTR
TAB
CR
HY FLG
SPACE COM
7+KP
Ø6
ZI
C
D
E
F
G
H
I
J
K
L
M
P
N
O
R
Q
S
T
U
V
W
X
Y
N
I

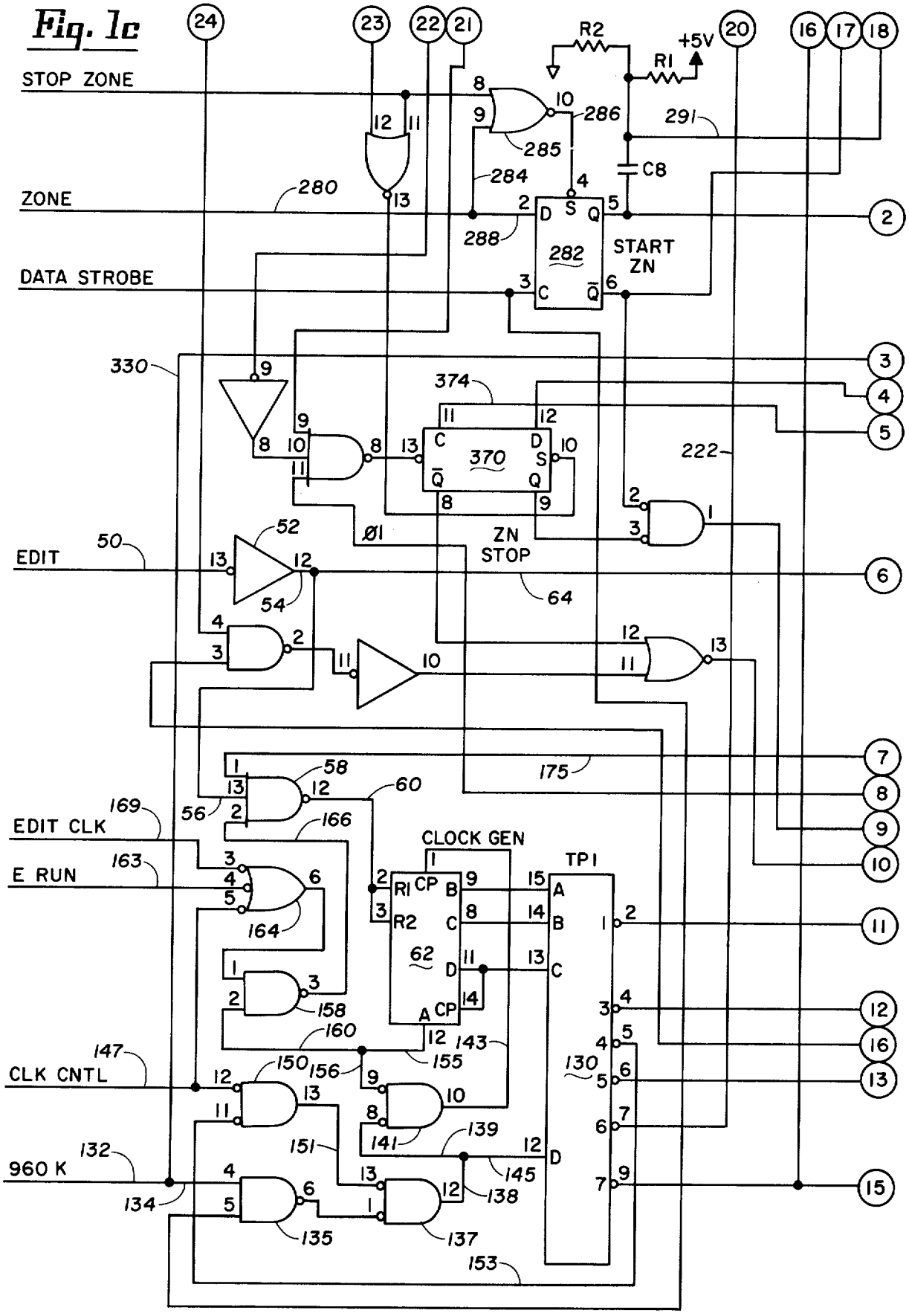
Fig. 1c
STOP ZONE
ZONE
DATA STROBE
EDIT
EDIT CLK
E RUN
CLK CNTL
960 K
R2
R1
+5V
C8
START ZN
ZN STOP
CLOCK GEN
TP1
282
370
62
130
24
23
22
21
20
16
17
18
2
3
4
5
6
7
8
9
10
11
12
13
15

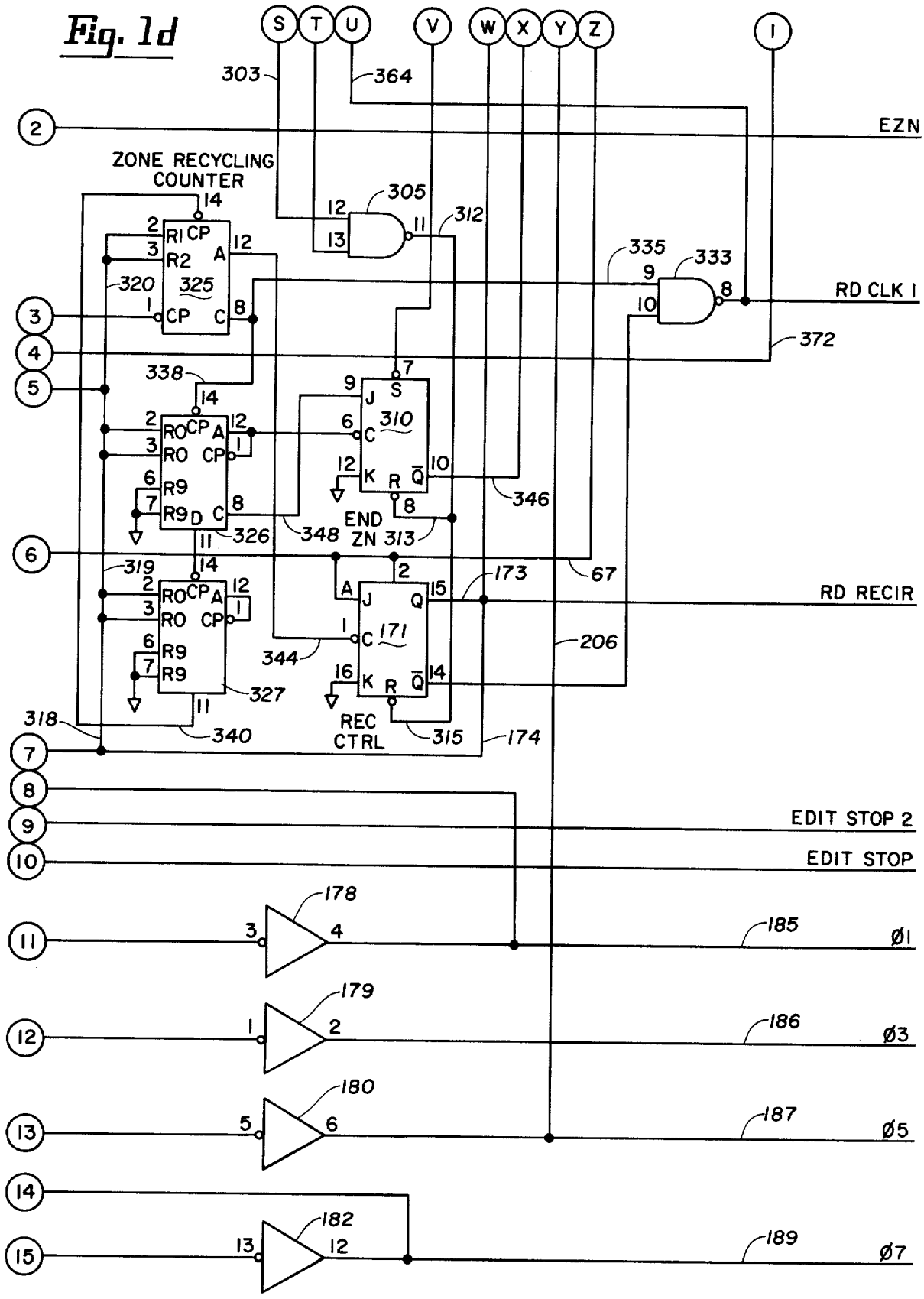
Fig. 1d
S
T
U
V
W
X
Y
Z
I
EZN
ZONE RECYCLING COUNTER
RD CLK I
RD RECIR
END ZN
REC CTRL
EDIT STOP 2
EDIT STOP
Ø1
Ø3
Ø5
Ø7

Fig. 2a

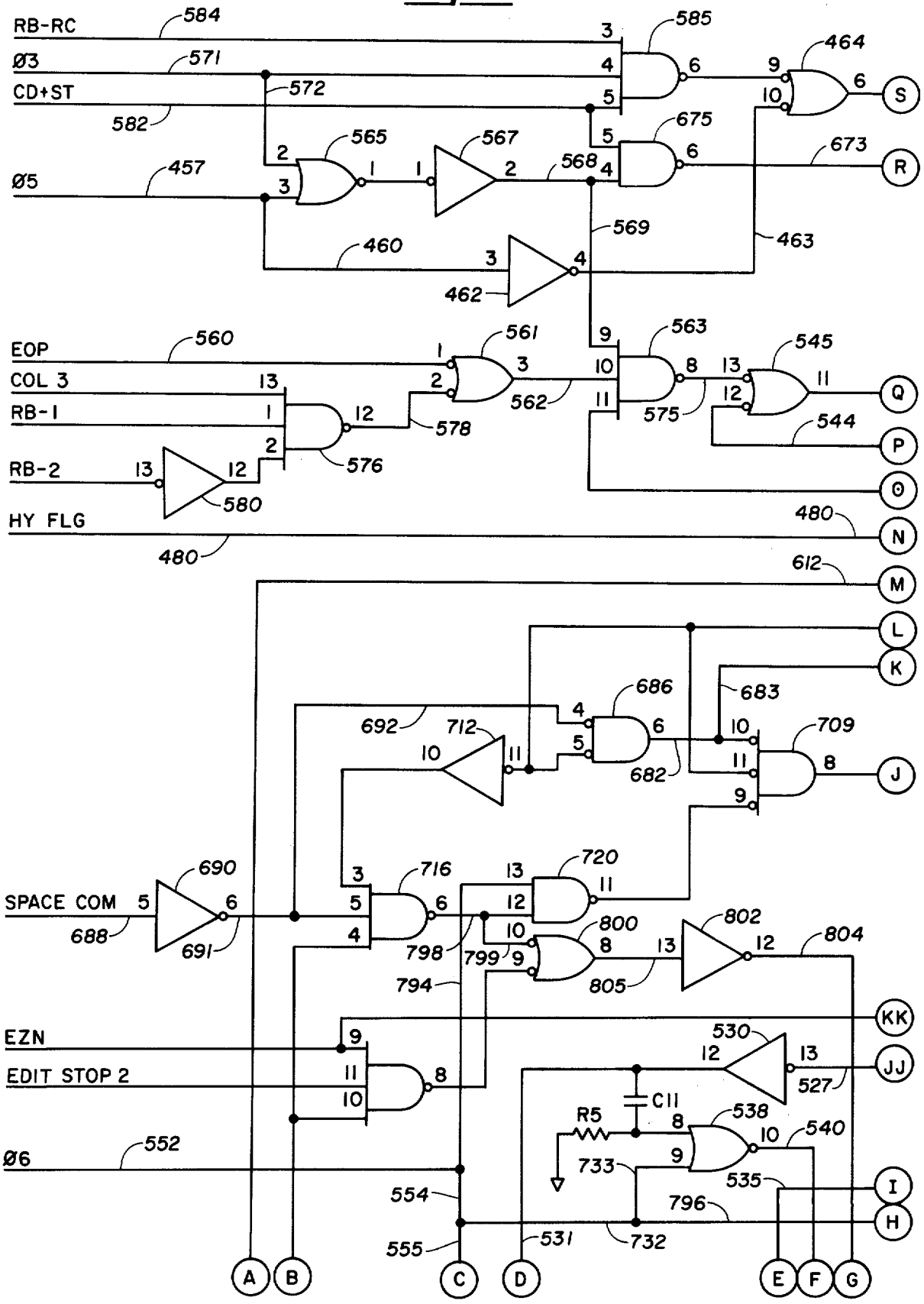
RB-RC
584
585
464
Ø3
571
CD+ST
572
582
565
567
675
673
Ø5
457
568
569
460
463
462
EOP
560
561
563
545
COL 3
562
575
544
RB-1
578
576
RB-2
580
HY FLG
480
612
686
683
692
712
709
682
690
716
720
SPACE COM
688
691
798
799
800
802
804
794
805
EZN
530
EDIT STOP 2
527
C11
R5
538
540
Ø6
552
733
535
554
796
555
531
732
S
R
Q
P
O
N
M
L
K
J
KK
JJ
I
H
A
B
C
D
E
F
G

Fig.2b

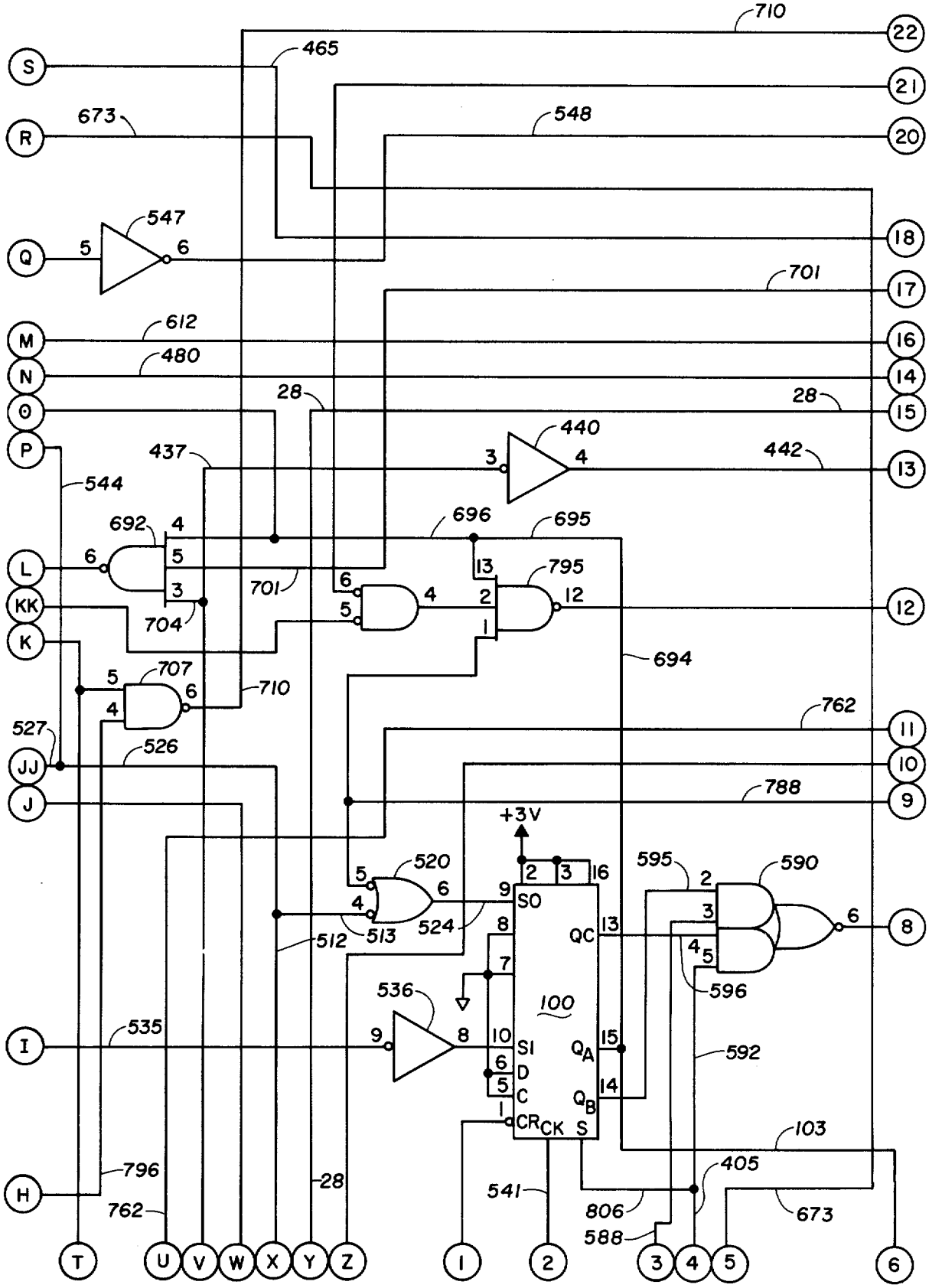
710
465
673
548
547
612
480
28
437
440
442
544
692
696
695
795
701
704
694
707
710
762
527
526
788
+3V
520
513
524
512
595
590
596
536
535
100
592
796
762
541
806
588
405
103
673
S
R
Q
M
N
O
P
L
KK
K
JJ
J
I
H
T
U
V
W
X
Y
Z
1
2
3
4
5
6
8
9
10
11
12
13
14
15
16
17
18
20
21
22

Fig.2c

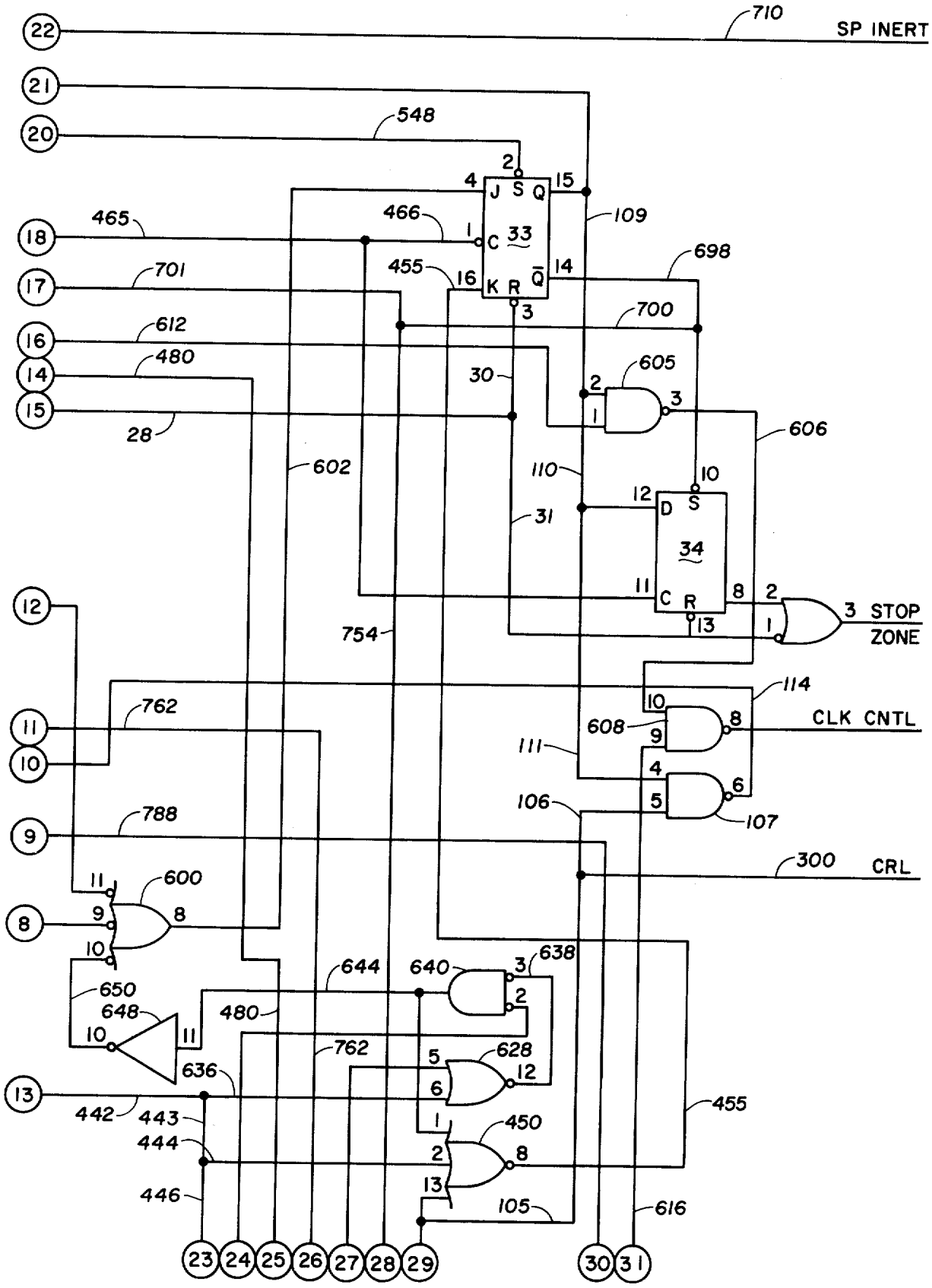
SP INERT
STOP ZONE
CLK CNTL
CRL
J S Q
C 33
K R Q̄
D S
34
C R
710
548
465
466
109
698
701
455
700
612
480
605
30
606
28
602
110
31
754
762
114
608
111
106
107
788
300
600
644
640
638
650
648
480
628
636
762
450
442
443
444
446
455
105
616

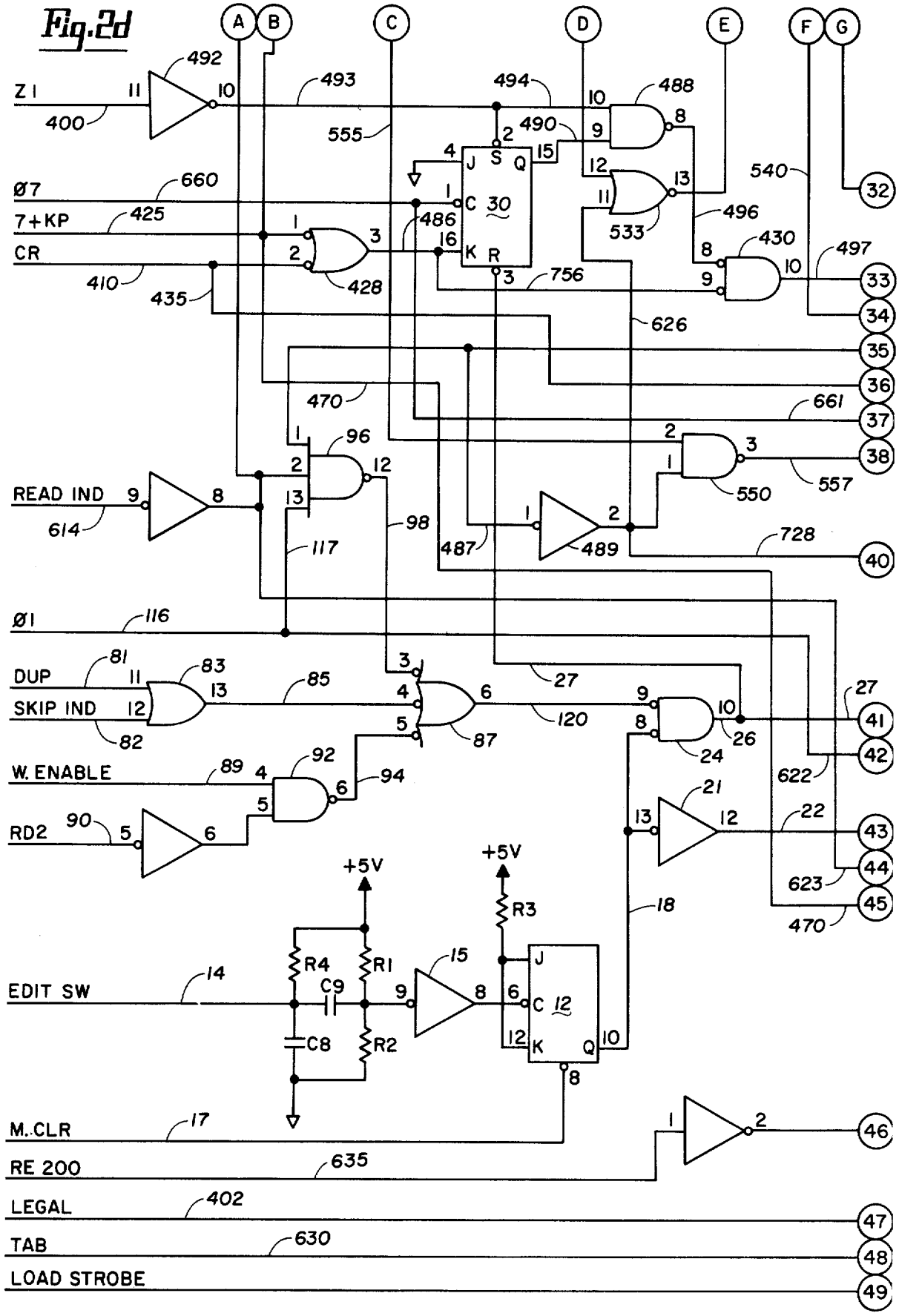
Fig.2d
A
B
C
D
E
F
G
Z1
400
492
493
494
488
490
555
Ø7
660
7+KP
425
CR
410
435
428
486
30
J
S
Q
C
K
R
533
496
540
430
497
756
626
470
661
96
98
READ IND
614
117
487
489
550
557
728
Ø1
116
DUP
81
SKIP IND
82
83
85
87
120
27
26
24
W. ENABLE
89
92
94
RD2
90
21
22
622
623
+5V
R3
18
R4
R1
C9
C8
R2
15
EDIT SW
14
12
M.CLR
17
RE 200
635
LEGAL
402
TAB
630
LOAD STROBE
32
33
34
35
36
37
38
40
41
42
43
44
45
46
47
48
49

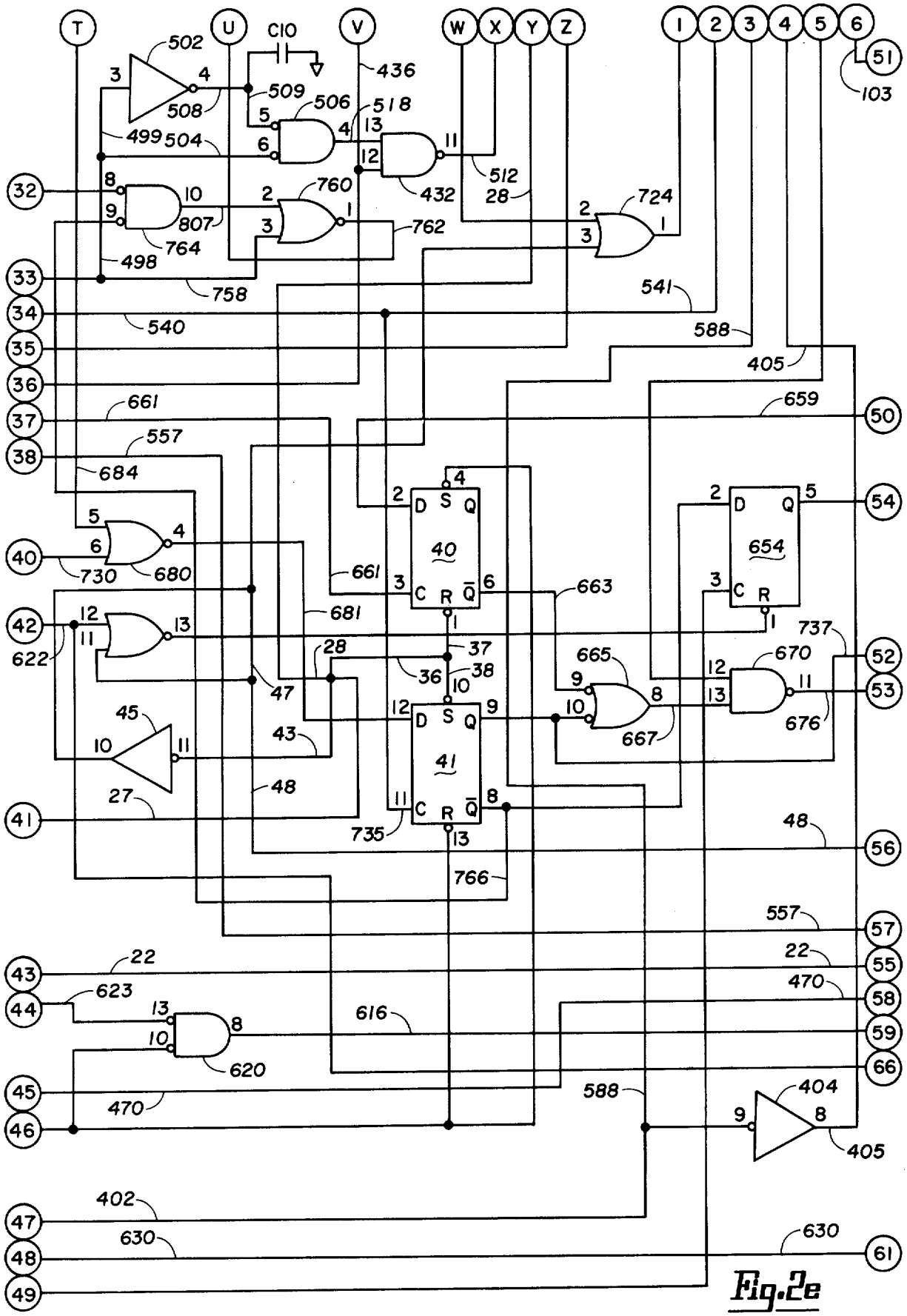
T
U
C10
V
W
X
Y
Z
1
2
3
4
5
6
502
436
509
506
518
508
499
504
432
512
28
760
724
807
764
762
498
758
541
540
588
405
661
659
557
684
40
654
730
680
663
681
622
737
665
670
667
676
41
735
766
616
620
404
470
402
630

Fig.2e

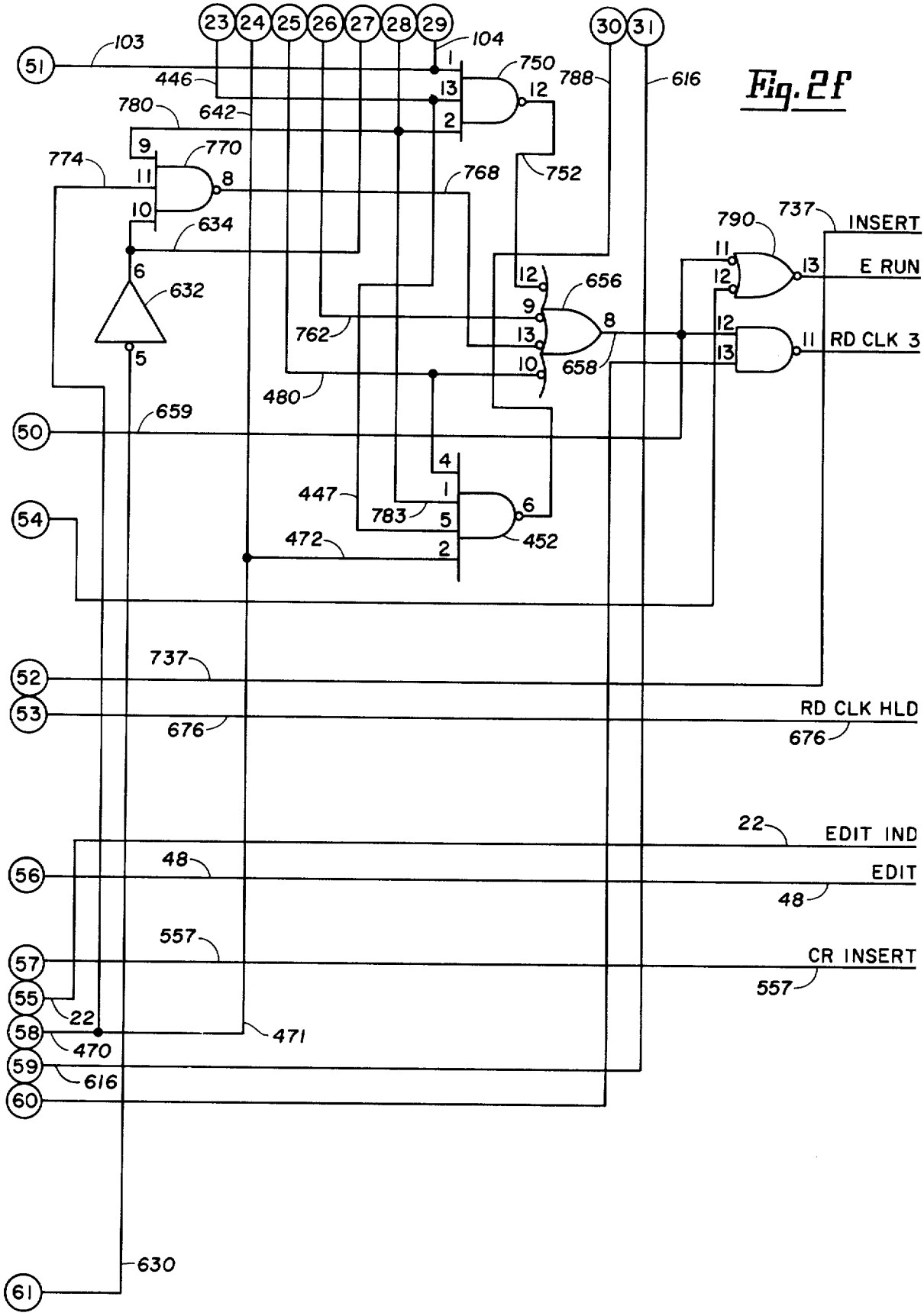
Fig. 2f
INSERT
E RUN
RD CLK 3
RD CLK HLD
EDIT IND
EDIT
CR INSERT

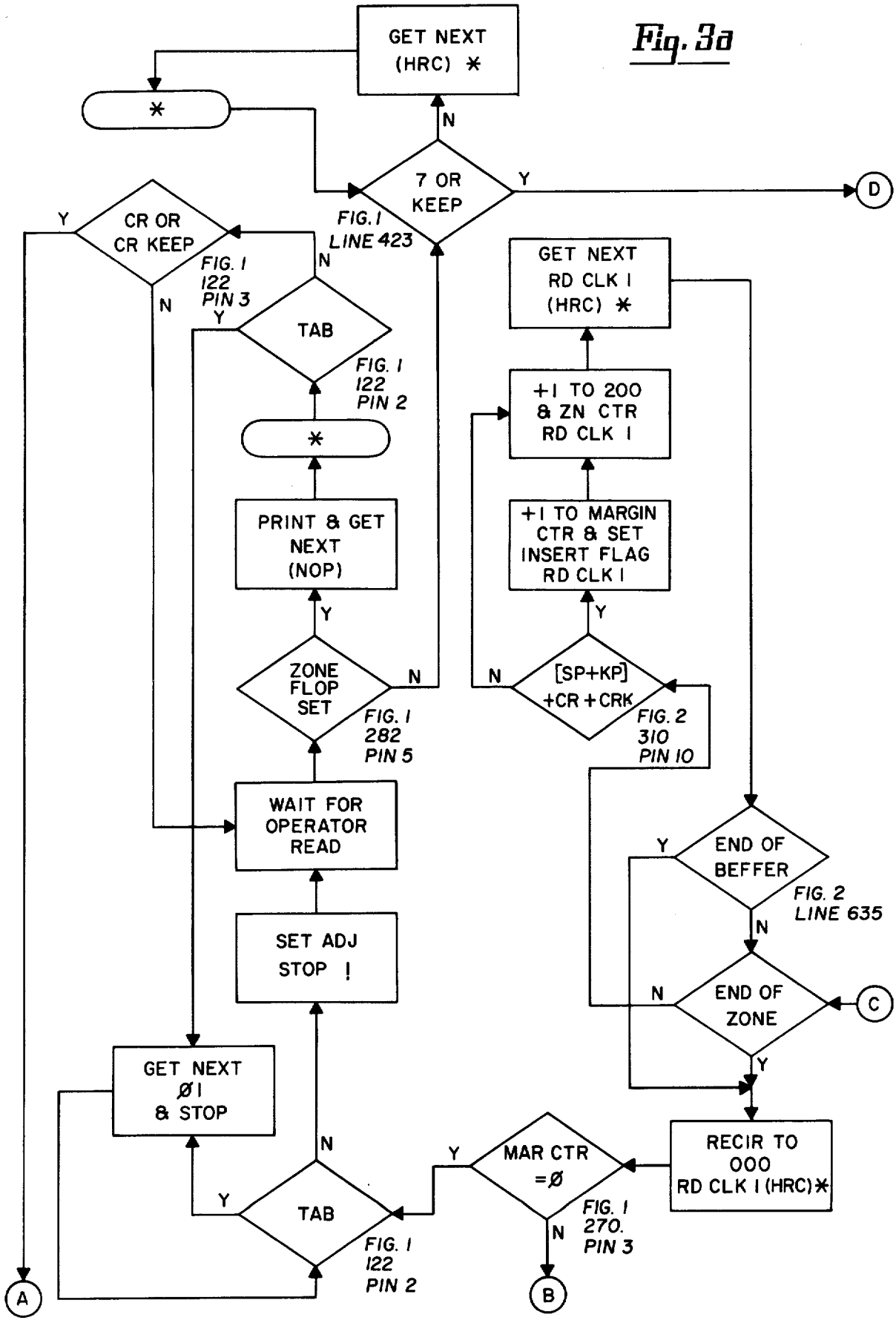
Fig. 3a
GET NEXT (HRC) *
*
7 OR KEEP
FIG. 1 LINE 423
N
Y
D
CR OR CR KEEP
FIG. 1 122 PIN 3
TAB
FIG. 1 122 PIN 2
*
PRINT & GET NEXT (NOP)
ZONE FLOP SET
FIG. 1 282 PIN 5
WAIT FOR OPERATOR READ
SET ADJ STOP !
GET NEXT RD CLK I (HRC) *
+1 TO 200 & ZN CTR RD CLK I
+1 TO MARGIN CTR & SET INSERT FLAG RD CLK I
[SP+KP] +CR+CRK
FIG. 2 310 PIN 10
END OF BEFFER
FIG. 2 LINE 635
END OF ZONE
C
RECIR TO 000 RD CLK I (HRC)*
MAR CTR =Ø
FIG. 1 270. PIN 3
GET NEXT Ø1 & STOP
TAB
FIG. 1 122 PIN 2
A
B

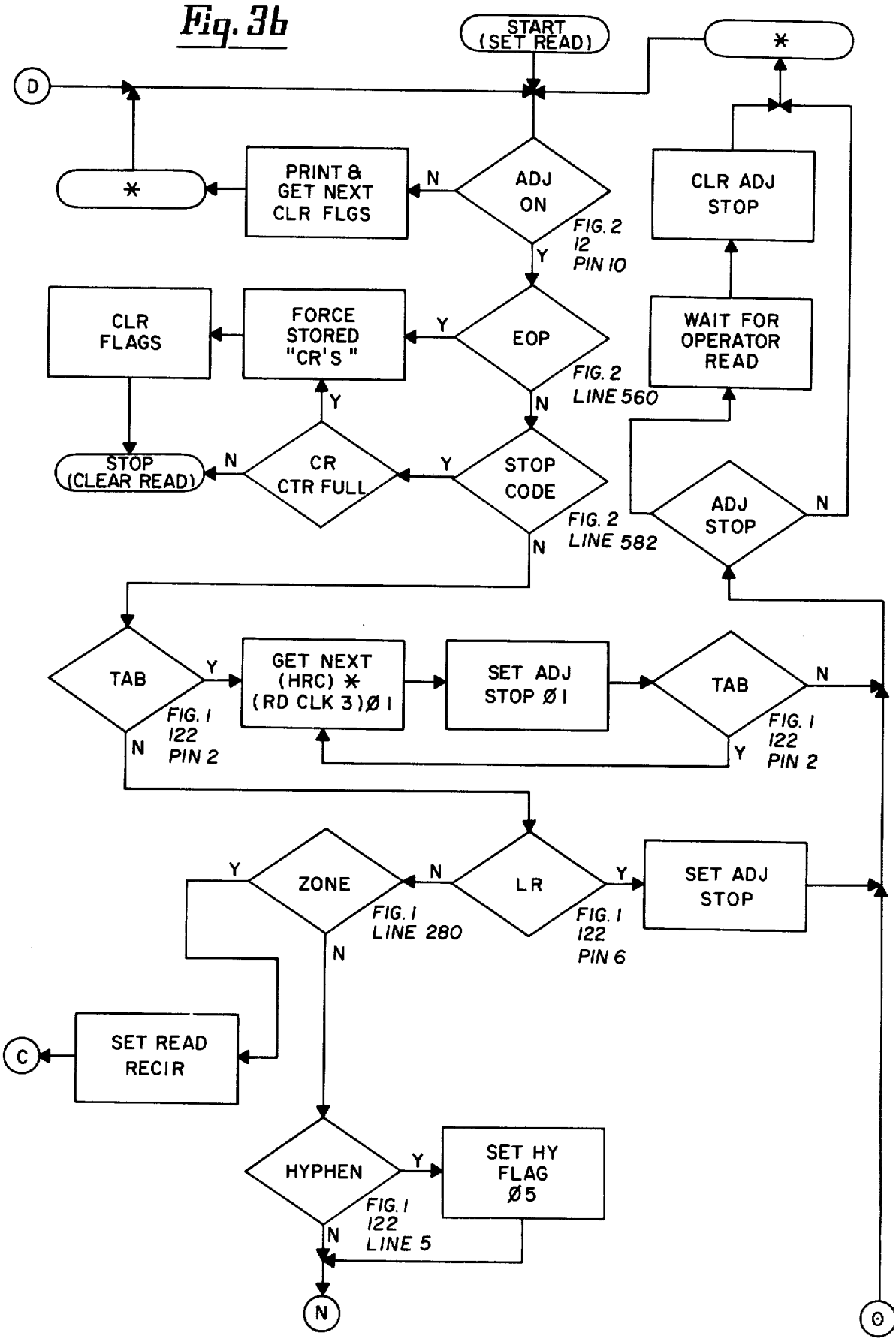
Fig. 3b
START (SET READ)
*
D
*
PRINT & GET NEXT CLR FLGS
N
ADJ ON
FIG. 2 12 PIN 10
Y
CLR ADJ STOP
CLR FLAGS
FORCE STORED "CR'S"
Y
EOP
FIG. 2 LINE 560
N
WAIT FOR OPERATOR READ
Y
STOP (CLEAR READ)
N
CR CTR FULL
Y
STOP CODE
FIG. 2 LINE 582
N
ADJ STOP
N
TAB
Y
GET NEXT (HRC) * (RD CLK 3)Ø1
SET ADJ STOP Ø1
TAB
N
FIG. 1 122 PIN 2
N
Y
FIG. 1 122 PIN 2
Y
ZONE
N
LR
Y
SET ADJ STOP
FIG. 1 LINE 280
FIG. 1 122 PIN 6
N
C
SET READ RECIR
HYPHEN
Y
SET HY FLAG Ø5
FIG. 1 122 LINE 5
N
N
O

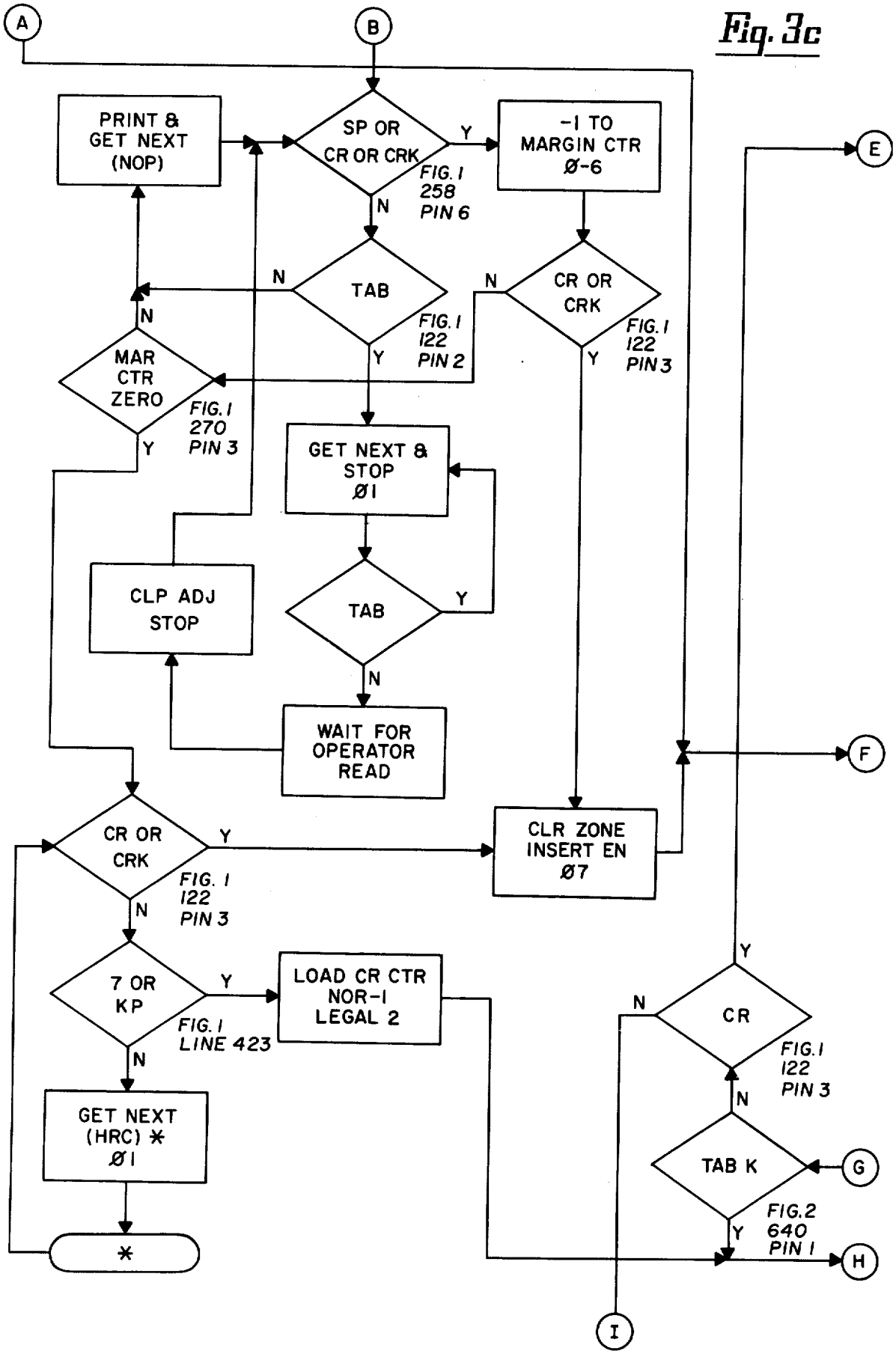
Fig. 3c
A
B
PRINT & GET NEXT (NOP)
SP OR CR OR CRK
FIG. 1 258 PIN 6
Y
N
-1 TO MARGIN CTR Ø-6
E
TAB
FIG. 1 122 PIN 2
CR OR CRK
FIG. 1 122 PIN 3
MAR CTR ZERO
FIG. 1 270 PIN 3
GET NEXT & STOP Ø1
CLP ADJ STOP
TAB
WAIT FOR OPERATOR READ
F
CR OR CRK
FIG. 1 122 PIN 3
CLR ZONE INSERT EN Ø7
7 OR KP
FIG. 1 LINE 423
LOAD CR CTR NOR-1 LEGAL 2
CR
FIG. 1 122 PIN 3
GET NEXT (HRC) * Ø1
TAB K
G
FIG. 2 640 PIN 1
H
*
I

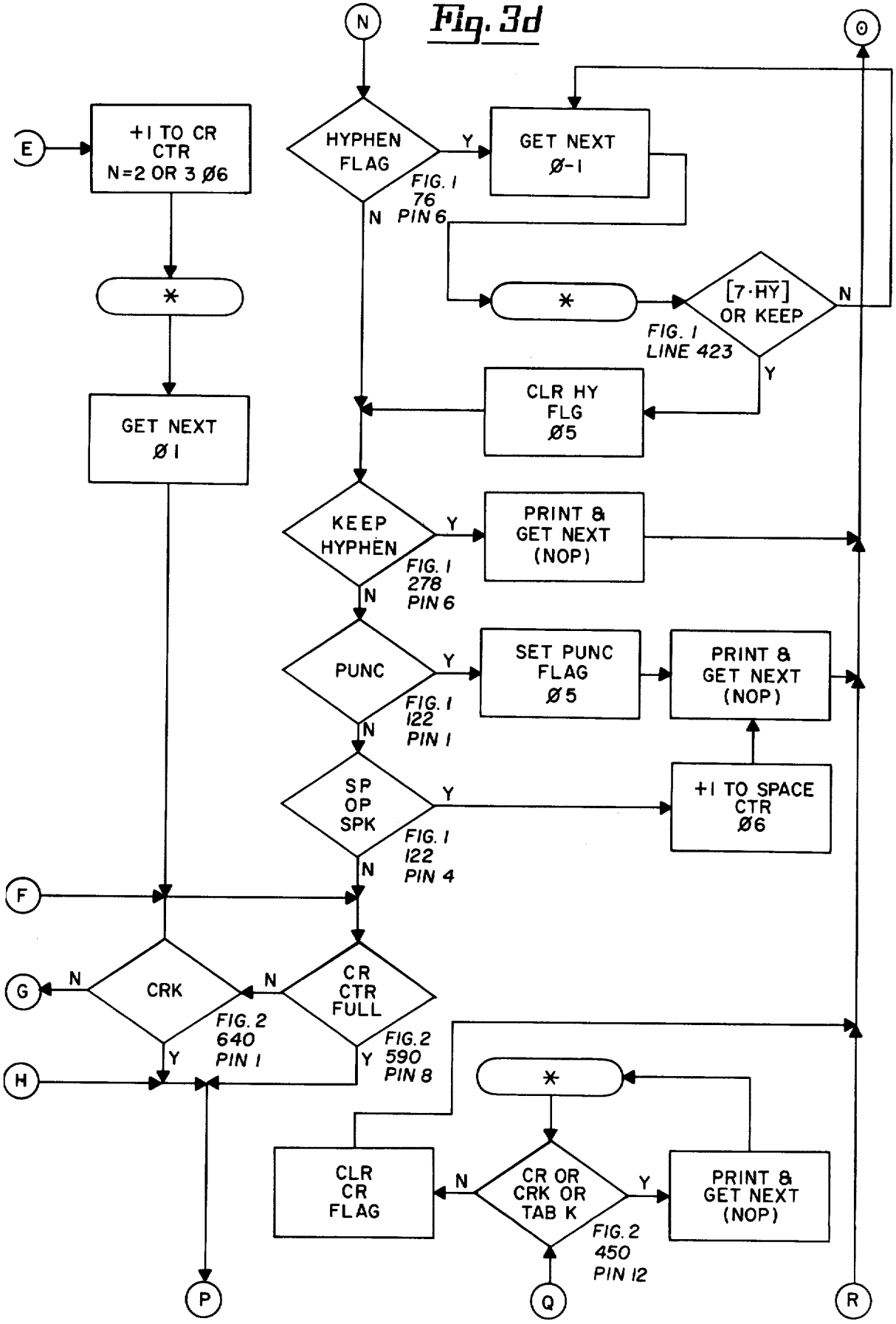
Fig. 3d
N
O
E
+1 TO CR CTR N=2 OR 3 Ø6
HYPHEN FLAG
FIG. 1 76 PIN 6
Y
N
GET NEXT Ø-1
*
[7·HY] OR KEEP
FIG. 1 LINE 423
N
Y
CLR HY FLG Ø5
GET NEXT Ø1
KEEP HYPHEN
FIG. 1 278 PIN 6
PRINT & GET NEXT (NOP)
PUNC
FIG. 1 122 PIN 1
SET PUNC FLAG Ø5
PRINT & GET NEXT (NOP)
SP OP SPK
FIG. 1 122 PIN 4
+1 TO SPACE CTR Ø6
F
G
H
CRK
FIG. 2 640 PIN 1
CR CTR FULL
FIG. 2 590 PIN 8
CLR CR FLAG
CR OR CRK OR TAB K
FIG. 2 450 PIN 12
PRINT & GET NEXT (NOP)
P
Q
R

Fig. 3e

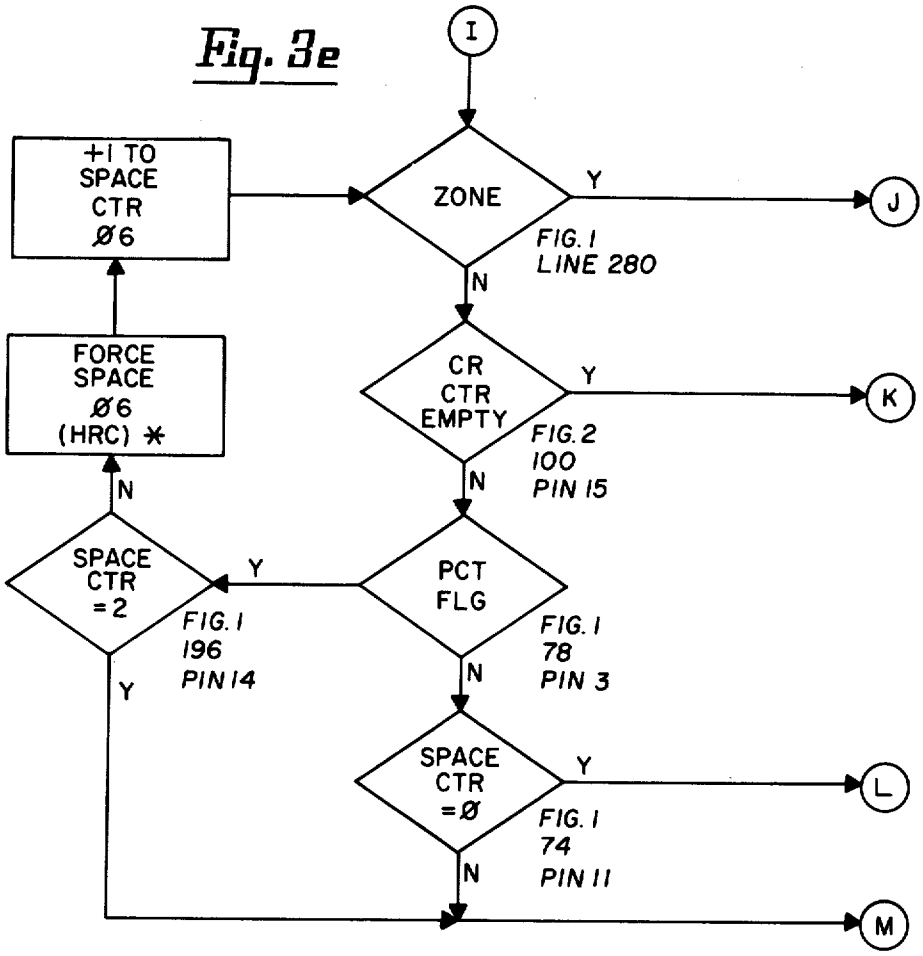

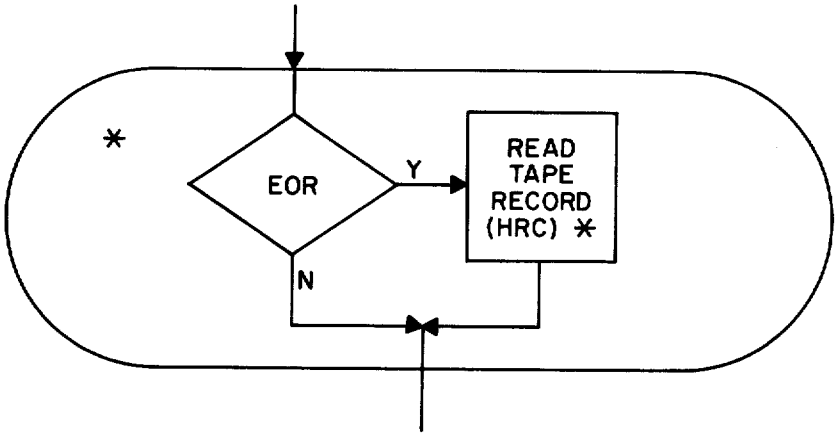

* (HRC) HOLD READ CLOCK

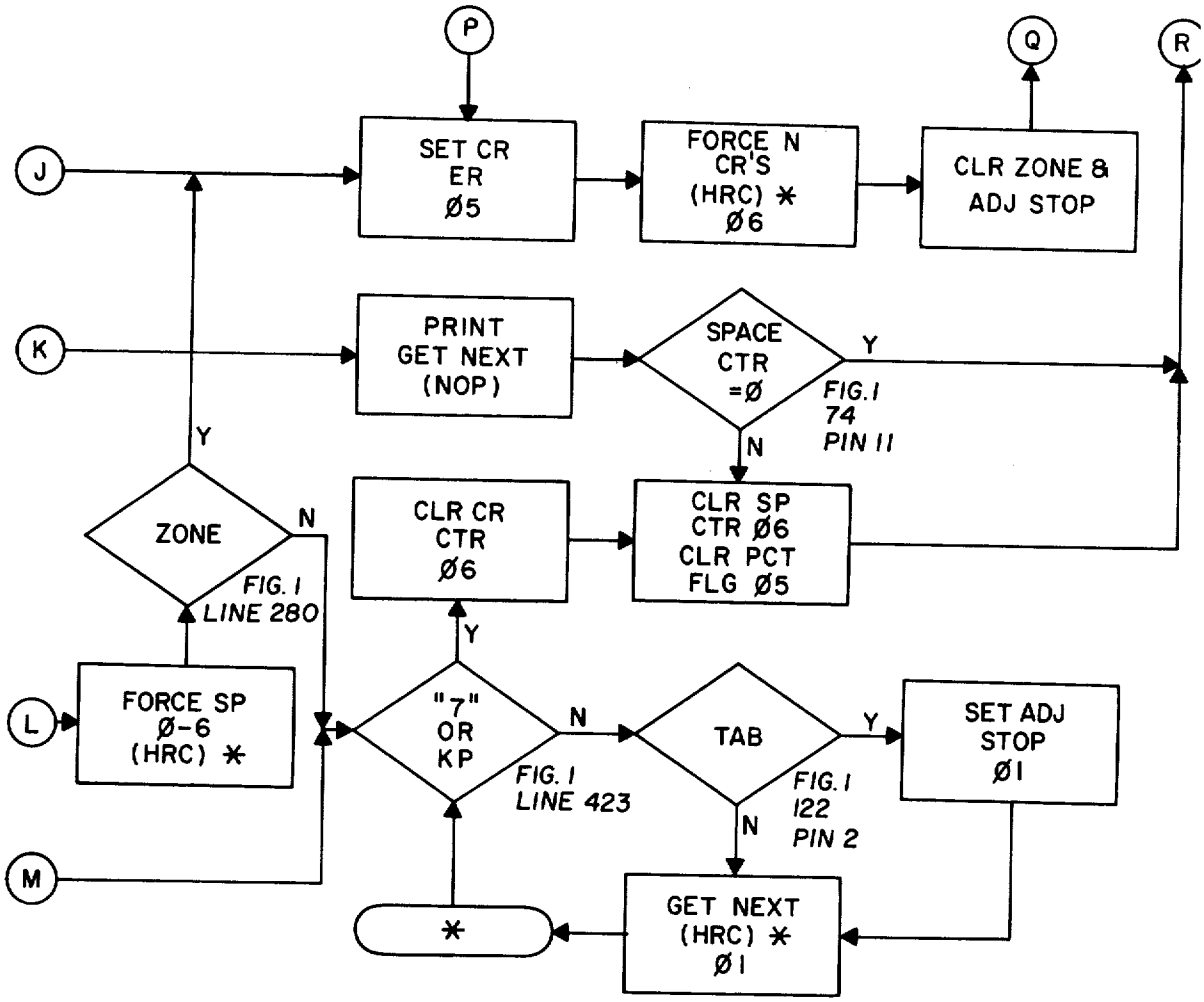
P
Q
R
J
SET CR ER Ø5
FORCE N CR'S (HRC) * Ø6
CLR ZONE & ADJ STOP
K
PRINT GET NEXT (NOP)
SPACE CTR =Ø
Y
FIG. 1 74 PIN 11
N
Y
ZONE
N
FIG. 1 LINE 280
CLR CR CTR Ø6
CLR SP CTR Ø6 CLR PCT FLG Ø5
Y
L
FORCE SP Ø-6 (HRC) *
"7" OR KP
N
FIG. 1 LINE 423
TAB
Y
SET ADJ STOP Ø1
FIG. 1 122 PIN 2
N
M
*
GET NEXT (HRC) * Ø1

Fig. 3F

RIGHT HAND MARGIN ADJUSTMENT FEATURE FOR AN AUTOMATED TYPING SYSTEM

BACKGROUND OF THE INVENTION

The invention is designed to be utilized on an automated typing system which may consist of two functional units: (1) a console which contains two magnetic tape transports, logic, power supply, and operator function keys; and (2) a typewriter which is modified with an electronic keyboard, selected heavy duty parts and additional operator function keys. Such a console is described in part in our co-pending U.S. Pat. application Ser. No. 427,925 filed Dec. 26, 1973 entitled "Search Feature for an Automated Typing System". A typewriter with an electronic keyboard, suitable for use with our invention is described in co-pending U.S. Pat. applications Ser. Nos. 336,240 and 439,310 filed Feb. 27, 1973 and Feb. 4, 1974, entitled "Typewriter with Magnetic Memory" and "A Keyboard for an Automated Typing System", respectively.

It should be understood however that our invention may be modified or adapted for use with many typing systems or justification systems for both automated typing and visual display.

An automated typing system of the class described performs the following operational functions. Information can be printed on hard copy and recorded simultaneously on magnetic tape. Information recorded on magnetic tape can be read and printed out as hard copy. Information recorded on magnetic tape can be duplicated onto a second tape in either a print or a non-print mode. Tape reading, skipping, or duplicating can be stopped automatically on a word, line, paragraph or page and unwanted information recorded on magnetic tape can be skipped over when the tape is being read or duplicated. In addition, information recorded on a magnetic tape may be searched for selected printing or duplicating.

The feature which is the subject of this invention adds an additional function to those described above. By adding and deleting spaces and carrier returns automatically, as dictated by the right hand margin, it enables the automated typing system to reformat prerecorded information according to changed margin settings of the typewriter or to compensate for words inserted or deleted in previously recorded copy.

In the past the right hand margin of printed copy has been adjusted in primarily two ways. Some systems read a line of prior recorded information, count the number of spaces either in the entire line or in the right margin zone, and then varying the spacing of the interword spaces so that each line reasonably extends to the right margin. Other systems or variations of the immediately above described system type into the right margin zone and perform a carrier return at the first available space or, in one system, at the first syllable break if the operator has previously broken each word into syllables. In those systems which accomplish a carrier return at the last available interword space in the right margin zone, if no spaces are detected in the zone, the printer continues to print characters until the end of the zone. If the operator then wishes to hyphenate the word the operator must extend the typing beyond the right margin.

SUMMARY OF THE INVENTION

The current invention is a highly improved right hand margin adjust feature for an automated typing system which performs editing functions throughout the typed material as well as the right hand margin and is responsive to a number of special characters such as sentence ending punctuation, tabs, hyphens, and line returns in addition to spaces and carrier returns. In addition, the final copy may be typed in either normal style or legal style upon the choice of the operator.

The majority of standard automated type systems continue to type after the bell rings indicating the right margin zone, normally set six characters prior to the right margin. A carrier return is inserted upon the occurrence of a space in the previously typed copy. If no space occurs after the bell rings, the standard typing system fills the six spaces with characters and stops. In other words, if the last six characters consist of the words "I am" the standard automated typing system would carriage return after "I" instead of after "am", the normal carrier return if manually typed. Alternatively, if the last word were "readable", the standard automated typing system would type "readab" and stop rather than "read-" and "able" on the next line.

The device of the instant invention stops at the bell ring, or when the right hand margin zone is entered, and looks at the remaining characters. If two interword spaces are present, a carrier return is inserted and the machine returns on the second space. If no spaces are present, the machine stops so that the secretary can hyphenate at her choosing. Thereafter, pressing a "READ" key only prints one character at a time. Therefore, when the operator reaches a syllable break, the operator can hyphenate the word and return the carrier.

Provision is also made for hyphens or spaces that must be kept regardless of carrier returns such as the hyphens in "second-to-the-last". In order to maintain the hyphens with a standard automated typing system the operator is required to vary the typing pattern such as space, space, character, space, space, which is called a "precedence code". Applicants use a "KEEP" key which, when depressed in conjunction with the appropriate character key, keeps carrier returns, tabs, spaces, and hyphens. This is often used, for example, for carrier returns in the address portion of a letter where only a quarter of a line if normally utilized.

Similarly, if in the body of a letter which is being edited there is a sentence ending punctuation mark followed by a carrier return, the edited version must be punctuated, the carrier return must be eliminated and two spaces must be added after the punctuation mark. A variation, of course, is where an abbreviation occurs, such as "Dr. Smith". In that instance, the keep key would be pressed along with the space after Dr. so that no matter where it occurs there will be the period after Dr., only one space, and then the surname following. Finally, as discussed in the edit sequences described below, the system also functions based on information such as carrier returns or spaces immediately prior to the beginning of the right margin zone, this information being retained in memory units or counters of the device.

To achieve a proper sequence the system operates on an eight phase clock. The earlier phases of the clock are used to enable the edit or adjust function and to de-

tect which characters occur in the right margin zone. The latter phases of the clock are utilized for resolution of the changes in the orginal typed copy which are dictated by the right hand margin adjust feature.

Logical circuitry to accomplish the function of looking forward into the right margin zone comprise a zone insert memory and various flip-flops to indicate the beginning and end of the zone. Alpha numeric characters or other typing characters are analyzed in this system with a special character decoder, which reads data bits in selectric code from a buffer, and a zone recycling counter and a zone shift register memory unit which are combined to detect the occurrence of the editable special characters. Counters and flip flops are utilized to count spaces, carriage returns, line returns and as flags for tabs, sentence ending punctuation or hyphens.

Logical circuitry is then utilized to further evaluate the contents of the zone to determine the existence of the typing pattern prior to and in the right margin zone and to provide a predetermined resolution of the typing pattern in the right margin zone. As indicated above, if a word extends completely across the right margin zone and beyond the right margin, or upon special occurrences such as tabs or underlining, because these are unique to each document and cannot be automatically edited, this invention detects such as occurrence and automatically stops the system prior to proceeding further. Thereafter, the operator may choose the appropriate action and after initiating a carrier return the automated typing system with a right hand margin adjust feature will continue to perform in an automatic mode.

After analysis of the right hand margin zone the system functions to generate or delete spaces and/or carriage returns as required by the analysis and on succeeding phases of the eight phase clock initiates the typing system to edit the copy and record the revised copy, if desired by the operator. With this feature the finished copy can be typed and recorded in either normal form such as used on business letters or in legal form such as used on agreements or briefs or the like.

DESCRIPTION OF THE DRAWINGS

FIG. 1 is a schematic diagram showing the electronic elements utilized in our invention for the detection of special selected characters;

FIG. 2 is a schematic diagram showing the electronic elements utilized in our invention for control of the special characters detected by the circuitry in FIG. 1; and

FIG. 3 is a flow chart showing the essential decision making steps of our right hand margin adjust feature to implement our invention.

DESCRIPTION OF THE PREFERRED EMBODIMENT

A primary function of the right hand margin adjust feature is to relocate spaces and carrier returns when the margins of a previously typed and recorded document have been changed or where an insertion or a deletion has been made to previously typed and recorded copy. To accomplish this function carrier returns in the initially typed copy must be deleted and replaced with one interword space or two interword spaces depending on the immediately preceding occurrence of sentence ending punctuation or not. Carrier returns which occur after sentence ending punctuation, such as a period, a question mark, a colon, or an exclamation mark must be deleted and replaced with two interword spaces. Carrier returns which would occur between two words in a sentence or after non-sentence ending punctuation such as a comma or semicolon must be deleted and replaced with one space.

Since tabs on a typing system will not be set to accommodate the reformated or changed copy the automated typing system stops after the occurrence of a tab in order to allow the operator to position tabular columns as desired. In addition, since the format for a legal document employs additional carrier returns, as compared to normal typing, the subject invention is adapted to produce a legal format from a rough draft copy which is typed in normal style.

To accomplish these functions, provision is made by this invention to alter the following sequences which normally occur in originally typed and recorded information. The copy is reformated in the manner indicated which is suitable for either a normal typing style or a legal typing style. In the following tables a minus sign indicates that the typing function has been deleted and a plus sign indicates that the typing function has been added.

EDIT SEQUENCES (BODY)

SEQUENCE	NORMAL	LEGAL
PUNC CR	PUNC –CR +SP +SP	PUNC –CR +SP +SP
PUNC CR CR	PUNC CR CR	PUNC –CR –CR +SP +SP
PUNC CR CR CR	PUNC CR CR CR	PUNC CR CR CR
PUNC SP CR	PUNC SP –CR +SP	PUNC SP –CR +SP
PUNC SP CR CR	PUNC SP CR CR	PUNC SP –CR –CR +SP
PUNC SP SP CR	PUNC SP SP –CR	PUNC SP SP –CR
PUNC SP SP CR CR	PUNC SP SP CR CR	PUNC SP SP –CR –CR
PUNC SP SP CR CR CR	PUNC SP SP CR CR CR	PUNC SP SP CR CR CR
PUNC SP	PUNC SP	PUNC SP
PUNC SP CR SP	PUNC SP –CR +SP –SP	PUNC SP –CR +SP –SP
PUNC CR SP	PUNC –CR +SP +SP –SP	PUNC –CR +SP +SP –SP
SP	SP	SP
SP CR	SP –CR	SP – CR
SP CR CR	SP CR CR	SP –CR –CR
SP CR CR CR	SP CR CR CR	SP CR CR CR
SP SP	SP SP	SP SP
SP SP CR	SP SP –CR	SP SP –CR
SP SP CR CR	SP SP CR CR	SP SP –CR –CR
SP SP CR CR CR	SP SP CR CR CR	SP SP CR CR CR
TAB	–TAB (STOP)	–TAB (STOP)
TAB CR	–TAB –CR +SP (STOP)	–TAB –CR +SP (STOP)
TAB CR CR	–TAB CR CR	–TAB –CR –CR +SP (STOP)
TAB CR CR CR	–TAB CR CR CR	–TAB CR CR CR

-Continued

EDIT SEQUENCES (BODY) SEQUENCE	NORMAL	LEGAL
CR	–CR +SP	–CR +SP
CR CR	CR CR	–CR –CR +SP
CR CR CR	CR CR CR	CR CR CR
CR TAB	–CR +SP –TAB (STOP)	–CR +SP –TAB (STOP)
CR CR TAB	CR CR –TAB (STOP)	–CR –CR +SP –TAB (STOP)
CR CR CR TAB	CR CR CR –TAB (STOP)	CR CR CR – TAB (STOP)
CR SP (or OPS)	–CR +SP –SP. . . .	–CR +SP –SP. . . .
CR CR SP	CR CR SP	–CR –CR +SP –SP
CR CR CR SP	CR CR CR SP	CR CR CR SP

Similar adjustments must be made prior to the right hand margin for sentence ending punctuation, spaces, carrier returns, and tabs to assure that the reformated copy follows the paragraph format of the original and so that an appropriate number of carrier returns will be added in or near the right hand margin. Accordingly, a right hand margin zone is preselected to be a multiple number of characters, for example six characters, and typewriter commands immediately preceding the right hand margin are detected and electronically evaluated to correctly reformat the final typed copy.

Accordingly, the present invention includes provisions to make the following changes for either normal typing style or legal typing style when the sequence of commands is as listed below. In the listings below the slash mark indicates the beginning of the "hot zone" or six character zone prior to the right hand margin. In the sequences listed the hot zone is designated zone one. Zones two, three and four are typing sequences where a relevant data command is located one character prior to the hot zone, two characters prior to the hot zone or three characters prior to the hot zone, respectively.

EDIT SEQUENCES (ZONE 1) SEQUENCE	NORMAL	LEGAL
/ PUNC CR	PUNC CR	PUNC CR
/ PUNC CR CR	PUNC CR CR	PUNC CR CR
/ PUNC CR CR CR	PUNC CR CR CR	PUNC CR CR CR
/ PUNC SP CR	PUNC SP CR	PUNC SP CR
/ PUNC SP CR CR	PUNC SP CR CR	PUNC SP CR CR
/ PUNC SP SP CR	PUNC SP SP CR	PUNC SP SP CR
/ PUNC SP SP CR CR	PUNC SP SP CR CR	PUNC SP SP CR CR
/ PUNC SP SP CR CR CR	PUNC SP SP CR CR CR	PUNC SP SP CR CR CR
/ PUNC SP	PUNC –SP +CR	PUNC –SP +CR +CR
/ PUNC SP CR SP	PUNC SP CR SP	PUNC SP CR SP
/ PUNC CR SP	PUNC CR SP	PUNC CR SP
/ SP	–SP +CR	–SP +CR +CR
/ SP CR	SP CR	SP CR
/ SP CR CR	SP CR CR	SP CR CR
/ SP CR CR CR	SP CR CR CR	SP CR CR CR
/ SP SP	SP –SP +CR	SP –SP +CR +CR
/ SP SP CR	SP SP CR	SP SP CR
/ SP SP CR CR	SP SP CR CR	SP SP CR CR
/ SP SP CR CR CR	SP SP CR CR CR	SP SP CR CR CR
/ TAB	–TAB (STOP)	–TAB (STOP)
/ TAB CR	–TAB CR (STOP)	–TAB CR (STOP)
/ TAB CR CR	–TAB CR CR	–TAB CR CR (STOP)
/ TAB CR CR CR	–TAB CR CR CR	–TAB CR CR CR
/ CR	CR	CR
/ CR CR	CR CR	CR CR
/ CR CR CR	CR CR CR	CR CR CR
/ CR TAB	CR –TAB (STOP)	CR –TAB (STOP)
/ CR CR TAB	CR CR –TAB (STOP)	CR CR –TAB (STOP)
/ CR CR CR TAB	CR CR CR –TAB (STOP)	CR CR CR –TAB (STOP)
/ CR SP (or OPS)	CR –SP. . . .	CR –SP. . . .
/ CR CR SP	CR CR SP	CR CR SP
/ CR CR CR SP	CR CR CR SP	CR CR CR SP

EDIT SEQUENCES (ZONE 2) SEQUENCE	NORMAL	LEGAL
PUNC / CR	PUNC CR	PUNC CR
PUNC / CR CR	PUNC CR CR	PUNC CR CR
PUNC / CR CR CR	PUNC CR CR CR	PUNC CR CR CR
PUNC / SP CR	PUNC SP CR	PUNC SP CR
PUNC / SP CR CR	PUNC SP CR CR	PUNC SP CR CR
PUNC / SP SP CR	PUNC SP SP CR	PUNC SP SP CR
PUNC / SP SP CR CR	PUNC SP SP CR CR	PUNC SP SP CR CR
PUNC / SP SP CR CR CR	PUNC SP SP CR CR CR	PUNC SP SP CR CR CR
PUNC / SP	PUNC –SP +CR	PUNC –SP +CR +CR
PUNC / SP CR SP	PUNC SP CR SP	PUNC SP CR SP
PUNC / CR SP	PUNC CR SP	PUNC CR SP

-Continued

EDIT SEQUENCES (ZONE 2)

SEQUENCE	NORMAL	LEGAL
SP / CR	SP CR	SP CR
SP / CR CR	SP CR CR	SP CR CR
SP / CR CR CR	SP CR CR CR	SP CR CR CR
SP / SP	SP −SP +CR	SP −SP +CR + CR
SP / SP CR	SP SP CR	SP SP CR
SP / SP CR CR	SP SP CR CR	SP SP CR CR
SP / SP CR CR CR	SP SP CR CR CR	SP SP CR CR CR
CR /	−CR +SP +CR	−CR +SP +CR
CR / CR	CR CR	−CR −CR +SP +CR +CR
CR / CR CR	CR CR CR	CR CR CR
CR / TAB	−CR +SP +CR −TAB (STOP)	−CR +SP +CR −TAB (STOP)
CR / CR TAB	CR CR −TAB (STOP)	−CR −CR +SP +CR +CR −TAB
CR / CR CR TAB	CR CR CR −TAB (STOP)	CR CR CR −TAB (STOP)
CR / SP (or OPS)	−CR +SP +CR SP....	−CR +SP −SP +CR
CR / CR SP	CR CR SP	−CR −CR +SP +CR +CR +SP
CR / CR CR SP	CR CR CR SP	CR CR CR SP

EDIT SEQUENCES (ZONE 3)

SEQUENCE	NORMAL	LEGAL
PUNC CR /	PUNC −CR +SP +CR	PUNC −CR +SP +CR
PUNC CR / CR	PUNC CR CR	PUNC −CR −CR +SP +CR +CR
PUNC CR / CR CR	PUNC CR CR CR	PUNC CR CR CR
PUNC SP / CR	PUNC SP CR	PUNC SP CR
PUNC SP / SP CR	PUNC SP CR CR	PUNC SP CR CR
PUNC SP / SP CR	PUNC SP SP CR	PUNC SP SP CR
PUNC SP / SP CR CR	PUNC SP SP CR CR	PUNC SP SP CR CR
PUNC SP / SP CR CR CR	PUNC SP SP CR CR CR	PUNC SP SP CR CR CR
PUNC SP / CR SP	PUNC SP CR SP	PUNC SP CR SP
PUNC CR / SP	PUNC −CR +SP +CR SP	PUNC −CR +SP +CR SP
SP CR / CR	SP CR CR	SP −CR −CR
SP CR / CR CR	SP CR CR CR	SP CR CR CR
SP SP / CR	SP SP CR	SP SP CR
SP SP / CR CR	SP SP CR CR	SP SP CR CR
SP SP / CR CR CR	SP SP CR CR CR	SP SP CR CR CR

EDIT SEQUENCES (ZONE 4)

SEQUENCE	NORMAL	LEGAL
PUNC SP CR / CR	PUNC SP CR CR	PUNC SP −CR −CR +SP +CR +CR
PUNC SP SP / CR	PUNC SP SP CR	PUNC SP SP CR
PUNC SP SP / CR CR	PUNC SP SP CR CR	PUNC SP SP CR CR
PUNC SP SP / CR CR CR	PUNC SP SP CR CR CR	PUNC SP SP CR CR CR
PUNC SP CR / SP	PUNC SP −CR +SP +CR SP	PUNC SP −CR +SP +CR SP
PUNC CR SP /	PUNC −CR +SP +SP −SP +CR	PUNC −CR +SP +SP −SP +CR

The above exemplary sequences indicate the variations which occur where only punctuation, spaces, carrier returns or tabs are located in the body of the typed material or in the zone prior to the right hand margin. In addition, the invention has provisions to vary both the body and the right hand zone upon the occurrence of line returns, where the carrier is returned to the beginning of a line without starting a new line, and hyphens, which occur either at a syllable break or as part of a standard hyphenated word.

As explained more fully below, carrier returns will occur in the right hand margin at the last available space which occurs therein. A KEEP key is also provided which may be depressed for unalterable typing commands such as hyphenated words like second-to-the-last.

An embodiment suitable to accomplish the functions and objectives of our invention is shown schematically in FIGS. 1 and 2. The function of the elements in FIG. 1 are primarily to detect and decode the special characters which are controlled by the right hand margin adjust feature and to record the occurrence of sentence ending punctuation and hyphens. Space control is also provided with a two stage space counter. In addition, the elements shown in FIG. 1 provide the logical circuitry to look ahead into the hot zone to determine the occurrence of spaces, the number of which are maintained in the space counter, and other typed characters or special characters indicated by the special character decoder. Finally, the elements of FIG. 1 establish an multiple phase clock in this embodiment having eight phases, for controlling the logical sequence of events in a proper order. Generally, the first and third phases of the eight phase clock are utilized to check for occur-

rence of characters while the latter stages of the clock, the fifth, sixth and seventh phases, are utilized to modify the information in accordance with the objectives of the invention.

The right hand margin adjust system is enabled with an edit enable flop **12** shown on FIG. **2** which is an alternate action flop receiving an inverted differentiated pulse from an edit switch (not shown) on line **14** through a differentiator **R1, R2, R4, C8** and **C9**, and an inverter **15** to the clock input pin **6**, of the edit enable flop **12**. The occurrence of a master clear signal when power to the unit is turned on resets the edit enable flip flop **12**. The master clear is fed to the reset pin, pin **8** of the flip flop **12** along line **17**. When the edit switch is depressed the low output on output pin **10** of the edit enable flop **12** is utilized along line **18** through inverter **21** and line **22** to energize an edit indicator light on the console (not shown). The low output on pin **10** of the edit enable flop **12** is also connected to a negative input NAND gate **24**, pin **8**, the output of which on pin **10**, is fed along lines **26** and **27** to reset a print character flip flop **30** and along lines **26, 27, 28, 30** and **31** respectively to reset a carriage return flip flop **33** and the zone inhibit flip flop **34** discussed below. It is also connected with lines **26, 27, 36, 37** and **38** to input pins **1** and **10**, respectively, of a hold for delete flop **40** and sets a hold for insert flop **41**. Finally, the output of the inhibit NAND gate **26** is connected with lines **26, 27,** 43, inverter **45**, lines **47** and **48** to input line **50** of FIG. **1**, is inverted with inverter **52** and fed along lines **54** and **56** to partially enable NAND gate **58** the output of which, on pin **12**, is fed with line **60** to reset a decade counter **62**, discussed below. The output of inverter **52** is also fed along lines **54, 64, 67, 68, 70, 71** and **72** where it is utilized to reset the first flip flop **74** of a two stage space counter, a hyphen flag **76**, and a punctuation flag **78**.

Referring again to FIG. **2**, the second input to the NAND gate **24**, on pin **9**, is utilized to disable or inhibit the margin adjust circuitry in the even pretyped material is duplicated or skipped or if the automated typing system is operating in a record mode but is not reading tape. This prevents the system from attempting to edit information as it is being typed.

These inhibits are accomplished with input lines **81** and **82**, the signals on which indicate that the automated typing system is in the duplicate or skip mode of operation. These signals are channelled through a NOR gate **83** along line **85** to input pin **4** of a negative input NOR gate **87**. The fact that the system is recording but not reading a tape is detected on lines **89** and **90** which are connected to input pins **4** and **5** of a NAND gate **92**, the output of which, on pin **6**, is connected with line **94** to the input pin **5** of the negative input NOR gate **87**.

In addition, the right hand margin adjust system is also inhibited during, and reset after, execution of a carrier return by the typing system.

This is accomplished with NAND gate **96** which is connected to input pin **3** of the negative input NOR gate **87** with line **98**. One input to NAND gate **96** is the read indicator, indicating that the system is reading a tape, which is connected to input pin **2** of the NAND gate **96**. Another input, on pin **1**, indicates that at least one carrier return is loaded in a carrier return shift register **100** and that the carrier return flip flop **33** has been set, thereby causing the typing system to execute the carrier return.

The fact that at least one carrier returns is loaded is indicated by a high signal on the first stage of the carrier return shift register **100**, pin **15**. This is connected with lines **103, 104, 105** and **106** to a NAND gate **107**. The enabling signal to the typing system is indicated by a high output from the carrier return flip flop **33**, pin **15**. This is connected with lines **109, 110** and **111** to the second input of the NAND gate **107**. The low output of the NAND gate **107** when both conditions are met is connected with line **114** to input pin **1** of the reset NAND gate **96**.

As explained more fully below the system sequence of operation is controlled by the eight phase clock. Therefore, the third signal, which fully enables the reset NAND gate **96** is phase one of the clock, thus assuring that the system parameters are not reset until after the carrier return has been executed. Phase **1** of the clock is connected with lines **116** and **117** to input pin **13** of the NAND gate **96**. The output of NOR gate **87** is connected with line **120** to input pin **9** of NAND gate **24**.

Therefore, when the system is initially energized, and after carrier returns are accomplished during the right hand margin adjust feature, all system control units are set or reset to initiate editing of the next line.

Referring now to FIG. **1**, a special character decoder **122** is provided which decodes in a suitable manner the occurrence of a sentence ending punctuation, such as a period, question mark or a colon, a tab, a carrier return, a space, a hyphen, or a line return on output pins **1–6**, respectively. These signals are decoded from a read buffer (not shown) which contains the selectric code positions assigned each character. In addition, a signal indicating that an alphanumeric character, such as a letter of the alphabet, is in the buffer also originates from the read buffer, in the instant embodiment from the seventh read buffer position.

As data changes in the read buffer extraneous noise pulses will occurr on the input lines to the special character decoder **122** as the data bits are changing. Therefore, the buffer cannot be read until after the signals have settled. In addition, to implement the decision making processes, as indicated on the flow chart in FIG. **3**, each successive character or function in the read buffer must be sequentially detected, decoded and the proper functions must be generated in accordance with or similar to the exemplary sequence tables set forth above. Accordingly, an eight phase clock is utilized shown in FIG. **1** particularly, FIGS. **1***c* and **1***d*.

Basically, after a rest period during the zero phase of the clock, the first and third phases are used to detect characters and to initiate the function generating processes. The fifth, sixth and seventh phases of the clock are utilized to generate the appropriate function in accordance with the character or typing command which was detected in view of previously recorded information contained in the flip flops, counters and shift registers of the circuitry. The remaining phases of the clock are utilized as rest periods to assure sequential operation. In addition, the flops utilized are edge triggered devices wherein a flop may be conditioned on the leading edge of a clocking signal with the action of the flop taking place on the trailing edge of the clocking signal.

The multiple phase clock utilized is basically a decade binary counter **62** with a binary to decimal decoder **130** on the output. This provides eight stages, phases zero through seven. The D input on pin **12** of

the binary to decimal converter **130** is utilized as a disable so that there are eight available clock phases out. Phases one, three, five, six and seven are utilized as explained above to control the sequence of the right hand margin adjust circuitry. These are the actual active states. Phase zero and phase two are utilized as a rest or neutral stage and phase four is used only as a stopping position while getting more tape to read additional information into the buffer (not shown):

Nine hundred and sixty kilohertz on input line **132** is utilized as the base clock frequency so each clock pulse is approximately 500 nanoseconds wide. The 900 and 60 kilohertz is fed into the counter from input line **132** line **134** through NAND gate **135** negative input NAND gate **137** lines **138** and **139** negative input NAND gate **141** to input pin **1** of the counter along line **143.** The nine hundred and sixty kilohertz is also connected from negative input NAND gate **137** along lines **138** and **145** to the D input of the binary to decimal decoder **130,** input pin **12,** to modulate the clock pulses by shifting them to the non-existant second output. Accordingly, each clock pulse has a pulse width of approximately five hundred nanoseconds.

A disabling signal is also connected to NAND gate **135,** input pin **5,** which is a data strobe from the typing system keyboard circuitry which inhibits the clock until the data command has been printed. A disabling signal to control the clock is also connected to input NAND gate **37** which originates from the circuitry in FIG. **2** and is connected from input line **147** to negative input NAND gate **150.** This is also sequenced with phase four of the clock, being connected from output pin **5** of the binary to decimal decoder **130** along line **153** to input pin **11** of negative input NAND gate **150.** The output of negative input NAND gate **150** is connected from output pin **13** with line **151** to input pin **13** of negative input NAND gate **137.**

As the counter **62** counts to decimal eight output A, on output pin **12** will go high. This is connected to input pin **9** of NAND gate **141** along lines **155** and **156** and to input pin **1** of NAND gate **158** along lines **155** and **160.** If a low going signal, to be discussed below designated edit run, is present on input line **163** output pin **6** of a negative input NOR gate **164** will be high which will fully enable NAND gate **153** causing output pin **3** of NAND gate **153** to go low. This is connected to NAND gate **58,** pin **2** with line **166.** Therefore, output pin **12** of NAND gate **166** will go high which will reset the counter along line **160** which will pull the A output of the decade counter **62,** pin **12,** low. Along the circuitry traced immediately above the reset signal will go low and the counter **62** will automatically start again. Therefore, if the edit run signal is low the counter **62** will run continuously.

An edit clock signal on input line **169** is connected to pin **3** of negative input NOR gate **164.** This is a clock signal from the printer (not shown) indicating that the printer is not ready to accept additional data. This will stop the counter at stage **8** where the A output of the counter **62,** on pin **12,** is high and the counter **62** will rest because input pin **2** of NAND gate **158** will be high. Therefore, pin **2** of NAND gate **58** will be low. Thereafter, when pin **2** of NAND gate **58** goes high, the counter **62** will be reset and operation of the clock will continue as described above.

The high output on stage A of the counter **62,** on output pin **12,** is also used to inhibit clock pulses to the counter **62** with lines **155** and **156** connected to input pin **9** of negative input NAND gate **141.** The second input to NAND gate **141,** as described above, is the 960 kilohertz signal utilized as the base clock frequency.

The additional enabling signals on NAND gate **58** are a signal to cycle data and the edit signal. The edit signal on input line **50** is inverted with inverter **52** and connected with lines **54** and **56** to input pin **13.** The signal which stops the clock while data is being recirculated originates from a recirculate control flip flop **171,** output pin **15,** and is connected with lines **173, 174** and **175** to input pin **1** of NAND gate **58.**

In the manner described, the eight phase clock is established and controlled by the edit clock, edit run and edit control signals on input lines **169, 163** and **147,** respectively. The low going clock pulses from output pins **2, 4, 6, 7** and **9** are inverted with inverters **178, 179,** 180, 181 and **182** and utilized as sequence controls designated Phases one, three, five, six and seven on output lines **185, 186, 187, 188** and **189.**

As indicated in the first table of sequences listed above the carrier returns which occur between two words in the body of the document that is being reproduced will be deleted and a space will be inserted in place of the carrier return. If the carrier return detected follows sentence ending punctuation the carrier return will be deleted and two spaces will be added. If a hyphen occurs, and there is no indication that the hyphen is to be kept, the hyphen will be deleted and no space will be inserted in place of the hyphen. If a hyphen is detected that is to be kept following a carrier return, the hyphen will be kept and no space will be inserted in place of the carrier return. If a tab is detected in the typed material the typing system will automatically stop so that the operator can position tabular columns in the new format as she chooses. This is accomplished in the following manner.

Space command signals are generated on output line **194** in response to the punctuation flag flop **78** and the space counter comprised of two flops **74** and **196.** These are connected to a negative input NOR gate **198** along line **200** from the punctuation flag **78** and **201** from the space counter flop **74.** A signal indicating sentence ending punctuation from the special character decoder **122** is fed along line **204** through NOR gate **205** to condition the punctuation flag **78** at input pin **4** which is clocked by phase five of the eight phase clock along lines **206** and **207** to input pin **12** of the punctuation flag **78.** As the output on pin **3** of the flop **78** goes high this partially enables NAND gate **210,** the low output from which on pin **11** is fed along line **200** to negative input NOR gate **194** to generate a space command. The second enable on NAND gate **210,** pin **13** is connected to pin **14** of the second stage **196** of the space counter. When pin **14** of the second stage **194** of the space counter is cleared high, as is discussed below, the high signal on pin **14** will fully enable NAND gate **210** and a space command will generate a space.

When a space or spaces are inserted to replace a carrier return or the like this produces a low going signal on input line **213** which is connected through negative input NOR gate **215,** pin **5,** and from the output, pin **6,** of negative input NOR gate **215** along lines **217, 218** and **219** to input pins **9** and **4** respectively of the space counter flip flops **74** and **186.** The first time the space counter **15** clocked, on input pins **6** and **1** of the flip flops **74** and **186,** respectively, by phase six of the eight

phase clock, along lines **222** and **223** through inverter **181** and along lines **226, 227, 228** and **229** respectively, pin **11** of the first flop **74** will be low which holds the reset pin, pin **3**, connected from output pin **11** of the first flop **74** along line **231** to the second flop **196**, low. This holds the second flop **196** in a reset condition regardless of the occurrence of the clock pulse on clock input, pin **1**.

Therefore, the first time that the clock pulse occurs one space is counted and a second space must be generated to clock output pin **14** of the second stage **196** of the space counter low. This removes the enable from NAND gate **210** on pin **13** to stop generating spaces through negative input NOR gate **198**. Accordingly, two spaces are generated to replace a carrier return after the punctuation flag **78** has been set.

If the signal on NAND gate **210**, pin **12**, from output pin **3** of the punctuation flag **78** is low, indicating that there was no punctuation, but a carrier return was detected by the special character decoder **122**. This must be replaced by only one space. Accordingly, the output of the first flip flop **74** of the two stage space counter is connected from output pin **11** along lines **231** and **201** to input pin **1** of the negative input NOR gate **198**. After the first space is generated on line **213** the output on pin **11** of the first flip flop **74** will go high, this signal being connected to input pin **1** of the negative input NOR gate to shut off the space command to stop generating spaces. The existence of the carrier return originates from the special character decoder **122** on line **234**, is fed to the circuitry of FIG. **2** along line **237** and is used to condition pin **1** of the punctuation flag **78** from the special character decoder **122** along lines **234**, 238, negative input NOR gate **241**, lines **244** and **245** to pin **3** of negative input NAND gate **247** and to the second enabling input of NAND gate **247**, input pin **2**, from line **244** through NOR gate **205** and line **251**. Since both of the inputs to negative input NAND gate **247** are then low the high output will condition the punctuation flag **78** to effectuate the space commands as described above. The carrier return signal, if detected in the hot zone prior to the right margin is also connected with lines **234, 253, 254**, negative input NOR gate **258**, and line **260** to NAND gate **262** and line **263** to input pin **11** of a zone insert memory **270** to clock the memory **270** for reasons which will be described more fully below.

If a hyphen is detected in the typed copy this would indicate that a word has been hyphenated at the end of a line unless the keep key (not shown) is depressed along with the hyphen, for example, prehyphenated text. When the hyphen is indicated by the special character decoder **122** on output line **272** it is connected with line **273** to negative input NAND gate **275**, the high output of which pin **10**, is inverted with inverter **277** and is used to direct set the first stage **74** of the space counter, input pin **7**, to indicate one space. Since, however, no space is generated, no space will occur in the retyped copy. In other words, the reason for direct setting the space counter is to avoid generating a space command to replace a carrier return in hyphenated text at the end of a sentence. It should be noted that the second enabling signal, on input pin **8**, of negative input NAND gate **275** is the phase seven clock pulse. As explained above, the various phases of the clock are utilized to clock in the special characters because as data shifts into the read buffer extraneous pulses may appear as the data changes. By the time the phase seven clock pulse is emitted the read buffer data bits are settled and may be accurately decoded by the special character decoder **122**. The system functions as described above until the right hand margin zone is reached. The start of the zone is manually set by the operator of the typing system when the right hand margin is set. When the zone switch makes, indicating that the carrier has reached the beginning of the zone, this produces a low going signal on input line **280** to set and condition a start zone flip flop **282** along lines **280, 284**, NOR gate **285** and line **286** to input pin **4** of the flip flop **282** to set it and along lines **280** and **288** to input pin **2** of the flip flop to condition it. Thereafter, the next six characters in the read buffer (not shown) will be individually interrogated to reformat the right hand margin. The number of characters to be interrogated might be varied, as explained more fully below. In the six character zone the circuitry functions as follows.

If a carrier return is detected it is utilized as the carrier return in the right hand zone. If one or more spaces are detected in the hot zone the last available interword space is deleted and replaced by a carrier return. If a kept hyphen is detected the hyphen is kept and a carrier return is inserted after the hyphen. If no spaces or carrier returns are detected in the zone the system automatically stops so that the operator, by depressing the read switch (not shown), can sequentially print one character at a time to determine where a hyphen should be inserted at an appropriate syllable break. After the carrier return is executed the automated typing system will again operate in the right hand margin adjust mode and will continue to delete carrier returns in the body of the information and insert them in the zone immediately preceding the right hand margin.

Before the zone is reached if two carrier returns are detected in the normal mode, or three in the legal mode, indicating a new paragrapah, these carrier returns are kept no matter where they occur in the body of the text.

The signal indicating that the hot zone has been reached conditions and sets the start zone flop **282** as explained above. The low signal on output pin **5** of the start zone flip flop **282** is differentiated with **C8, R1** and **R2** and connected with line **291** to input pin **9** of a negative input NAND gate **294**. The second enable, on input pin **8** of the negative input NAND gate **294**, if low indicates that a carrier return is loaded into the carrier return counter indicating that immediately preceding the zone a carrier return was detected. This is connected from input line **297** and line **298** to input pin **8** of the NAND gate **294**. The carrier return loaded signal originates from the circuitry shown in FIG. **2**, output line **300**, which will be discussed below. If a carrier return is loaded the sequential checking of the characters in the zone will not occur. The carrier will simply be returned upon the occurrence of the zone switch.

The output of negative input NAND gate **294** is connected with line **303** to input pin **12** of a second NAND gate **305**. Similarly, the second enabling input to NAND gate **305** is connected to input line **307** which indicates that immediately preceding the zone there was no indication that a carrier return should be generated. Again, in the event the prezone circuitry has indicated that a carrier return should be generated the carrier return will be effected immediately upon reaching the zone.

The output of NAND gate **305**, on pin **11**, is connected to an end zone flip flop **310** and a buffer recycling control flip flop with lines **312** and **313** and line **315** to input pins **8** and **3** thereof, respectively. The output on the second flip flop **171**, on pin **15**, is connected with lines **173, 174, 318, 319** and **320** to enable a three stage **325, 326, 327** zone recycling counter on input pins **2** and **3** of each of the stages **325, 326** and **327** of the counter. Pin **1** of the first stage of the first counter **325** is connected with line **330** to the 960 kilohertz signal which runs the clock. The direct connection is made because the clock is deactivated for certain conditions and is in a deactivated state upon the initiation of the zone. The **960** kilohertz is divided by four in the B and C stages of the first counter **325**. The B stage which is coupled automatically to the C stage and C stage output, on pin **8** of counter **325**, is connected to input pin **9** of NAND gate **333** with line **335**. The output of NAND gate **333**, on output pin **8**, is connected to the read buffer (not shown) which clocks the read buffer forward. The output of the first counter **325** is also connected with line **338** to the input of decade counter **326**, on input pin **14**. The output of the first decade counter **326**, on pin **11**, is connected to the second decade counter **327** input on pin **14** and the output on pin **11** of the second decade counter **327**, which is now divided by **100**, is connected with line **340** to the first stage of the first counter **325** on pin **14** which yields a clock pulse output on the output of stage A of the first counter **325** on output pin **12**. Consequently, the output on pin **12** will go high at **100** and low at **200**. The low going signal is utilized as a clock pulse for the recirculate control flip flop **171** being connected to input pin **1** thereof with line **344**. This stops the clock and recirculates, with associated circuitry (not shown), the two hundred characters or typewriter functions into and through the read buffer.

The first six characters of the two hundred characters which are recirculated are those characters which are interrogated to determine the contents of the zone, particularly carrier returns and spaces, so that a carrier return may be executed or inserted as required. This is accomplished as follows.

The output of the end of zone flip flop **310**, on output pin **10**, is connected with line **346** to a shift register **270**, designated zone insert memory, input pin **10**. This enables the counter **270** to clock available spaces in, by shifting the shift register right each time a space is detected on the clock input, pin **11**, as long as the output of the end of zone flip flop **310** is high. After the first four counts pin **8** of the first decade counter **326** goes high which is connected to the J input, input pin **9** of the J K end of zone flip flop **310** with line **348**. Therefore, the next time that the clocking pulse goes low on the end of zone flip flop **310** the counting will stop and the flip flop **310** will be clocked off. This occurs when the output of the first decade counter **326** of the zone recycling counter on output pin **12** goes low which is at a count of six. This yields the six characters which are detected and decoded by the special character decoder **122** to determine the action to be taken in the right hand margin hot zone.

The buffer will continue to recirculate to the count of **200** so that after the checking has been accomplished the characters in the read buffer will be at precisely the same position that they were prior to the check of the characters in the hot zone.

Checking in the hot zone is further accomplished with NAND gates **350** and **262** and two NOR gates **258** and **352** which are utilized to detect the occurrence of spaces or carrier returns in the hot zone. The occurrence of spaces is detected on line **354** and fed through negative input NOR gate **215**, lines **217** and **356** to input pin **1** of NAND gate **350**. Generated spaces are detected from the generated space input line **213** through NOR gate **215** to the same input pin of the NAND gate **350**. The second enabling input to that NAND gate **350** is connected to the key-board keep signal on input line **358** along lines **359** and **360**. The absence of a signal indicating that the space should be kept fully enables NAND gate **350**, the output of which is fed along line **362** to input pin **4** of the negative input NOR gate **258**. The output of NOR gate **258** is fed along line **260** to input pin **9** of NAND gate **262** which partially enables that NAND gate **262**.

Occurrence of a carrier return is detected on output line **234** of the special character decoder **122** and is fed along lines **253** and **254** to the second input pin, pin **3** of the negative input NOR gate **258** and hence to the NAND gate **262**. The second enable on the NAND gate **262**, on input pin **10**, is the phase six clock pulse utilized for control as discussed above. In addition, a second input to NOR gate **352** on input pin **12** is the initial signal to the clock discussed above. This signal from output pin **8** of NAND gate **333** is fed along lines **364** and **366** to input pin **12** of the NOR gate **258**. Therefore, the NAND gate **262** is enabled when the six characters are being read and the occurrence of a carrier return or a space or a generated space will clock the zone insert memory counter **220** to indicate that one or more spaces or carrier returns have been located in the hot zone. This indication, on output pin **3**, of the zone insert memory counter **270** is connected to output line **368** and utilized as described below primarily to generate carrier returns in place of spaces or, in the event a carrier return occurs within the zone, to utilize that carrier return to begin the new line.

If the signal on outpin **3** of the zone insert memory counter **368** is one or more the sequence continues to reformat the hot zone. If the output of pin **3** is zero, indicating that no special character was encountered, this indication is connected to a zone stop flip flop **370** along line **372** to the D input, pin **12**, of the stop zone flip flop **370**. After the read buffer has been recirculated the full **200** characters pin **15** of the recirculate control flip flop **171** goes high which is connected to the clock of the zone stop flip flop **370** by lines **173**, 174, 368, 319, and **374**, to input pin **11**. The output of the zone stop flip flop **370** serves to stop the automatic operation of the system and thereafter the operator must determine where the line will end, hyphenate and perform a carrier return to reinitiate operation of the system. The circuitry automatically puts the system into a read by character mode which means that every time the operator depresses the read switch (not shown), the system will read and print one character at a time. The operator may then insert a hyphen or a carrier return or multiple carrier returns. Once a carrier return has been accomplished and the operator depresses the read switch again, the right hand margin adjust feature circuitry will be enabled in the manner described above and the system will automatically continue in the automatic mode without further operator action.

As indicated above, six characters were chosen as an exemplary feature for the right hand margin zone. In fact, the multiple character hot zone could be chosen to be any number of characters depending upon the choice of design. Six, nine or twelve characters may be easily accomplished in the preferred embodiment with no changes in parameters and relatively minor changes in connections. Currently the preferred embodiment as described would be limited to a maximum zone of 200 characters, that being the extent of the read buffer. However, additional buffer stages may be added to increase the potential of the circuitry as desired.

To vary the extent of the zone within the 200 character limitation by the read buffer all that would be necessary would be to change the controlling pins that are going into the J, clock and K inputs, pins **9, 6** and **12** respectively of the end zone flip flop **310.** With additional gating any number between **1** and **200** may be utilized as the extent of the right hand zone.

In the event the zone insert memory counter **368** has detected special characters in the chosen right hand margin hot zone the high output on pin **3** will prevent the zone stop flip flop **270** from terminating the automatic sequence of operation. The high output on the recirculation control flip flop **171,** pin **15** is connected with lines **173, 380** and **382** to the shift left input of the zone insert memory counter **270,** on input pin **10.** Thereafter data bits are shifted out of the zone insert memory counter **270** every time a space or carrier return is detected by the special character decoder **122.** Note that this also occurs on phase **6** of the eight phase clock through negative input NOR gate **352** which fully enables NAND gate **262** when spaces or carrier returns are detected in the manner described above.

The last interword space is converted to a carrier return when the signal on pin **3** of the zone insert memory **270** goes low indicating the last space has been reached. A carrier return is generated by the circuitry shown in FIG. **2** as described more fully below. As a carrier return is generated, the signal on input line **307** goes high which enables NAND gate **305** through input pin **13.** The low output on pin **11** clears the end of zone flip flop **310** and the recirculate control flip flop **171** and the output from pin **15** of the recirculate control flip flop **171** resets the zone recycling counter **325,** 326, 327 and the decade counter **62** for the clock from output pin **15** along lines **173, 174, 318, 319** and **320** and line **175** NAND gate **58,** line **60** to the clock counter **62,** respectively.

Since a carrier return in the hot zone will initiate a carrier return on the reformated copy the zone insert memory counter **270** is primarily utilized to count spaces in the zone in order that the last space in the zone is utilized for the carrier return. The output of the zone insert memory **270** is connected from output line **368** on FIG. **1** to input line **400** on FIG. **2.** The original high output of the greater or equal to one input **400** on FIG. **2** indicates that the system is operating in the zone. As indicated above, when that input **400** to the circuitry on FIG. **2** goes low it indicates that the last space has been reached and thus one or more carrier returns must be inserted to properly reformat the typed copy.

Referring now to FIG. **2,** insertion of carrier returns in place of spaces or the like are accomplished primarily with a carrier return shift register **100.** Provision is made for the operator to select whether or not the information will be typed in a reformated style in legal form, which double spaces each line. Therefore, when a legal switch (not shown) connected to input line **402** is energized, it will load two carrier returns to replace the last interword space located in the zone. If the operator selects the normal mode of operation only one carrier return is loaded to replace an interword space.

Carrier returns are inserted or executed after the contents of the zone have been determined. If the signal on line **400** from the zone insert memory shift register **270** is low, no carrier returns or spaces were detected in the zone and the system will be stopped for operator action. If the signal on line **400** is high one or more carrier returns or spaces were detected in the zone. Carrier returns detected in the zone will be utilized and executed. The last interword space will be utilized and a carrier return inserted if no carrier returns were detected.

Carrier returns detected by the special character decoder **122** are connected from output line **237** in FIG. **1** to input line **410** on FIG. **2.** The existence of an alphanumeric character or depression of the keep key are detected on input lines **358** and **412** of FIG. **1** and are connected with lines **359,** inverter **414,** lines **415** and **416** and line **418** respectively to a NOR gate **421,** the output of which on line **423** is connected to input line **425** of FIG. **2.** Therefore, if neither a carrier return nor an alphanumeric character nor a kept character of any kind is detected the output of NOR gate **428** will be high which conditions the print character flip flop **30** on input pin **16** along line **486.** As shown the phase seven clock pulse clocks the flop **30.**

The high output on pin **15** of the flop partially enables NAND gate **488,** along line **490,** which is fully enabled when the greater or equal to one signal on line **400** goes low indicating that the last space has been reached.

When the greater or equal to one signal goes low it is inverted with inverter **492** and the high output on pin **10** of the inverter **492** is connected with lines **493** and **494** to input pin **10** of the NAND **488** gate. The low output on pin **8** of NAND gate **488** is connected with line **496** to input pin **8** of negative input NAND gate **430.**

The second enabling input to NAND gate **430** on input pin **9** is connected to line **486** which indicates that neither a character return or a kept character was detected. Therefore, output pin **10** of the negative input NAND gate **430** will be high. This is connected with lines **497, 498** and **499** to input pin **3** of an inverter **502** and with line **504** to input pin **6** to a negative input NAND gate **506.** The output of the inverter **502** is connected to a capacitor **C10** and with lines **508** and **509** to input pin **5** of the NAND gate **506.** This differentiator creates a short positive pulse from the output, on pin **4,** of NAND gate **506.** This is connected with line **508** to input pin **13** of NAND gate **432.**

The second enabling input to a NAND gate **432** is connected with line **435** to the carrier return input line **410** and since no carrier return was detected NAND gate **432** is fully enabled so that the output, on pin **11,** will go low with a short pulse. This is connected with lines **512** and **513** to input pin **4** of a negative input NOR gate **520,** the output of which, on pin **6,** is connected with line **524** to input pin **9,** the SO input of the carrier return shift register, **100.**

The output of NAND gate **432**, on pin **11**, is also connected with lines **512**, **526** and **527** to an inverter **530**, the output of which is connected with line **531** to input pin **12** of NOR gate **533**. The low going pulse on the output thereof is connected with line **535** to an inverter **536** which yields a high going pulse on the S1 input, pin **10**, of the carrier return shift register **100**. At the same time as the inverter **530** output, on pin **12**, goes high it gives a differentiated pulse to the input, pin **8** of a NOR gate **538**, the low going output of which is connected with lines **540** and **541** to the clock input of the carrier return shift register **100** on pin **11**. As explained above, this loads one carrier return into the shift register **100**, indicated on the QA output, if the system is set by the operator to the normal typing style or two carrier returns, into the shift register **100**, indicated on the QA and QB outputs, if the operator has chosen the legal form.

Finally when the differentiated pulse from NAND gate **432** goes low, on pin **11**, this is connected with lines **512**, **526** and **544** to input pin **12** of a negative input NOR gate **545** which is inverted with inverter **547** and the low pulse from output pin **6** of inverter **547** is connectd with lines **548** to direct set the carrier return enable flip flop **33** on input pin **2**.

The resulting high output on pin **15** of the carrier return enable flip flop **33** is connected with lines **109**, **110** and **111** to partially enable NAND gate **107**. NAND gate **107** is fully enabled by the QA output of the carrier return shift register **100** and is connected thereto with lines **103**, **104**, **105** and **106**.

The output of NAND gate **107** is connected with lines **114** and **487** to inverter **489**, the output of which partially enables NAND gate **550**. The second enabling input to NAND gate **550** is the phase six clock pulse connected in input pin **2** from input line **552** along lines **554** and **555**.

The output of NAND gate **550** is connected to output line **557** designated "carrier return insert" which inserts the carrier return to initiate the new line of copy.

The direct set of the carrier return enable flip flop **33** is also used upon the occurrence of an end of page code on input line **560**, which indicates that the document being reproduced has been completed. This input is connected to input pin **10** of a three input NAND gate **563** through a negative input NOR gate **561** with line **562**. The enabling input to the NAND gate **563** on pin **9** is the phase **5** clock pulse which is connected to input pin line **470** and fed through a NOR gate **565**, inverter **567** and lines **568** and **569** to input pin **9**. Phase three of the clock is also connected to NOR gate **565** along lines **571** and **572**. The ouput of NAND gate **563**, pin **8** is connected with line **575** to input pin **13** of negative input NOR gate **545** to direct set the carrier return enable flip flop **33** as discussed above. Therefore, if carrier returns are stored in the carrier return counter **100**, one for normal, or two in the case of legal form, this causes the system to execute the carrier returns before the system is de-energized when an end of page code or the like is received.

The second input to negative input NOR gate **561** on input pin **2**, originates from NAND gate **576**, output pin **12**, and is connected to negative input NOR gate **576** along line **578**. The three inputs to NAND gate **576** are designated "column 3", on input pin **13**, "read buffer 1", on input pin **1** and "read buffer 2" which is inverted with inverter **580** and connected to input pin **2** of NAND gate **576**. If these signals enable NAND gate **576** it also sets the carrier return enable flip flop **33** to cause execution of any carrier returns in the carrier return counter **100** prior to stopping the system from operating. If each of these signals is present it indicates that the tape in the tape cassettes is being rewound to go to the beginning. Therefore the operator no longer wishes the edit to function. It is one indication of the cessation of operation.

Similarly, if a stop code is present on input line **582** which is connected to NAND gate **585** and no recognition code, indicating the beginning or end of a recorded line of copy, is present in input line **584**, the absence of a recognition code being a high signal, NAND gate **585** will be fully enabled upon the occurrence of phase **3** of the clock connected with input line **571** to input pin **4** of NAND gate **585**. This also indicates a cessation of operation due to the stop code and the output on pin **6** of the NAND gate **585** is inverted with NOR gate **464** and connected with line **465** to the clock input of the carrier return flip flop **33**. Connection to the clock input pin will convert only stored carrier returns to spaces if the carrier return occurs in the body of the text or will execute any stored carrier returns from the carrier return shift register **100** if in the zone.

The operator's choice as to whether or not the typed form of the finished copy will be in legal or in normal form is determined by depression of a legal switch (not shown). This produces a signal on input line **402** which is connected with line **588** to input pin **3** of a select gate **590**. That signal is also inverted with inverter **404** and connected with lines **405** and **592** to input pin **5** of the second integral gate input to select gate **590**. As explained above the signal is also connected from inverter **404** with lines **405** and **406** to input pin B of carrier return shift register **100**. If the signal on input line **402** is low this indicates that the system is in legal mode of operation; if it is high this indicates that the system is in the normal mode of operation.

The second shift register output of the carrier return shift register **100**, designated QB on output pin **14**, is connected with line **595** to input pin **2** of the first integral NAND gate of the select gate ted QB on output pin **14**, is connected with line **595** to input pin **2** of the first integral NAND gate of the select gate **590**. The third register output of the carrier return shift register **100**, designated QC on output pin **13**, is connected with line **596** to input pin **4** on the second integral NAND gate of select gate **590**. Consequently, two carrier returns will be enabled through the first integral NAND gate of select gate **590**, output pin **6**. And, if the legal switch is depressed, three carrier returns will be enabled from the third output of the carrier return shift register **100** through the second integral NAND gate of select gate **590**.

When the correct number of carrier returns are registered the output of select gate **590** will remain low until the carrier returns are executed. The output of select gate **590**, pin **6**, is connected with line **598** to input pin **9** of negative input NOR gate **600**. When the output of negative input NOR gate **600**, pin **8**, goes high this is connected with line **602** to input pin **4**, or the J input, of the carrier return counter flip flop **33**. The flip flop is clocked on phase **5** of the clock which is connected, as described above, from input line **457**, along line **460** to inverter **462** line **463** NOR gate **464** and line **465** to input pin **1** or the C input of the carrier return counter

flip flop **33**. When the carrier return counter flip flop **33** is clocked output pin **15**, the Q output, will go high which starts the carrier return sequence.

Clock control will be turned off to prevent further action from taking place while carrier returns are inserted. This is accomplished from output pin **15** along line **109**, through NAND gate **605**, the output of which on pin **3** is connected with line **606** to input pin **10** of NAND gate **608**, the output of which controls the clock on output line **610**. The second enable on NAND gate **605**, input pin **1**, is connected with line **612** to the read indicator input on line **614** and the second enabling input to NAND gate **608**, input pin **9**, is connected along line **616** to the output of NAND gate **620** which is enabled on phase **1** of the clock along lines **116, 622** and **623** to input pin **13** of the NAND gate **620**.

The high output on the carrier return counter flip flop of pin **15** is also connected with lines **109** and **110** to the D input of the zone inhibit flip flop **34** so that the flip flop **34** can be clocked on the trailing edge of the carrier return enable signal from NOR gate **464**. Finally the carrier return enable flip flop **33** output on pin **15** is connected along lines **109, 110** and **111** to NAND gate **107**, input pin **4**, the output of which on pin **6** is connected with lines **114** and **487** to inverter **489**. The high output on pin **2** of inverter **489** is connected to NAND gate **550**. The second input to NAND gate **550** is connected with lines **552, 554** and **556** to phase **6** of the clock. Therefore the output of NAND gate **550** will go low on phase **6** of the clock for one pulse. This is connected to output line **557** which inserts carrier returns on the tape and in the typed material.

In addition, the output of inverter **489** is connected with line **626** to input pin **11** of NOR gate **533** the output of which is connected with line **535** to inverter **536** which is connected to the S1 input, pin **10**, of the carrier return shift register **100**.

Therefore every time that a carrier return is inserted the carrier return shift register **100** will shift one left or count one carrier return back. When the shift register **100** counts one carrier return back this will of course take the high signal off the J input of the carrier return counter flip flop **33**, input pin **4**. However, the K input of pin **16** will still be low and thus the system will not be cleared.

The signal to the K input on pin **16** of the carrier return counter 3E is connected with line **455** to output pin **12** of NOR gate **450**. The three inputs to NOR gate **450** are indications that there is at least one carrier return loaded in the carrier return shift register **100**, that a carrier return is indicated by the signal on input line **410** or that a tab or carrier return has been recorded in conjunction with the keep key indicating that it should be kept. The carrier return loaded signal originates from the QA output or first register of the carrier return shift register **100** and is connected from output pin **15** along lines **103** and **104** to input pin **13** of NOR gate **450**. The carrier return signal is connected along lines **410, 435, 436** and **437** to inverter **440**, the output of which is connected with lines **442, 443** and **444** to input pin **2** of NOR gate **350**. The third input, on pin **1** originates from NOR gate **628**, the inputs to which on pins **5** and **6** are tab and carrier return respectively. The tab input is connected from the input line **630** through inverter **632** and along line **634** to input pin **5** of NOR gate **628**. The carrier return indication is connected from the output of inverter **440**, discussed immediately above, along lines **442** and **636** to input pin **6**. The output of NOR gate **628**, on pin **4**, is connected with line **638** to input pin **3** of NAND gate **640**. The second input to NAND gate **640**, on pin **2**, is connected to input line **425**, which an alphanumeric character or a keep signal, with lines **470, 471** and **642** to input pin **2**.

The combination of the keep signal with the carrier return in addition to being fed through NOR gate **450** to carrier return counter flip flop **33** to prevent it from being cleared is also connected with line **644** to inverter **658**, the output of which is connected with line **650** to negative input NOR gate **600**, input pin **10**. As explained above, the output on pin **8** of negative input NOR gate **600** will set the carrier return enable flip flop **33**, on input pin **4** in the event no carrier returns had been earlier detected. Therefore if only one carrier return which is to be kept is detected by the circuitry it is not necessary to have any carrier returns enabled by the flip flop **33**, or stored in the carrier return shift register **100** in order to execute carrier returns. The combination of a keep signal in conjunction with the carrier return signal will automatically, in the manner described above, set the carrier return enable flip flop **33** to begin execution of the carrier returns. In addition, since the circuitry has been set, in the event there are carrier returns following the kept carrier return they will automatically be kept due to the presetting of the carrier return enable flip flop **33** and, thus, it is only required to depress the keep key with the first carrier return of a series of carrier returns to, for example, start a new paragraph.

Additional flip flops are provided as shown in FIG. **2**, in particular FIG. 2d. Two flip flops are designated "hold for delete" and "hold for insert" and the third flip flop is designated "insert clock control". The hold for insert flip flop **41** and the insert clock control flip flop **654**, connected thereto, prevents the system from advancing the read buffer (not shown) while carrier returns, spaces or the like are being inserted. The hold for delete flip flop **40** prevents the system for typing while the right hand margin adjust system is deleting characters or is looking ahead to the hot zone to precondition the system for operation as determined by the characters in the hot zone. Under normal situations the hold for delete flip flop **41** will not be utilized because the operating time of the system is substantially faster than the reaction time of the typewriter.

The hold for delete flip flop **40** is conditioned on input pin **2**, or the D input of the flip flop **40**, by the special characters to be deleted, each of which constitutes an input to negative input NOR gate **656**, described more fully below. The output of that NOR gate **656** on pin **8** is connected with lines **658** and **659** to input pin D of the hold for delete flip flop. The flop **656** is clocked by phase **7** of the **8** phase clock which is connected to the C input of the flip flop **656** along lines **660** and **661** to input pin **3**. After the flop **656** has been clocked the lower output on output pin **6** is connected with line **663** to a negative input NOR gate **665** the output of which is connected with line **667** to input pin **13** of a NAND gate **670**.

The second input to NAND gate **670** is connected to the phase **5** clock pulse along line **673** to the output of NAND gate **675**. Therefore on phase **5** of the clock the output of pin **11** of NAND gate **670** will go low which is connected to output line **676** to hold the read clock.

This allows a read circuit (not shown) to check for recognition codes.

The read clock is also held by the output of the hold for insert flip flop **41**. The hold for insert flip flop **41** is conditioned on input pin **12**, or the D input, from the output of NOR gate **680** connected to the flip flop **41** by line **681**. The input to NOR gate **680**, on pin **5**, is the space command indicating that one or more spaces should be inserted in the typed copy and on the tape to replace a deleted carrier return. This signal is connected to input pin **5** of the NOR gate **680** along lines **682** and **684** from the output of a NAND gate **686**, pin **6**. The input to NAND gate **686** is the space command signal, which is connected from input line **688** through inverter **690** and lines **691** and **692** to input pin **4** of the NAND gate **686**.

The second enabling input to negative input NAND gate **686** is a signal indicating that a signal carrier return has been detected which therefore must be replaced by one or more spaces. The face that one carrier return is loaded into the shift register **100** is connected from the QA output of the shift register **100**, pin **15**, to input pin **4** of a NAND gate **692** along lines **694**, **695** and **696**. The high signal indicating that the carrier return enable flop **33** has not be set is connected from output pin **14** along lines **698**, **700** and **701** to input pin **5** of NAND gate **692**. The fact that the character currently in the buffer is not a carrier return is connected from the carrier return input line **410**, along lines **435**, 436 and **704** to pin **3** of NAND gate **692**. The resulting low output fully enables NAND gate **686** to condition the hold for insert flip flop **41** through NOR gate **680** and partially enables NAND gates **707** and **709** so that the space or spaces may be inserted on output line **710** and to clear the carrier shift register **100** on input pin **1**. Additional gates, discussed more fully below, partially indicating that the next character is not kept, are provided to insert the space and clear the carrier return shift register **100** on the phase six clock pulse. These are inverter **712**, NAND gate **716** and NAND gate **720** which fully enable NAND gate **709** to clear the carrier return shift register through NOR gate **724** and insert spaces through NAND gate **707** which is fully enabled on the phase six clock pulse when the signal on NAND gate **686** is high.

The second input to NOR gate **680** is the carrier return insert signal discussed above. This is connected from the output of inverter **489** along lines **728**, and **730** to input pin **6** of NOR gate **680**. The hold for insert flip flop **41** is clocked on phase **6** of the **8** phase clock which is connected from input line **552** along lines **554**, 732 and **733**, through NOR gate **538** and along lines **540** and **735** to input pin **11** of the hold for insert flip flop **41**. In addition to holding the read clock on line **676** and providing the signal to insert the appropriate character on line **737** the hold for insert flip flop **41** also conditions a second flip flop **654** which upon a clocking impulse from the typing system, designated "load strobe", to input pin **3** of the flop **654** initiates the edit run signal from output pin **5** of the flop along line **739** through NOR gate **742** to the output signal designated "edit run". Thus, after a load strobe has been received from the typing system indicating that the applicable characters have been inserted the printing mechanism is again ready to accept additional printing commands. The system is returned to operating condition wherein the clock is operating so additional characters may be checked, for the purpose of editing or adjusting the right hand margin.

Other conditions which initiate edit run for the purpose of checking the additional characters and also which set the hold for delete flip flop **40** while the right hand margin adjust feature is checking additional characters to make the determination of whether or not spaces, carrier returns or the like will be deleted, are connected to a negative input NOR gate **656**. For example, if a carrier return is detected it will either be deleted and replaced with a space if in the body of the text or it will be executed if it is followed by one or two additional carrier returns indicating the start of a new paragraph. Therefore upon the initial detection of a carrier return the hold for delete flip flop **40** will be conditioned and clocked and the edit run sequence will be initiated to determine whether or not the carrier return is followed by additional carrier returns. This is accomplished through NOR gate **656**.

The input to input pin **12** of negative input NOR gate **656** is the carrier return loaded signal from the carrier return shift register **100** which is obtained from the QA output on output pin **15** and connected with line **103** to NAND gate **750**, the low output of which is connected with line **752** to NOR gate **656**. The other enabling signals to NAND gate **750** are the detected carrier return signal from the output of inverter **400** which is connected with lines **442**, **443** and **446** to input pin **13** of NAND gate **750** and the carrier return NOR enabled signal which is connected from the output of the carrier return enable flip flop output pin **14** along lines **698**, **700** and **754** to input pin **2** of NAND gate **750**.

The input on pin **9** of NOR gate **656** indicates that there is not a carrier return nor an alphanumeric character in the read buffer. Initiation of this signal runs the clock ahead to get rid of unwanted spaces and the like up to the point that either an alphanumeric character or another carrier return is detected, after a carrier return has been inserted. The carrier return or alphanumeric characters are detected on input lines **410** and **425** through negative input NOR gate **428**, input pins **1** and **2** respectively. The output on pin **3** is connected with lines **486** and **756** to input pin **9** of negative input NAND gate **430**, the other enabling input being from the print character flip flop **30** and the zone memory shift register **270** indicating that there are one or more editable characters in the zone. These inputs are connected to input pin **8** of negative input NAND gate **430** through NAND gate **499**.

The output of negative input NAND gate **430**, pin **10**, is connected with lines **497** and **758** to input pin **3** of NOR gate **760** which is connected with line **762** to input pin **9** of the four input negative input NOR gate **656**. Similarly, the space command is connected to the second input of NOR gate **760** through negative input NAND gate **764** in conjunction with the hold for insert flip flop **41** the low output of which on pin **8** is connected with line **766** to the second input of NAND gate **764**, input pin **9**.

Connected to pin **13** of the negative input NOR gate **656** is an indication that the carrier return shift register **100** is not full and thus the typing is not at the end of a paragraph. Additional inputs also indicate that the character being interrogated is not an alphanumeric character, characterized by a data bit **7**, that the keep key has not been depressed, and that a tab is the character being interrogated. Consequently, as explained

above, the tab is deleted and the circuitry is stopped so that the operator can reset the tab.

These signals are connected to input pin **13** through NAND gate **770** with line **768.** The three input signals to NAND gate **770** are the tab signal on input line **630** connected through inverter **632** to input pin **10.** The signal indicating that neither a keep key nor an alphanumeric character has been interrogated is connected to input pin **11** from input line **423** along lines **470** and **774** and the carrier return signal from the output of the carrier return enable flip flop **33** pin **14,** along lines **698, 700, 754** and **780** to input pin **9** of NAND gate **770.** The typing system is stopped with the circuitry shown in FIG. **1,** particularly the zone stop flip flop **370.**

The last situation which initiates edit run to check following characters is the input to pin **10** which is initiated by the occurrence of a hyphen which sets the hyphen flag **76.** This signal is connected from input line **480** to input pin **10.** As explained above, if the hyphen is followed by an alphanumeric character and is not a kept hyphen it is deleted.

The hyphen flag signal is also connected along the same line **480** to the input of positive input NAND gate **452** which functions to shift the carrier return shift register **100** to indicate the occurrence of a carrier return. NAND gate **452** is fully enabled if the hyphen flag signal is high, indicating that there is not a hyphen flag, and the carrier return enable flip flop **33** set, which is indicated on input pin **1** from the output of the carrier return flip flop **33** along lines **698, 700, 754** and **783,** that a carrier return signal has been detected, which is connected to pin **5** from output of inverter **440** along lines **442, 443, 446** and **447,** and the keep key has not been depressed, that signal being on input line **425** and connected to input pin **2** of NAND gate **452** along lines **470, 471** and **472.** Therefore, in the event all four inputs to the NAND gate are enabled it indicates that a carrier return has been detected which is not followed by a hyphen nor is the carrier return to be kept. The output of NAND gate **452** is connected with line **788** to input pin **5** of negative input NOR gate **520** which shifts the carrier return shift register **100** one register to the right to delete the carrier return.

The additional inputs to NAND gate **750,** which as explained above initiates edit run through NOR gates **656** and **790,** is an indication that a carrier return has been loaded, obtained from the carrier return shift register **100,** QA output, pin **15,** which is connected to input pin **13** of NAND gate **750** with line **103,** and the carrier return flip flop **33** output on pin **2.** When all three of these signals are high they fully enable the NAND gate **750** and the carrier return is executed even though it is only one carrier return because it was the end of the typing in the initial format.

The QA indication indicating that a carrier return is loaded is also connected to NAND gate **563,** input **11** which is ANDed with the end of page signal on input line **560** to execute any remaining carrier returns after the end of the page.

Finally, the QA indication is also connected to NAND gate **692** pin **4.** The input to pin **5** of the NAND gate **692** indicates that a carrier return is not enabled from the output of the carrier return flip flop, output pin **14,** and lines **698, 700** and **701.** Therefore,, the output on pin **6** will go low which, if the space command is high on input pin **4** of NAND gate **686,** will make the output of negative input NAND gate **686** low. The low output on pin **6** of NAND gate **692** is also inverted with inverter **712** and connected to input pin **3** of NAND gate **716.** This is connected to NAND gate **720** from output pin **6** to input pin **12.** The second enabling input to NAND gate **2A** is the phase **6** clock pulse which is connected to input pin **13** from the phase **6** clock input line **552** along line **794.** That output, on pin **11,** fully enables the negative input NAND gate **709** which creates a space. That output clears the carrier return counter and a space is inserted. The space is inserted due to NAND gate **707** which is also partially enabled by the phase **6** clock pulse from input line **552** along lines **554, 732** and **796** to input pin **4** and fully enabled by the second input originating from pin **6** of negative input NAND gate **686** along lines **682** and **683** to input pin **5.**

Finally, the output of pin **6** of negative input NAND gate **686** also conditions the hold for insert flip flop **41** along lines **682, 683, 684,** NOR gate **680** and line **681** to the D input, pin **12** of the hold for insert flip flop.

After the space command, input pin **5** of NAND gate **716** will go high and pins **3** and **4** will be high. Therefore, pin **6** will go low which is connected with lines **798** and **799** to input pin **12** of negative input NOR gate **800** the output of the NOR gate is connected to an inverter **802** along line **805.** The output of the inverter **802** is connected with line **804** to negative input NAND gate **764** which is fully enabled by the low output of the hold for insert flip flop **41** along line **766.** The output of negative input NAND gate **764** is connected with line **807** to input pin **2** of NOR gate **760** the output of which, is connected with line **762** to input pin **9** of negative input NOR gate **656** which initiates an edit run output to look ahead for the next character.

In the manner described above the body and the hot zone prior to the right hand margin are sequentially interrogated and adjusted to reformat the original material in accordance with the objectives of the invention as exemplified by the sequence sheets first described.

To fully indicate the sequential operation of the circuitry, reference may be had to the flow sheet designated FIG. **3.** The marginal references are to be controlling parameter or signals from FIGS. **1** and **2.** The following typing pattern will be traced and it should be obvious that any of the sequences listed on the sequence sheet or any other chosen sequence may be similarly traced. In the examples the marks indicate the sixth character hot zone and an asterisk represents a carrier return.

For purposes of illustration assume that the Pledge of Allegiance is originally typed and recorded with margin settings of **15** on the left and **85** on the right. This would appear as follows:

```
                                                  ''''''
I pedge allegiance to the flag of the United States of
America and*
to the republic for which it stands, one nation, under
  God, indiv-* isible, with liberty and justice for all.**
                                                  ''''''
```

If, thereafter, the right margin was changed from **85** to **75** and the tape was retyped, with the adjust feature energized, the right margin for the first sentence would then end after the sixtieth character in the line, or after the letter *i* in America and the hot zone prior to the right hand margin would begin after the letter *f* in the second occurrence of the word "of" in the first sentence of the Pledge.

Referring now to FIG. 3, the first letter in the read buffer would be the letter I. The adjust feature would be on. An end of page code would not be detected. A stop code would not be detected. A tab would not be detected. A line return would not be detected. The system would not be operating in the zone. A hyphen would not be detected. The hyphen flag would therefore not be set. A kept hyphen would be be detected. A sentence ending punctuation mark would not be detected. A space kept space would not be detected. The carrier return counter would not be full. A kept carrier return would not be detected. A kept tab would not be detected. A carrier return would not be detected. The typing would not be in the zone. The carrier return counter would be empty and thus the system would print the letter I and bring the next typing character into the read buffer decoder position which would be the space. The spacer counter would equal zero. The adjust stop would not be set. Therefore, more tape would be read into the **200** character buffer if needed and the cycle would continue.

The adjust would be on. An end of page code would not be detected. A stop code would not be detected. A tab would not be detected. A line return would not be detected. The zone switch would not be detected. A hyphen would not be detected. A hyphen flag would not be detected. A kept hyphen would not be detected. Sentence ending punctuation would not be detected. A space would be detected. Therefore, the space counter would be incremented by one to indicate one space in the space counter, that space would be printed and the next character would be entered in the read buffer which would be the letter *p*. The adjust stop would not be set and, thus, more tape would be read into the **200** character buffer if necessary and the cycle would continue.

This cycle would continue throughout the typing in the first line of the Pledge until the zone switch is made after the letter *f* in the second occurrence of the word of. The first character after the letter *f* is a space. Therefore, the adjust would be on. An end of page code would be not detected. A stop code would not be detected. A tab would not be detected. A line return would not be detected. Entry into the zone would be detected. Therefore, the read recirculate control fip flop, **171** on FIG. **1**, would be set. The end of the zone would not be detected. A space which is not kept would be detected. Thus, the margin counter insert memory shift register **270** in FIG. **1**, would be incremented by one, the insert flag, hold for insert flip flop **41** in FIG. **2**, would be set and the read clock **1** signal would go high. The zone recycling counter would be incremented by one and the **200** character buffer would be shifted one. The next character, being the letter A in America, would be brought to the read buffer decoder position. The end of the buffer would not be detected. The end of the zone would not be detected. The letter A is neither a space which is not kept nor a carrier return nor a carrier return which is kept. Thus, the zone counter would again be incremented and the **200** character buffer would be shifted and the letter *m* would be brought to the read buffer decoder position. This would continue until the end of the zone is detected after the letter *i* in America.

When the end of the zone is detected, the read buffer would be recirculated for the balance of the 200 characters so that the space would again be in the read buffer decoder position. The margin counter would not equal zero because of the first space which was detected. A space would be in the read buffer decoder position, therefore, one would be subtracted from the margin counter on phase 6 of the clock. A neither a carrier return nor kept carrier return would be detected. The margin counter would now equal zero. Neither a carrier return nor a kept carrier return would be detected. A 7 bit, indicating an alphanumeric character, would not be detected, nor any indication that the keep key was depressed. Therefore, the next character, the letter A in America, would again be brought to the read buffer decoder position. More tape would be entered into the 200 character buffer if necessary. The letter A is not a carrier return nor a kept carrier return. The letter A is an alphanumeric character indicated by the read buffer 7 data bit. Therefore, the carrier return counter would be loaded with one carrier return if the Pledge is being typed in a normal typing style or two carrier returns if the Pledge is being typed in a legal typing style. The carrier return enable flip flop **33** in FIG. **2**, would be set on phase **5** of the eight phase clock. The carrier returns would be executed on phase 6of the eight phase clock. The zone flop and adjust stop flip flops would be cleared. Since the letter A would still be in the read buffer decoder position neither a carrier return nor a kept carrier return nor a kept tab would be detected. Therefore, the carrier return flag would be cleared. The adjust stop would not be set. More tape would be read into the 200 character buffer, if required, and with the letter A still in the read buffer decoder position the system would initiate editing the second line of the Pledge beginning with the word America.

The second line would proceed from the word America in the same manner as described above until the letter *d*, the last letter in the word and, is in the read buffer. Starting from the start position, the carrier return would be deleted and replaced by one interword space in the following manner.

The adjust would be on. An end of page code would not be detected. A stop code would not be detected. A tab would not be detected. A line return would not be detected. The typing system would not be operating in the zone. A hyphen would not be detected. The hyphen flag would not be set. A keep hyphen would not be detected. Sentence ending punctuation would not be detected. A space or a kept space would not be detected. The carrier return counter would not be full. A kept carrier return would not be detected. A kept tab would not be detected. A carrier return would not be detected. The system would not be operating in the zone. The carrier return counter would be empty. Therefore, the letter *d* would be printed and the carrier return would be brought to the read buffer decoder position. The space counter would equal zero. The adjust stop flip flop would not be set. Therefore, more tape would be read if necessary and the cycle would begin again.

The adjust feature would be energized. An end of page code would not be detected. A stop code would not be detected. A tab would not be detected. A line return would not be detected. The system would not be operating in the zone. A hyphen would not be detected. The hyphen flag would not be detected. A kept hyphen would not be detected. Punctuation would not be detected. A space or kept space would not be detected. The carrier return counter would not be full. A kept

carrier return would not be detected. A kept tab would not be detected. A carrier return would be detected. Therefore, the carrier return counter would be incremented by one on phase **6** of the eight phase clock. More tape would be read if necessary and the next character which would be the letter *t* in the word to would be brought to the read buffer decoder position on the phase 1 clock pulse. Thereafter, the carrier return counter would not be full. A kept carrier return would not be detected. A kept tab would not be detected. A carrier return would not be detected. The system would not be operating in the zone. The carrier return counter would not be empty. A punctuation flag would not be detected. The space counter would equal zero. Therefore, a space would be generated on phase **6** of the eight phase clock. The system would not be operating in the zone. A digit **7**, indicating an alphanumeric character would be detected due to the letter *t* which would be presently in the read buffer decoder position. Therefore, the carrier return counter would be cleared on phase **6** of the eight phase clock. The space counter would also be cleared on phase **6** of the clock and the punctuation flag would be cleared on phase **5** of the clock. The adjust stop flip flop would not be set. More tape would be obtained to fill the 200 character buffer if necessary and the system would continue to reproduce the second line of the Pledge until the zone switch is energized which would occur after the letter *a* and prior to the letter *t* in nation. In the manner described above for the first sentence, the space following the comma following the word nation woul be utilized for a carrier return and the space would be deleted.

The third line of the reformated copy would then begin with the word under and the system would operate as described above until the *v* in individual would be present in the read buffer decoder position. Referring to FIG. **3**, at the start of the sequence the adjust feature would be energized. An end of page code would not be detected. A stop code would not be detected. A tab would not be detected. A line return would not be detected. The system would not be operating in the zone. A hyphen would not be detected. Sentence ending punctuation would not be detected. A space or a kept space would not be detected. The carrier return counter would not be full. A kept carrier return would not be detected. A kept tab would not be detected. A carrier return would not be detected. The system would not be operating in the zone. The carrier return counter would be empty. Therefore, the letter *v* would be printed and the hyphen would be brought to the read buffer decoder position. The space counter would equal zero and the adjust stop flop would not be set. Therefore, more tape would be read, if necessary, and the sequence would begin to edit the hyphen.

The adjust feature would be energized. An end of page code would not be detected. A stop code would not be detected. A tab would not be detected. A line return would not be detected. A zone would not be detected. The hyphen would be detected. Therefore, the hyphen flag would be set on phase 5 of the clock. The hyphen flag would be detected. Therefore the carrier return would be brought to the read buffer decoder position on phase 1 of the clock. More tape would be read if necessary. The carrier return would not be a kept carrier return nor would it be an alphanumeric character which is not a hyphen. Therefore, the next character, which would be the letter *i*, would be brought to the read buffer decoder position on phase 1 of the clock. More tape would be read if necessary. An alphanumeric character which is not a hyphen would be detected and therefore, the hyphen flag would be cleared on phase 5 of the clock. With the letter *i* still in the read buffer decoder position the sequence would continue. A keep hyphen would not be detected. Punctuation would not be detected. A space or a kept space would not be detected. The carrier return counter would not be full. A kept carrier return would not be detected. A kept tab would not be detected. A carrier return would not be detected. The system would not be operating in the zone. The carrier return counter would be empty. Therefore, the letter *i* would be printed and the next letter, the letter *s*, would be brought to the read buffer decoder position on the first phase of the clock. The space counter would continue to equal zero. The adjust stop would not be set. Therefore, the third line of the Pledge would be continued in the manner described above and both the hyphen and the carrier return would have been deleted in the retyped copy.

The third line would be continued until the zone margin switch would be energized which would occur between the letters *l* of the word all. With the last letter *l* in the read buffer decoder position, which would be in the first position of the zone, the system would operate as follows. The adjust feature would be energized. An end of page code would not be detected. A stop code would not be detected. A tab would not be detected. A line return would not be detected. The system would be operating in the zone. Therefore, the read recirdulate signal would be set. The end of the zone would not be detected. The letter *l* would not be a space which is not kept nor a carrier return nor a kept carrier return. Therefore, the zone counter would be incremented as well as the **200** character buffer. The next character would be brought to the read buffer code position which would be the period.

The end of the buffer would not be detected. The end of the zone would not be detected. The period would not be a space which is not kept nor a carrier return nor a kept carrier return. The zone counter would be incremented again as well as the 200 character read buffer. The first carrier return would be brought to the read buffer decoder position.

The end of the buffer would not be detected. The end of the zone would not be detected. The carrier return would be detected. Thus, the margin counter would be incremented by 1 and the insert flag would be set. The zone counter and the 200 character buffer would both be incremented by one and the second carrier return would be brought to the read buffer deocder position.

The end of the buffer would not be detected. The end of the zone would not be detected. The second carrier return would be detected and thus the margin counter would again be incremented by one. The zone counter and the 200 read buffer would also be incremented by one, to bring either an end of page code or a stop code to the read buffer decoder position if these were initially indicated by the operator who recorded the Pledge with the wide margins. If not, a recognition code would be present signaling the end of the buffer. In either of these events, the end of the buffer would be detected and the 200 character buffer would be recirdulated to the beginning of the zone or to where the last

l in the word all is present in the read buffer code position.

The margin counter would equal 2 and therefore would not equal zero. The letter *l* would not be a space nor a carrier return nor a kept carrier return. A tab would not be detected. Therefore, the letter *l* would be printed and the period would be brought to the read buffer decoder position. A period would not be a space or a carrier return or a kept carrier return. There would not be a tab, therefore, the period would be printed and the first carrier return would be brought to the read buffer decoder position. The carrier return would be detected and thus one would be subtracted from the margin counter on phase 6 of the clock. The carrier return would be detected and, therefore, the zone insert enable would be cleared on phase 7 of the clock. The carrier return counter would not be full. A kept carrier return would not be detected. A tab would not be detected. A carrier return would be detected, thus the carrier return counter would be incremented by one on phase 6 of the eight phase clock. More tape would be read into the 200 character buffer if necessary. The second carrier return would be brought to the read buffer decoder position on phase 1 of the clock.

The carrier return counter would not be full. The kept carrier return would not be detected. A kept tab would not be detected. The second carrier return would be detected. Thus the carrier return counter would be incremented to two on phase 6 of the clock. More tape would be read if necessary and the next character code would be brought to the read buffer decoder position on phase 1 of the clock, which would be the end of page code stop code or a recognition code as explained above.

The carrier return counter would now be full, therefore the carrier return enable would be set on phase 5 of the clock. Two carrier returns, or three, if legal typing style is chosen, would be executed on phase 6 of the clock. The zone flip flop and the adjust stop flip flop would be cleared. Neither a carrier return or a kept carrier return nor a kept tab would be detected. The carrier return flag would be cleared, the adjust stop flip flop would not be set and, therefore, the sequence would end with the end of page or stop code signals if indicated. Alternatively, if typing continued, the first letter in the next paragraph would be processed in the sequence and manner described above. Thereafter the reformated copy, as typed and recorded, would appear as follows:

,,,,,,

I pledge allegiance to the flag of the United States of*
America and to the republic for which it stands, one nation,*
under God, indivisible, with liberty and justice for all.**

,,,,,,

In general, while we have described a specific embodiment of our invention, it is to be understood that this is for the purposes of illustration only and that many various modifications can be made within the scope of the invention and that all such modifications are within the intendment of our invention.

We claim as our invention:

1. In an automated printing system of the type having:

information storage means containing coded character print commands which are to be reprinted in lines of characters having a different number of characters per line than originally recorded;

input means for recording the coded character print commands on the information storage means;

reading means to read the print commands from the information storage means; and

printing means for reproducing character print commands stored on the information storage means

the improvement comprising, in combination:

means for establishing a multiple character zone prior to the end of each line of characters to be reprinted;

means for detecting selected special character print commands read by the reading means;

means for distinguishing special characters which are to be printed in the multiple character zone from characters which are to be printed prior to the multiple character zone comprising

means to detect the beginning of the multiple character zone;

first logic means responsive to the means for distinguishing characters to be printed in the zone from characters to be printed prior to the zone for selectively executing prior to the multiple character zone certain of the print commands and for generating and executing other character print commands that are different than those originally recorded; and

second logic means responsive to the means for detecting the beginning of the multiple character zone for sequentially interrogating and analyzing a number of character print commands equal to the number of characters in the multiple character zone immediately prior to executing any character print commands to be printed in the multiple character zone, the second logic means being operatively connected to the first logic means so that the character print commands which are selectively executed and those which are generated and executed in the multiple character zone are determined by the second logic means whereby the information originally recorded can be printed in lines of characters which have a different number of characters per line than originally recorded.

2. The improvement of claim 1 further comprising means for detecting the end of the multiple character zone.

3. The improvement of claim 1 wherein the means for detecting selected special character print commands comprises means for detecting sentence-ending punctuation print commands.

4. The improvement of claim 1 wherein the means for detecting selected special character print commands comprises means for detecting hyphen print commands.

5. The improvement of claim 1 wherein the means for detecting selected special character print commands comprises means for detecting space print commands.

6. The improvement of claim 5 further comprising means for registering the number of space print commands detected by the second logic means and wherein if one or more space print commands are detected in the multiple character zone the last occurring space print command is not executed and one or more carrier return print commands are generated and executed by the first logic means.

7. The improvement of claim 1 wherein the means for detecting selected special character print commands comprises means for detecting carrier return print commands.

8. The improvement of claim 7 further comprising means for detecting the beginning of a new paragraph in the coded character print commands recorded on the information storage means wherein if a carrier return print command is detected which does not occur in the multiple character zone and which is not the beginning of a new paragraph the carrier return print command is not executed and one or more space print commands are generated and executed by the first logic means.

9. The improvement of claim 8 wherein the means for detecting selected special characters further comprises means for detecting sentence-ending punctuation print commands wherein if a carrier return print command is detected immediately following the detection of a sentence-ending punctuation print command which is not the beginning of a new paragraph and which does not occur within the multiple character zone the carrier return print command is not executed and two space print commands are generated and executed by the first logic means.

10. The improvement of claim 1 wherein the means for detecting selected special character print commands comprises means for detecting tab print commands.

11. The improvement of claim 10 further comprising inhibiting means responsive to the means for detecting tab print commands and operatively connected to the first logic means for inhibiting the first logic means from executing or generating any print commands if a tab print command is detected by the means for detecting tab print commands.

12. The improvement of claim 1 wherein the means for detecting selected special character print commands comprises means for detecting line return print commands.

13. The improvement of claim 12 further comprising inhibiting means responsive to the means for detecting line return print commands and operatively connected to the first logic means for inhibiting the logic means from executing or generating print commands if a line return print command is detected by the means for detecting line return print commands.

14. The improvement of claim 1 wherein the improvement further comprises a keep key operatively connected to the input means for recording a keep key code and keep key code detection means operatively connected to the first logic means and the second logic means for preventing the first logic means and the second logic means from selectively executing or generating and executing any of the selected special characters which are detected in conjunction with the keep key code detection means whereby any selected special character print command detected in conjunction with a keep key code is executed as originally recorded.

15. The improvement of claim 1 wherein the means for detecting selected special character print commands comprises means for detecting space print commands and means for detecting carrier return print commands and wherein the second logic means comprises means for registering the number of space unit commands and carrier return print commands which are detected by the second logic means and wherein the second logic means comprises means for causing a carrier return print command to be executed if it is detected in the multiple character zone or for causing a carrier return print command to be generated and executed and the last detected space print command not to be executed if one or more space print commands are detected but no carrier return print commands are detected by the second logic means.

16. The improvement of claim 1 wherein the reading means comprises memory means for storing the information read from the information storage means and wherein the second logic means comprises recirculating means connected to the memory means for recirculating the information in the memory means so that after the first interrogation of each of the characters in the multiple character zone by the second logic means each character print command is again interrogated by the reading means prior to printing and the character print commands are executed by the first logic means in accordance with logic of the second logic means.

17. The improvement of claim 1 further comprising clocking means for establishing a multiple phase clock and wherein the character print commands recorded on the information storage means are read, detected, and selectively executed, or generated and executed sequentially on different phases of the multiple phase clock by the first and second logic means.

18. The improvement of claim 17 further comprising means for controlling the operation of the clocking means including means for inhibiting the clocking means when special selected characters are being executed or generated and executed by the first logic means.

19. The improvement of claim 1 wherein the means for detecting selected special character print commands comprises means for detecting space print commands and means for detecting carrier return print commands and further comprising means for inhibiting the printing means if no space print commands or carrier return print commands are detected by the second logic means in the character print commands to be printed in the multiple character zone.

20. The improvement of claim 1 further comprising switching means having two positions for varying the printing style of the information reproduced by the printing means wherein one or more carrier return print commands are executed or generated and executed to produce a normal printing style if the switching means is in one position and two or more carrier return point commands are executed or generated and executed to produce a legal printing style if the switching means is in a second position.

* * * * *