United States Patent [19]

Lehman

[11] **4,238,774**

[45] **Dec. 9, 1980**

[54] **DRIVE CIRCUITS FOR A HIGH RESOLUTION CATHODE RAY TUBE DISPLAY**

[75] Inventor: **Frederick D. Lehman,** Rockford, Minn.

[73] Assignee: **CPT Corporation,** Eden Prairie, Minn.

[21] Appl. No.: **896,813**

[22] Filed: **Apr. 17, 1978**

[51] **Int. Cl.**[3] **H04N 5/68**

[52] **U.S. Cl.** **358/242;** 358/188; 340/728

[58] **Field of Search** 358/87, 88, 108, 109, 358/166, 230, 237, 242, 86, 184, 188; 340/728; 315/399, 370

[56] **References Cited**

U.S. PATENT DOCUMENTS

2,237,651	4/1941	Bruche	250/27
2,717,329	9/1955	Jones et al.	358/242 X
3,176,137	3/1965	Hofmann et al.	250/99
3,504,122	3/1970	Ratliff	358/88
3,559,085	1/1971	Ishijima	330/13
3,662,102	5/1972	Herndon	178/7.7
3,750,133	7/1973	Helbig et al.	340/324 AD
3,878,532	4/1975	Buck	340/347 AD
3,947,723	3/1976	Thompson	315/389

FOREIGN PATENT DOCUMENTS

1240190	7/1971	United Kingdom .
1486217	9/1977	United Kingdom .
1496900	1/1978	United Kingdom .

OTHER PUBLICATIONS

Proceedings of the Society of Photo-Optical Instrumentation Engineers, vol. 4, May 5, Oct. 1972.

Primary Examiner—Robert L. Richardson
Attorney, Agent, or Firm—Dorsey, Windhorst, Hannaford, Whitney & Halladay

[57] **ABSTRACT**

A dynamic new circuit is disclosed which permits an extremely high resolution cathode ray tube display. Utilizing this circuit, horizontal drive operating frequency may be increased by a factor of approximately four and video drive operating frequency may be increased by a factor of approximately ten. Improved circuits for horizontal drive, vertical drive, video drive and associated circuitry are disclosed which cooperate to produce a high frequency display which has unparalleled clarity and resolution.

37 Claims, 4 Drawing Figures

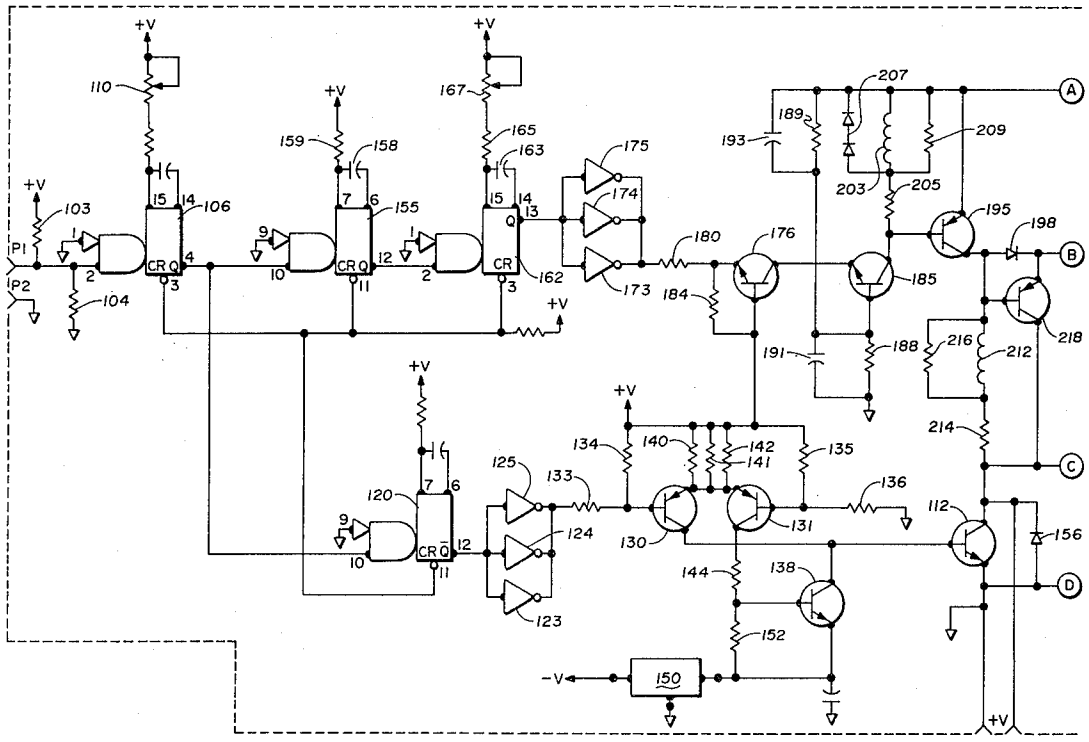

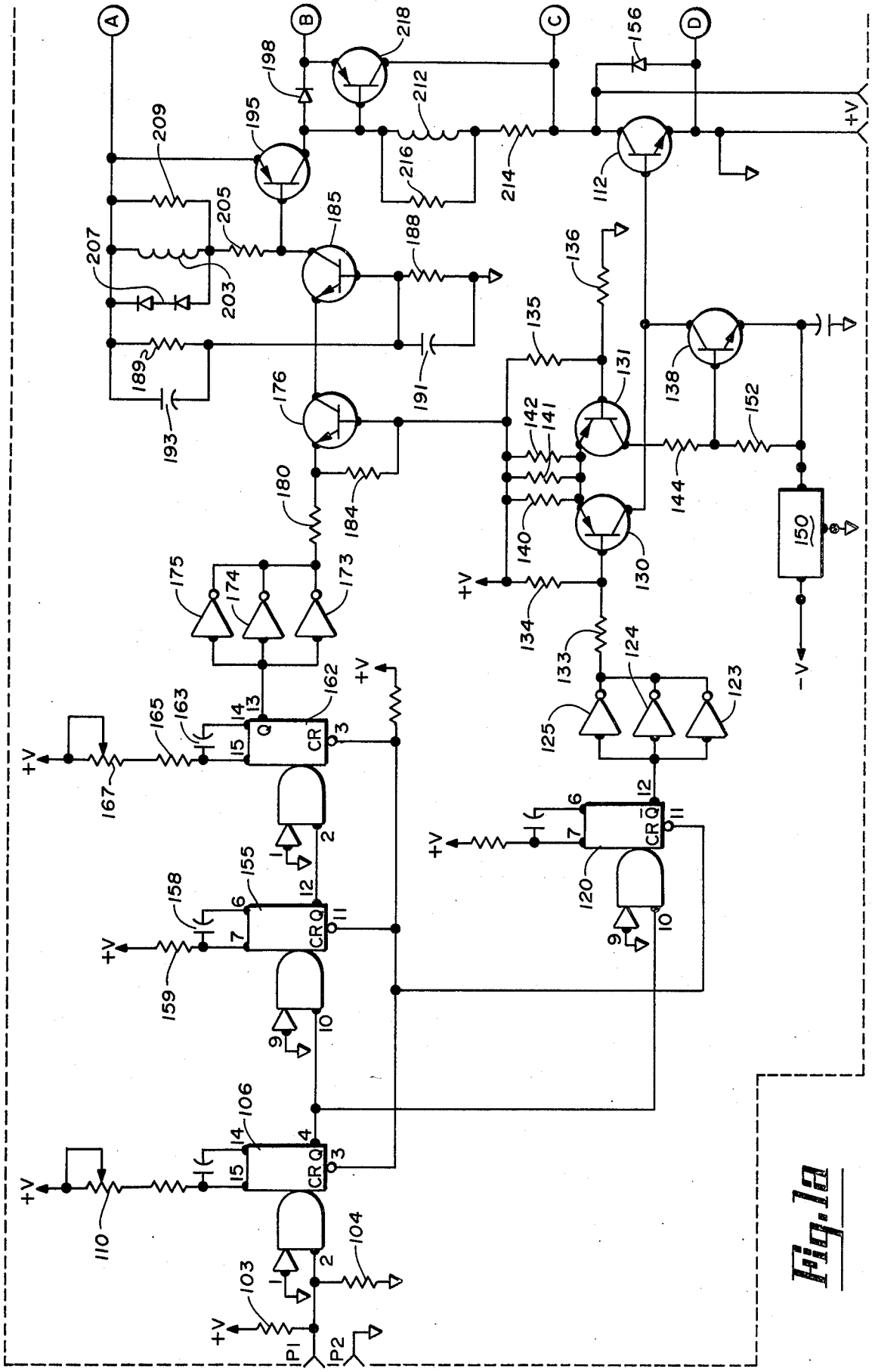

Fig. 1a

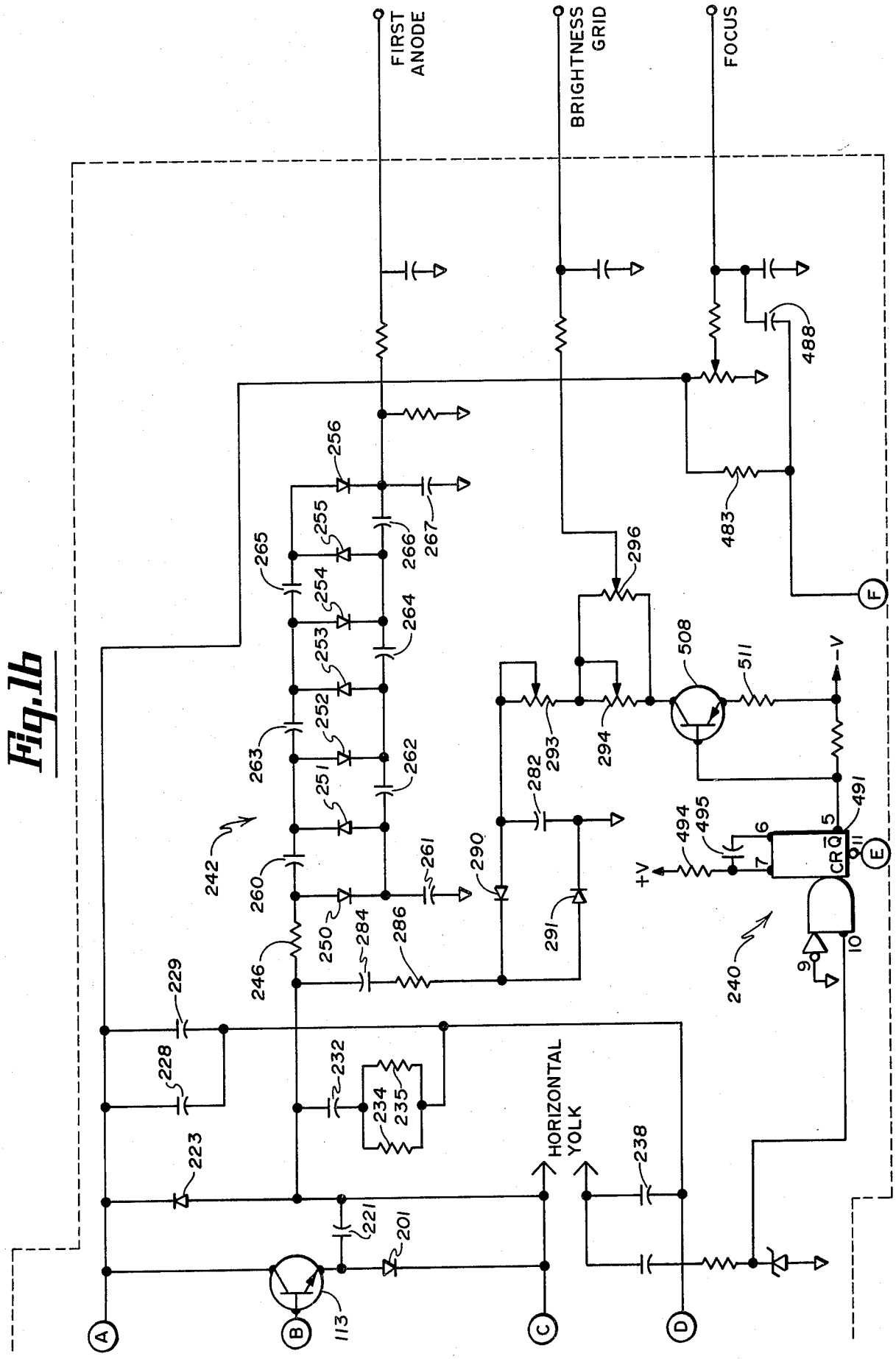
FIRST ANODE
BRIGHTNESS GRID
FOCUS
HORIZONTAL YOLK
A
B
C
D
E
F
+V
-V
CR
Q̄
242
240
113
201
221
223
228
229
232
234
235
238
246
250
251
252
253
254
255
256
260
261
262
263
264
265
266
267
282
284
286
290
291
293
294
296
483
488
491
494
495
508
511

Fig. 1b

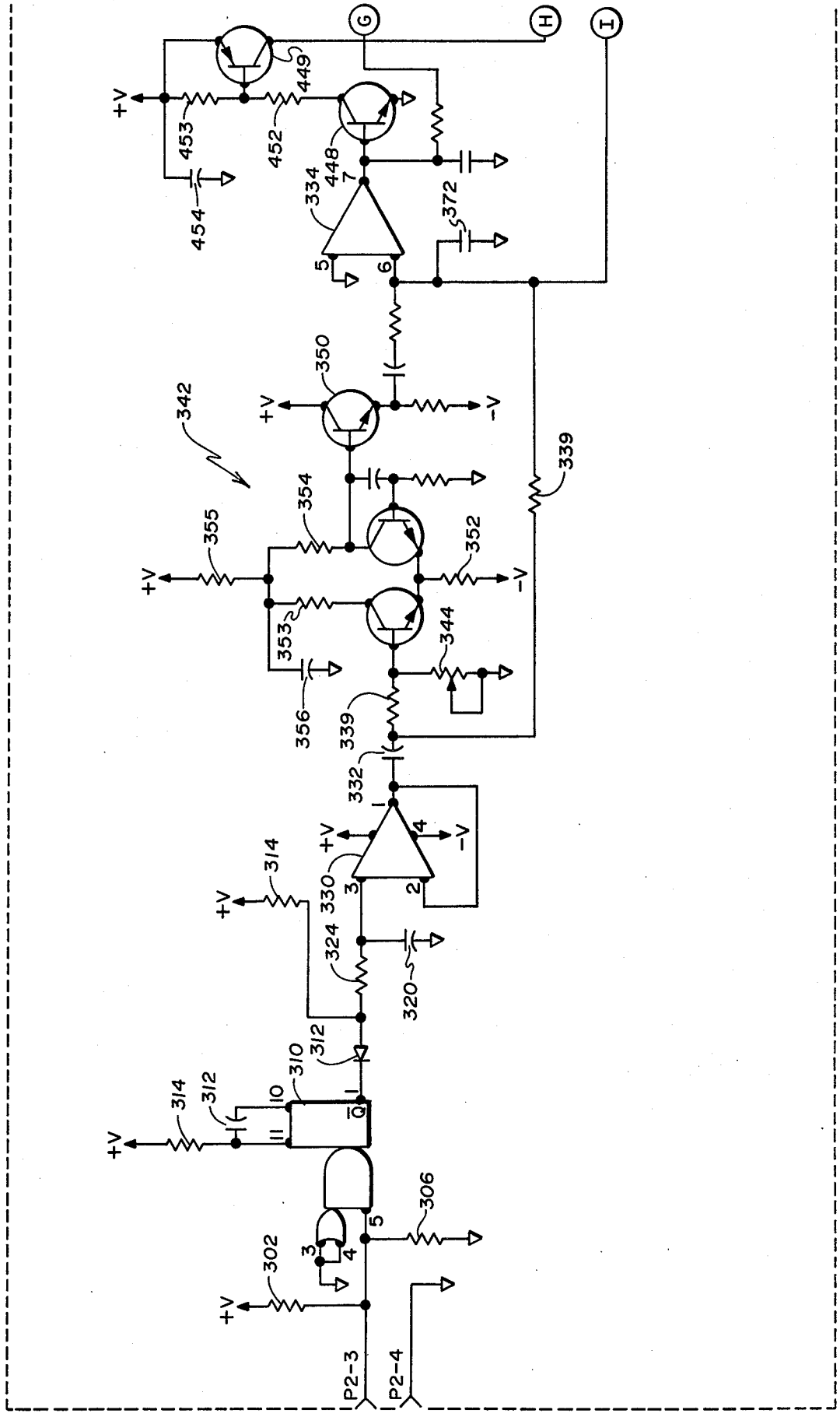
+V
-V
G
H
I
449
453
452
448
454
334
372
350
342
339
355
354
352
353
344
356
332
330
314
324
320
312
310
306
302
P2-3
P2-4

Fig.1c

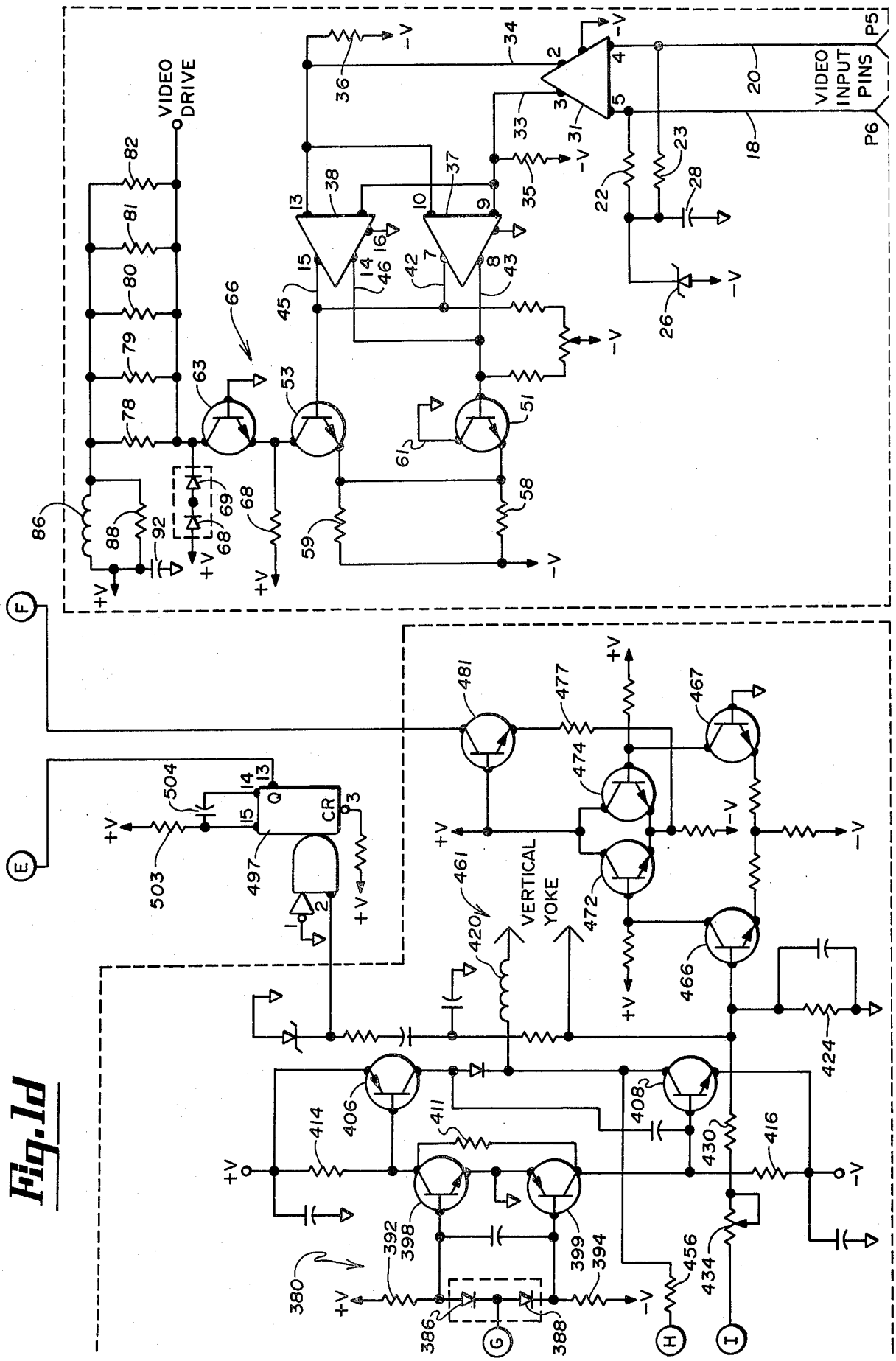

Fig. 1d

DRIVE CIRCUITS FOR A HIGH RESOLUTION CATHODE RAY TUBE DISPLAY

BACKGROUND OF THE INVENTION

This invention relates to display circuits for cathode ray tubes. Because of current circuit designs being utilized, conventional television monitors are operated at a horizontal drive frequency of about fifteen kilocycles. Conventional high speed monitors are operated with a video drive frequency of about twenty megacycles. It has been recognized repeatedly in the past that achievement of higher frequency operation would and could produce improved resolution.

This realization has produced some specific developments such as described in U.S. Pat. No. 3,878,532, which discloses a high frequency analog to digital conversion apparatus, to be used with a cathode ray tube having an apertured target member. Other attempts which have been made to vary the frequency response and thus improve resolution include patents such as U.S. Pat. No. 3,750,133 which teaches a method of rotating the deflection yoke of a cathode ray tube ninety degrees to provide fast vertical rather than fast horizontal sweeps.

While such incremental increases in frequency may provide incremental improvements in resolution, the total interaction of frequency response in the entire display circuitry has not been approached with an integrated design and selected improvements to individual circuit parameters have not produced a substantial improvement in overall resolution of cathode ray tube displays.

SUMMARY OF THE INVENTION

The present invention is a design for the display circuitry for a cathode ray tube which permits the operating frequency of the horizontal drive to be increased by a factor of four and the operating frequency of the video drive to be increased by a factor of ten. Using the circuits disclosed horizontal drive can be operated at a frequency of about fifty kilocycles and video drive can be operated at a frequency of two hundred megacycles. Complementary design changes are also disclosed for vertical drive circuitry.

The high frequency video drive signal is achieved using emitter coupled logic (ECL) coupled with discrete components in a circuit design which yields the high frequency response desired. An ECL differential amplifier driver is used as a high frequency receiver for the raster scan video input signal. The high frequency input signal is then converted to a high speed current signal with two ECL drivers connected in parallel and each connected to a two transistor current mode switch. A high frequency voltage output signal is created with a third transistor connected in a cascode arrangement with one of the transistors in the current mode switch. The output signal is critically damped and diode clamped to protect the output transistor. Means are also provided for dissipating power created within the circuit.

The high frequency horizontal drive circuit also uses high speed components to create a two-way scan circuit. Two transistors are connected to the horizontal yoke of the tube to cause sweep and retrace to occur. During normal operation the sweep transistor is on. Timing components are provided to receive, time and control the duration of retrace after receipt of a retrace sync pulse. First timing means establish a first timing interval. The first timing means are connected to an electronic switching circuit which controls the sweep transistor and turns it off during retrace.

The retrace sync pulse also turns the retrace transistor on causing a retrace scan to occur. This is accomplished with a second circuit means having a retrace timer which generates a time interval for retrace which is smaller in duration than the time interval during which the sweep transistor is off and which is initiated a finite time after the first time interval and terminated prior to the termination of the first time interval. An electronic switching circuit is also connected to the retrace timer to control the retrace transistor.

Voltage generated by the horizontal drive circuit is also used with a voltage multiplier to provide a 1.1 kilovolt acceleration potential for the first anode of the tube. Voltage generated, with appropriate controls, is also used as a variable voltage supply to the brightness grid of the tube.

The vertical drive circuit disclosed also utilizes solid state design. A voltage ramp generator is utilized for the vertical trace wave form with a solid state shaping circuit for compensating for nonlinearities due to the surface of the tube. The shaped wave form and the voltage ramp are connected to the summing node of an operational amplifier to produce the output signal for the vertical yoke. Circuitry is also disclosed for vertical retrace which is an integral part of the vertical drive circuit. A zero crossover network is also disclosed as well as a dynamic focus circuit which is connected from the vertical drive circuit to the focus grid of the tube because the vertical axis is the long axis in a preferred embodiment of the invention.

Protection circuitry is also disclosed which removes the signal from the brightness grid if loss of horizontal or vertical signal is detected.

DESCRIPTION OF THE DRAWINGS

FIG. **1**, comprising FIGS. **1***a* through **1***d*, discloses in schematic diagram form a preferred embodiment of the invention. As shown in the drawing, the invention comprises horizontal drive circuitry shown primarily in FIGS. **1***a* and **1***b*, vertical drive circuitry shown primarily in FIGS. **1***c* and **1***d*, and video drive circuitry shown in FIG. **1***d*.

DESCRIPTION OF THE PREFERRED EMBODIMENT

Extremely high operating frequencies are achieved utilizing emitter coupled logic (ECL) in an integrated design with high speed solid state components. This permits operation of the video drive circuitry at approximately two hundred megacycles and produces pulse rise and fall times in that circuitry in the range of two to five nanoseconds. Similarly, the horizontal drive circuitry disclosed utilizes high speed components in a two way scan design that permits operation of the horizontal drive circuitry at a frequency of fifty kilocycles. While improvements are disclosed to each of the circuits shown, the preferred embodiment utilizes, in combination, all improvements to create a high resolution display.

Instead of a conventional MOS character generator, the input to the video drive disclosed requires a higher speed character generator (not shown). High speed PROMs, manufacturers designation 74S741, could be

utilized. Specially manufactured high speed TTTL ROMS sufficient to generate a seven by nine dot matrix have also been found satisfactory. The output of the high speed character generator should be converted with an ECL shift register (not shown) to a raster scan video input signal of the desired operating frequency.

The circuits described in detail below are preferably utilized with a high resolution tube. The circuit designs shown and described can be satisfactorily utilized with a high resolution, one hundred ten degree, fifteen inch tube manufactured by Clinton Electronics in Chicago, Illinois.

VIDEO DRIVE CIRCUITRY

As shown in FIG. 1*d*, video input from the ECL shift register is applied to video input pins **5** and **6**. Each input line **18, 20** is terminated with a resistor **22, 23** to a negative voltage source generated with a zener diode **26**, having a small bypass capacitor **28** to ground. The resistance is chosen to match the impedance of the wires leading to the input as is conventional in high speed logic circuits to eliminate reflections in the line.

The input lines **18, 20** are connected to an ECL amplifier **31**, operating as a receiver, for common mode rejection of any noise or reflections which the terminating resistors **22, 23** do not shunt out. The outputs **33, 34** of the ECL amplifier **31** are terminated by resistors **35, 36** and connected to a pair of ECL differential drivers **37, 38** connected in parallel. Two drivers **37, 38** are used to achieve sufficient current for operation of the circuit and to achieve higher speed of operation of the circuit.

The outputs **42, 43** and **45, 46** of the differential drivers **37, 38** are connected to two transistors **51, 53** connected as a differential amplifier to form a non-saturating high speed current mode switch. The transistors **51** and **53** are selected to have a high band width at the operating current level. The emitters of the transistors **51, 53** are connected together and connected through two resistors **58, 59** to voltage source to form a current source. The collector **61** of one **51** of the two transistors **51, 53** forming the differential amplifier is connected to ground. The second transistor **53** is connected in a cascode arrangement to a transistor **63** to form a single ended voltage drive to provide a relatively low operating voltage for the first transistor **53** and a relatively high operating current which is converted to high variable voltage by the other transistor **63**.

In the collector-emitter circuit **66** between the transistors **53, 63** a resistor **68** is provided connected to a positive bias that guarantees that when the first transistor **53** is off that the second transistor **63** is reverse biased so that there will be no leakage. Two high voltage, fast recovery clamp diodes **68, 69** are connected to the collector of the transistor **63** to keep the transistor **63** out of saturation. The diodes **68, 69**, which preferably have a recovery time in the neighborhood of one to three nanoseconds, are capable of withstanding voltages in the neighborhood of forty volts and can handle surge currents up to two hundred milliamps. A commercially available diode clamp of this type is manufactured by Motorola under Part No. MSD 7000.

To obtain sufficient power to operate the video beam at the desired high frequencies, the output of transistor **63**, from the collector, is connected to a regulated voltage source by a high power low resistance bank of resistors **78–82**. It is important that these resistors be high power carbon composition resistors rather than wire wound to negate effects of inductance and capacitance.

A small inductor **86** is also provided to compensate for residual capacitance in the video drive, including capacitance attributable to the tube and other circuit parameters including the transistor **63** and diodes **68, 69**. A resistor **88** is provided across the inductor **86** to damp any oscillations caused by interaction between the inductor **86** and capacitance of the circuit and the network is grounded through a capacitor **92** to provide a tuned circuit which is critically damped and diode clamped so that the video drive signal is sufficiently attenuated to prevent overshoot during operation.

HORIZONTAL DRIVE CIRCUITRY

To operate at the desired high frequency the horizontal drive is not operated with the conventional flyback technique. Instead, the trace is driven in both directions. Also, rather than using a tuned oscillator which is conventional in raster displays, an inherently linear circuit has been devised which eliminates the correction devices common to conventional displays.

The horizontal drive circuit, which in its normal state is in the sweep mode, responds to a horizontal sync pulse for retrace which is applied to pin **1**. Pin **2** is connected to ground. As in the video circuit a pair of terminating resistors **103, 104** is connected to the input. The pulse is applied a short period of time before retrace is desired, the time interval being in the neighborhood of one to two microseconds. The pulse is applied to a one-shot timer **106** which can be adjusted with a potentiometer **110** to provide precise timing for the operation of the circuit. The one-shot preferably has a nominal value of one-half microsecond which can be varied over a range of five to one with the use of a potentiometer **110** to compensate for the various storage times or delays of the circuit components. The output, when the one-shot times out, from pin **4** is connected through various components described more fully below to transistor **112** to control the sweep trace and is also connected to transistor **113** to control the retrace.

To turn the sweep transistor **112** off to allow retrace to occur the output of the timer **106** from pin **4** is connected to pin **10** of a retrace one-shot timer **120** having a nominal time period of eight to twelve microseconds. The time period should be sufficient to allow retrace to occur. The output from the retrace timer **120**, pin **12**, is inverted by three inverters **123–125** in parallel. The inverters **123–125** are of the open collector type to interface between the TTL logic and discrete components. The output of the inverters **123–125** is connected to two transistors **130, 131** connected as a differential amplifier which operates as a differential switch. The differential switch operates to, in one state, turn the sweep transistor **112** on, and in the other state, to turn the sweep transistor **112** off.

To operate properly, the sweep transistor **112** must be driven on hard and driven off hard. Consequently, the output of the three inverters **123–125** is connected to a voltage divider made up of two resistors **133, 134**. The output, from the middle of the voltage divider **133, 134**, is applied to transistor **130** which is one side of the differential switch. The voltage applied to the second transistor **131** of the differential switch obtained from the voltage divider formed from resistors **135, 136**, is higher than the voltage applied to transistor **131** but is less than full potential so that a transistor **138** controlled by transistor **131** and directly connected to the base of

the sweep transistor **112**, can be driven on in the opposite state. Connected to the emitters of transistors **130**, **131** are three bias resistors **140–142** in parallel, although one properly selected resistor could be used if available.

Transistor **138** is provided to aid in deenergizing the sweep transistor **112**. The base of transistor **138** is connected to the output of transistor **131** by resistor **144** and when it is driven into saturation by transistor **131** it guarantees that the sweep transistor **112** will be turned off. It is connected to a negative voltage supplied by a conventional regulator **150** to avoid uneven turn-off time or ripple in the voltage. Consequently, during retrace, the first transistor **130** of the differential switch is off and current flows through **131** from the negative power supply through resistor **152** and the base emitter junction of **138**. The collector of **138** is directly connected to the base of sweep transistor **112**. Therefore, the negative pulse on the base of **112** turns the sweep transistor off and assures that there is no leakage during the entire retrace cycle. The direct coupling of the collector of transistor **138** to the base of the sweep transistor **112** produces a turn-off time of under one hundred nanoseconds.

A high speed diode **156** is connected across the sweep transistor to protect it by bypassing excess energy from the yoke.

After about nine microseconds, at which time the timer **120** times out and returns to its normal state, the low output of the timer **120**, which is connected through the drivers **123–125** turns transistor **130** on and transistor **131** off thereby turning transistor **138** off and transistor **112** on to cause another sweep trace.

This condition continues during the sweep trace and remains until another horizontal sync signal is received to cause another retrace sweep.

The same pulse that turns the sweep transistor **112** off is utilized to turn the retrace transistor **113** on to cause retrace. However, it is important that the sweep transistor **112** be fully off before the retrace transistor **113** is turned on since there is virtually no impedance between them. To achieve the time delay, a timer **155** is utilized to create a nominal delay of approximately one to three microseconds. The nominal time delay is achieved with components **158**, **159** which can be varied to give sufficient timing.

After the nominal time delay the $\overline{Q}$ output from pin **12** is connected to a third timer **162** to produce an adjustable turn-on pulse with a nominal width of approximately two microseconds. Timing components **163**, **165** and variable resistor **167** are provided to adjust the turn-on pulse within a range of three to one. The function of the timer **162** is to control the duration of the retrace pulse. It can also function to compensate for anomalities in previous circuit elements.

The output of timer **162** is also connected to three inverters **171–173** to interface the TTL logic levels with discrete logic levels for transistor operation. Three inverters **171–173** are used to produce higher current for a transistor **176** which operates as a current switch. When the retrace pulse occurs a voltage is produced across resistor **180** which produces a current through it which is run through common base transistors **176** and **182** which are selected for their high voltage, medium power characteristics. The two transistors **176** and **182** are connected in series in a cascode arrangement to convert the current to voltage. The base of transistor **176** is connected directly to a positive power supply which determines the current through resistor **180**. Resistor **184** is connected between the base and emitter of transistor **176** to guarantee that the transistor **176** has no leakage when it is in its off state. Any leakage current which occurs is shunted through resistor **184** to the base of transistor **176** where it is dissipated.

The base of transistor **185** is maintained at half the horizontal yoke retrace voltage by resistors **188**, **189**. Capacitors **191** and **193** are connected across a voltage divider made up of resistors **188** and **189** to bypass any noise. The collector of transistor **182** is connected to the base of transistor **195** to turn transistor **195** on for the entire retrace pulse. The collector of transistor **195** is connected through diode **198**, a DC blocking diode in the off state, to transistor **113**, the retrace transistor, which is then turned on and supplies the horizontal yoke with energy through diode **201** connected to the emitter of the retrace transistor **113**.

During the entire retrace sweep inductor **203** is charged through resistor **205**. After the retrace network shuts off, detected at transistor **185**, the inductor **203** has sufficient energy to apply a negative pulse to the base of transistor **195** to guarantee that the transistor **195** has good turn-off characteristics. That circuit is clamped by diode **207** to assure that the negative pulse from the inductor **203** does not put a reverse bias on the base of the transistor **195** which would damage it. A damping resistor **209** is also connected across the inductor **203** to keep the circuit from ringing due to parasitic capacitance in the inductor **203**.

An inductor **212** is provided which is connected to the base of the retrace transistor **113** which is the power-driver transistor for the horizontal yoke. The inductor is charged through resistor **214** and is damped by resistor **216**. The output of the inductor **212** is amplified by transistor **218** to turn the retrace transistor **113** off quickly.

Capacitor **221** connected to the emitter of the retrace transistor **113** and across diode **201** assures negative bias of the transistor **113** to prevent leakage current. In the sweep mode it keeps the emitter of transistor **113** at a higher potential than the quiescent point of the base. Capacitor **221** is selected for its high speed characteristics.

Also connected to the yoke drive is diode **223** which protects transistor **113** from reverse bias and shunts energy into capacitors **228** and **229** during the first half of the retrace period. In the absence of such a diode **223** the voltage on the yoke would go sufficiently high to burn out the transistor **113**. The diode **223** is selected for its high voltage, high speed characteristics and is an extremely fast recovery diode. Diode **156** connected across the sweep transistor **112** is the equivalent of diode **223** and similarly protects the bottom driver **112** by bypassing excess retrace energy during the first half of trace.

The two capacitors **228** and **229** are expecially selected to provide electrical characteristics suitable for the circuit. Capacitor **228** is preferably a low capacitance non-polar mylar or polystyrene capacitor designed to take high current for a very short period of time to handle the switching edge or load. However, it does not have sufficient capacity to provide sufficiently low ripple so capacitor **229** is connected across capacitor **228** which is a high capacitance aluminum electrolytic capacitor to handle the drive current which itself could not be used alone because it does not have satisfactory high frequency characteristics.

Also connected to the horizontal yoke is a damper consisting of capacitor **232** and resistors **234** and **235** which are connected to ground. These components **232**, **234**, **235** comprise a yoke damping circuit sufficient to damp extremely high frequency oscillations, in the range of one megahertz, which may occur. The components **232**, **234** and **235** must be selected according to the inductive characteristics of the yoke utilized with the circuit and the capacitor **232** selected should have a negative temperature coefficient to provide stable operation at increasing currents. In addition, the resistors **234**, **235** should be carbon composition to avoid inductance and must provide sufficient power dissipation for the circuit.

To assure linearity, the yoke is preferably not connected from the trace and retrace transistors **112**, **113** to ground but is connected from the switching pair **112**, **113** to a shaping circuit comprised of a high frequency polystyrene or Mylar capacitor **238** picked in value to match the inductance of the yoke.

The horizontal drive circuitry is also connected to protection circuitry **240** as discussed more fully below.

Rather than dissipating all of the energy accumulated by the inductance of the yoke it is utilized to provide a well regulated high voltage power supply for the first anode. This is accomplished through a high voltage multiplier **242** consisting of resistor **246** which is connected to a capacitive diode multiplier of the typical cascade type which consists of diodes **250** through **256** and capacitors **260** through **267**. The diodes **250–256** must be of a high recovery type and the capacitors **260–267** must be high frequency with a high voltage rating and should be as large as physically feasible. Preferably the high voltage multiplier **242** is designed to provide 1.1 kilovolt for the first anode.

The energy from the yoke drive is also utilized to provide a negative voltage to the brightness grid. This voltage is supplied to capacitor **282** through capacitor **284** and resistor **286** and is maintained with diodes **290** and **291**. The actual voltage supplied to the brightness grid is highly adjustable through the use of adjustable resistors **293**, **294** and **296**.

VERTICAL DRIVE CIRCUITRY

As discussed in detail below, the vertical drive circuit utilizes semiconductor design for all functions including shaping which permits direct coupling of components.

The vertical retrace pulse is applied to the vertical drive circuit shown in FIGS. **1***c* and **1***d* at input pins **3** and **4**. The vertical retrace pulse is a positive going pulse of short duration. Pin **4** provides the ground return. As in the case of the horizontal drive circuit, a TTL signal is provided, which is terminated by resistors **302** and **306**. The input is connected to a one-shot timer **310** which functions to provide a precise retrace pulse regardless of the input pulse received. The timer **310** triggers on the positive edge of the pulse and employs an internal Schmitt trigger for noise rejection. The timing of the timer **310** is nominally set for one hundred microseconds with components **312** and **314**. The timing period must be sufficient to discharge the vertical sweep capacitor **320** which should be selected for its dielectric absorption. The output of the timer **310** is connected to a diode **312** to interface with the sweep generator, the output of which is connected to a current source consisting of resistor **314** connected to the positive voltage supply.

When pin **1** of the timer **310** is in the low state, the diode **312** conducts and discharges the capacitor **320**. When the timer **310** is in the normal state and the circuit is not retracing, pin **1**, the $\overline{Q}$ output of timer **310** is high and the diode **312** is cut off which produces no appreciable effect on the current ramp or voltage ramp produced by the circuit. The resistor **324** is provided to limit the surge current into the capacitor **320** during the retrace pulse from the timer **310**.

The foregoing circuitry will produce a linear ramp at the capacitor **320** which is linear up to the desired voltage. Its repetition rate is at the frequency of operation which is sixty hertz in the United States and about fifty hertz in Europe. The linear ramp is supplied to an operational amplifier **330** which functions as an impedance buffer having a low output impedance. The output of the operational amplifier **330** is connected through a DC blocking capacitor **332**, to the summing node input, pin **6**, of a second operational amplifier **334** through resistor **338** and through resistor **339** to a linearity correction or shaping circuitry **342**.

The gain or amplitude of the shaping circuit **342** is governed by variable resistor **344**.

The shaping circuit which consists of transistors **347** and **348** and associated components **352–356** produces the shaping function due to the exponential characteristics of the collector current versus base emitter resistance of the transistors **347**, **348**. Symetric operation is assured by the differential arrangement of parts. The differential transistors **347**, **348** and transistor **350** are preferably chosen in a quad pack rather than utilizing matched transistors or matched pairs. Transistor **350** is used for impedance matching of the operational amplifier **334**.

The output of the shaping circuit **342** is connected to the operational amplifier **334** at 08n **6**, the output of which, from pin **7**, is used to drive the vertical yoke. Pin **5** of the summing amplifier **334** is grounded while pin **6** is bypassed with a capacitor **372** to ground to critically damp the circuit. The output from the amplifier **334**, on pin **7**, functions during the vertical sweep trace to drive a variable current source **380**, shown in FIG. **1***d*.

The current source is made up of a pair of matched diodes, **386**, **388**, each connected to regulated voltages by resistors **392**, **394**. The output from each diode **386**, **388** is connected to the base of a pair of transistor **398** and **394**, respectively, creating an inverted output on the collectors of the transistors.

When the output of the operational amplifier **334**, pin **7**, goes positive the base of transistor **398** goes slightly positive increasing the current through the transistor **398**. At the same time, the base of the second transistor **399** goes positive decreasing the current through the second transistor **399** creating an amplified analog output. This design is utilized so that the transistors **398**, **399** do not switch states which prevents zero crossover.

The collector outputs of the transistors **398** and **399** are connected to power transistors **406** and **408** which drive the vertical yoke. Resistor **411** is connected across the collectors of transistors **398** and **399** to assure satisfactory quiescent current of transistors **406** and **408** and resistors **414** and **416** are also provided to shunt current across the base emitter circuit of transistors **406** and **408** to improve the quiescent performance of the transistors.

The output from the collectors of transistor **406** and **408** is connected to the yoke through an inductor **420** which is designed to decouple noise picked up by the

vertical yoke from the horizontal drive signal. The return from the yoke is connected through a power resistor **424** to ground. The voltage signal present on the ungrounded side of resistor **424**, representing the current going through the vertical yoke is connected back to the summing node, pin **6**, of the operational amplifier **334** through resistors **430** and **434** closing the loop. In this manner gain is increased automatically when the yoke current and temperature increase creating a larger voltage to drive the yoke to assure that current through the yoke remains essentially constant.

The linear amplifier circuitry previously discussed drives the yoke during normal sweeping, that is, from the top of the screen down to the bottom. An additional circuit is provided consisting of transistors **448** and **449** and associated components **452**, **453** and **454**, also controlled by operational amplifier **334** to return the beam to the top of the screen. It is supplied from the energy source supplying the video drive since the video drive is always off during vertical retrace in normal operation.

The retrace signal to the base of transistor **448** is produced when, at the bottom of the sweep, the sweep capacitor **320** has discharged. The operational amplifier **334** has positive drive on both ends of the current source into pin **6** so the summing node is highly negative. Consequently the output, on pin **7**, goes positive until transistor **448** clamps the voltage. Since the output is directly coupled to transistor **448**, the transistor **448** is driven into saturation. Transistor **448** is connected to the base of transistor **449** by resistor **452**. This produces a sufficient signal to saturate transistor **449**. When transistor **449** is in saturation sufficient energy to accomplish retrace is provided to the yoke through resistor **456**.

Resistor **453** is provided to keep transistor **449** in the off state during the vertical sweep and capacitor **454** is connected across resistor **453** to bypass noise which may be generated from the video circuit.

A dynamic focus circuit **461** is also provided which is connected to the yoke. The yoke current is connected to pass through a differential amplifier made up of transistors **466** and **467**. The differential current is amplified and rectified by transistors **472** and **474** producing a variable current through resistor **477** which is proportional to the absolute value of the vertical position of the trace from center. In other words, a high current from the yoke is produced when the trace is at the center, and low current is produced at the top and bottom of the trace. Voltage is applied to transistor **481** from the voltage source through resistor **483** to the collector of the transistor. The output, from the dynamic focus circuit **461**, is connected to the base of transistor **481** which produces a sawtooth trace varying between substantially zero volts when the trace is in the center vertically and higher voltages when the trace is at the top and bottom of the screen with a linear ramp in between. The signal is coupled through capacitor **488** to the focus grid of the tube as a focus correction to the standard focus required by the screen. The focus correction is required because of the longer path that the electron beam must follow when it is at the edges of the screen. Since the vertical axis is the long axis for the preferred embodiment of the display this focus correction is adequate when applied to only the long axis.

PROTECTION CIRCUITRY

Protection circuitry **240** is also provided to remove the signal from the brightness grid. This will occur any time that a horizontal sync signal or vertical sync signal is lost for any reason. Elimination of the brightness signal will prevent burning or otherwise damaging the screen. The protection circuitry utilizes a dual retriggerable one-shot timer **491**, which is connected to the signal from the horizontal yoke. The timer is set for a nominal timing of fifty microseconds with the use of components **494** and **495** and under normal operation will be triggered every twenty microseconds.

The protection circuitry **240** is also connected to the vertical drive at input pin **2** of a second retriggerable timer **497** which is designed to time out at approximately fifty milliseconds with components **503** and **504**. Vertical retrace should occur every sixteen to twenty milliseconds depending on use in the United States or in Europe. If a vertical retrace pulse is not received, timer **497** times out and the Q output on pin **13** is connected to the clear input of timer **491**. Consequently, if a vertical retrace sync is not received, the timer **491** will be cleared and the video will be shut down. Shut down is accomplished with the utilization of a switchable current source through transistor **508**. The current source is produced by a fixed voltage across resistor **511** producing voltages on resistors **293**, **294** and **296** which are connected directly to the brightness terminal of the display.

In general, while a specific embodiment of the invention has been described, it is to be understood that this is for the purpose of illustration only and that various modifications can be made within the scope of the invention and that all such modifications are within the intendment of the invention.

I claim as my invention:

1. An electronic circuit for producing a high resolution cathode ray tube display comprising:

a video drive circuit comprising means for converting a high frequency digital raster scan video input signal into a high voltage high frequency video drive signal at a bit data rate in excess of one hundred fifty megacycles; and

a horizontal drive circuit comprising means for generating a two-way horizontal drive signal which operates at a frequency in excess of forty kilocycles.

2. The electronic circuit of claim **1** further comprising a vertical drive circuit for generating a vertical drive output signal comprising solid state signal shaping means for generating an output signal for the vertical trace scan which is compensated for nonlinearities due to the surface of the tube and a solid state vertical retrace circuit for generating a vertical retrace scan signal after the vertical scan has been completed.

3. A video drive circuit for producing a high resolution cathode ray tube display from a high frequency low voltage logic level video input signal comprising:

receiving means for receiving the video input signal; and

conversion means connected to the receiving means for generating a high frequency high voltage video drive signal from the low voltage logic level input signal, the video drive signal having a data rate frequency in excess of sixty megacycles.

4. The video drive circuit of claim **3** wherein the receiving means and the conversion means have a response time of less than 5 nanoseconds.

5. The video drive circuit of claim **3** wherein the receiving means and conversion means comprise emitter coupled logic.

6. The video drive circuit of claim 3 wherein said conversion means operates at a frequency of 100 megacycles.

7. The video drive circuit of claim 3 wherein said conversion means operates at a frequency of approximately 200 megacycles.

8. The video drive circuit of claim 3 wherein the conversion means comprises:

current conversion means for converting the high frequency input signal to a high frequency current signal; and

voltage conversion means for converting the high frequency current signal to a high frequency voltage signal.

9. The video drive circuit of claim 8 wherein the current conversion means comprises two differential amplifiers connected in parallel to produce higher current, each of which is connected to a different transistor, the two transistors being connected to form a high frequency current mode switch.

10. The video drive circuit of claim 9 wherein the display circuit further comprises a source of voltage and wherein the voltage conversion means comprises a third transistor connected in a cascode arrangement between one of the two transistors in the current conversion means and the source of voltage.

11. The video drive circuit of claim 10 further comprising damping means connected between the source of voltage and the video drive input of the cathode ray tube whereby the circuit is critically damped.

12. The video drive circuit of claim 11 further comprising at least one diode connected between the third transistor and the video drive input of the cathode ray tube whereby the circuit is diode clamped.

13. The video drive circuit of claim 3 further comprising means for dissipating power generated by operation of the circuit.

14. A video drive circuit for producing a high resolution cathode ray tube display from a high frequency video input signal comprising:

a receiver having two outputs for receiving the high frequency input signal;

two drivers each having two outputs connected in parallel, each driver connected to the two outputs of the receiver;

a high current differential switch comprising two transistors, each of which is connected to each of the outputs of the two drivers;

a third transistor connected to one of the two transistors in the differential switch in a cascode arrangement;

a voltage source connected to the third transistor for supplying a high frequency output signal to the video drive input terminal of the cathode ray tube;

diode means connected to the third transistor for diode clamping the signal from the circuit;

means for critically damping the output signal; and

means for dissipating power produced by the circuit.

15. A video drive circuit for producing a high resolution cathode ray tube display from a high frequency video input signal comprising;

a differential amplifier connected to the input signal to receive the high frequency video input signal;

two differential amplifier drivers connected in parallel to the outputs of the first differential amplifier;

two transistors connected in parallel to the outputs of the drivers to form a differential high current switch;

a third transistor connected in series in a cascode arrangement to one of the two transistors forming the differential high current switch;

a voltage source controlled by the third transistor and connected to the video input terminal of the tube; and

means for dissipating power generated by operation of the display.

16. An electronic cathode ray tube display circuit to be connected to a cathode ray tube having a video input terminal, a horizontal yoke input terminal and a vertical yoke input terminal comprising

a high frequency video drive circuit connected to a high frequency low voltage logic video input signal and connected to the cathode ray tube video input terminal capable of generating a video drive signal to turn the electron beam of the cathode ray tube on and off at a data rate frequency in excess of forty megahertz; and

a high frequency two way scan horizontal drive circuit connected to the horizontal yoke input terminal of the cathode ray tube to cause trace and retrace scans to occur on the cathode ray tube capable of generating a horizontal scan frequency in excess of forty kilocycles to produce a horizontal scan rate of over forty thousand lines per second.

17. The electronic cathode ray tube display circuit of claim 16 wherein the high frequency two-way scan circuit comprises:

sweep means connected to the yoke of the cathode ray tube for causing the trace to sweep from a first side of the tube to the other;

receiving means for receiving a retrace sync signal;

first circuit means connected to the sweep means for turning the sweep means off during retrace comprising:

first timing means connected to the receiving means for generating a first timing interval during which the sweep means will be off;

electronic switching means connected to the first timing means and the sweep means for switching the sweep means off during the first timing interval and on after the timing interval established by the first timing means;

retrace means connected to the yoke of the tube for causing the trace to return to the first side of the tube; and

second circuit means connected to the retrace means for turning the retrace means on comprising:

second timing means connected to the receiving means for generating a second time interval smaller in duration than the first time interval and which is initiated a finite time after the first time interval and which terminates prior to the termination of the first time interval; and

a second electronic switching circuit connected to the second timing means and the retrace means for switching the retrace means on during the second timing interval and off after the second timing interval.

18. The circuit of claim 17 wherein the first timing interval is less than 10 microseconds.

19. The circuit of claim 17 wherein the second timing interval is on the order of two microseconds.

20. The circuit of claim 17 wherein the scan circuit operates at a frequency of approximately 50 kilocycles.

21. The circuit of claim 17 wherein the retrace means comprises a retrace transistor and wherein the circuit

further comprises means for improving the turn off characteristic of the retrace transistor comprising:

an energy storage device connected to the base of the retrace transistor for accumulating energy during the second time interval and for applying a negative pulse to the transistor after termination of the second timing interval.

22. The circuit of claim **17** wherein the second circuit means comprises an electronic current switching device connected to the second timing means; and

means for converting the current signal through the electronic current switching device to a voltage signal.

23. The circuit of claim **17** further comprising:

bypass means connected across the sweep means for bypassing excess energy produced during the first time interval; and

energy storage means connected to the bypass means for accumulating excess energy produced during the first time interval.

24. The circuit of claim **17** further comprising:

bypass means connected across the retrace means for bypassing excess energy produced during the second time interval; and

energy storage means connected to the bypass means for accumulating excess energy produced during the second timing interval.

25. The circuit of claim **17** wherein the cathode ray tube has a first anode connection and wherein the scan circuit further comprises a voltage multiplier for generating a high voltage for the first anode connection of the tube.

26. The circuit of claim **25** wherein the voltage multiplier generates a 1.1 kilovolt acceleration voltage to be supplied to the first anode of the tube.

27. The circuit of claim **17** wherein the cathode ray tube has a brightness grid and wherein the scan circuit further comprises means for generating a voltage to be supplied to the brightness grid of the tube.

28. The circuit of claim **17** wherein the cathode ray tube has a horizontal yoke and wherein the scan circuit is connected to the horizontal yoke to produce a horizontal drive signal with a frequency in excess of 40 kilocycles.

29. The electronic cathode ray tube display circuit of claim **16** further comprising a vertical drive circuit comprising:

receiving means for receiving an input signal;

means for generating a linear ramp signal after the input signal has been received;

solid state shaping means for shaping the linear ramp to compensate for nonlinearities due to the surface of the tube;

summing means connected to the ramp generating means and the shaping means for producing a drive signal compensated for nonlinearities due to the surface of the tube; and

output means connected to the yoke to drive the yoke according to the signal produced.

30. The circuit of claim **29** wherein the shaping means comprises a matched pair of transistors and wherein the output signal from the shaping circuit is derived from the characteristic curve of the transistors.

31. The circuit of claim **29** further comprising a zero crossover network.

32. The circuit of claim **29** wherein the cathode ray tube has a focus grid and further comprising a dynamic focus circuit connected to the focus grid of the tube for increasing the voltage supplied to the focus grid when the trace reaches the edge of the tube.

33. The circuit of claim **29** wherein the drive signal produced by the ramp generating means and the shaping means causes a trace scan to occur on the cathode ray tube and further comprising means for causing a retrace scan.

34. The circuit of claim **33** wherein the means for generating a linear ramp signal comprises an energy source and energy storage means for accumulating energy to generate the ramp signal and wherein the receiving means comprises timing means for generating a finite time interval during which the energy accumulated by the energy storage means is dissipated and wherein the same for causing a retrace scan comprises solid state components connected to the summing means and the yoke of the tube for generating a retrace scan signal after the energy has been dissipated from the energy storage means.

35. The electronic cathode ray tube display circuit of claim **16** further comprising:

an energy source;

energy storage means connected to the energy source for accumulating energy to generate a ramp signal;

solid state shaping means for shaping the ramp signal to compensate for nonlinearities due to the surface of the tube;

summing means connected to the ramp generating means and the shaping means for producing a vertical drive signal compensated for nonlinearities due to the surface of the tube;

receiving means for receiving an input sync pulse for vertical retrace comprising timing means to generate a finite time interval during which the energy accumulated by the energy storage means is dissipated; and

vertical retrace means connected to the energy storage means for causing a vertical retrace scan to occur after the energy stored in the energy storage means has been dissipated.

36. The circuit of claim **35** wherein the energy storage means accumulates energy to generate the ramp signal after the termination of the finite time interval determined by the timing means.

37. The cathode ray tube display circuit of claims **17** or **29** wherein the cathode ray tube has a brightness grid and the display circuit produces an output signal to the brightness grid and further comprising protection circuitry for cutting off the output signal to the brightness grid when loss of a signal is detected.

* * * * *

UNITED STATES PATENT AND TRADEMARK OFFICE

CERTIFICATE OF CORRECTION

PATENT NO. : 4,238,774

DATED : December 9, 1980

INVENTOR(S) : Frederick D. Lehman

It is certified that error appears in the above—identified patent and that said Letters Patent is hereby corrected as shown below:

In Claim 34, column 14, line 24, "same" should read "means".

Signed and Sealed this

Thirty-first Day of *March 1981*

[SEAL]

Attest:

RENE D. TEGTMEYER

Attesting Officer

Acting Commissioner of Patents and Trademarks