REV.	DESCRIPTION	DATE
A	NEW DRAWING	9/12/2006
B	housing material change	2/9/2011

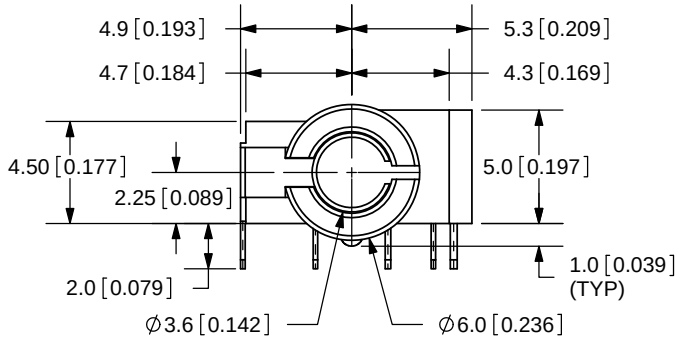

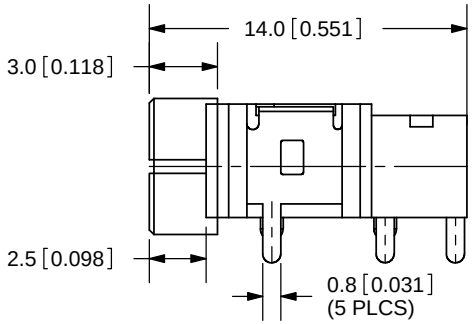

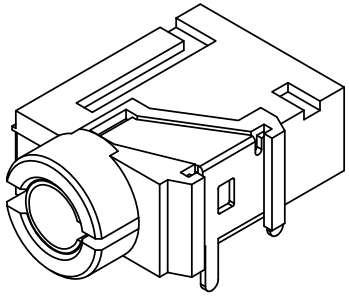

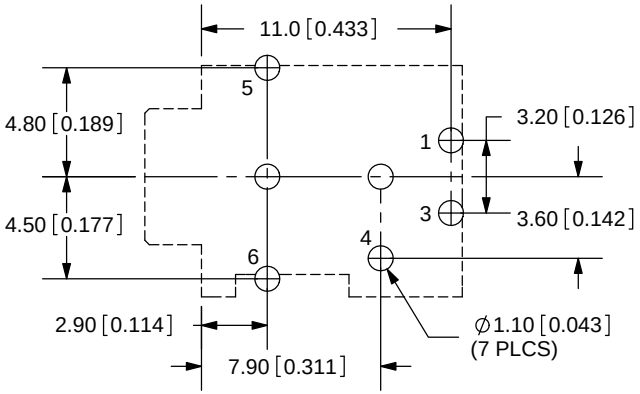

PCB LAYOUT
TOP VIEW

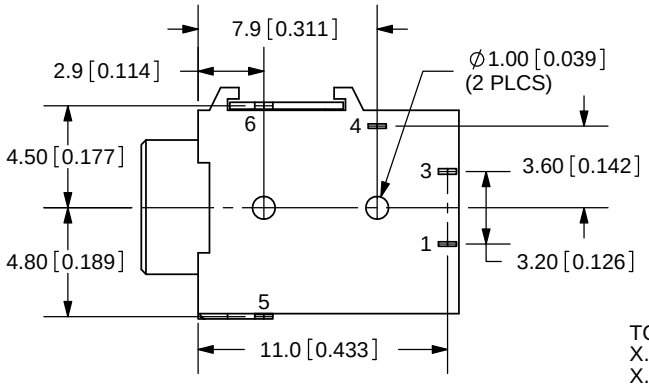

TOLERANCE:
X.X ±0.2mm
X.XX ±0.1mm
X.XXX ±0.05mm

RoHS

SPECIFICATIONS:
RATING: 16V DC @ 300mA
CONTACT RESISTANCE: 100m OHMS MAX
INSULATION RESISTANCE: 100M OHMS MIN: 500V DC
VOLTAGE WITHSTAND: 500V AC R.M.S. FOR 1 MINUTE
LIFE: 5,000 CYCLES

MODEL NO.	SJ-43515TS
SCHEMATIC	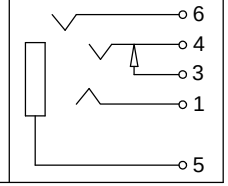

	MATERIAL	PLATING
TERMINAL 1	Phosphor Bronze	Tin
TERMINAL 3	Brass	Tin
TERMINAL 4	Copper Titanium	Tin
TERMINAL 5	Phosphor Bronze	Gold
TERMINAL 6	Phosphor Bronze	Tin
BUSHING	Brass	Nickel
HOUSING	PA66 HF	

CUI INC
20050 SW 112th Ave.
Tualatin, OR 97062
Phone: 503-612-2300
800-275-4899
Fax: 503-612-2383
Website: www.cui.com

TITLE: AUDIO JACK W/4 CONDUCTORS 3.5mm		REV: B
PART NO. SJ-43515TS	UNITS: MM [INCHES]	
DRAWN BY: ZRJ	APPROVED BY:	SCALE: 3:1

PC FILE NAME: SJ-43515TS

COPYRIGHT 2011 BY CUI INC.