Recurrent Neural Networks

deeplearning.ai

Why sequence models?

Examples of sequence data

Speech recognition		"The quick brown fox jumped over the lazy dog."
Music generation	∅	
Sentiment classification	"There is nothing to like in this movie."	★☆☆☆☆
DNA sequence analysis	AGCCCCTGTGAGGAACTAG	AGCCCCTGTGAGGAACTAG
Machine translation	Voulez-vous chanter avec moi?	Do you want to sing with me?
Video activity recognition		Running
Name entity recognition	Yesterday, Harry Potter met Hermione Granger.	Yesterday, Harry Potter met Hermione Granger.
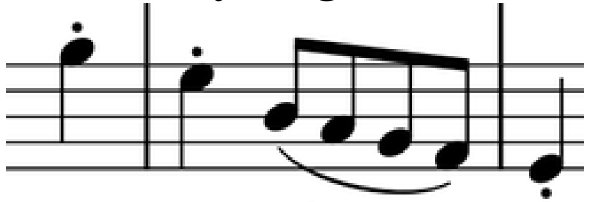
deeplearning.ai

Recurrent Neural Networks

Notation

Motivating example

x: Harry Potter and Hermione Granger invented a new spell.

Representing words

x: Harry Potter and Hermione Granger invented a new spell.

$x^{<1>}$ $x^{<2>}$ $x^{<3>}$ $\dots$ $x^{<9>}$

Recurrent Neural Networks

deeplearning.ai

Recurrent Neural Network Model

Why not a standard network?

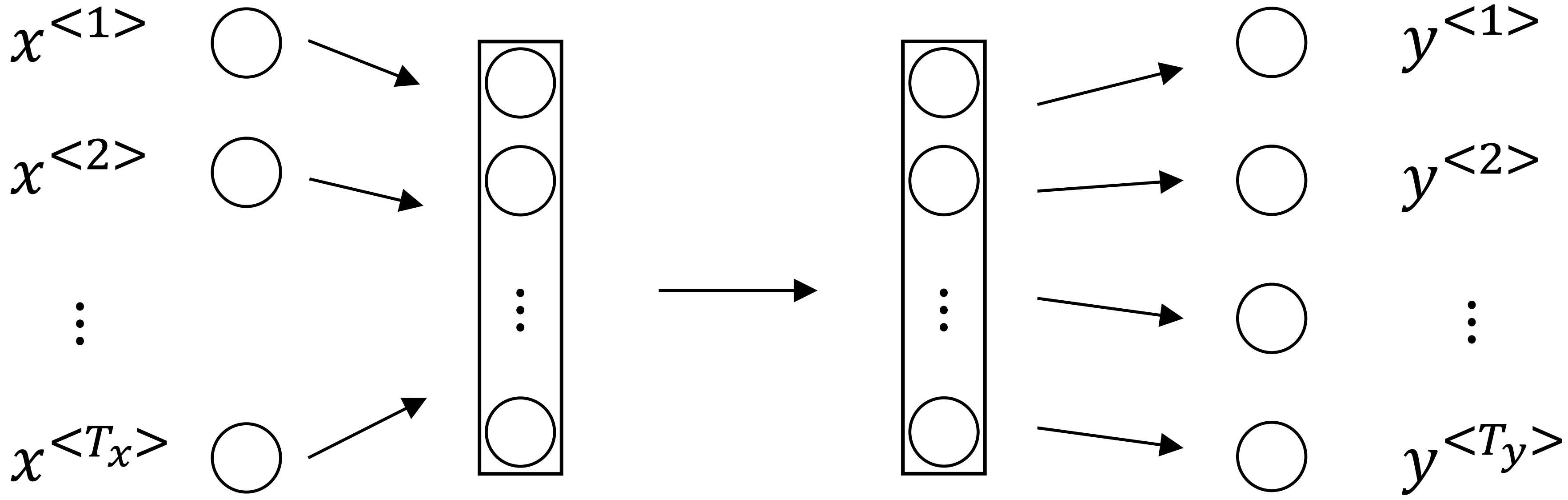

Problems:

- Inputs, outputs can be different lengths in different examples.
- Doesn’t share features learned across different positions of text.

Recurrent Neural Networks

He said, “Teddy Roosevelt was a great President.”

He said, “Teddy bears are on sale!”

Forward Propagation

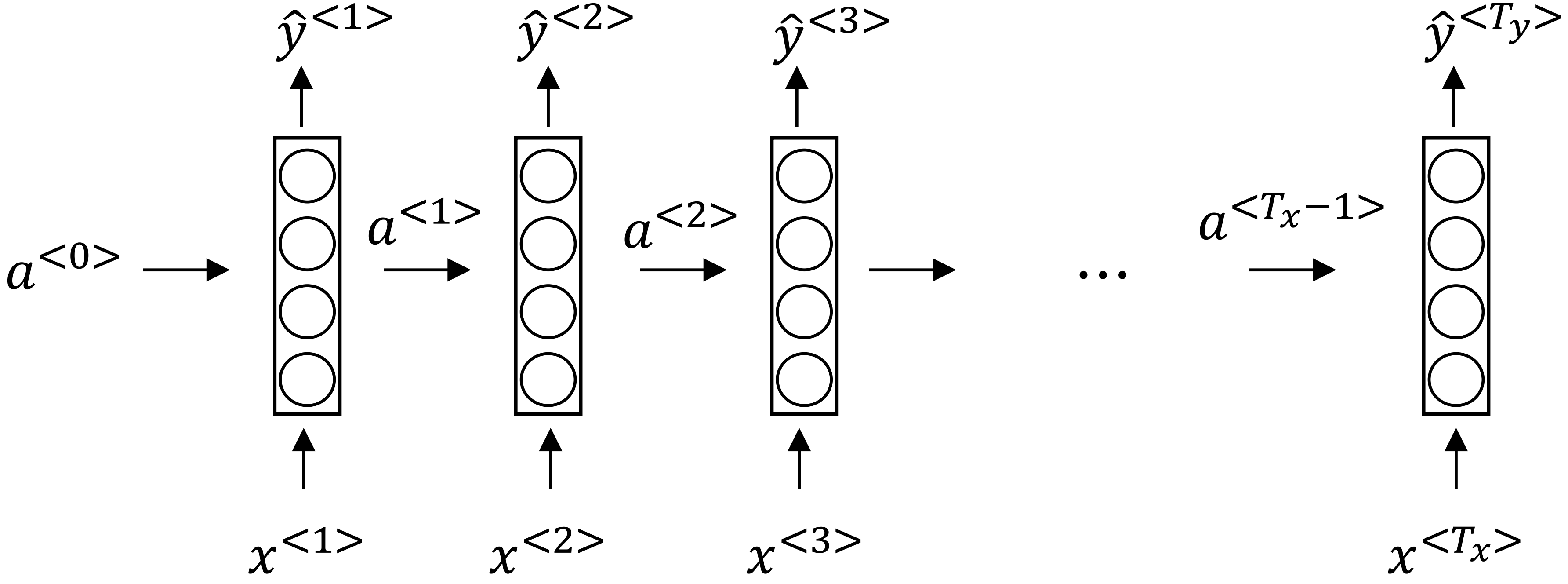

Simplified RNN notation

$$a^{<t>} = g(W_{aa}a^{<t-1>} + W_{ax}x^{<t>} + b_a)$$

$$\hat{y}^{<t>} = g(W_{ya}a^{<t>} + b_y)$$

deeplearning.ai

Recurrent Neural Networks

Backpropagation through time

Forward propagation and backpropagation

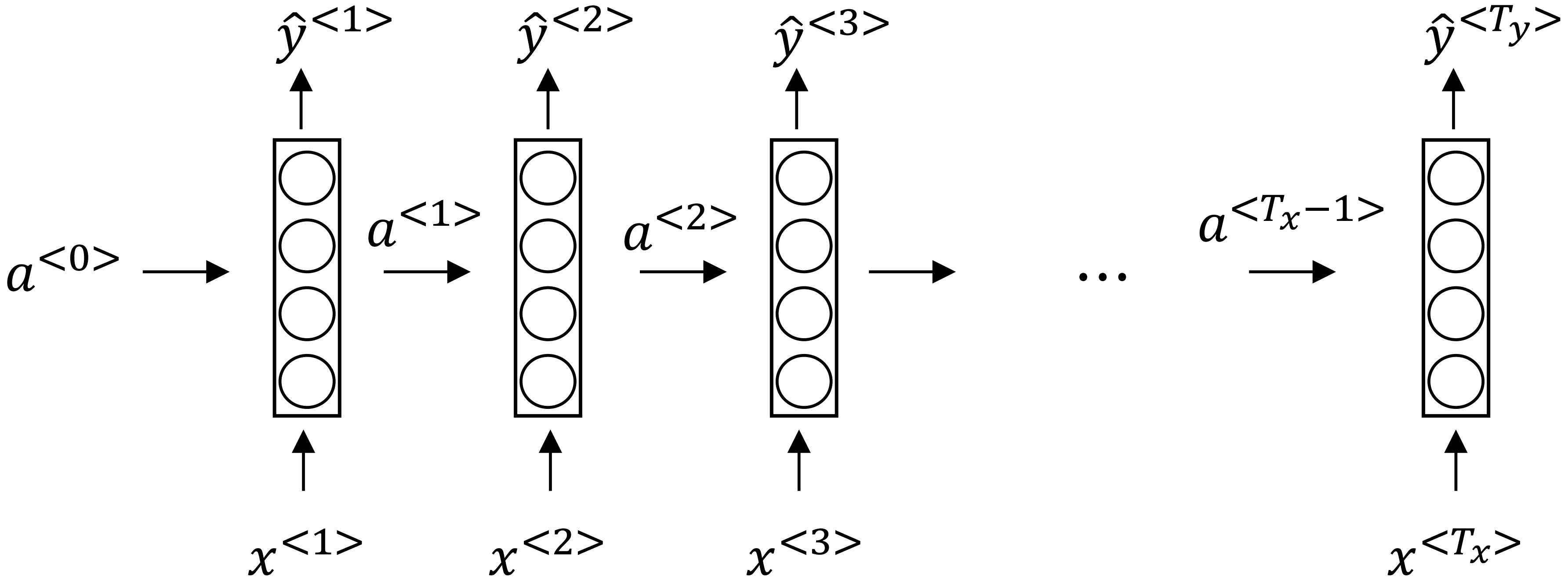

Forward propagation and backpropagation

$$\mathcal{L}^{<t>}(\hat{y}^{<t>}, y^{<t>}) =$$

Backpropagation through time

deeplearning.ai

Recurrent Neural Networks

Different types of RNNs

Examples of sequence data

Speech recognition		→	“The quick brown fox jumped over the lazy dog.”
Music generation	∅	→	
Sentiment classification	“There is nothing to like in this movie.”	→	★☆☆☆☆
DNA sequence analysis	AGCCCCTGTGAGGAACTAG	→	AGCCCCTGTGAGGAACTAG
Machine translation	Voulez-vous chanter avec moi?	→	Do you want to sing with me?
Video activity recognition		→	Running
Name entity recognition	Yesterday, Harry Potter met Hermione Granger.	→	Yesterday, Harry Potter met Hermione Granger.
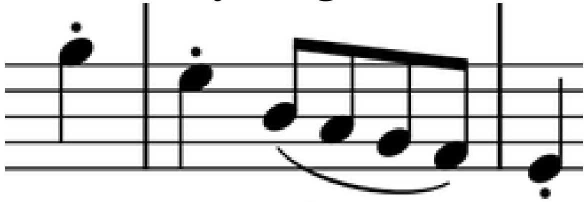
Examples of RNN architectures

Examples of RNN architectures

Summary of RNN types

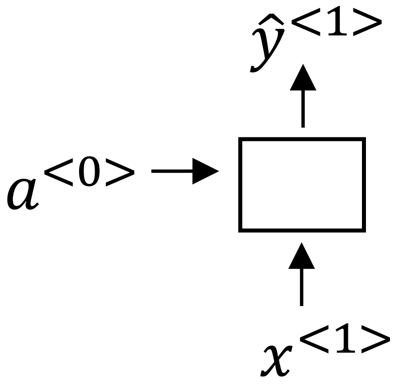

One to one

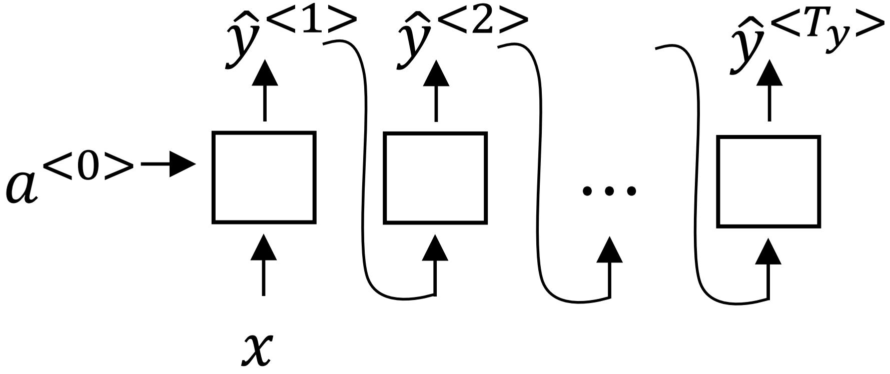

One to many

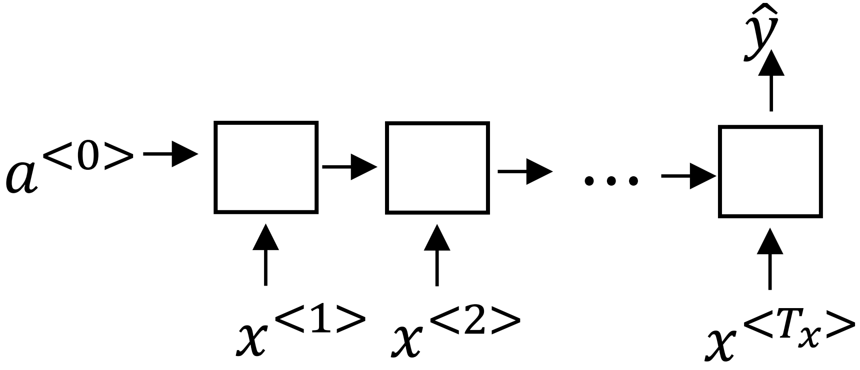

Many to one

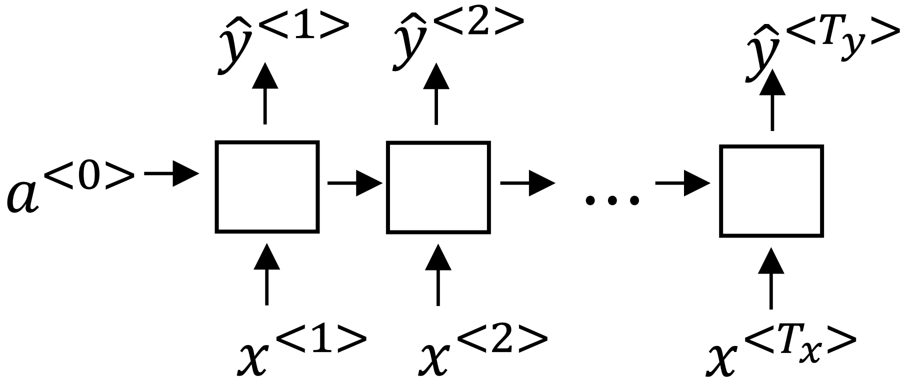

Many to many

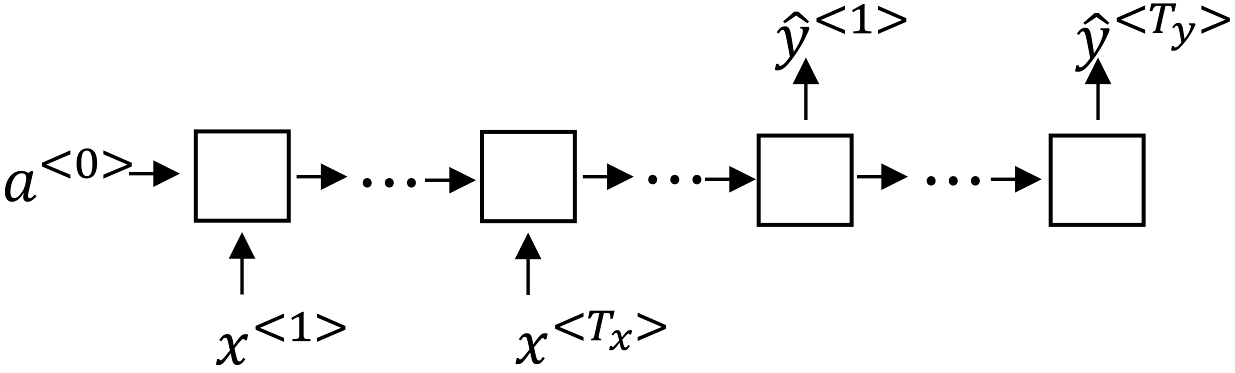

Many to many

Recurrent Neural Networks

deeplearning.ai

Language model and sequence generation

What is language modelling?

Speech recognition

The apple and pair salad.

The apple and pear salad.

$P(\text{The apple and pair salad}) =$

$P(\text{The apple and pear salad}) =$

Language modelling with an RNN

Training set: large corpus of english text.

Cats average 15 hours of sleep a day.

The Egyptian Mau is a bread of cat. <EOS>

RNN model

Cats average 15 hours of sleep a day. <EOS>

$$\mathcal{L}(\hat{y}^{<t>}, y^{<t>}) = -\sum_i y_i^{<t>} \log \hat{y}_i^{<t>}$$

$$\mathcal{L} = \sum_t \mathcal{L}^{<t>}(\hat{y}^{<t>}, y^{<t>})$$

deeplearning.ai

Recurrent Neural Networks

Sampling novel sequences

Sampling a sequence from a trained RNN

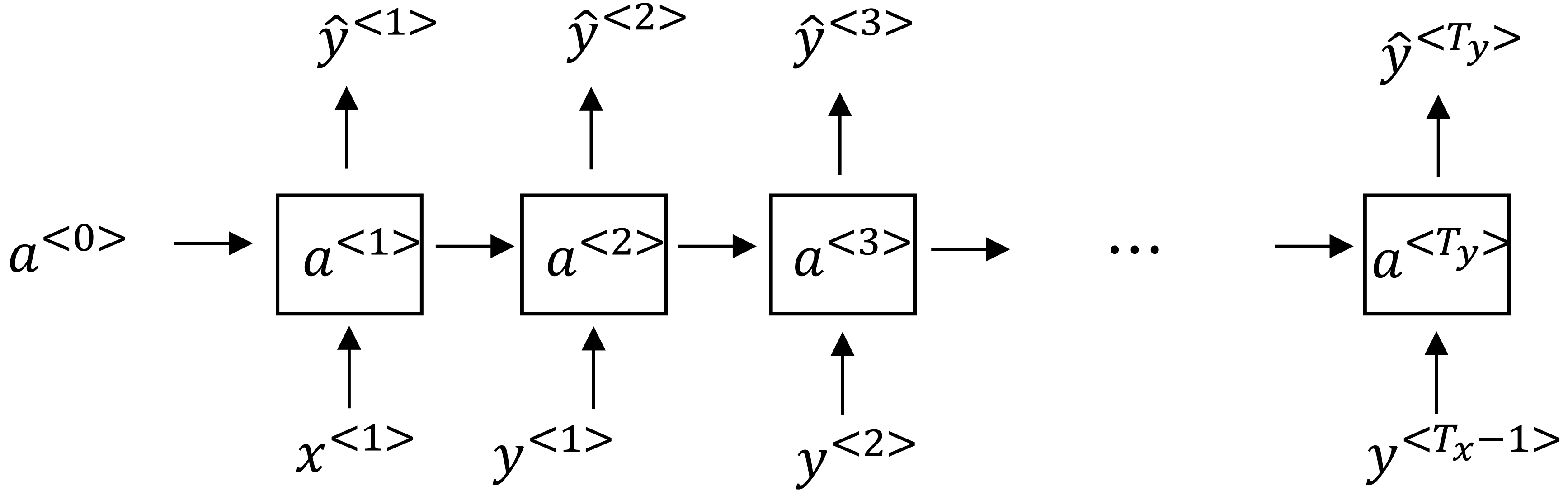

Character-level language model

Vocabulary = [a, aaron, …, zulu, <UNK>]

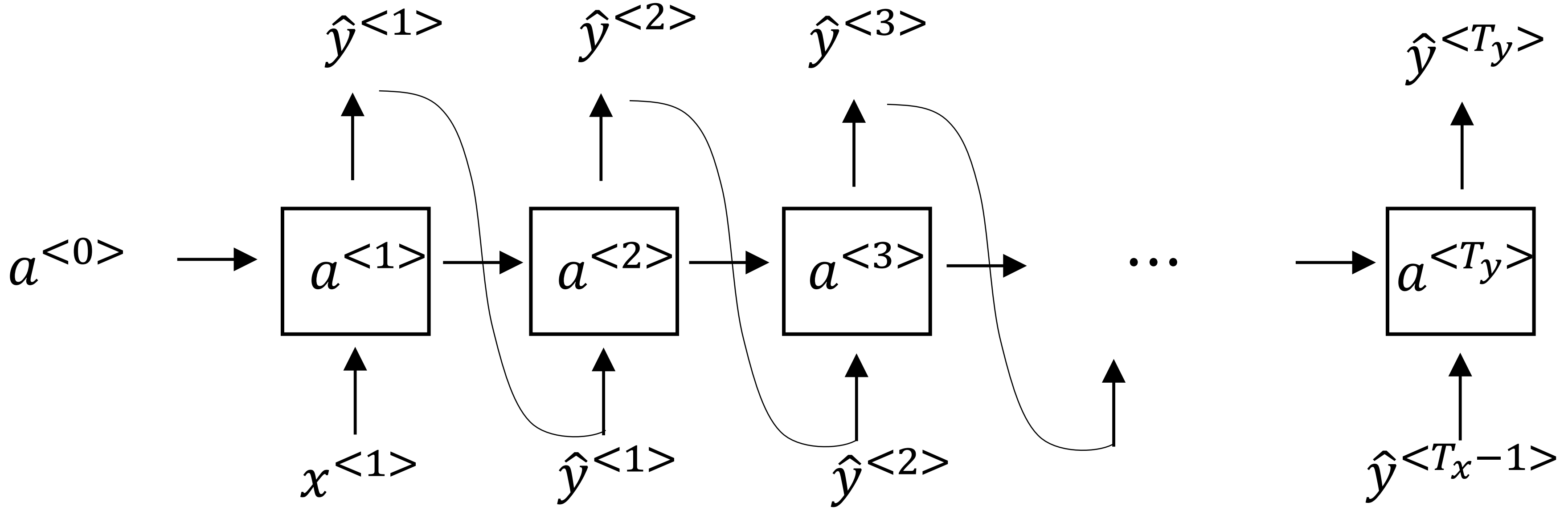

Sequence generation

News

President enrique peña nieto, announced sench’s sulk former coming football langston paring.

“I was not at all surprised,” said hich langston.

“Concussion epidemic”, to be examined.

The gray football the told some and this has on the uefa icon, should money as.

Shakespeare

The mortal moon hath her eclipse in love.

And subject of this thou art another this fold.

When besser be my love to me see sabl’s.

For whose are ruse of mine eyes heaves.

deeplearning.ai

Recurrent Neural Networks

Vanishing gradients with RNNs

Vanishing gradients with RNNs

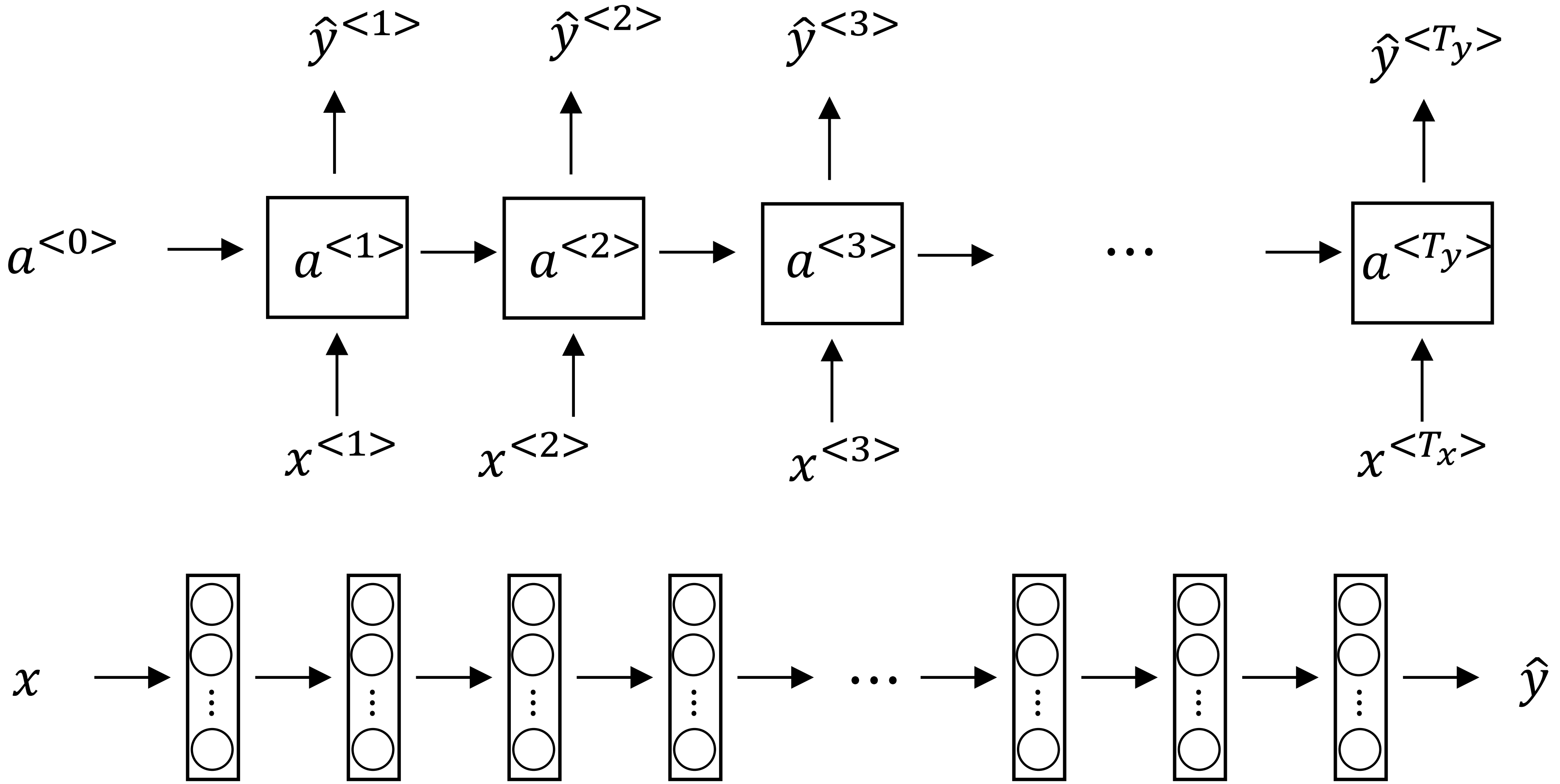

Exploding gradients.

deeplearning.ai

Recurrent Neural Networks

Gated Recurrent Unit (GRU)

RNN unit

$$a^{<t>} = g(W_a[a^{<t-1>}, x^{<t>}] + b_a)$$

GRU (simplified)

The cat, which already ate ..., was full.

[Cho et al., 2014. On the properties of neural machine translation: Encoder-decoder approaches]
[Chung et al., 2014. Empirical Evaluation of Gated Recurrent Neural Networks on Sequence Modeling]

Full GRU

$$\tilde{c}^{<t>} = \tanh(W_c[\, c^{<t-1>}, x^{<t>}] + b_c)$$

$$\Gamma_u = \sigma(W_u[\, c^{<t-1>}, x^{<t>}] + b_u)$$

$$c^{<t>} = \Gamma_u * \tilde{c}^{<t>} + (1 - \Gamma_u) + c^{<t-1>}$$

The cat, which ate already, was full.

deeplearning.ai

Recurrent Neural Networks

LSTM (long short term memory) unit

GRU and LSTM

GRU

$$\tilde{c}^{<t>} = \tanh(W_c[\Gamma_r * c^{<t-1>}, x^{<t>}] + b_c)$$

$$\Gamma_u = \sigma(W_u[\, c^{<t-1>}, x^{<t>}] + b_u)$$

$$\Gamma_r = \sigma(W_r[\, c^{<t-1>}, x^{<t>}] + b_r)$$

$$c^{<t>} = \Gamma_u * \tilde{c}^{<t>} + (1 - \Gamma_u) * c^{<t-1>}$$

$$a^{<t>} = c^{<t>}$$

LSTM

[Hochreiter & Schmidhuber 1997. Long short-term memory]

LSTM in pictures

$$\tilde{c}^{<t>} = \tanh(W_c[a^{<t-1>}, x^{<t>}] + b_c)$$

$$\Gamma_u = \sigma(W_u[\, a^{<t-1>}, x^{<t>}] + b_u)$$

$$\Gamma_f = \sigma(W_f[\, a^{<t-1>}, x^{<t>}] + b_f)$$

$$\Gamma_o = \sigma(W_o[\, a^{<t-1>}, x^{<t>}] + b_o)$$

$$c^{<t>} = \Gamma_u * \tilde{c}^{<t>} + \Gamma_f * c^{<t-1>}$$

$$a^{<t>} = \Gamma_o * c^{<t>}$$

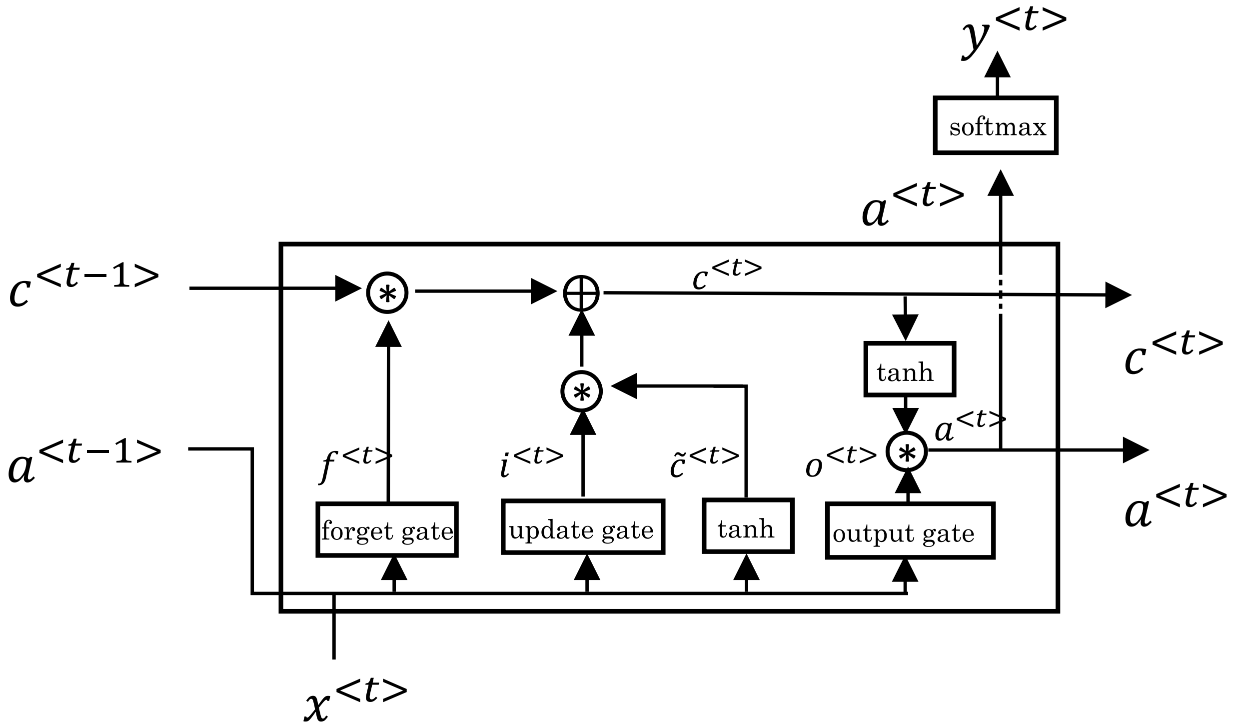

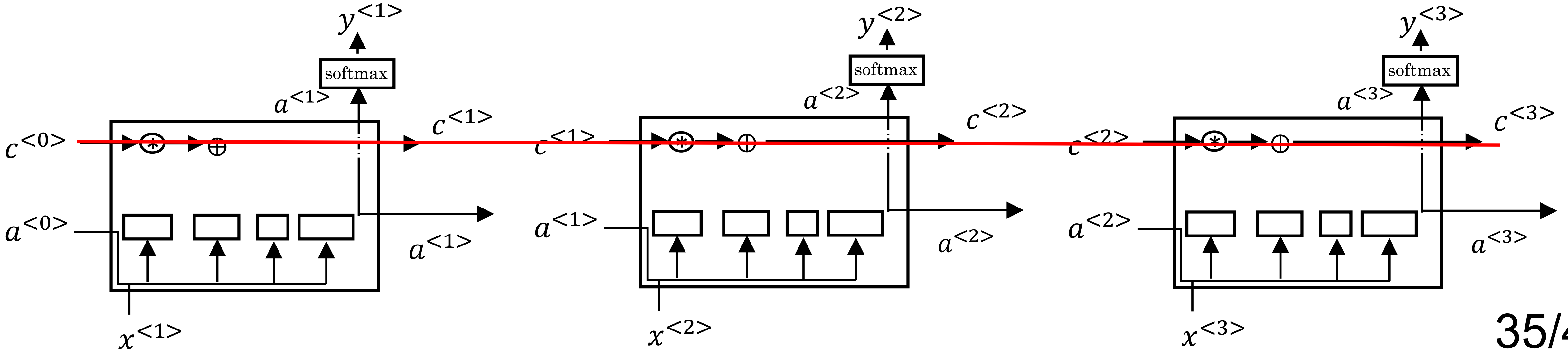

Recurrent Neural Networks

deeplearning.ai

Bidirectional RNN

Getting information from the future

He said, “Teddy bears are on sale!”

He said, “Teddy Roosevelt was a great President!”

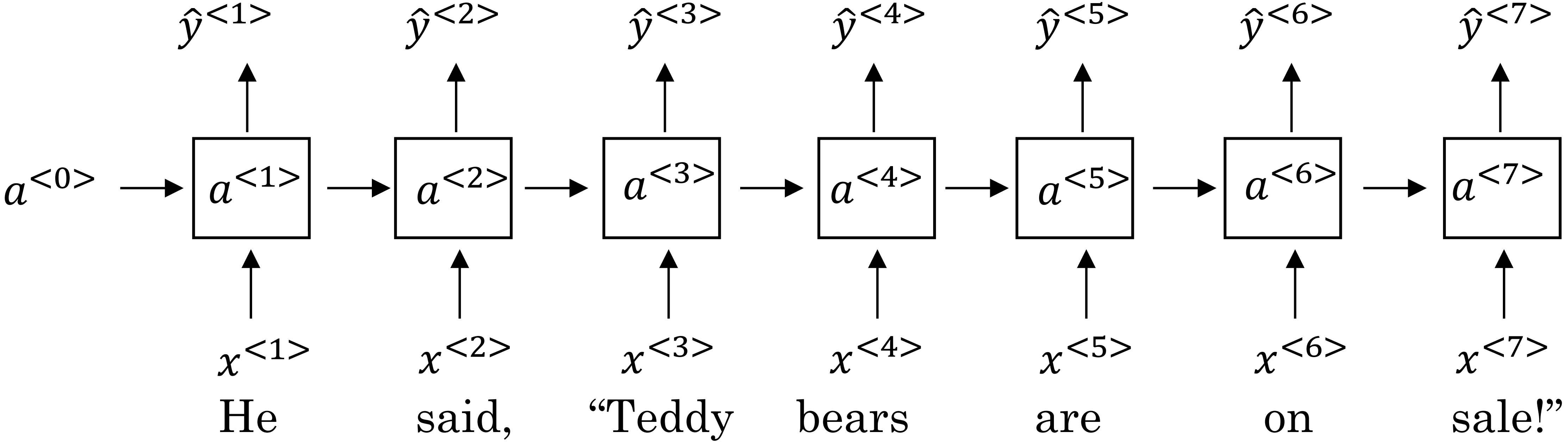

Bidirectional RNN (BRNN)

Recurrent Neural Networks

deeplearning.ai

Deep RNNs

Deep RNN example

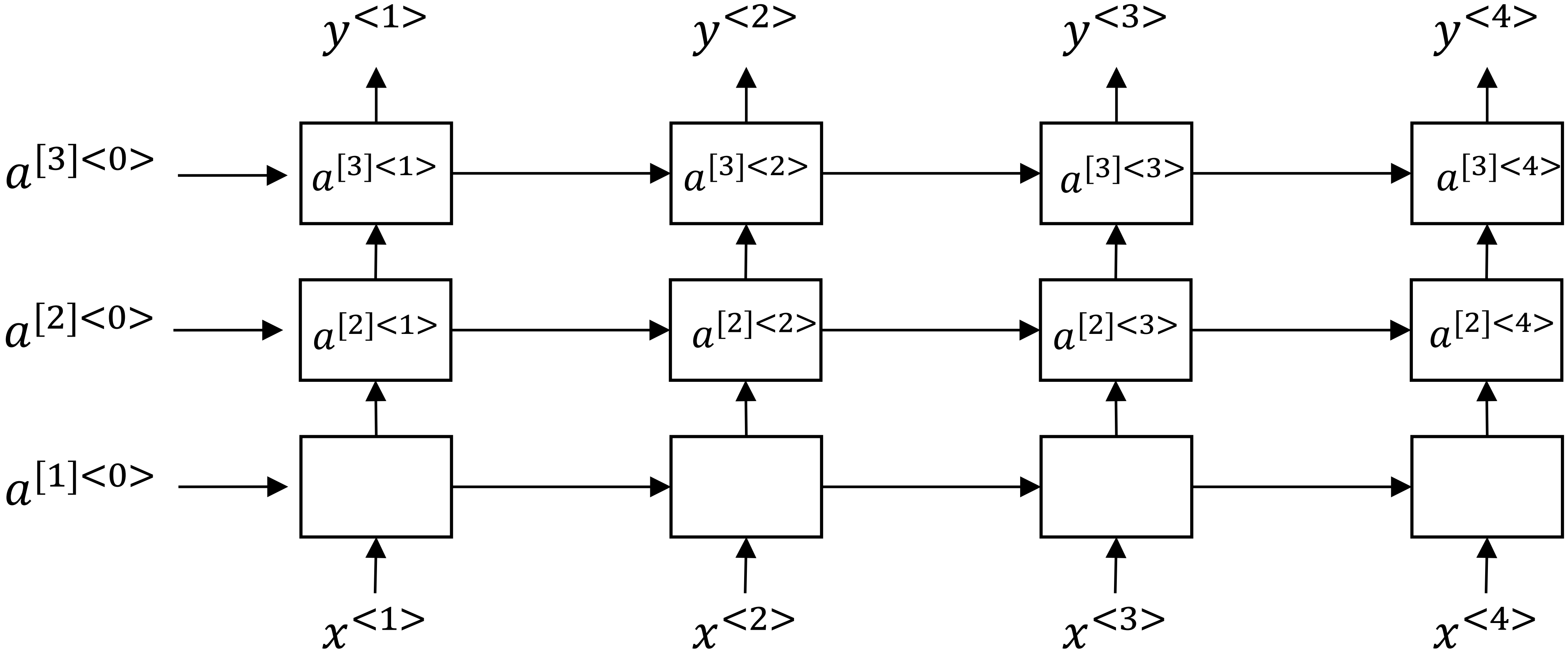

NLP and Word Embeddings

deeplearning.ai

Word representation

Word representation

V = [a, aaron, ..., zulu, <UNK>]

1-hot representation

$$
\begin{array}{cccccc}
\text{Man} & \text{Woman} & \text{King} & \text{Queen} & \text{Apple} & \text{Orange} \\
(5391) & (9853) & (4914) & (7157) & (456) & (6257) \\
\begin{bmatrix}0\\0\\0\\0\\\vdots\\1\\\vdots\\0\\0\end{bmatrix} &
\begin{bmatrix}0\\0\\0\\0\\0\\\vdots\\1\\\vdots\\0\end{bmatrix} &
\begin{bmatrix}0\\0\\0\\\vdots\\1\\\vdots\\0\\0\\0\end{bmatrix} &
\begin{bmatrix}0\\0\\0\\0\\0\\\vdots\\1\\\vdots\\0\end{bmatrix} &
\begin{bmatrix}0\\\vdots\\1\\\vdots\\0\\0\\0\\0\\0\end{bmatrix} &
\begin{bmatrix}0\\0\\0\\0\\0\\\vdots\\1\\\vdots\\0\end{bmatrix}
\end{array}
$$

I want a glass of orange ______.

I want a glass of apple______.

Featurized representation: word embedding

	Man (5391)	Woman (9853)	King (4914)	Queen (7157)	Apple (456)	Orange (6257)
			-0.95	0.97	0.00	0.01
			0.93	0.95	-0.01	0.00
			0.7	0.69	0.03	-0.02
			0.02	0.01	0.95	0.97

I want a glass of orange ______.

I want a glass of apple______.

Visualizing word embeddings

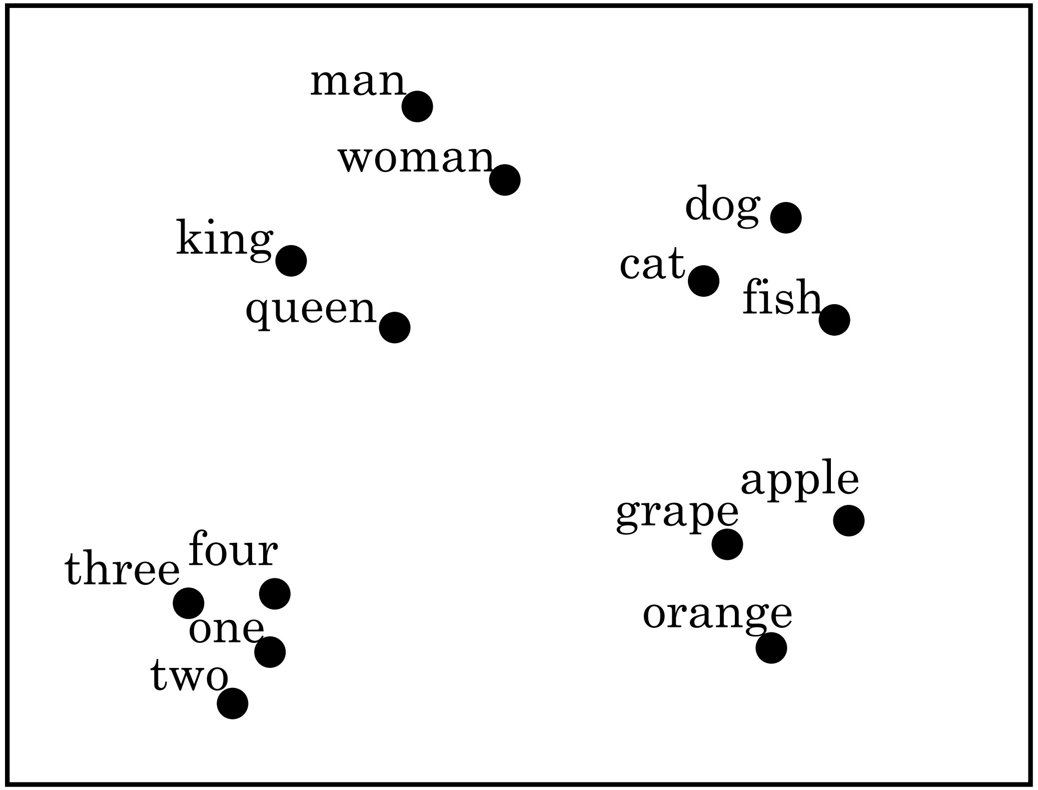

[van der Maaten and Hinton., 2008. Visualizing data using t-SNE]

NLP and Word Embeddings

deeplearning.ai

Using word embeddings

Named entity recognition example

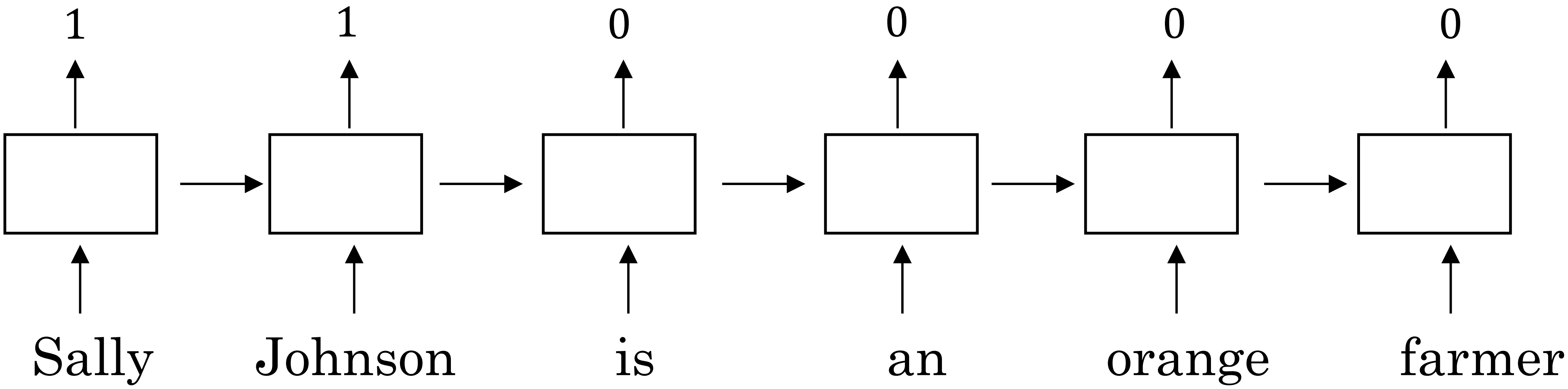

Robert Lin is an apple farmer

Transfer learning and word embeddings

1. Learn word embeddings from large text corpus. (1-100B words)

   (Or download pre-trained embedding online.)

2. Transfer embedding to new task with smaller training set. (say, 100k words)

3. Optional: Continue to finetune the word embeddings with new data.

Relation to face encoding

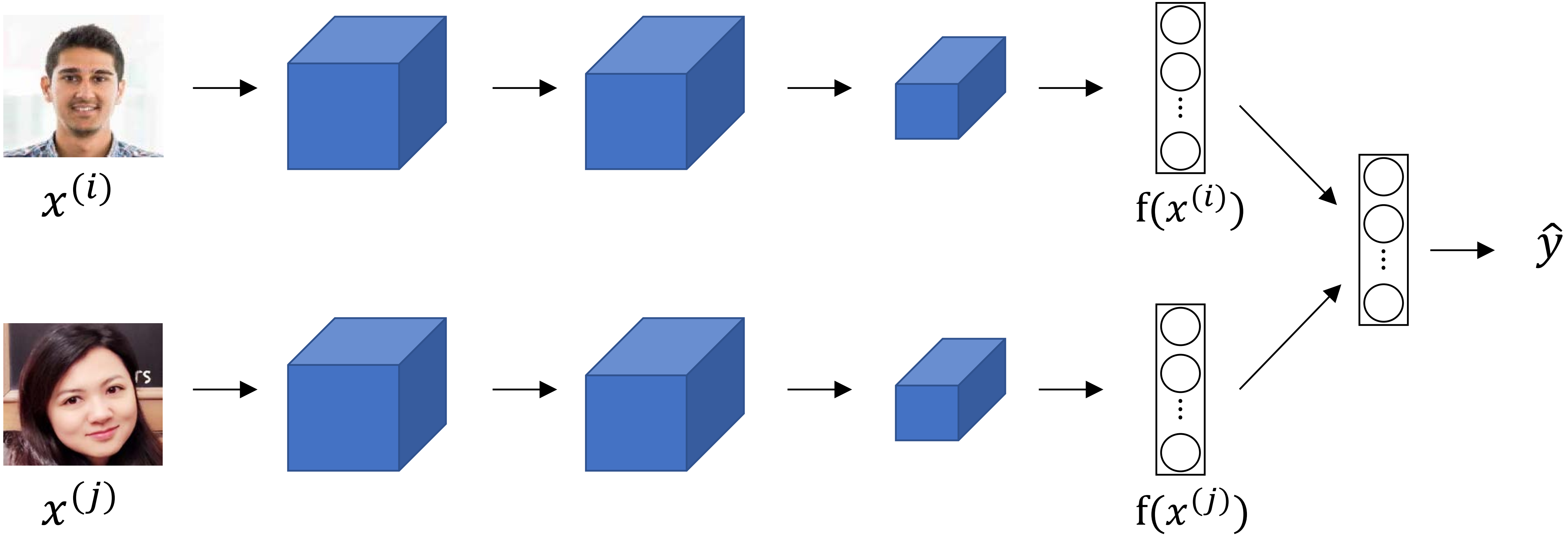

[Taigman et. al., 2014. DeepFace: Closing the gap to human level performance]

deeplearning.ai

NLP and Word Embeddings

Properties of word embeddings

Analogies

	Man (5391)	Woman (9853)	King (4914)	Queen (7157)	Apple (456)	Orange (6257)
Gender	-1	1	-0.95	0.97	0.00	0.01
Royal	0.01	0.02	0.93	0.95	-0.01	0.00
Age	0.03	0.02	0.70	0.69	0.03	-0.02
Food	0.09	0.01	0.02	0.01	0.95	0.97

[Mikolov et. al., 2013, Linguistic regularities in continuous space word representations]

Analogies using word vectors

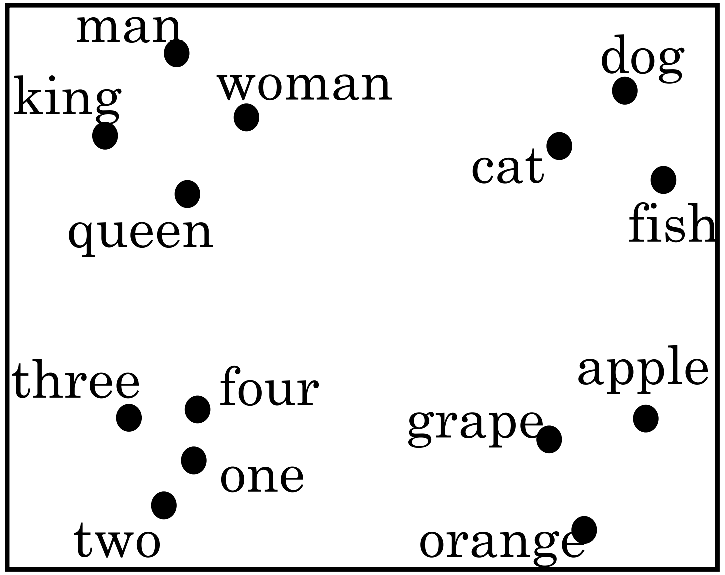

$$e_{man} - e_{woman} \approx e_{king} - e_{?}$$

Cosine similarity

$$sim(e_w, e_{king} - e_{man} + e_{woman})$$

Man:Woman as Boy:Girl

Ottawa:Canada as Nairobi:Kenya

Big:Bigger as Tall:Taller

Yen:Japan as Ruble:Russia

NLP and Word Embeddings

deeplearning.ai

Embedding matrix

Embedding matrix

In practice, use specialized function to look up an embedding.

deeplearning.ai

NLP and Word Embeddings

Learning word embeddings

Neural language model

I	want	a	glass	of	orange	______.
4343	9665	1	3852	6163	6257	

I $\quad o_{4343} \longrightarrow E \longrightarrow e_{4343}$

want $\quad o_{9665} \longrightarrow E \longrightarrow e_{9665}$

a $\quad o_{1} \longrightarrow E \longrightarrow e_{1}$

glass $\quad o_{3852} \longrightarrow E \longrightarrow e_{3852}$

of $\quad o_{6163} \longrightarrow E \longrightarrow e_{6163}$

orange $\quad o_{6257} \longrightarrow E \longrightarrow e_{6257}$

[Bengio et. al., 2003, A neural probabilistic language model]

Other context/target pairs

I want a glass of orange juice to go along with my cereal.

Context: Last 4 words.

4 words on left & right

Last 1 word

Nearby 1 word

deeplearning.ai

NLP and Word Embeddings

Word2Vec

Skip-grams

I want a glass of orange juice to go along with my cereal.

[Mikolov et. al., 2013. Efficient estimation of word representations in vector space.]

Model

Vocab size = 10,000k

Problems with softmax classification

$$p(t|c) = \frac{e^{\theta_t^T e_c}}{\sum_{j=1}^{10,000} e^{\theta_j^T e_c}}$$

How to sample the context c?

deeplearning.ai

NLP and Word Embeddings

Negative sampling

Defining a new learning problem

I want a glass of orange juice to go along with my cereal.

[Mikolov et. al., 2013. Distributed representation of words and phrases and their compositionality]

Model

Softmax: $$p(t|c) = \frac{e^{\theta_t^T e_c}}{\sum_{j=1}^{10,000} e^{\theta_j^T e_c}}$$

context	word	target?
orange	juice	1
orange	king	0
orange	book	0
orange	the	0
orange	of	0

Selecting negative examples

context	word	target?
orange	juice	1
orange	king	0
orange	book	0
orange	the	0
orange	of	0

NLP and Word Embeddings

GloVe word vectors

deeplearning.ai

GloVe (global vectors for word representation)

I want a glass of orange juice to go along with my cereal.

[Pennington et. al., 2014. GloVe: Global vectors for word representation]

Model

A note on the featurization view of word embeddings

	Man (5391)	Woman (9853)	King (4914)	Queen (7157)
Gender	-1	1	-0.95	0.97
Royal	0.01	0.02	0.93	0.95
Age	0.03	0.02	0.70	0.69
Food	0.09	0.01	0.02	0.01

$$\text{minimize} \sum_{i=1}^{10,000} \sum_{j=1}^{10,000} f(X_{ij}) \left(\theta_i^T e_j + b_i - b_j' - \log X_{ij}\right)^2$$

deeplearning.ai

NLP and Word Embeddings

Sentiment classification

Sentiment classification problem

x	y
The dessert is excellent.	★★★★☆
Service was quite slow.	★★☆☆☆
Good for a quick meal, but nothing special.	★★★☆☆
Completely lacking in good taste, good service, and good ambience.	★☆☆☆☆

Simple sentiment classification model

The	dessert	is	excellent	★★★★☆
8928	2468	4694	3180	

The $o_{8928} \longrightarrow E \longrightarrow e_{8928}$

desert $o_{2468} \longrightarrow E \longrightarrow e_{2468}$

is $o_{4694} \longrightarrow E \longrightarrow e_{4694}$

excellent $o_{3180} \longrightarrow E \longrightarrow e_{3180}$

"Completely lacking in good taste, good service, and good ambience."

RNN for sentiment classification

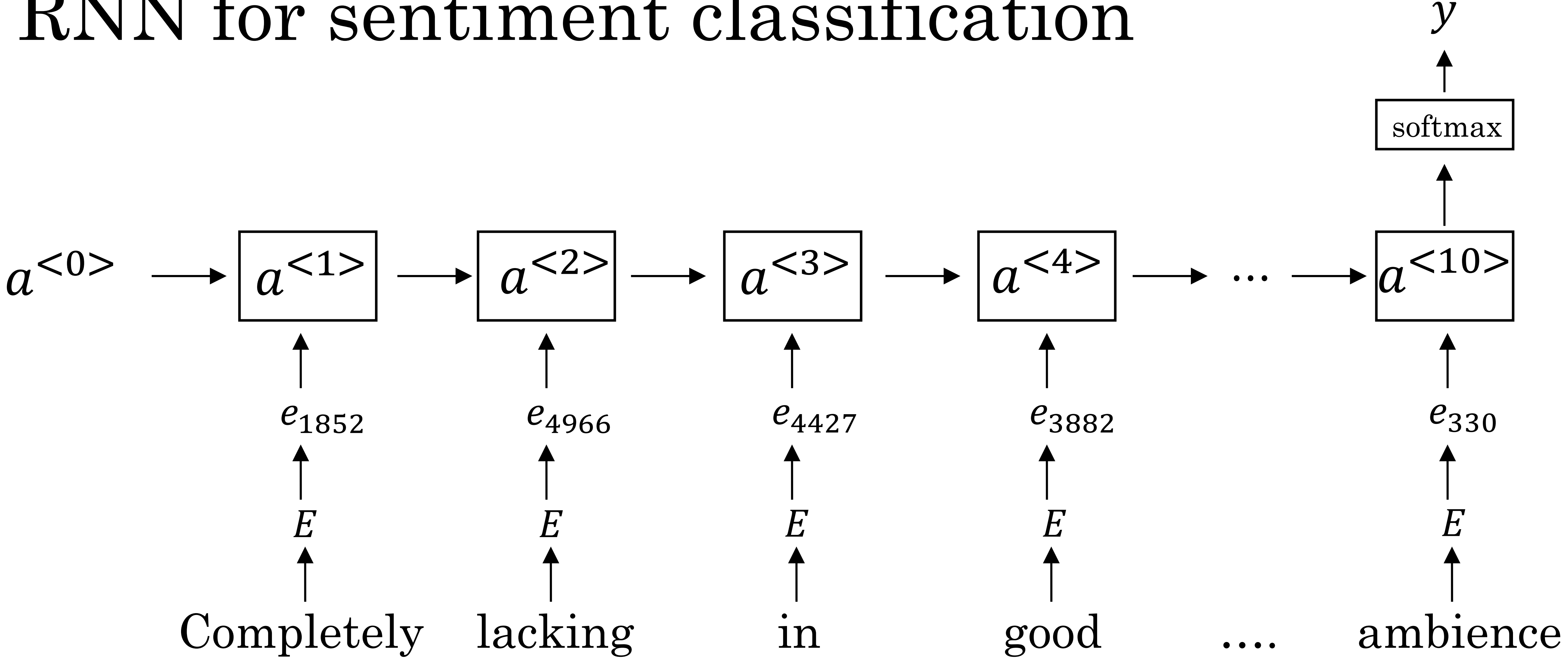

NLP and Word Embeddings

deeplearning.ai

Debiasing word embeddings

The problem of bias in word embeddings

Man:Woman as King:Queen

Man:Computer_Programmer as Woman:Homemaker

Father:Doctor as Mother:Nurse

Word embeddings can reflect gender, ethnicity, age, sexual orientation, and other biases of the text used to train the model.

[Bolukbasi et. al., 2016. Man is to computer programmer as woman is to homemaker? Debiasing word embeddings]

Addressing bias in word embeddings

1. Identify bias direction.

2. Neutralize: For every word that is not definitional, project to get rid of bias.

3. Equalize pairs.

[Bolukbasi et. al., 2016. Man is to computer programmer as woman is to homemaker? Debiasing word embeddings]

deeplearning.ai

Sequence to sequence models

Basic models

Sequence to sequence model

$x^{<1>}$ $x^{<2>}$ $x^{<3>}$ $x^{<4>}$ $x^{<5>}$

Jane visite l’Afrique en septembre

$\longrightarrow$ Jane is visiting Africa in September.

$y^{<1>}$ $y^{<2>}$ $y^{<3>}$ $y^{<4>}$ $y^{<5>}$ $y^{<6>}$

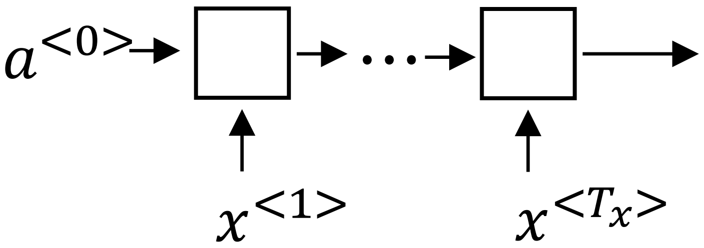

[Sutskever et al., 2014. Sequence to sequence learning with neural networks]

[Cho et al., 2014. Learning phrase representations using RNN encoder-decoder for statistical machine translation]

Image captioning

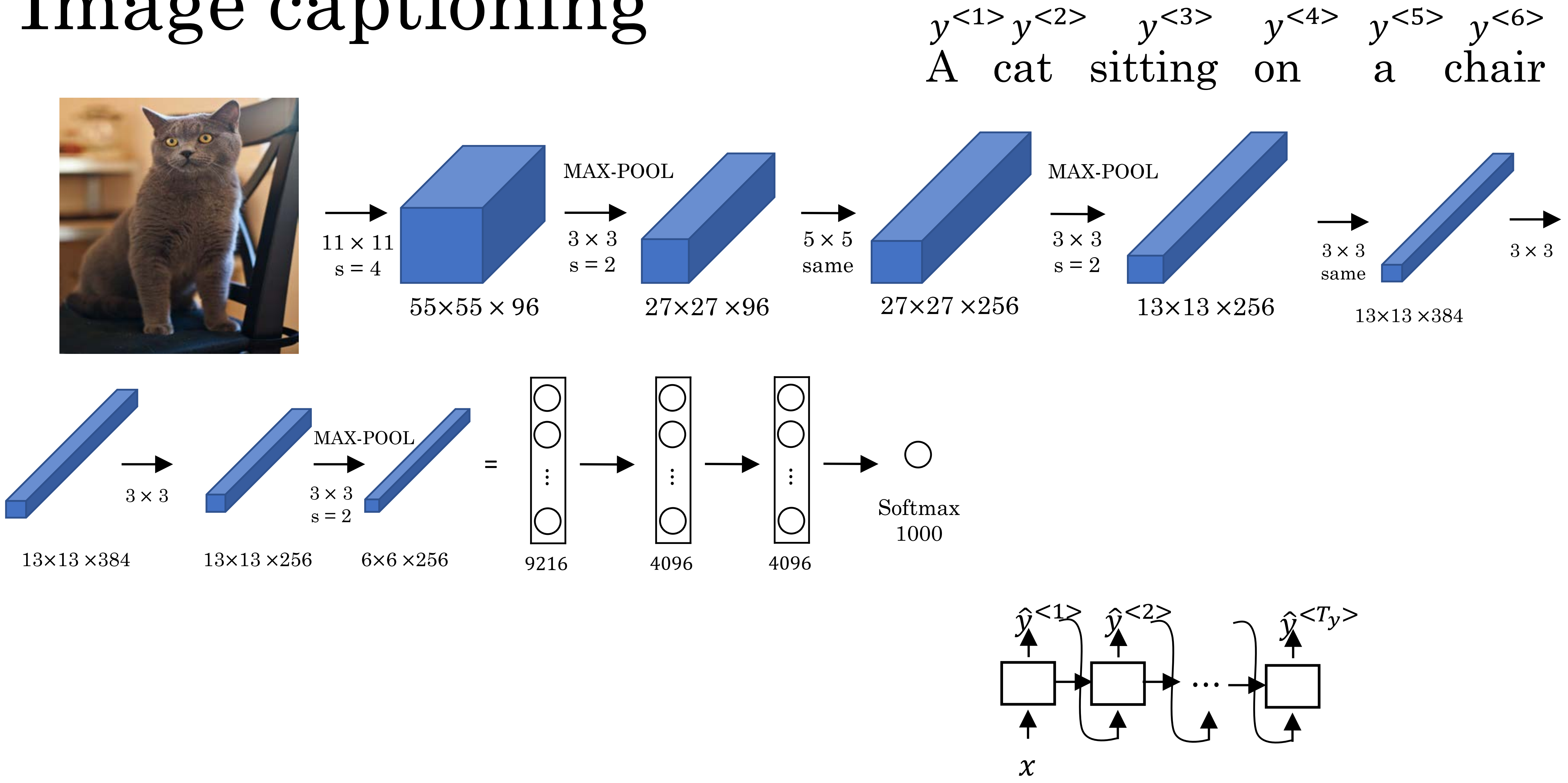

[Mao et. al., 2014. Deep captioning with multimodal recurrent neural networks]
[Vinyals et. al., 2014. Show and tell: Neural image caption generator]
[Karpathy and Li, 2015. Deep visual-semantic alignments for generating image descriptions]

deeplearning.ai

Sequence to sequence models

Picking the most likely sentence

Machine translation as building a conditional language model

Language model:

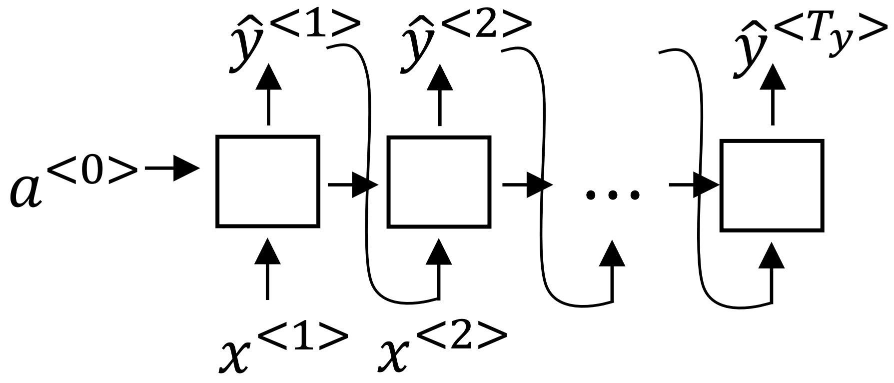

Machine translation:

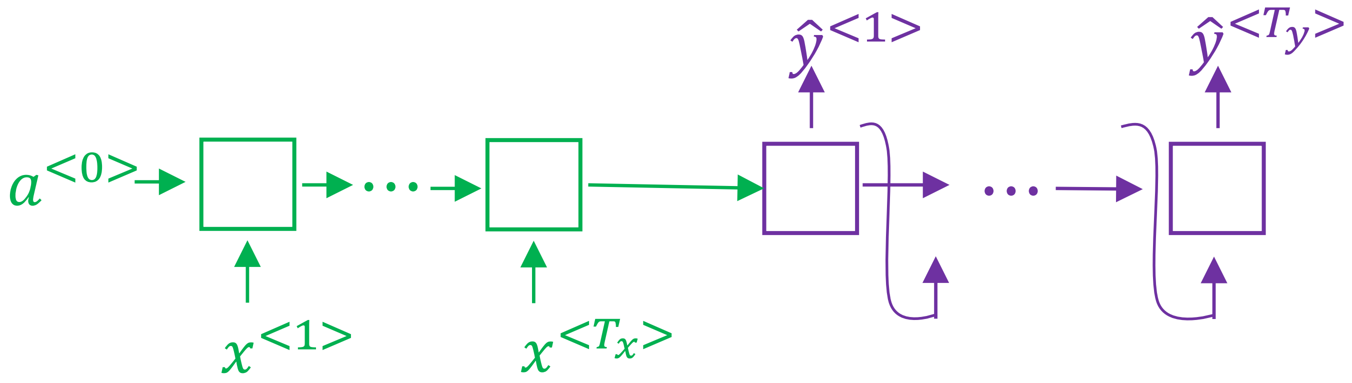

Finding the most likely translation

Jane visite l'Afrique en septembre. $P(y^{<1>}, \dots, y^{<T_y>} \mid x)$

→ Jane is visiting Africa in September.

→ Jane is going to be visiting Africa in September.

→ In September, Jane will visit Africa.

→ Her African friend welcomed Jane in September.

$$\arg\max_{y^{<1>}, \dots, y^{<T_y>}} P(y^{<1>}, \dots, y^{<T_y>} \mid x)$$

Why not a greedy search?

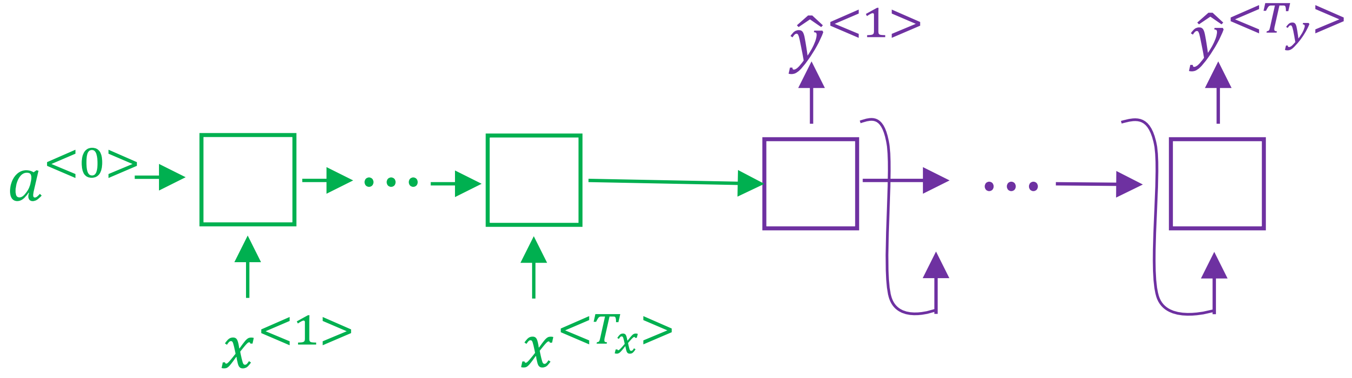

→ Jane is visiting Africa in September.

→ Jane is going to be visiting Africa in September.

deeplearning.ai

Sequence to sequence models

Beam search

Beam search algorithm

Step 1

$$10000 \begin{bmatrix} \text{a} \\ \vdots \\ \text{in} \\ \vdots \\ \text{jane} \\ \vdots \\ \text{september} \\ \vdots \\ \text{zulu} \end{bmatrix}$$

$P(y^{<1>} \mid x)$

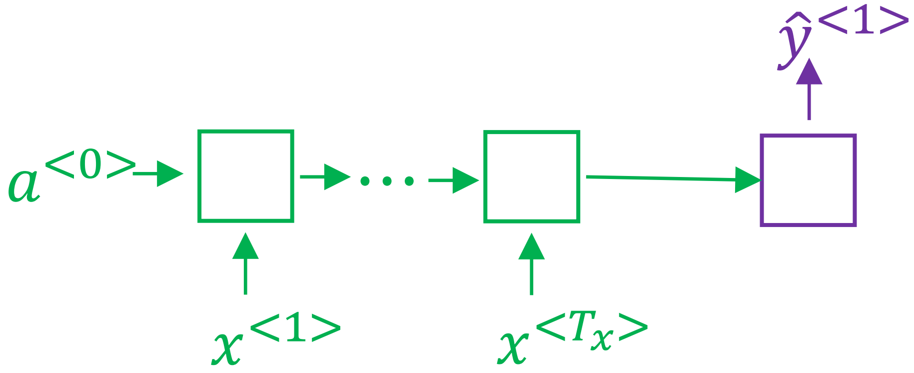

Beam search algorithm

Step 1 Step 2

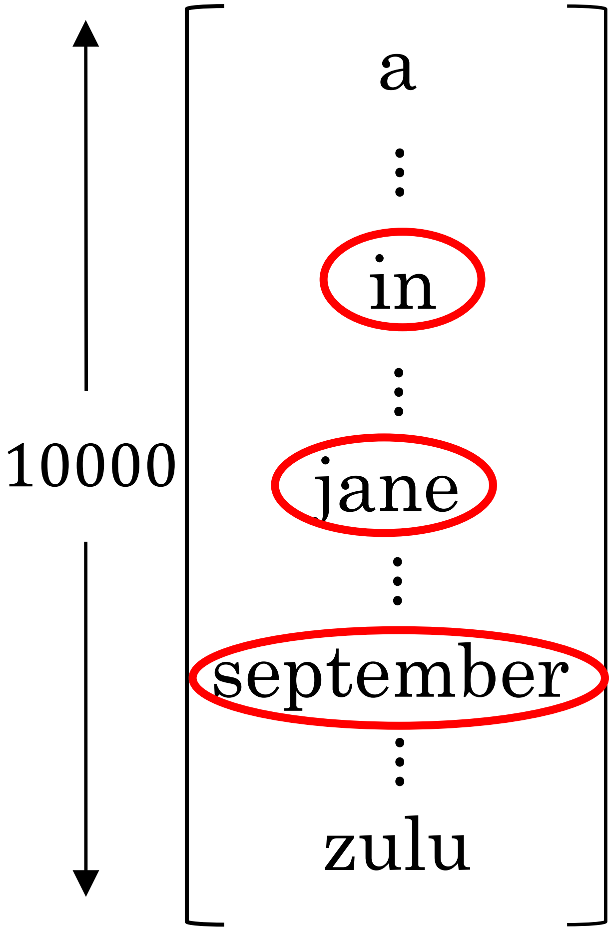

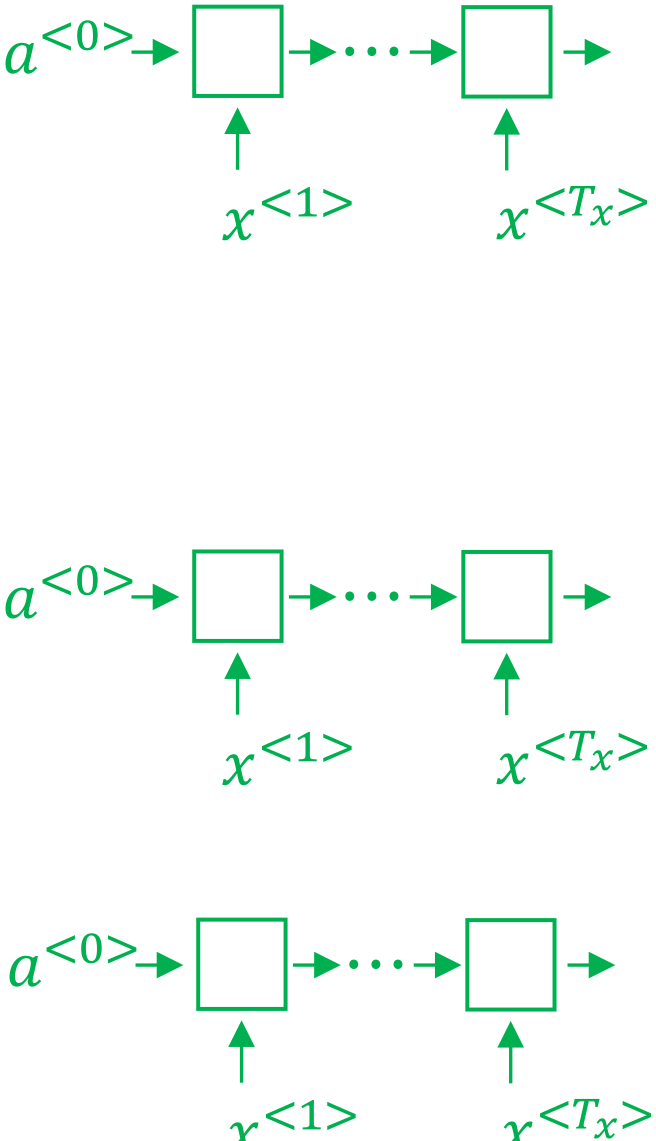

Beam search ($B = 3$)

in september

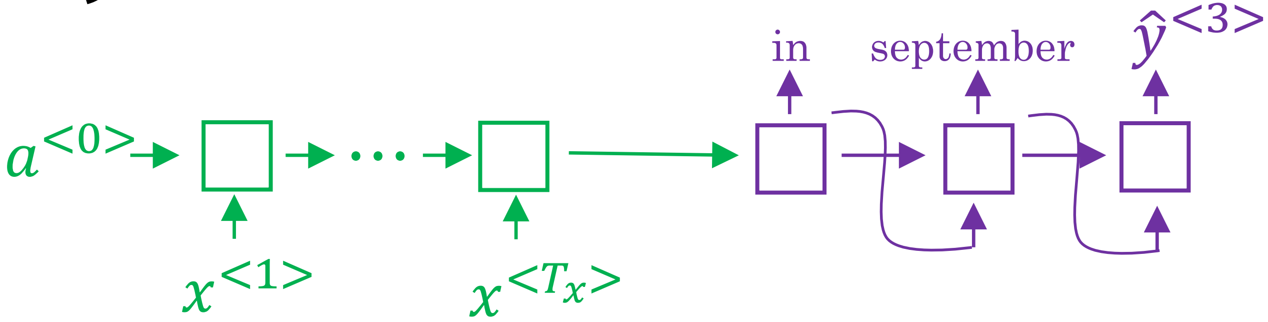

jane is

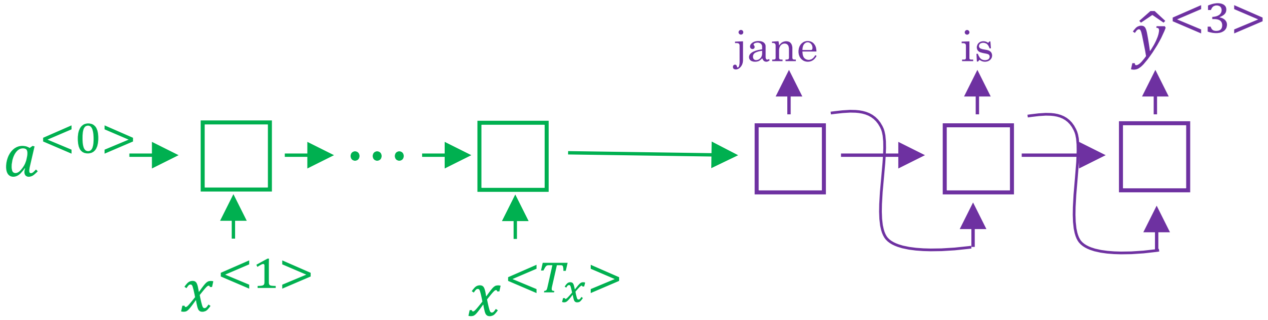

jane visits

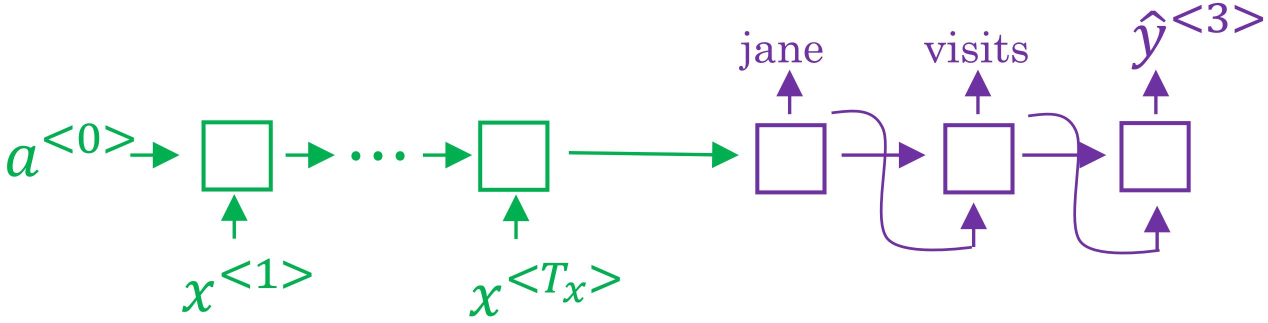

$P(y^{<1>}, y^{<2>} | x)$ jane visits africa in september. <EOS>

deeplearning.ai

Sequence to sequence models

Refinements to beam search

Length normalization

$$\arg\max_{y} \prod_{t=1}^{T_y} P(y^{<t>} \mid x, y^{<1>}, \ldots, y^{<t-1>})$$

$$\arg\max_{y} \sum_{t=1}^{T_y} \log P(y^{<t>} \mid x, y^{<1>}, \ldots, y^{<t-1>})$$

$$\sum_{t=1}^{T_y} \log P(y^{<t>} \mid x, y^{<1>}, \ldots, y^{<t-1>})$$

Beam search discussion

Beam width B?

Unlike exact search algorithms like BFS (Breadth First Search) or DFS (Depth First Search), Beam Search runs faster but is not guaranteed to find exact maximum for $\arg\max_y P(y|x)$.

deeplearning.ai

Sequence to sequence models

Error analysis on beam search

Example

Jane visite l'Afrique en septembre.

Human: Jane visits Africa in September.

Algorithm: Jane visited Africa last September.

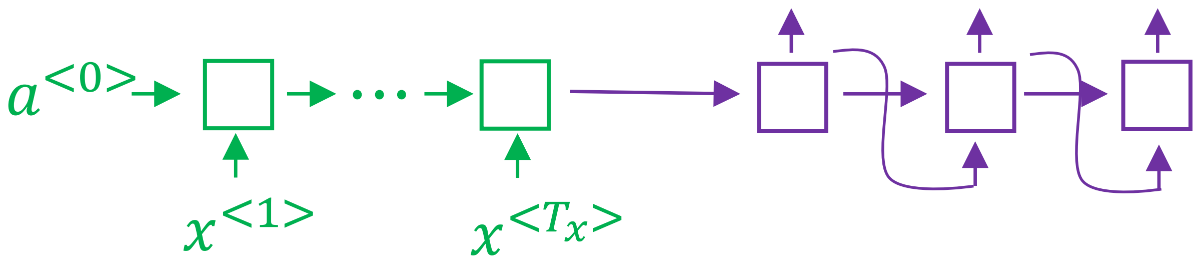

Error analysis on beam search

Human: Jane visits Africa in September. (y^*)

Algorithm: Jane visited Africa last September. ($\hat{y}$)

Case 1:

Beam search chose $\hat{y}$. But y^* attains higher $P(y|x)$.

Conclusion: Beam search is at fault.

Case 2:

y^* is a better translation than $\hat{y}$. But RNN predicted $P(y^*|x) < P(\hat{y}|x)$.

Conclusion: RNN model is at fault.

Error analysis process

Human	Algorithm	$P(y^*\|x)$	$P(\hat{y}\|x)$	At fault?
Jane visits Africa in September.	Jane visited Africa last September.			

Figures out what faction of errors are “due to” beam search vs. RNN model

deeplearning.ai

Sequence to sequence models

Bleu score (optional)

Evaluating machine translation

French: Le chat est sur le tapis.

Reference 1: The cat is on the mat.

Reference 2: There is a cat on the mat.

MT output: the the the the the the the.

Precision: Modified precision:

[Papineni et. al., 2002. Bleu: A method for automatic evaluation of machine translation]

Bleu score on bigrams

Example: Reference 1: The cat is on the mat.

Reference 2: There is a cat on the mat.

MT output: The cat the cat on the mat.

the cat

cat the

cat on

on the

the mat

[Papineni et. al., 2002. Bleu: A method for automatic evaluation of machine translation]

Bleu score on unigrams

Example: Reference 1: The cat is on the mat.

Reference 2: There is a cat on the mat.

MT output: The cat the cat on the mat.

$$p_1 = \frac{\sum_{unigram \in \hat{y}} count_{clip}\,(unigram)}{\sum_{unigram \in \hat{y}} count\,(unigram)} \qquad p_n = \frac{\sum_{ngram \in \hat{y}} count_{clip}\,(ngram)}{\sum_{ngram \in \hat{y}} count\,(ngram)}$$

[Papineni et. al., 2002. Bleu: A method for automatic evaluation of machine translation]

Bleu details

p_n = Bleu score on n-grams only

Combined Bleu score:

$$\text{BP} = \begin{cases} 1 & \text{if MT\_output\_length} > \text{reference\_output\_length} \\ \exp(1 - \text{MT\_output\_length}/\text{reference\_output\_length}) & \text{otherwise} \end{cases}$$

[Papineni et. al., 2002. Bleu: A method for automatic evaluation of machine translation]

deeplearning.ai

Sequence to sequence models

Attention model intuition

The problem of long sequences

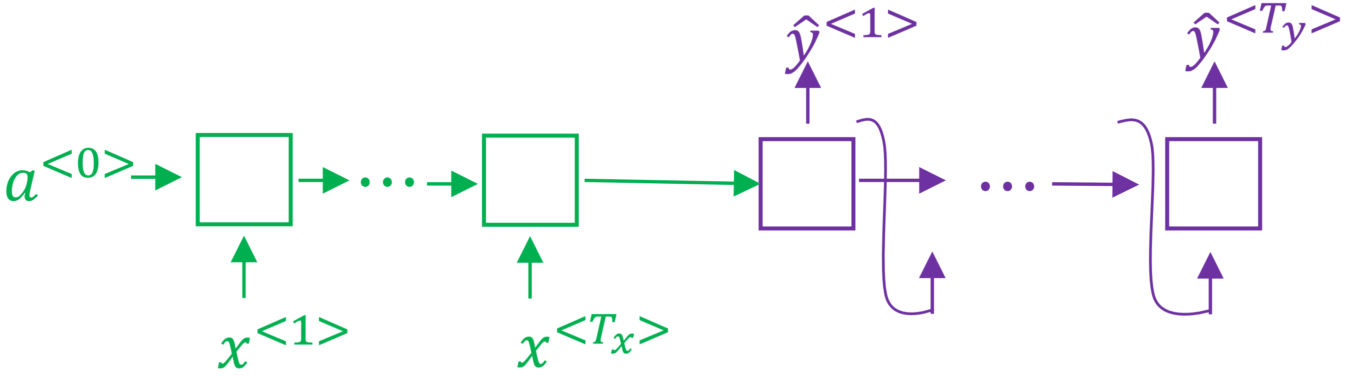

Jane s'est rendue en Afrique en septembre dernier, a apprécié la culture et a rencontré beaucoup de gens merveilleux; elle est revenue en parlant comment son voyage était merveilleux, et elle me tente d'y aller aussi.

Jane went to Africa last September, and enjoyed the culture and met many wonderful people; she came back raving about how wonderful her trip was, and is tempting me to go too.

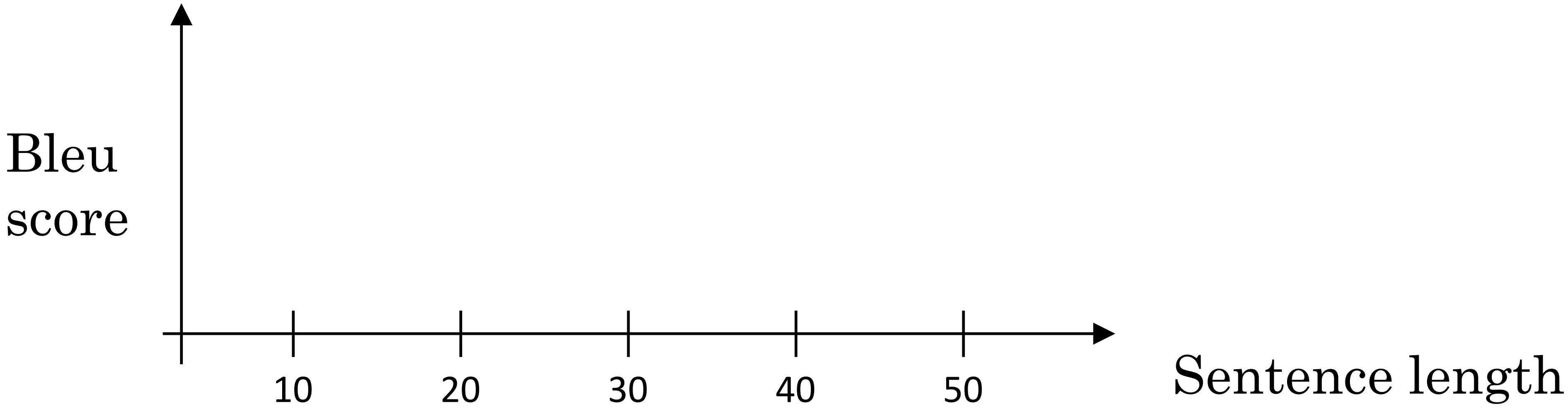

Attention model intuition

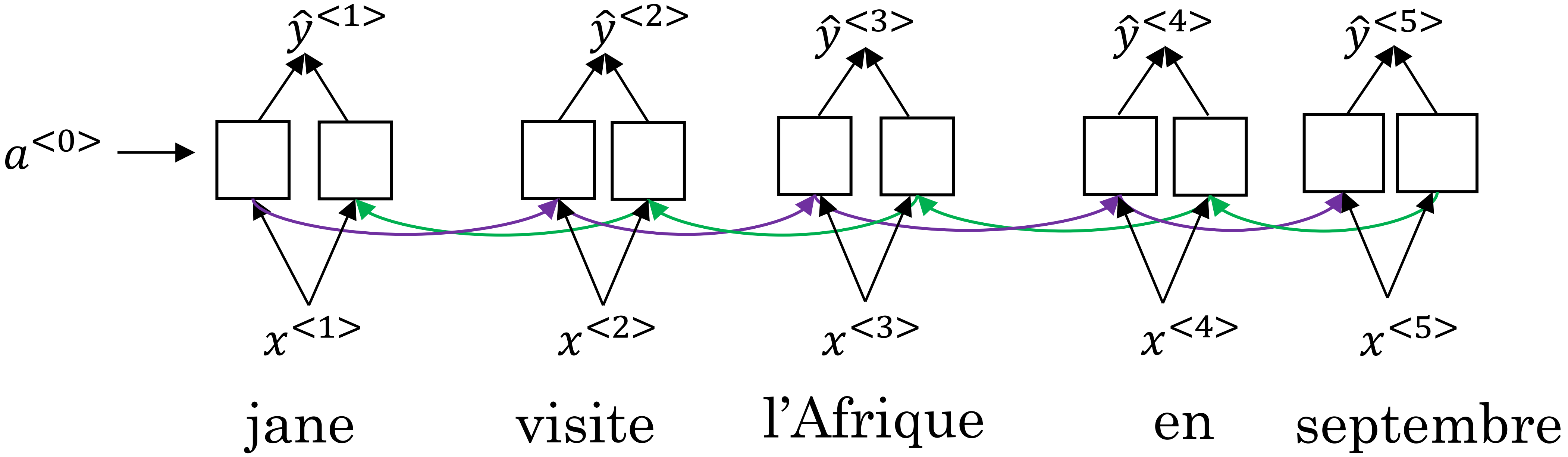

[Bahdanau et. al., 2014. Neural machine translation by jointly learning to align and translate]

deeplearning.ai

Sequence to sequence models

Attention model

Attention model

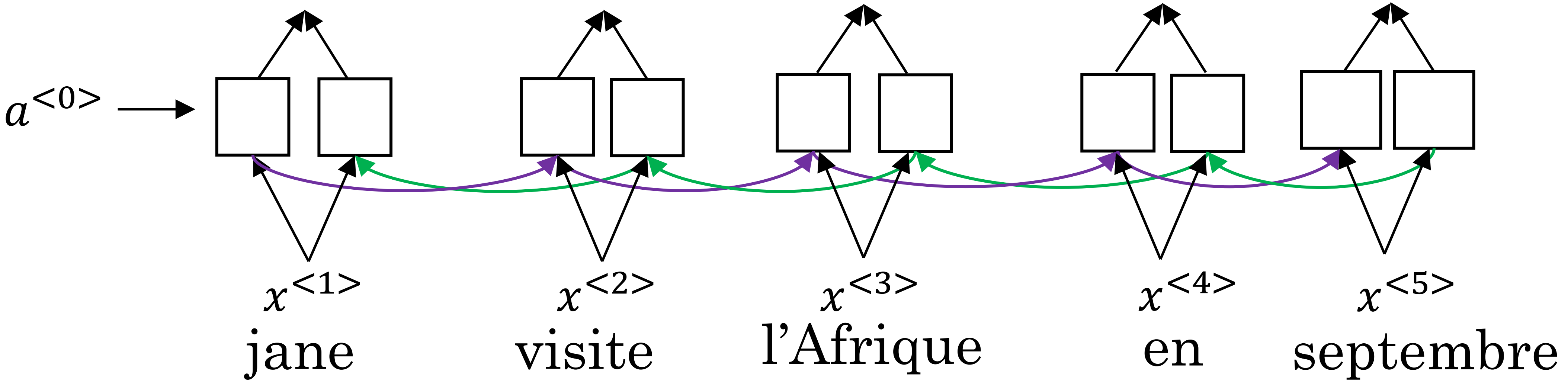

[Bahdanau et. al., 2014. Neural machine translation by jointly learning to align and translate]

Computing attention $\alpha^{<t,t'>}$

$\alpha^{<t,t'>}$ = amount of attention $y^{<t>}$ should pay to $a^{<t'>}$

$$\alpha^{<t,t'>} = \frac{\exp(e^{<t,t'>})}{\sum_{t'=1}^{T_x} \exp(e^{<t,t'>})}$$

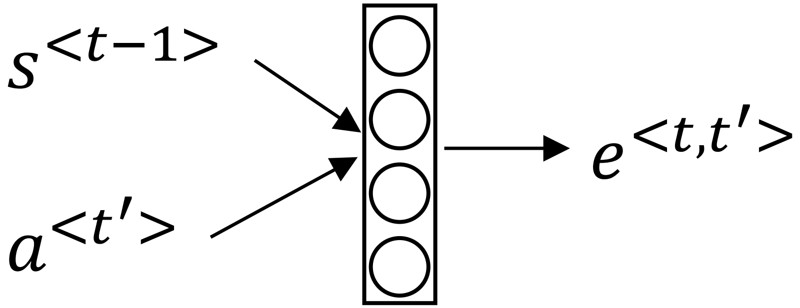

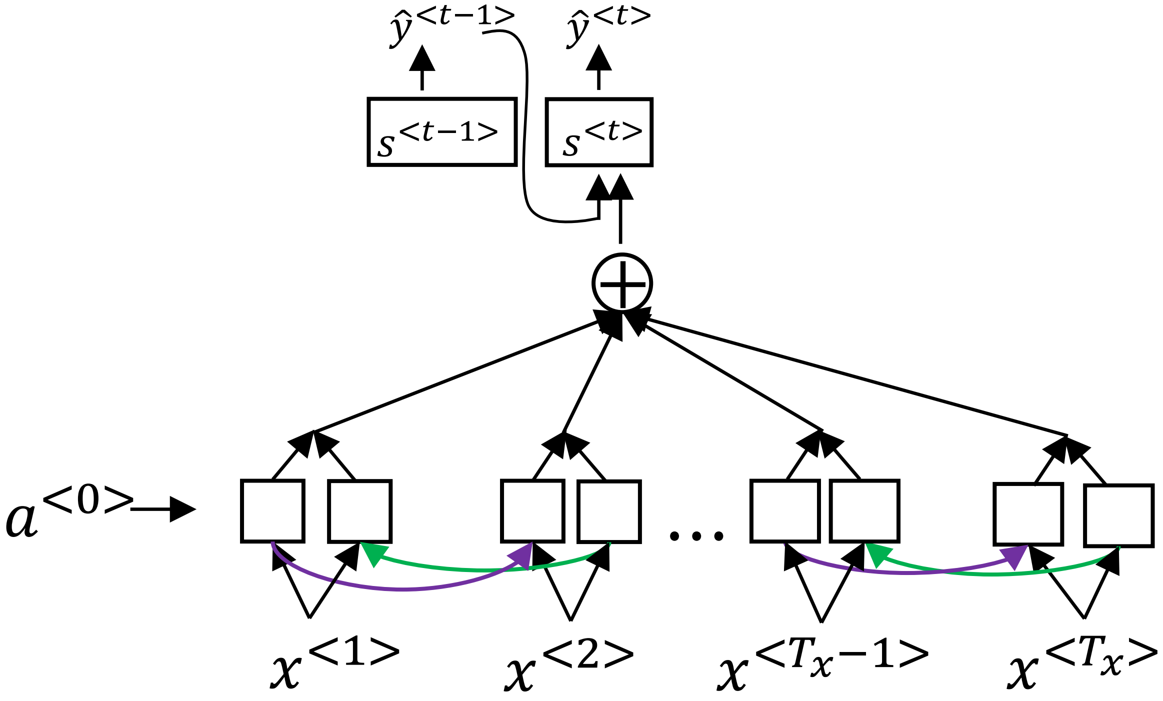

[Bahdanau et. al., 2014. Neural machine translation by jointly learning to align and translate]

[Xu et. al., 2015. Show, attend and tell: Neural image caption generation with visual attention]

Attention examples

July 20th 1969 $\longrightarrow$ 1969 – 07 – 20

23 April, 1564 $\longrightarrow$ 1564 – 04 – 23

Visualization of $\alpha^{<t,t'>}$:

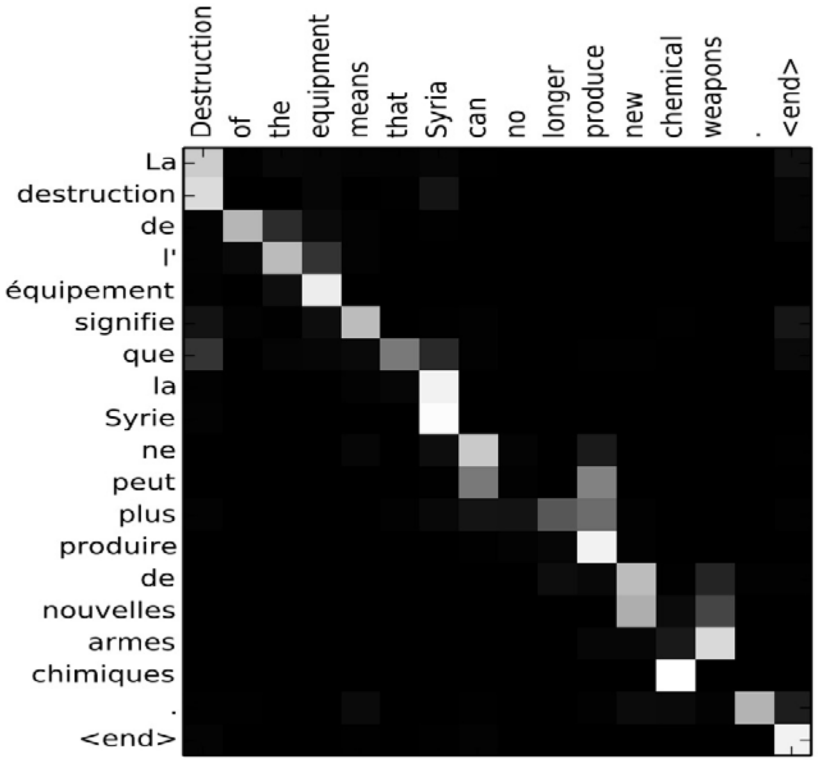

deeplearning.ai

Audio data

Speech recognition

Speech recognition problem

x

audio clip

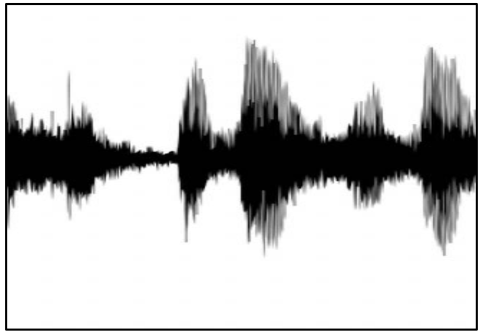

$\downarrow$

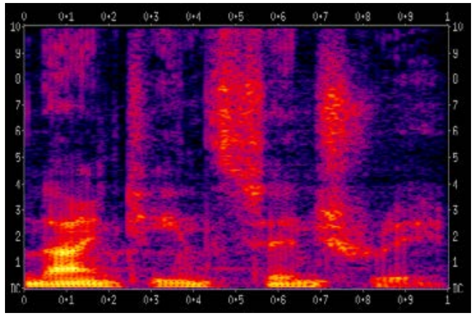

y

transcript

"the quick brown fox"

Attention model for speech recognition

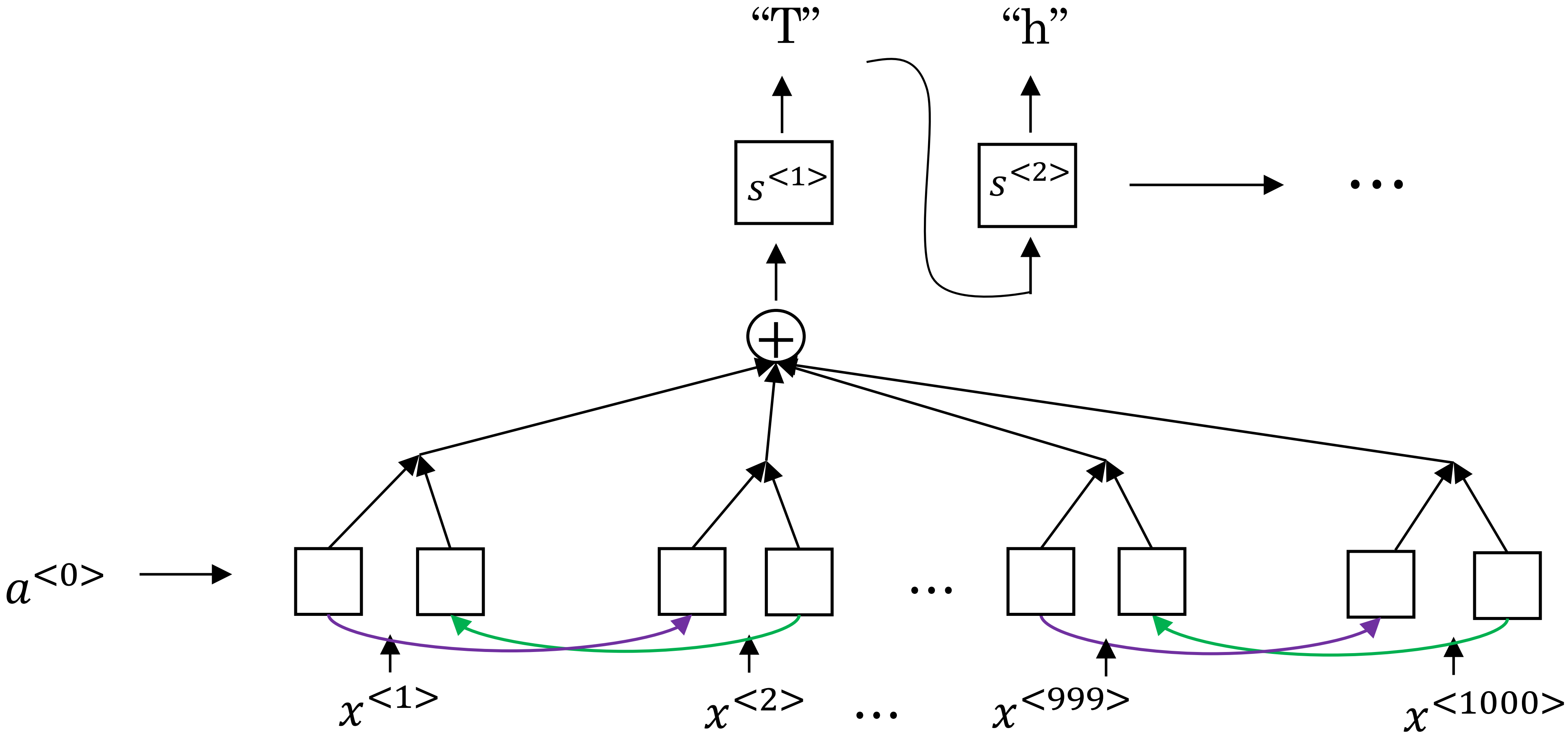

CTC cost for speech recognition

(Connectionist temporal classification)

"the quick brown fox"

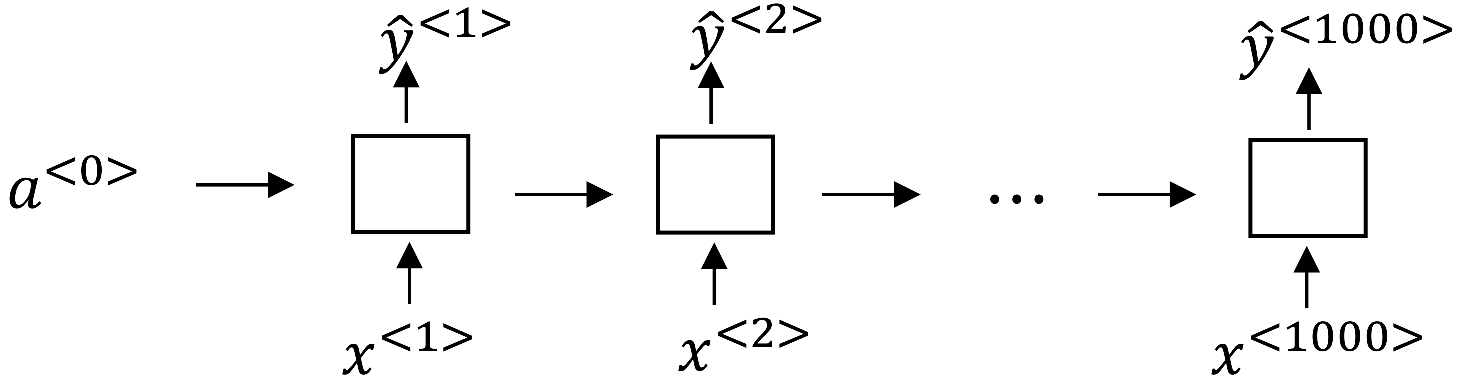

Basic rule: collapse repeated characters not separated by "blank"

[Graves et al., 2006. Connectionist Temporal Classification: Labeling unsegmented sequence data with recurrent neural networks]

deeplearning.ai

Audio data

Trigger word detection

What is trigger word detection?

Amazon Echo
(Alexa)

Baidu DuerOS
(xiaodunihao)

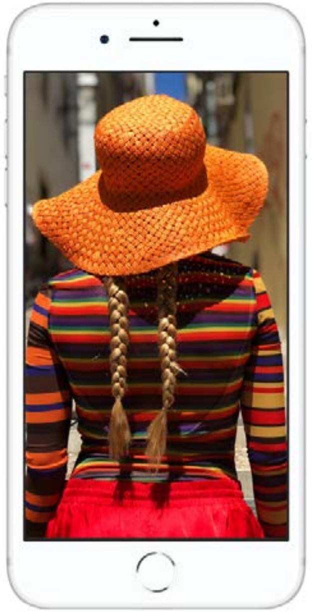

Apple Siri
(Hey Siri)

Google Home
(Okay Google)

Trigger word detection algorithm

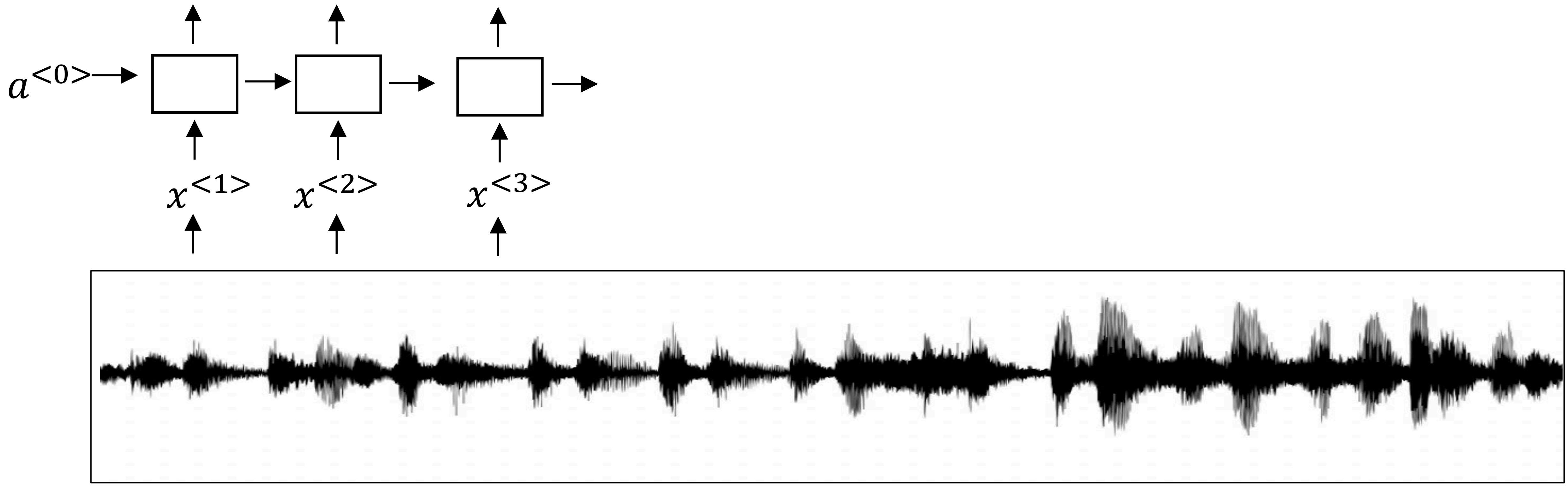

deeplearning.ai

Conclusion

Summary and thank you

Specialization outline

1. Neural Networks and Deep Learning
2. Improving Deep Neural Networks: Hyperparameter tuning, Regularization and Optimization
3. Structuring Machine Learning Projects
4. Convolutional Neural Networks
5. Sequence Models

Deep learning is a super power

Please buy this from shutterstock and replace in final video.

www.shutterstock.com · 331201091

Thank you.

-Andrew Ng