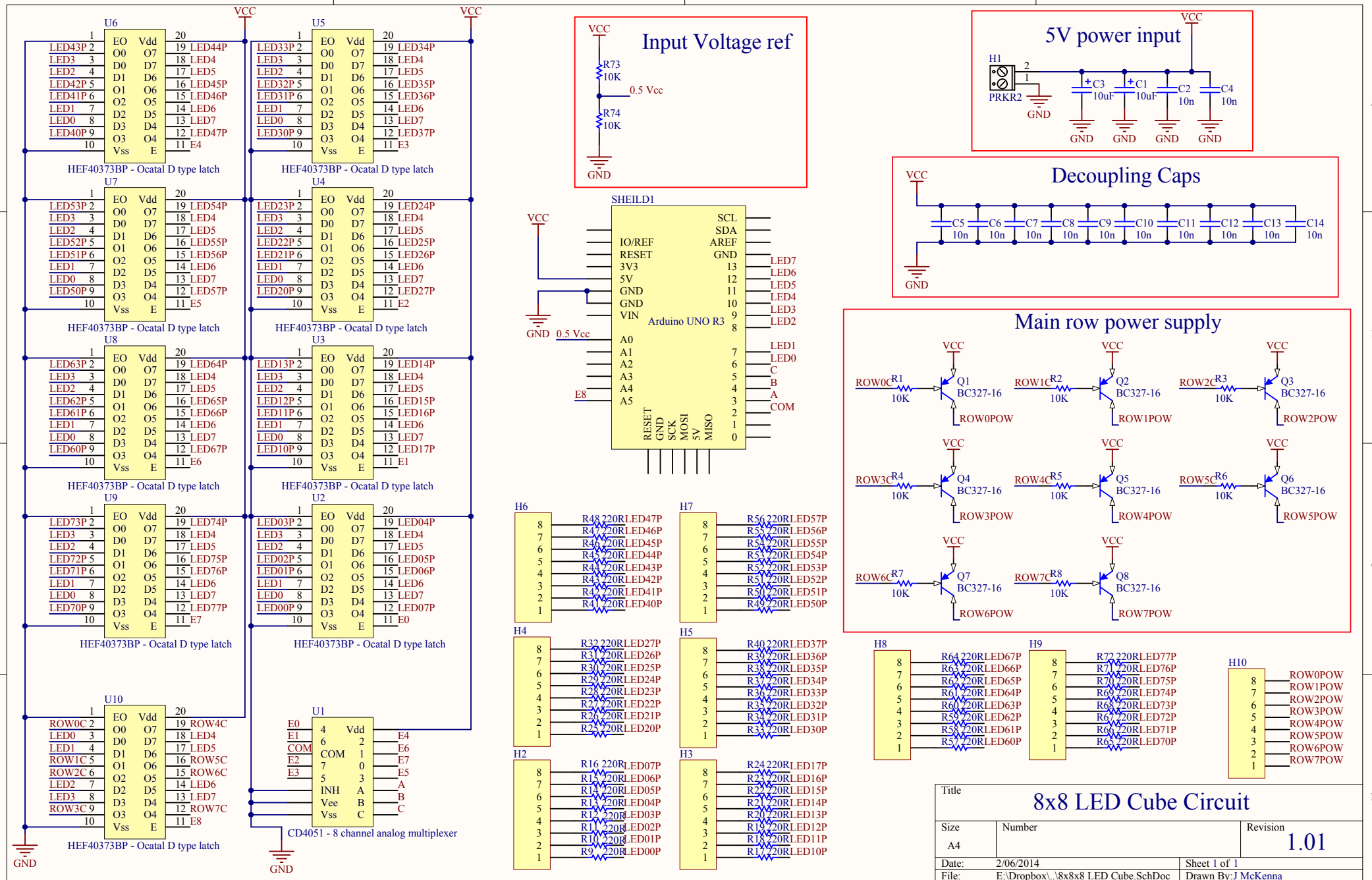
U6
U5
U7
U4
U8
U3
U9
U2
U10
U1
HEF40373BP - Ocatal D type latch
CD4051 - 8 channel analog multiplexer
VCC
GND
Input Voltage ref
R73 10K
R74 10K
0.5 Vcc
SHEILD1
Arduino UNO R3
IO/REF
RESET
3V3
5V
GND
VIN
A0
A1
A2
A3
A4
A5
SCL
SDA
AREF
RESET
GND
SCK
MOSI
5V
MISO
E8
H6
H7
H4
H5
H2
H3
5V power input
H1
PRKR2
C3 10uF
C1 10uF
C2 10n
C4 10n
Decoupling Caps
C5 10n
C6 10n
C7 10n
C8 10n
C9 10n
C10 10n
C11 10n
C12 10n
C13 10n
C14 10n
Main row power supply
ROW0C R1 10K
ROW1C R2 10K
ROW2C R3 10K
ROW3C R4 10K
ROW4C R5 10K
ROW5C R6 10K
ROW6C R7 10K
ROW7C R8 10K
Q1 BC327-16
Q2 BC327-16
Q3 BC327-16
Q4 BC327-16
Q5 BC327-16
Q6 BC327-16
Q7 BC327-16
Q8 BC327-16
ROW0POW
ROW1POW
ROW2POW
ROW3POW
ROW4POW
ROW5POW
ROW6POW
ROW7POW
H8
H9
H10
Title
8x8 LED Cube Circuit
Size
A4
Number
Revision
1.01
Date: 2/06/2014
Sheet 1 of 1
File: E:\Dropbox\..\8x8x8 LED Cube.SchDoc
Drawn By: J McKenna