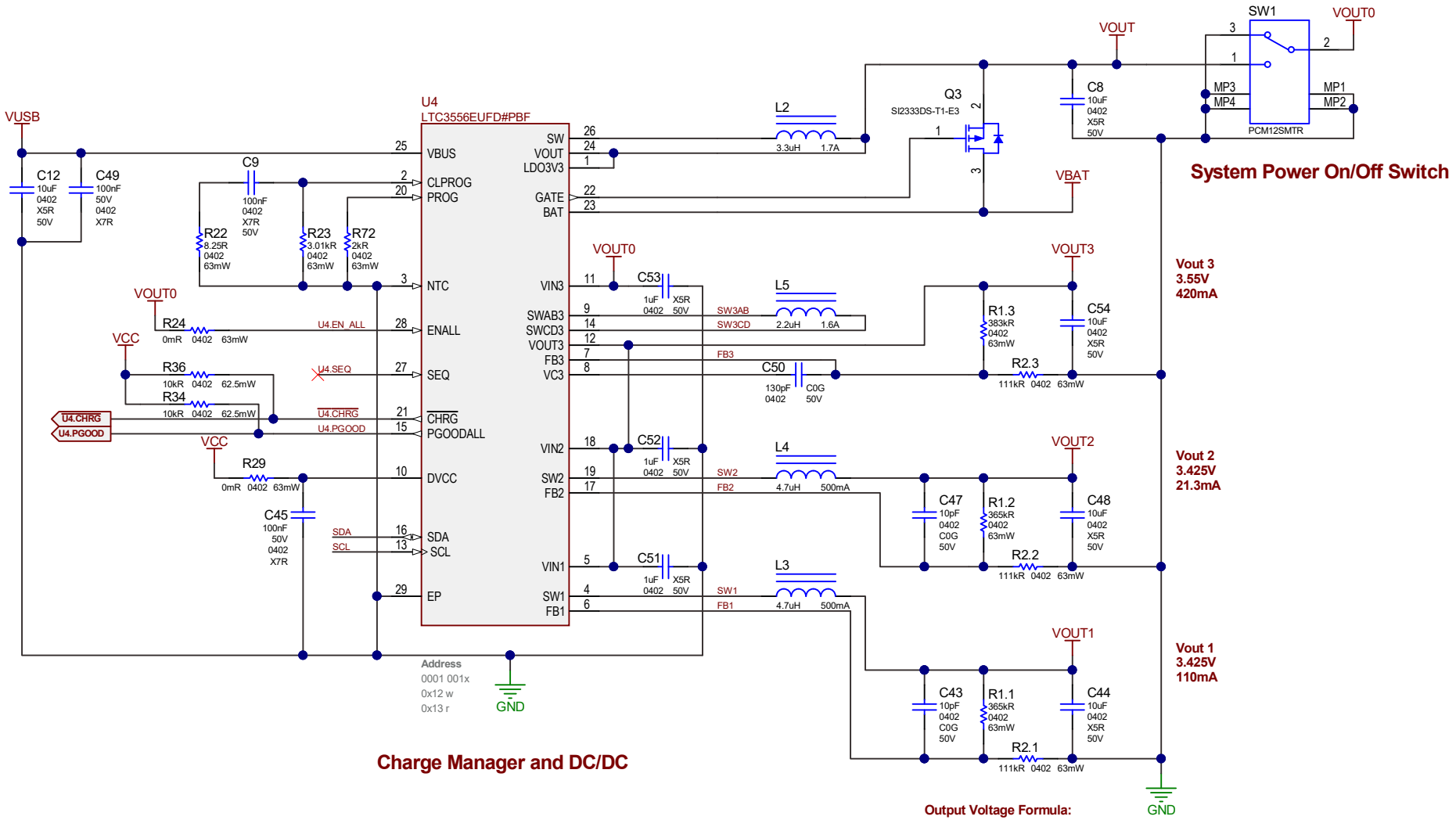

Project Title: Confidential		Date: 1/24/2020	
Project Number: UAA1-A0-001	Sheet Title: LTC3556		
Designed for: Confidential	Assembly Variant: [No Variations]		
Engineer: DML	Revision: E1	Size: Letter	
Drawn by: Melendez	Sheet 1 of 1		
File: UAA1-A0-001-E1-PowerReview.SchDoc			
© Upstream Audio And Acoustics 2020		http://www.upstreamaudio.com	

UPSTREAM AUDIO AND ACOUSTICS