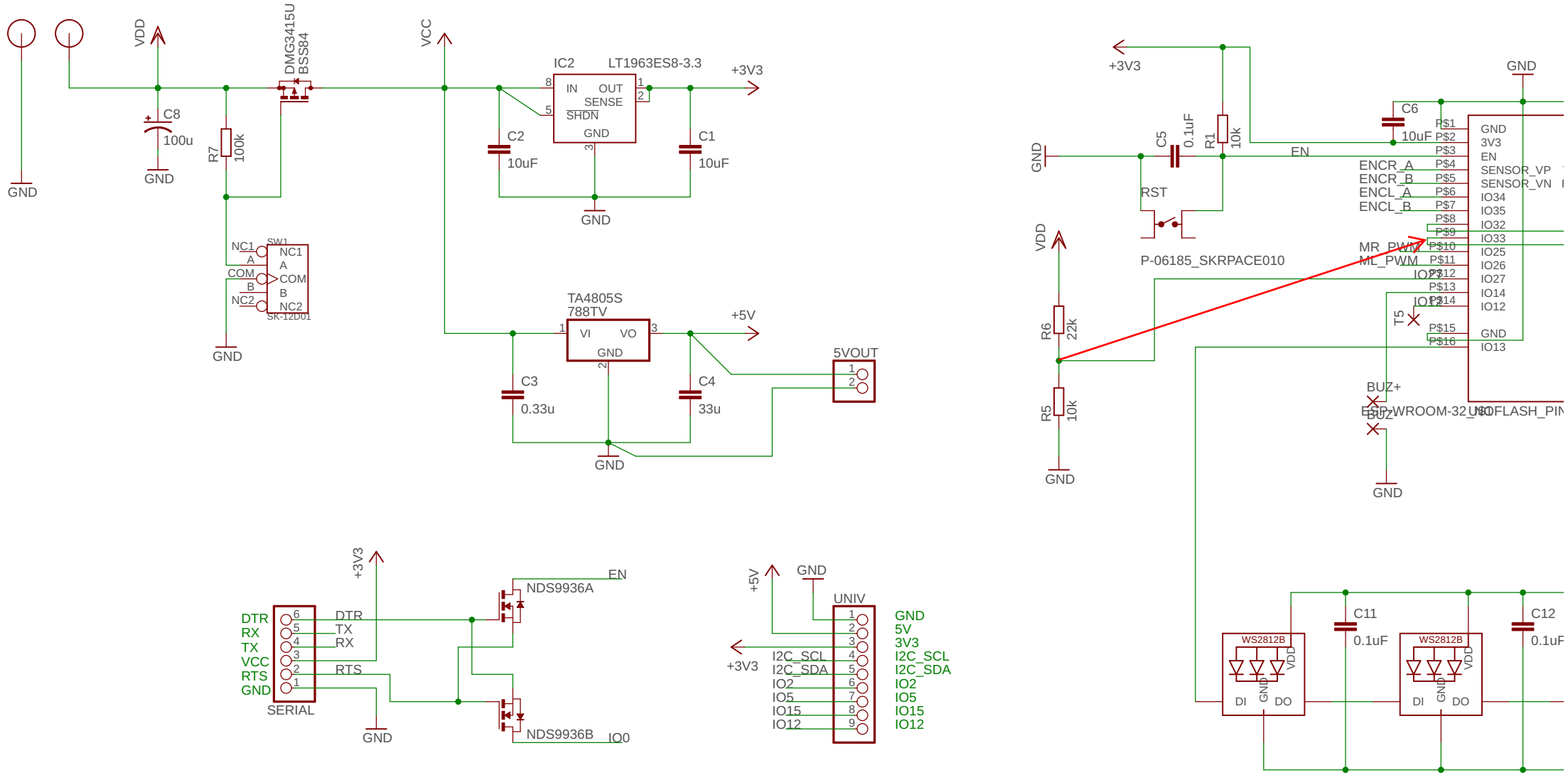
VDD
DMG3415U
BSS84
VCC
IC2
LT1963ES8-3.3
IN
OUT
SENSE
SHDN
GND
+3V3
C8
100u
R7
100k
C2
10uF
C1
10uF
GND
SW1
NC1
A
COM
B
NC2
SK-12D01
TA4805S
788TV
VI
VO
+5V
C3
0.33u
C4
33u
5VOUT
+3V3
C5
0.1uF
R1
10k
EN
C6
10uF
RST
P-06185_SKRPACE010
ENCR_A
ENCR_B
ENCL_A
ENCL_B
MR_PWM
ML_PWM
IO23
IO22
T5
BUZ+
BUZ-
ESP-WROOM-32_U0FLASH_PIN
R6
22k
R5
10k
P$1
P$2
P$3
P$4
P$5
P$6
P$7
P$8
P$9
P$10
P$11
P$12
P$13
P$14
P$15
P$16
3V3
SENSOR_VP
SENSOR_VN
IO34
IO35
IO32
IO33
IO25
IO26
IO27
IO14
IO12
IO13
DTR
RX
TX
VCC
RTS
SERIAL
NDS9936A
NDS9936B
IO0
+5V
UNIV
I2C_SCL
I2C_SDA
IO2
IO5
IO15
IO12
5V
WS2812B
DI
DO
C11
0.1uF
C12
0.1uF

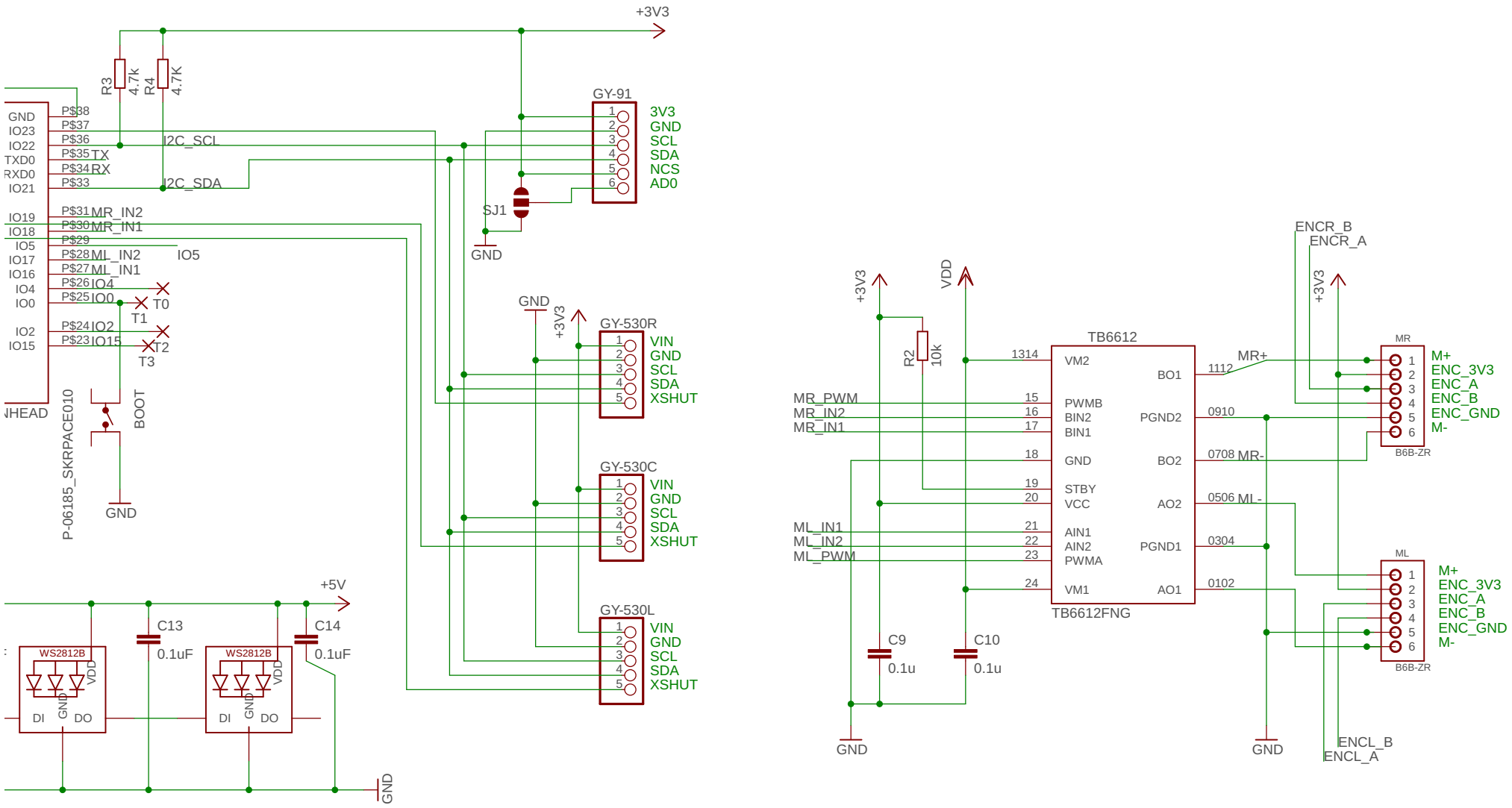
+3V3
R3
4.7k
R4
4.7K
GND
IO23
IO22
TXD0
RXD0
IO21
IO19
IO18
IO5
IO17
IO16
IO4
IO0
IO2
IO15
P$38
P$37
P$36
P$35 TX
P$34 RX
P$33
P$31 MR_IN2
P$30 MR_IN1
P$29
P$28 ML_IN2
P$27 ML_IN1
P$26 IO4
P$25 IO0
P$24 IO2
P$23 IO15
I2C_SCL
I2C_SDA
IO5
T0
T1
T2
T3
BOOT
GND
P-06185_SKRPACE010
GY-91
3V3
GND
SCL
SDA
NCS
AD0
SJ1
GND
GY-530R
VIN
GND
SCL
SDA
XSHUT
GY-530C
VIN
GND
SCL
SDA
XSHUT
GY-530L
VIN
GND
SCL
SDA
XSHUT
+5V
C13
0.1uF
C14
0.1uF
WS2812B
DI
DO
GND
VDD
GND
+3V3
VDD
R2
10k
TB6612
VM2
PWMB
BIN2
BIN1
GND
STBY
VCC
AIN1
AIN2
PWMA
VM1
BO1
PGND2
BO2
AO2
PGND1
AO1
TB6612FNG
MR_PWM
MR_IN2
MR_IN1
ML_IN1
ML_IN2
ML_PWM
C9
0.1u
C10
0.1u
GND
ENCR_B
ENCR_A
+3V3
MR+
MR-
ML -
MR
M+
ENC_3V3
ENC_A
ENC_B
ENC_GND
M-
B6B-ZR
ML
M+
ENC_3V3
ENC_A
ENC_B
ENC_GND
M-
B6B-ZR
GND
ENCL_B
ENCL_A