# Introduction

*Benoît Legat*

*Understand simple things deeply*

☐ Full Width Mode ☐ Present Mode

## Table of Contents

**Deepseek event**

**What do these libraries really do ?**

**Grading**

# Deepseek event

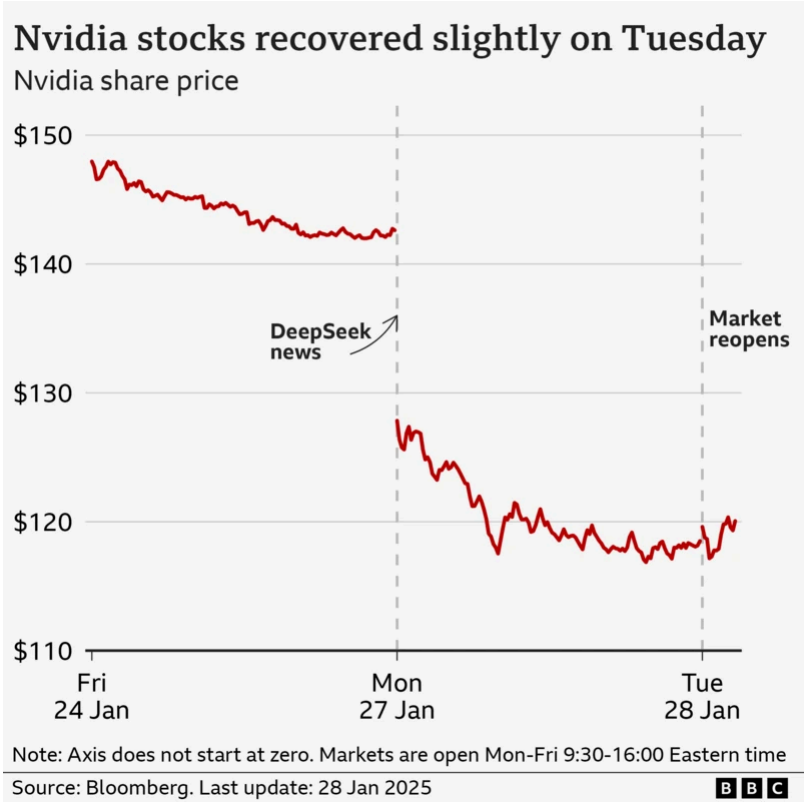


# Distillation

#### 2.3.1. *Cold Start*

Unlike DeepSeek-R1-Zero, to prevent the early unstable cold start phase of RL training from the base model, for DeepSeek-R1 we construct and collect a small amount of long CoT data to fine-tune the model as the initial RL actor. To collect such data, we have explored several approaches: using few-shot prompting with a long CoT as an example, directly prompting models to generate detailed answers with reflection and verification, gathering DeepSeek-R1-Zero outputs in a readable format, and refining the results through post-processing by human annotators.

In this work, we collect thousands of cold-start data to fine-tune the DeepSeek-V3-Base as the starting point for RL. Compared to DeepSeek-R1-Zero, the advantages of cold start data

| Model | AIME 2024 | | MATH-500 | GPQA Diamond | LiveCodeBench |
|---|---|---|---|---|---|
| | pass@1 | cons@64 | pass@1 | pass@1 | pass@1 |
| **QwQ-32B-Preview** | 50.0 | 60.0 | 90.6 | 54.5 | 41.9 |
| **DeepSeek-R1-Zero-Qwen-32B** | 47.0 | 60.0 | 91.6 | 55.0 | 40.2 |
| **DeepSeek-R1-Distill-Qwen-32B** | **72.6** | **83.3** | **94.3** | **62.1** | **57.2** |

Table 6 | Comparison of distilled and RL Models on Reasoning-Related Benchmarks.

# Low-level improvements

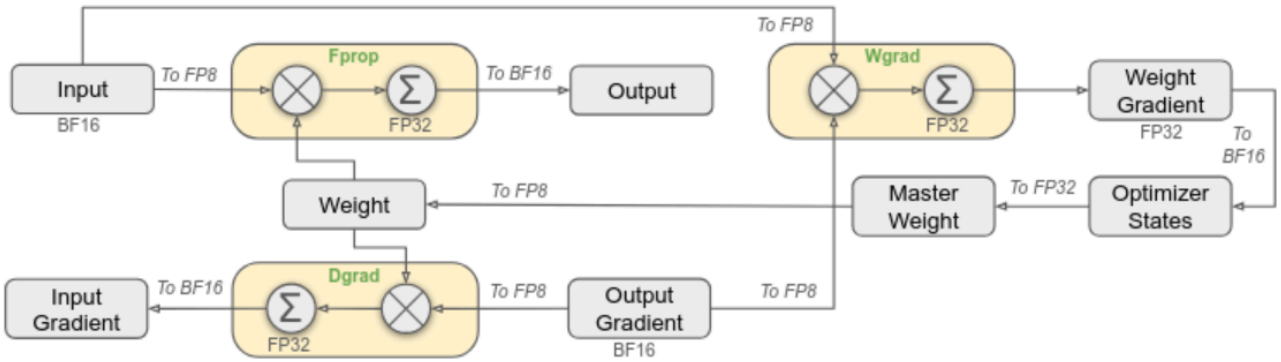


Figure 6 | The overall mixed precision framework with FP8 data format. For clarification, only the `Linear` operator is illustrated.

▶ **Is it worth developing such low-level improvements?**

# What do these libraries really do ?

PyTorch

TensorFlow

## Accelerated automatic differentation

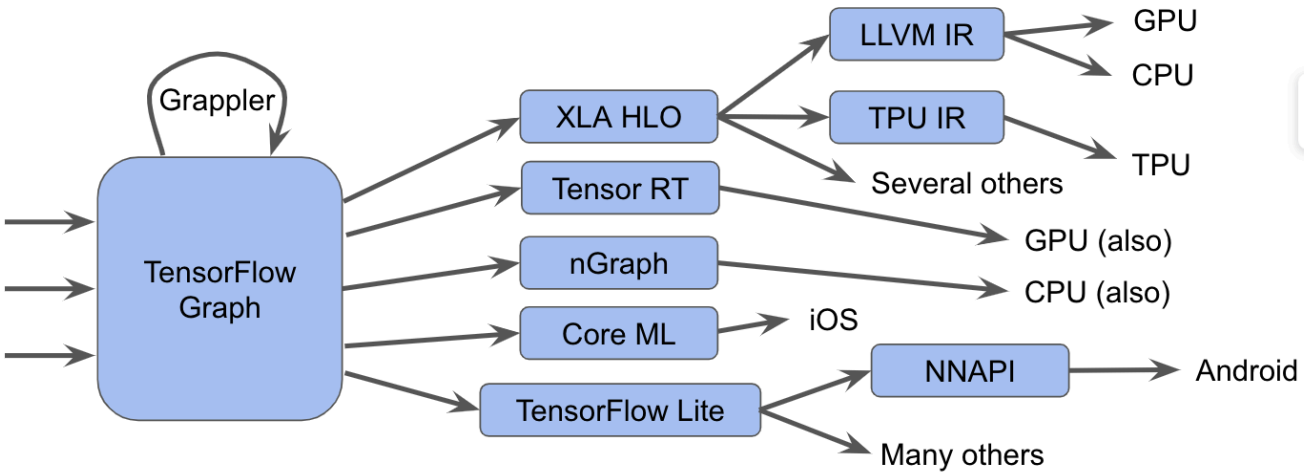

# MLIR

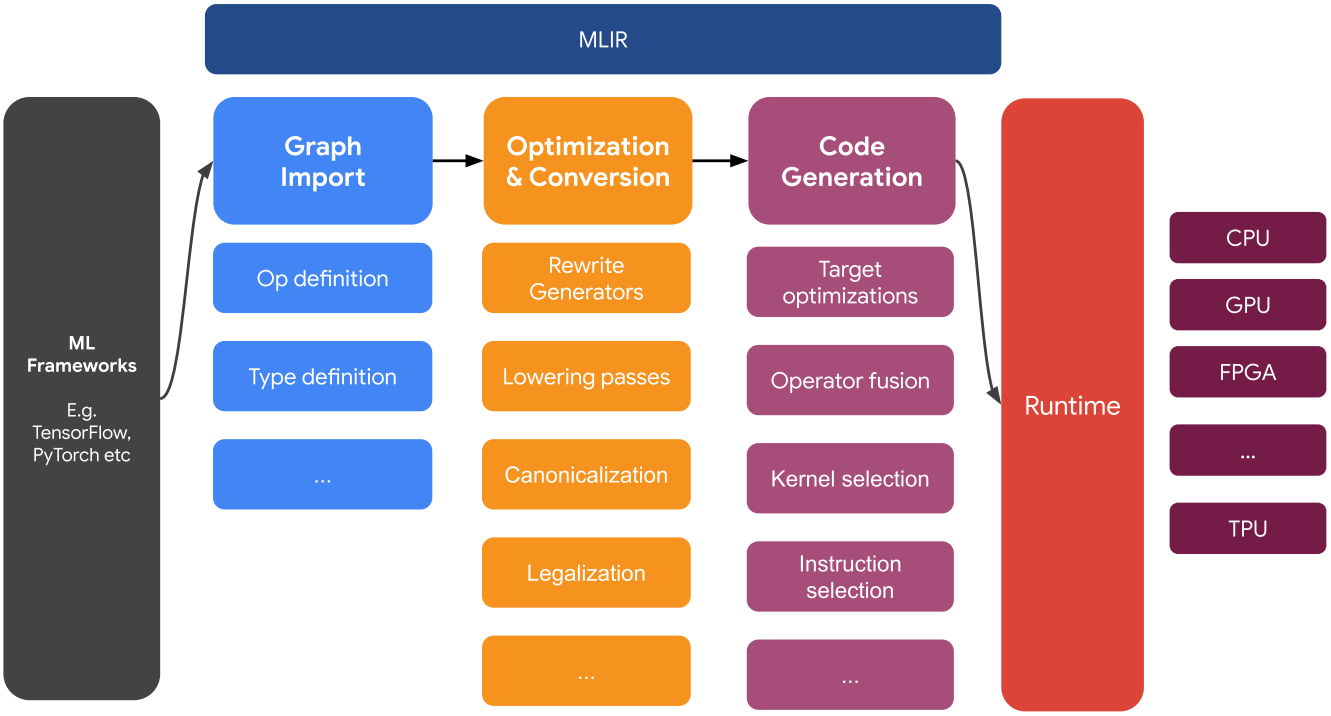


# DIY

The goal of the course it to take a tour of **automatic differentiation**. For this we will write our own from scratch, in julia.

**Yann LeCun**
@ylecun · **Follow**

Hotter take: ML would have advanced faster if another front-end language had been available and widely adopted instead of Python.
One that is interactive yet fast & compilable, multithreaded (no GIL), isn't bloated, doesn't care about white spaces,...
E.g. Julia or some Lisp.

> **Bojan Tunguz** @tunguz
> Hot take: Machine Learning would not have been nearly as advanced now were it not for Python. Python's two main virtues in the context of ML:
>
> 1. Lowering barriers to entry.
>
> 2. As a scripting language, it encourages and enables experimental workflow.

1:27 PM · Feb 22, 2023

**3.2K** **Reply** **Copy link**

**Read 296 replies**

# Grading

- If exam or homework is below 5, grade is the minimum of both
- If exam and homework are above 10, grade is the average of both
- Otherwise, we interpolate between these cases as follows
- Gain bonus points by contributing to the Git or winning benchmarks with the projects

```
f (generic function with 1 method)
```

```
f(x) = min(max(0, (x - 5)/10), 0.5)
```

```
g (generic function with 1 method)
```

```
g(a, b) = f(a) * b + (1 - f(a)) * a
```

```
grade (generic function with 1 method)
```

```
grade(HW, EX) = min(g(HW, EX), g(EX, HW))
```

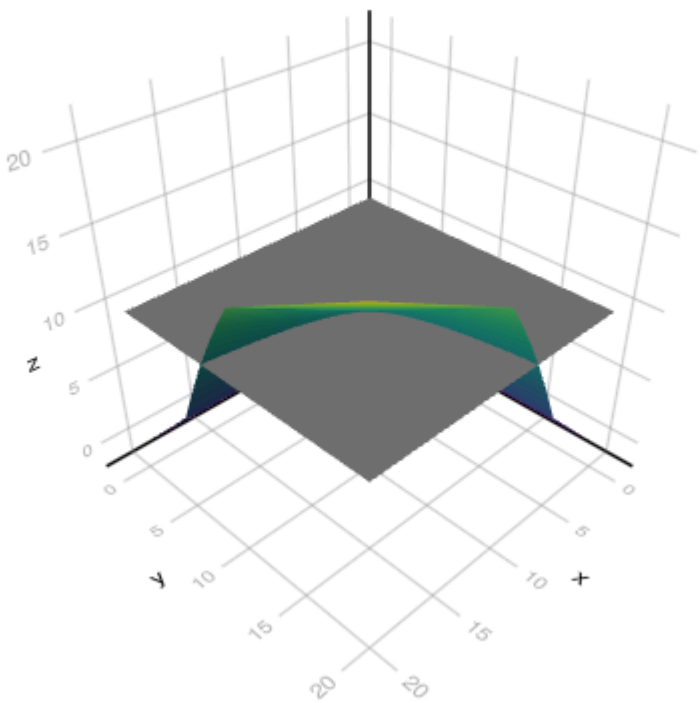

# The End

```julia
using Colors, WGLMakie
```

```julia
using Plots, PlutoUI, PlutoUI.ExperimentalLayout, HypertextLiteral; @htl, @htl_str
PlutoTeachingTools, ShortCodes
```

```
img (generic function with 3 methods)

qa (generic function with 2 methods)
```